STATE OF MAINE
DEPARTMENT OF TRANSPORTATION

SPECIFICATIONS

Design: Load and Resistance Factor Design per AASHTO LRFD Bridge Design Specifications, Sixth Edition 2012, with interim specifications through 2013.

DESIGN LOADING

Live Load ..... HL - 93 Modified

TRAFFIC DATA

Current (2013) AADT	1810
Future (2033) AADT	2170
DHV - % of AADT	14
Design Hour Volume	304
Heavy Trucks (% of AADT)	5
Heavy Trucks (% of DHV)	4
Directional Distribution (% of DHV)	60
18 kip Equivalent P 2.0	40
18 kip Equivalent P 2.5	38
Design Speed (mph)	30

HYDROLOGIC DATA

Drainage Area	0.19 sq mi
Design Discharge (Q50)	10.3 cfs
Check Discharge (Q100)	12.1 cfs
Mean Lower Low Water (MLLW)	-5.05 ft
Mean Low Water (MLW)	-4.79 ft
Mean Tide Level (MTL)	-0.21 ft
Mean High Water (MHW)	4.27 ft
Mean Higher High Water (MHHW)	4.89 ft
2012 Predicted High Tide	7.10 ft

MATERIALS

Concrete:
- Precast ..... Class "P"
- All Other ..... Class "A"

Reinforcing Steel ..... ASTM A 955, Grade 60 (See also Special Provision 709)
Welded Wire Reinforcement ..... ASTM A 1022(See also Special Provision 709)

BASIC DESIGN STRESSES

Concrete	f 'c = 4,350 psi
Precast Concrete	f 'c = 5,000 psi min.
Reinforcing Steel	f y = 60,000 psi
Welded Wire Reinforcement	f y = 65,000 psi min.

BIDDEFORD
YORK COUNTY
SNAKE RIVER BRIDGE
OVER
SNAKE RIVER
ROUTE 208
FEDERAL AID PROJECT NO. BH-1823(600)X
PROJECT LENGTH 0.035 mi.
BRIDGE NO. 3910

LIST OF DRAWINGS

Title Sheet	1
Quantities & Notes	2
General Plan & Profile	3
Boring Location Plan & Interpretive Subsurface Profile	4
Boring Logs	5
Highway Approach Cross - Sections	6-10
Box Culvert Details	11, 12
Detour Plan	13
Right of Way Map	14

UTILITIES

Central Maine Power Company
Kennebunk, Kennebunkport and Wells Water District

Fairpoint Communications
Time Warner Cable

MAINTENANCE OF TRAFFIC

Road will be closed for a period of time specified in the Special Provisions. Traffic will be detoured over local roads.

PROJECT LOCATION:	43°26'12.38" N 70°22'11.53" W On Bridge Rd. (Route 208) Approx. 100' NW of intersection of Fortunes Rocks Rd.
PROGRAM AREA:	Bridge
OUTLINE OF WORK:	Replacement of Snake River Bridge with Precast Concrete Box Culvert with precast wings. Reconstruct appox. 200' of approaches on Bridge Rd.

STATE OF MAINE
DEPARTMENT OF TRANSPORTATION
APPROVED
COMMISSIONER: DATE 7/16/13
CHIEF ENGINEER: DATE 7-15-13

STATE OF MAINE Nathaniel D. Benoit 10651 LICENSED PROFESSIONAL ENGINEER

SIGNATURE
P.E. NUMBER 10651
DATE 7/9/2013

PROJECT INFORMATION

PROGRAM	BRIDGE
PROJECT MANAGER	NATE BENOIT
DESIGNER	BRIAN NICHOLS
CONSULTANT	
PROJECT RESIDENT	
CONTRACTOR	
PROJECT COMPLETION DATE	

WIN 18236.00

BH-1823(600)X

BIDDEFORD
SNAKE RIVER BRIDGE

TITLE SHEET

SHEET NUMBER
1
OF 14

Filename:\00\bridge\msta\001_Title.dgn Division: BRIDGE Username: Brian.J.Nichols Date:7/9/2013

ESTIMATED QUANTITIES			
ITEM NO.	DESCRIPTION	QUANTITY	UNIT
202.19	REMOVING EXISTING BRIDGE (50 CY CONCRETE, 16,000 LBS STEEL)	1	LS
203.20	COMMON EXCAVATION	420	CY
203.2318	DISPOSAL OF SPECIAL WASTE	150	T
203.24	COMMON BORROW	10	CY
203.25	GRANULAR BORROW	120	CY
203.33	SPECIAL FILL	85	CY
206.07	STRUCTURAL ROCK EXCAVATION - DRAINAGE AND MIN. STRUCT.	65	CY
304.10	AGGREGATE SUBBASE COURSE - GRAVEL	440	CY
403.208	HOT MIX ASPHALT 12.5 MM HMA SURFACE	370	T
403.213	HOT MIX ASPHALT 12.5 MM BASE	90	T
409.15	BITUMINOUS TACK COAT - APPLIED	110	G
502.49	STRUCT CONCRETE CURBS & SIDEWALKS (5 CY)	1	LS
503.14	EPOXY COATED REINFORCING STEEL - FABRICATION & DELIVERY	510	LB
503.15	EPOXY COATED REINFORCING STEEL - PLACEMENT	510	LB
508.13	SHEET WATERPROOFING MEMBRANE (100 SY)	1	LS
511.07	COFFERDAM: UPSTREAM	1	LS
511.07	COFFERDAM: DOWNSTREAM	1	LS
526.301	TEMPORARY CONCRETE BARRIER TYPE I (60 LF)	1	LS
527.303	ENERGY ABSORBING SYSTEM (ET-PLUS)	2	EA
534.71	PRECAST CONCRETE BOX CULVERT (110 CY)	1	LS
605.09	6 INCH UNDERDRAIN TYPE B	42	LF
605.10	6 INCH UNDERDRAIN OUTLET	45	LF
606.23	GUARDRAIL TYPE 3C - SINGLE RAIL	200	LF
606.265	TERMINAL END - SINGLE RAIL - GALVANIZED STEEL	2	EA
606.353	REFLECTORIZED FLEXIBLE GUARDRAIL MARKER	8	EA
606.356	UNDERDRAIN DELINEATOR POST	1	EA
606.74	GUARDRAIL TYPE 3 - SINGLE RAIL BRIDGE MOUNTED	25	LF
609.31	CURB TYPE 3	74	LF
610.08	PLAIN RIPRAP	310	CY
613.319	EROSION CONTROL BLANKET	100	SY
615.07	LOAM	2	CY
618.1401	SEEDING METHOD NUMBER 2 - PLAN QUANTITY	1	UN
619.1201	MULCH - PLAN QUANTITY	1	UN
619.1401	EROSION CONTROL MIX	4	CY
620.58	EROSION CONTROL GEOTEXTILE	470	SY
627.733	4" WHITE OR YELLOW PAINTED PAVEMENT MARKING LINE	600	LF
629.05	HAND LABOR, STRAIGHT TIME	40	HR
631.12	ALL PURPOSE EXCAVATOR (INCLUDING OPERATOR)	20	HR
631.172	TRUCK - LARGE (INCLUDING OPERATOR)	20	HR
635.14	PREFABRICATED CONCRETE MODULAR GRAVITY WALL	250	SF
639.19	FIELD OFFICE TYPE B	1	EA
652.312	TYPE III BARRICADE	7	EA
652.33	DRUM	10	EA
652.34	CONE	10	EA
652.35	CONSTRUCTION SIGNS	300	SF
652.36	MAINTENANCE OF TRAFFIC CONTROL DEVICES	60	CD
652.38	FLAGGER	40	HR
656.75	TEMPORARY SOIL EROSION AND WATER POLLUTION CONTROL	1	LS
659.10	MOBILIZATION	1	LS

GENERAL CONSTRUCTION NOTES

1. During construction, the road will be closed to traffic for a time period specified in the Special Provisions.

2. For easements, construction limits and right of way lines, refer to Right of Way Map.

3. The clearing limits as shown on the plans are approximate. The exact limits will be established in the field by the Resident. Payment for clearing will be considered incidental to Contract items.

4. All utility facilities shall be adjusted by the respective utilities unless otherwise noted.

5. Do not excavate for Aggregate Subbase Course where existing material is suitable as determined by the Resident.

6. In areas where the Resident directs the Contractor not to excavate to the subgrade line shown on the plans, payment for removing existing pavement, grubbing, shaping, ditching, and compacting the existing subbase and layers of new subbase 6 inches or less thick will be made under appropriate equipment rental items.

7. All embankment material, except as otherwise shown, placed below EL. 4.3 shall be Granular Borrow meeting the requirements of Subsection 703.19, Material for Underwater Backfill.

8. Place loam 2 inches deep on all new or reconstructed sideslopes or as directed by the Resident.

9. Erosion Control Mix may be substituted in those areas normally receiving loam and seed as directed by the Resident. Placement shall be in accordance with Standard Specifications Section 619, Mulch. Payment will be made under Item No. 619.1401, Erosion Control Mix.

10. Place a 24-in. wide strip of Temporary Erosion Control Blanket on the sideslopes along the top of the riprap and behind the wingwalls.

11. Guardrail posts as shown in the Standard Details shall be modified from the indicated length of 6 feet to a length of 7 feet with an embedment of 4.5 feet. Payment will be considered incidental to the guardrail pay items.

12. An NCHRP350 compliant guardrail end treatment shall be installed concurrently with the placement of each section of beam guardrail.

13. Extended-use Erosion Control Blanket, seeded gutters, riprap downspouts, and other gutters lined with Stone Ditch Protection shall be constructed after paving and shoulder work is completed, where it is apparent that runoff will cause continual erosion. Payment will be made under the appropriate Contract items.

14. Protective Coating for Concrete Surfaces shall be applied to the following areas:

All exposed surfaces of concrete curbs

15. Payment for Protective Coating of Concrete Sufaces shall not be made directly but shall be considered incidental to 502.49, Structural Concrete Curbs & Sidewalks

16. Project information referred to below may be accessed at the following MaineDOT web address: http://www.maine.gov/mdot/contractors/*projecttbl .

17. The existing bridge plans may be accessed at the MaineDOT web address. The plans are reproductions of the original drawings as prepared for the construction of the bridge. It is very unlikely that the plans will show any construction field changes or any alterations which may have been made to the bridge during its life span.

18. The hydrologic report of the bridge site may be accessed at the MaineDOT web address. The hydrologic report is based on MaineDOT's interpretation of the information obtained for the subject site. No assurance is given that the information or the conclusions of the report will be representative of actual conditions at the time of construction.

19. The bridge deck evaluation report of the existing bridge may be accessed at the MaineDOT web address. The report contains visual inspection information and deck core data of the bridge. There is no assurance that the information or data is a true representation of the conditions of the entire deck.

20. The project geotechnical report titled: Geotechnical Design Report for the Replacement of Snake River Bridge, Soils Report No. 2013-04, February 1, 2013 may be accessed at the MaineDOT web address.

21. Geotechnical information furnished or referred to in this plan set is for the use of the Bidders and the Contractor. No assurance is given that the information or interpretations will be representative of actual subsurface conditions at the construction site. MaineDOT will not be responsible for the Bidders' or Contractor's interpretations of, or conclusions drawn from, the geotechnical information. The boring logs contained in the plan set present factual and interpretive subsurface information collected at discrete locations. Data provided may not be representative of the subsurface conditions between the boring locations.

22. Quantities included for pay items measured and paid for by Lump Sum are estimated quantities and are provided by MaineDOT for informational purposes only. Lump Sum pay items will be paid for at the Contract Bid amount, with no addition or reduction in payment to the Contractor if the actual final quantities are different from the MaineDOT provided estimated quantities, except as follows:

a. If a Lump Sum pay item is eliminated, the requirements of Standard Specifications Section 109.2, Elimination of Items, will take precedence.

b. If other Contract Documents specifically allow a change in payment for a Lump Sum pay item, those requirements will be followed.

c. If a design change results in changes to estimated quantities for Lump Sum pay items, price adjustments will be made in accordance with Standard Specifications Section 109.7, Equitable Adjustments to Compensation.

23. The Contractor shall submit a Bridge Demolition Plan to the Resident at least 10 business days prior to the start of demolition work. The plan shall outline the methods and equipment to be used to remove and dispose of all materials included in the existing bridge. No work related to the removal of the bridge shall be undertaken by the Contractor until MaineDOT has reviewed the Bridge Demolition Plan for appropriateness and completeness. Payment for all work necessary for developing, submitting and finalizing the Demolition Plan will be considered incidental to the bridge removal pay item.

24. The existing bridge shall be removed by and become the property of the Contractor. The steel portions of the existing bridge are coated with a lead-based paint system. The Contractor is responsible for the containment, proper management and disposal of all lead-contaminated hazardous waste generated by the process of demolishing the bridge. The Contractor is responsible for implementing appropriate OSHA mandated personal protection standards related to this process. Once the existing bridge is removed, the Contractor is solely responsible for the care, custody and control of the components of the existing bridge and any hazardous waste generated as a result of the storage, recycling or disposal of the bridge components, including lead-coated steel. The Contractor shall recycle or reuse the steel in accordance with the Maine Department of Environmental Protection's "Maine Hazardous Waste Management Regulations," Chapter 850. A copy of this regulation is available at MaineDOT's offices on Child Street in Augusta. Payment for all labor, materials, equipment and other costs required to remove and dispose of the existing bridge will be considered incidental to the bridge removal pay item.

25. All work and materials necessary for mainting the tidal exchange required in the Special Provisions will not be paid for directly but shall be considered incidental to the cofferdam items.

26. The Contractor shall minimize, to the maximum extent possible, the void spaces in the riprap aprons at both ends of the pipe. Dredge materials shall be spread between the layers of individual stones. Granular Borrow used to fill the void spaces shall not be paid for directly but shall be considered incidental to Item No. 610.08, Plain Riprap.

STATE OF MAINE
DEPARTMENT OF TRANSPORTATION

BH-1823(600)X

WIN 18236.00

BRIDGE NO. 3910

BRIDGE PLANS

		BY	DATE
PROJ. MANAGER	M. PARLIN		
DESIGN-DETAILED	BJN	BJN	
CHECKED-REVIEWED	----	ADN	MAY 2012
DESIGN2-DETAILED2	----	---	
DESIGN3-DETAILED3	----		
REVISIONS 1	----		
REVISIONS 2	----		
REVISIONS 3	----		
REVISIONS 4	----		
FIELD CHANGES	----		

SIGNATURE

P.E. NUMBER

DATE

SNAKE RIVER BRIDGE
SNAKE RIVER
BIDDEFORD YORK COUNTY

ESTIMATED QUANTITIES

SHEET NUMBER

2

OF 14

Filename: ...\BRIDGE\MSTA\002_Estimate.dgn Division: BRIDGE Username: Brian.J.Nichols Date:7/29/2013

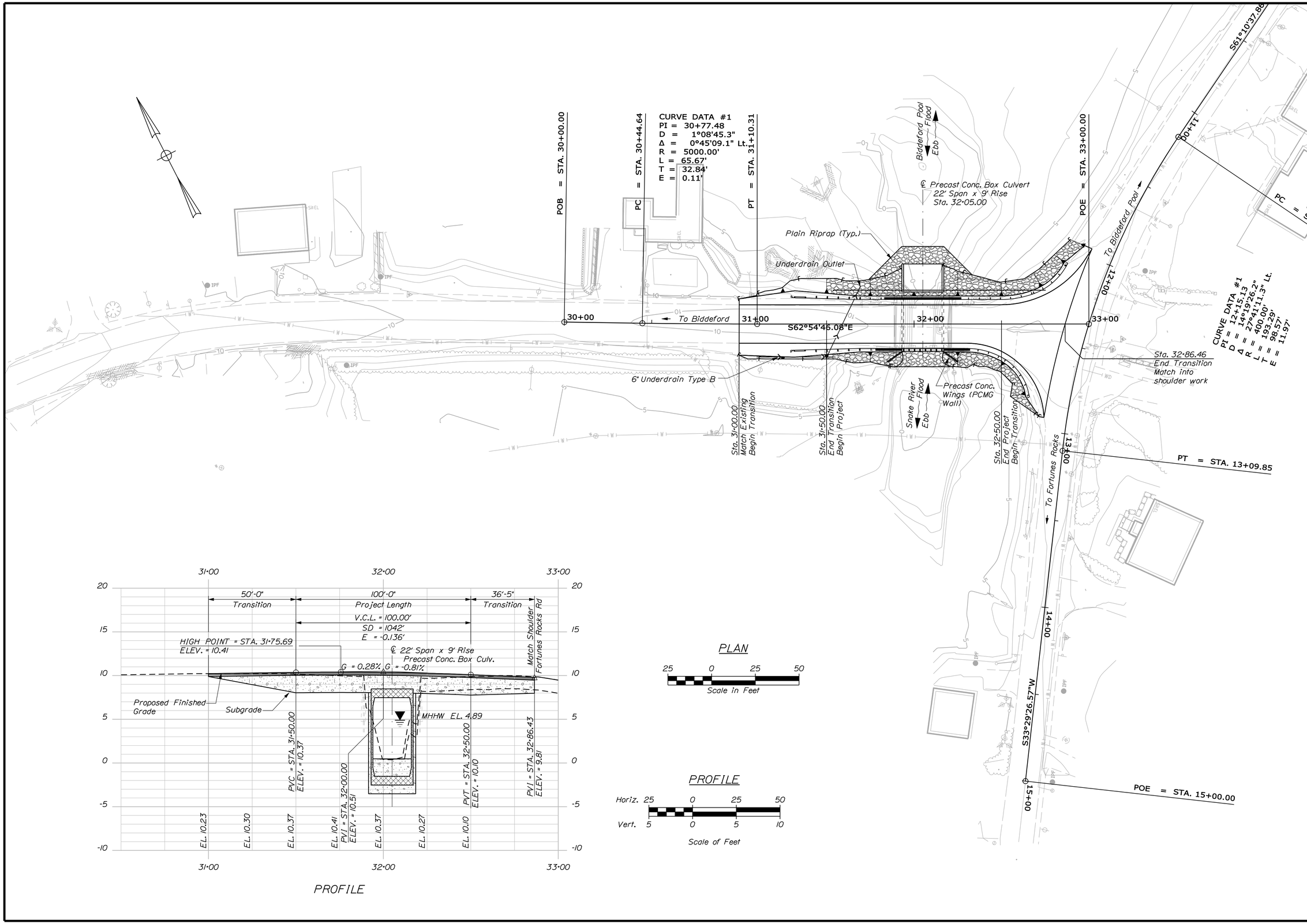

STATE OF MAINE
DEPARTMENT OF TRANSPORTATION

BH-1823(600)X

WIN 18236.00

BRIDGE NO. 3910

BRIDGE PLANS

PROJ. MANAGER	M. P-ARLIN	BY	DATE
DESIGN-DETAILED	BJN	BJN	------
CHECKED-REVIEWED	------	ADN	MAY 2012
DESIGN2-DETAILED2	------	---	------
DESIGN3-DETAILED3	------	------	------
REVISIONS 1	------	------	------
REVISIONS 2	------	------	------
REVISIONS 3	------	------	------
REVISIONS 4	------	------	------
FIELD CHANGES	------	------	------

SIGNATURE

P.E. NUMBER

DATE

SNAKE RIVER BRIDGE
SNAKE RIVER
BIDDEFORD YORK COUNTY

GENERAL PLAN & PROFILE

SHEET NUMBER

3

OF 14

Filename: ...\00\bridge\vmsto\003_BDPlan.dgn Division: BRIDGE Username: Brian.J.Nichols Date:7/9/2013

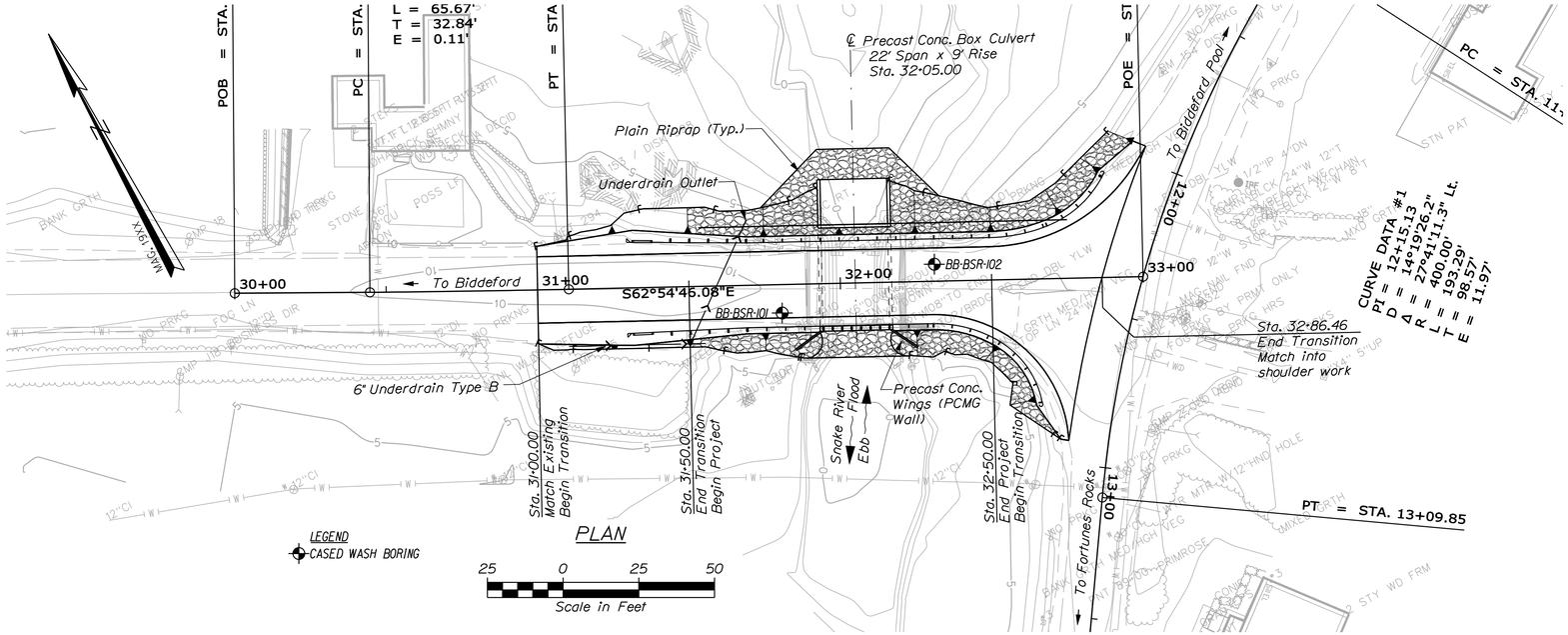

PLAN

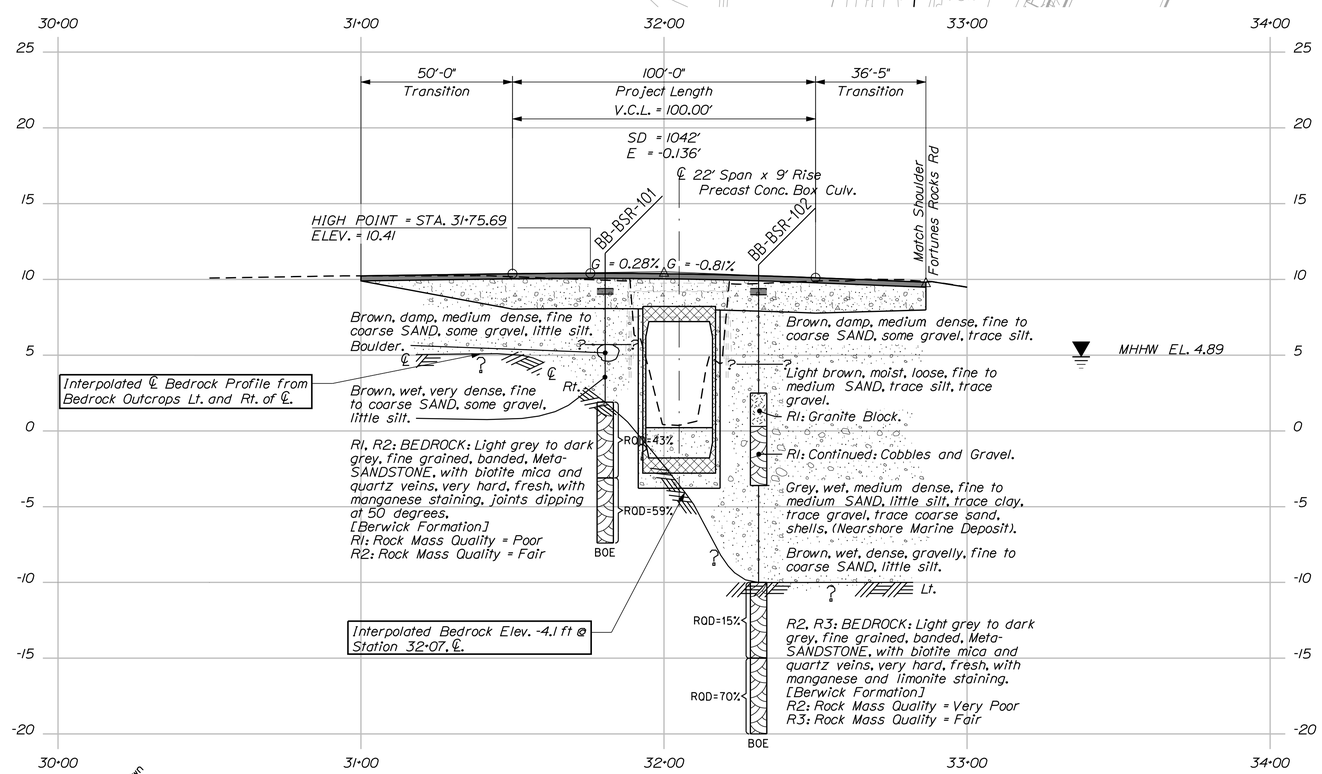

PROFILE

LEGEND

Boring No. Offset, ft shown

Pavement Thickness if applicable

Strata Interface

Boring

RQD= Rock Quality Designation for Rock Core Sample

BOE= Bottom Of Exploration

HORIZ 25 0 25 50

VERT 5 0 5 10

SCALE

Note: This generalized interpretive soil profile is intended to convey trends in subsurface conditions. The boundaries between strata are approximate and idealized, and have been developed by interpretations of widely spaced explorations and samples. Actual soil transitions may vary and are probably more erratic. For more specific information refer to the exploration logs.

STATE OF MAINE
DEPARTMENT OF TRANSPORTATION

BH-1823(600)X

WIN 18236.00

BRIDGE NO. 3910

BRIDGE PLANS

		BY	DATE
PROJ. MANAGER	M. PARLIN		
DESIGN-DETAILED	R. MADUS	B. NICHOLS	
CHECKED-REVIEWED	-----	-----	
DESIGN2-DETAILED2	K.MAGUIRE	T.WHITE	JAN 2013
DESIGN3-DETAILED3	-----	-----	-----
REVISIONS 1	-----	-----	-----
REVISIONS 2	-----	-----	-----
REVISIONS 3	-----	-----	-----
REVISIONS 4	-----	-----	-----
FIELD CHANGES	-----	-----	-----

SIGNATURE

P.E. NUMBER

DATE

SNAKE RIVER BRIDGE
SNAKE RIVER
BIDDEFORD CUMBERLAND COUNTY

BORING LOCATION PLAN &
INTERPRETIVE SUBSURFACE PROFILE

SHEET NUMBER

4

OF 14

Filename: ...\GEOTECH\MSTA\004_BLP&SP1.dgn Division: BRIDGE Username: Brian.J.Nichols Date:7/9/2013

Filename: ...\MSTA\005_BORING LOGS1.dgn Division: BRIDGE Username: Brian.J.Nichols Date:7/9/2013

Maine Department of Transportation
Soil/Rock Exploration Log
US CUSTOMARY UNITS

Project: Snake River Bridge #3910 carries Route 208 over Snake River
Location: Biddeford, Maine

Boring No.: BB-BSR-101
WIN: 18236.00

Driller:	MaineDOT	Elevation (ft.)	9.4	Auger ID/OD:	5" Solid Stem
Operator:	Giguere/Giles/Doggett	Datum:	NAVD88	Sampler:	Standard Split Spoon
Logged By:	B. Wilder	Rig Type:	CME 45C	Hammer Wt./Fall:	140#/30"
Date Start/Finish:	4/26/12; 07:15-10:00	Drilling Method:	Cased Wash Boring	Core Barrel:	NQ-2*
Boring Location:	31+80.6, 9.4 ft RT.	Casing ID/OD:	HW & NW	Water Level*:	5.0 ft bgs.
Hammer Efficiency Factor:	0.84	Hammer Type:	Automatic ☒ Hydraulic ☐	Rope & Cathead ☐	

Definitions:
D = Split Spoon Sample
MD = Unsuccessful Split Spoon Sample attempt
U = Thin Wall Tube Sample
MU = Unsuccessful Thin Wall Tube Sample attempt
V = Insitu Vane Shear Test, MV = Unsuccessful Insitu Vane Shear Test attempt
R = Rock Core Sample
SSA = Solid Stem Auger
HSA = Hollow Stem Auger
RC = Roller Cone
WOH = weight of 140lb. hammer
WOR/C = weight of rods or casing
WO1P = Weight of one person
S_u = Insitu Field Vane Shear Strength (psf)
q_p = Pocket Torvane Shear Strength (psf)
q_u = Unconfined Compressive Strength (ksf)
N-uncorrected = Raw field SPT N-value
Hammer Efficiency Factor = Annual Calibration Value
N_{60} = SPT N-uncorrected corrected for hammer efficiency
N_{60} = (Hammer Efficiency Factor/60%)*N-uncorrected
$S_{u(lab)}$ = Lab Vane Shear Strength (psf)
WC = water content, percent
LL = Liquid Limit
PL = Plastic Limit
PI = Plasticity Index
G = Grain Size Analysis
C = Consolidation Test

Depth (ft.)	Sample No.	Pen./Rec. (in.)	Sample Depth (ft.)	Blows (/6 in.) Shear Strength (psf) Qp (TSF)	N-uncorrected	N_{60}	Casing Blows	Elevation (ft.)	Visual Description and Remarks	Laboratory Testing Results/ AASHTO and Unified Class.
0							SSA	9.03	4.5" Pavement — 0.38	
	1D	24/15	1.00 - 3.00	8/10/10/11	20	28			Brown, damp, medium dense, fine to coarse SAND, some gravel, little silt. — 3.70	GM175849 A-1-b, SW-SM WC=3.5%
							16	5.70	Boulder from 3.7-4.8 ft bgs. Set in NW Casing, roller cones ahead with 3 and 7/8" roller cones to 6.4 ft bgs. — 4.80	
5							12	4.60	Change to NW casing at 5.0 ft bgs.	
							20		R30 blows for 0.4 ft.	
	2D	12/6	6.40 - 7.40	5/50	---		R30		Brown, wet, very dense, fine to coarse SAND, some gravel, little silt.	
	R1	60/60	7.50 - 12.50	RQD = 43%			NQ-2	1.90	Roller Coned ahead to 7.5 ft bgs. — 7.50	
10									Top of Bedrock at Elev. 1.9 ft. R1:Bedrock:Light grey to dark grey, fine grained-banded, Meta-SANDSTONE, with biotite mica and quartz veins, very hard, fresh, with manganese stainings, joints dipping at 50 degrees. (Berwick Formation). Rock Mass Quality = Poor. R1:Core Times (min:sec) 7.5-8.5 ft (2:35) 8.5-9.5 ft (3:05) 9.5-10.5 ft (3:15) 10.5-11.5 ft (2:30) 11.5-12.5 ft (2:40) 100% Recovery R2:Bedrock: Similar to above. Rock Mass Quality = Fair. R2:Core Times (min:sec) 12.5-13.5 ft (2:25) 13.5-14.5 ft (2:00) 14.5-15.5 ft (2:25) No water return. 15.5-16.5 ft (2:20) 16.5-16.8 ft (2:00) 100% Recovery Core Blocked	
	R2	51.6/ 51.6	12.50 - 16.80	RQD = 59%						
15								-7.40	— 16.80	
20									Bottom of Exploration at 16.80 feet below ground surface.	

Remarks:
500# down pressure on Core Barrel.

Stratification lines represent approximate boundaries between soil types; transitions may be gradual.

* Water level readings have been made at times and under conditions stated. Groundwater fluctuations may occur due to conditions other than those present at the time measurements were made.

Page 1 of 1
Boring No.: BB-BSR-101

Maine Department of Transportation
Soil/Rock Exploration Log
US CUSTOMARY UNITS

Project: Snake River Bridge #3910 carries Route 208 over Snake River
Location: Biddeford, Maine

Boring No.: BB-BSR-102
WIN: 18236.00

Driller:	MaineDOT	Elevation (ft.)	9.4	Auger ID/OD:	5" Solid Stem
Operator:	Giguere/Giles/Doggett	Datum:	NAVD88	Sampler:	Standard Split Spoon
Logged By:	B. Wilder	Rig Type:	CME 45C	Hammer Wt./Fall:	140#/30"
Date Start/Finish:	4/26/12; 10:00-13:30	Drilling Method:	Cased Wash Boring	Core Barrel:	NQ-2*
Boring Location:	32+31.2, 5.6 ft Lt.	Casing ID/OD:	HW & NW	Water Level*:	4.0 ft bgs.
Hammer Efficiency Factor:	0.84	Hammer Type:	Automatic ☒ Hydraulic ☐	Rope & Cathead ☐	

Definitions:
D = Split Spoon Sample
MD = Unsuccessful Split Spoon Sample attempt
U = Thin Wall Tube Sample
MU = Unsuccessful Thin Wall Tube Sample attempt
V = Insitu Vane Shear Test, MV = Unsuccessful Insitu Vane Shear Test attempt
R = Rock Core Sample
SSA = Solid Stem Auger
HSA = Hollow Stem Auger
RC = Roller Cone
WOH = weight of 140lb. hammer
WOR/C = weight of rods or casing
WO1P = Weight of one person
S_u = Insitu Field Vane Shear Strength (psf)
q_p = Pocket Torvane Shear Strength (psf)
q_u = Unconfined Compressive Strength (ksf)
N-uncorrected = Raw field SPT N-value
Hammer Efficiency Factor = Annual Calibration Value
N_{60} = SPT N-uncorrected corrected for hammer efficiency
N_{60} = (Hammer Efficiency Factor/60%)*N-uncorrected
$S_{u(lab)}$ = Lab Vane Shear Strength (psf)
WC = water content, percent
LL = Liquid Limit
PL = Plastic Limit
PI = Plasticity Index
G = Grain Size Analysis
C = Consolidation Test

Depth (ft.)	Sample No.	Pen./Rec. (in.)	Sample Depth (ft.)	Blows (/6 in.) Shear Strength (psf) Qp (TSF) or RQD (%)	N-uncorrected	N_{60}	Casing Blows	Elevation (ft.)	Visual Description and Remarks	Laboratory Testing Results/ AASHTO and Unified Class.
0							SSA	8.98	5" Pavement — 0.42	
	1D	24/17	1.00 - 3.00	10/7/6/6	13	18			Brown, damp, medium dense, fine to coarse SAND, some gravel, trace silt. — 5.00	GM175850 A-1-b, SW-SM WC=4.5%
5	2D	22.8/18	5.00 - 6.90	2/2/4/30	6	8		4.40	Light brown, moist, loose, fine to medium SAND, trace coarse sand, trace silt, trace gravel. — 6.90	GM175426 A-3, SP WC=10.2%
	R1	73.2/26	6.90 - 13.00				NQ-2	2.50	Granite Block, boulder from 6.9-9.1 ft bgs. Core Barrel to 13.0 ft bgs, then set in NW Casing to 6.9 ft bgs. — 9.10	
							6	0.30	Cobbles and Gravel from 9.1-13.0 ft bgs.	
10							8			
							35		Roller Coned thru block then dropped in NW Casing at 12.0 ft bgs. — 13.00	
							50			
							37			
	3D	24/17	13.00 - 15.00	2/3/8/8	11	15	36	-3.60	Grey, wet, medium dense, fine to medium SAND, little silt, trace clay, trace gravel, trace coarse sand-shells. (Nearshore Marine Deposit). — 18.00	GM175427 A-2-4, SC-SM WC=23.0%
15							38			
							49			
							72			
							64	-8.60		
	4D	10.8/6	18.50 - 19.40	6/40(4.8")	---		19		Brown, wet, dense, gravelly, fine to coarse SAND. (Glacial Till) R50 Blows for 0.4 ft. — 19.40	
	R2	60/60	19.40 - 24.40	RQD = 15%			R50 NQ-2	-10.00	Top of Bedrock at Elev. -10.0 ft. R2:Bedrock:Light grey to dark grey, fine grained-banded, Meta-SANDSTONE, with biotite mica and quartz veins very hard, fresh, with manganese and limonite staining, joints dipping at 50 degrees. (Berwick Formation). Rock Mass Quality = Very Poor. R2:Core Times (min:sec) 19.4-20.4 ft (2:05) 20.4-21.4 ft (2:10) 21.4-22.4 ft (2:10) 22.4-23.4 ft (2:20) 23.4-24.4 ft (3:00) 100% Recovery R3:Bedrock: Similar to above. Rock Mass Quality = Fair. R3:Core Times (min:sec) 24.4-25.4 ft (2:00) 25.4-26.4 ft (2:45) 26.4-27.4 ft (2:45) 27.4-28.4 ft (2:30) 28.4-29.4 ft (2:50) 100% Recovery	
20										
	R3	60/60	24.40 - 29.40	RQD = 70%						
25										
30								-20.00		
35										
40										
45										
50									Bottom of Exploration at 29.40 feet below ground surface. — 29.40	

Remarks:
500# down pressure on Core Barrel.

Stratification lines represent approximate boundaries between soil types; transitions may be gradual.

* Water level readings have been made at times and under conditions stated. Groundwater fluctuations may occur due to conditions other than those present at the time measurements were made.

Page 1 of 1
Boring No.: BB-BSR-102

STATE OF MAINE
DEPARTMENT OF TRANSPORTATION

BH-1823(600)X

WIN 18236.00

BRIDGE NO. 3910 — BRIDGE PLANS

		BY	DATE
PROJ. MANAGER	M. P-ARLIN		
DESIGN-DETAILED	R. NAOUS	B. NICHOLS	
CHECKED-REVIEWED			SIGNATURE
DESIGN2-DETAILED2	K.MAGUIRE	T.WHITE	FEB 2013
DESIGN3-DETAILED3			P.E. NUMBER
REVISIONS 1			
REVISIONS 2			DATE
REVISIONS 3			
REVISIONS 4			
FIELD CHANGES			

SNAKE RIVER BRIDGE
SNAKE RIVER
BIDDEFORD CUMBERLAND COUNTY

BORING LOGS

SHEET NUMBER
5
OF 14

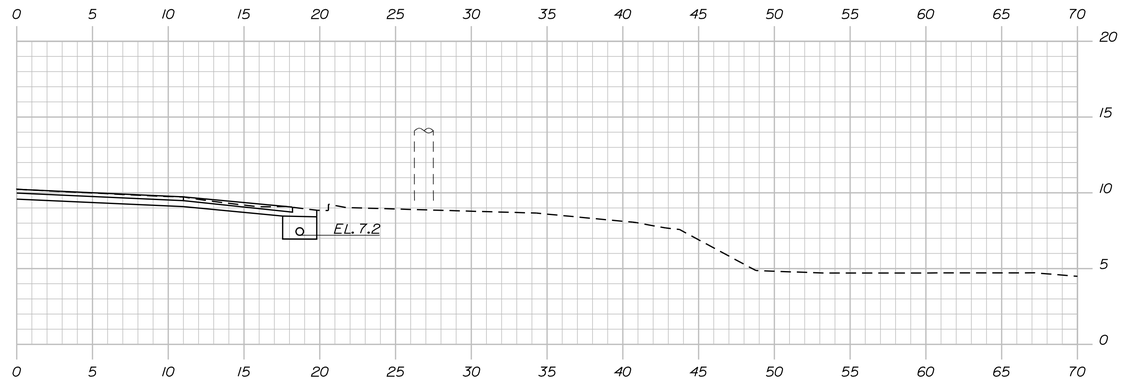

31+10.3

Sta. 31+10.3 to Sta. 31+49.0, 19' R
Install 6" Underdrain Type B

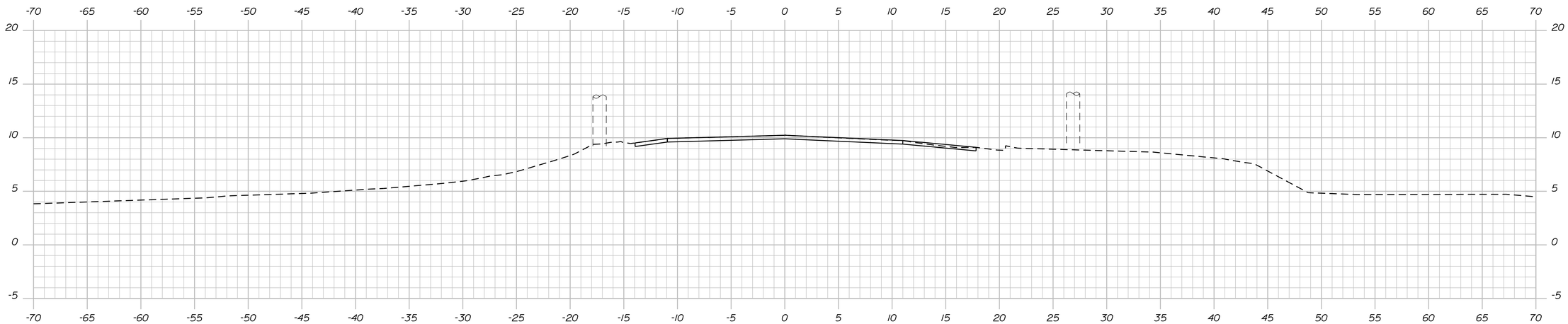

31+00.00

MATCH EXISTING
BEGIN TRANSITION

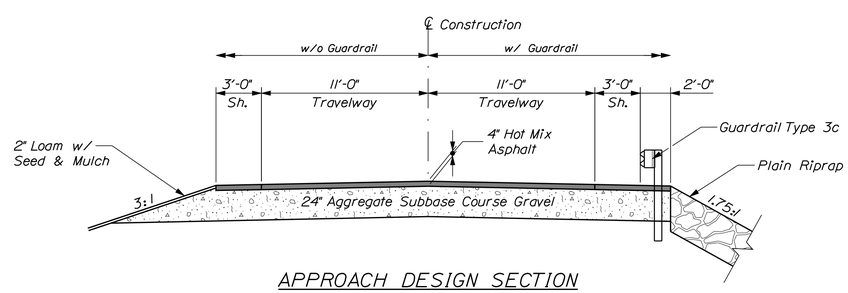

APPROACH DESIGN SECTION

STATE OF MAINE
DEPARTMENT OF TRANSPORTATION

BH-1823(600)X

WIN 18236.00

BRIDGE NO. 3910

BRIDGE PLANS

	BY	DATE
M. PARLIN		
DESIGN-DETAILED	BJN	
CHECKED-REVIEWED	ADN	MAY 2012
DESIGN2-DETAILED2		
DESIGN3-DETAILED3		
REVISIONS 1		
REVISIONS 2		
REVISIONS 3		
REVISIONS 4		
FIELD CHANGES		

SIGNATURE

P.E. NUMBER

DATE

SNAKE RIVER BRIDGE
SNAKE RIVER
BIDDEFORD YORK COUNTY

CROSS SECTIONS

SHEET NUMBER

6

OF 14

Filename: ...\MSTA\006_Xsect_31+00_001.dgn Division: BRIDGE Username: Brian.J.Nichols Date:7/9/2013

Sta. 31+00.00 to Sta. 31+10.00

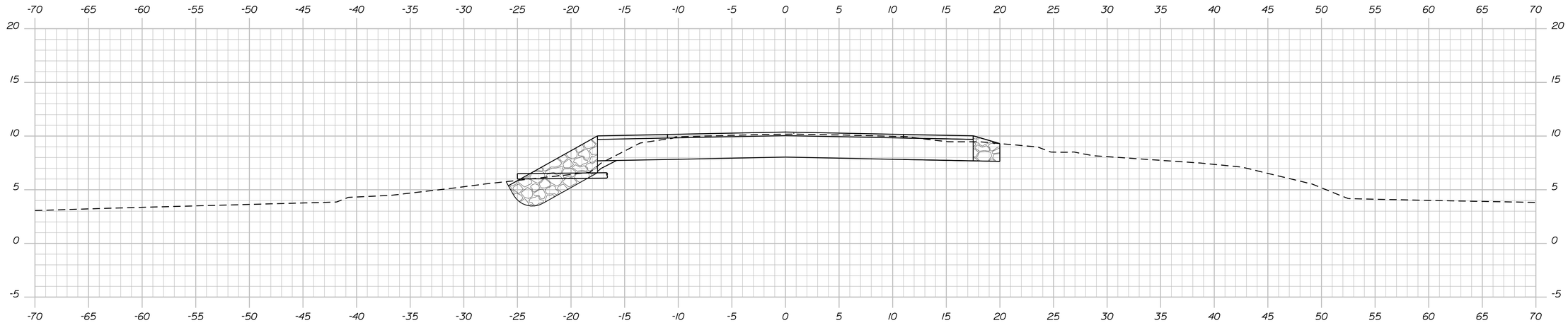

Sta. 31+69.4, 21.7' L
Underdrain Outlet, Type B
EL. 6.0
Install Underdrain Outlet
Delineator Post

Sta. 31+69.2 to Sta. 32+87.3
Install 125' Guardrail Type3c

31+50.00
End Transition
Begin Project

Sta. 31+69.1 to Bridge
Install 25' Guardrail Type3c

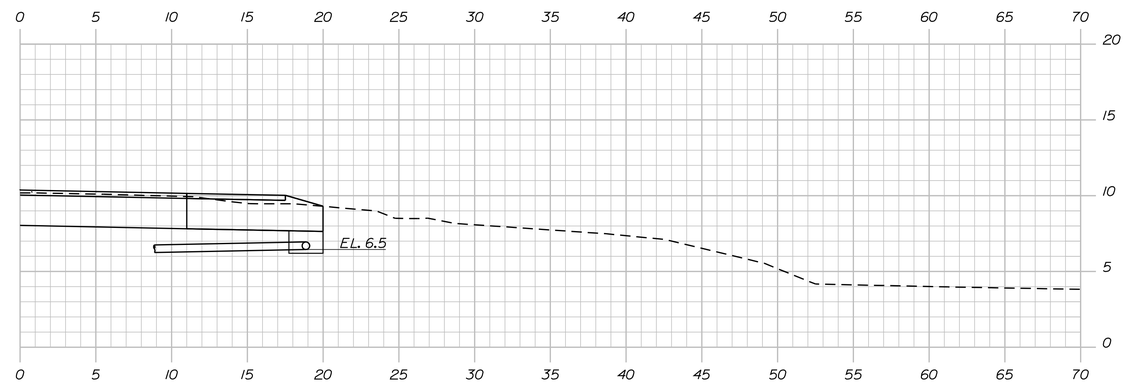

Sta. 31+49.0, 19' R
Underdrain 45° elbow, Type B
EL. 4.2

31+49.0

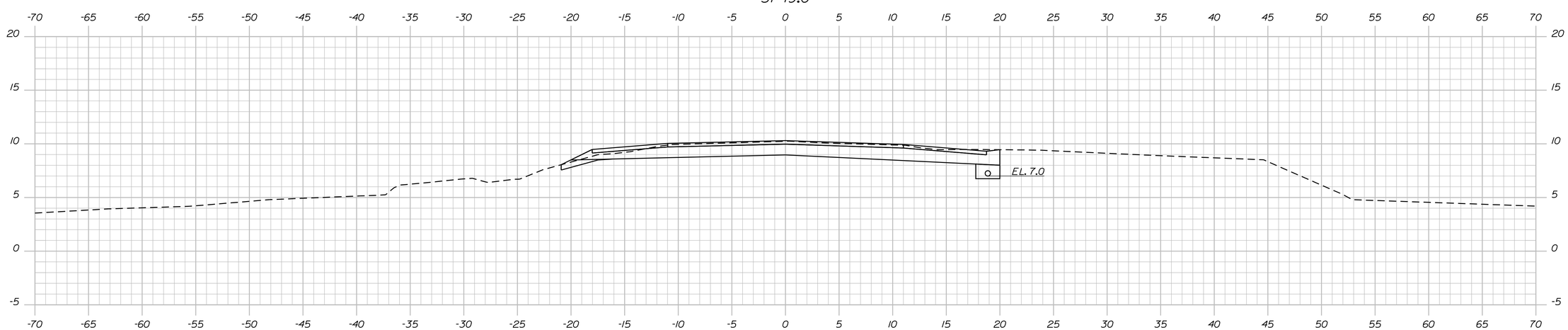

Sta. 31+31.7 to Sta. 31+69.2
Install ET-Plus 37.5'
Install Reflective Flexible Guardrail Markers (2)

31+25.00

Sta. 31+31.5 to Sta. 31+69.1
Install ET-Plus 37.5'
Install Reflective Flexible Guardrail Markers (2)

STATE OF MAINE
DEPARTMENT OF TRANSPORTATION

BH-1823(600)X

WIN
18236.00

BRIDGE NO. 3910

BRIDGE PLANS

	BY	DATE
PROJ. MANAGER	M. PARLIN	
DESIGN-DETAILED	BJN	
CHECKED-REVIEWED	ADN	MAY 2012
DESIGN2-DETAILED2		
DESIGN3-DETAILED3		
REVISIONS 1		
REVISIONS 2		
REVISIONS 3		
REVISIONS 4		
FIELD CHANGES		

SIGNATURE

P.E. NUMBER

DATE

SNAKE RIVER BRIDGE
SNAKE RIVER
BIDDEFORD YORK COUNTY

CROSS SECTIONS

SHEET NUMBER
7
OF 14

Filename: ...\MSTA\007_Xsect_31+25_002.dgn Division: BRIDGE Username: Brian.J.Nichols Date:7/9/2013

Sta. 31+25.00 to Sta. 31+50.00

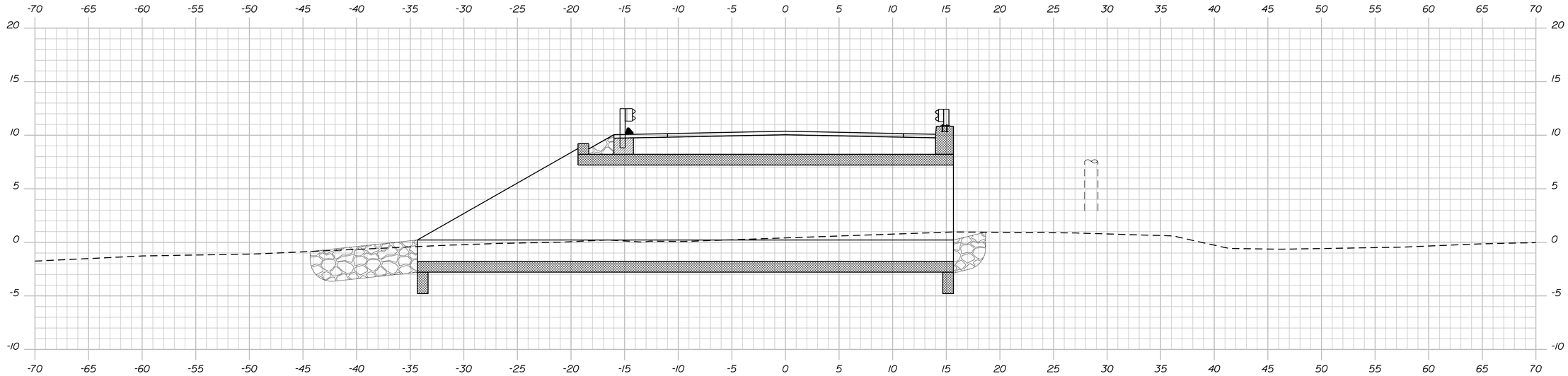

32+00.00
BRIDGE

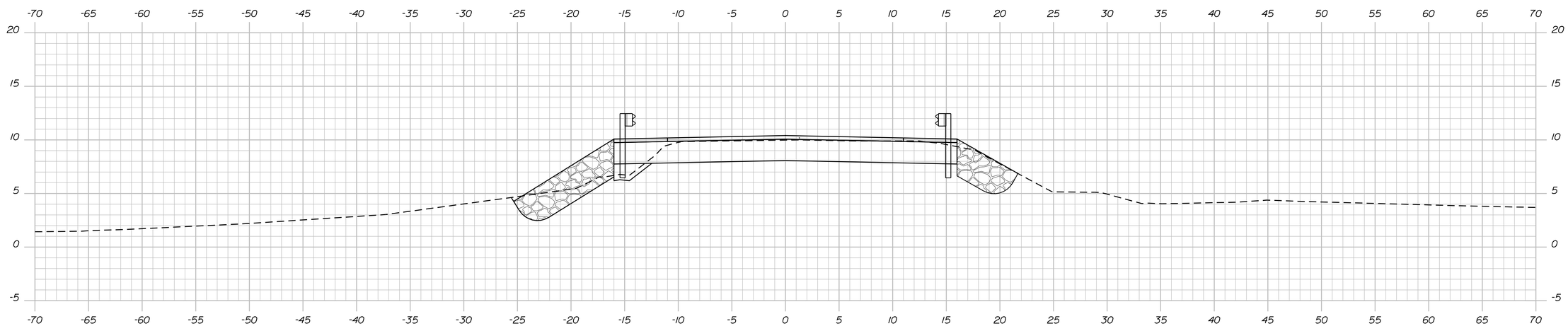

Sta. 31+83 Lt. to Sta. 32+27 Lt.
Install 44' Type 3 Curb, Mold 2

31+75.00

Sta. 31+78 Rt. to Bridge
Install 15' Type 3 Curb, Mold 2

STATE OF MAINE
DEPARTMENT OF TRANSPORTATION

BH-1823(600)X

WIN
18236.00

BRIDGE NO. 3910

BRIDGE PLANS

PROJ. MANAGER	M. PARLIN		
DESIGN-DETAILED	BJN	BJN	
CHECKED-REVIEWED	----	ADN	MAY 2012
DESIGN2-DETAILED2	------	---	------
DESIGN3-DETAILED3	------	------	------
REVISIONS 1	------	------	------
REVISIONS 2	------	------	------
REVISIONS 3	------	------	------
REVISIONS 4	------	------	------
FIELD CHANGES	------	------	------

SIGNATURE

P.E. NUMBER

DATE

SNAKE RIVER BRIDGE
SNAKE RIVER
BIDDEFORD YORK COUNTY

CROSS SECTIONS

SHEET NUMBER

8

OF 14

Sta. 31+75.00 to Sta. 32+00.00

Filename: ...\MSTA\008_Xsect_31+75_003.dgn Division: BRIDGE Username: Brian.J.Nichols Date:7/9/2013

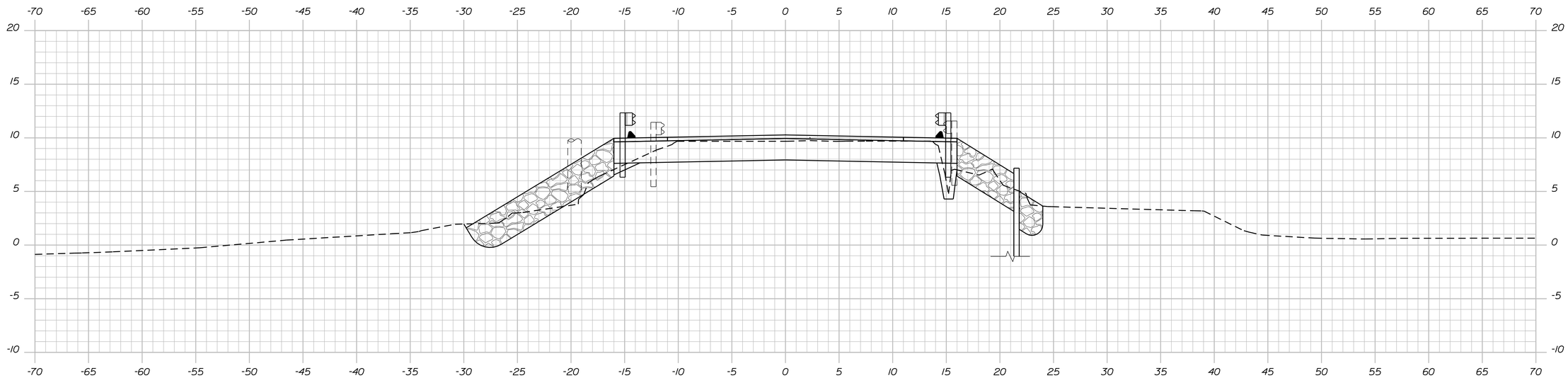

32+25.00

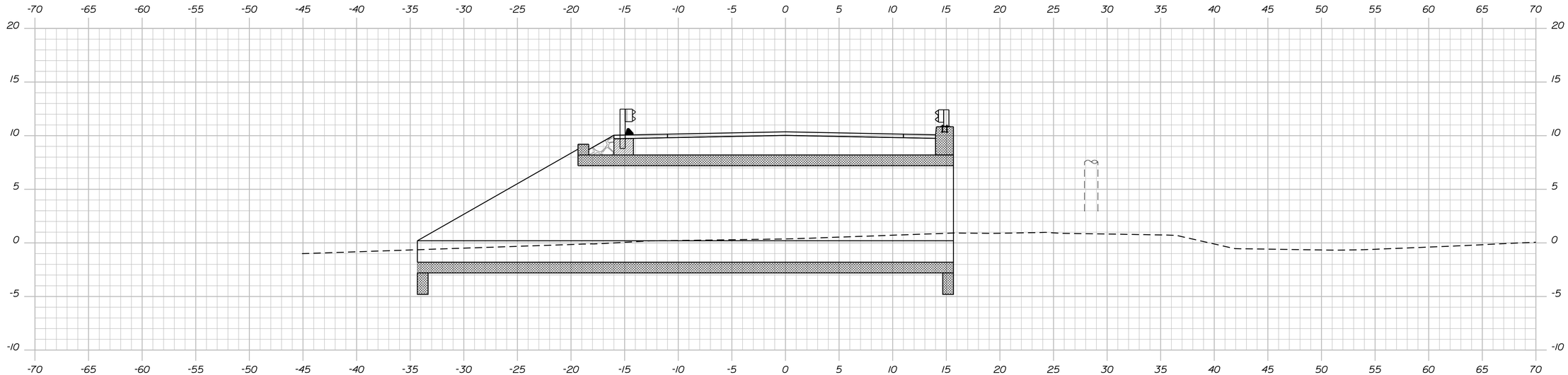

32+05.00
BRIDGE

Bridge to Sta. 32+65.8
Install 50' Guardrail Type 3c

Bridge to Sta. 32+32 Rt.
Install 15' Type 3 Curb, Mold 2

STATE OF MAINE
DEPARTMENT OF TRANSPORTATION

BH-1823(600)X

WIN 18236.00

BRIDGE NO. 3910

BRIDGE PLANS

PROJ. MANAGER	M. P-ARLIN		
DESIGN-DETAILED	BJN	BJN	
CHECKED-REVIEWED	----	ADN	MAY 2012
DESIGN2-DETAILED2	------	---	------
DESIGN3-DETAILED3	------	------	------
REVISIONS 1	------	------	------
REVISIONS 2	------	------	------
REVISIONS 3	------	------	------
REVISIONS 4	------	------	------
FIELD CHANGES	------	------	------

SIGNATURE

P.E. NUMBER

DATE

SNAKE RIVER BRIDGE
SNAKE RIVER
BIDDEFORD YORK COUNTY

CROSS SECTIONS

SHEET NUMBER

9

OF 14

Filename: ...\MSTA\009_Xsect_32+05_004.dgn Division: BRIDGE Username: Brian.J.Nichols Date:7/9/2013

Sta. 32+05.00 to Sta. 32+25.00

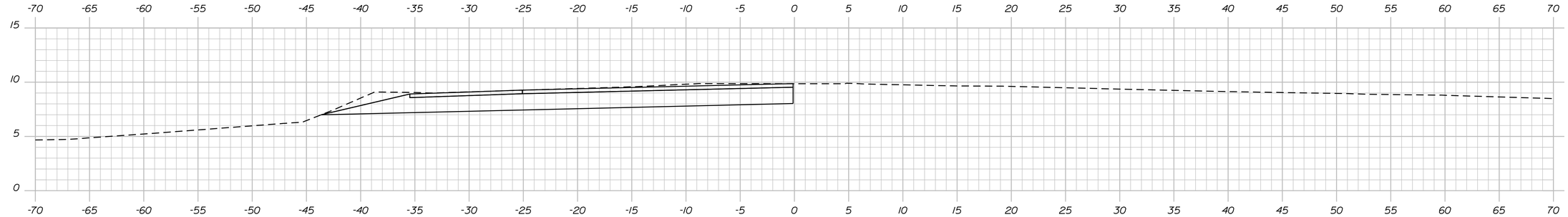

32+86.46
END TRANSITION
MATCH INTO SHOULDER
AT INTERSECTION

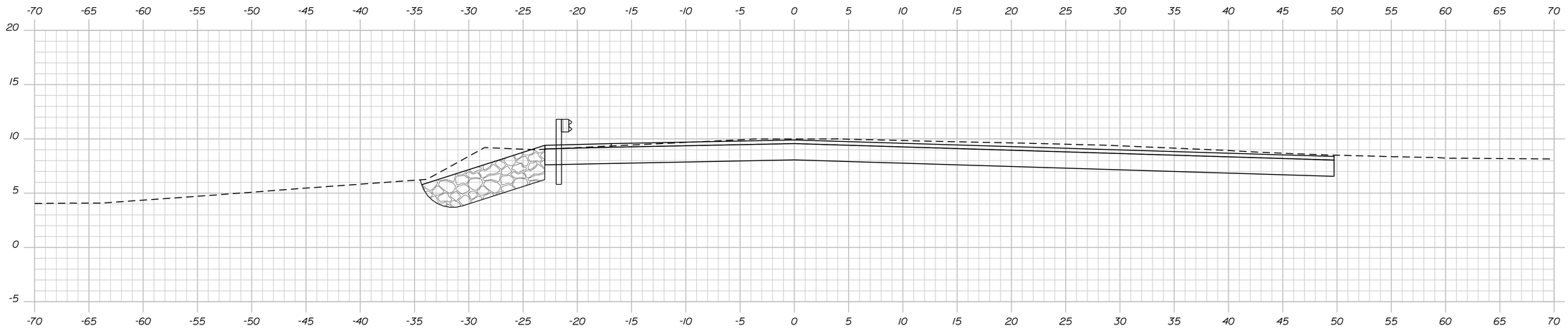

Sta. 32+87.3
End Guardrail Type 3c
Install Terminal End
Install Reflective Flexible Guardrail Markers (2)

32+75.00

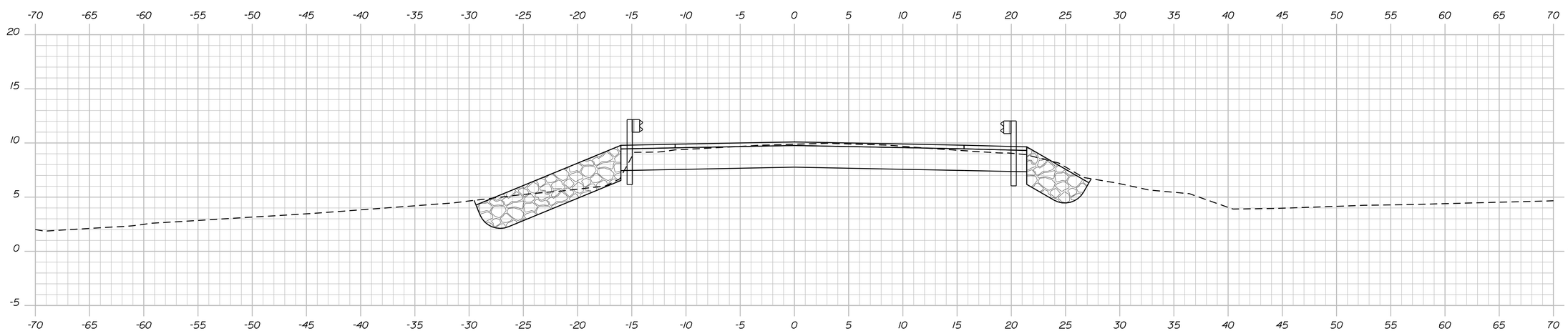

32+50.00
END PROJECT
BEGIN TRANSITION

Sta. 32+65.8
End Guardrail Type 3c
Install Terminal End
Install Reflective Flexible Guardrail Markers (2)

STATE OF MAINE
DEPARTMENT OF TRANSPORTATION

BH-1823(600)X

WIN
18236.00

BRIDGE NO. 3910

BRIDGE PLANS

PROJ. MANAGER	M. PARLIN	BY	DATE
DESIGN-DETAILED	BJN	BJN	------
CHECKED-REVIEWED	------	ADN	------
DESIGN2-DETAILED2	------	------	MAY 2012
DESIGN3-DETAILED3	------	------	------
REVISIONS 1	------	------	------
REVISIONS 2	------	------	------
REVISIONS 3	------	------	------
REVISIONS 4	------	------	------
FIELD CHANGES	------	------	------

SIGNATURE

P.E. NUMBER

DATE

SNAKE RIVER BRIDGE
SNAKE RIVER
BIDDEFORD YORK COUNTY

CROSS SECTIONS

SHEET NUMBER
10
OF 14

Sta. 32+50.00 to Sta. 32+86.00

Filename: ...\MSTA\010_Xsect_32-50_005.dgn Division: BRIDGE Username: Brian.J.Nichols Date:7/9/2013

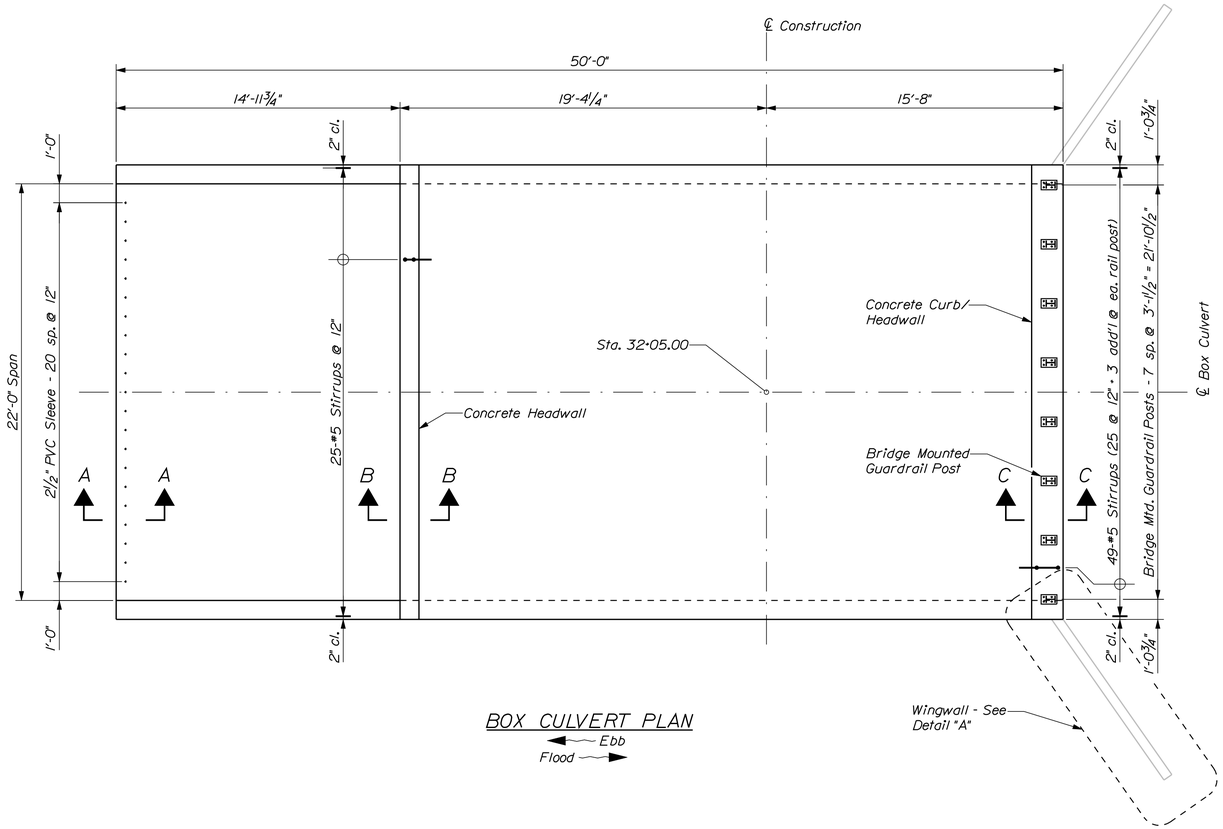

BOX CULVERT PLAN

Ebb

Flood

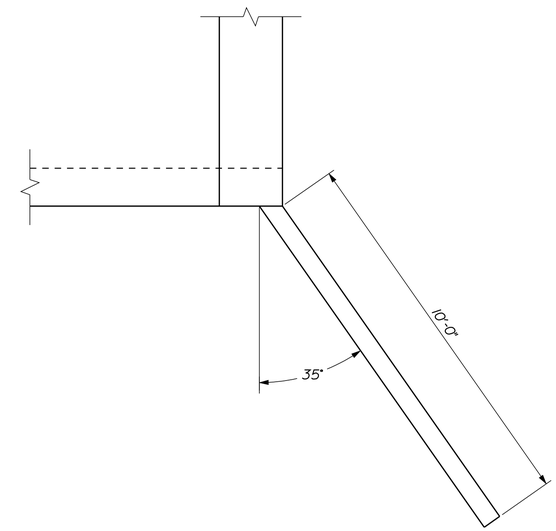

DETAIL "A"

~ PCMG Wingwall ~

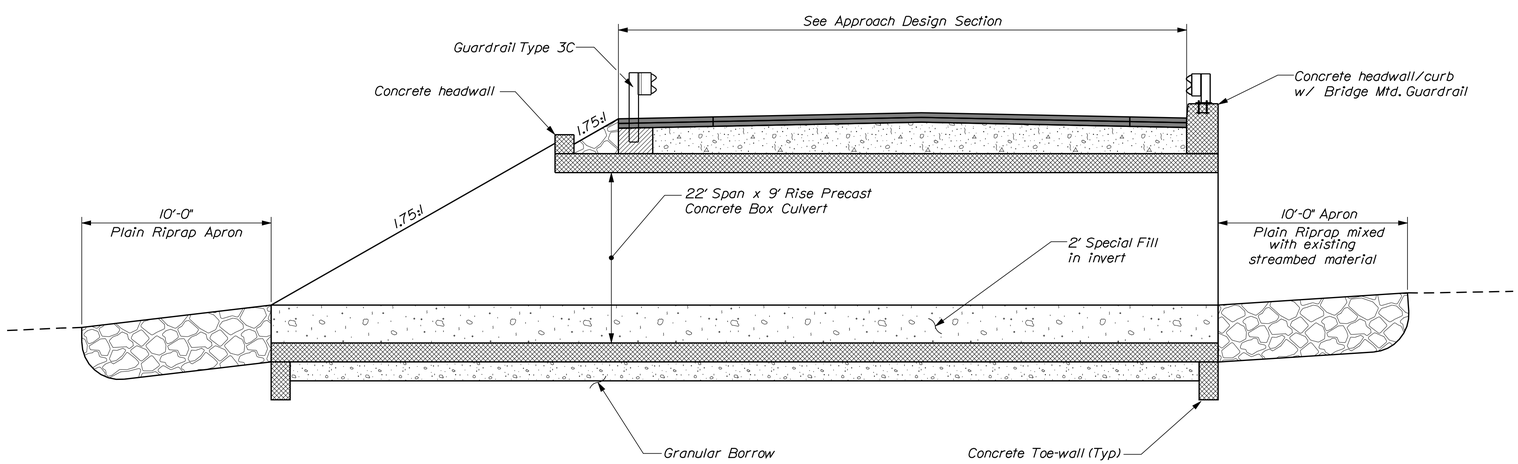

BOX CULVERT SECTION

Ebb

Flood

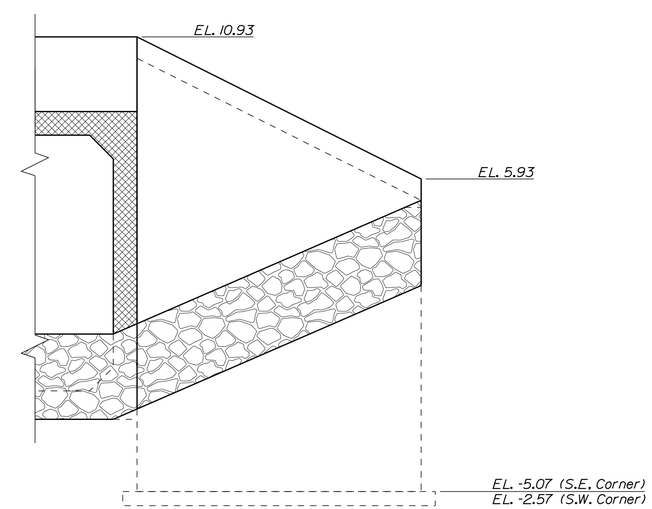

WINGWALL ELEVATION

Southeast Corner Shown ~ Southwest Corner - Opposite Hand

STATE OF MAINE
DEPARTMENT OF TRANSPORTATION

BH-1823(600)X

WIN 18236.00

BRIDGE NO. 3910

BRIDGE PLANS

		BY	DATE
PROJ. MANAGER	M. PARLIN		
DESIGN-DETAILED	BJN	BJN	
CHECKED-REVIEWED	----	ADN	
DESIGN2-DETAILED2	----	----	MAY 2012
DESIGN3-DETAILED3	----	----	----
REVISIONS 1	----	----	----
REVISIONS 2	----	----	----
REVISIONS 3	----	----	----
REVISIONS 4	----	----	----
FIELD CHANGES	----	----	----

SIGNATURE

P.E. NUMBER

DATE

SNAKE RIVER BRIDGE
SNAKE RIVER
BIDDEFORD YORK COUNTY

BOX CULVERT DETAILS

SHEET NUMBER

11

OF 14

Filename: ...\BRIDGE\MSTA\011_BoxCulvert.dgn Division: BRIDGE Username: Brian.J.Nichols Date:7/9/2013

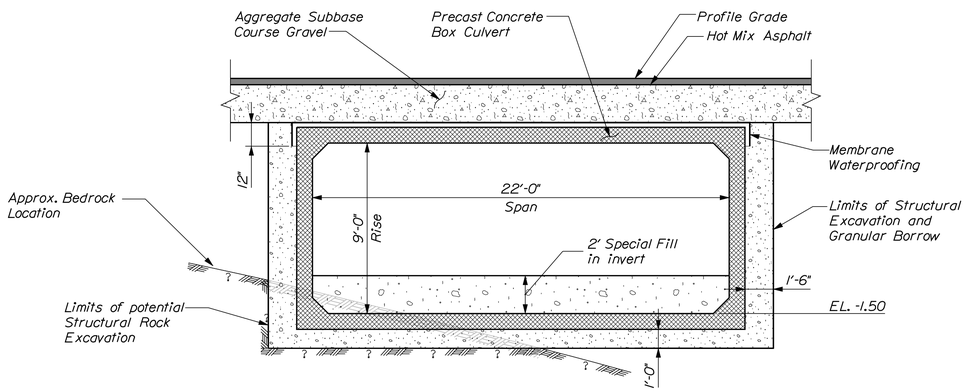

BOX CULVERT SECTION

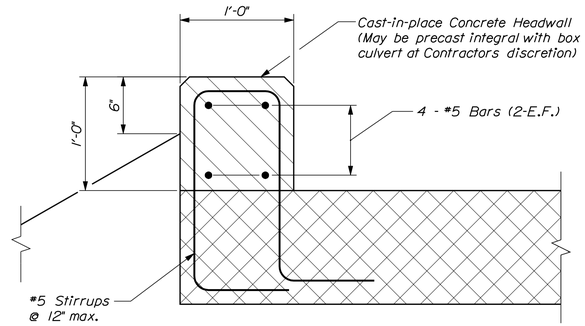

HEADWALL SECTION
Section "B-B"

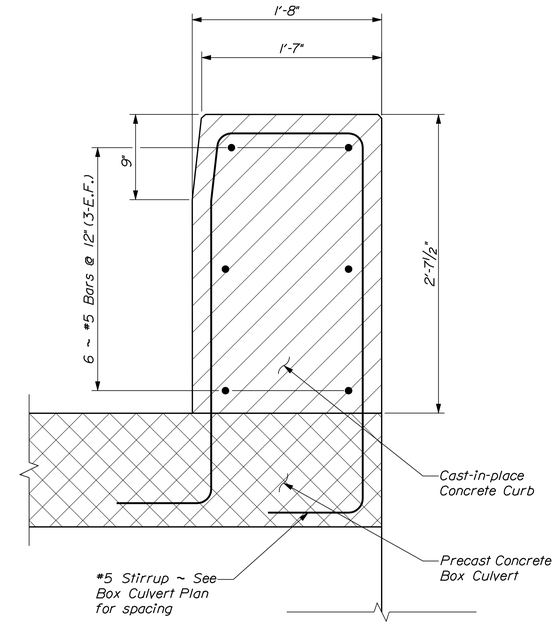

CURB SECTION
Section C-C
(Rail posts omitted for clarity)

PREFABRICATED CONCRETE MODULAR GRAVITY WALL NOTES

1. The Contractor shall provide a Prefabricated Concrete Modular Gravity (PCMG) Wall in accordance with Special Provision Section 635. The PCMG Wall shall be designed and stamped by a Registered Professional Engineer and the design shall be submitted to the Resident for review. Plan details are shown for estimating purposes only.

2. The precast units shall be one of the following, or equal:

"T-Wall" as manufactured by a licensed manufacturer of Neel Company

"DoubleWal" as manufactured by a licensed manufacturer of DoubleWal Corp., Plainville, Connecticut.

3. For PCMG Walls constructed on bedrock:

- At the strength limit state, the factored bearing pressure shall not exceed the factored bearing resistance of 12 ksf for all wall system bases.

- At the extreme limit state, the factored bearing pressure shall not exceed the factored bearing resistance of 26 ksf for all wall system bases.

- At the service limit state, the factored bearing pressure shall not exceed the factored bearing resistance of 20 ksf.

4. For PCMG Walls constructed on granular soils:

- At the strength limit state, the factored bearing pressure shall not exceed the factored bearing resistance of 5 ksf for wall system bases less than 8 feet long and 7 ksf for wall system bases greater than 10 feet long.

- At the service limit state, the factored bearing pressure shall not exceed the factored bearing resistance of 6 ksf.

5. The PCMG wall shall be designed considering a traffic surcharge equal to 2 feet of fill placed on the backfill surface. The unit of weight of the fill used for surcharge calculations shall be as outline in Special Provision 635 of the Contract Documents. Stability analyses considering traffic surcharge shall be performed in accordance with the most recent version of the AASHTO Standard Design Specifications for Highway Bridges.

6. The Contractor may construct the PCMG using crushed stone (MaineDOT 703.31) as backfill for behind, between the PCMG units. In using crushed stone for backfill the PCMG may be designed assuming a friction angle of 40 degrees for soil within the units. Crushed stone shall be compacted using either static or dynamic methods with sufficient energy to achieve a consistent dense course as approved by the Resident. Crushed stone shall be separated from the surrounding soil with erosion control geotextile (MaineDOT 722.03). Crushed stone as backfill and erosion control geotextile shall be incidental to Pay Item 635.14.

PREFABRICATED CONCRETE MODULAR GRAVITY WALL NOTES (CONT'D)

7. The PCMG wall shall be constructed with a 1.5 foot thick layer of crushed stone (MaineDOT 703.31) placed vertically along the inside face of the wall units. The layer of crushed stone shall extend vertically from the bottom course of the wall units to the top course of the wall units. The crushed stone shall be separated from the surrounding backfill with erosion control geotextile (MaineDOT 722.03). A minimum of 1.5 feet of overlap is required between adjacent lengths of geotextile. Payment for crushed stone and erosion control geotextile shall be considered incidental to Pay Item 635.14.

8. The PCMG walls shall consist of concrete with a maximum permeability of 2000 coulombs and corrosion resistant reinforcing steel.

9. The precast concrete units shall contain a minimum of 5.5 gallons per cubic yard of calcium nitrite solution or equivalent corrosion inhibitor approved by the Resident.

10. Concrete testing shall be done in accordance with Standard Specification 535.

11. A 1 foot wide drainage geotextile fabric shall be secured to the back of the units at all horizontal and vertical joints for the full height of the wall. Payment for the drainage geotextile fabric shall be considered incidental to Pay Item 635.14.

12. High water elevation for hydrostatic design condition is 4.27 ft.

PRECAST CONCRETE BOX CULVERT NOTES

1. The precast units shall be designed to carry construction loadings with a minimum fill cover of 6 inches over the top of the units.

2. The construction, handling, and assembly of the precast units shall be in accordance with Special Provisions Section 534, Precast Structural Concrete, and with the manufacturer's specifications as applicable.

3. Install standard membrane waterproofing over the top and to 12 inches down the exterior sides of the precast units.

4. Curb Stirrups and longitudinal curb bars shall be epoxy coated.

5. Payment for curb stirrups shall not be made directly, but shall be considered incidental to Item No. 534.71, Precast Concrete Box Culvert. Payment for longitudinal curb bars shall be made under the appropriate Reinforcing Steel Pay Item.

6. Concrete for curb, headwall and toe-walls, whether precast or cast-in-place shall be considered incidental to Item No. 534.71, Precast Concrete Box Culvert.

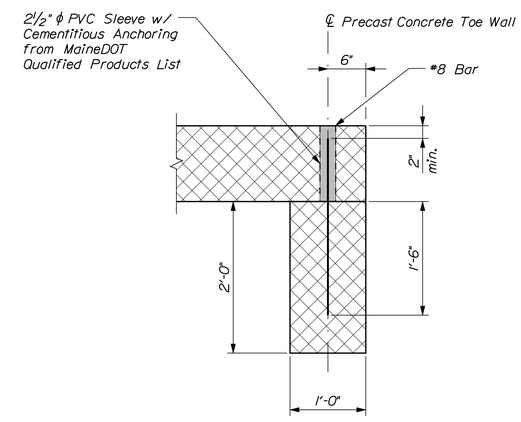

PRECAST CONCRETE TOE WALL DETAIL
Section "A-A"

STATE OF MAINE
DEPARTMENT OF TRANSPORTATION

BH-1823(600)X

WIN 18236.00

BRIDGE NO. 3910

BRIDGE PLANS

PROJ. MANAGER	M. PARLIN	BY	DATE
DESIGN-DETAILED	BJN	BJN	
CHECKED-REVIEWED	----	ADN	
DESIGN2-DETAILED2	----	---	MAY 2012
DESIGN3-DETAILED3	----	----	----
REVISIONS 1	----	----	----
REVISIONS 2	----	----	----
REVISIONS 3	----	----	----
REVISIONS 4	----	----	----
FIELD CHANGES	----	----	----

SIGNATURE

P.E. NUMBER

DATE

SNAKE RIVER BRIDGE
SNAKE RIVER
BIDDEFORD YORK COUNTY

BOX CULVERT DETAILS

SHEET NUMBER
12
OF 14

Filename: ...\MSTA\012_BoxCulvert_2.dgn Division: BRIDGE Username: Brian.J.Nichols Date:7/24/2013

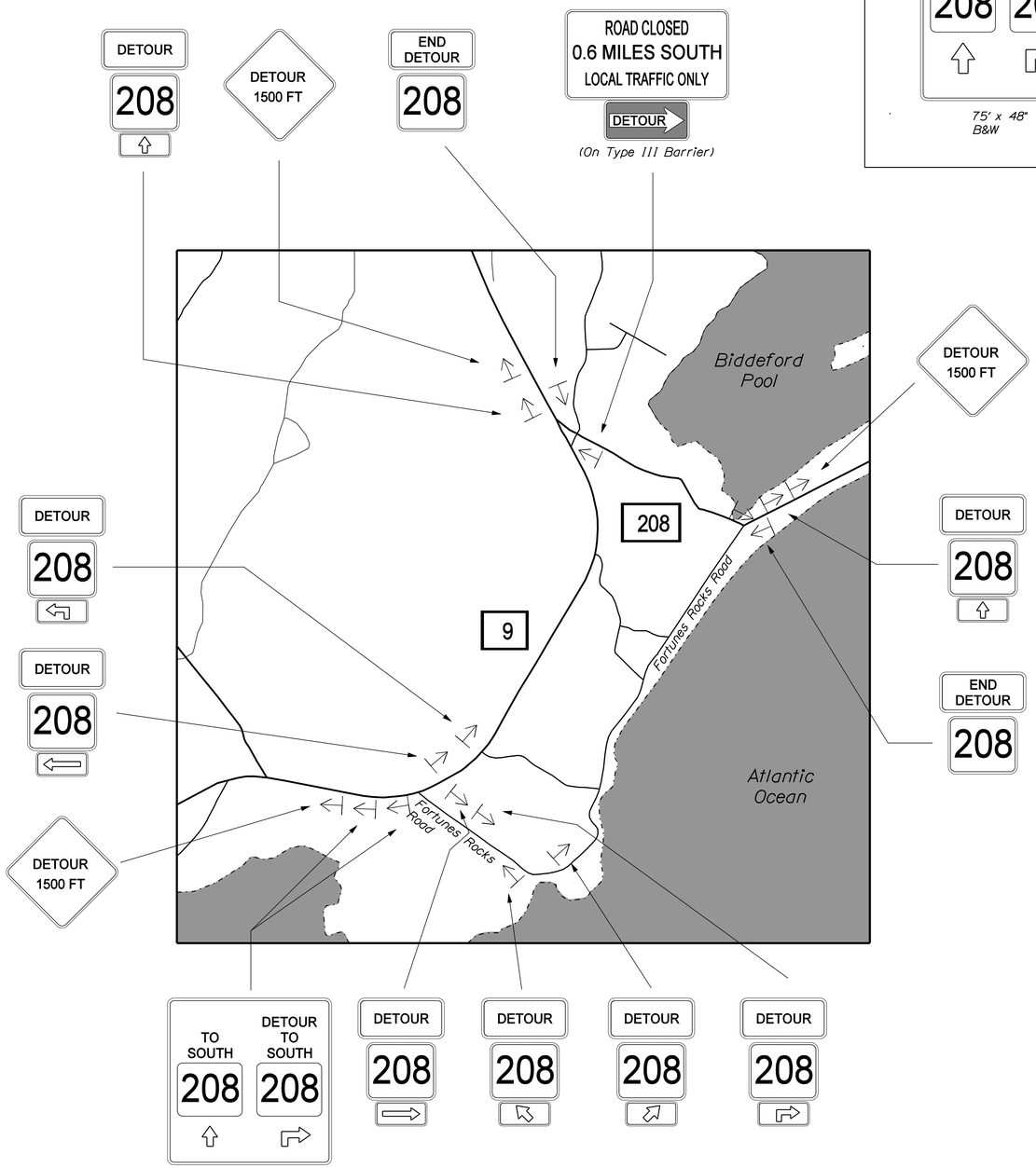

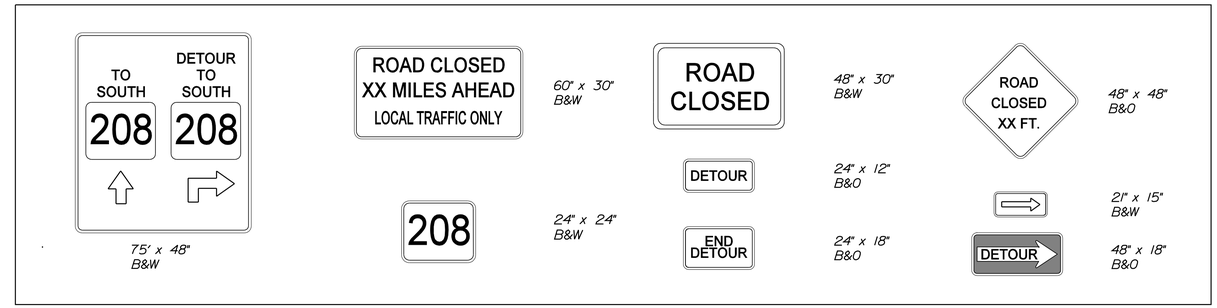

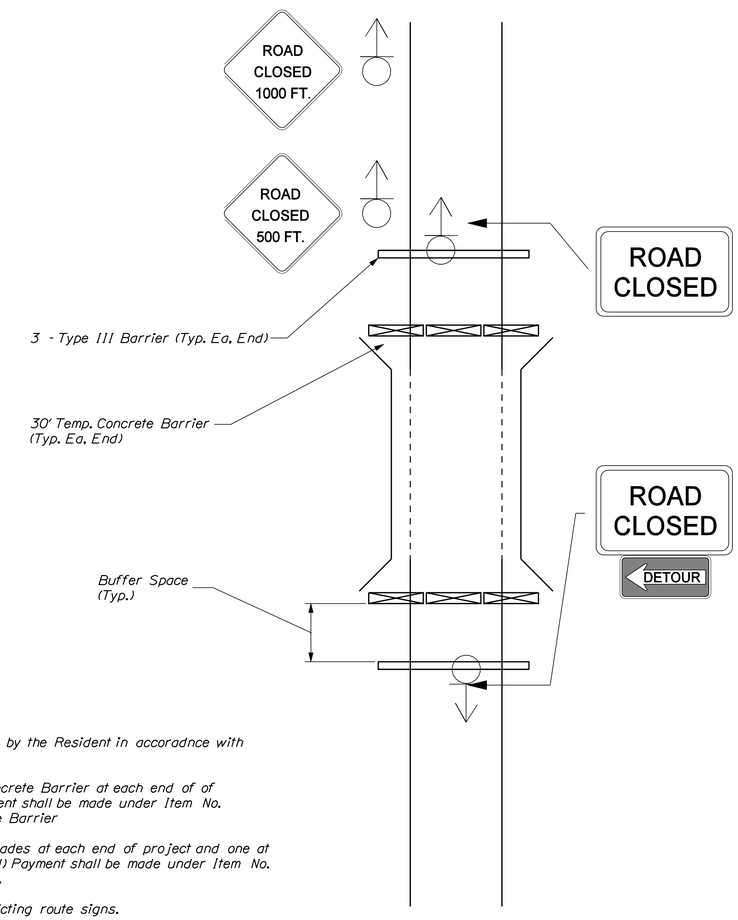

DETOUR NOTES

1. Spacing to be determined by the Resident in accoradnce with MUTCD

2. Install 30' Temporary Concrete Barrier at each end of of project (60' feet total) Payment shall be made under Item No. 526.301-Temporary Concrete Barrier

3. Install 3 Type III Barricades at each end of project and one at north end of detour (7 total) Payment shall be made under Item No. 652.312-Type III Barricade.

4. Cover or remove all conflicting route signs.

SIGNAGE AT PROJECT LOCATION

STATE OF MAINE
DEPARTMENT OF TRANSPORTATION

BH-1823(600)X

WIN 18236.00

BRIDGE NO. 3910

BRIDGE PLANS

PROJ. MANAGER	M. PARLIN	BY	DATE
DESIGN-DETAILED	BJN	BJN	
CHECKED-REVIEWED	-----	ADN	MAY 2012
DESIGN2-DETAILED2	-----	---	-----
DESIGN3-DETAILED3	-----	---	-----
REVISIONS 1	-----	---	-----
REVISIONS 2	-----	---	-----
REVISIONS 3	-----	---	-----
REVISIONS 4	-----	---	-----
FIELD CHANGES	-----	---	-----

SIGNATURE

P.E. NUMBER

DATE

SNAKE RIVER BRIDGE
SNAKE RIVER
BIDDEFORD YORK COUNTY

DETOUR PLAN

SHEET NUMBER
13
OF 14

Filename: ...\00\BRIDGE\MSTA\013_Detour.dgn Division: BRIDGE Username: Brian.J.Nichols Date:7/9/2013

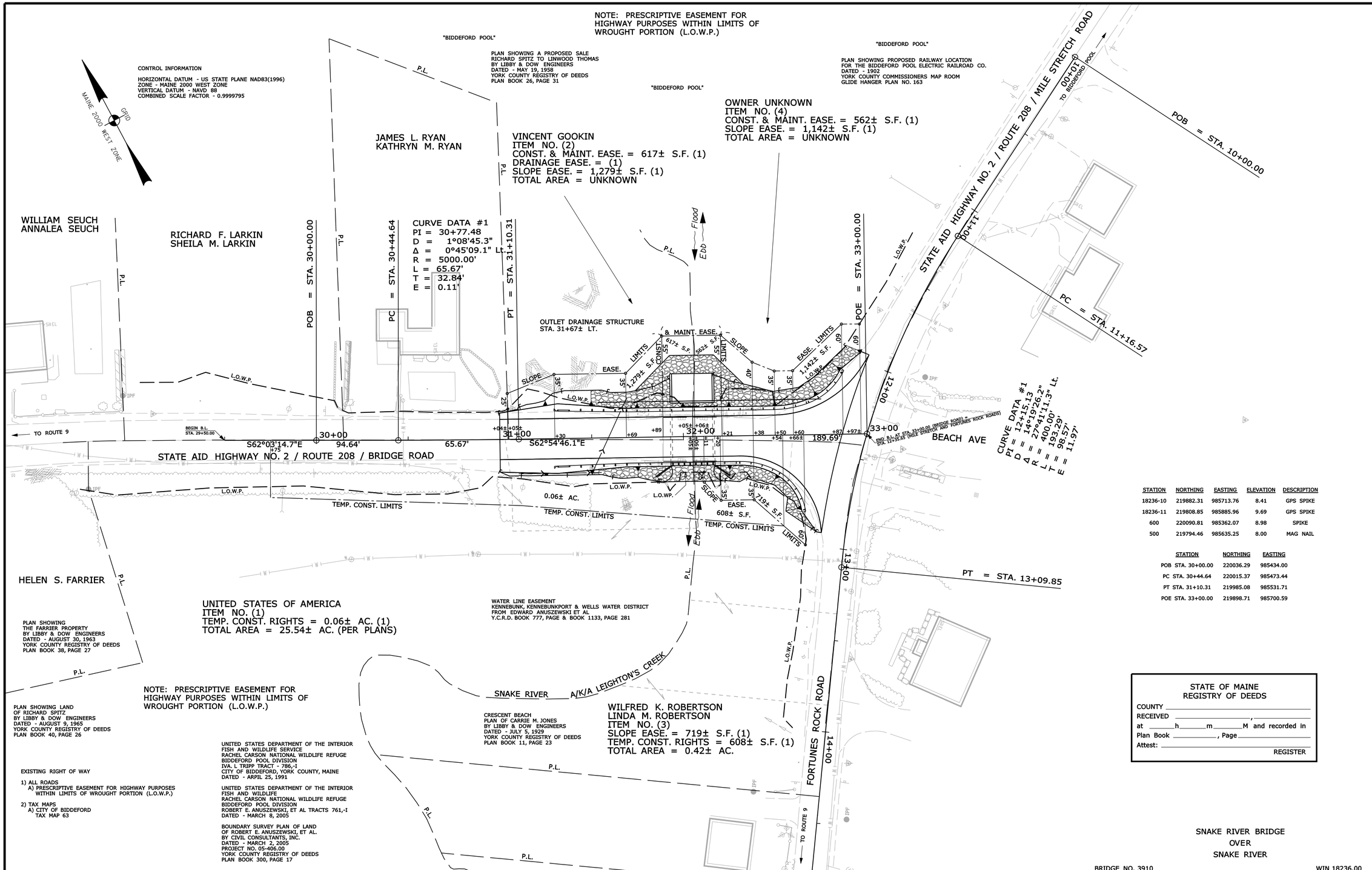

STATION	NORTHING	EASTING	ELEVATION	DESCRIPTION
18236-10	219882.31	985713.76	8.41	GPS SPIKE
18236-11	219808.85	985885.96	9.69	GPS SPIKE
600	220090.81	985362.07	8.98	SPIKE
500	219794.46	985635.25	8.00	MAG NAIL

	STATION	NORTHING	EASTING
POB	STA. 30+00.00	220036.29	985434.00
PC	STA. 30+44.64	220015.37	985473.44
PT	STA. 31+10.31	219985.08	985531.71
POE	STA. 33+00.00	219898.71	985700.59

THIS PLAN WAS PREPARED IN CONNECTION WITH THE DEPARTMENT'S ACQUISITION OF REAL PROPERTY FOR TRANSPORTATION PURPOSES. IT CANNOT BE USED TO ESTABLISH LEGAL BOUNDARIES BETWEEN ABUTTING PROPERTY OWNERS.

SYMBOLS
- IP or IPF (IRON PIPE or PIN FOUND)
- ST. (SEPTIC TANK)
- (ROW MONUMENT)
- BM (TRAVERSE POINT)
- WELL
- GRADING LIMIT LINE
- CONSTRUCTION LIMIT LINE
- PROPERTY LINE
- LIMITS OF "WROUGHT" PORTION (L.O.W.P.)
- EXISTING RIGHT OF WAY
- NEW RIGHT OF WAY
- NEW ROW WITHIN EXIST. ROW
- CONTROL OF ACCESS
- WATER LINE
- GAS LINE
- ELECTRIC LINE
- TELEPHONE LINE
- SEWER LINE

ITEM	TECH	CHECKED
BASE MAP		
EXIST. R/W	G.L.L.	C.W.K.
PROP. LINES	G.L.L.	
AREAS	G.L.L.	G.L.L.

STATE OF MAINE
REGISTRY OF DEEDS
COUNTY _____
RECEIVED _____, _____
at _____h_____m_____M and recorded in
Plan Book _____, Page _____
Attest: _____
REGISTER

STATE OF MAINE
DEPARTMENT OF TRANSPORTATION
16 STATE HOUSE STATION - AUGUSTA, ME 04333-0016
BIDDEFORD
RIGHT OF WAY MAP

SNAKE RIVER BRIDGE
OVER
SNAKE RIVER

BRIDGE NO. 3910 WIN 18236.00

REVISIONS			
NO.	DATE	DESCRIPTION	BY

PLAN FILED IN PLAN BOOK		PAGE	COUNTY RECORD		
NO.	GRANTOR	INSTRUMENT	DATE	BOOK	PAGE

DAVID BERNHARDT
COMMISSIONER
KENNETH L. SWEENEY
CHIEF ENGINEER
DATE

To the best of my knowledge and belief the Highway Right of Way lines depicted hereon are based upon a survey conforming to the Standards of Practice promulgated by the Maine Board of Licensure for Professional Land Surveyors 02-360 CMR, Chapter 90; Exceptions: (1) No separate survey report, (2) Monumentation only as shown on plan. See this plan for coordinates. (3) Other boundary lines, including lines between abutters are approximate and for general reference purposes only.

STATE AID HIGHWAY NO. 2
ROUTE 208 / BRIDGE ROAD
BIDDEFORD YORK COUNTY
FEDERAL AID PROJECT NO. BH-1823(600)X

MARCH 2013 | RIGHT-OF-WAY MAP | D.O.T. FILE NO. 16-491
SCALE 1" = 25' | SHEET 1 OF 1

SHEET NUMBER
14
OF 14

Filename: ...\00\ROW\MSTA\014_RWPLAN1.dgn Division: BRIDGE Username: Brian.J.Nichols Date:7/9/2013