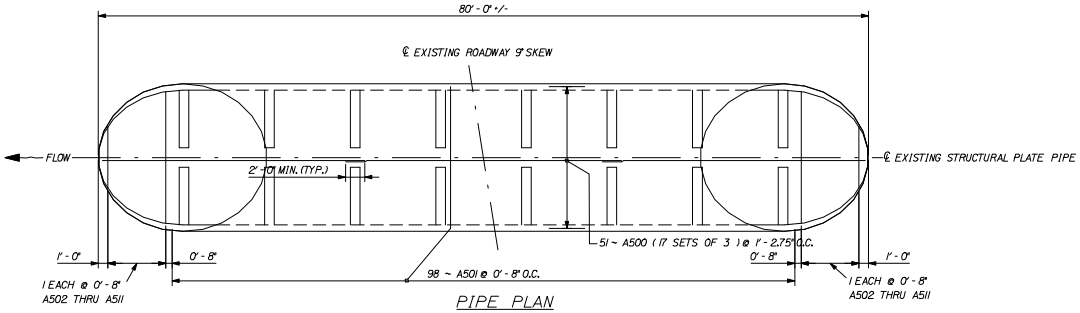

PIPE PLAN

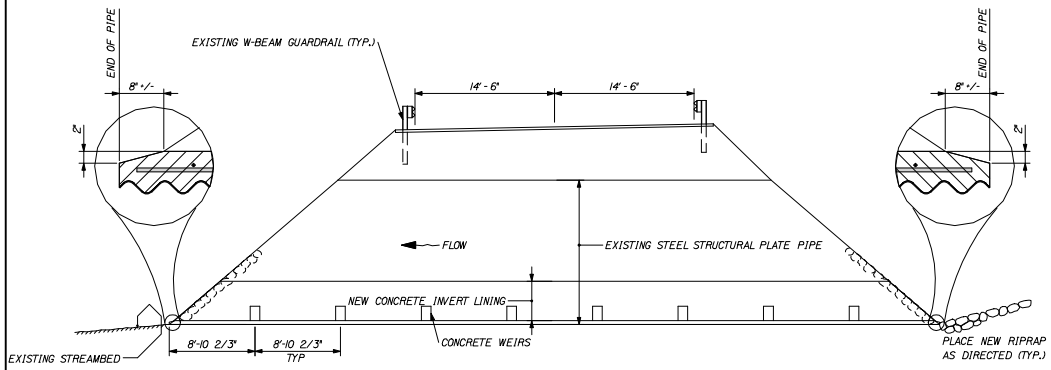

TRANSVERSE SECTION

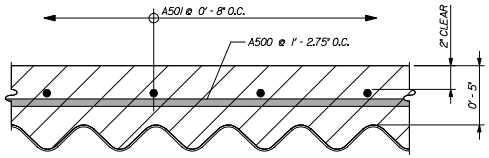

SECTION A-A

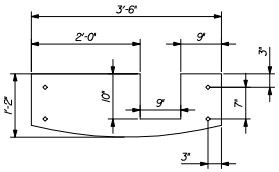

BOLT IN FISH
WEIR PLATE

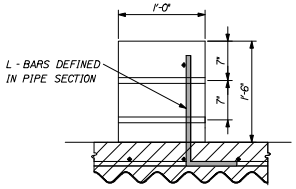

FISH WEIR
REINFORCING DETAIL

REINFORCING STEEL SCHEDULE

MARK	SIZE	QUANTITY	LENGTH	DESCRIPTION	
A500	#5	51	28' - 0"	LONGITUDINAL	
A501	#5	98	20' - 5"	TRANSVERSE	
A502	#5	2	19' - 11"	TRANS. - ENDS	
A503	#5	2	18' - 9"	TRANS. - ENDS	
A504	#5	2	17' - 5"	TRANS. - ENDS	
A505	#5	2	16' - 0"	TRANS. - ENDS	
A506	#5	2	14' - 11"	TRANS. - ENDS	
A507	#5	2	13' - 7"	TRANS. - ENDS	
A508	#5	2	12' - 1"	TRANS. - ENDS	
A509	#5	2	10' - 5"	TRANS. - ENDS	
A510	#5	2	8' - 7"	TRANS. - ENDS	
A511	#5	2	6' - 3"	TRANS. - ENDS	-- A501 THRU A511
A512	#5	32	4' - 0"	L - BAR 7"	
A513	#5	32	2' - 2"	L - BAR 7"	
A514	#5	32	1' - 10"	L - BAR 7"	
A515	#5	32	1' - 4"	L - BAR 7"	

PIPE NOTES

1. SURFACE OF THE PIPE AGAINST WHICH CONCRETE IS TO BE PLACES SHALL BE THOROUGHLY CLEANED SO AS TO REMOVE ALL LOOSE CORROSION. IN AREAS WHERE THE METAL IS NON-EXISTANT, A PRELIMINARY CONCRETE PLACEMENT SHALL BE MADE, USING FORMS WHERE REQUIRED, TO FILL VOIDS AND TO ESTABLISH THE ORIGINAL LINES OF THE PIPE. THE FINAL PLACEMENT SHALL THEN BE MADE AS SHOWN. PAYMENT FOR THIS WORK WILL BE CONSIDERED INCIDENTAL TO ITEM NO. 502.325 STRUCTURAL CONCRETE INVERT LINING

2. THREE ROWS OF SHEAR CONNECTORS SHALL BE STAGGERED LONGITUDINALLY AT 18 INCH SPACING ALONG EACH SIDE OF THE PIPE BARREL. SHEAR CONNECTORS SHALL BE M16X75 STUDS OR MACHINE BOLTS WELDED TO THE CRESTS OF THE CORRUGATIONS. APPROXIMATELY 320 SHEAR CONNECTORS ARE REQUIRED. PAYMENT WILL BE CONSIDERED INCIDENTAL TO THE CONTRACT ITEMS.

3. REINFORCED STEEL SHALL HAVE A MINIMUM CONCRETE COVER OF 2 INCHES UNLESS OTHERWISE SHOWN

4. THE EXISTING STRUCTURE PLATE PIPE MAY HAVE A SLIGHT DEFORMATION REQUIRING FIELD BENDING AND/OR CUTTING OF THE REINFORCING STEEL.

5. THE CONCRETE SHALL HAVE A ROUGH BROOM OR GUN FINISH ALONG THE ENTIRE LENGTH OF THE PIPE AS INVERT

6. HDPE PLASTIC WEIR PLATES SHALL BE MOUNTED IN AN ALTERNATING MANNER SO THAT THE NOTHCES DO NOT ALIGN FROM WEIR TO WEIR. THESE PLATES AND ANY HARDWARE NECESSARY FOR INSTALLATION SHALL BE CONSIDERED INCIDENTAL TO THE CONTRACT ITEMS.

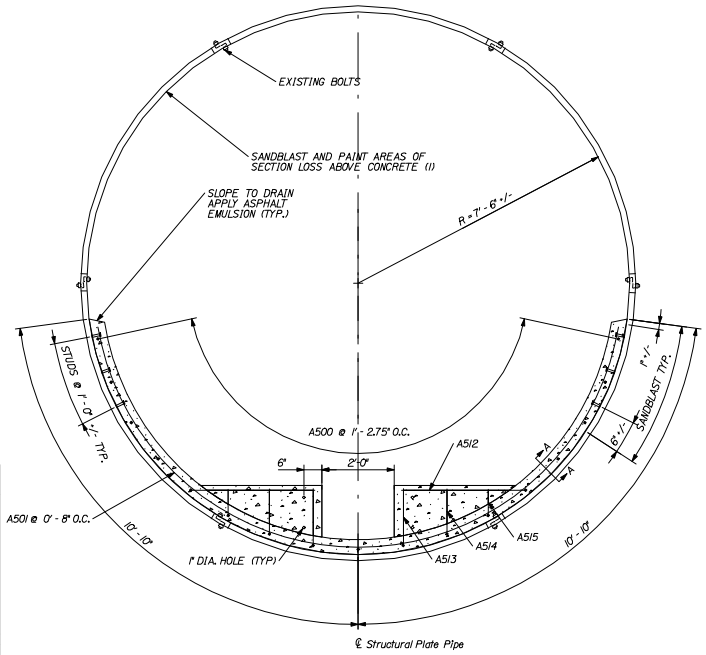

PIPE SECTION
(1) MC Zinc primer and MC Urethane with a Mox Tar Topcoat

STATE OF MAINE
DEPARTMENT OF TRANSPORTATION

PIN # 15639.00 ~ BRIDGE # 3939

PIN 15639.00 HIGHWAY PLANS

PROJ. MANAGER	HEATH COWAN	BY	DATE
DESIGN-DETAILED	B MOUSSEAU		
CHECKED-DETAILED			
DESIGN2-DETAILED2			
REVISIONS 1			
REVISIONS 2			
REVISIONS 3			
REVISIONS 4			
FIELD CHANGES			

SIGNATURE

P.E. NUMBER

DATE

CANTON
CANTON POINT ROAD
PIPE DETAILS

SHEET NUMBER
3
OF 3

Filename: $file$ Division: $wkgroup$ Username: $user$ Date: $date$