STATE OF MAINE
DEPARTMENT OF TRANSPORTATION

PLAN LEGEND

Town, County, State
Property Lines
R/W Lines-Existing
R/W Lines-Proposed
Culvert-Existing
Culvert Proposed
Curbing — Existing — Proposed
Type 1
Type 3
Type 5
Outline of Bodies of Water
Ledge
Buildings
Trees — Conifer — Deciduous
Tree Line
Clearing Limit Line — CLL
Centerline-Existing
Centerline-Proposed — 10+00
Travelway-Existing
Travelway-Proposed
Railroad
Catch Basins — Existing — Proposed
Manholes — Existing — Proposed
Proposed Underdrain
Proposed Ditch
Existing Ditch
Utlity Poles — Existing — Proposed
Fire Hydrants — Existing — Proposed
Existing Water Line
Existing San. Sewer
Existing San. Sewer Manhole
Guardrail-Existing
Guardrail-Proposed
Guardrail-Cable, Other

LIBERTY
WALDO COUNTY
INTERSECTION ROUTES 173\220
STP-1788(800)X
PROJECT LENGTH : 0.18 MILES

INDEX OF SHEETS

Description	Sheet No.
Title Sheet	1
Typical Sections	2-3
Estimated Quantities/Earthwork Summary	4
Drainage Sheet	5
General Notes	6
Construction Notes	7
Special Details	8-10
Boring Logs	11-12
Plan & Profiles	13-15
Access Road Profile	16
Cross - Sections	17-35
Right of Way Map	36-37

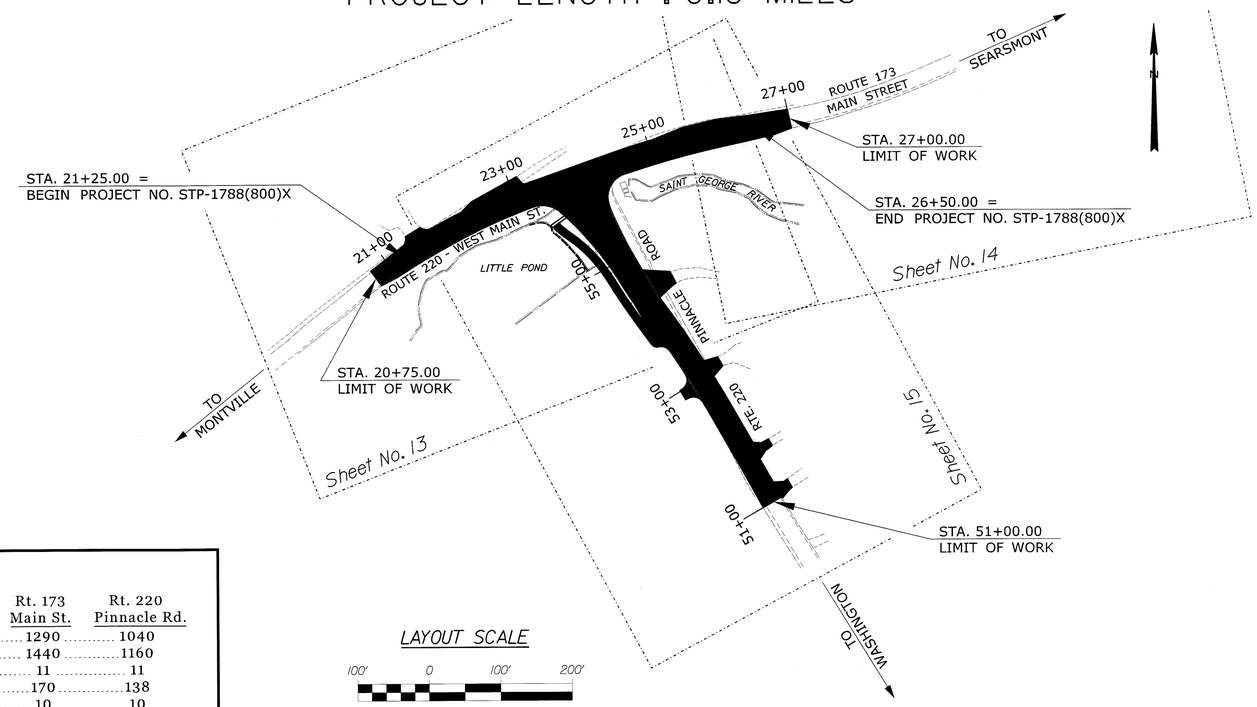

TRAFFIC DATA

	Rt. 220 W. Main St.	Rt. 173 Main St.	Rt. 220 Pinnacle Rd.
Current (2013) AADT	1470	1290	1040
Future (2025) AADT	1650	1440	1160
DHV - % of AADT	12	11	11
Design Hour Volume	211	170	138
% Heavy Trucks (AADT)	10	10	10
% Heavy Trucks (DHV)	10	10	10
Directional Distribution (DHV)	53	53	53
18 kip Equivalent P 2.0	95	85	68
18 kip Equivalent P 2.5	91	81	65
Design Speed (mph)	45	35	35
Corridor Priority:	4	4	4
Functional Class:	Major Urban Collectors		

LAYOUT SCALE

100' 0 100' 200'

Scale in Feet

PROJECT LOCATION:	INTERSECTION OF ROUTE 173 & ROUTE 220
PROGRAM AREA:	HIGHWAY PROGRAM
SCOPE OF WORK:	HIGHWAY RECONSTRUCTION WITH INTERSECTION IMPROVEMENTS

WIN 17888.00 STP-1788(800)X

STATE OF MAINE
DEPARTMENT OF TRANSPORTATION

APPROVED — DATE 8/21/13
COMMISSIONER:
CHIEF ENGINEER: — DATE 8-20-13

STATE OF MAINE — ATLEE MOUSSEAU — No. 11645 — PROFESSIONAL ENGINEER

SIGNATURE
10415
P.E. NUMBER
8-15-13
DATE

PROJECT INFORMATION

PROGRAM	Highway Program
PROJECT MANAGER	E. Martin
DESIGNER	S. LeBlanc
CONSULTANT	
PROJECT RESIDENT	
CONTRACTOR	
PROJECT COMPLETION DATE	

LIBERTY
INTERSECTION ROUTES 173\220

TITLE SHEET

SHEET NUMBER
1
OF 37

Filename: ...\00\HIGHWAY\MSTA\001_Title.dgn Division: HIGHWAY Username: sarah.k.leblanc Date:8/15/2013

FULL RECONSTRUCTION - W. MAIN ST. (RT. 220) TO MAIN ST. (RT. 173)

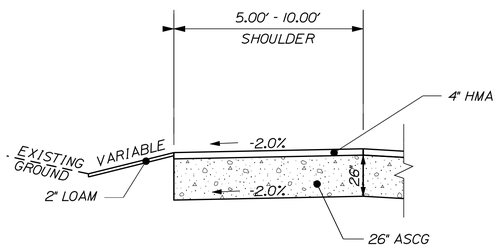

AGGREGATE SUBBASE COURSE GRAVEL
HIGH SIDE SUPERELEVATED VAR. LT. SHOULDER 8.03 CY/100 LF/1 LF WIDTH
STATION TO STATION
5 FT. = 21+32.74 TO 23+22.41 LT
VAR. = 25+05.14 TO 25+50 LT
10 FT. = 25+50 TO 26+00 LT
VAR. = 26+00 TO 27+00 LT.

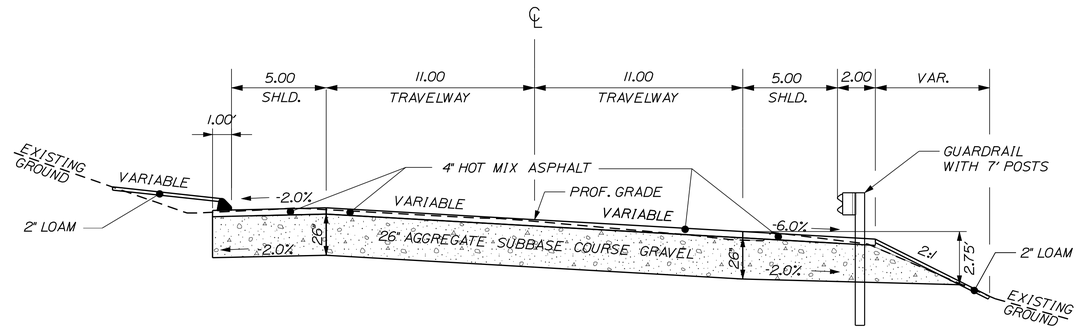

SUPERELEVATED FULL RECONSTRUCTION

AGGREGATE SUBBASE COURSE GRAVEL		
HIGH SIDE SUPERELEVATED 5 FT. LT. SHOULDER with CURB 48.15 CY/100 LF	SUPERELEVATED 11 FT. TRAVELWAYS 176.54 CY/100LF	LOW SIDE SUPERELEVATED 5 FT. RT. SHOULDER with GUARDRAIL 69.21 CY/100 LF
STATION TO STATION	STATION TO STATION	STATION TO STATION
23+22.41 TO 25+05.14 LT	21+25.00 TO 26+50.00	23+00.00 TO 23+18.96 RT
		25+95.37 TO 26+50.00 RT

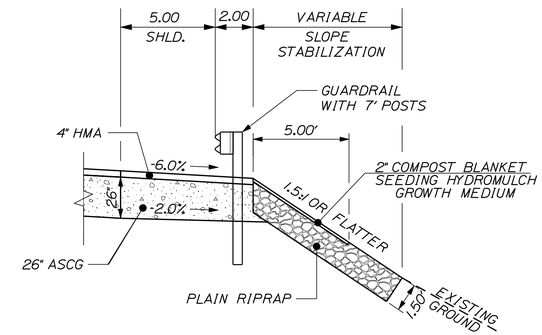

RIPRAP SLOPE

AGGREGATE SUBBASE COURSE GRAVEL
LOW SIDE SUPERELEVATED 5 FT. RT. SHOULDER with GUARDRAIL 61.19 CY/100 LF
STATION TO STATION
21+25.00 RT TO 55+61.00 LT

SUPERELEVATION TABLE

LT. SHOULDER	LT. TRAVELWAY	STATION	RT. TRAVELWAY	RT. SHOULDER
		START		
MATCH	MATCH	20+75	MATCH	MATCH
-4.6	4.8	21+00	-6.6	-9.9
-2.0	5.7	21+25	-5.7	-6.0
		TO		
-2.0	5.7	23+00	-5.7	-6.0
-2.0	5.2	23+50	-5.2	-6.0
-2.0	4.8	24+00	-4.8	-6.0
-2.0	4.3	24+50	-4.3	-6.0
-2.0	3.8	25+00	-3.8	-6.0
		TO		
-2.0	3.8	25+50	-3.8	-6.0
-2.0	1.8	26+00	-3.4	-6.0
-3.5	-0.1	26+50	-3.1	-8.0
MATCH	MATCH	27+00	MATCH	MATCH

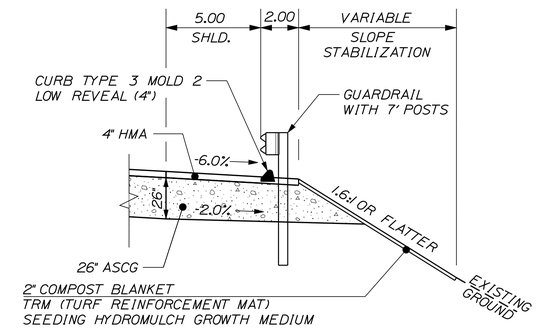

TURF REINFORCEMENT MAT (TRM) SLOPE

AGGREGATE SUBBASE COURSE GRAVEL
LOW SIDE SUPERELEVATED 5 FT. RT. SHOULDER with GUARDRAIL 63.35 CY/100 LF
STATION TO STATION
24+76.66 TO 25+95.37 RT

NOTE:

1. THE PAVEMENT, BASE AND SUBBASE DEPTHS AS SHOWN ON THE PLANS ARE INTENDED TO BE NOMINAL.

2. WHEN SUPERELEVATION EXCEEDS THE SLOPE OF THE LOW SIDE SHOULDER, THE LOW SIDE SHOULDER SHALL HAVE THE SAME SLOPE AS THE TRAVELWAY.

3. CROWNS FOR BOTH NORMAL AND SUPERELEVATION SECTIONS FOR ALL COURSES OF SUBBASE AND PAVEMENT SHALL BE STRAIGHT.

4. THE GRAVEL QUANTITY CALCULATION IS BASED ON A 2" LOAM OR DIRTY BORROW DEPTH. THE ACTUAL DEPTH MAY VARY. SEE THE GENERAL NOTES.

5. THE ALGEBRAIC DIFFERENCE BETWEEN THE SHOULDER AND TRAVEWAY CROSS SLOPES "ROLLOVER" SHALL NOT EXCEED 8%.

6. THE STATIONING SHOWN UNDER EACH TYPICAL IS APPROXIMATE.

NOT TO SCALE

STATE OF MAINE
DEPARTMENT OF TRANSPORTATION

STP-1788(800)X

WIN 17888.00

HIGHWAY PLANS

		SIGNATURE
DESIGN-DETAILED	S. LeBlanc	J. Harden
CHECKED-REVIEWED		
DESIGN2-DETAILED2		
DESIGN3-DETAILED3		
REVISIONS 1		
REVISIONS 2		
REVISIONS 3		
REVISIONS 4		
FIELD CHANGES		

P.E. NUMBER

DATE

LIBERTY
INTERSECTION ROUTES 173\220

TYPICAL SECTIONS

SHEET NUMBER
2
OF 37

Filename: ...\highway\msta\002_Typical.dgn Division: HIGHWAY Username: sarah.k.leblanc Date:8/20/2013

FULL RECONSTRUCTION - PINNACLE ROAD (RT. 220)

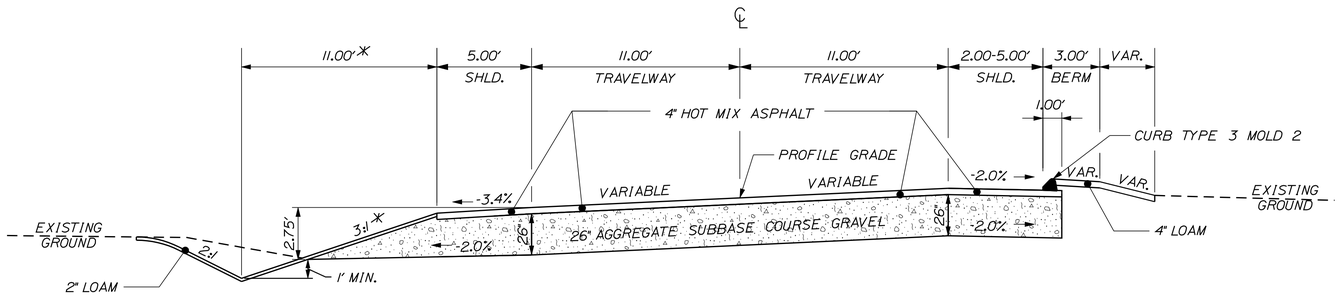

SUPERELEVATED FULL CONSTRUCTION

AGGREGATE SUBBASE COURSE GRAVEL		
5 FT. LT. LOW SHOULDER 69.71CY/100 LF	11 FT. TRAVELWAYS 176.81 CY/100 LF	2 FT. RT. SHOULDER WITH CURB 24.08 CY/100 LF
STATION TO STATION	STATION TO STATION	STATION TO STATION
51+50.00 TO 53+16.00 LT	51+50.00 TO 54+73.02 LT	51+50.00 TO 51+60.53 RT
✳ 53+16.00 TO 53+58.50 LT	51+50.00 TO 55+71.79 RT	5 FT. RT. SHOULDER WITH CURB 48.15 CY/100 LF
VAR. SIDESLOPE		STATION TO STATION
VAR. DITCH OFFSET		51+86.54 TO 54+25.40 RT

SUPERELEVATION TABLE

LT. SHOULDER	LT. TRAVELWAY	STATION	RT. TRAVELWAY	RT. SHOULDER
		START		
MATCH	MATCH	51+00	MATCH	-3.5
-3.4	-3.4	51+50	-2.0	-2.0
-3.4	-3.4	52+00	0.0	-2.0
-3.4	-3.4	52+50	2.0	-2.0
-3.4	-3.4	53+00	3.4	-2.0
		TO		
-3.4	-3.4	54+00	3.4	-2.0
-2.0	-1.6	54+50	1.6	-2.0
-2.0	0.2	55+00	-0.2	-2.0
-2.0	2.0	55+50	-2.0	-2.0
-2.0	3.7	56+00	-3.7	-3.7

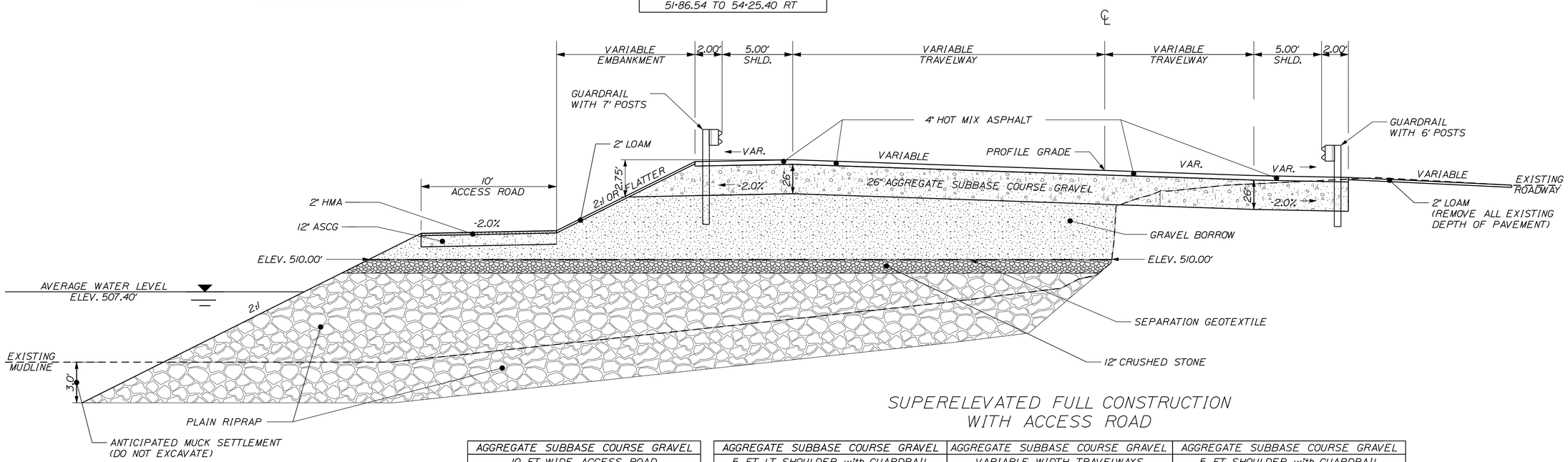

SUPERELEVATED FULL CONSTRUCTION WITH ACCESS ROAD

AGGREGATE SUBBASE COURSE GRAVEL	AGGREGATE SUBBASE COURSE GRAVEL	AGGREGATE SUBBASE COURSE GRAVEL	AGGREGATE SUBBASE COURSE GRAVEL
10 FT. WIDE ACCESS ROAD 37.04 CY/100 LF	5 FT. LT. SHOULDER with GUARDRAIL 77.50 CY/100 LF	VARIABLE WIDTH TRAVELWAYS 8.04 CY/100 LF/LF OF WIDTH	5 FT. SHOULDER with GUARDRAIL 56.17 CY/100 LF
STATION TO STATION	STATION TO STATION	STATION TO STATION	STATION TO STATION
54+00.00 TO 55+61.00 LT	55+30.00 TO 56+11.79LT	54+73.02 to 56+11.79 LT	54+74.82 TO 56+111.79 RT
		55+71.79 to 56+11.79 RT	54+00.00 TO 55+30.00 LT

NOTE:

1. THE PAVEMENT, BASE AND SUBBASE DEPTHS AS SHOWN ON THE PLANS ARE INTENDED TO BE NOMINAL.

2. WHEN SUPERELEVATION EXCEEDS THE SLOPE OF THE LOW SIDE SHOULDER, THE LOW SIDE SHOULDER SHALL HAVE THE SAME SLOPE AS THE TRAVELWAY.

3. CROWNS FOR BOTH NORMAL AND SUPERELEVATION SECTIONS FOR ALL COURSES OF SUBBASE AND PAVEMENT SHALL BE STRAIGHT.

4. THE GRAVEL QUANTITY CALCULATION IS BASED ON A 2" LOAM OR DIRTY BORROW DEPTH. THE ACTUAL DEPTH MAY VARY. SEE THE GENERAL NOTES.

5. THE ALGEBRAIC DIFFERENCE BETWEEN THE SHOULDER AND TRAVEWAY CROSS SLOPES "ROLLOVER" SHALL NOT EXCEED 8%.

6. THE STATIONING SHOWN UNDER EACH TYPICAL IS APPROXIMATE.

7. UNDER WATER QUANTITY MAY BE MEASURED BY TRUCK LOAD COUNT WITH NO REDUCTION IN VOLUME.

8. A SILT BOOM/TURBIDITY CURTAIN SHALL BE USED WHEN PLACING RIP RAP IN THE WATER AS PER SPECIAL PROVISION 656 AND DIRECTED BY THE RESIDENT. PAYMENT SHALL BE INCIDENTAL TO ITEM 656.75 TEMPORARY SOIL EROSION AND WATER POLLUTION CONTROL.

NOT TO SCALE

STATE OF MAINE
DEPARTMENT OF TRANSPORTATION

STP-1788(800)X

WIN 17888.00

HIGHWAY PLANS

PROJ. MANAGER	E. Marion	BY	DATE
DESIGN-DETAILED	S. LeBlanc	J. Harden	x
CHECKED-REVIEWED	-----	-----	-----
DESIGN2-DETAILED2	-----	-----	-----
DESIGN3-DETAILED3	-----	-----	-----
REVISIONS 1	-----	-----	-----
REVISIONS 2	-----	-----	-----
REVISIONS 3	-----	-----	-----
REVISIONS 4	-----	-----	-----
FIELD CHANGES	-----	-----	-----

SIGNATURE

P.E. NUMBER

DATE

LIBERTY
INTERSECTION ROUTES 173\220

TYPICAL SECTIONS

SHEET NUMBER

3

OF 37

Filename: ...\003_Typical_Pinnacle Rd.dgn Division: HIGHWAY Username: sarah.k.leblanc Date:9/10/2013

ESTIMATED QUANTITIES

	ITEM NO.	DESCRIPTION	QUANTITY	UNIT
	201.23	REMOVING SINGLE TREE TOP ONLY	2	EA
	201.24	REMOVING STUMP	2	EA
	203.20	COMMON EXCAVATION	5026	CY
*	203.25	GRANULAR BORROW	50	CY
	203.26	GRAVEL BORROW	510	CY
	203.35	CRUSHED STONE	440	CY
*	206.061	STRUCT. EARTH EXCAV. - DRAINAGE AND MINOR STRUCT., BELOW GRADE	50	CY
	304.10	AGGREGATE SUBBASE COURSE - GRAVEL	3410	CY
	403.208	HOT MIX ASPHALT 12.5 MM HMA SURFACE	530	T
	403.209	HOT MIX ASPHALT 9.5 MM (SIDEWALKS, DRIVES, INCIDENTALS)	13	T
	403.213	HOT MIX ASPHALT 12.5 MM BASE	500	T
	409.15	BITUMINOUS TACK COAT - APPLIED	120	G
	527.303	ENERGY ABSORBING SYSTEM (ET-PLUS)	1	EA
	534.71	PRECAST CONCRETE BOX CULVERT	1	LS
	603.16	15 INCH CULVERT PIPE OPTION I	34	LF
	603.169	15 INCH CULVERT PIPE OPTION III	141	LF
	603.179	18 INCH CULVERT PIPE OPTION III	65	LF
	604.092	CATCH BASIN TYPE BI-C	5	EA
	604.248	CATCH BASIN TYPE F6	1	EA
	605.09	6 INCH UNDERDRAIN TYPE B	189	LF
	605.10	6 INCH UNDERDRAIN OUTLET	7	LF
	605.11	12 INCH UNDERDRAIN TYPE C	226	LF
	605.12	15 INCH UNDERDRAIN TYPE C	284	LF
	606.23	GUARDRAIL TYPE 3C - SINGLE RAIL	737.5	LF
	606.231	GUARDRAIL TYPE 3C - 15 FOOT RADIUS AND LESS	25	LF
	606.232	GUARDRAIL TYPE 3C - OVER 15 FOOT RADIUS	112.5	LF
	606.259	ANCHORAGE ASSEMBLY	1	EA
	606.265	TERMINAL END - SINGLE RAIL - GALVANIZED STEEL	1	EA
	606.353	REFLECTORIZED FLEXIBLE GUARDRAIL MARKER	4	EA
	606.356	UNDERDRAIN DELINEATOR POST	3	EA
	606.47	SINGLE WOOD POST	2	EA
	607.4901	DRIVEWAY GATE - 24' DOUBLE TUBULAR	1	EA
	609.31	CURB TYPE 3	640	LF
	610.08	PLAIN RIPRAP	1692	CY
	610.09	HAND LAID RIPRAP	17.5	CY
	610.18	STONE DITCH PROTECTION	82	CY
	613.319	EROSION CONTROL BLANKET	224	SY
	613.40	TURF REINFORCEMENT MAT - (TRM)	175	SY
	615.07	LOAM	160	CY
	615.081	COMPOST BLANKET	36	CY
	618.1301	SEEDING METHOD NUMBER 1 - PLAN QUANTITY	4	UN
	618.1401	SEEDING METHOD NUMBER 2 - PLAN QUANTITY	9	UN
	618.1411	SEEDING METHOD NUMBER 3 - PLAN QUANTITY	11	UN
	618.146	SEEDING HYDROMULCH GROWTH MEDIUM	3	UN
	619.1201	MULCH - PLAN QUANTITY	24	UN
*	620.54	STABILIZATION GEOTEXTILE	175	SY
	620.58	EROSION CONTROL GEOTEXTILE	510	SY
	620.60	SEPARATION GEOTEXTILE	922	SY
	627.733	4 INCH WHITE OR YELLOW PAINTED PAVE MRK LINE	3329	LF
	627.75	WHITE OR YELLOW PAVEMENT & CURB MARKING	74	SF
	627.76	TEMPORARY PVMT. MARK LINE, W OR YELLOW	1	LS
	629.05	HAND LABOR, STRAIGHT TIME	25	HR
	631.10	AIR COMPRESSOR (INCLUDING OPERATOR)	15	HR
	631.12	ALL PURPOSE EXCAVATOR (INCLUDING OPERATOR)	15	HR
	631.172	TRUCK - LARGE (INCLUDING OPERATOR)	30	HR
	631.18	CHAIN SAW RENTAL (INCLUDING OPERATOR)	15	HR
	631.20	STUMP CHIPPER (INCLUDING OPERATOR)	20	HR
	639.19	FIELD OFFICE TYPE B	1	EA
	652.33	DRUM	27	EA
	652.34	CONE	50	EA
	652.35	CONSTRUCTION SIGNS	830	SF
	652.361	MAINTENANCE OF TRAFFIC CONTROL DEVICES	95	CD
	652.38	FLAGGER	1890	HR
	652.41	PORTABLE CHANGEABLE MESSAGE SIGN	3	EA
	656.75	TEMPORARY SOIL EROSION AND WATER POLLUTION CONTROL	1	LS
	659.10	MOBILIZATION	1	LS
	801.141	4 INCH PVC SANITARY SEWER (SDR-35)	4	LF
	801.16	6 INCH PVC SANITARY SEWER (SDR-35)	12	LF

* UNDETERMINED LOCATION

EARTHWORK SUMMARY

COMMON EXCAVATION FOR ESTIMATE

COMMON EXCAVATION (FROM CROSS SECTIONS)	4,468	
EARTH FROM DRIVES, OLD ROAD, ETC.	292	
GRUBBING IN FILL	14	
LOAM SALVAGE IN FILL	0	
UNDERCUT	0	
MUCK EXCAVATION (DREDGE MATERIAL)	252	
CULVERT INLET AND OUTLET DITCHES	0	
PAVEMENT SALVAGE IN FILL	0	
TOTAL COMMON EXCAVATION		5,026

FILL FOR BORROW CALCULATIONS

COMMON FILL (FROM CROSS SECTIONS)	146	
FILL FOR DRIVES	0	
GRUBBING IN FILL	14	
LOAM SALVAGE IN FILL	0	
UNDERCUT	0	
MUCK EXCAVATION	0	
PAVEMENT SALVAGE IN FILL	0	
TOTAL FILL		160

UNCLASSIFIED EXCAVATION FOR ESTIMATE

TOTAL COMMON EXCAVATION	5,026	
TOTAL ROCK EXCAVATION	0	
TOTAL UNCLASSIFIED EXCAVATION		5,026

AVAILABLE COMMON EXCAVATION FOR BORROW CALCULATIONS

(1) TOTAL COMMON EXCAVATION		5,026
DEDUCTIONS:		
GRUBBING IN CUT	0	
GRUBBING IN FILL	14	
LOAM SALVAGE IN CUT	0	
LOAM SALVAGE IN FILL	0	
UNDERCUT	0	
MUCK EXCAVATION (DREDGE MATERIAL)	252	
PAVEMENT SALVAGE (CUT & FILL)	660	
(2) TOTAL DEDUCTIONS		926
TOTAL AVAILABLE COMMON EXCAVATION (1) MINUS (2)		4,100
TOTAL AVAILABLE STRUCT. EXCAVATIONS (USUALLY UNDERDRAIN ONLY)		200
TOTAL AVAILABLE NON-ROCK EXCAVATION		4,300

COMPUTATION OF WASTE STORAGE & WASTE MATERIAL

GRUBBING IN CUT	0	
GRUBBING IN FILL	14	
MUCK EXCAVATION (DREDGE MATERIAL)	252	
TOTAL WASTE MATERIAL TO BE WASTED (TOTAL WASTE MATERIAL MINUS TOTAL WASTE MATERIAL TO BE UTILIZED)		266

COMPUTATION FOR COMMON BORROW FOR ESTIMATE

(3)TOTAL FILL			160
TOTAL AVAIL. NON-ROCK EXCAV.	4,300 x 0.85 =	3,655	
TOTAL AVAIL. ROCK EXCAV.	0 x 1.33 =	0	
TOTAL AVAIL. STR. ROCK EXCAV.	0 x 1.33 =	0	
TOTAL WASTE MATERIAL TO BE UTILIZED	0 x 1 =	0	
(4)TOTAL AVAILABLE EXCAVATION		=	3,655
BORROW NEEDED = TOTAL FILL MINUS TOTAL AVAILABLE EXCAVATION			-3,495

IF NO BORROW IS NEEDED, SURPLUS MATERIAL = AVAILABLE EXCAVATION MINUS TOTAL FILL, PLUS TOTAL WASTE MATERIAL TO BE WASTED 3,761

SURPLUS MATERIAL = 3761 CY

STATE OF MAINE
DEPARTMENT OF TRANSPORTATION

STP-1788(800)X

WIN 17888.00

HIGHWAY PLANS

PROJ. MANAGER	E. Merlin	BY	DATE
DESIGN-DETAILED	S. LeBlanc	J. Harden	x
CHECKED-REVIEWED	------	------	------
DESIGN2-DETAILED2	------	------	------
DESIGN3-DETAILED3	------	------	------
REVISIONS 1	------	------	------
REVISIONS 2	------	------	------
REVISIONS 3	------	------	------
REVISIONS 4	------	------	------
FIELD CHANGES	------	------	------

SIGNATURE

P.E. NUMBER

DATE

LIBERTY
INTERSECTION ROUTES 173\220

ESTIMATED QUANTITIES &
EARTHWORK SUMMARY

SHEET NUMBER

4

OF 37

Filename: ...\HIGHWAY\MSTA\004_Estimate.dgn Division: HIGHWAY Username: sarah.k.leblanc Date:9/9/2013

STATION	CULVERT PIPE											CATCH BASIN				BOX CULVERT			MH	UNDERDRAIN						ELBOWS, TEES, WYES AND INLET GRATE UNITS	REMARKS
	RCP			PVC		OPTION I		OPTION III												TYPE B		TYPE C					
								SMOOTHLINED		CORRUGATED									GAGE OR WALL THICKNESS		OUTLET	SMOOTHLINED		CORRUGATED		DESCRIPTIONS	
	SIZE	LENGTH	CLASS	SIZE	LENGTH	SIZE	LENGTH	SIZE	LENGTH	SIZE	LENGTH	A1-C	B1-C		F	SPAN	RISE	LENGTH		LENGTH	LENGTH	SIZE	LENGTH	SIZE	LENGTH		
CATCH BASINS																											
C.B. #1 22+43.86 LT															1												
C.B. #2 23+27.81 LT													1														
C.B. #3 25+00.00 LT													1														
C.B. #4 26+14.78 LT													1														REPLACE EXISTING CATCH BASIN
C.B. #5 51+91.54 RT													1														
C.B. #6 54+20.27 RT													1														
ROADWAY CULVERTS																											
C.B. #1 TO C.B. #2								15	85	18	85																
C.B. #4 TO STA. 26+14.78 RT								18	65	21	65																UD OUTLET: REPLACE EXISTING 18" CROSSPIPE
C.B. #6 TO STA. 54+71.65 RT								15	56	18	56																UD OUTLET
STA. 55+96.44 LT																4	6	70									CULVERT EXTENSION TO EXIST. 4' X 6' STONE STRUCTURE
																											REMOVE EXIST. 6' X 8' CMP
DRIVEWAY CULVERTS																											
STA. 52+76.11 LT TO STA. 53+10.74 LT						15	34																				
UNDERDRAIN																											
STA. 21+32.74 LT TO C.B. #1																				122						INCLUDES 3' ELBOW	
C.B. #2 TO C.B. #3																						15	170				
C.B. #3 TO C.B. #4																						15	114				
STA. 51+23.86 RT TO C.B. #5																				67							
C.B. #5 TO C.B. #6																						12	226				
STA. 23+93.43				4	4																						CELLAR DRAIN CONNECTION - APPROXIMATE LOCATION
STA. 23+93.43				6	12																						CELLAR DRAIN CONNECTION - APPROXIMATE LOCATION
STA. 23+93.43																					7						CELLAR DRAIN CONNECTION - APPROXIMATE LOCATION

STATE OF MAINE
DEPARTMENT OF TRANSPORTATION

STP-1788(800)X

WIN 17888.00

HIGHWAY PLANS

PROJ. MANAGER	E. Merlin	BY	DATE
DESIGN-DETAILED	S. LeBlanc	J. Harden	x
CHECKED-REVIEWED	------	------	------
DESIGN2-DETAILED2	------	------	------
DESIGN3-DETAILED3	------	------	------
REVISIONS 1	------	------	------
REVISIONS 2	------	------	------
REVISIONS 3	------	------	------
REVISIONS 4	------	------	------
FIELD CHANGES	------	------	------

SIGNATURE

P.E. NUMBER

DATE

LIBERTY
INTERSECTION ROUTES 173\220

DRAINAGE SHEET

SHEET NUMBER

5

OF 37

Filename: ...\HIGHWAY\MSTA\005_Drainage.dgn Division: HIGHWAY Username: sarah.k.leblanc Date:8/20/2013

GENERAL NOTES

1. THE UTILITIES INVOLVED IN THIS CONTRACT ARE AS FOLLOWS:
a. FAIRPOINT COMMUNICATIONS
b. CENTRAL MAINE POWER COMPANY

2. ALL UTILITY FACILITIES SHALL BE ADJUSTED BY THE RESPECTIVE UTILITIES UNLESS OTHERWISE NOTED.

3. A TEMPORARY RAMP SHALL BE CONSTRUCTED WITH HMA AT THE ENDS OF THE ROADWAY SECTION PAVED OR MILLED EACH DAY. THE USE OF MILLINGS OR RAP WILL NOT BE ALLOWED. BUT COLD PATCH MAY BE TEMPORARILY UTILIZED UNTIL HMA PLANTS ARE OPEN FOR THE SEASON.

4. TEMPORARY RAMPS SHALL BE CONSTRUCTED WITH ONE FOOT OF LENGTH FOR EVERY 1/4 IN. OF TRANSITION DEPTH ON THE LEADING AND THE TRAILING END. MATERIALS, PLACEMENT, MAINTENANCE, AND REMOVAL SHALL BE INCIDENTAL TO CONTRACT ITEMS.

5. CLEARING LIMITS SHALL BE 10' BEYOND AND PARALLEL TO THE CONSTRUCTION SLOPE LINES OR AS SHOWN ON THE PLANS UNLESS OTHERWISE AUTHORIZED BY THE RESIDENT.

6. ALL CLEARING SHALL BE CONSIDERED INCIDENTAL TO THE CONTRACT AND NO SEPARATE PAYMENT WILL BE MADE. THE ACTUAL LINES FOR CLEARING SHALL BE ESTABLISHED IN THE FIELD BY THE CONTRACTOR AS INDICATED ON THE PLANS AND APPROVED BY THE RESIDENT.

7. STUMPS HAVE BEEN ESTIMATED TO BE REMOVED UNDER ITEM 201.24 REMOVE STUMP. HOWEVER, WHERE DIRECTED BY THE RESIDENT, ITEM 631.20 STUMP CHIPPER RENTAL MAY BE USED TO REMOVE STUMPS.

8. GRUBBING IN FILL AREAS HAS BEEN SHOWN ON THE CROSS SECTIONS AND THE QUANTITIES NOTED. THESE LIMITS ARE APPROXIMATE AND HAVE BEEN USED FOR ESTIMATING PURPOSES ONLY. ACTUAL GRUBBING LIMITS MAY VARY BASED ON FIELD CONDITIONS AS DIRECTED BY THE RESIDENT. ESTIMATED GRUBBING DEPTHS ARE 6 INCHES IN FIELD AREAS AND 12 INCHES IN WOODED AREAS.

9. ALL INSLOPE AND DITCHES IN CUT AREAS SHALL BE GRADED AS SHOWN ON THE TYPICALS OR FLATTER, OR AS DIRECTED BY THE RESIDENT.

10. THE CONTRACTOR SHALL PLAN AND CONDUCT THEIR WORK ACCORDINGLY SO THAT UPON FINAL COMPLETION OF THE PROJECT THERE IS NO DROP-OFF FROM THE EDGE OF SHOULDER PAVEMENT.

11. DRIVEWAY FILL SIDE SLOPES SHALL BE THE SAME AS THE NON-GUARDRAIL FILL SLOPES UNLESS OTHERWISE NOTED ON THE PLANS.

12. ALL WASTE MATERIAL NOT USED ON THE PROJECT SHALL BE DISPOSED OF OFF THE PROJECT IN ACCEPTABLE WASTE AREAS REVIEWED BY THE RESIDENT. GRADING, SEEDING AND MULCHING OF WASTE AREAS SHALL BE CONSIDERED INCIDENTAL.

13. REQUIRED DITCH PROTECTION SHOWN ON THE PLANS OR IN THE CONSTRUCTION NOTES IS FOR ESTIMATING PURPOSES ONLY. THE ACTUAL TYPE AND LOCATION OF DITCH PROTECTION MAY BE ALTERED BY THE RESIDENT.

14. IF FOUNDATION MATERIAL IS REQUIRED UNDER CULVERTS, IT SHALL MEET THE REQUIREMENTS FOR GRANULAR BORROW - UNDERWATER BACKFILL AND WILL BE PAID FOR AS GRANULAR BORROW.

15. GRANULAR BORROW USED TO BACKFILL MUCK EXCAVATION OR IN LOW WET AREAS TO 1' ABOVE WATER LEVEL OR OLD GROUND SHALL MEET REQUIREMENTS FOR GRANULAR BORROW UNDERWATER BACKFILL.

16. EXISTING INSLOPES STEEPER THAN 2:1 IN PROPOSED FILL AREAS SHALL BE BENCHED AS DIRECTED BY THE RESIDENT.

17. RESIDENTIAL PAVED ENTRANCES SHALL BE CONSTRUCTED WITH: 2" HOT MIX ASPHALT AND 12" AGGREGATE SUBBASE COURSE GRAVEL.

18. UNPAVED ENTRANCES SHALL BE CONSTRUCTED WITH 14" AGGREGATE SUBBASE COURSE GRAVEL OR 11" AGGREGATE SUBBASE COURSE GRAVEL AND 3" UNTREATED AGGREGATE SURFACE COURSE UNLESS OTHERWISE NOTED IN THE PLANS OR DIRECTED BY THE RESIDENT.

19. CRUSHED STONE ENTRANCES SHALL BE CONSTRUCTED WITH 12" AGGREGATE SUBBASE COURSE GRAVEL AND 2" CRUSHED STONE SURFACE UNLESS OTHERWISE NOTED IN THE PLANS OR DIRECTED BY THE RESIDENT.

20. GRASSED ENTRANCES SHALL BE CONSTRUCTED WITH 12" AGGREGATE SUBBASE COURSE GRAVEL AND 2" LOAM, SEED & MULCH UNLESS OTHERWISE NOTED IN THE PLANS OR DIRECTED BY THE RESIDENT.

21. A 3' PAVED LIP SHALL BE PLACED AT ALL UNPAVED ENTRANCES UNLESS OTHERWISE NOTED IN THE PLANS OR DIRECTED BY THE RESIDENT.

22. ANY NECESSARY CLEANING OF EXISTING PAVEMENT PRIOR TO PAVING SHALL BE INCIDENTAL TO THE RELATED PAVING ITEMS.

23. WHEN SUPER ELEVATION EXCEEDS THE SLOPE OF THE LOW SIDE SHOULDER, THE SHOULDER PAVEMENT WILL HAVE SAME SLOPE AS TRAVELED WAY.

24. GRANULAR BORROW USED UNDER PIPES SHALL MEET THE REQUIREMENTS FOR UNDERWATER BACKFILL

25. NO EXISTING DRAINAGE SHALL BE ABANDONED, REMOVED OR PLUGGED WITHOUT PRIOR APPROVAL OF THE RESIDENT. REMOVAL OF EXISTING DRAINAGE PIPE AT STA. 22+43.86 IS INCIDENTAL TO COMMON EXCAVATION.

26. INLETS AND OUTLETS OF ALL CULVERTS SHALL BE RIPRAPPED UNLESS OTHERWISE NOTED ON THE PLANS OR DIRECTED BY THE RESIDENT.

27. THE CULVERT SIZES SHOWN ON THE PLANS AND CROSS SECTIONS ARE FOR SMOOTHLINED PIPES. FOR COMPARABLE CORRUGATED SIZES SEE THE DRAINAGE TABULATION.

28. A1-C AND B1-C CATCH BASINS SHALL BE SHAPE 1 WITH HAUNCHED CONE, AS PER STANDARD DETAIL 604(02), UNLESS OTHERWISE NOTED ON THE PLANS.

29. PLASTIC END CAPS SHALL BE USED ON ALL DEAD-END 6-INCH TYPE B UNDERDRAIN.

30. ANY NECESSARY CUTTING OF EXISTING PIPES TO FIT IN AREAS OF PROPOSED CATCH BASINS WILL NOT BE PAID FOR SEPARATELY AND WILL BE CONSIDERED INCIDENTAL TO ITEM 604.

31. ANY NECESSARY CUTTING OF EXISTING CATCH BASINS TO ALLOW FOR PROPOSED PIPE CONNECTIONS WILL NOT BE PAID FOR SEPARATELY AND WILL BE CONSIDERED INCIDENTAL TO ITEM 603 OR 605.

32. EXISTING ABANDONED WATER MAINS BROKEN BY THE CONTRACTOR DURING CONSTRUCTION SHALL HAVE THE ENDS PLUGGED WITH BRICK AND MORTAR. COST FOR ALL LABOR AND MATERIAL WILL BE CONSIDERED INCIDENTAL TO THE CONTRACT AND NO DIRECT PAYMENT WILL BE MADE.

33. GUARDRAIL END TREATMENTS SHALL BE INSTALLED CONCURRENTLY WITH THE PLACEMENT OF EACH SECTION OF BEAM GUARDRAIL.

34. GUARDRAIL WHICH IS REMOVED AND NOT REUSED ON THE PROJECT BECOMES PROPERTY OF THE STATE AND SHALL BE DELIVERED TO THE REGIONAL MAINTENANCE FACILITY ON ROUTE 3 IN CHINA, OR AS DIRECTED BY RESIDENT. REMOVAL, DELIVERY, DISMANTLING, AND STACKING SHALL BE INCIDENTAL TO THE GUARDRAIL ITEMS.

35. TWO REFLECTORIZED FLEXIBLE GUARDRAIL MARKERS (ITEM 606.353) WILL BE INSTALLED AT EACH GUARDRAIL END.

36. A DELINEATOR POST (ITEM 606.356) WILL BE INSTALLED AT THE END OF EACH SECTION OF BITUMINOUS CURB.

37. CONNECTIONS FOR PROPOSED GUARDRAIL TO EXISTING GUARDRAIL WILL BE CONSIDERED INCIDENTAL TO ITEM 606.

38. LOAM HAS BEEN ESTIMATED FOR DISTURBED AREAS. ACTUAL PLACEMENT OF THE LOAM SHALL BE AS NOTED ON THE PLANS OR DESIGNATED BY THE RESIDENT.

39. UNLESS OTHERWISE NOTED SEEDING METHOD NO. 1 SHALL BE UTILIZED ON ALL LAWNS AND DEVELOPED AREAS; SEEDING METHOD NO. 2 SHALL BE UTILIZED ON ALL NON-GUARDRAIL SLOPES. SEEDING METHOD NO. 3 SHALL BE UTILIZED ON ALL GUARDRAIL FILL SLOPES. ON LONG NON-GUARDRAIL BACKSLOPES, SEEDING METHOD NO. 3 MAY BE USED INSTEAD OF METHOD NO. 2 IF NOTED OR DIRECTED BY THE RESIDENT.

40. LOAM SHALL BE PLACED TO A NOMINAL DEPTH OF 4 INCHES IN LAWN AREAS AND 2 INCHES IN ALL OTHER AREAS UNLESS OTHERWISE NOTED OR DIRECTED.

41. WHITE PAVEMENT/CURB MARKING (ITEM 627.75) SHALL BE APPLIED TO BITUMINOUS CURB ENDS AT DRIVEWAY OPENINGS AS DIRECTED BY THE RESIDENT.

42. ANY BASE PAVEMENT NOT SURFACED BEFORE WINTER WILL REQUIRE TEMPORARY PAVEMENT MARKINGS OF PAINT, BOTH YELLOW CENTERLINE AND WHITE EDGE LINES AND WILL BE CONSIDERED PART OF ITEM 627.76.

43. THE CONTRACTOR WILL BE RESPONSIBLE FOR MAINTAINING ALL EXISTING MAILBOXES TO ENSURE THAT THE MAIL WILL BE DELIVERABLE. PAYMENT FOR THIS WORK WILL BE MADE UNDER THE APPROPRIATE RENTAL ITEMS.

44. THE CONTRACTOR IS RESPONSIBLE FOR THE CAREFUL SIDE STAKING OF EXISTING CENTERLINE AS PER STANDARD SPECIFICATION 105.6.2. SIDE STAKES SHALL BE PLACED SAFELY OUTSIDE OF THE CONSTRUCTION LIMITS AND THE EXISTING CENTERLINE GRADES SHALL BE TRANSFERRED TO THESE STAKES. THESE STAKES AND GRADES WILL BE USED TO LAYOUT CENTERLINE AND DETERMINE NEW CONSTRUCTION FINISH GRADES FROM DIFFERENTIAL ELEVATION SHEETS FURNISHED BY MAINEDOT. ALL LAYOUT, STAKES, AND GRADES WILL BE CHECKED AND MUST BE ACCEPTABLE TO THE RESIDENT.

45. ANY DAMAGE TO THE SLOPES CAUSED BY THE CONTRACTOR'S EQUIPMENT, PERSONNEL, OR OPERATION SHALL BE REPAIRED TO THE SATISFACTION OF THE RESIDENT. ALL WORK, EQUIPMENT, AND MATERIALS REQUIRED TO MAKE REPAIRS SHALL BE AT THE CONTRACTOR'S EXPENSE.

46. A COPY OF THE GEOTECHNICAL REPORT FOR THIS PROJECT CAN BE FOUND WITH THE PROJECT BID DOCUMENTS ON THE MAINE DEPARTMENT OF TRANSPORTATION WEBSITE OR BY CONTACTING THE PROJECT MANAGER.

47. AREAS REQUIRING FILL ON THE PROJECT WILL COME FROM SUITABLE EXCAVATION FROM EXCAVATION, DITCH AND INSLOPE OR EQUIPMENT RENTAL AREAS.

48. NO SEPARATE PAYMENT FOR SUPERINTENDENT OR FOREMAN WILL BE MADE FOR THE SUPERVISION OF EQUIPMENT BEING PAID FOR UNDER THE EQUIPMENT RENTAL ITEMS.

49. "UNDETERMINED LOCATIONS" SHALL BE DETERMINED BY THE RESIDENT.

50. STATIONS REFERENCED ARE APPROXIMATE.

51. ALL WORK SHALL BE DONE IN ACCORDANCE WITH THE MAINE DEPARTMENT OF TRANSPORTATION'S BEST MANAGEMENT PRACTICES FOR EROSION CONTROL & SEDIMENT CONTROL, FEBRUARY, 2008.

52. PAVEMENT MARKINGS SHALL BE IN ACCORDANCE WITH THE "MANUAL ON UNIFORM TRAFFIC CONTROL DEVICES FOR STREETS AND HIGHWAY" U.S.D.O.T. F.H.W.A. LATEST EDITION. PAVEMENT MARKING PAY ITEMS ARE LISTED IN THE QUANTITY SHEET.

53. THE CONTRACTOR WILL FINAL STRIPE THE PROJECT. THE CONTRACTOR IS RESPONSIBLE FOR TRANSFERRING THE EXISTING STRIPING PATTERN TO THE SURFACE COURSE.

STATE OF MAINE
DEPARTMENT OF TRANSPORTATION
STP-1788(800)X
WIN 17888.00
HIGHWAY PLANS

PROJ. MANAGER	E. Martin	BY	DATE
DESIGN-DETAILED	S. LeBlanc	J. Harden	x
CHECKED-REVIEWED	----	----	----
DESIGN2-DETAILED2	----	----	----
DESIGN3-DETAILED3	----	----	----
REVISIONS 1	----	----	----
REVISIONS 2	----	----	----
REVISIONS 3	----	----	----
REVISIONS 4	----	----	----
FIELD CHANGES	----	----	----

SIGNATURE
P.E. NUMBER
DATE

LIBERTY
INTERSECTION ROUTES 173\220
GENERAL NOTES

SHEET NUMBER
6
OF 37

Filename: ...\msta\006_GeneralNotes.dgn Division: HIGHWAY Username: sarah.k.leblanc Date:8/20/2013

CONSTRUCTION NOTES

ITEM 201.23 REMOVING SINGLE TREE-TOP ONLY

STA.	DESCRIPTION
52+83.48 LT	12" BIRCH TRIPLE
53+61.26 LT	40" ELM

ITEM 201.24 REMOVING STUMP

STA.
52+83.48 LT
53+61.26 LT

ITEM 527.303 ENERGY ABSORBING SYSTEM (ET-PLUS)

STA.	TO	STA.	LENGTH
54+00 LT	TO	54+38 LT	37.5 LF

ITEM 606.23 GUARDRAIL TYPE 3C - SINGLE RAIL

STA.	TO	STA.	LENGTH
† 20+75 RT	TO	23+19 RT	250 LF †
23+55 RT	TO	54+38 LT	150 LF
†† 54+75 RT	TO	24+19 RT	87.5 LF ††
24+54 RT	TO	27+00 RT	250 LF

GUARDRAIL SHALL BE INSTALLED WITH 7' POSTS EXCEPT OVER EXISTING STONE BOX CULVERT WHERE GUARDRAIL MAY BE INSTALLED WITH 6' POSTS

ITEM 606.231 GUARDRAIL TYPE 3C - 15 FT RADIUS OR LESS

STA.	TO	STA.	LENGTH	RADIUS
54+59 RT	TO	54+75 RT	25 LF	15 FT

ITEM 606.232 GUARDRAIL TYPE 3C - OVER 15 FT RADIUS

STA.	TO	STA.	LENGTH	RADIUS
23+19 RT	TO	23+55 RT	50 LF	40 FT
24+19 RT	TO	24+21 RT	12.5 LF	50 FT
24+21 RT	TO	24+55 RT	50 LF	35 FT

† STA. 20+75.00 RT AT GUARDRAIL TRANSITION REMOVE WHOLE BEAM, AS DIRECTED BY RESIDENT. GUARDRAIL TERMINAL LOCATION AT STA. 54+38.00 LT COULD BE SHIFTED AWAY FROM PAVED ENTRANCE UP TO 12.5 FT.

†† STA. 27+00.00 RT AT GUARDRAIL TRANSITION REMOVE WHOLE BEAM, AS DIRECTED BY RESIDENT. GUARDRAIL TERMINAL LOCATION AT STA. 54+75.00 RT COULD BE SHIFTED AWAY FROM FIELD ENTRANCE UP TO 12.5 FT.

ITEM 606.259 ANCHORAGE ASSEMBLY

STA.	QUANTITY
54+59 RT	1

ITEM 606.265 TERMINAL END - SINGLE RAIL - GALVANIZED STEEL

STA.	QUANTITY
54+59 RT	1

ITEM 606.353 REFLEXORIZED FLEXIBLE GUARDRAIL MARKER

STA.	QUANTITY
54+59 RT	1
54+75 RT	1
54+00 LT	1
54+38 LT	1

ITEM 606.47 SINGLE WOOD POST

STA.	QUANTITY
22+24.28 LT	1
51+27.40 RT	1

ITEM 607.4901 DOUBLE TUBULAR DRIVEWAY GATE - 24'

STA.	TO	STA.	OFFSET
53+71 LT		53+95 LT	21 FT

DRIVEWAY GATE SHALL NOT BE LESS THAN 10 FT FROM EDGE OF TRAVELWAY

ITEM 609.31 CURB TYPE 3 MOLD 2

STA.	TO	STA.	LENGTH
23+14.07 LT	TO	25+05.00 LT	193 LF
* 51+23.86 RT	TO	51+60.53 RT	37 LF *
51+86.54 RT	TO	54+25.40 RT	215 LF
* 55+77.98 RT	TO	25+95.37 RT	195 LF *

* 4 INCH REVEAL

ITEM 610.08 PLAIN RIPRAP

STA.	TO	STA.	VOLUME
21+25.00 RT	TO	55+61.00 LT	200 CY
23+00.00 RT	TO	23+50.00 RT	20 CY
25+94.33 RT	TO	26+11.53 RT	11 CY
		26+14.63 RT	6 CY
		54+71.65 RT	5 CY
** 55+14.23 LT	TO	56+00 LT	1450 CY **

** UNDER WATER QUANTITY MAY BE MEASURED BY TRUCK LOAD COUNT WITH NO REDUCTION IN VOLUME

ITEM 610.09 HAND LAID RIPRAP

STA.	TO	STA.	VOLUME
		22+43.87 LT	1.5 CY
24+33.16 RT	TO	24+56.60 RT	6.0 CY
24+68.06 RT	TO	24+84.20 RT	8.5 CY
		26+14.63 LT	1.5 CY

ITEM 610.18 STONE DITCH PROTECTION

STA.	TO	STA.	VOLUME
51+24.03 LT	TO	52+78.19 LT	35 CY
53+06.83 LT	TO	55+13.31 LT	47 CY

ITEM 613.319 EROSION CONTROL BLANKET

STA.	TO	STA.	AREA
21+75.00 LT	TO	23+12.45 LT	64 SY
23+14.07 LT	TO	26+50 LT	160 SY

ITEM 613.40 TURF REINFORCEMENT MAT (TRM)

STA.	TO	STA.	AREA
24+76.66 RT	TO	26+00.42 RT	174 SY

ITEM 615.081 COMPOST BLANKET

STA.	TO	STA.	VOLUME
21+25.00 RT	TO	55+61.00 LT	17 CY
24+76.66 RT	TO	26+00.42 RT	19 CY

ITEM 618.146 SEEDING HYDROMULCH MEDIUM

STA.	TO	STA.	UNITS
21+25.00 RT	TO	55+61.00 LT	1.5 CY
24+76.66 RT	TO	26+00.42 RT	1.5 CY

ITEM 620.54 STABALIZATION GEOTEXTILE

STA.	AREA
UNSPECIFIED LOCATIONS	175 SY

ITEM 620.58 EROSION CONTROL GEOTEXTILE

STA.	TO	STA.	AREA
21+25 RT	TO	23+00 RT	278 CY
		22+43.87 LT	1 CY
25+94.33 RT	TO	26+11.53 RT	21 CY
		26+14.63 RT	11 CY
		26+14.63 LT	1 CY
24+33.16 RT	TO	24+56.60 RT	13 CY
24+68.06 RT	TO	24+84.20 RT	17 CY
		52+74.75 LT	9 CY
		54+71.65 RT	10 CY
53+06.83 LT	TO	55+13.31 LT	149 CY

ITEM 620.60 SEPARATION GEOTEXTILE

STA.	TO	STA.	AREA
55+14.23 LT	TO	56+00 LT	922 SY

TO BE PLACED AT EL 510' BETWEEN CRUSHED STONE AND GRAVEL BORROW, EXCEPT WHERE THE GEOTEXTILE WILL BE PLACED BELOW SUBGRADE OF ACCESS ROAD

DRIVES AND ENTRANCES

STA.		DESCRIPTION	OPENING
21+52.49	LT	GRAVEL	45.1 FT
22+73.35	LT	GRAVEL	98.1 FT
51+10.85	RT	GRAVEL	26.0 FT
51+74.18	RT	FIELD	26.0 FT
52+93.73	LT	FIELD	45.4 FT
53+05.98	RT	GRAVEL	26.0 FT
53+79.54	LT	PAVED	36.0 FT
54+38.70	RT	FIELD	26.0 FT

STATE OF MAINE
DEPARTMENT OF TRANSPORTATION

STP-1788(800)X

WIN 17888.00

HIGHWAY PLANS

		BY	DATE
PROJ. MANAGER	E. Merlen		
DESIGN-DETAILED	S. LeBlanc	J. Harden	x
CHECKED-REVIEWED			
DESIGN2-DETAILED2			
DESIGN3-DETAILED3			
REVISIONS 1			
REVISIONS 2			
REVISIONS 3			
REVISIONS 4			
FIELD CHANGES			

SIGNATURE

P.E. NUMBER

DATE

LIBERTY
INTERSECTION ROUTES 173\220

CONSTRUCTION NOTES

SHEET NUMBER

7

OF 37

Filename: ...\007_Construction Notes.dgn Division: HIGHWAY Username: sarah.k.leblanc Date:9/4/2013

BOX CULVERT EXTENSION EXCAVATION

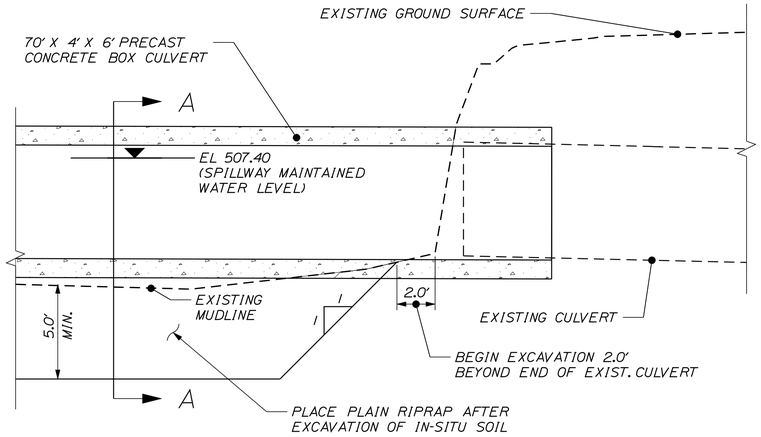

PROFILE ALONG CENTERLINE OF BOX CULVERT EXTENSION

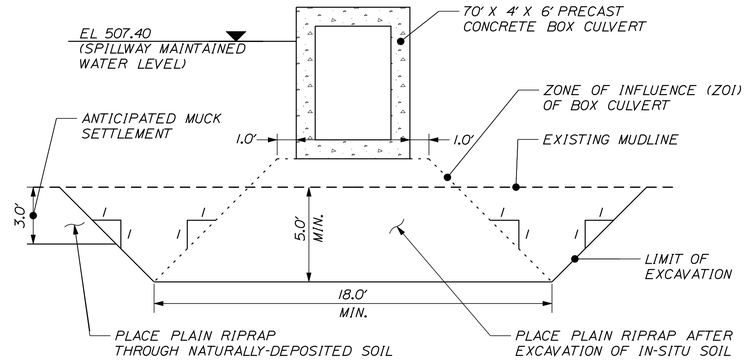

SECTION A-A

NOTES:

1. OVER-EXCAVATION WITHIN THE ZONE OF INFLUENCE (ZOI) OF THE NEW BOX CULVERT IS REQUIRED TO REMOVE SOFT, ORGANIC LAKE BOTTOM SEDIMENTS PRESENT AT THE SITE. IF DURING EXCAVATION, THE THICKNESS OF THE LAKE BOTTOM SEDIMENTS IS FOUND TO BE LESS THAN 5 FT AS CONFIRMED BY THE RESIDENT, THE FULL 5 FT OVER-EXCAVATION DEPTH MAY NOT BE NEEDED AS DIRECTED BY THE RESIDENT. IF THE LAKE BOTTOM SEDIMENTS ARE FOUND TO BE THICKER THAN 5 FT AS CONFIRMED BY THE RESIDENT, OVER-EXCAVATION WILL CONTINUE UNTIL THE SEDIMENTS ARE COMPLETELY REMOVED TO THE SATISFACTION OF THE RESIDENT.

2. THE CONTRACTOR SHALL PLACE PLAIN RIPRAP BELOW THE INVERT ELEVATION OF THE PROPOSED BOX CULVERT EXTENSION IN THE FOLLOWING SEQUENCE:

A. PRIOR TO THE START OF WORK, ERECT TURBIDITY CURTAIN ON THE UPSTREAM (WATER) SIDE OF RT. 220, OUTSIDE THE LIMITS OF WORK.

B. EXCAVATE NATURALLY-DEPOSITED SOILS FROM WITHIN THE ZONE OF INFLUENCE (ZOI) OF THE NEW CULVERT AND BACKFILL WITH PLAIN RIPRAP TO AT LEAST 1 FT ABOVE ORIGINAL MUDLINE.

C. PLACE PLAIN RIPRAP DIRECTLY ON TOP OF THE NATURALLY-DEPOSITED SOILS OUTSIDE OF THE ZOI OF THE NEW CULVERT.

PROPOSED CULVERT OUTLET PLUNGE POOL STA. 54+71.65 RT
PROFILE ALONG OUTLET PIPE CENTERLINE

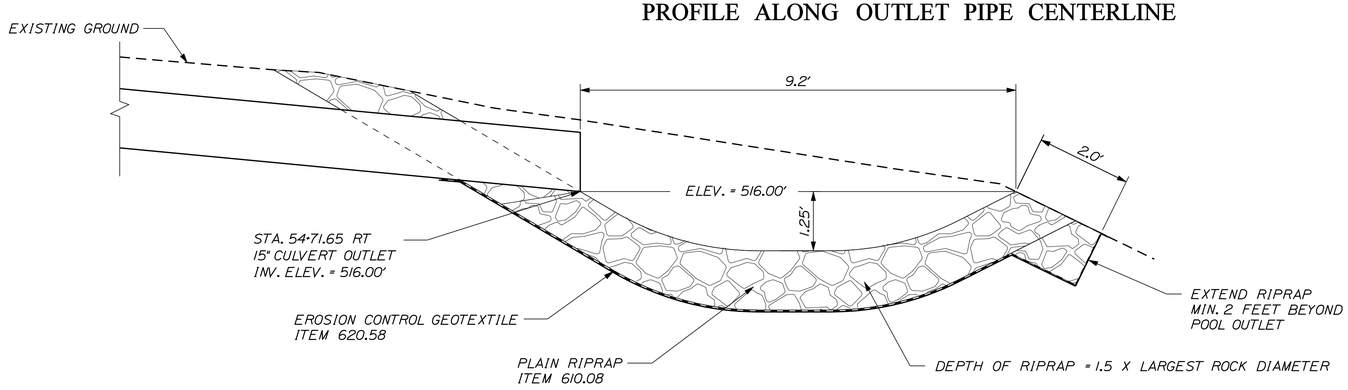

NOTES:

1. REFER TO BMP 802(09) - ENERGY DISSIPATOR - PLUNGE POOL FOR INSTALLATION DETAILS.

2. RIPRAP SHALL BE ACCORDING TO MATERIALS SPECIFICATION 703.26 - PLAIN RIPRAP.

3. RIPRAP SHALL BE UNDERLAIN WITH NON-WOVEN GEOTEXTILE ACCORDING TO MATERIALS SPECIFICATION 722.03 - EROSION CONTROL GEOTEXTILE.

CELLAR DRAIN CONNECTION DETAIL: UNDERDRAIN SECTION

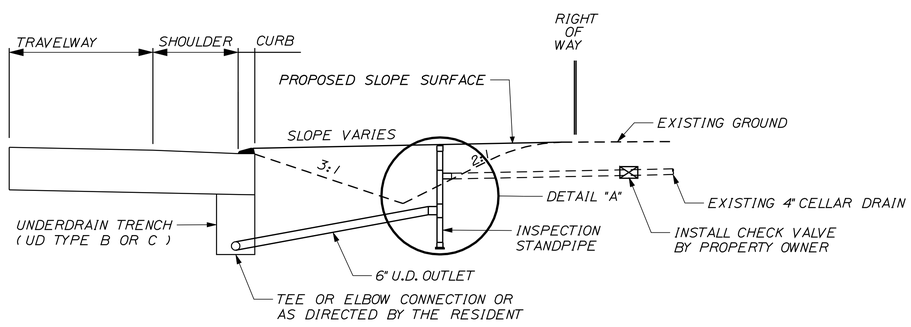

KNOWN LOCATIONS

STATION	OFFSET	DESCRIPTION
23+93.43 LT	FIELD FIT	APPROX. LOC.

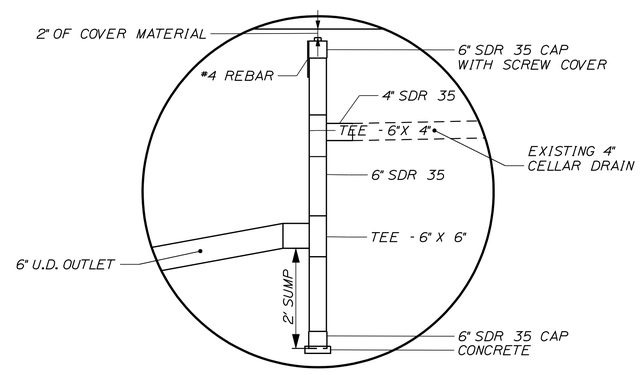

DETAIL "A"
INSPECTION STANDPIPE

NOTES:

1. PAYMENT FOR CONNECTION FROM THE INSPECTION STANDPIPE TO THE PROPOSED UNDERDRAIN SYSTEM SHALL BE A 6 INCH UNDERDRAIN OUTLET. ITEM NO. 605.10, OR AS DIRECTED BY THE RESIDENT.

2. INSPECTION STANDPIPE SHALL HAVE A SOLID COVER AND BE INSTALLED WITHIN THE STATE'S RIGHT OF WAY.

3. A CHECK VALVE TO PREVENT BACK FLOW TO PROPERTY MAY BE INSTALLED. CHECK VALVE SHOULD BE INSTALLED AT THE UPSTREAM SIDE OF THE CATCH BASIN AND OUTSIDE OF THE STATE'S RIGHT OF WAY. INSTALLATION OF CHECK VALVE SHALL BE THE RESPONSIBILITY OF THE PROPERTY OWNER.

4. PAYMENT FOR CONNECTION OF THE EXISTING CELLAR DRAIN TO THE INSPECTION STANDPIPE SHALL BE INCIDENTAL TO THE ITEM NO. 801.141 OR 801.16.

5. THE STATION LOCATIONS MAY BE CHANGED TO FIT FIELD CONDITIONS, AS DIRECTED BY THE RESIDENT.

6. A 3' LENGTH OF #4 REBAR SHALL BE PLACED ADJACENT TO STANDPIPE AND FLUSH WITH CAP. INSTALLATION OF THE REBAR SHALL BE INCIDENTAL TO ITEM NO. 801.141 OR 801.16.

7. INVERTS AND SLOPES OF PIPES SHALL BE INSTALLED AS DIRECTED BY THE RESIDENT IN THE FIELD.

NOT TO SCALE

STATE OF MAINE
DEPARTMENT OF TRANSPORTATION

STP-1788(800)X

WIN 17888.00

HIGHWAY PLANS

	BY	DATE
PROJ. MANAGER	E. Merlin	
DESIGN-DETAILED	S. LeBlanc	x
CHECKED-REVIEWED	------	------
DESIGN2-DETAILED2	------	------
DESIGN3-DETAILED3	------	------
REVISIONS 1	------	------
REVISIONS 2	------	------
REVISIONS 3	------	------
REVISIONS 4	------	------
FIELD CHANGES	------	------

SIGNATURE

P.E. NUMBER

DATE

LIBERTY
INTERSECTION ROUTES 173\220

SPECIAL DETAILS

SHEET NUMBER

8

OF 37

Filename: ...\MSTA\008_SpecialDetails.dgn Division: HIGHWAY Username: sarah.k.leblanc Date:9/9/2013

WORKPOINT	STATION	OFFSET
W.P.#1	55+80.84	67.67' (L)
W.P.#2	55+96.53	00.35' (R)

NOTE:
WORKPOINT STATIONS AND OFFSETS ARE APPROXIMATE. FINAL CULVERT LOCATION TO BE DETERMINED BY DOT.

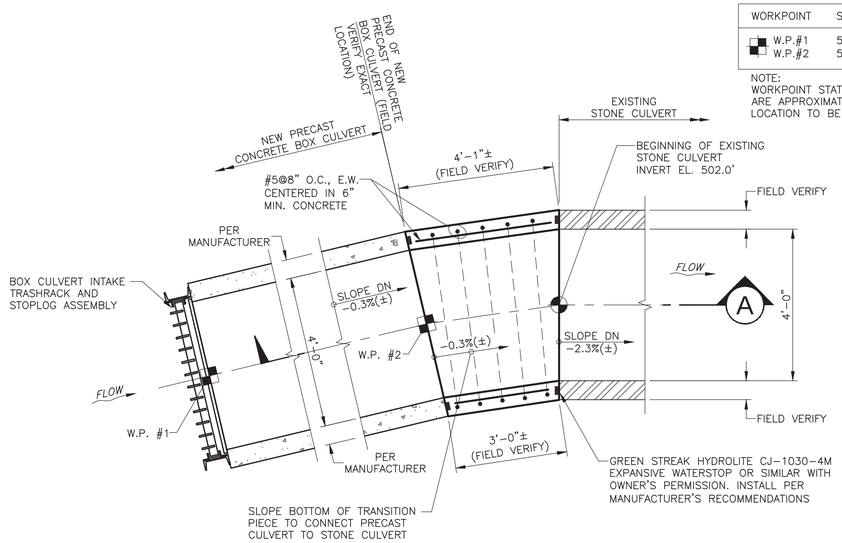

TRANSITION PLAN VIEW
1/2"= 1'-0"

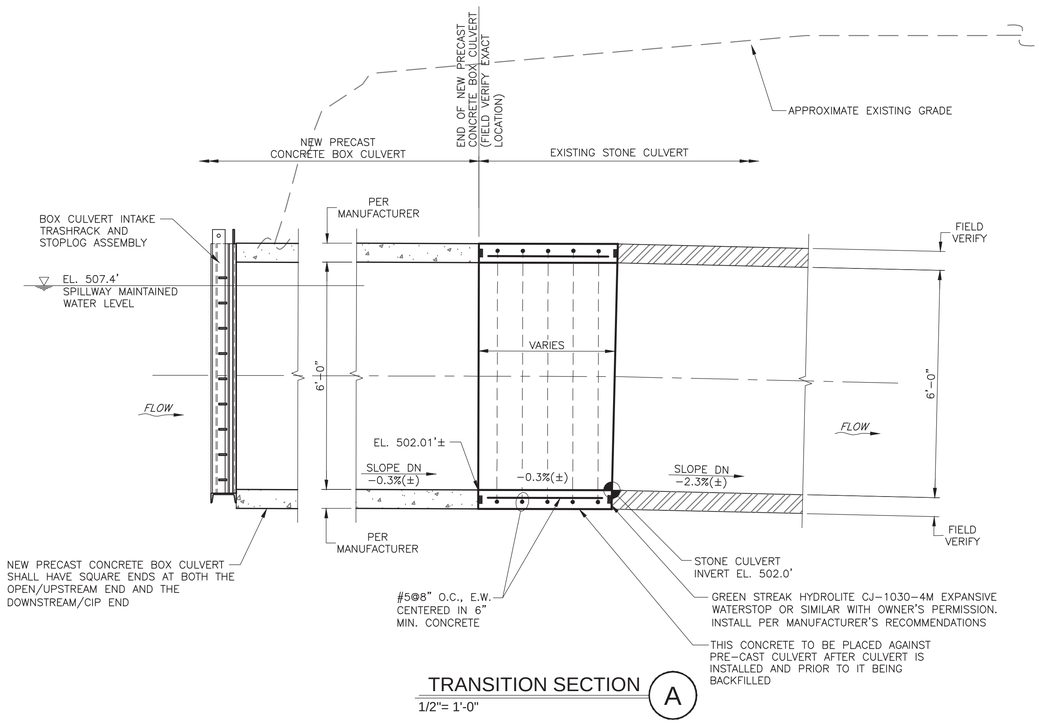

TRANSITION SECTION (A)
1/2"= 1'-0"

GENERAL STEEL NOTES

1. CONTRACTOR SHALL CONFIRM ALL EXISTING DIMENSIONS IN THE FIELD.
2. CONTRACTOR SHALL SUBMIT SHOP DRAWINGS FOR OWNER REVIEW PRIOR TO FABRICATION AND INSTALLATION.
3. WHERE DIMENSIONS ARE NOT SHOWN, CONTACT ENGINEER FOR CLARIFICATION. VERIFY DIMENSIONS PRIOR TO START OF WORK.
4. CONNECTIONS SHALL BE SHOP WELDED AND FIELD BOLTED UNLESS NOTED OTHERWISE.
5. BOLTED CONNECTIONS SHALL HAVE A MINIMUM BOLT SIZE OF 3/4" DIA BOLTS AND 12" MINIMUM SPACING UNLESS NOTED OTHERWISE.
6. MATERIAL PROPERTIES:
   - A. STEEL BARS, PLATES, ANGLES AND CHANNELS AND OTHER SHAPES UNLESS NOTED OTHERWISE – ASTM A36.
   - B. BOLTS – 3/4" ASTM A325 GALV. ALL CONNECTIONS OF STRUCTURAL MEMBERS.
   - C. ANCHOR ROD – F1554 GR. 36 HOT-DIPPED GALVANIZED.
   - D. PIPING – ASTM A53, GRADE B.
   - E. STRUCTURAL TUBING – HSS RECTANGULAR – ASTM A500 GR 46; HSS ROUND ASTM A500 GRADE 42.
   - F. WELD – PER AWS D1.1 MATCHING ELECTRODES TO STRENGTH OF BASE METALS.
7. STEEL COATINGS:
   - A. ALL BOLTS AND HARDWARE ARE TO BE HOT DIPPED GALVANIZED ASTM A153.
   - B. ALL NEW STEEL SHALL BE HOT DIPPED GALVANIZED ASTM A123.

CONCRETE NOTES FOR CIP CONCRETE

(SEE SPECIAL PROVISION FOR PRE-CAST COMPONENTS)

1. WHERE DIMENSIONS ARE NOT SHOWN, CONTACT ENGINEER FOR CLARIFICATION. VERIFY DIMENSIONS PRIOR TO START OF WORK.
2. SURFACE PREPARATION:
   - A. ALL LOOSE ROCK, CONCRETE, AND SOIL SHALL BE REMOVED PRIOR TO CONSTRUCTION. REMOVE ANY GREASE, OIL OR OTHER COATINGS ON ANY EXISTING SURFACE.
   - B. WHEN CONCRETE IS PLACED DIRECTLY AGAINST ROCK SURFACES, THE SURFACE SHALL BE CLEANED WITH HIGH-PRESSURE WATER TO REMOVE ALL DIRT OR LOOSE MATERIAL.
   - C. SURFACE PREPARATION OF EXISTING CONCRETE AND MASONRY SURFACES SHALL REMOVE ALL LOOSE OR DETERIORATED MATERIAL AND VEGETATION. ACCEPTABLE METHODS INCLUDE SANDBLASTING, MECHANICAL CHIPPING, OR HIGH-PRESSURE WATER BLAST.
3. CONCRETE:
   - A. ALL WORK SHALL CONFORM TO ACI 318, ACI 301 AND ACI 347, LATEST EDITIONS.
   - B. SPECIFICATIONS:
     - I. MINIMUM 28 DAY STRENGTH = 4000 PSI.
     - II. MAXIMUM WATER/CEMENT RATIO = 0.45.
     - III. SLUMP 3" TO 4".
     - IV. AIR CONTENT PROVIDED BY AIR ENTRAINMENT ADMIXTURE 5 % TO 7% AS MEASURES BY ASTM C231.
     - V. WATER REDUCING ADMIXTURE SHALL BE USED AT THE OPTION OF THE CONTRACTOR.
     - VI. FLYASH SHALL BE USED. ADMIXTURES CONTAINING CALCIUM CHLORIDE SHALL NOT BE USED.
   - C. DO NOT PLACE CONCRETE AGAINST ACTIVE LEAKS OR SEAMS WITH FLOWING WATER. STOP FLOW OR INSTALL DRAINAGE TO DIVERT FLOW AWAY FROM FRESH CONCRETE.
   - D. DO NOT BACKFILL CONCRETE TRANSITION PIECE UNTIL IT HAS ACHIEVED 3000 PSI MINIMUM STRENGTH AND CONCRETE HAS CURED FOR AT LEAST 2 DAYS.
4. REINFORCEMENT:
   - A. ASTM A615 GRADE 60.
   - B. FIELD BEND REINFORCING BARS TO CLEAR BOXOUTS AND PIPES WHERE REQUIRED. NO CUTTING OF REINFORCEMENT BARS SHALL BE DONE WITHOUT PRIOR APPROVAL OF ENGINEER.
     - I. SPLICES: SPLICES SHALL BE ACI CLASS B UNLESS NOTED OTHERWISE.
     - II. DOWELS: PROVIDE DOWELS OF SIZE AND DIMENSION SHOWN. CLEAN DRILL HOLES WITH AIR PRESSURE TO REMOVE DUST AND STANDING WATER. HOLES MAY BE DAMP. GROUT SHALL BE NON-SHRINK PROPRIETARY CEMENT GROUT (4,000 PSI MINIMUM), OR EPOXY, AT CONTRACTOR'S OPTION. SELECTED GROUT MUST BE SUITABLE FOR USE IN WET HOLES. INSTALL PER MANUFACTURER'S INSTRUCTIONS. ENSURE THAT HOLES ARE COMPLETELY FILLED WITH GROUT. WHERE SURFACES ARE VERTICAL, INSTALL DOWELS WITH SLOPE DOWNHILL OR USING MANUFACTURER'S STANDARD HOLE STOPPER AND INJECTION SYSTEM.

CONCRETE NOTES (CONT'D)

4. REINFORCEMENT (CONT'D):
   - III. HOOKS: HOOKS IN BARS SHALL BE DIMENSIONED AND BENT PER ACI STANDARD HOOKS.
   - IV. REBAR COVER: 2.5" OR AS NOTED.
   - V. CONCRETE ANCHORS: HILTI "HAS" ADHESIVE ANCHOR OR APPROVED EQUAL. INSTALL TO THE DEEPER OF THE DEPTH SHOWN ON THE DRAWINGS OR THE MANUFACTURERS MINIMUM RECOMMEND DEPTH.
   - VI. CONTRACTOR MAY PROPOSE ADDITIONAL SPLICE LOCATIONS TO BE APPROVED BY OWNER.
5. FORMWORK AND CONSTRUCTION JOINTS:
   - A. CONSTRUCT FORMS TRUE TO LINE AND GRADE, ADEQUATELY BRACED TO MAINTAIN POSITION DURING PLACEMENT OF CONCRETE. WELDING OF FORM TIES TO STRUCTURAL DOWELS IS NOT PERMITTED, THOUGH ADDITIONAL DOWELS MAY BE INSTALLED FOR THAT PURPOSE.
   - B. PROVIDE CHAMFER TO MATCH PRECAST CULVERT.
   - C. REPAIR ALL AIR HOLES AND VOIDS LARGER THAN 1/4" AND FILL ALL TIE HOLES. REMOVE FINS AND PROJECTIONS.
   - D. CONSTRUCTION JOINTS SHOWN SHALL BE LOCATED AS SHOWN UNLESS OTHERWISE APPROVED BY THE ENGINEER. ADDITIONAL JOINTS MAY BE USED, WHERE THE STRENGTH AND DURABILITY OF THE STRUCTURE IS NOT AFFECTED AND ARE SUBJECT TO THE REVIEW OF THE ENGINEER. IF CONTRACTOR PROPOSES CONSTRUCTION JOINT LOCATIONS DIFFERENT FROM THOSE SHOWN ON DRAWINGS, CONTRACTOR SHALL SUBMIT LOCATION OF ANY PROPOSED CONSTRUCTION JOINT TO ENGINEER FOR REVIEW.
   - E. REINFORCEMENT SHALL BE CONTINUOUS THRU JOINT, UNLESS NOTED OTHERWISE AND BE FULLY DEVELOPED ON BOTH SIDE OF CONSTRUCTION JOINTS.
   - F. CLEAN ALL JOINTS TO REMOVE LAITANCE WITH MIN. 1500 PSI WATER BLAST OR SANDBLASTING PRIOR TO NEXT CONCRETE PLACEMENT. MECHANICAL ROUGHENING IS AN ACCEPTABLE ALTERNATE FOR LAITANCE REMOVAL. ACID CLEANING/REMOVAL OF LAITANCE IS NOT ACCEPTABLE.
   - G. SATURATE JOINT IMMEDIATELY PRECEDING AND 12 HOURS PRIOR TO NEXT CONCRETE PLACEMENT. REMOVE ALL STANDING WATER.
6. VERTICAL CONCRETE SURFACES SHALL HAVE A SMOOTH FORMED FINISH. HORIZONTAL CONCRETE SURFACES SHALL HAVE A SMOOTH RUBBED FINISH (U.N.O.),
7. WATERSTOPS, SEE DETAILS AND NOTES ON DRAWING.

ADDITIONAL NOTES:
1.) REMOVE EXISTING 6'x8' CMP AS DIRECTED BY THE RESIDENT.
2.) ANY DAMAGE TO THE EXISTING STONE CULVERT AS THE RESULT OF THE WORK, SHALL BE REPAIRED BY THE CONTRACTOR AT NO ADDITIONAL COST TO THE DEPARTMENT.

Kleinschmidt

STATE OF MAINE
DEPARTMENT OF TRANSPORTATION

APPROVED | DATE
COMMISSIONER:
CHIEF ENGINEER:

STATE OF MAINE KEVIN J. COOLEY 9981 LICENSED PROFESSIONAL ENGINEER

SIGNATURE
P.E. NUMBER
DATE: 09/03/13

PROJECT INFORMATION
PROGRAM
PROJECT MANAGER
DESIGNER
CONSULTANT
PROJECT RESIDENT
CONTRACTOR
PROJECT COMPLETION DATE

LIBERTY
INTERSECTION ROUTES 173/220

NEW TO EXISTING CULVERT
TRANSITION AND GENERAL NOTES

SHEET NUMBER
9
OF 37

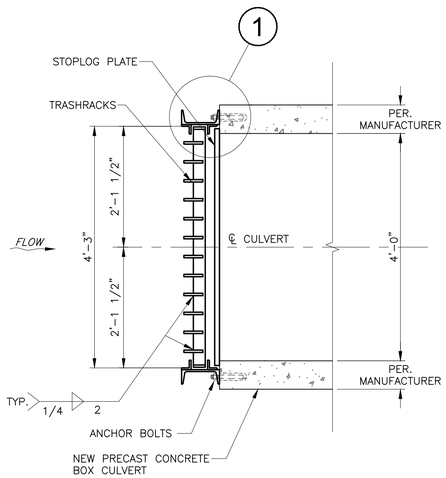

PLAN VIEW
□/□"= 1'-0"

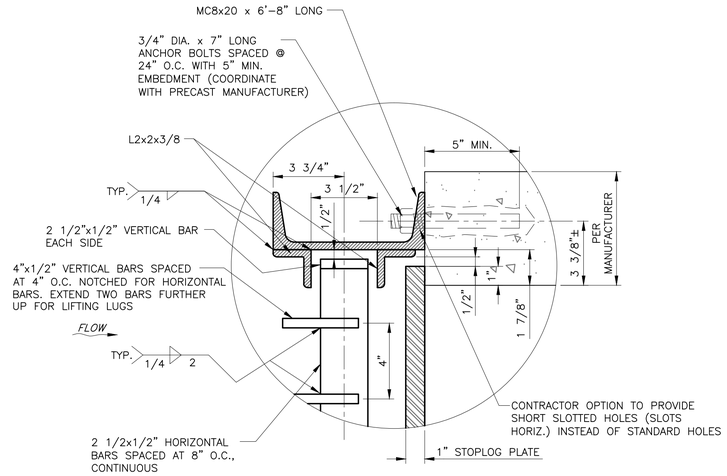

DETAIL 1
□"= 1'-0"

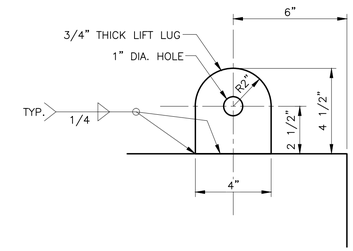

DETAIL 2
□"= 1'-0"

LIFTING LUG SHOWN IS FOR STOPLOG PLATE. TRASHRACK LIFTING LUG SIMILAR.

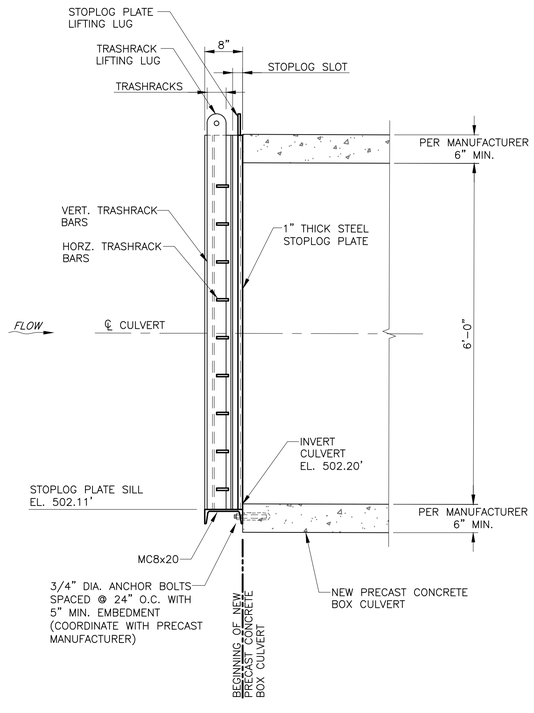

SECTION T□RO□G□ CENTERLINE
□/□"= 1'-0"

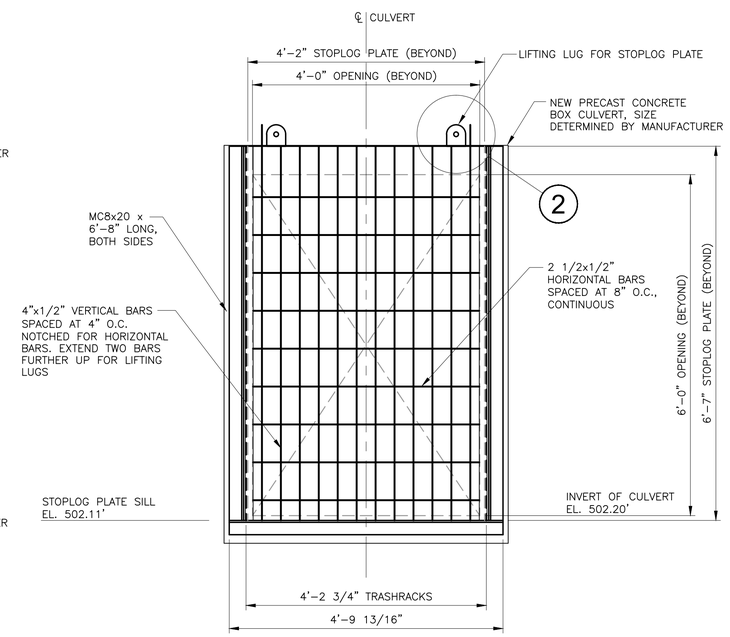

ELEVATION LOO□ING DOWNSTREA□
□/□"= 1'-0"

NOTES:
1.) ALL TRASHRACK STEEL AND ASSOCIATED HARDWARE SHALL BE GALVANIZED.

Kleinschmidt

STATE OF MAINE
DEPARTMENT OF TRANSPORTATION

APPROVED | DATE
COMMISSIONER:
CHIEF ENGINEER:

STATE OF MAINE KEVIN J. COOLEY 9981 LICENSED PROFESSIONAL ENGINEER

SIGNATURE
P.E. NUMBER
DATE: 09/03/13

PROJECT INFORMATION
PROGRAM
PROJECT MANAGER
DESIGNER
CONSULTANT
PROJECT RESIDENT
CONTRACTOR
PROJECT COMPLETION DATE

LIBERTY
INTERSECTION ROUTES 173/220
TRASHRACK & STOPLOG STRUCTURE

SHEET NUMBER
10
OF 37

Filename: ...\MSTA\011_BORING LOGS1.dgn Division: HIGHWAY Username: sarah.k.leblanc Date:8/20/2013

Maine Department of Transportation — Soil/Rock Exploration Log — US CUSTOMARY UNITS

Project: Intersection Routes 173/220
Location: Liberty, Maine
Boring No.: HB-LIB-101
WIN: 17888.00

Driller:	MaineDOT	Elevation (ft.)	516.8	Auger ID/OD:	N/A
Operator:	Giguere/Giles	Datum:	NAVD88	Sampler:	Standard Split Spoon
Logged By:	K. Breskin	Rig Type:	CME 45C	Hammer Wt./Fall:	140#/30"
Date Start/Finish:	9/28/11-9/28/11	Drilling Method:	Hollow Stem Auger	Core Barrel:	N/A
Boring Location:	54+91.5, 9.1 ft Rt.	Casing ID/OD:	N/A	Water Level*:	None Observed
Hammer Efficiency Factor: 0.84		Hammer Type:	Automatic ☒ Hydraulic ☐	Rope & Cathead ☐	

Definitions: D = Split Spoon Sample; MD = Unsuccessful Split Spoon Sample attempt; U = Thin Wall Tube Sample; MU = Unsuccessful Thin Wall Tube Sample attempt; V = Insitu Vane Shear Test, PP = Pocket Penetrometer; MV = Unsuccessful Insitu Vane Shear Test attempt; R = Rock Core Sample; SSA = Split Spoon Sample; HSA = Hollow Stem Auger; RC = Roller Cone; WOH = weight of 140lb. hammer; WOR/C = weight of rods or casing; WO1P = Weight of one person; S_u = Insitu Field Vane Shear Strength (psf); T_v = Pocket Torvane Shear Strength (psf); q_p = Unconfined Compressive Strength (ksf); N-uncorrected = Raw Field SPT N-value; Hammer Efficiency Factor = Annual Calibration Value; N_{60} = SPT N-uncorrected corrected for hammer efficiency; N_{60} = (Hammer Efficiency Factor/60%)*N-uncorrected; $S_{u(lab)}$ = Lab Vane Shear Strength (psf); WC = water content, percent; LL = Liquid Limit; PL = Plastic Limit; PI = Plasticity Index; G = Grain Size Analysis; C = Consolidation Test

Depth (ft.)	Sample No.	Pen./Rec. (in.)	Sample Depth (ft.)	Blows (/6 in.) Shear Strength (psf) or RQD (%)	N-uncorrected	N_{60}	Casing Blows	Elevation (ft.)	Visual Description and Remarks	Laboratory Testing Results/ AASHTO and Unified Class
0							SSA	516.13	8" HMA. 0.67	
	10	24/6	1.00 - 3.00	7/9/5/4	14	20			Brown, damp, medium dense, sandy GRAVEL, some silt.	
5	20	24/17	5.00 - 7.00	3/3/3/4	6	8			Brown, moist, loose, silty SAND.	
10	30	24/20	10.00 - 12.00	4/9/26/12	35	49			Brown, moist, medium dense, silty SAND, some stones.	
15	40	24/24	15.00 - 17.00	11/13/15/18	28	39			Brown, saturated, medium dense, silty SAND, little stones, layers of wood.	
20	50	8.4/7	20.00 - 20.70	21/50(2")	---			496.10	Brown, saturated, medium dense, SAND, some silt. 20.70 Bottom of Exploration at 20.70 feet below ground surface. SPOON REFUSAL	

Remarks:

Stratification lines represent approximate boundaries between soil types; transitions may be gradual.

* Water level readings have been made at times and under conditions stated. Groundwater fluctuations may occur due to conditions other than those present at the time measurements were made.

Page 1 of 1 — Boring No.: HB-LIB-101

Maine Department of Transportation — Soil/Rock Exploration Log — US CUSTOMARY UNITS

Project: Intersection Routes 173/220
Location: Liberty, Maine
Boring No.: HB-LIB-102
WIN: 17888.00

Driller:	MaineDOT	Elevation (ft.)	514.9	Auger ID/OD:	5" Dia.
Operator:	Giguere/Giles	Datum:	NAVD88	Sampler:	N/A
Logged By:	K. Breskin	Rig Type:	CME 45C	Hammer Wt./Fall:	N/A
Date Start/Finish:	9/28/11-9/28/11	Drilling Method:	Solid Stem Auger	Core Barrel:	N/A
Boring Location:	55+21.3, 9.3 ft Rt.	Casing ID/OD:	N/A	Water Level*:	None Observed
Hammer Efficiency Factor: 0.84		Hammer Type:	Automatic ☒ Hydraulic ☐	Rope & Cathead ☐	

Depth (ft.)	Sample No.	Pen./Rec. (in.)	Sample Depth (ft.)	Blows (/6 in.) Shear Strength (psf) or RQD (%)	N-uncorrected	N_{60}	Casing Blows	Elevation (ft.)	Visual Description and Remarks	Laboratory Testing Results/ AASHTO and Unified Class
0							SSA	514.40	6" HMA. 0.50	
5	MD	24/0	5.00 - 7.00	Not Recorded	---				Brown, moist, silty SAND, breaking rock grindings. Sample from auger flight. Roller Coned ahead to 6.5 ft bgs.	
								508.40	6.50 Bottom of Exploration at 6.50 feet below ground surface. ABANDONED HOLE, moved to HB-LIB-102A	

Remarks:

Stratification lines represent approximate boundaries between soil types; transitions may be gradual.

* Water level readings have been made at times and under conditions stated. Groundwater fluctuations may occur due to conditions other than those present at the time measurements were made.

Page 1 of 1 — Boring No.: HB-LIB-102

Maine Department of Transportation — Soil/Rock Exploration Log — US CUSTOMARY UNITS

Project: Intersection Routes 173/220
Location: Liberty, Maine
Boring No.: HB-LIB-102A
WIN: 17888.00

Driller:	MaineDOT	Elevation (ft.)	515.0	Auger ID/OD:	5" Dia Solid Stem
Operator:	Giguere/Giles	Datum:	NAVD88	Sampler:	Standard Split Spoon
Logged By:	K. Breskin	Rig Type:	CME 45C	Hammer Wt./Fall:	140#/30"
Date Start/Finish:	9/28/11-9/29/11	Drilling Method:	Cased Wash Boring	Core Barrel:	NQ-2"
Boring Location:	55+21.2, 12.1 ft Rt.	Casing ID/OD:	NW	Water Level*:	29.0 ft bgs
Hammer Efficiency Factor: 0.84		Hammer Type:	Automatic ☒ Hydraulic ☐	Rope & Cathead ☐	

Depth (ft.)	Sample No.	Pen./Rec. (in.)	Sample Depth (ft.)	Blows (/6 in.) Shear Strength (psf) or RQD (%)	N-uncorrected	N_{60}	Casing Blows	Elevation (ft.)	Visual Description and Remarks	Laboratory Testing Results/ AASHTO and Unified Class
0							SSA		See HB-LIB-102 for descriptions.	
5	MD	0/0	5.00 - 5.00	Not Recorded					Roller Coned through Cobble from 5.0-7.0 ft bgs.	
10	20	24/12	10.00 - 12.00	1/1/1/2	2	3			Brown, saturated, very loose, GRAVEL, some silt, 7-8" of wood in spoon tip.	
15	30	24/24	15.00 - 17.00	6/6/6/10	12	17			Brown, saturated, medium dense, GRAVEL, some silt, layers of wood.	
20	40	24/12	20.00 - 22.00	10/18/20/24	38	53			GRAVEL, saturated, dense, some silt, rock fragments.	
25	50	15/9	25.00 - 26.25	9/27/30(3")	---				4" Cobble at 24.3 ft bgs. Brown, saturated, very dense, GRAVEL, some silt, rock fragments, wood.	
30	60	24/24	30.00 - 32.00	14/31/30/32	61	85			Saturated, very dense, strata: 0.7 ft GRAVEL, trace silt, (6D/A) 0.8 ft sandy SILT, (6D/B) 0.5 ft WOOD, (6D/C)	
	R1	60/ 60	33.50 - 38.50	RQD = 93%			NQ-2	481.50	Casing refusal at 33.3 ft bgs. Roller Coned ahead to 33.5 ft bgs. 33.50 Top of Bedrock aty Elev. 481.5 ft. R1:Bedrock: Medium grey, fine grained, PHYLLITE, steep to moderately steep, tight joints with some rust staining. R1:Core Times (min:sec) 33.5-34.5 ft (2:53) 34.5-35.5 ft (2:03) 35.5-36.5 ft (2:04) 36.5-37.5 ft (2:20) 37.5-38.5 ft (3:25)	
40								476.50	38.50 Bottom of Exploration at 38.50 feet below ground surface.	

Remarks: Filled in Boring with grout.

Stratification lines represent approximate boundaries between soil types; transitions may be gradual.

* Water level readings have been made at times and under conditions stated. Groundwater fluctuations may occur due to conditions other than those present at the time measurements were made.

Page 1 of 1 — Boring No.: HB-LIB-102A

Maine Department of Transportation — Soil/Rock Exploration Log — US CUSTOMARY UNITS

Project: Intersection Routes 173/220
Location: Liberty, Maine
Boring No.: HB-LIB-103
WIN: 17888.00

Driller:	MaineDOT	Elevation (ft.)	517.2	Auger ID/OD:	5" Dia Solid Stem
Operator:	Giguere/Giles	Datum:	NAVD88	Sampler:	Standard Split Spoon
Logged By:	K. Breskin	Rig Type:	CME 45C	Hammer Wt./Fall:	140#/30"
Date Start/Finish:	9/29/11-9/29/11	Drilling Method:	Cased Wash Boring	Core Barrel:	NQ-2"
Boring Location:	23+34, 6.7 ft Rt.	Casing ID/OD:	NW	Water Level*:	None Observed
Hammer Efficiency Factor: 0.84		Hammer Type:	Automatic ☒ Hydraulic ☐	Rope & Cathead ☐	

Depth (ft.)	Sample No.	Pen./Rec. (in.)	Sample Depth (ft.)	Blows (/6 in.) Shear Strength (psf) or RQD (%)	N-uncorrected	N_{60}	Casing Blows	Elevation (ft.)	Visual Description and Remarks	Laboratory Testing Results/ AASHTO and Unified Class
0							SSA	516.45	9" HMA. 0.75	
	10	24/19	1.00 - 3.00	13/11/10/10	21	29			Brown, moist, medium dense, gravelly SAND, trace silt.	GM244132 A-1-b, SM WC=6.0%
5									Gravelly SAND, some silt at 2.6 ft bgs. Roller Coned through rock at 3.0-4.0, 5.0-6.0 and 7.5-8.5 ft bgs.	
									20	
									51	
									39	
									44	
									36	
10	20	24/9	10.50 - 12.50	4/6/9/10	15	21			Wet to saturated, medium dense strata: 1" grey, medium uniform SAND, trace silts 3" peastone and gravel 2" silty SAND1 2" stones	
									31	
									55	
									96	
									120	
15	30	21.6/11	15.00 - 16.80	36/45	---					GM244133 A-1-b, GM WC=10.3%
	R1	58.8/ 58.8	16.80 - 21.70	RQD = 70%			NQ-2	500.40	16.80 Top of Bedrock at Elev. 500.4 ft. R1:Bedrock: Medium grey, fine grained PHYLLITE, steep to moderately steep, tight joints, some rust staining. R1:Core Times (min:sec) 16.8-17.8 ft (3:40) 17.8-18.8 ft (2:20) 18.8-19.8 ft (2:20) 19.8-20.8 ft (1:55) 20.8-21.7 ft (2:45) RQD maybe reduced as result of coring through 3" casing.	
20								495.50	21.70 Bottom of Exploration at 21.70 feet below ground surface.	

Remarks:

Stratification lines represent approximate boundaries between soil types; transitions may be gradual.

* Water level readings have been made at times and under conditions stated. Groundwater fluctuations may occur due to conditions other than those present at the time measurements were made.

Page 1 of 1 — Boring No.: HB-LIB-103

Maine Department of Transportation — Soil/Rock Exploration Log — US CUSTOMARY UNITS

Project: Intersection Routes 173/220
Location: Liberty, Maine
Boring No.: HB-LIB-104
WIN: 17888.00

Driller:	MaineDOT	Elevation (ft.)	513.8	Auger ID/OD:	5" Dia Solid Stem
Operator:	Giguere/Giles	Datum:	NAVD88	Sampler:	Standard Split Spoon
Logged By:	K. Breskin	Rig Type:	CME 45C	Hammer Wt./Fall:	140#/30"
Date Start/Finish:	9/30/11-9/30/11	Drilling Method:	Cased Wash Boring	Core Barrel:	N/A
Boring Location:	55+49.7, 11.0 ft Rt.	Casing ID/OD:	NW	Water Level*:	29.0 ft bgs
Hammer Efficiency Factor: 0.84		Hammer Type:	Automatic ☒ Hydraulic ☐	Rope & Cathead ☐	

Depth (ft.)	Sample No.	Pen./Rec. (in.)	Sample Depth (ft.)	Blows (/6 in.) Shear Strength (psf) or RQD (%)	N-uncorrected	N_{60}	Casing Blows	Elevation (ft.)	Visual Description and Remarks	Laboratory Testing Results/ AASHTO and Unified Class
0							SSA	513.30	6" HMA. 0.50	
	10	24/17	1.00 - 3.00	5/8/6/5	14	20			Brown, moist, medium dense, SAND, trace silt, sandy SILT in bottom 3".	
5	20	24/18	5.00 - 7.00	1/2/2/1	4	6			Brown, damp, loose, silty SAND.	
									Cobbles at 7.8 ft bgs.	
10	30	24/14	10.00 - 12.00	9/4/3/14	7	10	34		Brown, saturated, medium dense, SAND, trace silt upper 3". Brown, saturated, loose, silty SAND lower 12".	
							450		6" Rock.	
							125		Roller Cone through rocks to 14.5 ft bgs.	
15								499.30	14.50 Bottom of Exploration at 14.50 feet below ground surface.	
									ABANDONED BORING	

Remarks: Filled in Boring with grout.

Stratification lines represent approximate boundaries between soil types; transitions may be gradual.

* Water level readings have been made at times and under conditions stated. Groundwater fluctuations may occur due to conditions other than those present at the time measurements were made.

Page 1 of 1 — Boring No.: HB-LIB-104

State of Maine - Department of Transportation
Power Auger Probe Summary Sheet

Town(s): Liberty **Work Number: 17888.00**

Station (Feet)	Offset (Feet)	Weathered Rock (Feet)	Refusal (Feet)	No Refusal (Feet)	Water Depth (Ft.)	Comments / Date 9/30/2011
54+60.1	9.0 Rt.		8.2			Roller Coned to 9.0 ft.

STATE OF MAINE
DEPARTMENT OF TRANSPORTATION

STP-1788(800)X

PIN 17888.00

HIGHWAY PLANS

	BY	DATE
PROJ. MANAGER		
DESIGN-DETAILED	K.BRESKIN	JUL 2013
CHECKED-REVIEWED	T.WHITE	
DESIGN2-DETAILED2		
DESIGN3-DETAILED3		
REVISIONS 1		
REVISIONS 2		
REVISIONS 3		
REVISIONS 4		
FIELD CHANGES		

SIGNATURE

P.E. NUMBER

DATE

LIBERTY
INTERSECTION ROUTES 173/220

BORING LOGS

SHEET NUMBER
11
OF 37

Filename: ...\MSTA\012_BORING LOGS2.dgn Division: HIGHWAY Username: sarah.k.leblanc Date:8/20/2013

Maine Department of Transportation — Soil/Rock Exploration Log — US CUSTOMARY UNITS

Project: Intersection Routes 173/220
Location: Liberty, Maine

Boring No.: HB-LIB-201
WIN: 17888.00

Driller:	Maine Test Borings	Elevation (ft.)	498.6	Auger ID/OD:	N/A
Operator:	Enos/Barlow	Datum:	NAVD88	Sampler:	Standard Split Spoon
Logged By:	K. Breskin	Rig Type:	CME 45C	Hammer Wt./Fall:	140#/30"
Date Start/Finish:	11/16/11-11/16/11	Drilling Method:	Cased Wash Boring	Core Barrel:	NX
Boring Location:	55+64.5, 39.7 ft Lt.	Casing ID/OD:	NW	Water Level*:	None Observed
Hammer Efficiency Factor:		Hammer Type:	Automatic ☐ Hydraulic ☐ Rope & Cathead ☒		

Definitions:
D = Split Spoon Sample
MD = Unsuccessful Split Spoon Sample attempt
U = Thin Wall Tube Sample
MU = Unsuccessful Thin Wall Tube Sample attempt
V = Insitu Vane Shear Test, PP = Pocket Penetrometer
MV = Unsuccessful Insitu Vane Shear Test attempt
R = Rock Core Sample
SSA = Solid Stem Auger
HSA = Hollow Stem Auger
RC = Roller Cone
WOH = weight of 140lb. hammer
WOR/C = weight of rods or casing
WO1P = Weight of one person
S_u = Insitu Field Vane Shear Strength (psf)
T_v = Pocket Torvane Shear Strength (psf)
q_p = Unconfined Compressive Strength (ksf)
N-uncorrected = Raw Field SPT N-value
Hammer Efficiency Factor = Annual Calibration Value
N_{60} = SPT N-uncorrected corrected for hammer efficiency
N_{60} = (Hammer Efficiency Factor/60%)*N-uncorrected
$S_{u(lab)}$ = Lab Vane Shear Strength (psf)
WC = water content, percent
LL = Liquid Limit
PL = Plastic Limit
PI = Plasticity Index
G = Grain Size Analysis
C = Consolidation Test

Depth (ft.)	Sample No.	Pen./Rec. (in.)	Sample Depth (ft.)	Blows (/6 in.) Shear Strength (psf) RQD (%)	N-uncorrected	N_{60}	Casing Blows	Elevation (ft.)	Visual Description and Remarks	Laboratory Testing Results/ AASHTO and Unified Class
0	MD	0/0	0.00 - 0.00	WOR/WOR/WOR/WOR	---		WOR		Very loose SILT.	
							WOR			
							WOR			
							40	495.60	3.00	
							40			
5	10	24/5	5.25 - 7.25	27/22/8/8	30	0	46		Grey, wet, medium dense, SAND, some silt, little gravel. Stone at 6.0 ft bgs.	G#262004 A-2-4, SM WC=14.5%
							40			
							40		Brown wash water at 8.0 ft bgs.	
							77			
							183			
							139		Reddish wash water at 10.5 ft bgs. Brown, wet, dense SAND, some gravel, some silt.	
10	20	9/4	11.00 - 11.75	46/50(3")	---			486.85	11.75	G#262005 A-1-b, SM WC=12.2%
	R1	53/44	12.25 - 16.67	RQD = 77%			NX	486.35	12.25 Roller Cone ahead into Weathered Rock to 12.25 ft bgs. Top of Intact Bedrock at Elev. 486.35 ft. R1:Bedrock: Medium grey, fine grained PHYLLITE, steep to moderately steep, tight joints, some rust stains. R1:Core Times (min:sec) 12.25-13.25 ft (5:20) 13.25-14.25 ft (5:00) 14.25-15.25 ft (4:00) 15.25-16.25 ft (4:10) 16.25-16.67 ft (2:50) 83% Recovery	
15								481.93	16.67 Bottom of Exploration at 16.67 feet below ground surface.	
20										
25										

Remarks:
Deck to Ground 9.08 ft.
Deck to top of water 1.67 ft.

Stratification lines represent approximate boundaries between soil types; transitions may be gradual.
* Water level readings have been made at times and under conditions stated. Groundwater fluctuations may occur due to conditions other than those present at the time measurements were made.

Page 1 of 1
Boring No.: HB-LIB-201

Maine Department of Transportation — Soil/Rock Exploration Log — US CUSTOMARY UNITS

Project: Intersection Routes 173/220
Location: Liberty, Maine

Boring No.: HB-LIB-202
WIN: 17888.00

Driller:	Maine Test Borings	Elevation (ft.)	498.02	Auger ID/OD:	5" Dia.
Operator:	Enos/Barlow	Datum:	NAVD88	Sampler:	N/A
Logged By:	K. Breskin	Rig Type:	CME 45C	Hammer Wt./Fall:	N/A
Date Start/Finish:	11/16/11-11/16/11	Drilling Method:	Solid Stem Auger	Core Barrel:	N/A
Boring Location:	55+76.4, 45.0 ft Lt.	Casing ID/OD:	N/A	Water Level*:	None Observed
Hammer Efficiency Factor:		Hammer Type:	Automatic ☐ Hydraulic ☐ Rope & Cathead ☐		

Depth (ft.)	Sample No.	Pen./Rec. (in.)	Sample Depth (ft.)	Blows (/6 in.) Shear Strength (psf) RQD (%)	N-uncorrected	N_{60}	Casing Blows	Elevation (ft.)	Visual Description and Remarks	Laboratory Testing Results/ AASHTO and Unified Class
0							SSA		Soil.	
5								491.35	6.67 Augered into Rock.	
								490.72	7.30 Bottom of Exploration at 7.30 feet below ground surface.	
10										
15										
20										
25										

Remarks:
Deck to Ground 9.67 ft.

Stratification lines represent approximate boundaries between soil types; transitions may be gradual.
* Water level readings have been made at times and under conditions stated. Groundwater fluctuations may occur due to conditions other than those present at the time measurements were made.

Page 1 of 1
Boring No.: HB-LIB-202

Maine Department of Transportation — Soil/Rock Exploration Log — US CUSTOMARY UNITS

Project: Intersection Routes 173/220
Location: Liberty, Maine

Boring No.: HB-LIB-203
WIN: 17888.00

Driller:	Maine Test Borings	Elevation (ft.)	501.3	Auger ID/OD:	5" Dia.
Operator:	Enos/Barlow	Datum:	NAVD88	Sampler:	N/A
Logged By:	K. Breskin	Rig Type:	CME 45C	Hammer Wt./Fall:	N/A
Date Start/Finish:	11/17/11-11/17/11	Drilling Method:	Solid Stem Auger	Core Barrel:	N/A
Boring Location:	55+89.5, 47.4 ft Lt.	Casing ID/OD:	N/A	Water Level*:	None Observed
Hammer Efficiency Factor:		Hammer Type:	Automatic ☐ Hydraulic ☐ Rope & Cathead ☐		

Depth (ft.)	Sample No.	Pen./Rec. (in.)	Sample Depth (ft.)	Blows (/6 in.) Shear Strength (psf) RQD (%)	N-uncorrected	N_{60}	Casing Blows	Elevation (ft.)	Visual Description and Remarks	Laboratory Testing Results/ AASHTO and Unified Class
0							SSA		Soil.	
5									Cobble from 3.8-4.4 ft bgs.	
								494.80	6.50	
								494.55	Augered into Rock. 6.75 Bottom of Exploration at 6.75 feet below ground surface.	
10										
15										
20										
25										

Remarks:
Deck to Ground 6.67 ft.

Stratification lines represent approximate boundaries between soil types; transitions may be gradual.
* Water level readings have been made at times and under conditions stated. Groundwater fluctuations may occur due to conditions other than those present at the time measurements were made.

Page 1 of 1
Boring No.: HB-LIB-203

Maine Department of Transportation — Soil/Rock Exploration Log — US CUSTOMARY UNITS

Project: Intersection Routes 173/220
Location: Liberty, Maine

Boring No.: HB-LIB-204
WIN: 17888.00

Driller:	Maine Test Borings	Elevation (ft.)	499.5	Auger ID/OD:	5" Dia.
Operator:	Enos/Barlow	Datum:	NAVD88	Sampler:	N/A
Logged By:	K. Breskin	Rig Type:	CME 45C	Hammer Wt./Fall:	N/A
Date Start/Finish:	11/17/11-11/17/11	Drilling Method:	Solid Stem Auger	Core Barrel:	N/A
Boring Location:	55+52.5, 35.2 ft Lt.	Casing ID/OD:	N/A	Water Level*:	None Observed
Hammer Efficiency Factor:		Hammer Type:	Automatic ☐ Hydraulic ☐ Rope & Cathead ☐		

Depth (ft.)	Sample No.	Pen./Rec. (in.)	Sample Depth (ft.)	Blows (/6 in.) Shear Strength (psf) RQD (%)	N-uncorrected	N_{60}	Casing Blows	Elevation (ft.)	Visual Description and Remarks	Laboratory Testing Results/ AASHTO and Unified Class
0							SSA		Soil.	
5										
10								488.50	11.00 Augered into Rock.	
								487.50	12.00 Bottom of Exploration at 12.00 feet below ground surface.	
15										
20										
25										

Remarks:
Deck to Ground 8.5 ft.

Stratification lines represent approximate boundaries between soil types; transitions may be gradual.
* Water level readings have been made at times and under conditions stated. Groundwater fluctuations may occur due to conditions other than those present at the time measurements were made.

Page 1 of 1
Boring No.: HB-LIB-204

Maine Department of Transportation — Soil/Rock Exploration Log — US CUSTOMARY UNITS

Project: Intersection Routes 173/220
Location: Liberty, Maine

Boring No.: HB-LIB-205
WIN: 17888.00

Driller:	Maine Test Borings	Elevation (ft.)	502.8	Auger ID/OD:	N/A
Operator:	Enos/Barlow	Datum:	NAVD88	Sampler:	Standard Split Spoon
Logged By:	K. Breskin	Rig Type:	CME 45C	Hammer Wt./Fall:	140#/30"
Date Start/Finish:	11/17/11-11/17/11	Drilling Method:	Cased Wash Boring	Core Barrel:	NX
Boring Location:	55+33, 43.6 ft Lt.	Casing ID/OD:	HW & NW	Water Level*:	None Observed
Hammer Efficiency Factor:		Hammer Type:	Automatic ☐ Hydraulic ☐ Rope & Cathead ☒		

Depth (ft.)	Sample No.	Pen./Rec. (in.)	Sample Depth (ft.)	Blows (/6 in.) Shear Strength (psf) RQD (%)	N-uncorrected	N_{60}	Casing Blows	Elevation (ft.)	Visual Description and Remarks	Laboratory Testing Results/ AASHTO and Unified Class
0	1D	24/12	0.00 - 2.00	WOH/WOH/3/7	3	0	WOH		Grey, wet, very loose, sandy SILT, trace gravel.	G#262006 A-4, ML WC=35.4%
							7	500.80	2.00	
							25			
							26			
							31			
5	2D	24/14	5.00 - 7.00	5/9/10/14	19	0	WASH AHEAD		Grey-brown, wet, medium dense, sandy SILT, some gravel.	G#262007 A-4, SM WC=10.9%
10	3D	24/12	10.00 - 12.00	10/13/10/12	23	0	23		Grey-brown, wet, medium dense, SAND, some silt, some gravel, stones similar to bedrock. Changed to NW Casing at 10.0 ft bgs.	G#262008 A-2-4, SM WC=11.1%
							25			
							34			
							39		Reddish water from 14.0-14.5 ft bgs.	
							28			
15	4D		15.17 - 16.59	22/27/52(5")	---		TB AH		Washed ahead to 19.25 ft bgs. Grey-brown, wet, dense Sandy SILT, little gravel, weathered rock in tip of spoon.	G#262009 A-4, SM WC=11.6%
20	R1	60/48	19.25 - 24.25	RQD = 35%			NX	483.55	19.25 Top of Bedrock at Elev. 483.55 ft. R1:Bedrock: Same as HB-LIB-201. R1, except poor quality. Maybe granite in bottom of core. White wash water. R1:Core Times (min:sec) 19.25-20.25 ft (2:55) 20.25-21.25 ft (2:40) 21.25-22.25 ft (2:25) 22.25-23.25 ft (2:50) 23.25-24.25 ft (3:50)	
25								478.55	24.25 Bottom of Exploration at 24.25 feet below ground surface.	

Remarks:
Deck to Ground 5.25 ft.

Stratification lines represent approximate boundaries between soil types; transitions may be gradual.
* Water level readings have been made at times and under conditions stated. Groundwater fluctuations may occur due to conditions other than those present at the time measurements were made.

Page 1 of 1
Boring No.: HB-LIB-205

STATE OF MAINE
DEPARTMENT OF TRANSPORTATION

STP-1788(800)X

PIN 17888.00

HIGHWAY PLANS

	BY	DATE
PROJ. MANAGER		
DESIGN-DETAILED	K.BRESKIN	JUL 2013
CHECKED-REVIEWED		
DESIGN2-DETAILED2		
DESIGN3-DETAILED3		
REVISIONS 1		
REVISIONS 2		
REVISIONS 3		
REVISIONS 4		
FIELD CHANGES		

SIGNATURE

P.E. NUMBER

DATE

LIBERTY
INTERSECTION ROUTES 173/220

BORING LOGS

SHEET NUMBER
12
OF 37

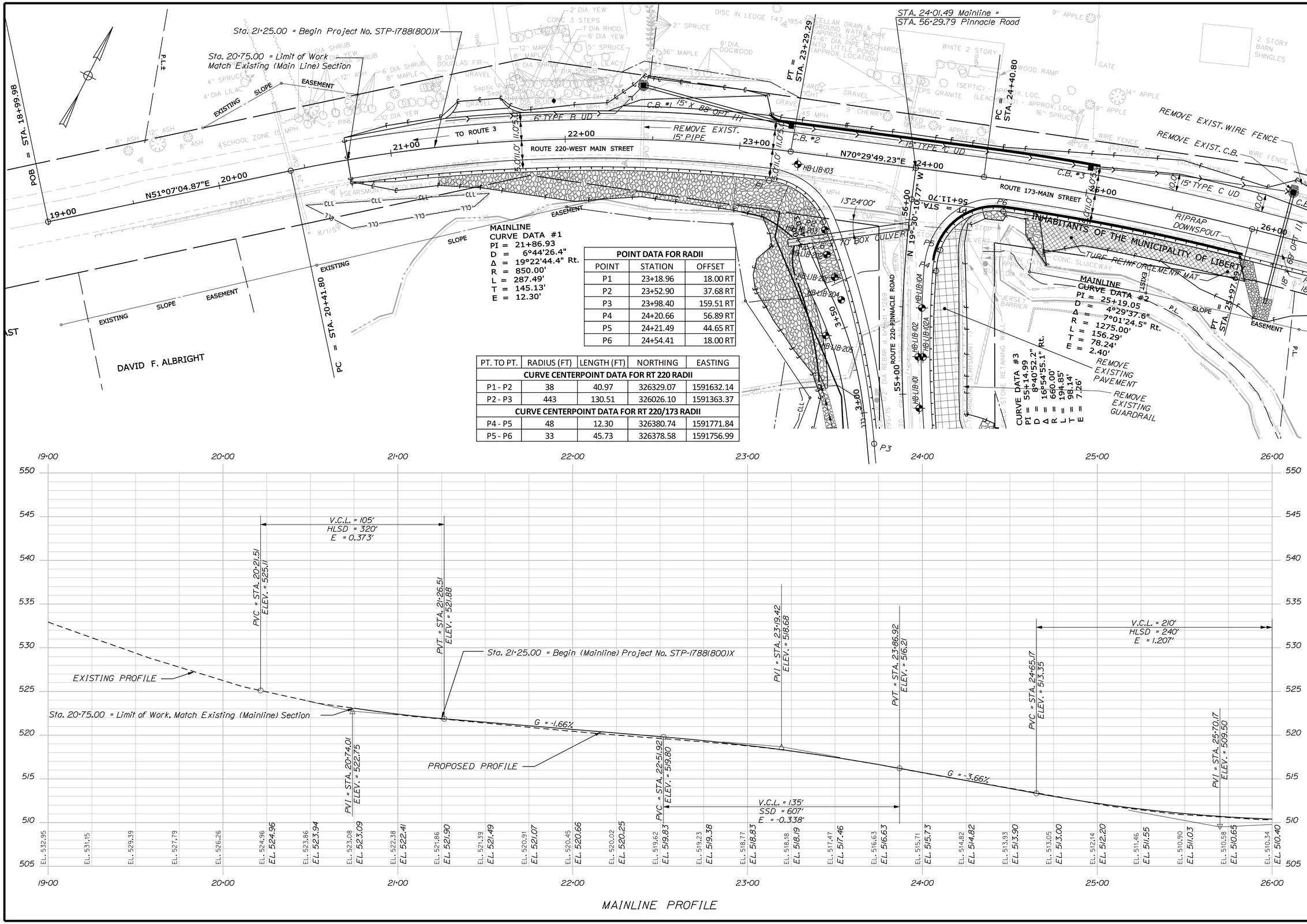

POINT DATA FOR RADII		
POINT	STATION	OFFSET
P1	23+18.96	18.00 RT
P2	23+52.90	37.68 RT
P3	23+98.40	159.51 RT
P4	24+20.66	56.89 RT
P5	24+21.49	44.65 RT
P6	24+54.41	18.00 RT

PT. TO PT.	RADIUS (FT)	LENGTH (FT)	NORTHING	EASTING
CURVE CENTERPOINT DATA FOR RT 220 RADII				
P1 - P2	38	40.97	326329.07	1591632.14
P2 - P3	443	130.51	326026.10	1591363.37
CURVE CENTERPOINT DATA FOR RT 220/173 RADII				
P4 - P5	48	12.30	326380.74	1591771.84
P5 - P6	33	45.73	326378.58	1591756.99

STATE OF MAINE
DEPARTMENT OF TRANSPORTATION

STP-1788(800)X

WIN 17888.00

HIGHWAY PLANS

PROJ. MANAGER	E. Martin	BY	DATE
DESIGN-DETAILED	S. LeBlanc	J. Harden	x
CHECKED-REVIEWED	------	------	------
DESIGN2-DETAILED2	------	------	------
DESIGN3-DETAILED3	------	------	------
REVISIONS 1	------	------	------
REVISIONS 2	------	------	------
REVISIONS 3	------	------	------
REVISIONS 4	------	------	------
FIELD CHANGES	------	------	------

SIGNATURE

P.E. NUMBER

DATE

LIBERTY
INTERSECTION ROUTES 173\220

PLANS

SHEET NUMBER

13

OF 37

Filename: ...\HIGHWAY\MSTA\013_HDPlan1.dgn Division: HIGHWAY Username: sarah.k.leblanc Date:8/20/2013

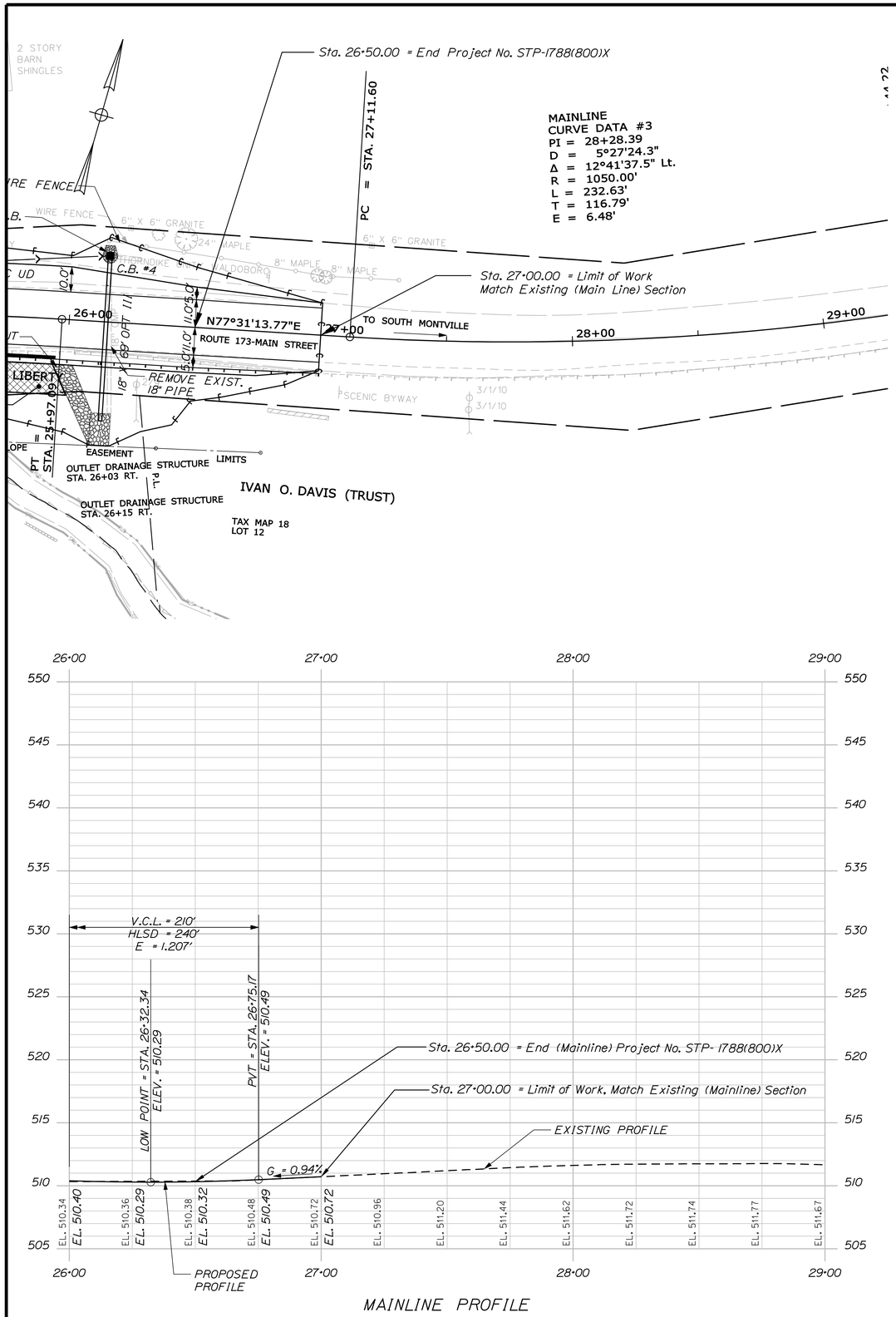

MAINLINE PROFILE

STATE OF MAINE
DEPARTMENT OF TRANSPORTATION

STP-1788(800)X

WIN
17888.00

HIGHWAY PLANS

PROJ. MANAGER	E. Merlin	BY	DATE
DESIGN-DETAILED	S. LeBlanc	J. Harden	x
CHECKED-REVIEWED	------	------	------
DESIGN2-DETAILED2	------	------	------
DESIGN3-DETAILED3	------	------	------
REVISIONS: 1	------		------
REVISIONS: 2	------		------
REVISIONS: 3	------		------
REVISIONS: 4	------		------
FIELD CHANGES	------		------

SIGNATURE

P.E. NUMBER

DATE

LIBERTY
INTERSECTION ROUTES 173\220

PLANS

SHEET NUMBER

14

OF 37

Filename: ...\HIGHWAY\MSTA\014_HDPlan2.dgn Division: HIGHWAY Username: sarah.k.leblanc Date:8/20/2013

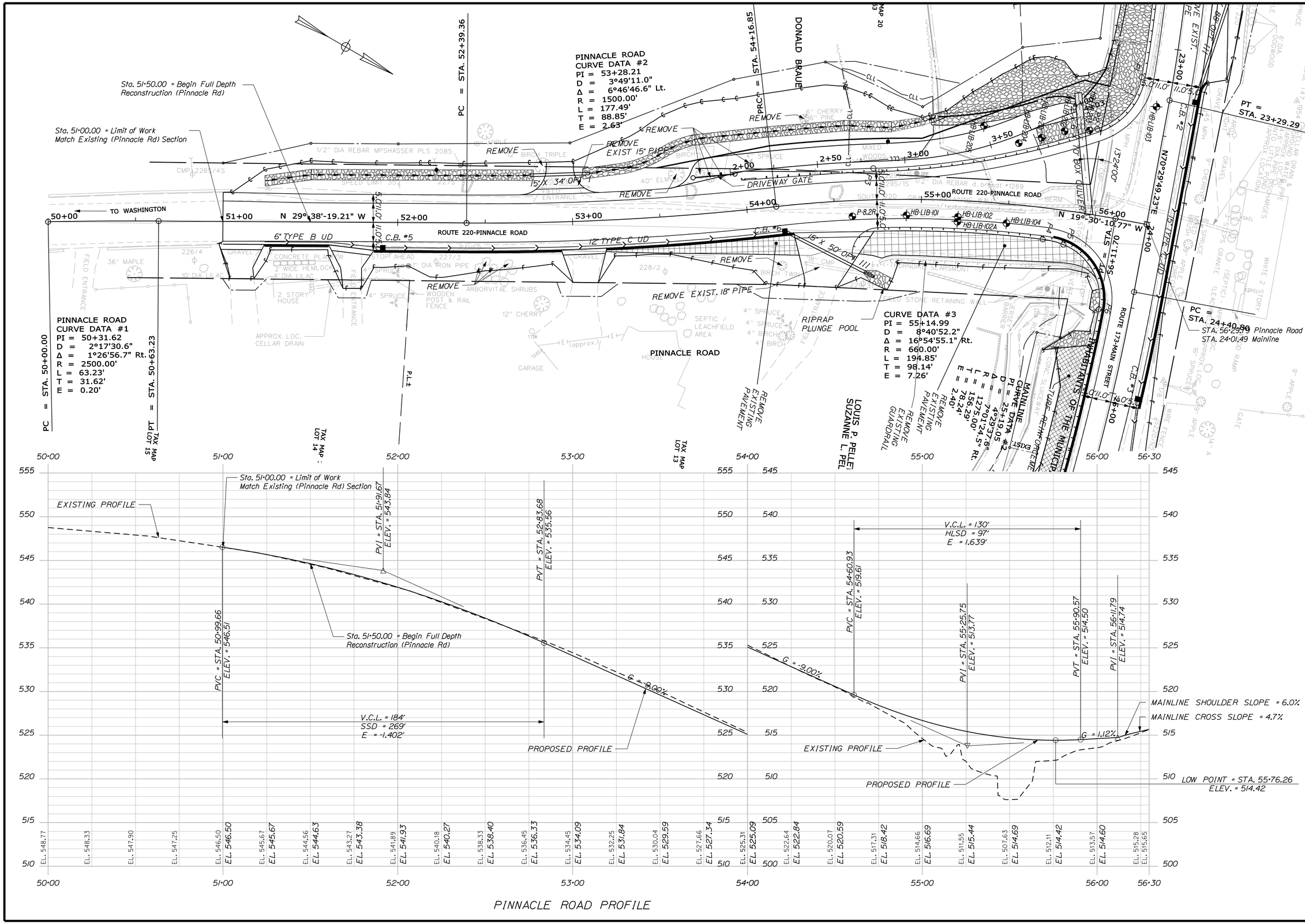

STATE OF MAINE
DEPARTMENT OF TRANSPORTATION

STP-1788(800)X

WIN 17888.00

HIGHWAY PLANS

PROJ. MANAGER	E. Martin	BY	DATE
DESIGN-DETAILED	S. LeBlanc	J. Harden	x
CHECKED-REVIEWED			
DESIGN2-DETAILED2			
DESIGN3-DETAILED3			
REVISIONS 1			
REVISIONS 2			
REVISIONS 3			
REVISIONS 4			
FIELD CHANGES			

SIGNATURE

P.E. NUMBER

DATE

LIBERTY
INTERSECTION ROUTES 173\220

PLANS

SHEET NUMBER

15

OF 37

Filename: ...\HIGHWAY\MSTA\015_HDPlan3.dgn Division: HIGHWAY Username: sarah.k.leblanc Date:8/20/2013

CURVE DATA #1
PI = 2+25.24
D = 3°52'35.7"
Δ = 1°57'23.2" Rt.
R = 1478.00'
L = 50.47'
T = 25.24'
E = 0.22'

CURVE DATA #2
PI = 2+67.06
D = 8°24'04.1"
Δ = 2°47'16.4" Rt.
R = 682.00'
L = 33.18'
T = 16.60'
E = 0.20'

CURVE DATA #3
PI = 2+95.29
D = 13°03'05.1"
Δ = 3°02'10.6" Lt.
R = 439.00'
L = 23.26'
T = 11.63'
E = 0.15'

CURVE DATA #4
PI = 3+43.38
D = 28°05'10.2"
Δ = 20°16'10.5" Lt.
R = 204.00'
L = 72.17'
T = 36.47'
E = 3.23'

CURVE DATA #5
PI = 3+90.90
D = 28°38'52.4"
Δ = 6°45'30.9" Rt.
R = 200.00'
L = 23.59'
T = 11.81'
E = 0.35'

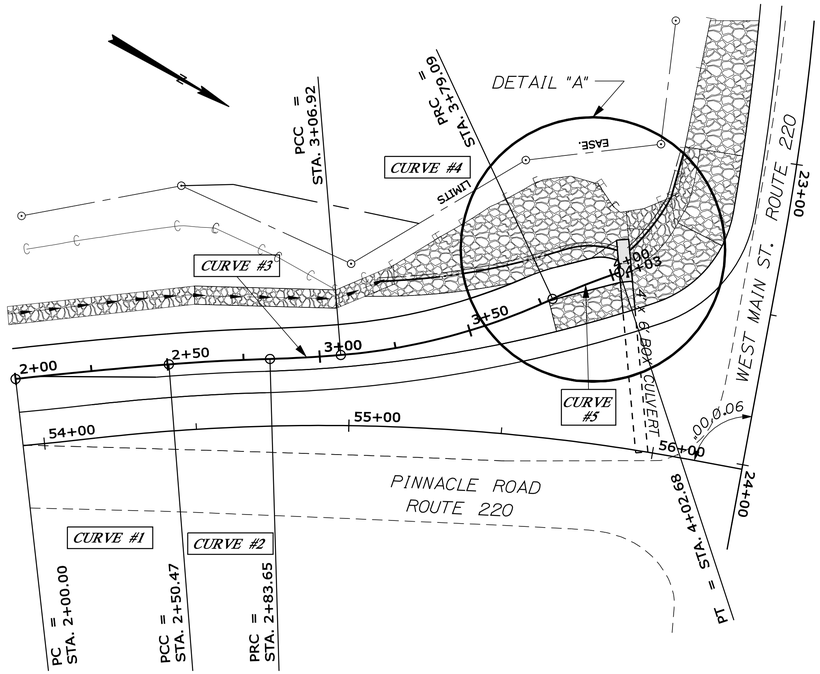

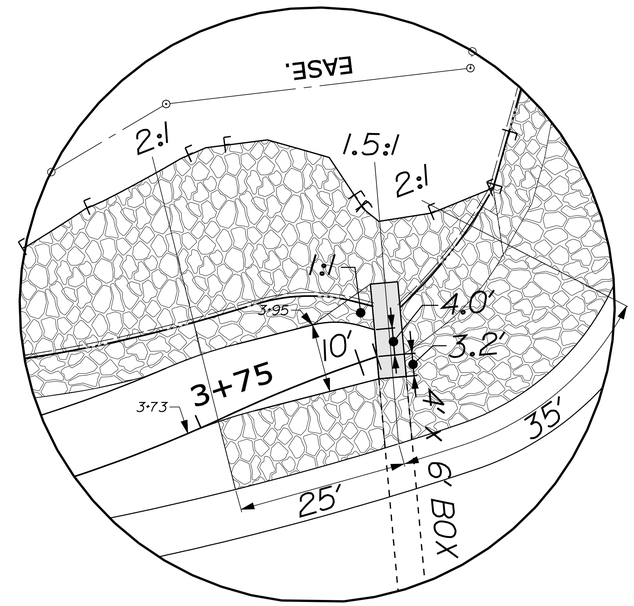

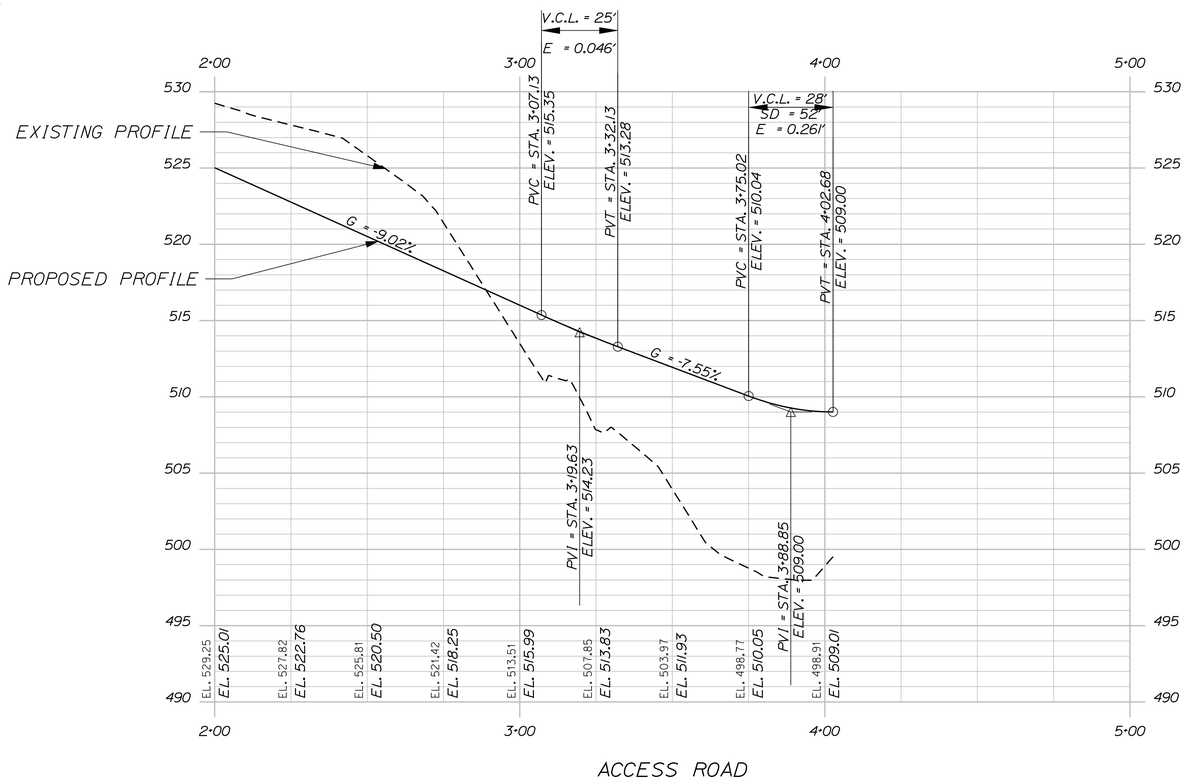

NOT TO SCALE

STATE OF MAINE
DEPARTMENT OF TRANSPORTATION

STP-1788(800)X

WIN 17888.00

HIGHWAY PLANS

PROJ. MANAGER	E. Martin	BY	DATE
DESIGN-DETAILED	S. LeBlanc	J. Harden	x
CHECKED-REVIEWED	------	------	------
DESIGN2-DETAILED2	------	------	------
DESIGN3-DETAILED3	------	------	------
REVISIONS 1	------	------	------
REVISIONS 2	------	------	------
REVISIONS 3	------	------	------
REVISIONS 4	------	------	------
FIELD CHANGES	------	------	------

SIGNATURE

P.E. NUMBER

DATE

LIBERTY
INTERSECTION ROUTES 173\220

ACCESS ROAD PROFILE

SHEET NUMBER
16
OF 37

Filename: ...\016_Access Road Profile.dgn Division: HIGHWAY Username: sarah.k.leblanc Date:8/20/2013

C = 23.40 CY

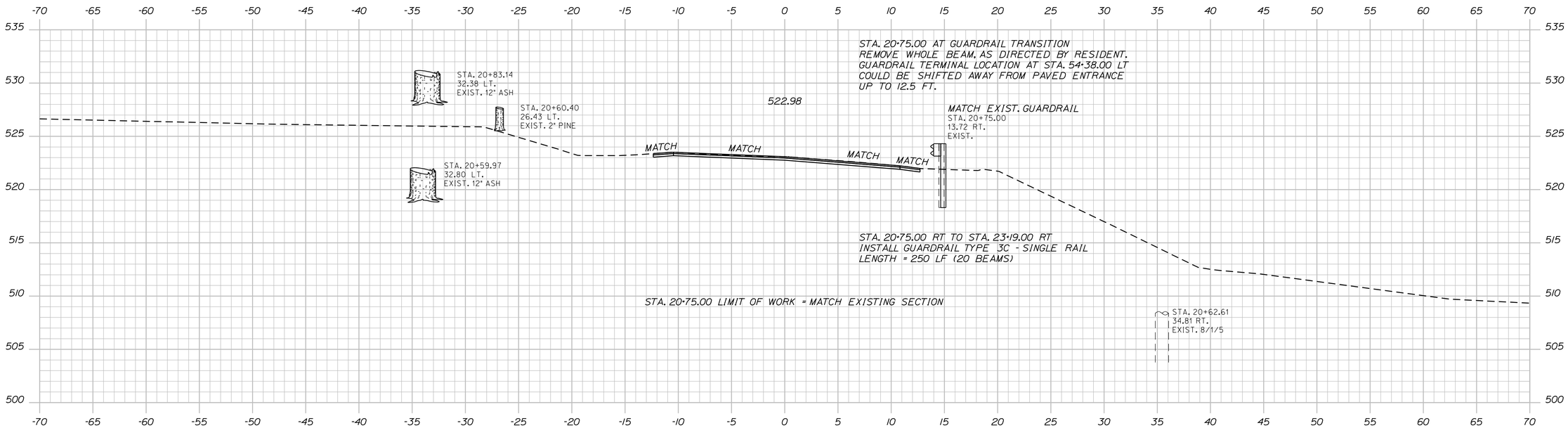

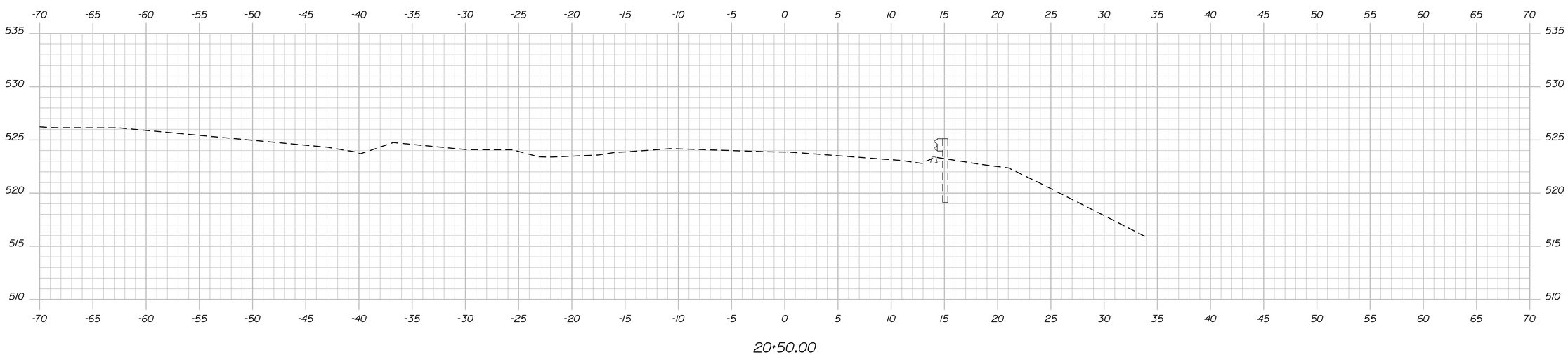

STATE OF MAINE
DEPARTMENT OF TRANSPORTATION

STP-1788(800)X

WIN
17888.00

HIGHWAY PLANS

PROJ. MANAGER	E. Martin	BY	DATE
DESIGN-DETAILED	S. LeBlanc	J. Harden	x
CHECKED-REVIEWED	------	------	------
DESIGN2-DETAILED2	------	------	------
DESIGN3-DETAILED3	------	------	------
REVISIONS 1	------	------	------
REVISIONS 2	------	------	------
REVISIONS 3	------	------	------
REVISIONS 4	------	------	------
FIELD CHANGES	------	------	------

SIGNATURE

P.E. NUMBER

DATE

LIBERTY
INTERSECTION ROUTES 173\220

CROSS SECTIONS

SHEET NUMBER
17
OF 37

Sta. 20+50.00 to Sta. 20+75.00

Filename: ...\017_Xsect_Mainline_20+50_001.dgn Division: HIGHWAY Username: sarah.k.leblanc Date:8/20/2013

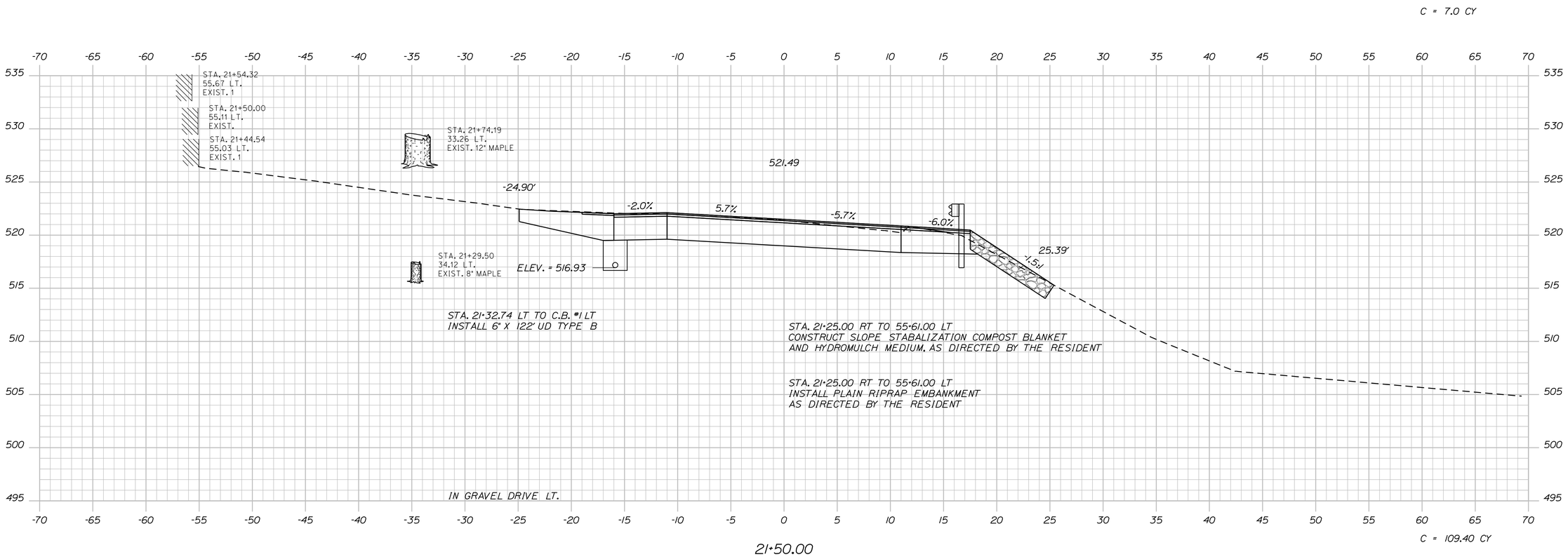

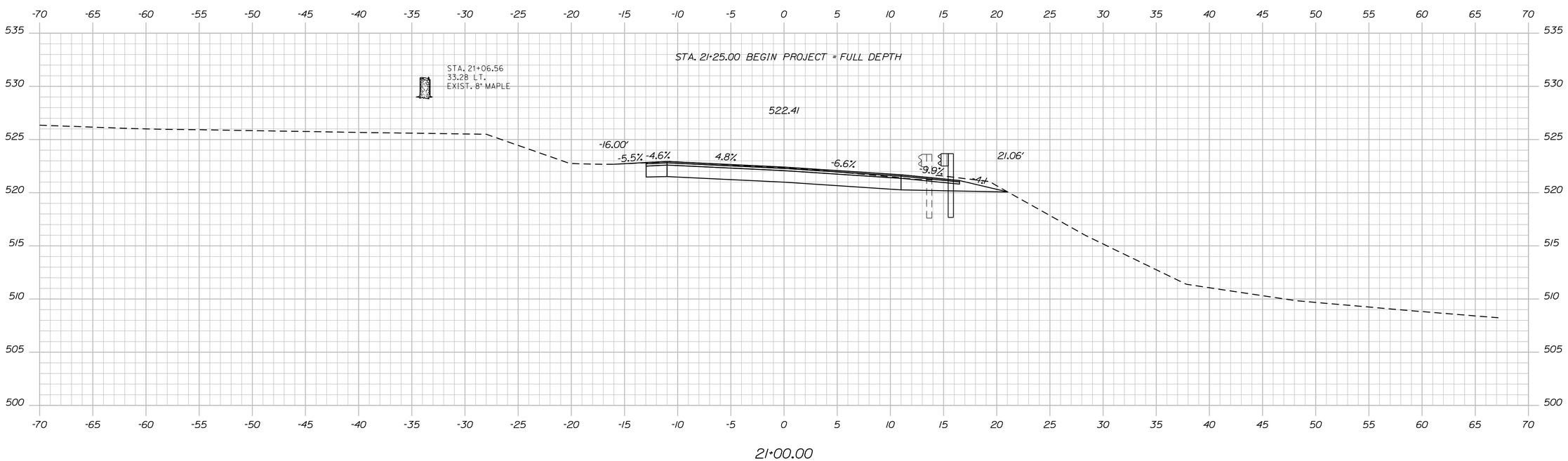

STATE OF MAINE
DEPARTMENT OF TRANSPORTATION

STP-1788(800)X

WIN 17888.00

HIGHWAY PLANS

PROJ. MANAGER	E. Martin	BY	DATE
DESIGN-DETAILED	S. LeBlanc	J. Harden	X
CHECKED-REVIEWED	------	------	------
DESIGN2-DETAILED2	------	------	------
DESIGN3-DETAILED3	------	------	------
REVISIONS 1	------	------	------
REVISIONS 2	------	------	------
REVISIONS 3	------	------	------
REVISIONS 4	------	------	------
FIELD CHANGES	------	------	------

SIGNATURE

P.E. NUMBER

DATE

LIBERTY
INTERSECTION ROUTES 173\220

CROSS SECTIONS

SHEET NUMBER
18
OF 37

Sta. 21+00.00 to Sta. 21+50.00

Filename: ...\018_Xsect_Mainline_21+00_002.dgn Division: HIGHWAY Username: sarah.k.leblanc Date:8/20/2013

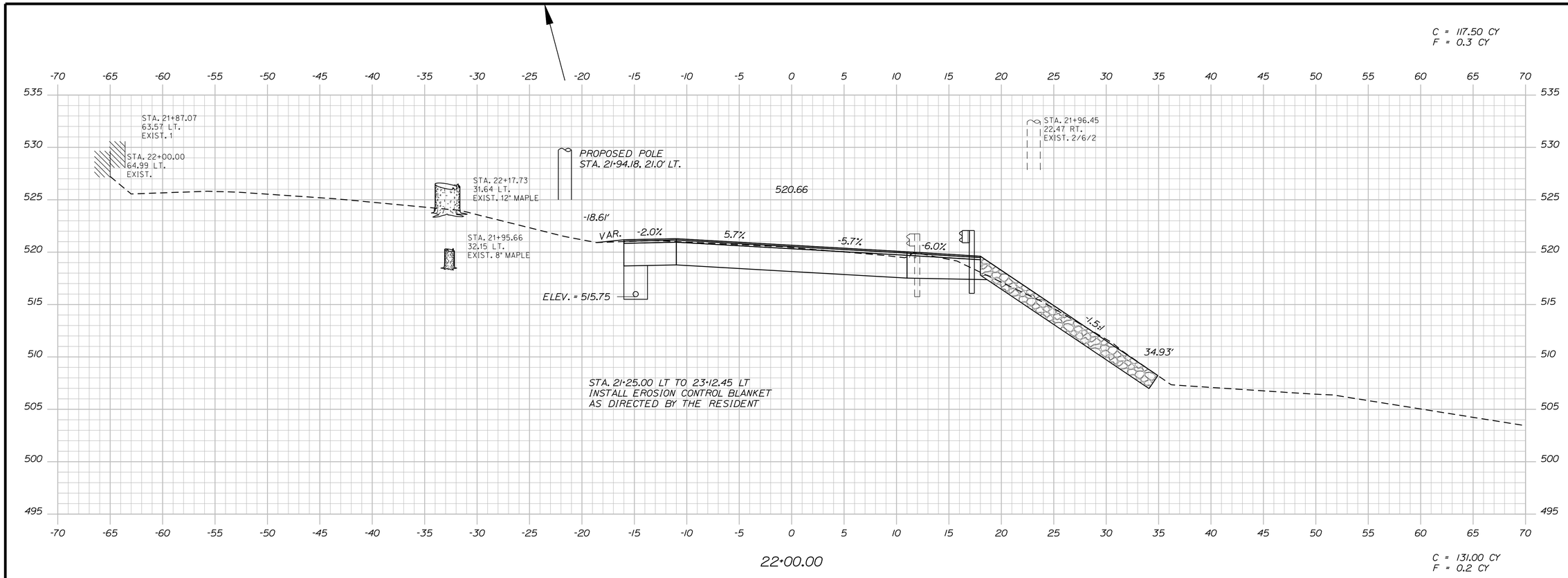

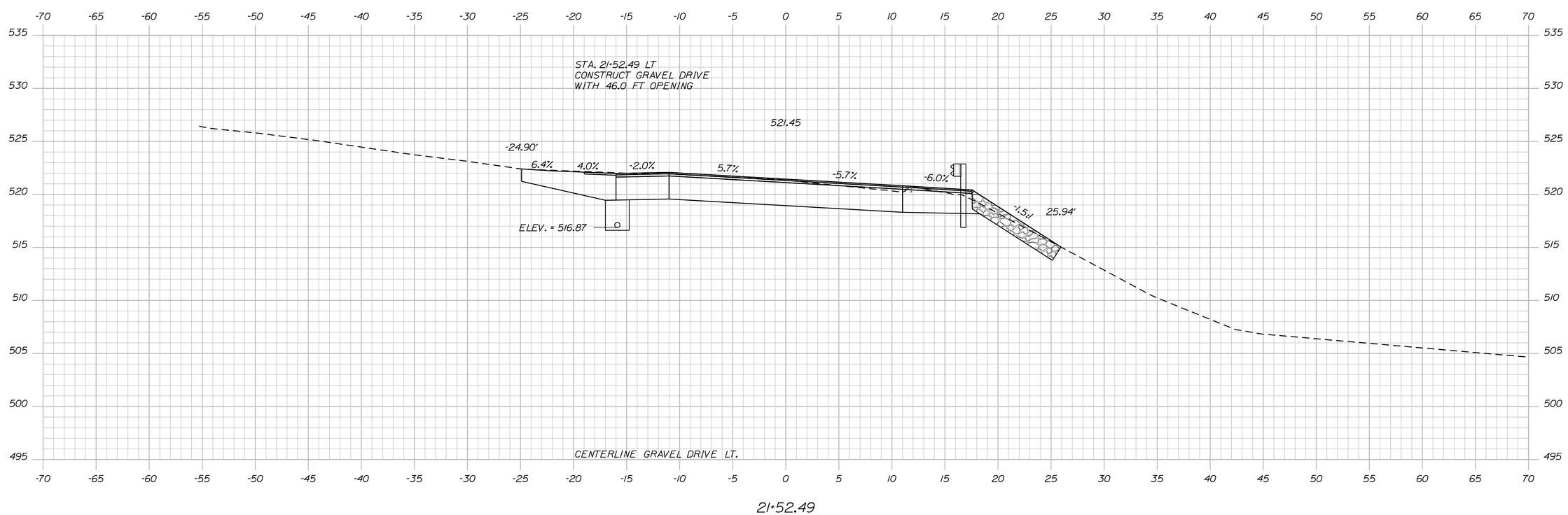

STATE OF MAINE
DEPARTMENT OF TRANSPORTATION

STP-1788(800)X

WIN 17888.00

HIGHWAY PLANS

PROJ. MANAGER	E. Martin	BY	DATE
DESIGN-DETAILED	S. LeBlanc	J. Harden	x
CHECKED-REVIEWED	------	------	------
DESIGN2-DETAILED2	------	------	------
DESIGN3-DETAILED3	------	------	------
REVISIONS 1	------		------
REVISIONS 2	------		------
REVISIONS 3	------		------
REVISIONS 4	------		------
FIELD CHANGES	------		------

SIGNATURE

P.E. NUMBER

DATE

LIBERTY
INTERSECTION ROUTES 173\220

CROSS SECTIONS

SHEET NUMBER

19

OF 37

Sta. 21+52.49 to Sta. 22+00.00

Filename: ...\019_Xsect_Mainline_21+52_003.dgn Division: HIGHWAY Username: sarah.k.leblanc Date:8/20/2013

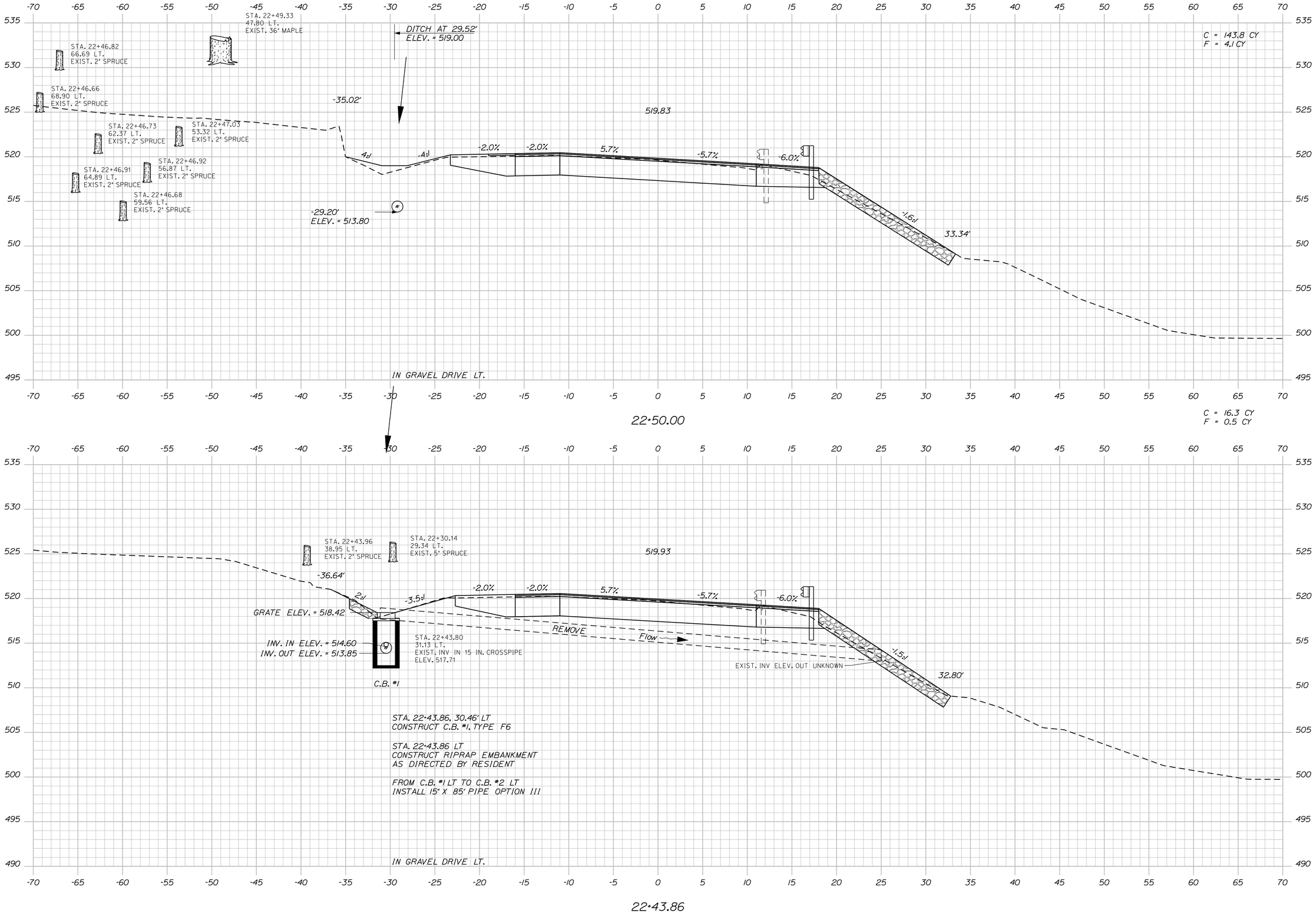

STATE OF MAINE
DEPARTMENT OF TRANSPORTATION

STP-1788(800)X

WIN 17888.00

HIGHWAY PLANS

		BY	DATE
PROJ. MANAGER	E. Martin		
DESIGN-DETAILED	S. LeBlanc	J. Harden	x
CHECKED-REVIEWED	------	------	------
DESIGN2-DETAILED2	------	------	------
DESIGN3-DETAILED3	------	------	------
REVISIONS 1	------		------
REVISIONS 2	------		------
REVISIONS 3	------		------
REVISIONS 4	------		------
FIELD CHANGES	------		------

SIGNATURE

P.E. NUMBER

DATE

LIBERTY
INTERSECTION ROUTES 173\220

CROSS SECTIONS

SHEET NUMBER

20

OF 37

Sta. 22+43.86 to Sta. 22+50.00

Filename: ...\020_Xsect_Mainline_22+43_004.dgn Division: HIGHWAY Username: sarah.k.leblanc Date:8/20/2013

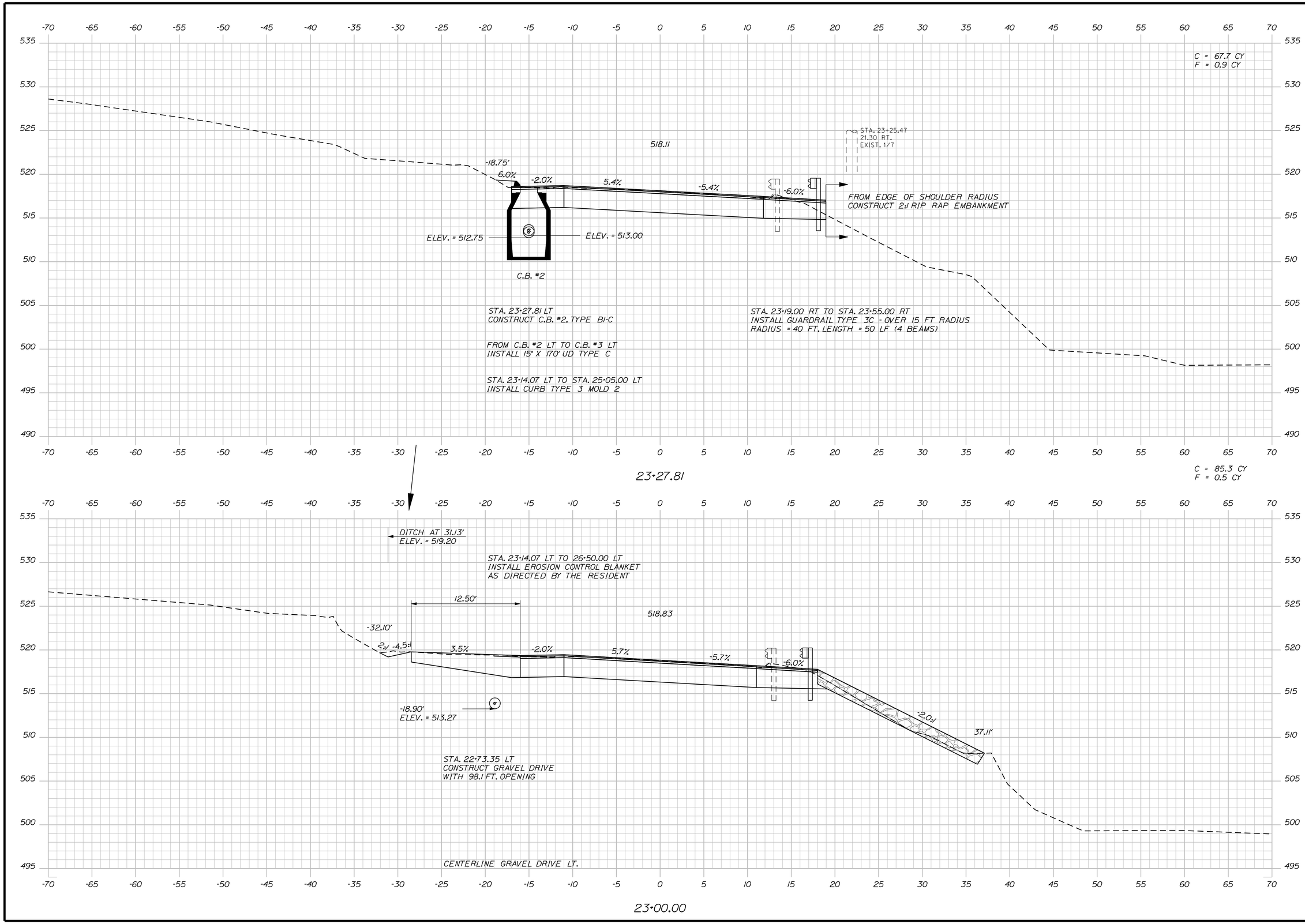

STATE OF MAINE
DEPARTMENT OF TRANSPORTATION

STP-1788(800)X

WIN
17888.00

HIGHWAY PLANS

		BY	DATE
PROJ. MANAGER	E. Martin		
DESIGN-DETAILED	S. LeBlanc	J. Harden	x
CHECKED-REVIEWED			
DESIGN2-DETAILED2			
DESIGN3-DETAILED3			
REVISIONS 1			
REVISIONS 2			
REVISIONS 3			
REVISIONS 4			
FIELD CHANGES			

SIGNATURE

P.E. NUMBER

DATE

LIBERTY
INTERSECTION ROUTES 173\220

CROSS SECTIONS

SHEET NUMBER

21

OF 37

Sta. 23+00.00 to Sta. 23+27.81

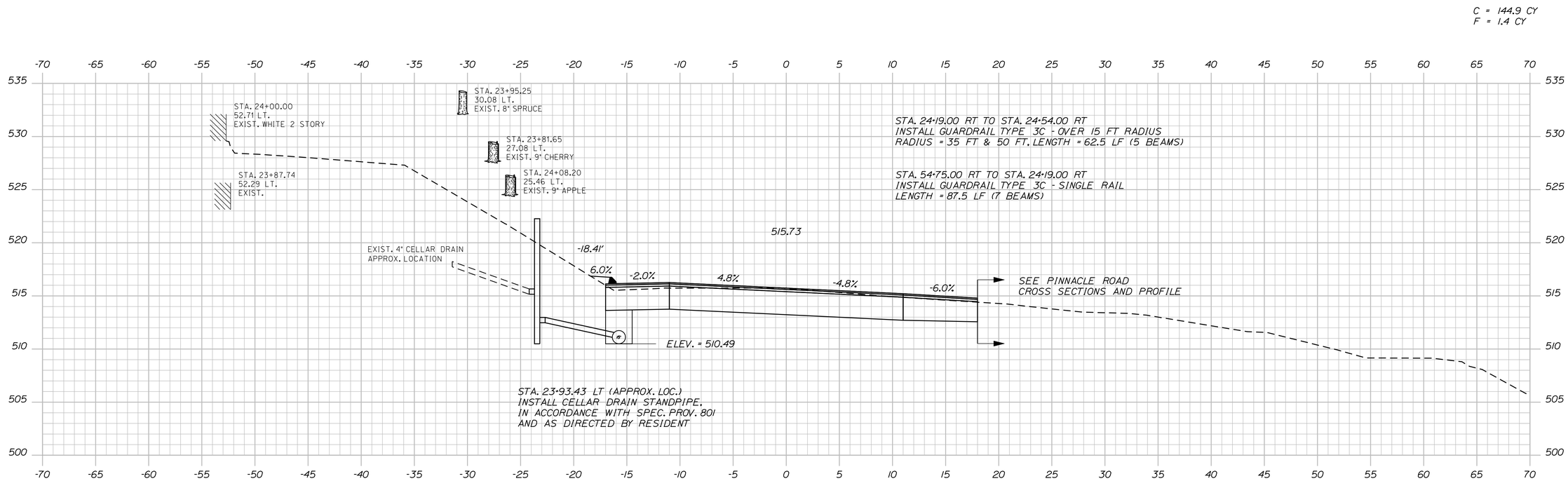

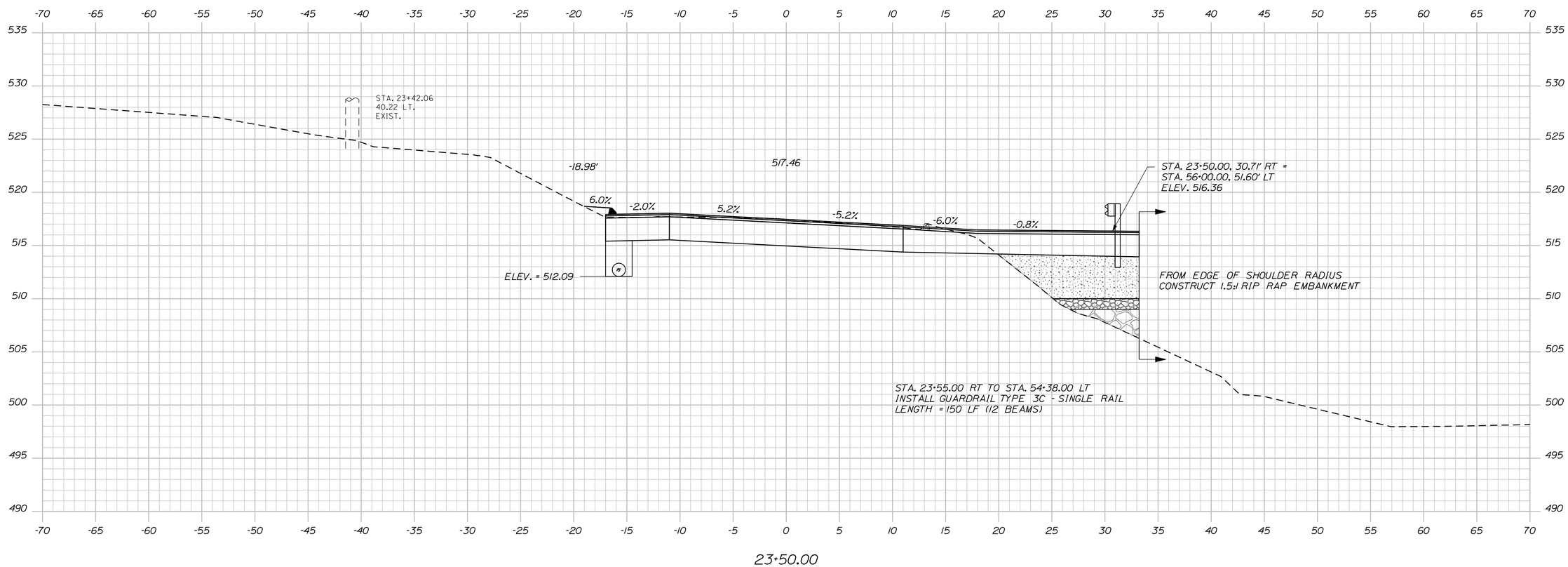

STATE OF MAINE
DEPARTMENT OF TRANSPORTATION

STP-1788(800)X

WIN 17888.00

HIGHWAY PLANS

		BY	DATE
PROJ. MANAGER	E. Martin		
DESIGN-DETAILED	S. LeBlanc	J. Harden	x
CHECKED-REVIEWED	------	------	------
DESIGN-DETAILED2	------	------	------
DESIGN-DETAILED3	------	------	------
REVISIONS 1	------	------	------
REVISIONS 2	------	------	------
REVISIONS 3	------	------	------
REVISIONS 4	------	------	------
FIELD CHANGES	------	------	------

SIGNATURE

P.E. NUMBER

DATE

LIBERTY
INTERSECTION ROUTES 173\220

CROSS SECTIONS

SHEET NUMBER
22
OF 37

Sta. 23+50.00 to Sta. 24+00.00

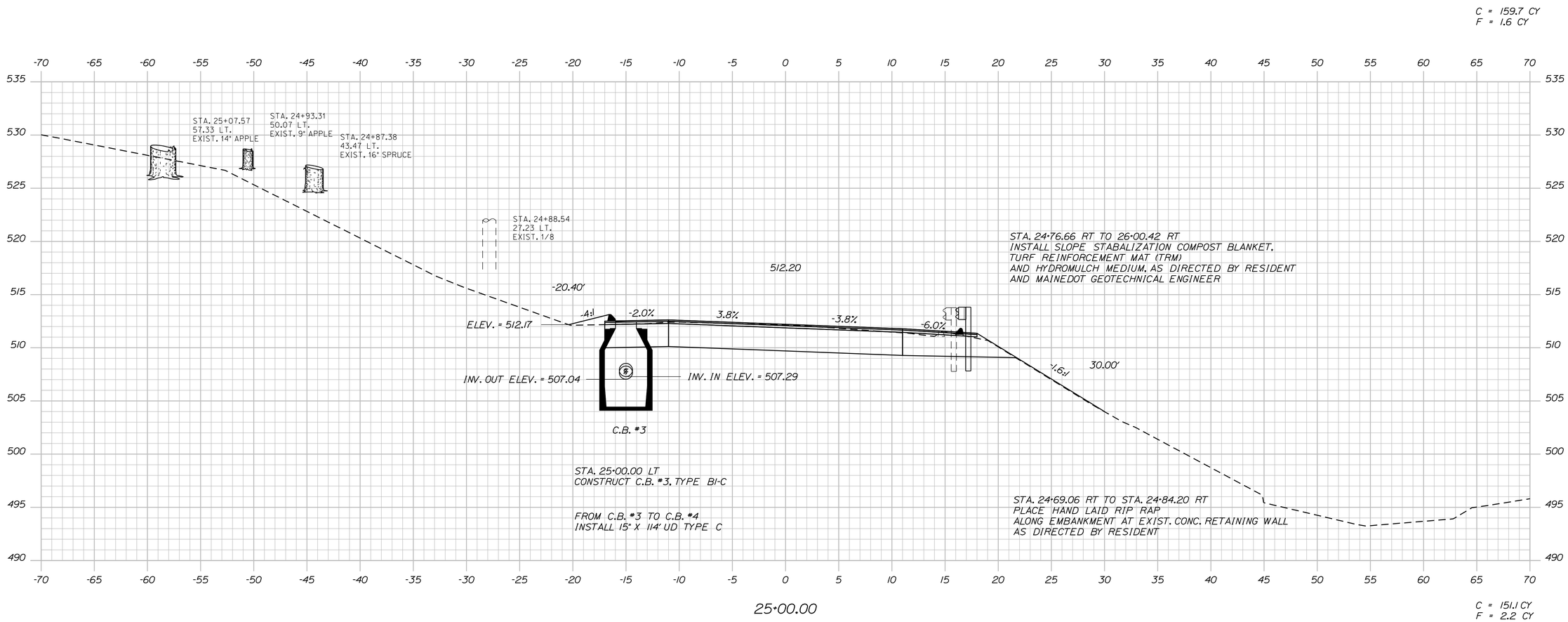

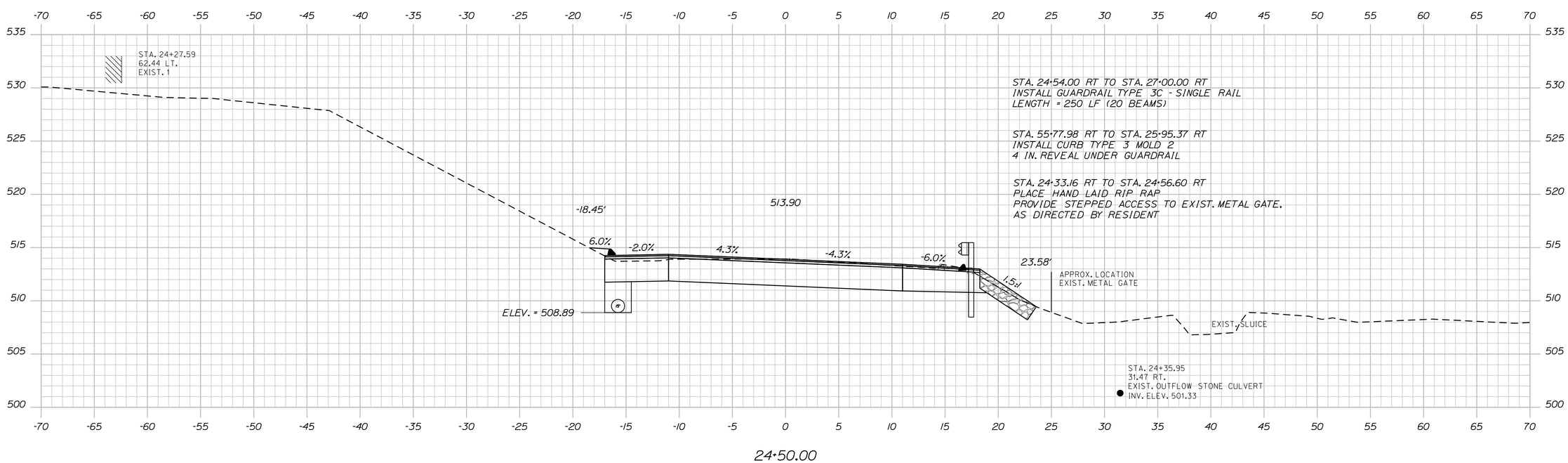

STATE OF MAINE
DEPARTMENT OF TRANSPORTATION

STP-1788(800)X

WIN
17888.00

HIGHWAY PLANS

PROJ. MANAGER	E. Martin	BY	DATE	
DESIGN-DETAILED	S. LeBlanc	J. Harden	x	SIGNATURE
CHECKED-REVIEWED	------	------	------	
DESIGN2-DETAILED2	------	------	------	
DESIGN3-DETAILED3	------	------	------	P.E. NUMBER
REVISIONS 1	------	------	------	
REVISIONS 2	------	------	------	
REVISIONS 3	------	------	------	DATE
REVISIONS 4	------	------	------	
FIELD CHANGES	------	------	------	

LIBERTY
INTERSECTION ROUTES 173\220

CROSS SECTIONS

SHEET NUMBER
23
OF 37

Sta. 24+50.00 to Sta. 25+00.00

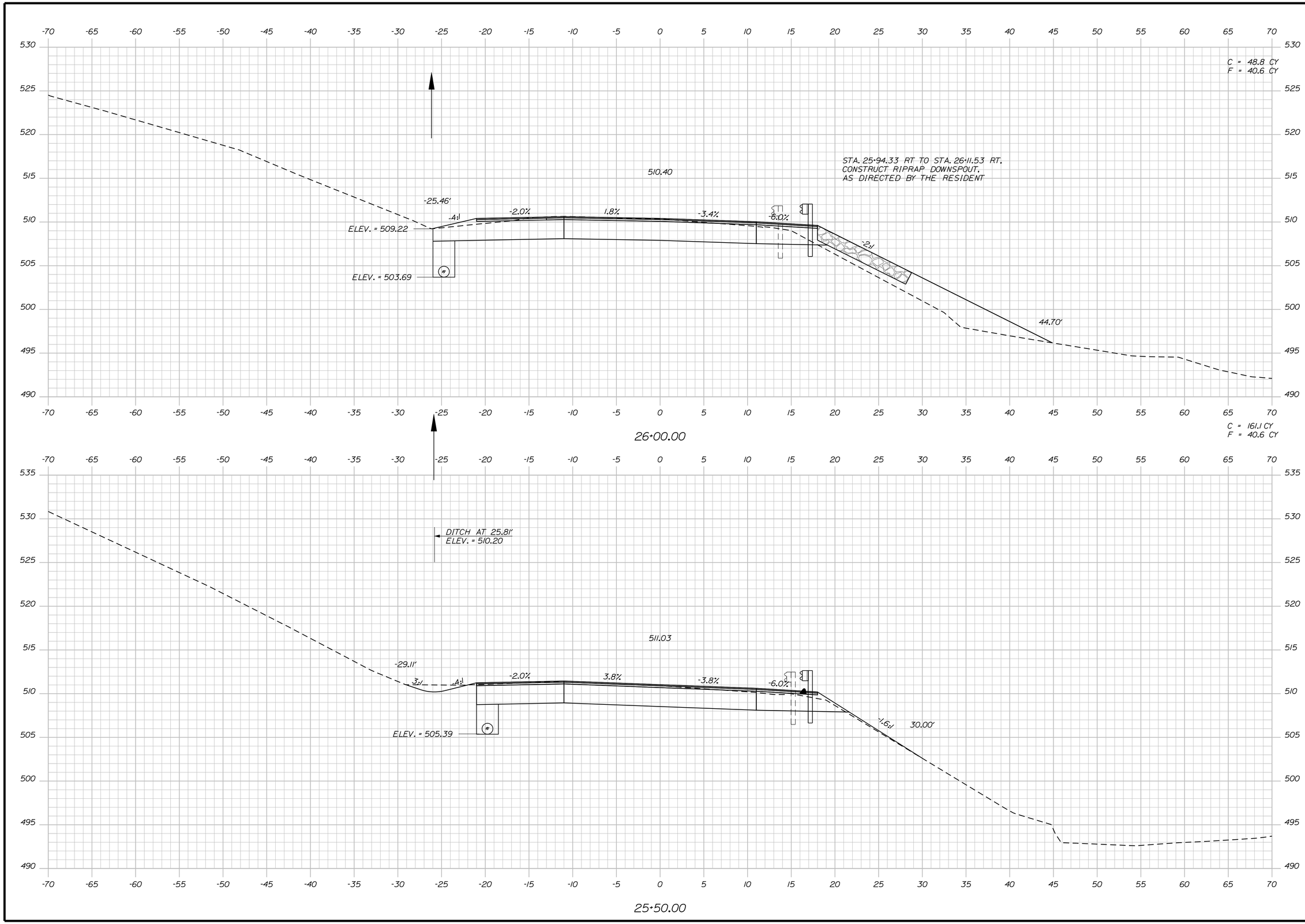

STATE OF MAINE
DEPARTMENT OF TRANSPORTATION

STP-1788(800)X

WIN 17888.00

HIGHWAY PLANS

PROJ. MANAGER	E. Martin	BY	DATE
DESIGN-DETAILED	S. LeBlanc	J. Harden	x
CHECKED-REVIEWED	------	------	------
DESIGN-DETAILED2	------	------	------
DESIGN-DETAILED3	------	------	------
REVISIONS 1	------	------	------
REVISIONS 2	------	------	------
REVISIONS 3	------	------	------
REVISIONS 4	------	------	------
FIELD CHANGES	------	------	------

SIGNATURE

P.E. NUMBER

DATE

LIBERTY
INTERSECTION ROUTES 173\220

CROSS SECTIONS

SHEET NUMBER

24

OF 37

Sta. 25+50.00 to Sta. 26+00.00

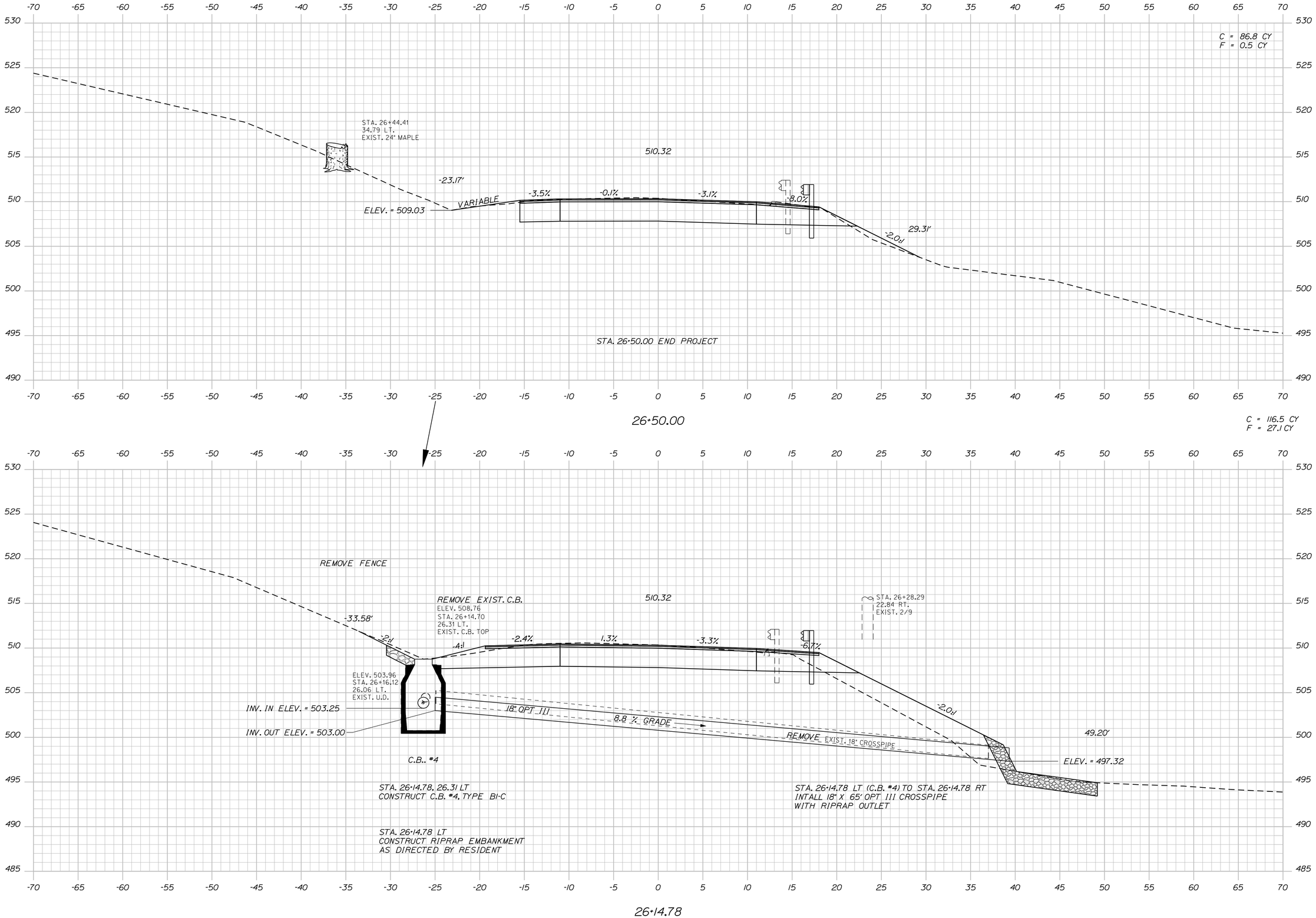

STATE OF MAINE
DEPARTMENT OF TRANSPORTATION

STP-1788(800)X

WIN
17888.00

HIGHWAY PLANS

	BY	DATE
PROJ. MANAGER	E. Martin	
DESIGN-DETAILED	J. Harden	x
CHECKED-REVIEWED	S. LeBlanc	
DESIGN2-DETAILED2		
DESIGN3-DETAILED3		
REVISIONS 1		
REVISIONS 2		
REVISIONS 3		
REVISIONS 4		
FIELD CHANGES		

SIGNATURE

P.E. NUMBER

DATE

LIBERTY
INTERSECTION ROUTES 173\220

CROSS SECTIONS

SHEET NUMBER
25
OF 37

Sta. 26+14.78 to Sta. 26+50.00

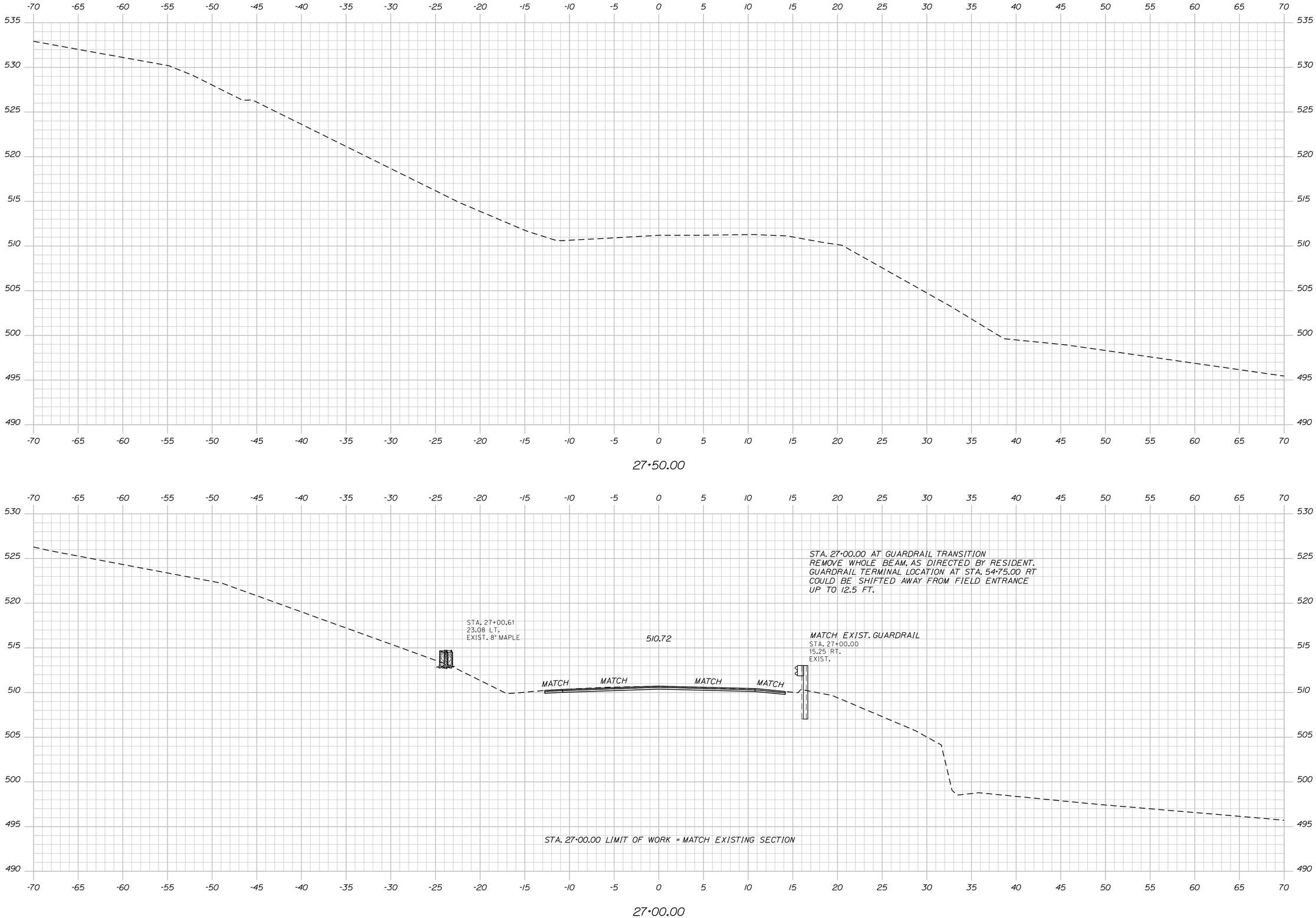

STATE OF MAINE
DEPARTMENT OF TRANSPORTATION

STP-1788(800)X

WIN
17888.00

HIGHWAY PLANS

PROJ. MANAGER	E. Martin	BY	DATE
DESIGN-DETAILED	S. LeBlanc	J. Harden	x
CHECKED-REVIEWED	------	------	------
DESIGN2-DETAILED2	------	------	------
DESIGN3-DETAILED3	------	------	------
REVISIONS 1	------		------
REVISIONS 2	------		------
REVISIONS 3	------		------
REVISIONS 4	------		------
FIELD CHANGES	------		------

SIGNATURE

P.E. NUMBER

DATE

LIBERTY
INTERSECTION ROUTES 173\220

CROSS SECTIONS

SHEET NUMBER

26

OF 37

Sta. 27+00.00 to Sta. 27+50.00

C = 23.6 CY
F = 0.3 CY

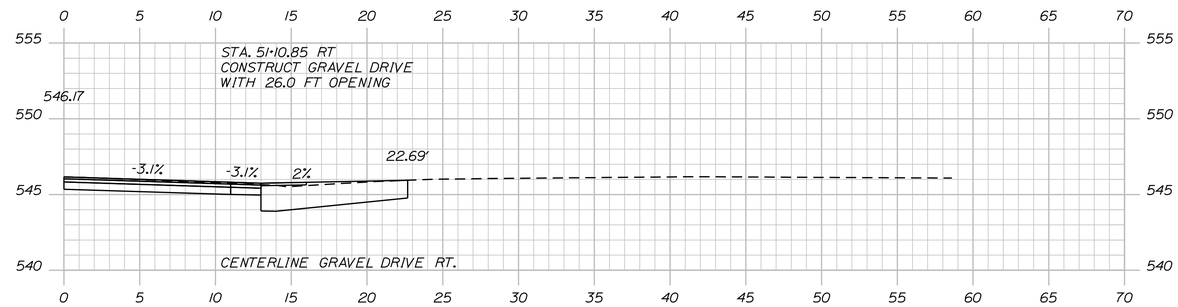

51+10.85

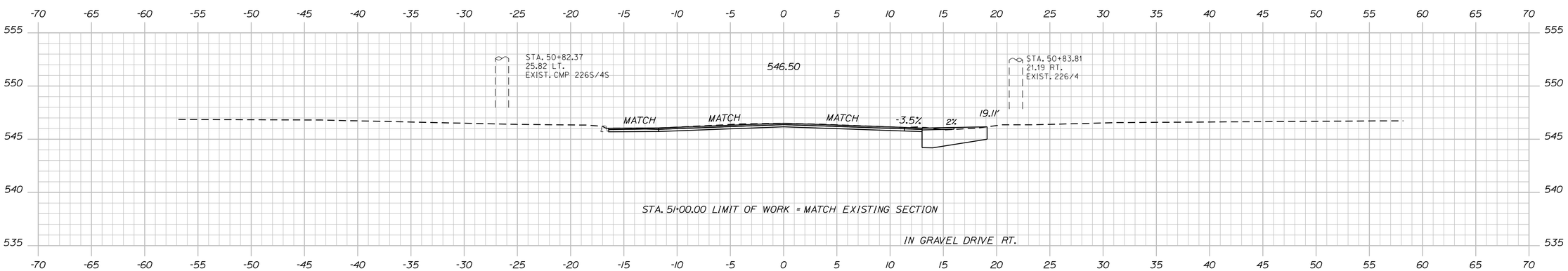

51+00.00

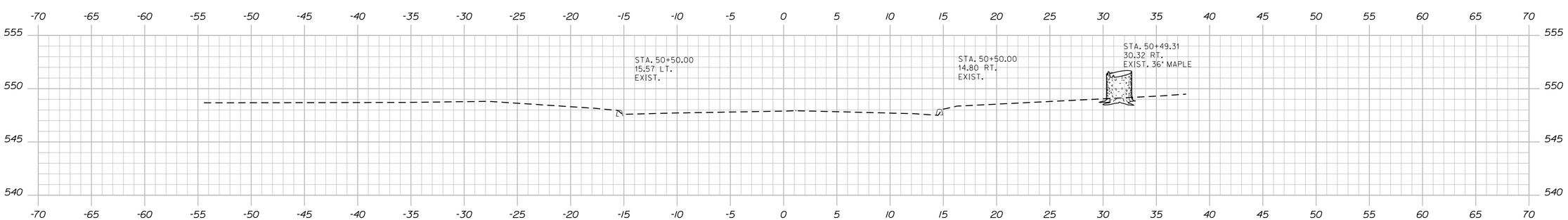

50+50.00

STATE OF MAINE
DEPARTMENT OF TRANSPORTATION

STP-1788(800)X

WIN
17888.00

HIGHWAY PLANS

		BY	DATE
PROJ. MANAGER	E. Merlin		
DESIGN-DETAILED	S. LeBlanc	J. Harden	x
CHECKED-REVIEWED	------	------	------
DESIGN2-DETAILED2	------	------	------
DESIGN3-DETAILED3	------	------	------
REVISIONS 1	------		------
REVISIONS 2	------		------
REVISIONS 3	------		------
REVISIONS 4	------		------
FIELD CHANGES	------		------

SIGNATURE

P.E. NUMBER

DATE

LIBERTY
INTERSECTION ROUTES 173\220

CROSS SECTIONS

SHEET NUMBER
27
OF 37

Filename: ...\027_Xsect_PinnacleRd_50+50_001.dgn Division: HIGHWAY Username: sarah.k.leblanc Date:8/20/2013

Sta. 50+50.00 to Sta. 51+10.85

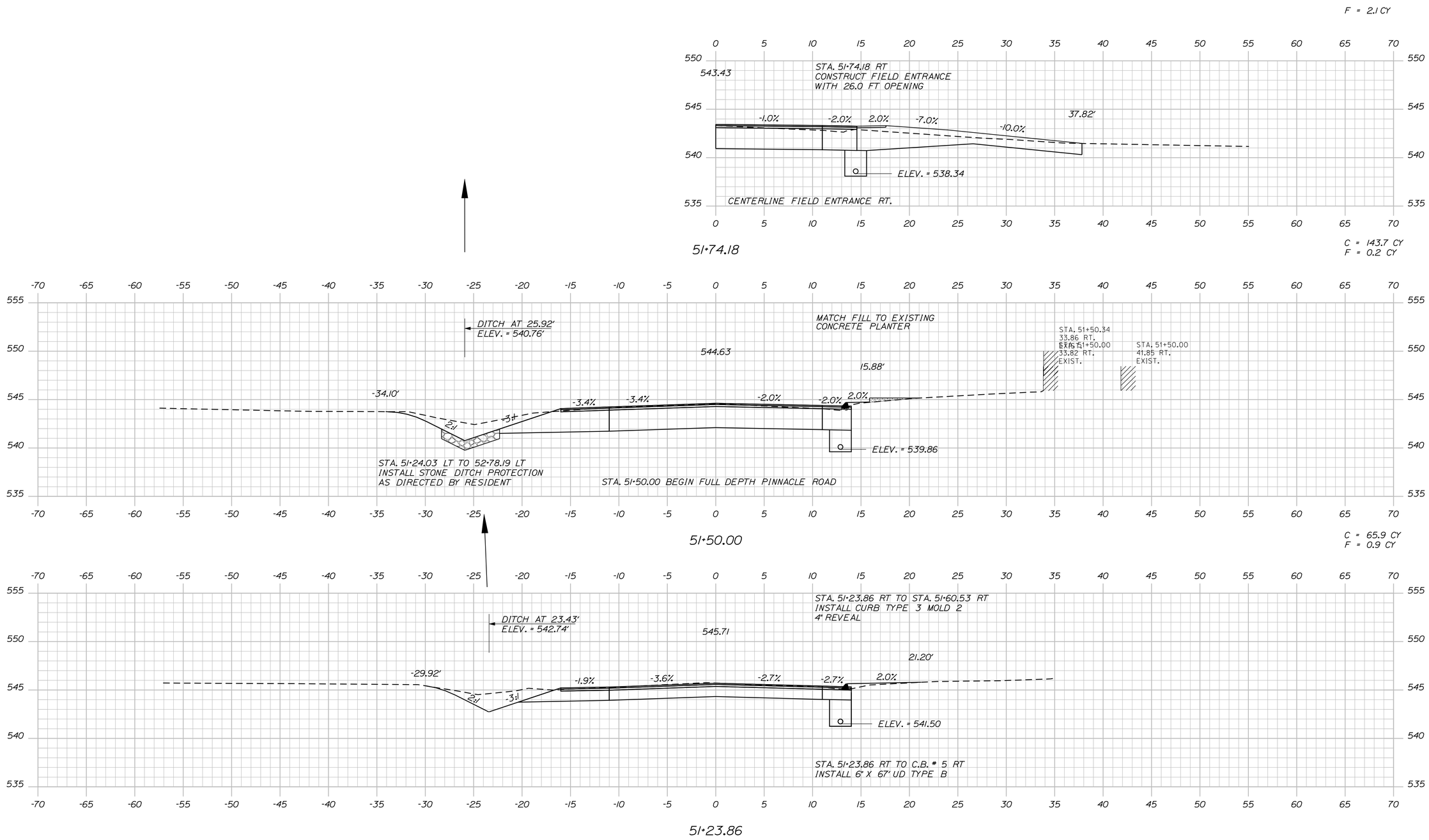

STATE OF MAINE
DEPARTMENT OF TRANSPORTATION

STP-1788(800)X

WIN
17888.00

HIGHWAY PLANS

PROJ. MANAGER	E. Martin	BY	DATE
DESIGN-DETAILED	S. LeBlanc	J. Harden	x
CHECKED-REVIEWED	WEO		
DESIGN2-DETAILED2	ED2		
DESIGN3-DETAILED3	ED3		
REVISIONS 1			
REVISIONS 2			
REVISIONS 3			
REVISIONS 4			
FIELD CHANGES			

SIGNATURE

P.E. NUMBER

DATE

LIBERTY
INTERSECTION ROUTES 173\220

CROSS SECTIONS

SHEET NUMBER
28
OF 37

Sta. 51+23.87 to Sta. 51+74.18

Filename: ...\028_Xsect_PinnacleRd_51+23_002.dgnDivision: HIGHWAY Username: sarah.k.leblanc Date:8/20/2013

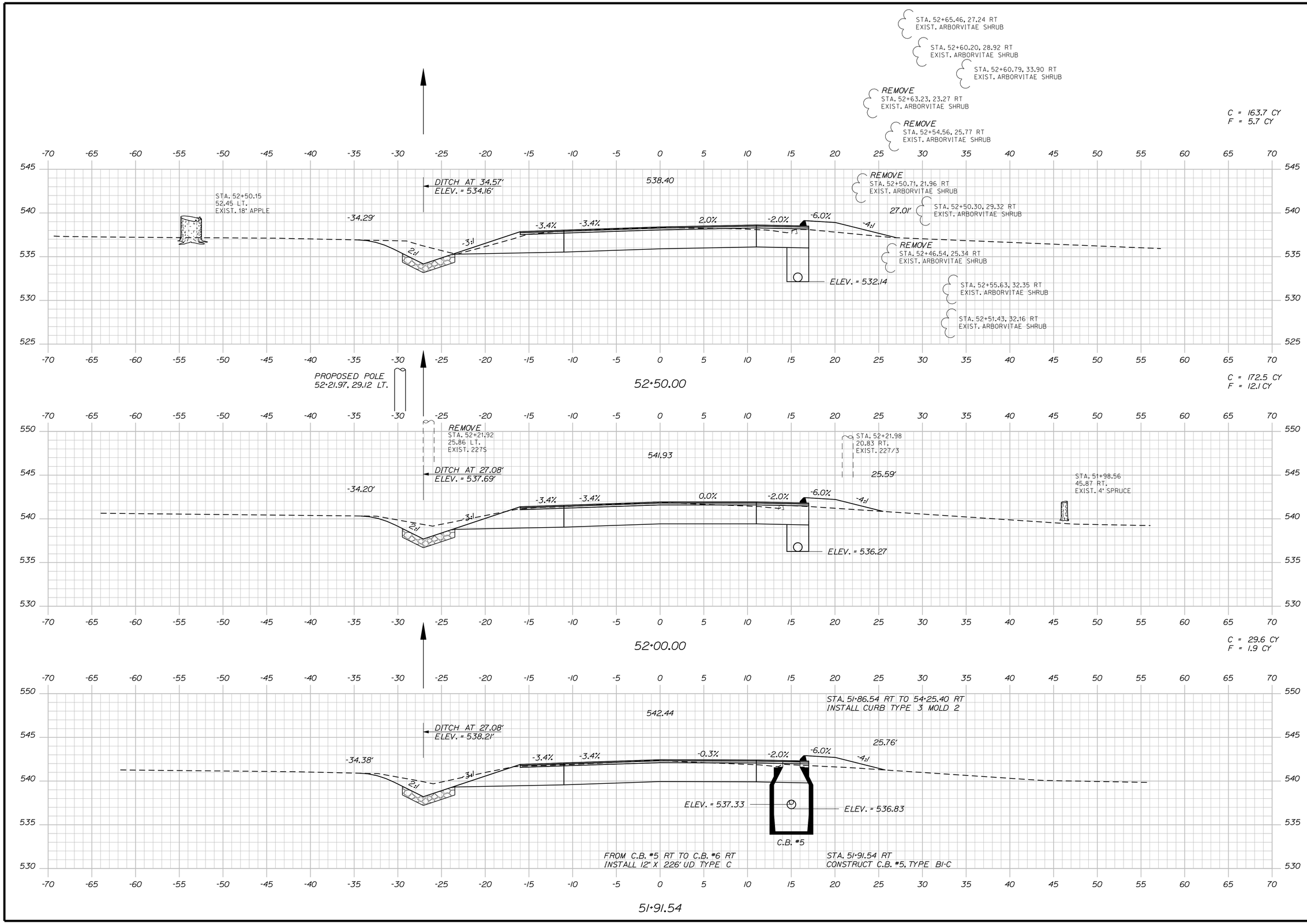

STATE OF MAINE
DEPARTMENT OF TRANSPORTATION

STP-1788(800)X

WIN
17888.00

HIGHWAY PLANS

PROJ. MANAGER	E. Martin	BY	DATE
DESIGN-DETAILED	S. LeBlanc	J. Harden	x
CHECKED-REVIEWED	-----	-----	-----
DESIGN2-DETAILED2	-----	-----	-----
DESIGN3-DETAILED3	-----	-----	-----
REVISIONS 1	-----	-----	-----
REVISIONS 2	-----	-----	-----
REVISIONS 3	-----	-----	-----
REVISIONS 4	-----	-----	-----
FIELD CHANGES	-----	-----	-----

SIGNATURE

P.E. NUMBER

DATE

LIBERTY
INTERSECTION ROUTES 173\220

CROSS SECTIONS

SHEET NUMBER
29
OF 37

Sta. 51+91.70 to Sta. 52+50.00

Filename: ...\029_Xsect_PinnacleRd_51+91_003.dgn Division: HIGHWAY Username: sarah.k.leblanc Date:8/20/2013

C = 321.7 CY
F = 1.7 CY

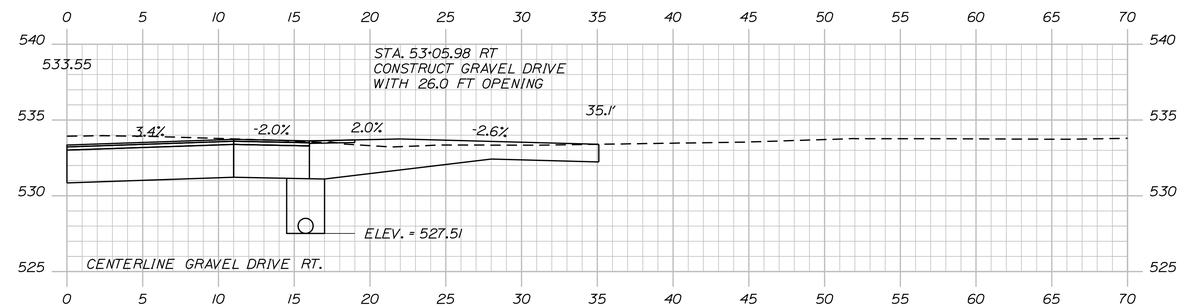

53+05.98

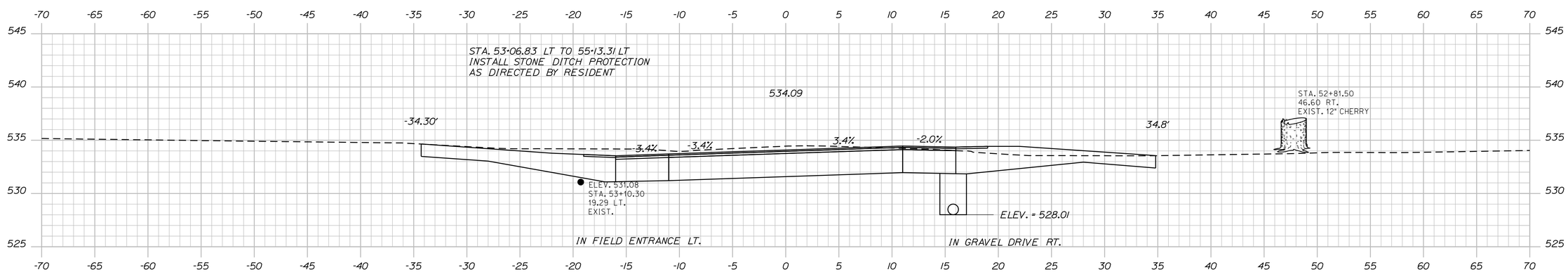

53+00.00

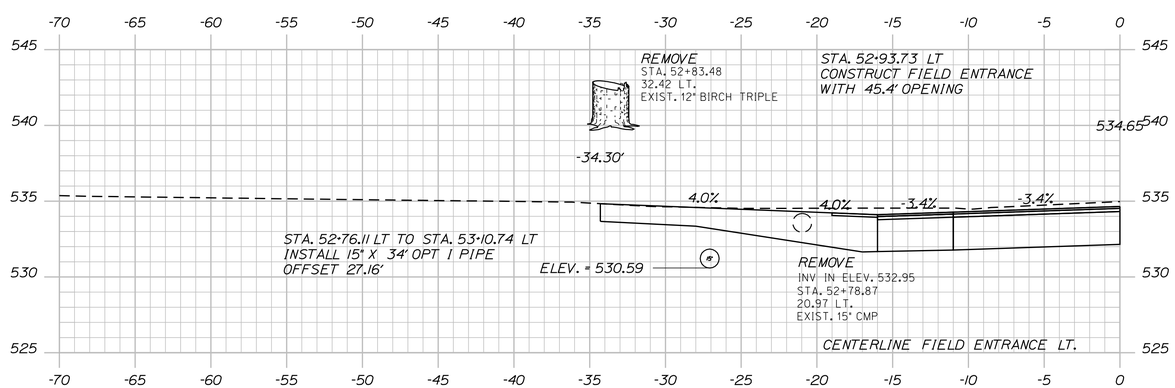

52+93.73

STATE OF MAINE
DEPARTMENT OF TRANSPORTATION

STP-1788(800)X

WIN
17888.00

HIGHWAY PLANS

PROJ. MANAGER	E. Martin	BY	DATE
DESIGN-DETAILED	S. LeBlanc	J. Harden	x
CHECKED-REVIEWED	------	------	------
DESIGN2-DETAILED2	------	------	------
DESIGN3-DETAILED3	------	------	------
REVISIONS 1	------	------	------
REVISIONS 2	------	------	------
REVISIONS 3	------	------	------
REVISIONS 4	------	------	------
FIELD CHANGES	------	------	------

SIGNATURE

P.E. NUMBER

DATE

LIBERTY
INTERSECTION ROUTES 173\220

CROSS SECTIONS

SHEET NUMBER
30
OF 37

Filename: ...\030_Xsect_PinnacleRd_52+93_004.dgn Division: HIGHWAY Username: sarah.k.leblanc Date:8/22/2013

Sta. 52+93.73 to Sta. 53+05.98

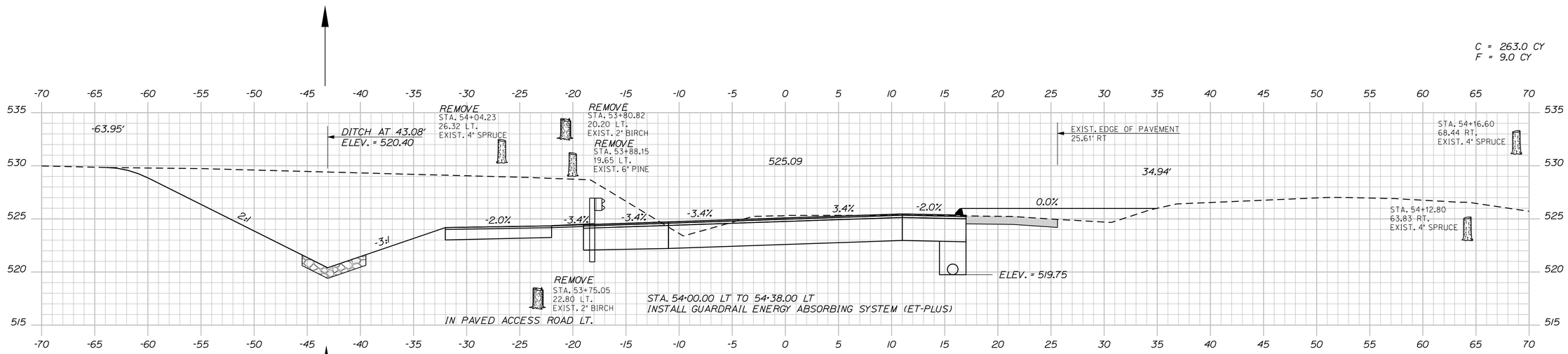

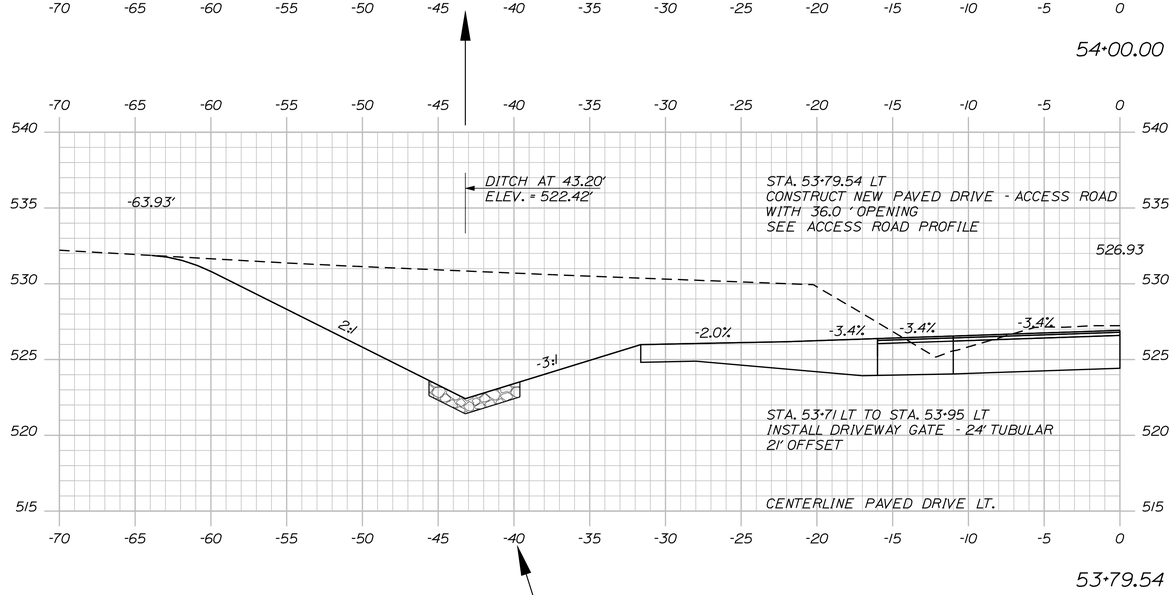

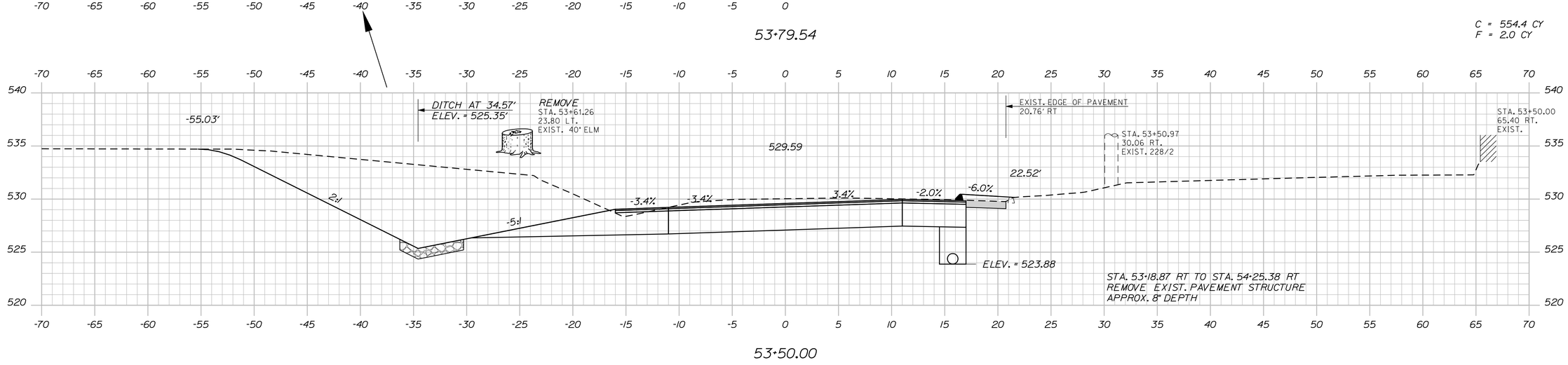

STATE OF MAINE
DEPARTMENT OF TRANSPORTATION

STP-1788(800)X

WIN 17888.00

HIGHWAY PLANS

	BY	DATE
PROJ. MANAGER	E. Martin	
DESIGN-DETAILED	S. LeBlanc	
CHECKED-REVIEWED	J. Harden	x
DESIGN2-DETAILED2		
DESIGN3-DETAILED3		
REVISIONS 1		
REVISIONS 2		
REVISIONS 3		
REVISIONS 4		
FIELD CHANGES		

SIGNATURE

P.E. NUMBER

DATE

LIBERTY
INTERSECTION ROUTES 173\220

CROSS SECTIONS

SHEET NUMBER

31

OF 37

Filename: ...\031_Xsect_PinnacleRd_53+50_005.dgnDivision: HIGHWAY Username: sarah.k.leblanc Date:8/20/2013

Sta. 53+50.00 to Sta. 54+00.00

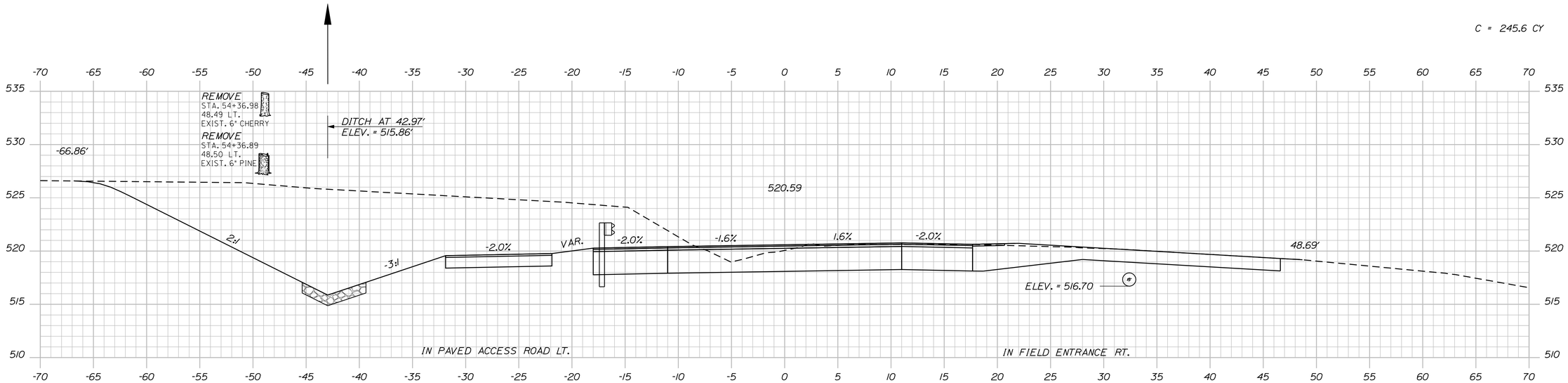

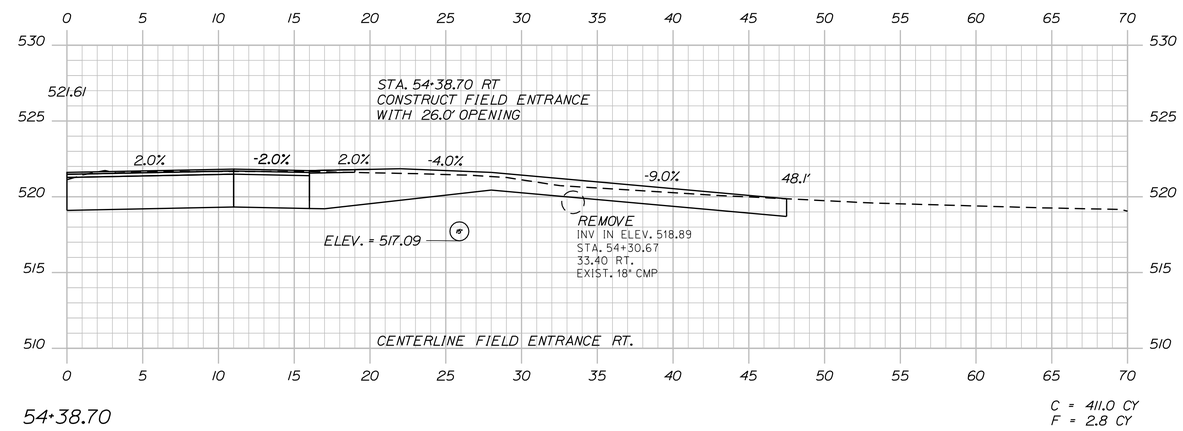

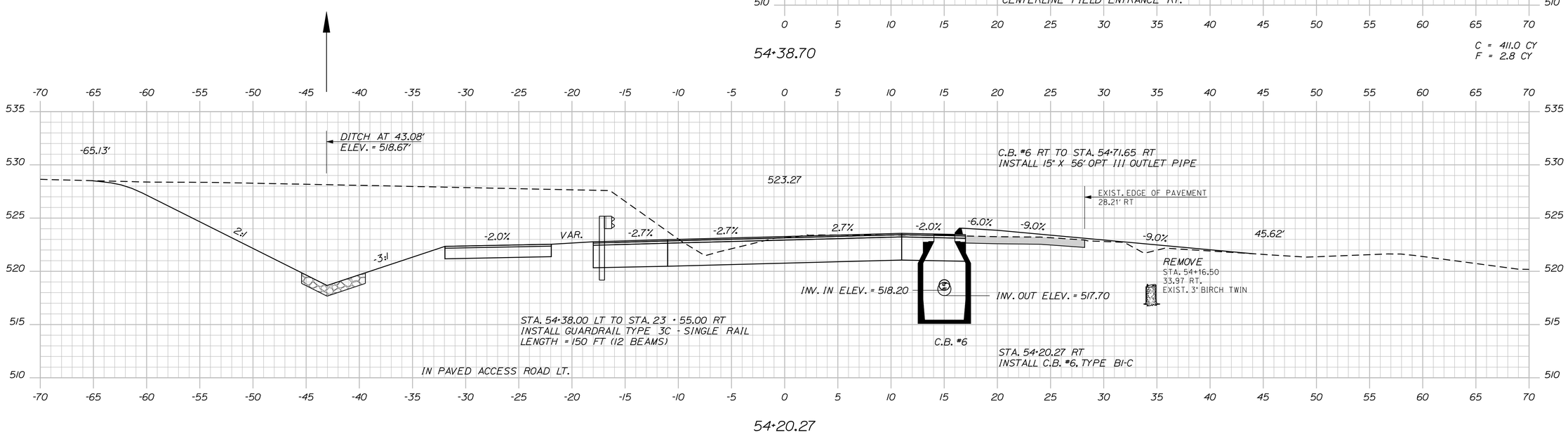

STATE OF MAINE
DEPARTMENT OF TRANSPORTATION

STP-1788(800)X

WIN 17888.00

HIGHWAY PLANS

	BY	DATE
PROJ. MANAGER	E. Merlin	
DESIGN-DETAILED	S. LeBlanc	J. Harden
CHECKED-REVIEWED		
DESIGN2-DETAILED2		
DESIGN3-DETAILED3		
REVISIONS 1		
REVISIONS 2		
REVISIONS 3		
REVISIONS 4		
FIELD CHANGES		

SIGNATURE

P.E. NUMBER

DATE

LIBERTY
INTERSECTION ROUTES 173\220

CROSS SECTIONS

SHEET NUMBER
32
OF 37

Filename: ...\032_Xsect_PinnacleRd_54+20_006.dgnDivision: HIGHWAY Username: sarah.k.leblanc Date:8/20/2013

Sta. 54+20.27 to Sta. 54+50.00

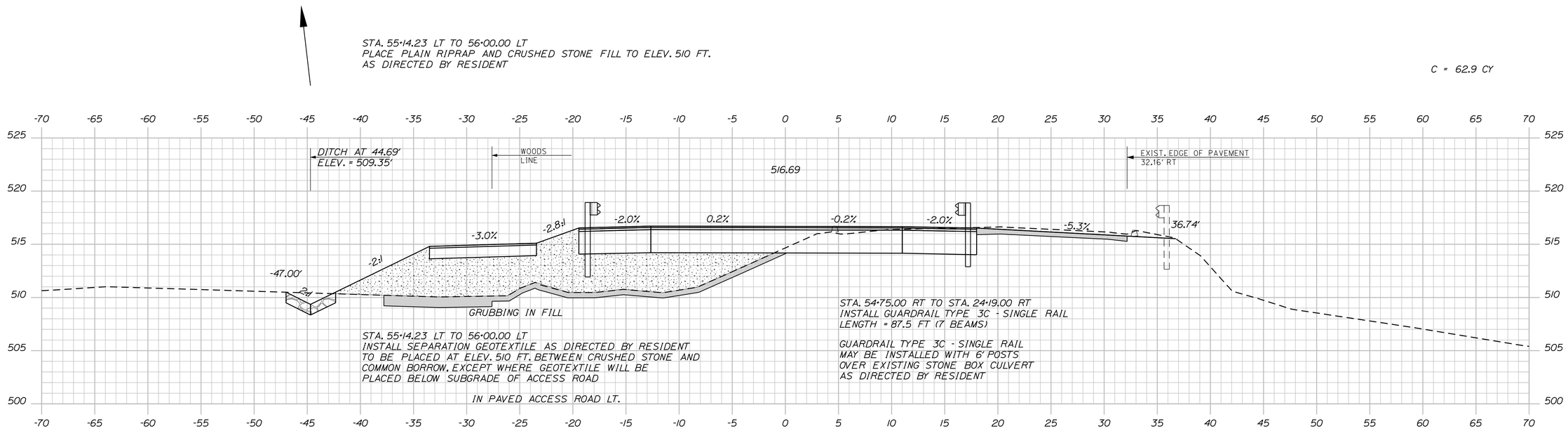

C = X
F = X
G = 13.4 CY

C = 139.9 CY
G = 13.4 CY

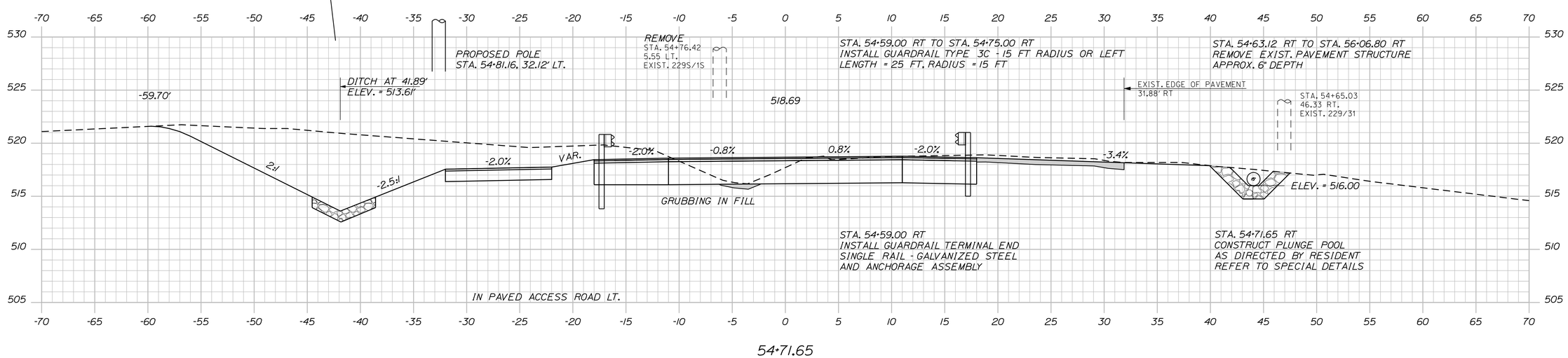

STATE OF MAINE
DEPARTMENT OF TRANSPORTATION

STP-1788(800)X

WIN 17888.00

HIGHWAY PLANS

PROJ. MANAGER	E. Merlin	BY	DATE
DESIGN-DETAILED	S. LeBlanc	J. Harden	x
CHECKED-REVIEWED	------	------	------
DESIGN2-DETAILED2	------	------	------
DESIGN3-DETAILED3	------	------	------
REVISIONS 1	------	------	------
REVISIONS 2	------	------	------
REVISIONS 3	------	------	------
REVISIONS 4	------	------	------
FIELD CHANGES	------	------	------

SIGNATURE

P.E. NUMBER

DATE

LIBERTY
INTERSECTION ROUTES 173\220

CROSS SECTIONS

SHEET NUMBER
33
OF 37

Filename: ...\033_Xsect_PinnacleRd_54+71_007.dgnDivision: HIGHWAY Username: sarah.k.leblanc Date:9/10/2013

Sta. 54+71.65 to Sta. 55+00.00

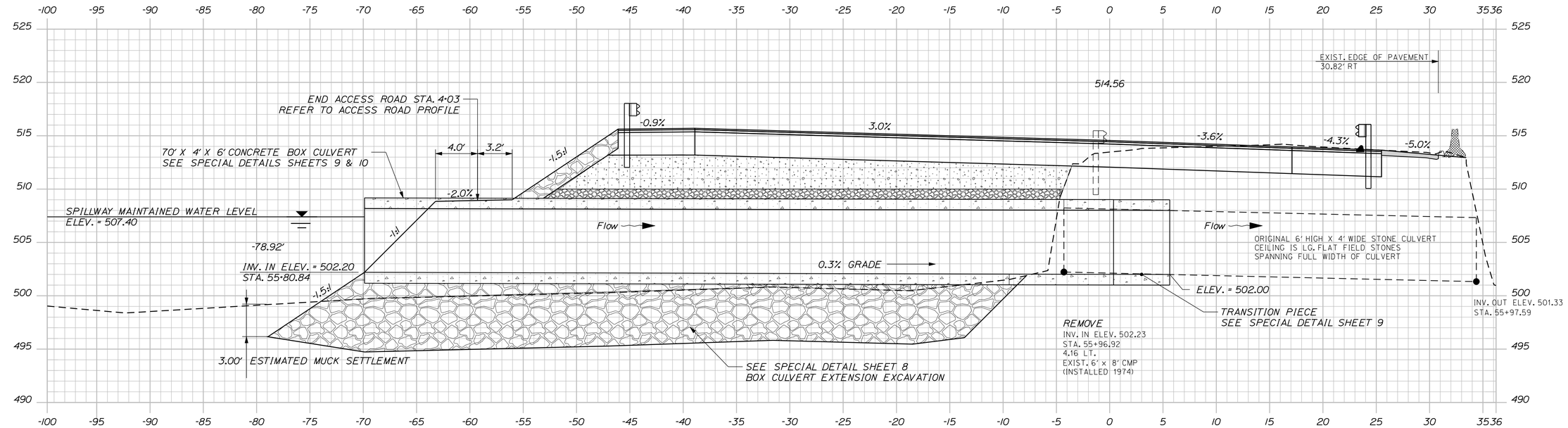

55+96.44 CENTERLINE ALONG BOX CULVERT EXTENSION THROUGH EXISTING CRIB CENTERLINE - SKEWED

C = 93.1 CY
F = 0.2 CY

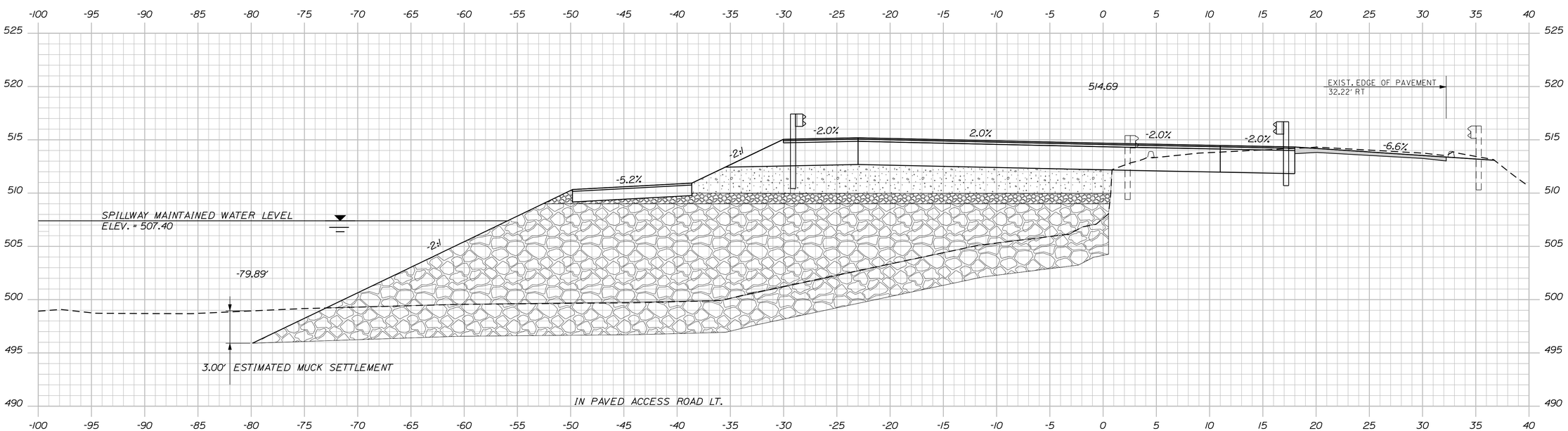

55+50.00

STATE OF MAINE
DEPARTMENT OF TRANSPORTATION

STP-1788(800)X

WIN 17888.00

HIGHWAY PLANS

PROJ. MANAGER	E. Martin	BY	DATE	
DESIGN-DETAILED	S. LeBlanc	J. Harden	x	SIGNATURE
CHECKED-REVIEWED	------	------	------	
DESIGN2-DETAILED2	------	------	------	P.E. NUMBER
DESIGN3-DETAILED3	------	------	------	
REVISIONS 1	------	------	------	
REVISIONS 2	------	------	------	DATE
REVISIONS 3	------	------	------	
REVISIONS 4	------	------	------	
FIELD CHANGES	------	------	------	

LIBERTY
INTERSECTION ROUTES 173\220

CROSS SECTIONS

SHEET NUMBER
34
OF 37

Sta. 55+50.00 to Sta. 55+96.44

Filename: ...\034_Xsect_PinnacleRd_55+50_008.dgn Division: HIGHWAY Username: sarah.k.leblanc Date:9/10/2013

Filename: ...\035_Xsect_PinnacleRd_56+00_009.dgnDivision: HIGHWAY Username: sarah.k.leblanc Date:9/10/2013

C = 60.4 CY

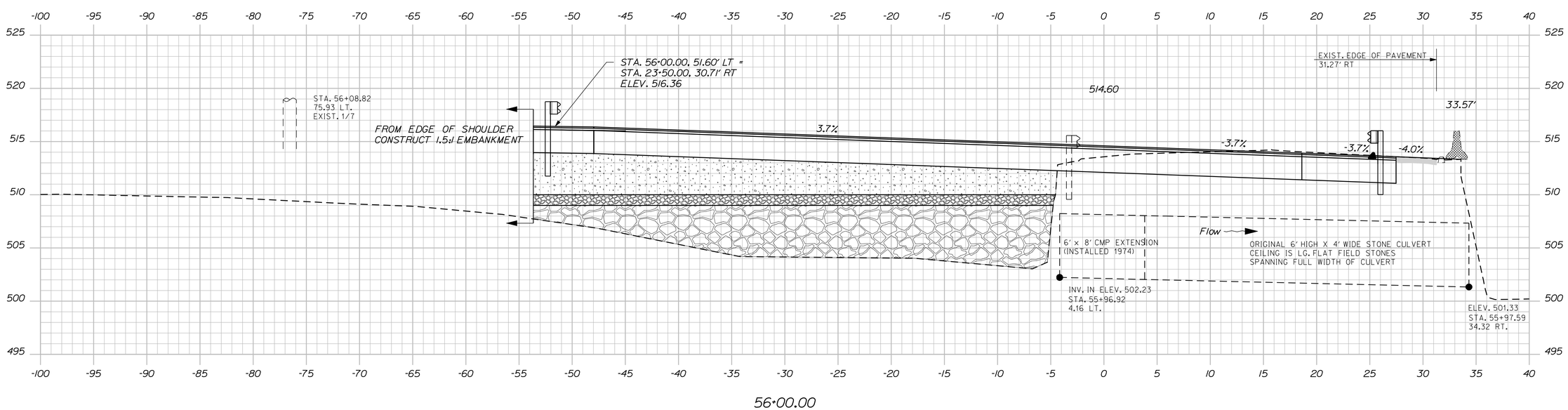

PROJ. MANAGER	E. Martin	BY	DATE
DESIGN-DETAILED	S. LeBlanc	J. Harden	x
CHECKED-REVIEWED	------	------	------
DESIGN2-DETAILED2	------	------	------
DESIGN3-DETAILED3	------	------	------
REVISIONS 1	------	------	------
REVISIONS 2	------	------	------
REVISIONS 3	------	------	------
REVISIONS 4	------	------	------
FIELD CHANGES	------	------	------

SIGNATURE

P.E. NUMBER

DATE

STATE OF MAINE
DEPARTMENT OF TRANSPORTATION

STP-1788(800)X

WIN
17888.00

HIGHWAY PLANS

LIBERTY
INTERSECTION ROUTES 173\220

CROSS SECTIONS

SHEET NUMBER

35

OF 37

Sta. 56+00.00 to Sta. 56+00.00

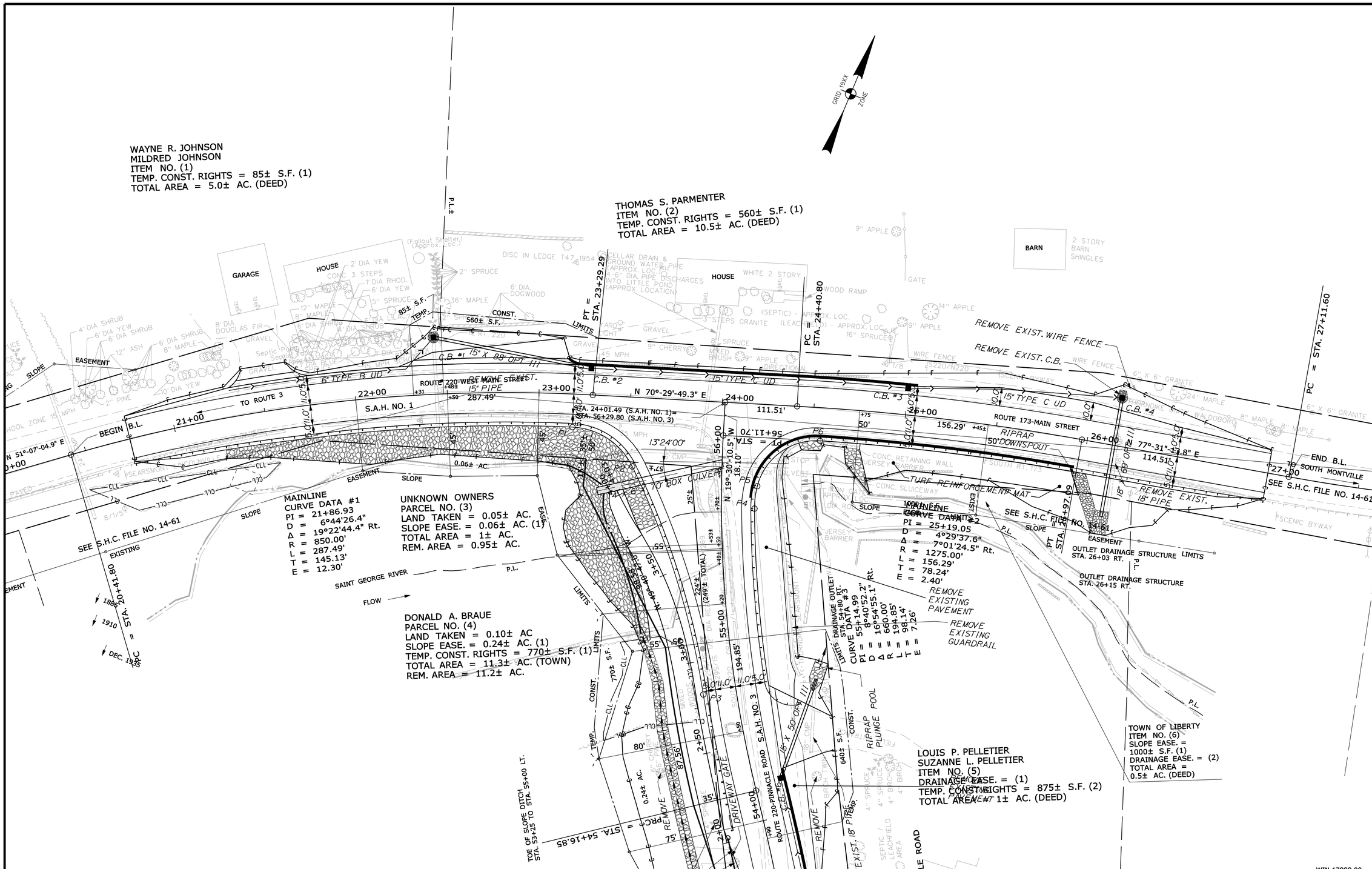

THIS PLAN WAS PREPARED IN CONNECTION WITH THE DEPARTMENT'S ACQUISITION OF REAL PROPERTY FOR TRANSPORTATION PURPOSES. IT CANNOT BE USED TO ESTABLISH LEGAL BOUNDARIES BETWEEN ABUTTING PROPERTY OWNERS.

SYMBOLS

- ● IP or ● PIPE (IRON PIPE or PIN FOUND)
- ☐ S.T. (SEPTIC TANK)
- ⊠ (ROW MONUMENT)
- ⊼BM (TRAVERSE POINT)
- ○WELL (WELL)
- GRADING LIMIT LINE
- CONSTRUCTION LIMIT LINE
- PROPERTY LINE
- LIMITS OF "RIGHT PORTION (L.O.W.P.)
- NEW RIGHT OF WAY
- NEW ROW WITHIN EXIST. ROW
- CONTROL OF ACCESS
- WATER LINE
- GAS LINE
- ELECTRIC LINE
- TELEPHONE LINE
- SEWER LINE

ITEM	TECH	CHECKED
BASE MAP		
EXIST. R/W	D.N.B.	D.N.B.
PROP. LINES	D.N.B.	D.N.B.
AREAS	T.J.K.	

STATE OF MAINE
DEPARTMENT OF TRANSPORTATION
16 STATE HOUSE STATION - AUGUSTA, ME 04333-0016
LIBERTY
RIGHT OF WAY MAP

REVISIONS

NO.	DATE	DESCRIPTION	BY

PLAN FILED IN PLAN BOOK PAGE COUNTY RECORD

NO.	GRANTOR	INSTRUMENT	DATE	BOOK	PAGE
		COND.	8/13/13	3791	151

DAVID BERNHARDT
COMMISSIONER
KENNETH L. SWEENEY
CHIEF ENGINEER

DATE

STATE OF MAINE
PETER A. BELANGER
1341
PROFESSIONAL LAND SURVEYOR

STATE AID HIGHWAY NOS. 1 & 3
ROUTES 173 & 220
LIBERTY WALDO COUNTY
FEDERAL PROJECT NO. STP-1788(800)X

MAY 2013	RIGHT-OF-WAY MAP	D.O.T. FILE NO. 14-199
SCALE 1" = 25'	SHEET 1 OF 2	

SHEET NUMBER
36
OF 37

Filename: ...\00\ROW\MSTA\001_RWPLAN1.dgn Division: HIGHWAY Username: sarah.k.leblanc Date:8/20/2013

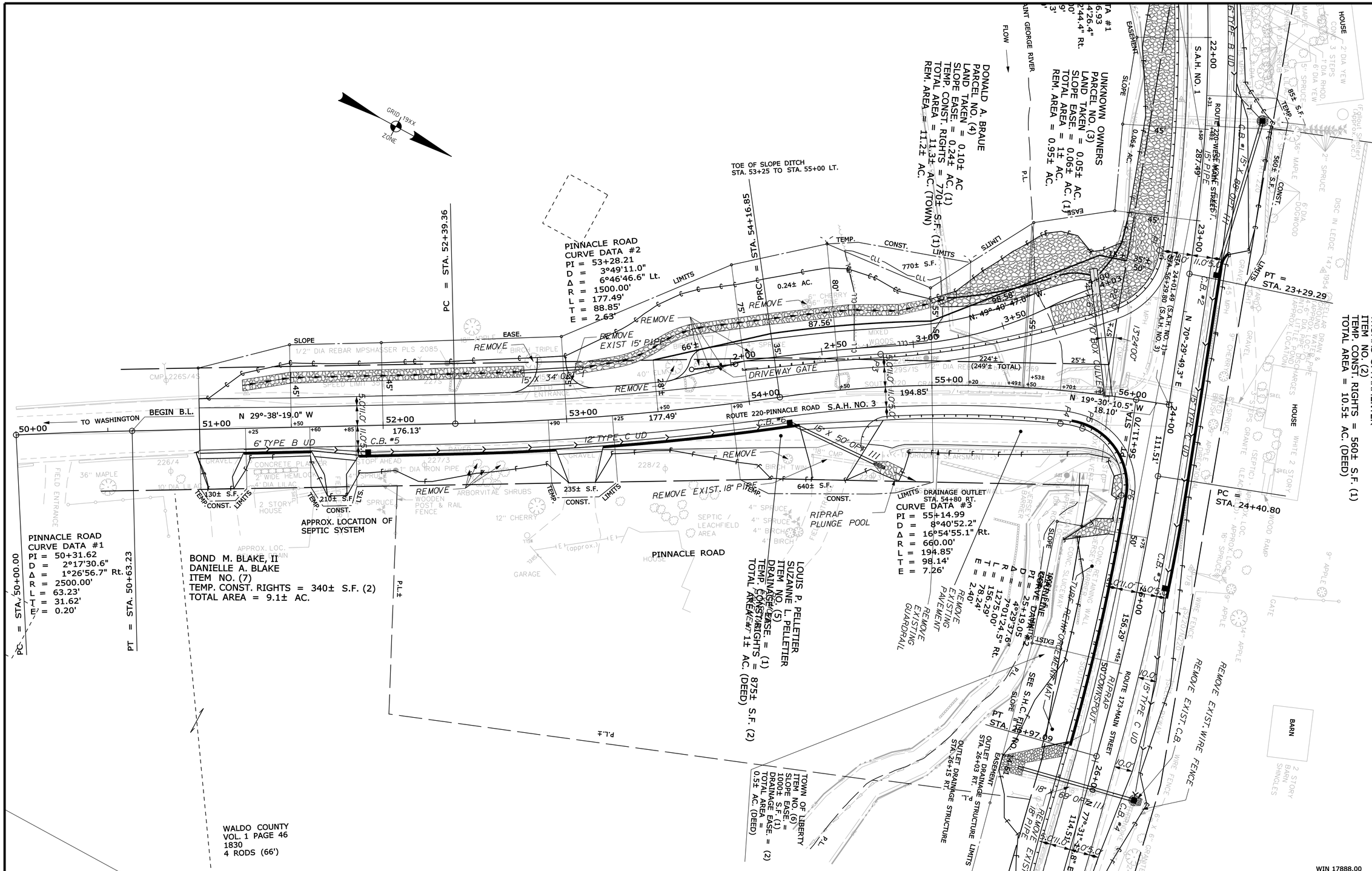

THIS PLAN WAS PREPARED IN CONNECTION WITH THE DEPARTMENT'S ACQUISITION OF REAL PROPERTY FOR TRANSPORTATION PURPOSES. IT CANNOT BE USED TO ESTABLISH LEGAL BOUNDARIES BETWEEN ABUTTING PROPERTY OWNERS.

SYMBOLS

- ○ WELL (WELL)
- GRADING LIMIT LINE
- CONSTRUCTION LIMIT LINE
- PROPERTY LINE
- LIMITS OF "RIGHT PORTION (L.O.R.P.)
- EXISTING RIGHT OF WAY
- NEW RIGHT OF WAY
- NEW ROW WITHIN EXIST. ROW
- CONTROL OF ACCESS

THOMAS S. PARMENTER
ITEM NO. (2)
TEMP. CONST. RIGHTS = 560± S.F. (1)
TOTAL AREA = 10.5± AC. (DEED)

ITEM	TECH	CHECKED
BASE MAP		
EXIST. R/W	D.N.B.	
PROP. LINES	D.N.B.	
AREAS	T.J.K.	

STATE OF MAINE
DEPARTMENT OF TRANSPORTATION
16 STATE HOUSE STATION - AUGUSTA, ME 04333-0016
LIBERTY
RIGHT OF WAY MAP

REVISIONS

NO.	DATE	DESCRIPTION	BY

PLAN FILED IN PLAN BOOK	PAGE	COUNTY RECORD			
NO.	GRANTOR	INSTRUMENT	DATE	BOOK	PAGE
		COND.	8/13/13	3791	151

DAVID BERNHARDT
COMMISSIONER
KENNETH L. SWEENEY
CHIEF ENGINEER

DATE

STATE OF MAINE
PETER A. BELANGER
1341
PROFESSIONAL
LAND SURVEYOR

STATE AID HIGHWAY NOS. 1 & 3
ROUTES 173 & 220
LIBERTY WALDO COUNTY
FEDERAL PROJECT NO. STP-1788(800)X

MAY 2013	RIGHT-OF-WAY MAP	D.O.T. FILE NO. 14-199
SCALE 1" = 25'	SHEET 2 OF 2	

SHEET NUMBER
37
OF 37

Filename: ...\00\ROW\MSTA\002_RWPLAN2.dgn Division: HIGHWAY Username: sarah.k.leblanc Date:8/20/2013