STATE OF MAINE
DEPARTMENT OF TRANSPORTATION

BRIDGEWATER
AROOSTOOK COUNTY
BOUNDARY BRIDGE
OVER
PRESTILE STREAM
BOUNDARY LINE ROAD
FEDERAL AID PROJECT NO. BH-1786(900)X
PROJECT LENGTH 0.057 mi.
BRIDGE NO. 3734

SPECIFICATIONS

Design: Load and Resistance Factor Design per AASHTO LRFD Bridge Design Specifications, Sixth Edition 2012, with Interim Specifications through 2012.

DESIGN LOADING

Live Load ..... HL - 93 Modified

TRAFFIC DATA

Current (2011) AADT	490
Future (2031) AADT	590
DHV - % of AADT	9
Design Hour Volume	53
Heavy Trucks (% of AADT)	28
Heavy Trucks (% of DHV)	19
Directional Distribution (% of DHV)	54
18 kip Equivalent P 2.0	143
18 kip Equivalent P 2.5	136
Design Speed (mph)	35

HYDROLOGIC DATA

Drainage Area	133.95 sq mi
Design Discharge (Q50)	6193.4 cfs
Check Discharge (Q100)	7009.6 cfs
Headwater Elevation (Q50)	326.32 ft
Headwater Elevation (Q100)	326.92 ft
Discharge Velocity (Q50)	9.52 fps
Discharge Velocity (Q100)	10.22 fps
Headwater Elevation (Q1.1)	320.96 ft
Discharge Velocity (Q1.1)	3.89 fps
Headwater Elevation (Q25)	325.71 ft

MATERIALS

Concrete:	
Barriers, Curbs, Sidewalks & Transition Barriers	Class "LP"
Precast	Class "P"
Fill	"Fill"
All Other	Class "A"
Reinforcing Steel	ASTM A 615/A 615M, Grade 60
Epoxy Coated Reinforcing Steel	ASTM A 775/A 775M, Grade 60
Structural Steel:	
All Material (except as noted)	ASTM A 710, Grade 50W (unpainted)
High Strength Bolts	ASTM A 325, Type 3
Anchor Rods	ASTM F 1554, Grade 105

BASIC DESIGN STRESSES

Concrete	f 'c = 4,350 psi
Precast Concrete	f 'c = 4,350 psi
	f 'ci = 3,400 psi
Reinforcing Steel	f y = 60,000 psi
Structural Steel:	
ASTM A 710, Grade 50W	F y = 50,000 psi
ASTM A 325	F μ = 120,000 psi

LIST OF DRAWINGS

Title Sheet	1
Estimated Quantities & General Construction Notes	2
General Plan	3
Profiles	4
Boring Location Plan	5
Interpretive Subsurface Profile	6
Boring Logs	7-8
Highway Approach Cross - Sections	9-16
Precast Abutment	17
Precast Abutment Reinforcement	18
End Diaphragm	19
Abutment Details	20
Temporary Bearing	21
Framing Plan	22
Girder Details	23
Precast Deck Units	24
Superstructure	25
Bridge Drain Details	26
Reinforcing Steel Schedule	27
Traffic Control Plan	28
Right of Way Map	29

UTILITIES

Maine Public Service Company
Northern New England Telephone Operations LLC

MAINTENANCE OF TRAFFIC

Maintain two-way traffic over local roads, with one lane closure at Young Brook Bridge on East Blaine Road using two-way yield.

PROJECT LOCATION:	Near the intersection of Boundary Line Road and East Blaine Road. Latitude 46°26'56.76", Longitude -67°47'19.82"
PROGRAM AREA:	Bridge
OUTLINE OF WORK:	Bridge replacement

WIN 17869.00

BH-1786(900)X

STATE OF MAINE
DEPARTMENT OF TRANSPORTATION

APPROVED

COMMISSIONER: 5327 — DATE 3/20/13

CHIEF ENGINEER: Bruce L. Gerrity — DATE 3/20/13

STATE OF MAINE · Michael Harry Wight · 8089 · LICENSED · PROFESSIONAL ENGINEER

Michael Wight

P.E. NUMBER 8089

SIGNATURE

3/15/2013

DATE

PROJECT INFORMATION

PROGRAM	BRIDGE
PROJECT MANAGER	STEVE BODGE
DESIGNER	BRIAN REEVES
CONSULTANT	
PROJECT RESIDENT	
CONTRACTOR	
PROJECT COMPLETION DATE	

BRIDGEWATER BOUNDARY BRIDGE

TITLE SHEET

SHEET NUMBER

1

OF 29

Filename: \00\BRIDGE\MSTA\001_Title.dgn Division: BRIDGE Username: david.show Date: 3/14/2013

ESTIMATED QUANTITIES			
ITEM NO.	DESCRIPTION	QUANTITY	UNIT
107.51	PROSECUTION OF WORK - INITIAL SCHEDULE	1	LS
107.52	PROSECUTION OF WORK - MONTHLY UPDATE	3	EA
107.54	PROSECUTION OF WORK - WEEKLY UPDATES	2	EA
202.10	REMOVE EX SUPERSTRUCTURE (PROP OF CONTR) (150 CY Conc.)	1	LS
202.12	REMOVING EXISTING STRUCTURAL CONCRETE	275	CY
203.20	COMMON EXCAVATION	400	CY
203.21	ROCK EXCAVATION	10	CY
203.24	COMMON BORROW	400	CY
203.25	GRANULAR BORROW	450	CY
203.26	GRAVEL BORROW	85	CY
206.082	STRUCTURAL EARTH EXCAVATION - MAJOR STRUCTURES	1435	CY
304.09	AGGREGATE BASE COURSE - CRUSHED - Type B	725	CY
403.208	HOT MIX ASPHALT 12.5 MM HMA SURFACE	117	T
403.213	HOT MIX ASPHALT 12.5 MM BASE	220	T
409.15	BITUMINOUS TACK COAT - APPLIED	67	G
461.13	LIGHT CAPITAL PAVING	750	T
501.231	DYNAMIC LOADING TEST	2	EA
501.50	STEEL H-BEAM PILES 89 LBS/FT. DELIVERED	400	LF
501.501	STEEL H-BEAM PILES 89 LBS/FT. IN PLACE	400	LF
501.903	PILE TIPS. ROCK INJECTOR POINT	12	EA
501.91	PILE SPLICES	4	EA
501.92	PILE DRIVING EQUIPMENT MOBILIZATION	1	LS
502.219	STR. CONCRETE. ABUTMENTS AND RET. WALLS. CLASS A: (62 CY)	1	LS
503.12	REINFORCING STEEL. FABRICATED AND DELIVERED	3950	LB
503.13	REINFORCING STEEL. PLACING	3950	LB
504.702	STR. STEEL FABRICATED AND DELIVERED. WELDED (141,100 LBS)	1	LS
504.71	STRUCTURAL STEEL ERECTION (141,100 LBS)	1	LS
505.08	SHEAR CONNECTORS (804)	1	LS
506.9102	ZINC RICH COATING SYSTEM (SHOP APPLIED)	1	LS
507.0811	STEEL BRIDGE RAILING. 2 BAR (224 LF)	1	LS
507.0812	STEEL APPROACH RAILING : 2-BAR	4	EA
508.14	HIGH PERFORMANCE WATERPROOFING MEMBRANE (365 SY)	1	LS
510.10	SP. DET. 12 FT. ROADWAY WIDTH VEH. & PED. TRAFFIC SEPARATED	1	LS
511.07	COFFERDAM: No. 1	1	LS
511.07	COFFERDAM: No. 2	1	LS
512.081	FRENCH DRAINS (130 LF)	1	LS
514.06	CURING BOX FOR CONCRETE CYLINDERS	1	EA
515.20	PROTECTIVE COATING FOR CONCRETE SURFACES	140	SY
526.301	TEMPORARY CONCRETE BARRIER - TYPE 1 (120 LF)	1	LS
527.303	ENERGY ABSORBING SYSTEM (ET-PLUS) 37.5 Ft.	1	EA
527.34	WORK ZONE CRASH CUSHIONS	5	UN
534.30	PRECAST STRUCTURAL CONCRETE (99 CY)	1	LS
534.76	PRECAST ABUTMENT (64 CY)	1	LS
534.7601	PRECAST APPROACH SLAB (20 CY)	1	LS
606.1722	BRIDGE TRANSITION - TYPE 2	4	EA
606.23	GUARDRAIL TYPE 3C - SINGLE RAIL	185	LF
606.232	GUARDRAIL TYPE 3C - OVER 15 FOOT RADIUS (30 Ft. Radius)	12.5	LF
606.353	REFLECTORIZED FLEXIBLE GUARDRAIL MARKER	8	EA
606.366	GUARDRAIL. REMOVE & RESET TYPE 3C	90	LF
606.367	REPLACE UNUSABLE EXISTING GUARDRAIL POSTS	10	EA
606.79	GUARDRAIL 350 FLARED TERMINAL	1	EA
610.08	PLAIN RIPRAP	375	CY
610.16	HEAVY RIPRAP	1275	CY
610.18	STONE DITCH PROTECTION	40	CY
613.319	EROSION CONTROL BLANKET	140	SY
615.07	LOAM	85	CY
618.1401	SEEDING METHOD NUMBER 2 - PLAN QUANTITY	14	UN
619.1401	EROSION CONTROL MIX	165	CY
620.58	EROSION CONTROL GEOTEXTILE	2050	SY
627.733	4 INCH WHITE OR YELLOW PAINTED PAVE MRK LINE	1200	LF
629.05	HAND LABOR. STRAIGHT TIME	10	HR
631.12	ALL PURPOSE EXCAVATOR (INCLUDING OPERATOR)	10	HR
631.14	GRADER (INCLUDING OPERATOR)	40	HR
631.15	ROLLER. EARTH AND BASE COURSE (INCLUDING OPERATOR)	10	HR
631.172	TRUCK - LARGE (INCLUDING OPERATOR)	10	HR
631.175	CONTRACTOR TRUCKING	750	T
631.21	ROAD BROOM (INCLUDING OPERATORS AND HAULER)	10	HR
637.071	DUST CONTROL	1	LS
639.18	FIELD OFFICE TYPE A	1	EA
652.312	TYPE III BARRICADE	4	EA
652.33	DRUM	20	EA
652.34	CONE	20	EA
652.35	CONSTRUCTION SIGNS	650	SF
652.36	MAINTENANCE OF TRAFFIC CONTROL DEVICES	30	CD
652.38	FLAGGER	200	HR
656.66	STONE CHECK DAM	5	CY
656.75	TEMPORARY SOIL EROSION AND WATER POLLUTION CONTROL	1	LS
659.10	MOBILIZATION	1	LS

GENERAL CONSTRUCTION NOTES

1. During construction, the road will be closed to traffic for a time period specified in the Special Provisions.

2. For easements, construction limits and right of way lines, refer to Right of Way Map.

3. The clearing limits as shown on the plans are approximate. The exact limits will be established in the field by the Resident. Payment for clearing will be considered incidental to Contract items.

4. All utility facilities shall be adjusted by the respective utilities unless otherwise noted.

5. Do not excavate for Aggregate Subbase Course where existing material is suitable as determined by the Resident.

6. In areas where the Resident directs the Contractor not to excavate to the subgrade line shown on the plans, payment for removing existing pavement, grubbing, shaping, ditching, and compacting the existing subbase and layers of new subbase 6 inches or less thick will be made under appropriate equipment rental items.

7. All embankment material, except as otherwise shown, placed below EL. 321.0 shall be Granular Borrow meeting the requirements of Subsection 703.19, Material for Underwater Backfill.

8. Place Heavy Riprap up to EL. 327±, Plain Riprap up to EL. 338± on sidslopes and up to EL. 331.0 in front of the abutments.

9. Construct Abutment No. 1 shelf at EL. 334.0 and Abutment No. 2 shelf at EL. 334.5.

10. Stones which cannot be rolled or compacted into the surface of the East Blaine Road shall be removed by hand raking. Payment for hand raking will be considered incidental to Item No. 304.10, Aggregate Subbase Course - Gravel.

11. Place loam 2 inches deep on all new or reconstructed sideslopes or as directed by the Resident.

12. Erosion Control Mix may be substituted in those areas normally receiving loam and seed as directed by the Resident. Placement shall be in accordance with Standard Specifications Section 619, Mulch. Payment will be made under Item No. 619.1401, Erosion Control Mix.

13. Place a 24-in. wide strip of Temporary Erosion Control Blanket on the sideslopes along the top of the riprap and behind the wingwalls.

14. An NCHRP350 compliant guardrail end treatment shall be installed concurrently with the placement of each section of beam guardrail.

15. Extended-use Erosion Control Blanket, seeded gutters, riprap downspouts, and other gutters lined with Stone Ditch Protection shall be constructed after paving and shoulder work is completed, where it is apparent that runoff will cause continual erosion. Payment will be made under the appropriate Contract items.

16. Protective Coating for Concrete Surfaces shall be applied to the following areas:

All exposed surfaces of concrete curbs and abutment wingwalls.
Fascias down to the drip notch.
Top of abutment backwalls and to one foot below the top of backwalls on the back side.

17. Project information referred to below may be accessed at the following MaineDOT web address: http://www.maine.gov/mdot/contractors/*projecttbl .

18. The existing bridge plans may be accessed at the MaineDOT web address. The plans are reproductions of the original drawings as prepared for the construction of the bridge. It is very unlikely that the plans will show any construction field changes or any alterations which may have been made to the bridge during its life span.

19. The hydrologic report of the bridge site may be accessed at the MaineDOT web address. The hydrologic report is based on MaineDOT's interpretation of the information obtained for the subject site. No assurance is given that the information or the conclusions of the report will be representative of actual conditions at the time of construction.

20. The project geotechnical report titled: Geotechnical Design Report for the replacement of Boundary Bridge carrying Boundary Line Road over Prestile Stream, Bridgewater, Maine, Soils Report No. 2012-30., Dated January 31, 2013 may be accessed at the MaineDOT web address.

21. Geotechnical information furnished or referred to in this plan set is for the use of the Bidders and the Contractor. No assurance is given that the information or interpretations will be representative of actual subsurface conditions at the construction site. MaineDOT will not be responsible for the Bidders' or Contractor's interpretations of, or conclusions drawn from, the geotechnical information. The boring logs contained in the plan set present factual and interpretive subsurface information collected at discrete locations. Data provided may not be representative of the subsurface conditions between the boring locations.

22. Quantities included for pay items measured and paid for by Lump Sum are estimated quantities and are provided by MaineDOT for informational purposes only. Lump Sum pay items will be paid for at the Contract Bid amount, with no addition or reduction in payment to the Contractor if the actual final quantities are different from the MaineDOT provided estimated quantities, except as follows:

a. If a Lump Sum pay item is eliminated, the requirements of Standard Specifications Section 109.2, Elimination of Items, will take precedence.

b. If other Contract Documents specifically allow a change in payment for a Lump Sum pay item, those requirements will be followed.

c. If a design change results in changes to estimated quantities for Lump Sum pay items, price adjustments will be made in accordance with Standard Specifications Section 109.7, Equitable Adjustments to Compensation.

23. The Contractor shall submit a Bridge Demolition Plan to the Resident at least 10 business days prior to the start of demolition work. The plan shall outline the methods and equipment to be used to remove and dispose of all materials included in the existing bridge. No work related to the removal of the bridge shall be undertaken by the Contractor until MaineDOT has reviewed the Bridge Demolition Plan for appropriateness and completeness. Payment for all work necessary for developing, submitting and finalizing the Demolition Plan will be considered incidental to the bridge removal pay item.

24. Removal of the existing bridge shall include removal of all metal bin walls and concrete slab riprap currently used as slope protection.

25. Existing Plans dated January 11, 1923 show the previous bridge was composed of stone filled log cribs. Remnants of this structure may still be in place in the causeway. Existing plans dated February 1923 states that "fill directly behind abutments and around wings to be made of stone."

26. To minimize slope instability of the expanded embankment, the Contractor shall bench existing fill slope soils in accordance with MaineDOT Standard Specification 203.09, Preparation of Embankment Area, where new fill slope extensions are constructed over existing slopes.

STATE OF MAINE
DEPARTMENT OF TRANSPORTATION

BH-1786(900)X

WIN 17869.00

BRIDGE NO. 3734

BRIDGE PLANS

PROJ. MANAGER	S. BOOGE	BY	DATE
DESIGN-DETAILED	M. WIGHT	D. SHAW	JUN 2011
CHECKED-REVIEWED	M. POULIN		
DESIGN2-DETAILED2			
DESIGN3-DETAILED3			
REVISIONS 1			
REVISIONS 2			
REVISIONS 3			
REVISIONS 4			
FIELD CHANGES			

SIGNATURE

P.E. NUMBER

DATE

BOUNDARY BRIDGE
PRESTILE STREAM
BRIDGEWATER AROOSTOOK COUNTY

ESTIMATED QUANTITIES AND GENERAL CONSTRUCTION NOTES

SHEET NUMBER

2

OF 29

Filename: ...\MSTA\002_Estimate_GCN.dgn Division: BRIDGE Username: david.shaw Date:3/19/2013

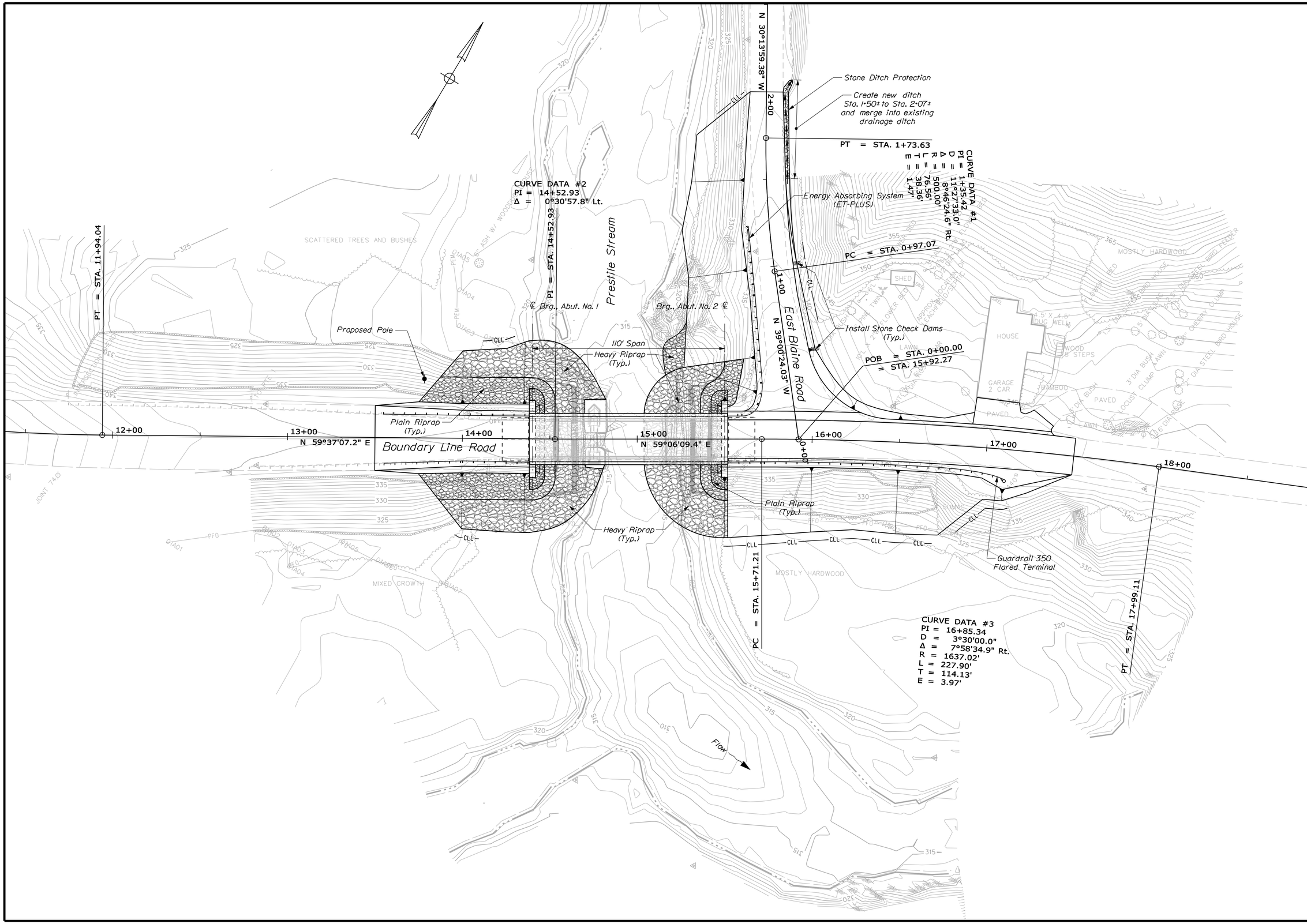

STATE OF MAINE
DEPARTMENT OF TRANSPORTATION

BH-1786(900)X

PIN 17869.00

BRIDGE NO. 3734

BRIDGE PLANS

PROJ. MANAGER	S. BODGE	BY	DATE
DESIGN-DETAILED	M. WIGHT	D. SHAW	JUN 2011
CHECKED-REVIEWED	------	------	------
DESIGN2-DETAILED2	------	------	------
DESIGN3-DETAILED3	------	------	------
REVISIONS 1	------	------	------
REVISIONS 2	------	------	------
REVISIONS 3	------	------	------
REVISIONS 4	------	------	------
FIELD CHANGES	------	------	------

SIGNATURE

P.E. NUMBER

DATE

BOUNDARY BRIDGE
PRESTILE STREAM
BRIDGEWATER AROOSTOOK COUNTY

GENERAL PLAN

SHEET NUMBER

3

OF 29

Filename: ...\msta\003_General_Plan.dgn Division: BRIDGE Username: david.shaw Date:3/13/2013

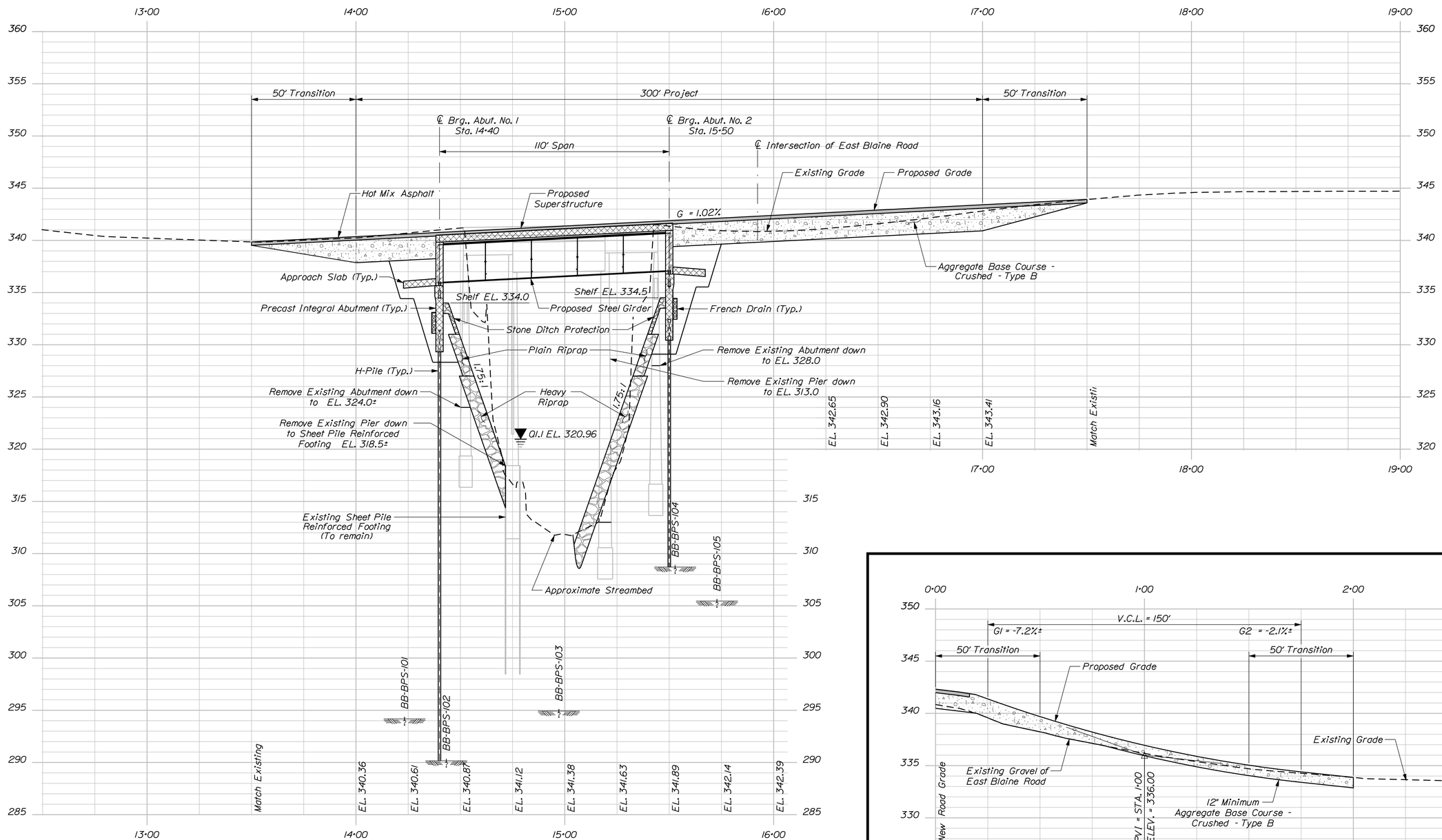

PROFILE

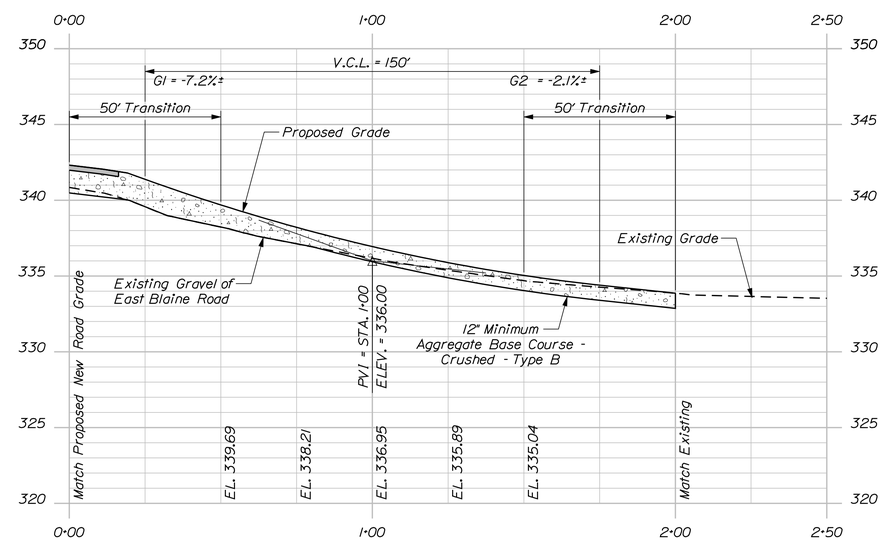

PROFILE
East Blaine Road

STATE OF MAINE
DEPARTMENT OF TRANSPORTATION

BH-1786(900)X

PIN 17869.00

BRIDGE NO. 3734

BRIDGE PLANS

		BY	DATE
PROJ. MANAGER	S. BOOGE		
DESIGN-DETAILED	M. WIGHT	D. SHAW	JUN 2011
CHECKED-REVIEWED			
DESIGN2-DETAILED2			
DESIGN3-DETAILED3			
REVISIONS 1			
REVISIONS 2			
REVISIONS 3			
REVISIONS 4			
FIELD CHANGES			

SIGNATURE

P.E. NUMBER

DATE

BOUNDARY BRIDGE
PRESTILE STREAM
BRIDGEWATER AROOSTOOK COUNTY

PROFILES

SHEET NUMBER

4

OF 29

Filename: ...\00\bridge\msta\004_Profile.dgn Division: BRIDGE Username: david.shaw Date:3/13/2013

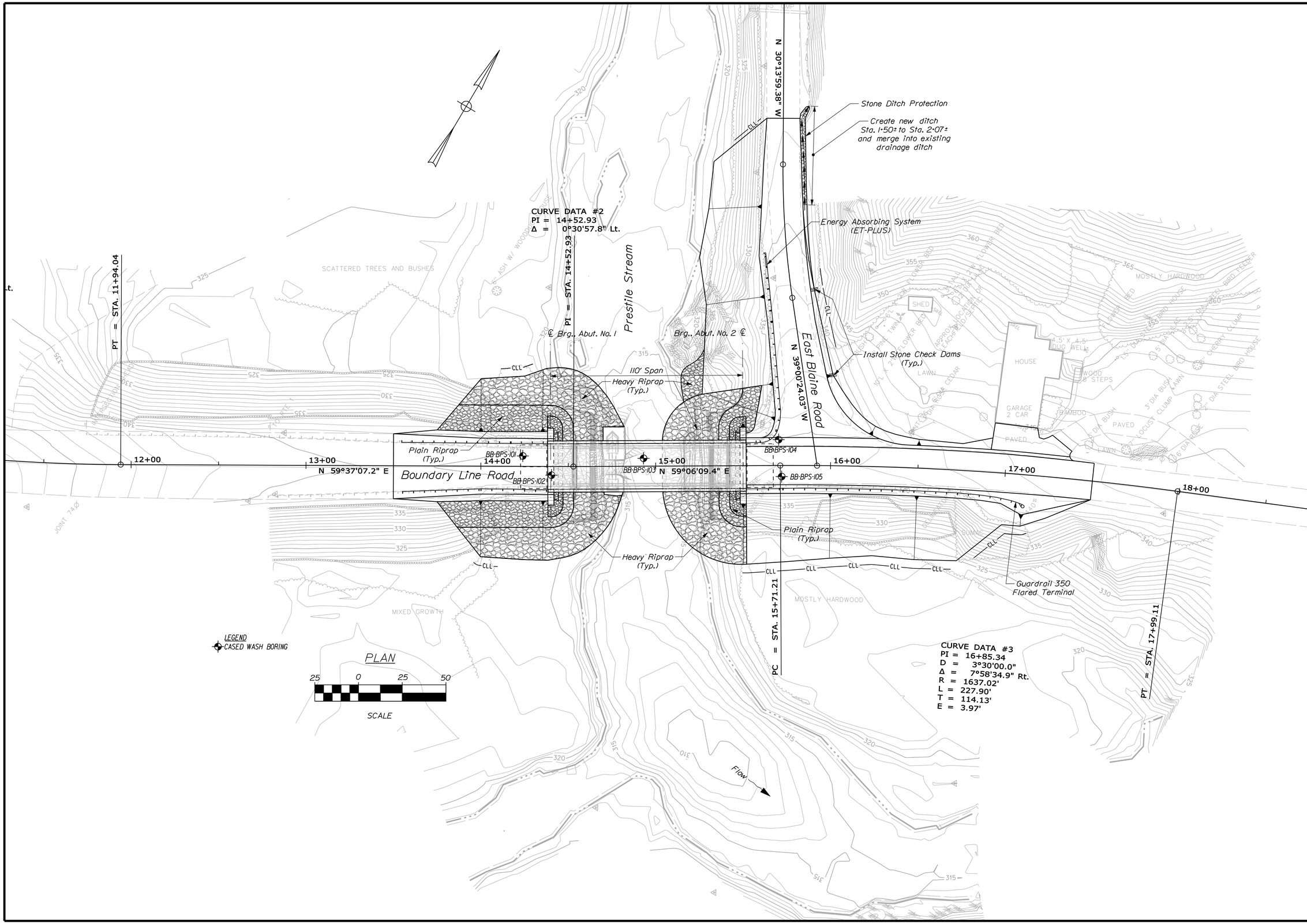

STATE OF MAINE
DEPARTMENT OF TRANSPORTATION

BH-1786(900)X

WIN 17869.00

BRIDGE NO. 3734

BRIDGE PLANS

PROJ. MANAGER	S. Bodge	BY	DATE
DESIGN-DETAILED	M.MOREAU	T. WHITE	JUN 2011
CHECKED-REVIEWED	------	------	------
DESIGN2-DETAILED2	------	------	------
DESIGN3-DETAILED3	------	------	------
REVISIONS 1	------	------	------
REVISIONS 2	------	------	------
REVISIONS 3	------	------	------
REVISIONS 4	------	------	------
FIELD CHANGES	------	------	------

SIGNATURE

P.E. NUMBER

DATE

BOUNDARY BRIDGE
PRESTILE STREAM
BRIDGEWATER AROOSTOOK COUNTY

BORING LOCATION PLAN

SHEET NUMBER

5

OF 29

Filename: ...\00\GEOTECH\MSTA\005_BLP1.dgn Division: BRIDGE Username: david.show Date:3/13/2013

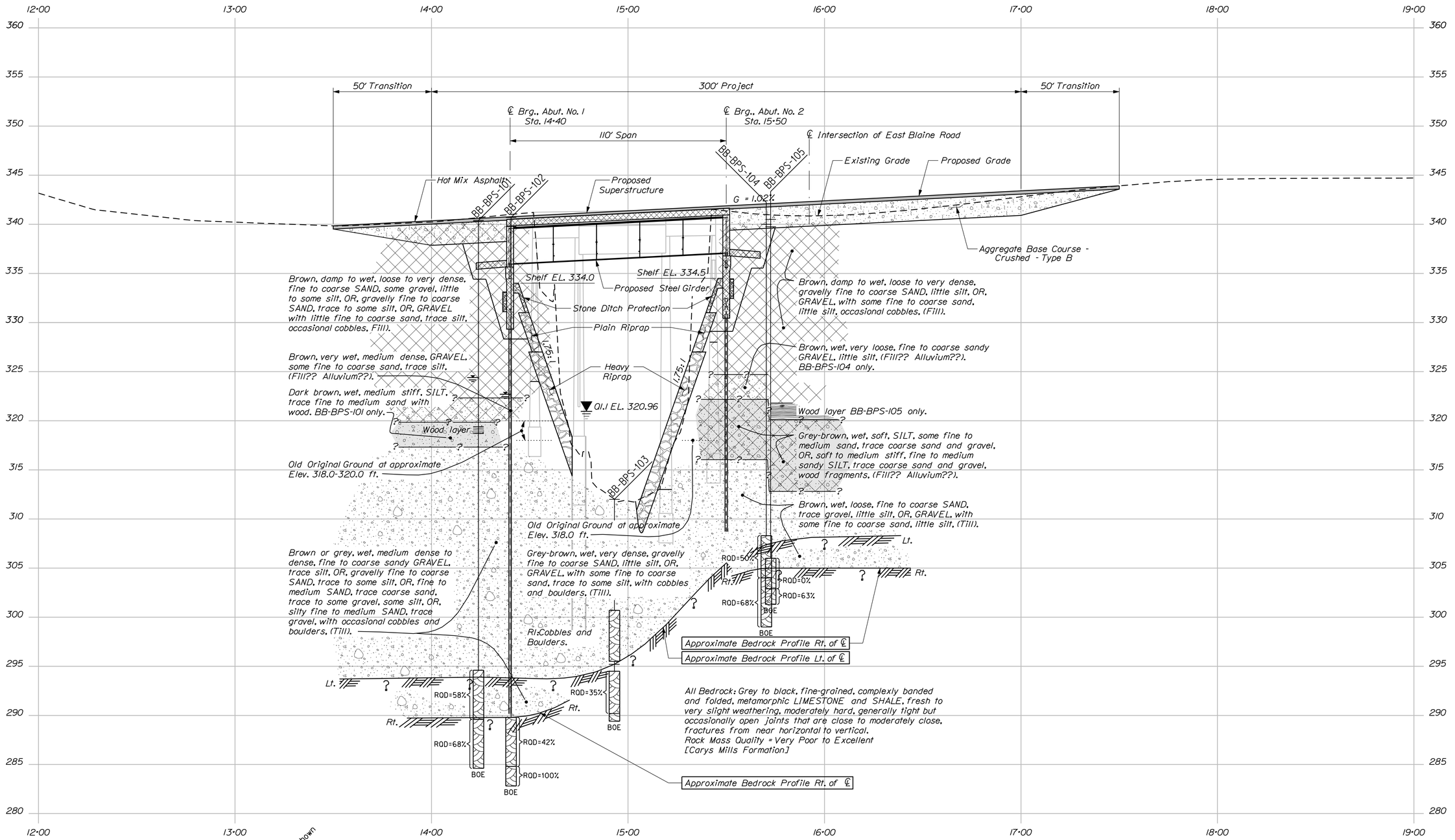

LEGEND

Boring No.
Offset, if shown

Pavement Thickness if applicable

Strata Interface

Groundwater Elevation

Boring

RQD= Rock Quality Designation for Rock Core Sample

BOE= Bottom Of Exploration

Old Original Groud Elev.

PROFILE

HORIZ 25 0 25 50

VERT 5 0 5 10

SCALE

Note: This generalized interpretive soil profile is intended to convey trends in subsurface conditions. The boundaries between strata are approximate and idealized, and have been developed by interpretations of widely spaced explorations and samples. Actual soil transitions may vary and are probably more erratic. For more specific information refer to the exploration logs.

STATE OF MAINE
DEPARTMENT OF TRANSPORTATION

BH-1786(900)X

WIN 17869.00

BRIDGE NO. 3734

BRIDGE PLANS

		BY	DATE
PROJ. MANAGER	S. Bodge		
DESIGN-DETAILED	M.MOREAU	T. WHITE	JAN. 2012
CHECKED-REVIEWED	-----	-----	-----
DESIGN2-DETAILED2	-----	-----	-----
DESIGN3-DETAILED3	-----	-----	-----
REVISIONS 1	-----	-----	-----
REVISIONS 2	-----	-----	-----
REVISIONS 3	-----	-----	-----
REVISIONS 4	-----	-----	-----
FIELD CHANGES	-----	-----	-----

SIGNATURE

P.E. NUMBER

DATE

BOUNDARY BRIDGE
PRESTILE STREAM
BRIDGEWATER AROOSTOOK COUNTY

INTERPRETIVE SUBSURFACE PROFILE

SHEET NUMBER

6

OF 29

Filename: ...\00\GEOTECH\MSTA\006_ISP1.dgn Division: BRIDGE Username: david.show Date:3/13/2013

Filename: ...\MSTA\007_BORING LOGS1.dgn   Division: BRIDGE   Username: david.show   Date:3/13/2013

Maine Department of Transportation

Soil/Rock Exploration Log
US CUSTOMARY UNITS

Project: Boundary Bridge #3734 carries Boundary Line Rd. over Prestile
Location: Bridgewater, Maine

Boring No.: BB-BPS-101
WIN: 17869.00

Driller:	MaineDOT	Elevation (ft.)	340.4	Auger ID/OD:	5" Solid Stem
Operator:	Giguere/Giles/Daggett	Datum:	NAVD88	Sampler:	Standard Split Spoon
Logged By:	B. Wilder	Rig Type:	CME 45C	Hammer Wt./Fall:	140#/30"
Date Start/Finish:	5/23/11-5/24/11	Drilling Method:	Cased Wash Boring	Core Barrel:	NQ-2"
Boring Location:	14+23.9, 5.9 Lt.	Casing ID/OD:	HW & NW	Water Level*:	16.0 ft bgs.
Hammer Efficiency Factor: 0.84		Hammer Type:	Automatic ☒ Hydraulic ☐ Rope & Cathead ☐		

Definitions:
D = Split Spoon Sample
MD = Unsuccessful Split Spoon Sample attempt
U = Thin Wall Tube Sample
MU = Unsuccessful Thin Wall Tube Sample attempt
V = Insitu Vane Shear Test, PP = Pocket Penetrometer
MV = Unsuccessful Insitu Vane Shear Test attempt
R = Rock Core Sample
SSA = Solid Stem Auger
HSA = Hollow Stem Auger
RC = Roller Cone
WOH = weight of 140lb. hammer
WOR/C = weight of rods or casing
WO1P = Weight of one person
S_u = Insitu Field Vane Shear Strength (psf)
T_v = Pocket Torvane Shear Strength (psf)
q_p = Unconfined Compressive Strength (ksf)
N-uncorrected = Raw field SPT N-value
Hammer Efficiency Factor = Annual Calibration Value
N_{60} = SPT N-uncorrected corrected for hammer efficiency
N_{60} = (Hammer Efficiency Factor/60%)*N-uncorrected
$S_{u(lab)}$ = Lab Vane Shear Strength (psf)
WC = water content, percent
LL = Liquid Limit
PL = Plastic Limit
PI = Plasticity Index
G = Grain Size Analysis
C = Consolidation Test

Depth (ft.)	Sample No.	Pen./Rec. (in.)	Sample Depth (ft.)	Blows (/6 in.) Shear Strength (psf) or RQD (%)	N-uncorrected	N_{60}	Casing Blows
0							SSA
1	1D	24/18	1.00 - 3.00	23/25/24/22	49	69	
5	2D	24/10	5.00 - 7.00	3/5/4/15	9	13	
10	[a]3D	24/6	10.00 - 12.00	6/7/11/9	18	25	45
11							49
12							54
13							42
14							47
15	[a]4D	24/8	15.00 - 17.00	14/11/4/4	15	21	47
16							28
17							54
18							60
19							48
20	5D	24/12	20.00 - 22.00	2/1/3/3	4	6	21
21							45
22							21
23							53
24							101
25	6D	24/14	25.00 - 27.00	45/23/10/19	33	46	79
26							131
27							112
28							122
29							104
30	7D	24/8	30.00 - 32.00	12/8/5/8	13	18	55
31							56
32							78
33							75
34							83
35	8D	24/16	35.50 - 37.50	12/12/11/12	23	32	114
36							96
37							109
38							109
39							130
40	9D	24/20	40.00 - 42.00	13/26/24/26	50	70	47
41							97
42							100
43							150
44							165
45	10D R1	9.6/9.6 60/60	45.00 - 45.80 45.80 - 50.80	25/50(3.6") RQD = 58%	---		[b]172 NQ-2
50	R2	60/60	50.80 - 55.80	RQD = 68%			

Visual Description and Remarks (Elevation (ft.) / Depth) — Laboratory Testing Results/AASHTO and Unified Class:

- 340.30 — 1.2" PAVEMENT. — 0.10
- Brown, damp, very dense, well graded, fine to coarse SAND, some gravel, little silt, old pavement, (Fill). — G#244994, A-1-b, SM, WC=5.4%
- 336.40 — 4.00
- Brown, damp, medium dense, gravelly, fine to coarse SAND, some silt, (Fill).
- Cobble from 7.5-8.2 ft bgs.
- 332.20 — 8.20
- Brown, damp, medium dense, GRAVEL, little fine to coarse sand, trace silt, (Fill). [a]3D and [a]4D combined for sieve analysis test. — G#244995, A-1-a, GP-GM, WC=10.6%
- Similar to above. [a]3D and [a]4D combined for sieve analysis test. — G#244995, A-1-a, GP-GM, WC=10.6%
- Old original ground at approximate Elev. 320 feet.
- 319.90 — 20.50
- Dark brown, wet, medium stiff, SILT, trace fine to medium sand with wood. (Alluvium) Wood layer from 21.0-21.7 ft bgs.
- 317.40 — 23.00
- Brown, wet, dense, fine to coarse sandy GRAVEL, trace silt, (Till). — G#244996, A-1-a, GW-GM, WC=17.7%
- 311.40 — 29.00
- Grey, wet, medium dense, gravelly, fine to coarse SAND, trace silt, (Till).
- 306.40 — 34.00
- Grey, wet, dense, fine to medium SAND, trace coarse sand, trace gravel some silt, (Till). — G#244997, A-2-4, SM, WC=18.4%
- Grey, wet, very dense, fine to medium SAND, some gravel, some silt, (Till). Changed to NW Casing at 40.0 ft bgs.
- Roller Coned ahead from 43.0-45.0 ft bgs.
- [b]172 blows for 0.8'. Similar to above. R1:Core Times (min:sec) 45.8-46.8 ft (2:50)
- 293.90 — 46.50
- Top of Bedrock at Elev. 293.9 ft.
- R1 and R2 Bedrock: Grey to black, fine-grained, complexly banded and folded, metamorphic LIMESTONE and SHALE, fresh to very slight weathering, moderately hard, generally tight but occasionally open joints that are close to moderately close, fractures from near horizontal to vertical, no in-filling, Rock Mass Quality is Fair. [Carys Mills Formation]
- R1 Core Time Con't. (min:sec) 46.8-47.8 ft (3:10) 47.8-48.8 ft (3:10) 48.8-49.8 ft (2:40) 49.8-50.8 ft (4:55) 100% Recovery
- R2:Core Times (min:sec) 50.8-51.8 ft (2:00) 51.8-52.8 ft (3:00) 52.8-53.8 ft (2:50) 53.8-54.8 ft (3:20) 54.8-55.8 ft (3:45) 100% Recovery
- 284.60 — 55.80
- Bottom of Exploration at 55.80 feet below ground surface.

Remarks:

Stratification lines represent approximate boundaries between soil types; transitions may be gradual.

* Water level readings have been made at times and under conditions stated. Groundwater fluctuations may occur due to conditions other than those present at the time measurements were made.

Page 1 of 1

Boring No.: BB-BPS-101

Maine Department of Transportation

Soil/Rock Exploration Log
US CUSTOMARY UNITS

Project: Boundary Bridge #3734 carries Boundary Line Rd. over Prestile
Location: Bridgewater, Maine

Boring No.: BB-BPS-103
WIN: 17869.00

Driller:	MaineDOT	Elevation (ft.)	312.0	Auger ID/OD:	N/A
Operator:	Giguere/Giles/Daggett	Datum:	NAVD88	Sampler:	Standard Split Spoon
Logged By:	B. Wilder	Rig Type:	CME 45C	Hammer Wt./Fall:	140#/30"
Date Start/Finish:	5/31/11-6/1/11	Drilling Method:	Cased Wash Boring	Core Barrel:	NQ-2"
Boring Location:	14+93.1, 4.5 Lt.	Casing ID/OD:	HW & NW	Water Level*:	River Boring
Hammer Efficiency Factor: 0.84		Hammer Type:	Automatic ☒ Hydraulic ☐ Rope & Cathead ☐		

Definitions:
D = Split Spoon Sample
MD = Unsuccessful Split Spoon Sample attempt
U = Thin Wall Tube Sample
MU = Unsuccessful Thin Wall Tube Sample attempt
V = Insitu Vane Shear Test, PP = Pocket Penetrometer
MV = Unsuccessful Insitu Vane Shear Test attempt
R = Rock Core Sample
SSA = Solid Stem Auger
HSA = Hollow Stem Auger
RC = Roller Cone
WOH = weight of 140lb. hammer
WOR/C = weight of rods or casing
WO1P = Weight of one person
S_u = Insitu Field Vane Shear Strength (psf)
T_v = Pocket Torvane Shear Strength (psf)
q_p = Unconfined Compressive Strength (ksf)
N-uncorrected = Raw field SPT N-value
Hammer Efficiency Factor = Annual Calibration Value
N_{60} = SPT N-uncorrected corrected for hammer efficiency
N_{60} = (Hammer Efficiency Factor/60%)*N-uncorrected
$S_{u(lab)}$ = Lab Vane Shear Strength (psf)
WC = water content, percent
LL = Liquid Limit
PL = Plastic Limit
PI = Plasticity Index
G = Grain Size Analysis
C = Consolidation Test

Depth (ft.)	Sample No.	Pen./Rec. (in.)	Sample Depth (ft.)	Blows (/6 in.) Shear Strength (psf) or RQD (%)	N-uncorrected	N_{60}	Casing Blows
0	1D	4.8/3	0.00 - 0.40	50(4.8")	---		15
1							21
2							15
3							34
4							36
5	2D	13.2/5	5.00 - 6.10	11/23/25(1.2")	---		44
6							55
7							72
8							88
9							90
10	3D	20.4/16	10.00 - 11.70	33/33/48/40(2.4)	81	113	25
11	R1		11.30 - 16.50	RQD = N/A%			51 NQ-2
12							80
13							120
14							174
15							83
16							89
17	R2	51.6/51.6	17.50 - 21.80	RQD = 35%			[a]30 NQ-2
21	R3	9.6/0	21.80 - 22.60				

Visual Description and Remarks (Elevation (ft.) / Depth) — Laboratory Testing Results/AASHTO and Unified Class:

- Grey-brown, wet, very dense, gravelly, fine to coarse SAND, little silt, (Till). Roller Coned ahead to 5.0 ft bgs. — G#244973, A-1-a, SW-SM, WC=13.6%
- 309.00 — 3.00
- Grey, wet, very dense, GRAVEL, some fine to coarse sand, trace silt, (Till). — G#244974, A-1-a, SW, WC=10.2%
- 303.00 — 9.00
- Brown, wet, very dense, GRAVEL, some fine to coarse sand, some silt, (Till). — G#244975, A-1-b, GM, WC=9.2%
- Roller Coned ahead to 11.7 ft bgs. R1:Cobbles and Boulder. R1:Core Times (min:sec) 11.3-12.3 ft (1:45) 12.3-13.3 ft (1:00) 13.3-14.3 ft (3:10) 14.3-15.3 ft (2:35) 15.3-16.3 ft (3:40) 16.3-16.5 ft (2:12)
- Roller Coned ahead from 16.5-17.5 ft bgs.
- 295.20 — 16.80
- [a]30 blows for 0.5'.
- Top of Bedrock at Elev. 295.2 ft.
- R2 and R3 Bedrock: Grey to black, fine-grained, complexly banded and folded, metamorphic LIMESTONE and SHALE, fresh to very slight weathering, moderately hard, generally tight but occasionally open joints that are very close to close, fractures from near horizontal to vertical, no in-filling, Rock Mass Quality is Poor. [Carys Mills Formation]
- R2:Core Times (min:sec) 17.5-18.5 ft (6:50) 18.5-19.5 ft (6:21) 19.5-20.5 ft (3:35) 20.5-21.5 ft (3:50) 21.5-21.8 ft (2:11) 100% Recovery Core Blocked
- R3: 21.8-22.6 ft Core Blocked, ground into bedrock. 0% Recovery
- 289.40 — 22.60
- Bottom of Exploration at 22.60 feet below ground surface.

Remarks:

Bridge Deck to Ground 30.4 ft.
Bridge Deck: 4.8" Pavement, 1.1 ft Gravel, 1.7 ft Concrete.

Stratification lines represent approximate boundaries between soil types; transitions may be gradual.

* Water level readings have been made at times and under conditions stated. Groundwater fluctuations may occur due to conditions other than those present at the time measurements were made.

Page 1 of 1

Boring No.: BB-BPS-103

Maine Department of Transportation

Soil/Rock Exploration Log
US CUSTOMARY UNITS

Project: Boundary Bridge #3734 carries Boundary Line Rd. over Prestile
Location: Bridgewater, Maine

Boring No.: BB-BPS-104
WIN: 17869.00

Driller:	MaineDOT	Elevation (ft.)	340.0	Auger ID/OD:	5" Solid Stem
Operator:	Giguere/Giles/Daggett	Datum:	NAVD88	Sampler:	Standard Split Spoon
Logged By:	B. Wilder	Rig Type:	CME 45C	Hammer Wt./Fall:	140#/30"
Date Start/Finish:	5/25/11-5/26/11	Drilling Method:	Cased Wash Boring	Core Barrel:	NQ-2"
Boring Location:	15+70.4, 14.8 Lt.	Casing ID/OD:	HW & NW	Water Level*:	None Observed
Hammer Efficiency Factor: 0.84		Hammer Type:	Automatic ☒ Hydraulic ☐ Rope & Cathead ☐		

Definitions:
D = Split Spoon Sample
MD = Unsuccessful Split Spoon Sample attempt
U = Thin Wall Tube Sample
MU = Unsuccessful Thin Wall Tube Sample attempt
V = Insitu Vane Shear Test, PP = Pocket Penetrometer
MV = Unsuccessful Insitu Vane Shear Test attempt
R = Rock Core Sample
SSA = Solid Stem Auger
HSA = Hollow Stem Auger
RC = Roller Cone
WOH = weight of 140lb. hammer
WOR/C = weight of rods or casing
WO1P = Weight of one person
S_u = Insitu Field Vane Shear Strength (psf)
T_v = Pocket Torvane Shear Strength (psf)
q_p = Unconfined Compressive Strength (ksf)
N-uncorrected = Raw field SPT N-value
Hammer Efficiency Factor = Annual Calibration Value
N_{60} = SPT N-uncorrected corrected for hammer efficiency
N_{60} = (Hammer Efficiency Factor/60%)*N-uncorrected
$S_{u(lab)}$ = Lab Vane Shear Strength (psf)
WC = water content, percent
LL = Liquid Limit
PL = Plastic Limit
PI = Plasticity Index
G = Grain Size Analysis
C = Consolidation Test

Depth (ft.)	Sample No.	Pen./Rec. (in.)	Sample Depth (ft.)	Blows (/6 in.) Shear Strength (psf) or RQD (%)	N-uncorrected	N_{60}	Casing Blows
0	1D	24/18	0.00 - 2.00	16/31/20/19	51	71	SSA
5	2D	24/16	5.00 - 7.00	12/14/14/13	28	39	
10							[a]11
11	MD	24/1	11.00 - 13.00	4/6/9/11	15	21	30
12							37
13							48
14							63
15	3D	24/10	15.50 - 17.50	3/1/2/1	3	4	18
16							18
17							12
18							11
19							11
20	4D	24/17	20.00 - 22.00	1/1/2/2	3	4	19
21							27
22							31
23							36
24							44
25	5D	24/9	25.00 - 27.00	7/4/3/3	7	10	51
26							56
27							65
28							46
29							66
30	6D	14.4/10	30.00 - 31.20	18/40/50(2.4')	---		75
31	R1	51.6/51.6	31.70 - 36.00	RQD = 50%			[b]100 NQ-2
36	R2	60/60	36.00 - 41.00	RQD = 68%			

Visual Description and Remarks (Elevation (ft.) / Depth) — Laboratory Testing Results/AASHTO and Unified Class:

- Brown, damp, very dense, GRAVEL, some fine to coarse sand, little silt, old pavement, (Fill).
- Similar to above, except no pavement and dense. — G#245319, A-1-a, GW-GM, WC=3.7
- Auger through Cobble from 10.0-10.7 ft bgs. [a]11 blows for 0.3 ft.
- Similar to 2D but medium dense.
- 324.50 — 15.50
- Brown, wet, very loose, fine to coarse sandy GRAVEL, little silt, (Fill? Alluvium?). — G#245320, A-1-b, GM, WC=31.8%
- 322.00 — 18.00
- Grey-brown, wet, soft, SILT, some fine to medium sand, trace coarse sand and gravel, wood fragments, (Fill? Alluvium?). — G#245321, A-4, ML, WC=39.7%
- Old original ground at approximate Elev. 318 feet.
- 316.00 — 24.00
- Brown, very wet, loose, GRAVEL, some fine to coarse sand, little silt, (Till) . — G#245322, A-1-a, GW-GM, WC=17.6%
- Similar to above, except very dense. Changed to NW Casing at 30.0 ft bgs.
- [b]100 blows for 0.7 ft.
- R1:Core Times (min:sec) 31.7-32.7 ft (2:40)
- 307.40 — 32.60
- Top of Bedrock at Elev. 307.4 ft.
- R1and R2 Bedrock: Grey to black, fine-grained, complexly banded and folded, metamorphic LIMESTONE and SHALE, fresh to very slight weathering, moderately hard, generally tight but occasionally open joints that are very close to moderately close, fractures from near horizontal to vertical, no in-filling, calcite seams at 36.7' to 36.8' and 38.6' to 38.8' bgs. Rock Mass Quality is Poor to Fair. [Carys Mills Formation]
- R1 Core Times Con't (min:sec) 32.7-33.7 ft (3:21) 33.7-34.7 ft (2:34) 34.7-35.7 ft (4:29) 35.7-36.0 ft (3:00) 100% Recovery
- R2:Core Times (min:sec) 36.0-37.0 ft (3:12) 37.0-38.0 ft (5:00) 38.0-39.0 ft (2:30) 39.0-40.0 ft (2:40) 40.0-41.0 ft (2:51) 100% Recovery
- 299.00 — 41.00
- Bottom of Exploration at 41.00 feet below ground surface.

Remarks:

Stratification lines represent approximate boundaries between soil types; transitions may be gradual.

* Water level readings have been made at times and under conditions stated. Groundwater fluctuations may occur due to conditions other than those present at the time measurements were made.

Page 1 of 1

Boring No.: BB-BPS-104

STATE OF MAINE
DEPARTMENT OF TRANSPORTATION

BH-1786(900)X

BRIDGE NO. 3734

WIN 17869.00

BRIDGE PLANS

	BY	DATE
PROJ. MANAGER	S. Bodge	
DESIGN-DETAILED	M.MOREAU	JAN 2012
CHECKED-REVIEWED	T.WHITE	
DESIGN2-DETAILED2		
DESIGN3-DETAILED3		
REVISIONS 1		
REVISIONS 2		
REVISIONS 3		
REVISIONS 4		
FIELD CHANGES		

SIGNATURE

P.E. NUMBER

DATE

BOUNDARY BRIDGE
PRESTILE STREAM
BRIDGEWATER AROOSTOOK COUNTY

BORING LOGS
LT. OF ℄

SHEET NUMBER
7
OF 29

Maine Department of Transportation

Soil/Rock Exploration Log
US CUSTOMARY UNITS

Project: Boundary Bridge #3734 carries Boundary Line Rd. over Prestile
Location: Bridgewater, Maine

Boring No.: BB-BPS-102
WIN: 17869.00

Driller:	MaineDOT	Elevation (ft.)	340.7	Auger ID/OD:	5" Solid Stem
Operator:	Giguere/Gilles/Doggett	Datum:	NAVD88	Sampler:	Standard Split Spoon
Logged By:	B. Wilder	Rig Type:	CME 45C	Hammer Wt./Fall:	140#/30"
Date Start/Finish:	6/1/11-6/2/11	Drilling Method:	Cased Wash Boring	Core Barrel:	NQ-2"
Boring Location:	14+40.5, 5.0 Rt.	Casing ID/OD:	HW & NW	Water Level*:	18.0 ft bgs.

Hammer Efficiency Factor: 0.84 — Hammer Type: Automatic ☒ Hydraulic ☐ Rope & Cathead ☐

Definitions:
D = Split Spoon Sample
MD = Unsuccessful Split Spoon Sample attempt
U = Thin Wall Tube Sample
MU = Unsuccessful Thin Wall Tube Sample attempt
V = Insitu Vane Shear Test, PP = Pocket Penetrometer
MV = Unsuccessful Insitu Vane Shear Test attempt
R = Rock Core Sample
SSA = Solid Stem Auger
HSA = Hollow Stem Auger
RC = Roller Cone
WOH = weight of HOIs, hammer
WOR/C = weight of rods or casing
WO1P = Weight of one person
S_u = Insitu Field Vane Shear Strength (psf)
T_v = Pocket Torvane Shear Strength (psf)
q_p = Unconfined Compressive Strength (ksf)
N-uncorrected = Raw field SPT N-value
Hammer Efficiency Factor = Annual Calibration Value
N_{60} = SPT N-uncorrected corrected for hammer efficiency
N_{60} = (Hammer Efficiency Factor/60%)*N-uncorrected
$S_{u(lab)}$ = Lab Vane Shear Strength (psf)
WC = water content, percent
LL = Liquid Limit
PL = Plastic Limit
PI = Plasticity Index
G = Grain Size Analysis
C = Consolidation Test

Sample Information

Depth (ft.)	Sample No.	Pen./Rec. (in.)	Sample Depth (ft.)	Blows (/6 in.) Shear Strength (psf) Qp (ksf) (*)	N-uncorrected	N_{60}	Casing Blows	Elevation (ft.)	Visual Description and Remarks	Laboratory Testing Results/ AASHTO and Unified Class
0							SSA	339.78	11" PAVEMENT. (0.92)	
	10	24/16	1.00 - 3.00	8/7/5/4	12	17			Brown, damp, medium dense, fine to coarse SAND, some gravel, little silt. (Fill).	GM24998 A-1-b, SM WC=6.5%
5	20	24/13	5.00 - 7.00	3/3/3/3	6	8			Similar to above, except loose.	
								331.70	(9.00)	
10	30	24/4	10.00 - 12.00	5/5/7/3	12	17	28		Brown, wet, medium dense, gravelly, medium to coarse SAND, trace fine sand and silt. (Fill).	
							16			
							40			
							46			
							82			
15	40	24/5	15.00 - 17.00	7/9/9/9	18	25	39		Similar to above.	
							87			
							62			
							49	322.70	(18.00)	
20	50	24/14	20.00 - 22.00	4/4/13/17	17	24	61		Brown, very wet, medium dense, GRAVEL, some fine to coarse sand, trace silt. (Fill? Alluvium?)	GM24999 A-1-b, GW-GM WC=15.0%
							21			
							52			
							67			
							42		Old original ground at approximate Elev. 318 feet.	
							95	316.70	(24.00)	
25	60	24/12	25.00 - 27.00	33/21/15/20	36	50	85		Grey-brown, wet, dense, gravelly, fine to coarse SAND, little to some silt. (Till).	
							112			
							142			
							126			
							102	310.70	(30.00)	
30	MD	6/0	30.00 - 30.50	60	---		SPLIT AUGER		Failed sample attempt. Changed to NW Casing at 30.0 ft bgs. Roller Coned ahead to 31.5 ft bgs. Boulder 30.5-31.4 ft bgs.	
	70	24/13	32.00 - 34.00	13/7/7/11	14	20			Brown, wet, medium dense, gravelly, fine to coarse sand, little silt, occasional cobbles and boulders. (Till). Roller Coned ahead to 34.0 ft bgs.	GM245000 A-1-b, SM WC=15.0%
	80	24/14	34.00 - 36.00	9/8/12/32	20	28			Similar to above.	
								303.70	(37.00)	
35										
	90	24/19	39.00 - 41.00	10/14/15/22	29	41			Grey, wet, dense, silty fine to medium SAND, trace gravel. (Till). Roller Coned ahead to 48.0 ft bgs.	GM24971 A-4, SM WC=18.7%
								297.70	(43.00)	
40									Cobbles from 43.0-48.0 ft bgs.	
	100	12/10	48.00 - 49.00	39/50	---				Grey, wet, very dense, gravelly, fine to coarse SAND, little silt, cobbles and boulders. (Till).	GM24972 A-1-b, SM WC=8.6%
45										
50	R1	60/60	50.90 - 55.90	RQD = 42%			NQ-2	289.80	(50.90)	
									Top of Bedrock at Elev. 289.8 ft. R1 and R2 Bedrock: Grey to black, fine-grained, complexly banded and folded, metamorphic LIMESTONE and SHALE, fresh to very slight weathering, moderately hard, generally tight but occasionally open joints that are very close to close, fractures from near horizontal to vertical, no in-filling, calcite vein between 55.5' and 55.7' bgs. Rock Mass Quality is Poor to Excellent. [Carys Mills Formation] R1:Core Times (min:sec) 50.9-51.9 ft (2:45) 51.9-52.9 ft (2:50) 52.9-53.9 ft (3:15) 53.9-54.9 ft (3:20) 54.9-55.9 ft (3:20) 100% Recovery R2:Core Times (min:sec) 55.9-56.9 ft (3:50) 56.9-57.9 ft (6:10) 92% Recovery	
55	R2	24/22	55.90 - 57.90	RQD = 92%						
								282.80	(57.90)	
60									Bottom of Exploration at 57.90 feet below ground surface.	
65										
70										
75										

Remarks:

Stratification lines represent approximate boundaries between soil types; transitions may be gradual.

* Water level readings have been made at times and under conditions stated. Groundwater fluctuations may occur due to conditions other than those present at the time measurements were made.

Page 1 of 1 — Boring No.: BB-BPS-102

Maine Department of Transportation

Soil/Rock Exploration Log
US CUSTOMARY UNITS

Project: Boundary Bridge #3734 carries Boundary Line Rd. over Prestile
Location: Bridgewater, Maine

Boring No.: BB-BPS-105
WIN: 17869.00

Driller:	MaineDOT	Elevation (ft.)	340.5	Auger ID/OD:	5" Solid Stem
Operator:	Giguere/Gilles/Doggett	Datum:	NAVD88	Sampler:	Standard Split Spoon
Logged By:	B. Wilder	Rig Type:	CME 45C	Hammer Wt./Fall:	140#/30"
Date Start/Finish:	5/24/11-5/25/11	Drilling Method:	Cased Wash Boring	Core Barrel:	NQ-2"
Boring Location:	15+72, 6.3 Rt.	Casing ID/OD:	HW & NW	Water Level*:	None Observed

Hammer Efficiency Factor: 0.84 — Hammer Type: Automatic ☒ Hydraulic ☐ Rope & Cathead ☐

Definitions:
D = Split Spoon Sample
MD = Unsuccessful Split Spoon Sample attempt
U = Thin Wall Tube Sample
MU = Unsuccessful Thin Wall Tube Sample attempt
V = Insitu Vane Shear Test, PP = Pocket Penetrometer
MV = Unsuccessful Insitu Vane Shear Test attempt
R = Rock Core Sample
SSA = Solid Stem Auger
HSA = Hollow Stem Auger
RC = Roller Cone
WOH = weight of HOIs, hammer
WOR/C = weight of rods or casing
WO1P = Weight of one person
S_u = Insitu Field Vane Shear Strength (psf)
T_v = Pocket Torvane Shear Strength (psf)
q_p = Unconfined Compressive Strength (ksf)
N-uncorrected = Raw field SPT N-value
Hammer Efficiency Factor = Annual Calibration Value
N_{60} = SPT N-uncorrected corrected for hammer efficiency
N_{60} = (Hammer Efficiency Factor/60%)*N-uncorrected
$S_{u(lab)}$ = Lab Vane Shear Strength (psf)
WC = water content, percent
LL = Liquid Limit
PL = Plastic Limit
PI = Plasticity Index
G = Grain Size Analysis
C = Consolidation Test

Sample Information

Depth (ft.)	Sample No.	Pen./Rec. (in.)	Sample Depth (ft.)	Blows (/6 in.) Shear Strength (psf) Qp (ksf) (*)	N-uncorrected	N_{60}	Casing Blows	Elevation (ft.)	Visual Description and Remarks	Laboratory Testing Results/ AASHTO and Unified Class
0							SSA	339.75	9" PAVEMENT. (0.75)	
	10	24/17	1.00 - 3.00	10/12/11/10	23	32			Brown, damp, dense to medium dense, gravelly, fine to coarse SAND, little silt. (Fill).	GM245323 A-1-b, SM WC=5.6%
5	20	24/8	5.00 - 7.00	4/10/8/12	18	25			Similar to above.	
10	30	24/14	10.50 - 12.50	4/7/4/9	11	15	6"O	330.00	Augered through cobble from 10.0-10.4 ft bgs. 6"O blows for 0.5 ft. (10.50)	
							18		Brown, very wet, medium dense, gravelly, fine to coarse SAND, little silt. (Fill).	
							45			
							47			
							80			
15	40	24/1	15.00 - 17.00	5/4/3/2	7	10	36		Similar to above but loose.	
							37			
							29			
							80		Wood layer from 18.7-20.4 ft bgs.	
							29			
20	50	24/11	20.00 - 22.00	WOH/WOH/3/3	3	4	24	320.10	Grey, wet, soft, fine to medium sandy SILT, trace coarse sand and gravel, with wood. (Fill? Alluvium?). (20.40)	GM245324 A-4, ML WC=33.4%
							29			
							34		Old original ground at approximate Elev. 318 feet.	
							44			
							47			
25	60	24/10	25.00 - 27.00	WOH/3/3/3	6	8	56		Grey, wet, medium stiff, fine to medium sandy SILT, trace coarse sand and gravel, with wood. (Fill? Alluvium?).	GM245325 A-4, ML WC=32.3%
							57			
							96	313.00	(27.50)	
							89			
							77			
30	70	24/15	30.00 - 32.00	5/5/2/2	7	10	52		Brown, wet, loose, fine to coarse SAND, trace gravel, little silt. (Till). Changed to NW Casing at 30.0 ft bgs.	GM261726 A-1-b, SM WC=18.3%
							47			
							66			
							75			
	R1	37.2/ 37.2	34.50 - 37.60	RQD = 0%			9:100 NQ-2		R100 blows for 0.5 ft. R1:Core Times (min:sec) 34.5-35.5 ft (7:25)	
35								305.00	(35.50)	
									Top of Bedrock at Elev. 305.0 ft. R1 and R2 Bedrock: Grey to black, fine-grained, complexly banded and folded, metamorphic LIMESTONE and SHALE, fresh to very slight weathering, moderately hard, generally tight but occasionally open joints that are very close to close, fractures from near horizontal to vertical, no in-filling. Rock Mass Quality is Very Poor to Fair. [Carys Mills Formation] R1 Core Times Can't (min:sec) 35.5-36.5 ft (4:10) 36.5-37.5 ft (7:00) 37.5-37.6 ft (5:00) 100% Recovery Core Blocked R2:Core Times (min:sec) 37.6-38.6 ft (6:15) 38.6-39.2 ft (8:00) 100% Recovery Core Blocked, could not get Core Barrel back down.	
	R2	19.2/ 19.2	37.60 - 39.20	RQD = 63%				301.30	(39.20)	
40									Bottom of Exploration at 39.20 feet below ground surface.	
45										
50										

Remarks:

Stratification lines represent approximate boundaries between soil types; transitions may be gradual.

* Water level readings have been made at times and under conditions stated. Groundwater fluctuations may occur due to conditions other than those present at the time measurements were made.

Page 1 of 1 — Boring No.: BB-BPS-105

STATE OF MAINE
DEPARTMENT OF TRANSPORTATION

BH-1786(900)X

WIN 17869.00

BRIDGE NO. 3734

BRIDGE PLANS

PROJ. MANAGER	S. Budge	BY	DATE
DESIGN-DETAILED	M.MOREAU	T.WHITE	JAN 2012
CHECKED-REVIEWED	-----	-----	SIGNATURE
DESIGN2-DETAILED2	-----	-----	P.E. NUMBER
DESIGN3-DETAILED3	-----	-----	DATE
REVISIONS 1	-----	-----	-----
REVISIONS 2	-----	-----	-----
REVISIONS 3	-----	-----	-----
REVISIONS 4	-----	-----	-----
FIELD CHANGES	-----	-----	-----

BOUNDARY BRIDGE
PRESTILE STREAM
BRIDGEWATER AROOSTOOK COUNTY

BORING LOGS
RT. OF ℄

SHEET NUMBER
8
OF 29

Filename: ...\MSTA\008_BORING LOGS2.dgn Division: BRIDGE Username: david.show Date:3/13/2013

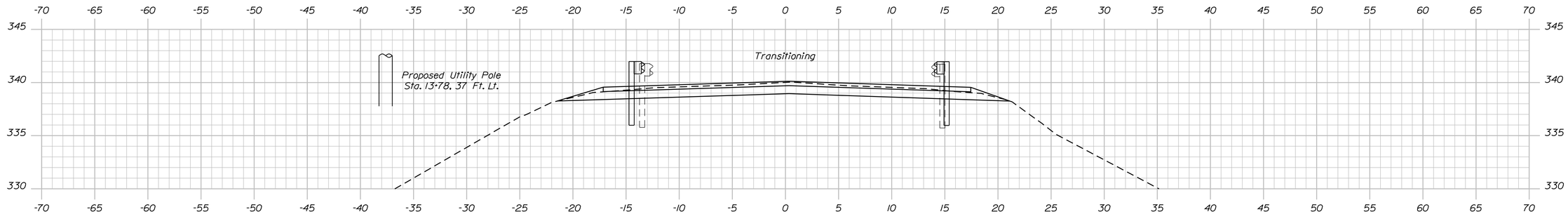

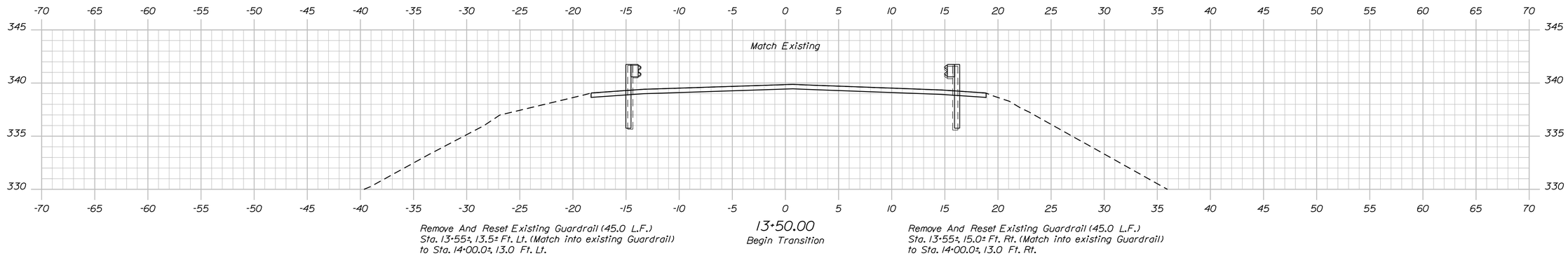

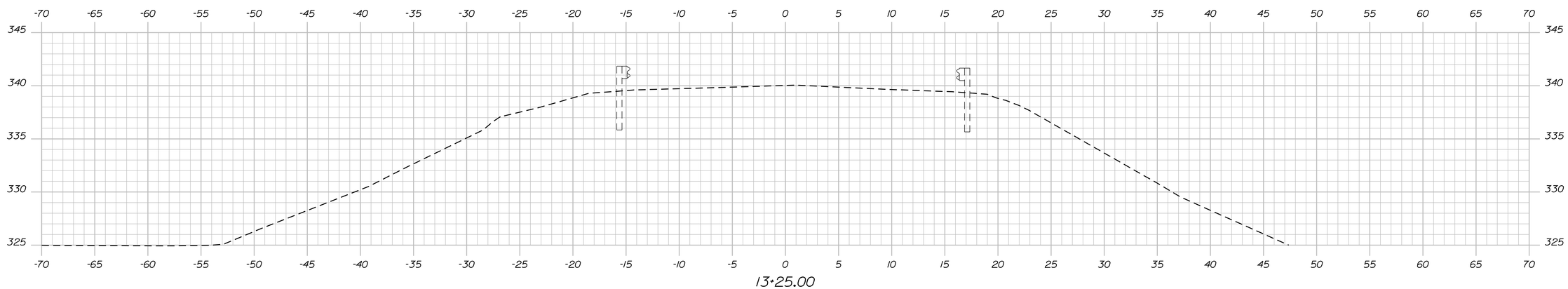

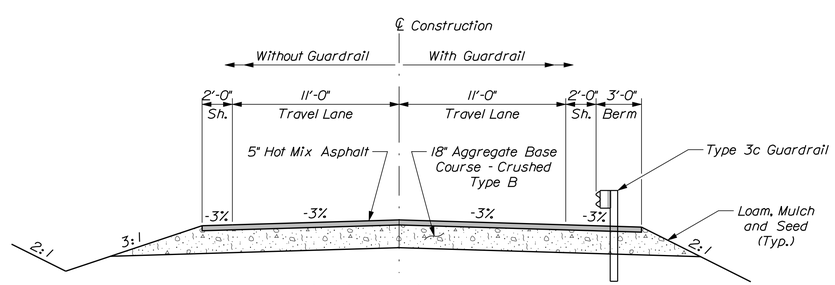

TYPICAL APPROACH SECTION

STATE OF MAINE
DEPARTMENT OF TRANSPORTATION

BH-1786(900)X

PIN 17869.00

BRIDGE NO. 3734

BRIDGE PLANS

		BY	DATE
PROJ. MANAGER	S. BOOGE		
DESIGN-DETAILED	M. WIGHT	D. SHAW	JUN 2011
CHECKED-REVIEWED	-----	-----	-----
DESIGN2-DETAILED2	-----	-----	-----
DESIGN3-DETAILED3	-----	-----	-----
REVISIONS 1	-----	-----	-----
REVISIONS 2	-----	-----	-----
REVISIONS 3	-----	-----	-----
REVISIONS 4	-----	-----	-----
FIELD CHANGES	-----	-----	-----

SIGNATURE

P.E. NUMBER

DATE

BOUNDARY BRIDGE
PRESTILE STREAM
BRIDGEWATER AROOSTOOK COUNTY

CROSS SECTIONS

SHEET NUMBER

9

OF 29

Sta. 13+25 to Sta. 13+75

Filename: ...\MSTA\009_13+25-13+75.dgn Division: BRIDGE Username: david.shaw Date:3/13/2013

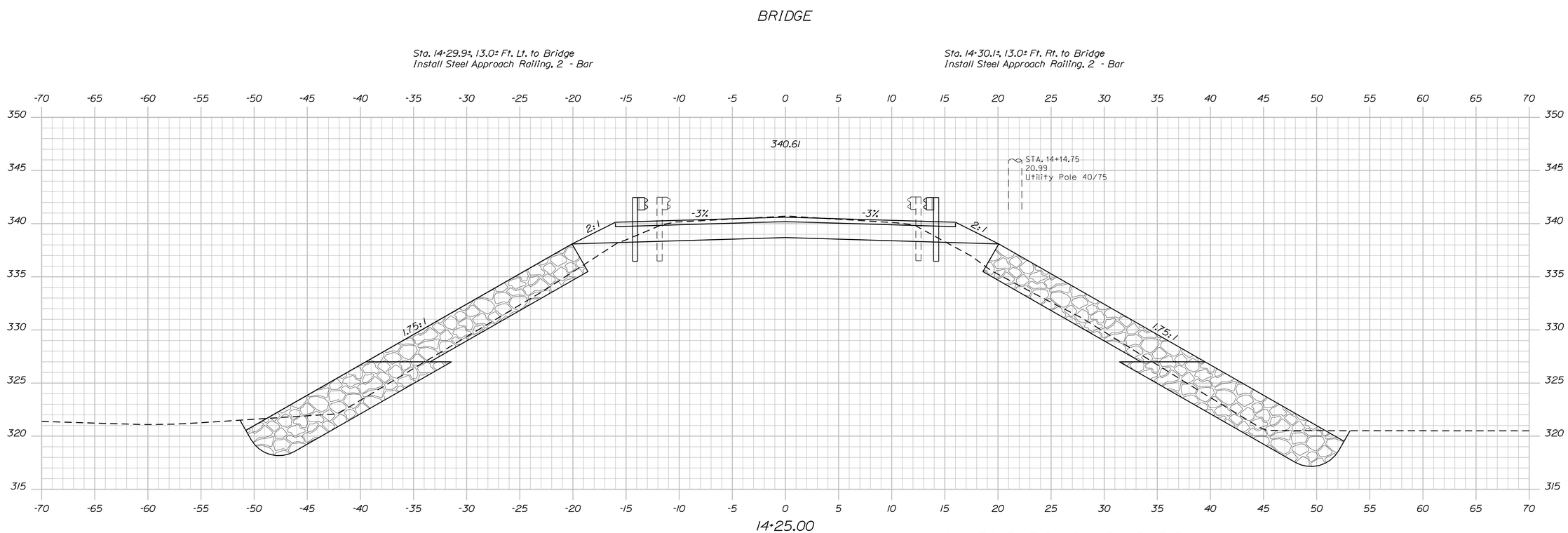

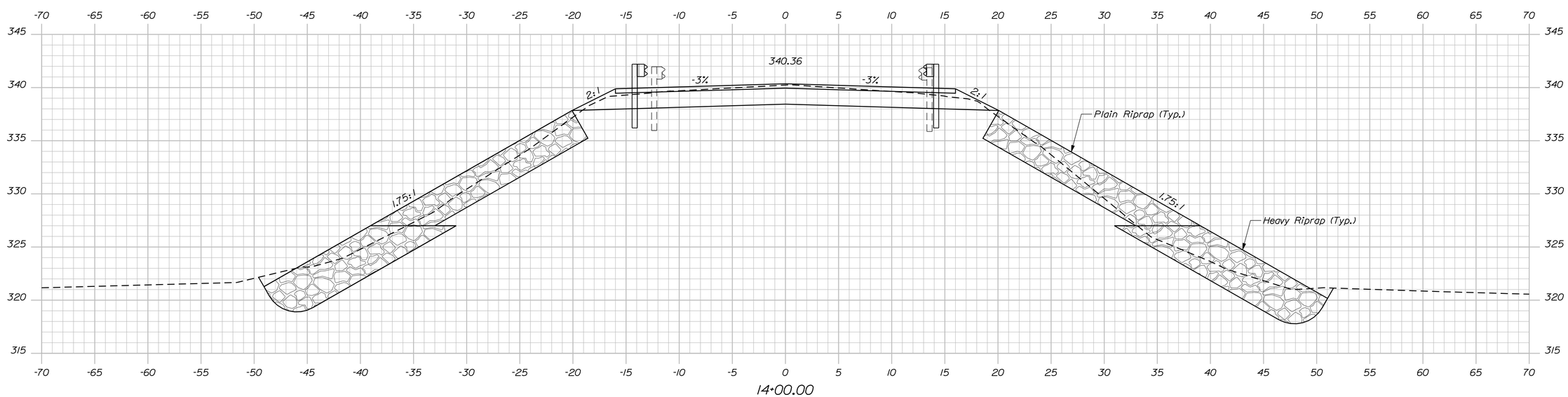

STATE OF MAINE
DEPARTMENT OF TRANSPORTATION

BH-1786(900)X

PIN 17869.00

BRIDGE NO. 3734

BRIDGE PLANS

PROJ. MANAGER	S. BOOGE	BY	DATE
DESIGN-DETAILED	M. WIGHT	D. SHAW	JUN 2011
CHECKED-REVIEWED			
DESIGN2-DETAILED2			
DESIGN3-DETAILED3			
REVISIONS 1			
REVISIONS 2			
REVISIONS 3			
REVISIONS 4			
FIELD CHANGES			

SIGNATURE

P.E. NUMBER

DATE

BOUNDARY BRIDGE
PRESTILE STREAM
BRIDGEWATER AROOSTOOK COUNTY

CROSS SECTIONS

SHEET NUMBER

10

OF 29

Sta. 14+00 to Sta. 14+25

Filename: ...\MSTA\010_14-00-14-25.dgn Division: BRIDGE Username: david.shaw Date:3/13/2013

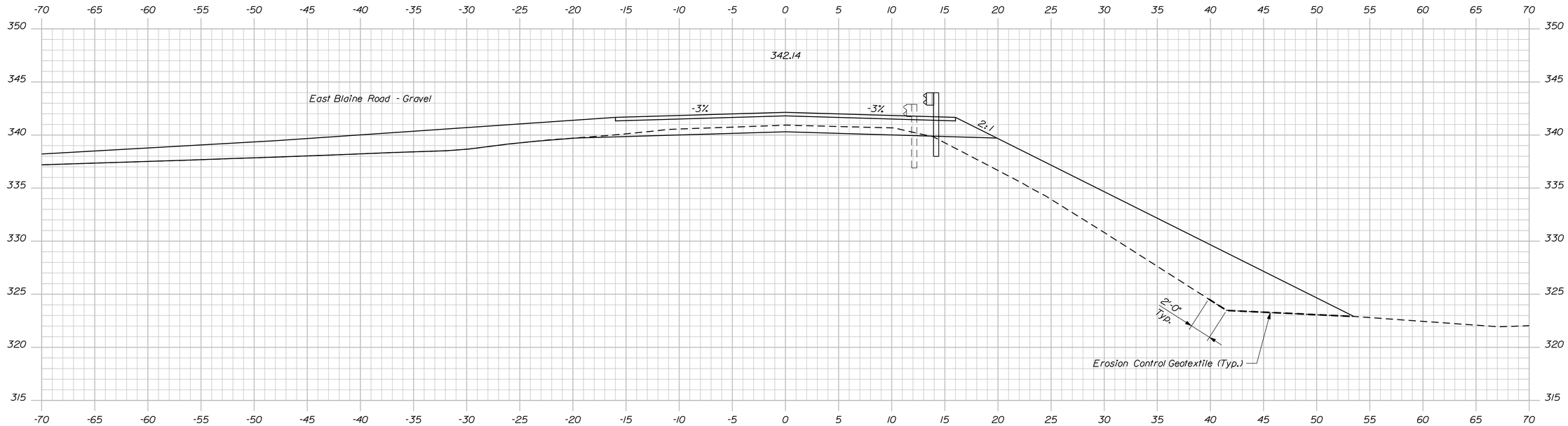

15+75.00

Sta. 15+72.5±, 13.0± Ft. Rt. to Sta. 16+73.0±, 13.0± Ft. Rt.
Install 100.0 L.F. of Type 3c Guardrail

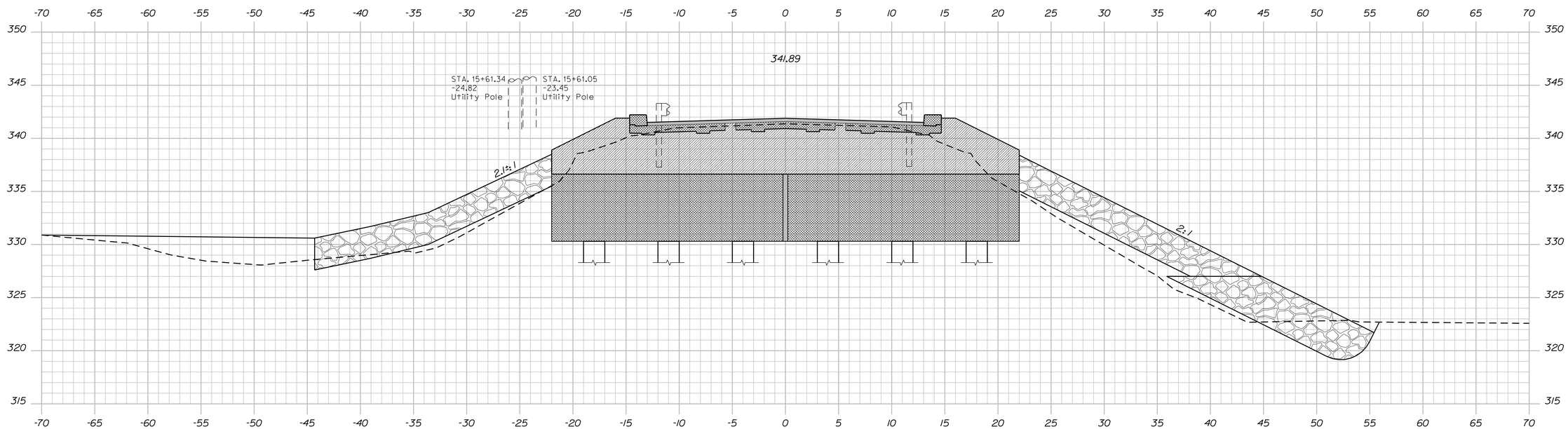

15+50.00

Bridge to Sta. 15+60.0±, 13.0± Ft. Lt.
Install Steel Approach Railing, 2 - Bar
Sta. 15+60.0±, 13.0± Ft. Lt. to Sta. 15+69.8±, 20.2± Ft. Lt.
Install Bridge Transition Type 2 with a 10.0 Ft. Radius

Bridge to Sta. 15+60.0±, 13.0± Ft. Rt.
Install Steel Approach Railing, 2 - Bar
Sta. 15+60.0±, 13.0± Ft. Rt to Sta. 15+72.5±, 13.0± Ft. Rt.
Install Bridge Transition Type 2

Install Erosion Control Geotextile from
Sta. 15+52± Rt. to Sta. 16+78± Rt.

STATE OF MAINE
DEPARTMENT OF TRANSPORTATION

BH-1786(900)X

PIN 17869.00

BRIDGE NO. 3734

BRIDGE PLANS

		BY	DATE
PROJ. MANAGER	S. BOOGE		
DESIGN-DETAILED	M. WIGHT	D. SHAW	JUN 2011
CHECKED-REVIEWED			
DESIGN2-DETAILED2			
DESIGN3-DETAILED3			
REVISIONS 1			
REVISIONS 2			
REVISIONS 3			
REVISIONS 4			
FIELD CHANGES			

SIGNATURE

P.E. NUMBER

DATE

BOUNDARY BRIDGE
PRESTILE STREAM
BRIDGEWATER AROOSTOOK COUNTY

CROSS SECTIONS

SHEET NUMBER

11

OF 29

Sta. 15+50 to Sta. 15+75

Filename: ...\MSTA\011_15+50-15+75.dgn Division: BRIDGE Username: david.shaw Date:3/13/2013

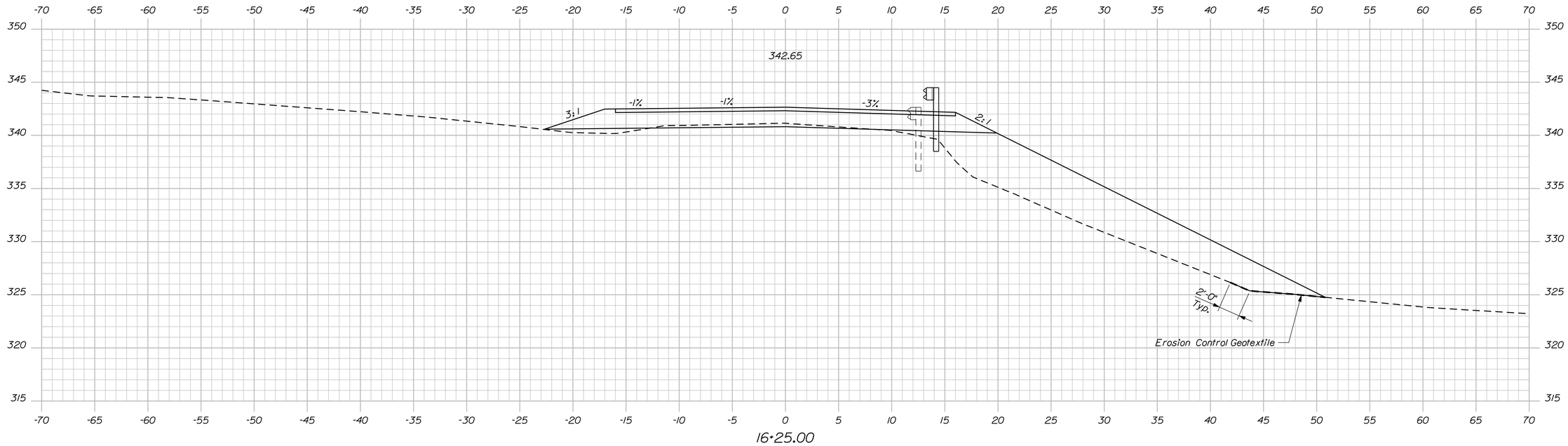

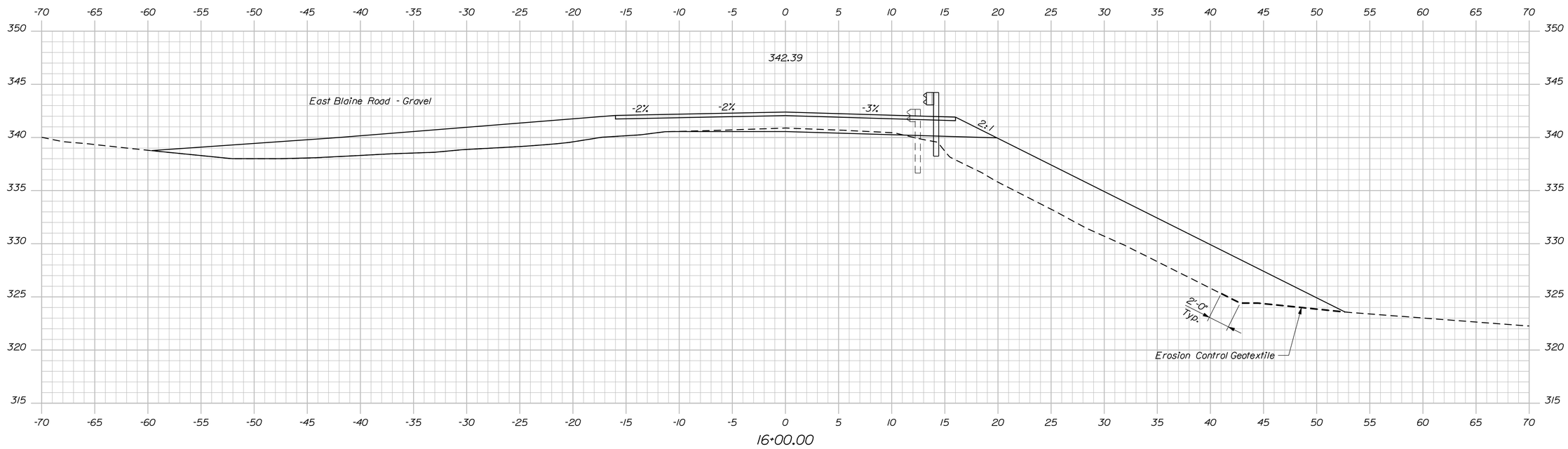

STATE OF MAINE
DEPARTMENT OF TRANSPORTATION

BH-1786(900)X

PIN 17869.00

BRIDGE NO. 3734

BRIDGE PLANS

PROJ. MANAGER	S. BOOGE			
DESIGN-DETAILED	M. WIGHT	D. SHAW	JUN 2011	
CHECKED-REVIEWED	----	----	----	SIGNATURE
DESIGN2-DETAILED2	----	----	----	----
DESIGN3-DETAILED3	----	----	----	P.E. NUMBER
REVISIONS 1	----	----	----	----
REVISIONS 2	----	----	----	----
REVISIONS 3	----	----	----	DATE
REVISIONS 4	----	----	----	----
FIELD CHANGES	----	----	----	----

BOUNDARY BRIDGE
PRESTILE STREAM
BRIDGEWATER AROOSTOOK COUNTY

CROSS SECTIONS

SHEET NUMBER
12
OF 29

Sta. 16+00 to Sta. 16+25

Filename: ...\MSTA\012_16+00-16+25.dgn Division: BRIDGE Username: david.shaw Date:3/13/2013

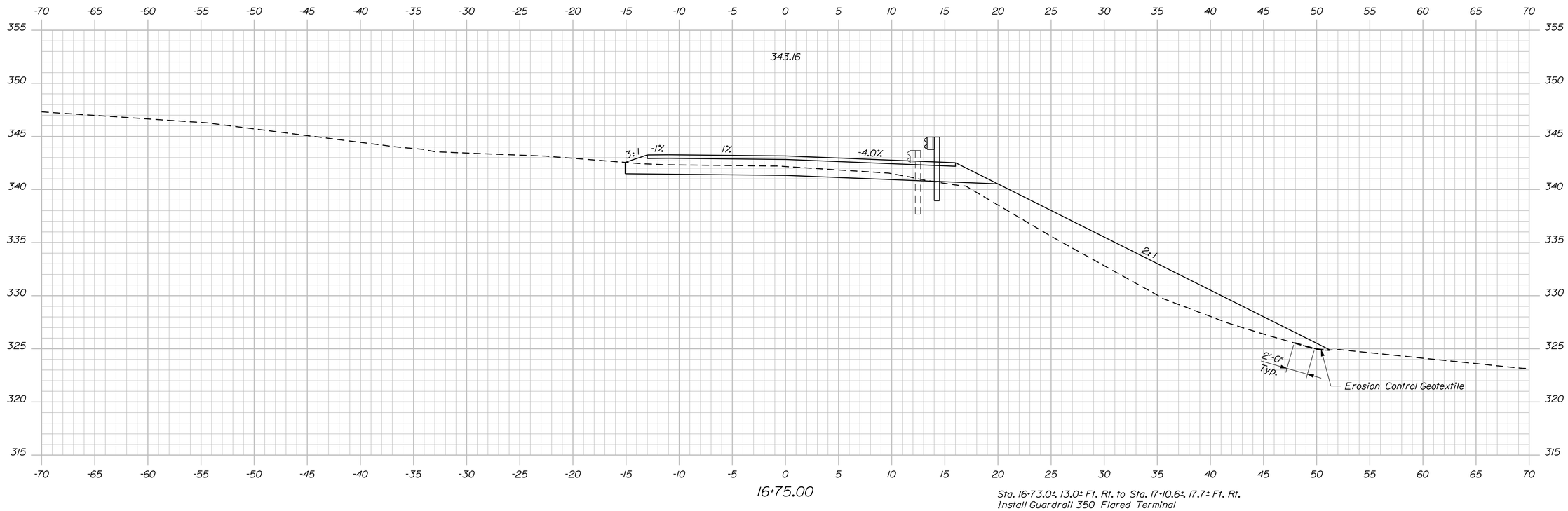

Sta. 16+73.0±, 13.0± Ft. Rt. to Sta. 17+10.6±, 17.7± Ft. Rt.
Install Guardrail 350 Flared Terminal

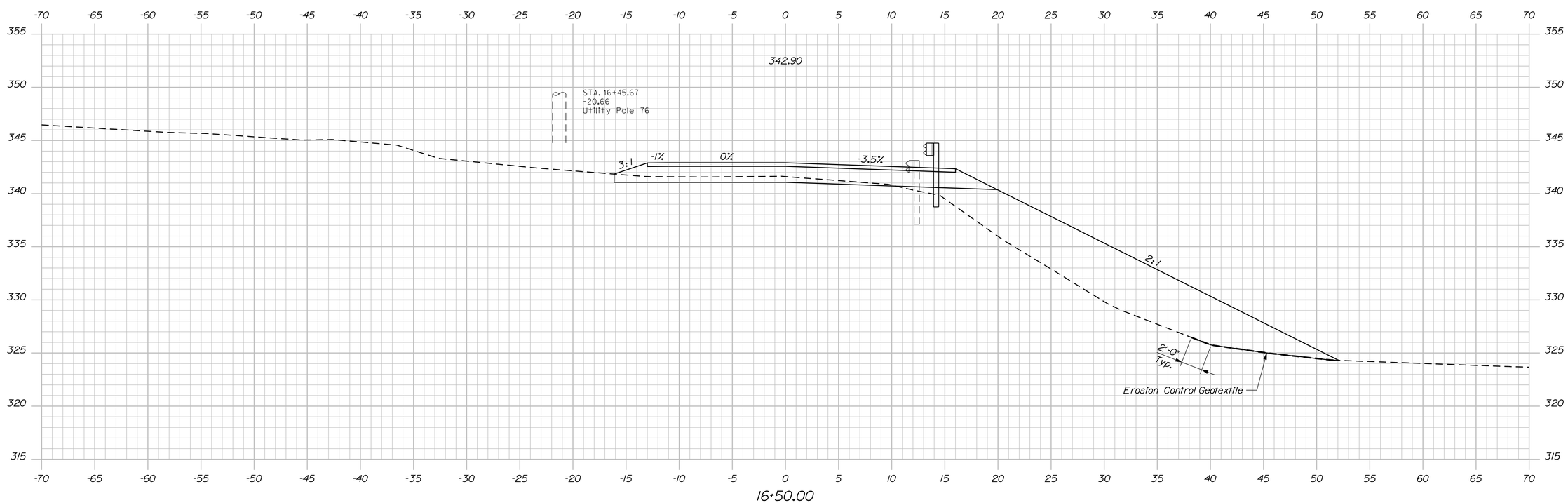

STATE OF MAINE
DEPARTMENT OF TRANSPORTATION

BH-1786(900)X

PIN 17869.00

BRIDGE NO. 3734

BRIDGE PLANS

PROJ. MANAGER	S. BOOGE	BY	DATE
DESIGN-DETAILED	M. WIGHT	D. SHAW	JUN 2011
CHECKED-REVIEWED	----	----	----
DESIGN2-DETAILED2	----	----	----
DESIGN3-DETAILED3	----	----	----
REVISIONS 1	----	----	----
REVISIONS 2	----	----	----
REVISIONS 3	----	----	----
REVISIONS 4	----	----	----
FIELD CHANGES	----	----	----

SIGNATURE

P.E. NUMBER

DATE

BOUNDARY BRIDGE
PRESTILE STREAM
BRIDGEWATER AROOSTOOK COUNTY

CROSS SECTIONS

SHEET NUMBER

13

OF 29

Sta. 16+50 to Sta. 16+75

Filename: ...\MSTA\013_16+50-16+75.dgn Division: BRIDGE Username: david.shaw Date:3/13/2013

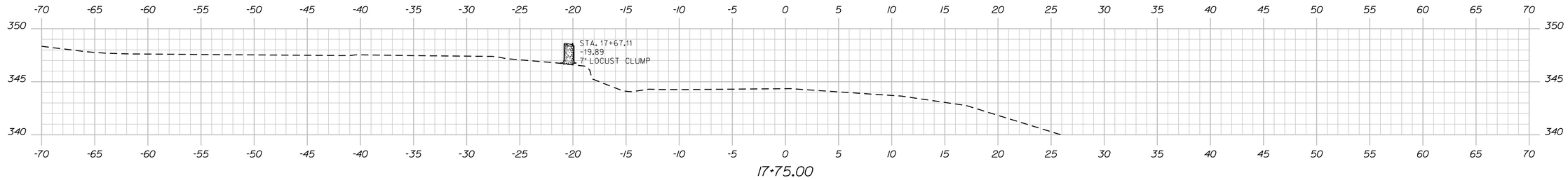

17+75.00

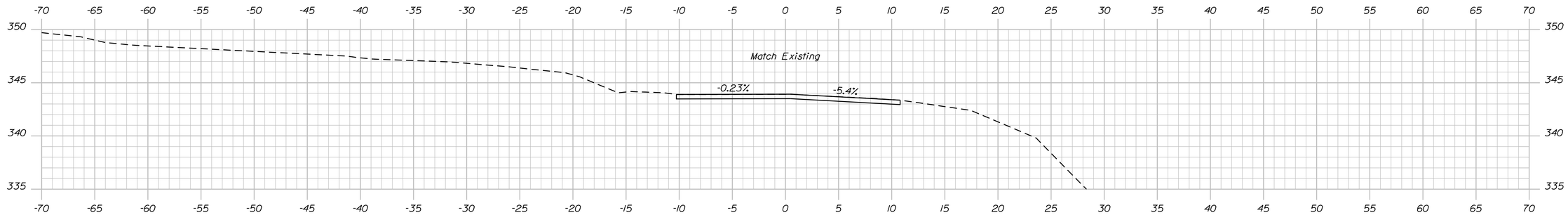

17+50.00
End Transition

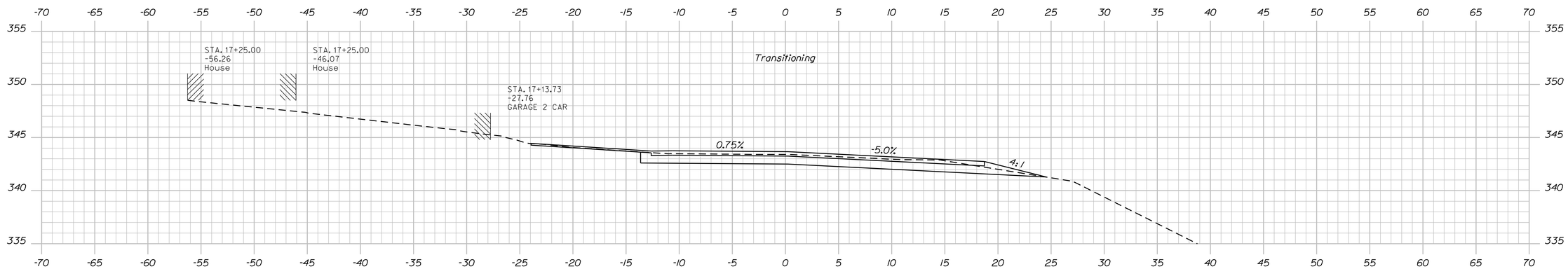

17+25.00

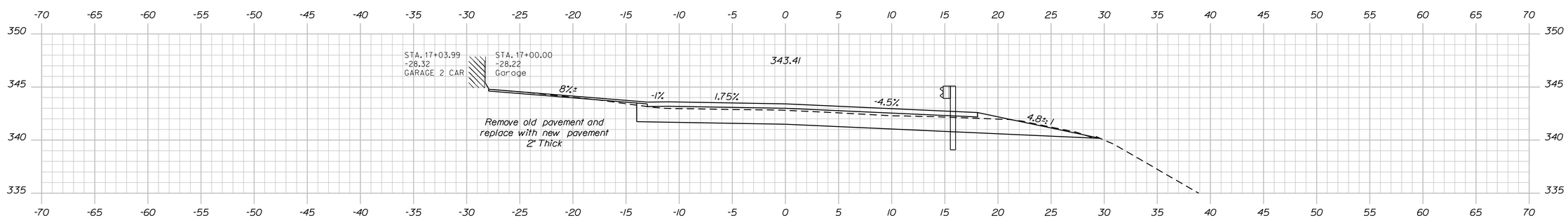

17+00.00
End Project / Begin Transition

STATE OF MAINE
DEPARTMENT OF TRANSPORTATION

BH-1786(900)X

PIN
17869.00

BRIDGE NO. 3734

BRIDGE PLANS

			DATE
PROJ. MANAGER	S. BOOGE	BY	JUN 2011
DESIGN-DETAILED	M. WIGHT	D. SHAW	
CHECKED-REVIEWED			
DESIGN2-DETAILED2			
DESIGN3-DETAILED3			
REVISIONS 1			
REVISIONS 2			
REVISIONS 3			
REVISIONS 4			
FIELD CHANGES			

SIGNATURE

P.E. NUMBER

DATE

BOUNDARY BRIDGE
PRESTILE STREAM
BRIDGEWATER AROOSTOOK COUNTY

CROSS SECTIONS

SHEET NUMBER
14
OF 29

Sta. 17+00 to Sta. 17+75

Filename: ...\MSTA\014_17-00-17+75.dgn Division: BRIDGE Username: david.shaw Date:3/13/2013

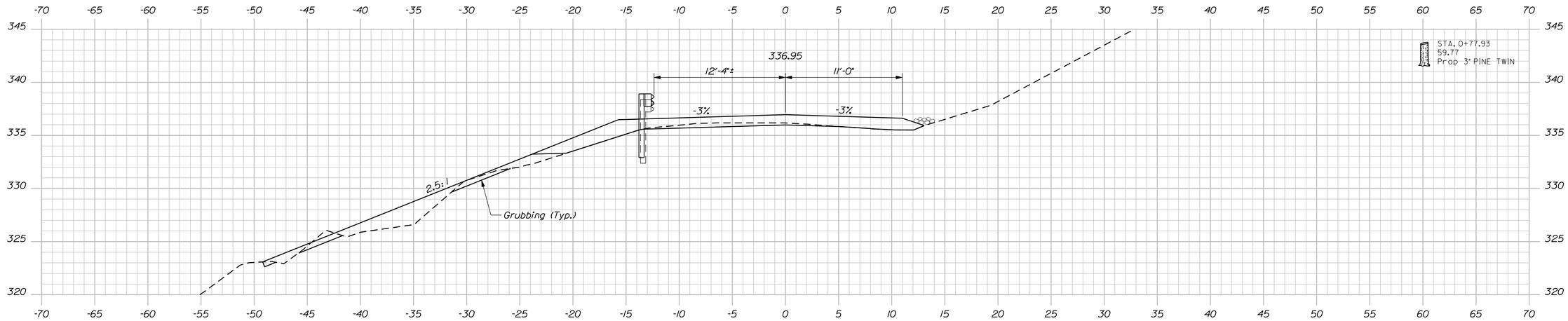

Sta. 0+85.3±, 13.0± Ft. Lt. to Sta 1+22.8±, 12.0± Ft. Lt.
Install Energy Absorbing System (ET-PLUS)

1+00.00

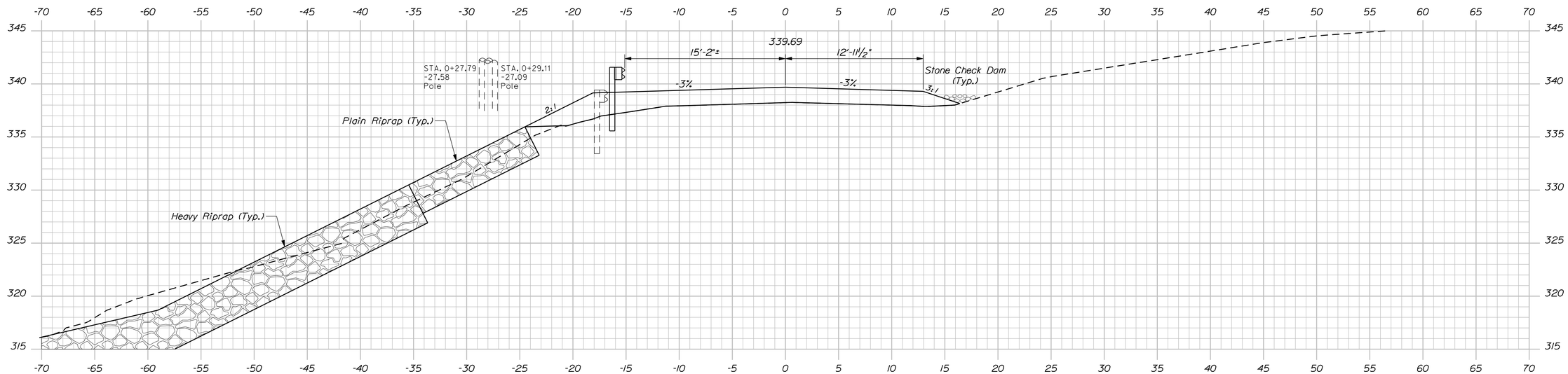

Sta. 15+69.8±, 20.2± Ft. Lt. (Boundary Line Road) to
Sta. 0+35.4±, 16.0± Ft. Lt. (East Blaine Road)
Install Bridge Transition Type 2 with a 30 Ft. Radius
Sta. 0+35.4±, 16.0± Ft. Lt. to Sta. 0+85.3±, 13.0± Ft. Lt.
Install 50.0 L.F. of Type 3c Guardrail

0+50.00

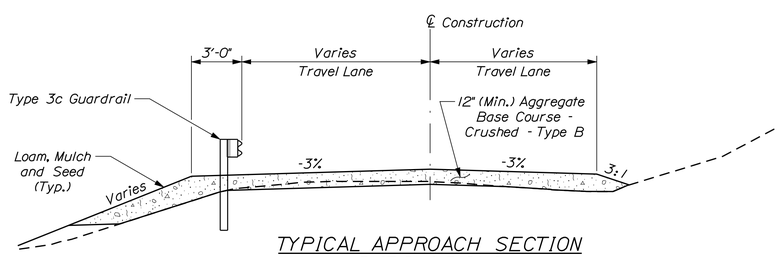

TYPICAL APPROACH SECTION
EAST BLAINE ROAD

STATE OF MAINE
DEPARTMENT OF TRANSPORTATION

BH-1786(900)X

PIN 17869.00

BRIDGE NO. 3734

BRIDGE PLANS

PROJ. MANAGER	S. BOOGE	BY	DATE
DESIGN-DETAILED	M. WIGHT	D. SHAW	JUN 2011
CHECKED-REVIEWED	------	------	------
DESIGN2-DETAILED2	------	------	------
DESIGN3-DETAILED3	------	------	------
REVISIONS 1	------	------	------
REVISIONS 2	------	------	------
REVISIONS 3	------	------	------
REVISIONS 4	------	------	------
FIELD CHANGES	------	------	------

SIGNATURE

P.E. NUMBER

DATE

EAST BLAINE ROAD
PRESTILE STREAM
BRIDGEWATER AROOSTOOK COUNTY

CROSS SECTIONS

SHEET NUMBER

15

OF 29

Sta. 0+50 to Sta. 1+00

Filename: ...\MSTA\015_0+50-1+00_EBR.dgn Division: BRIDGE Username: david.shaw Date:3/13/2013

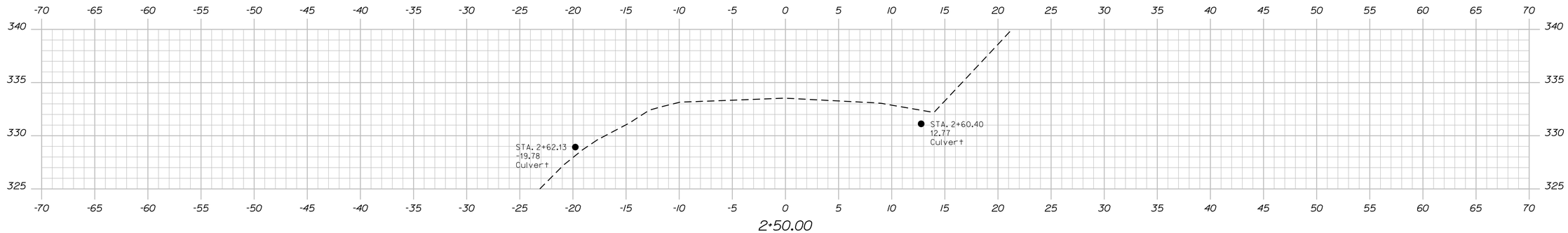

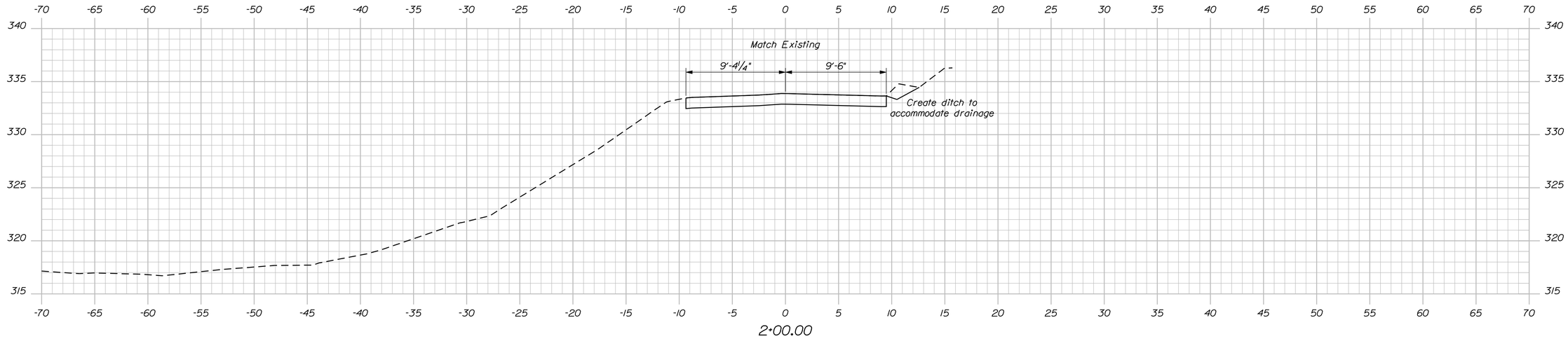

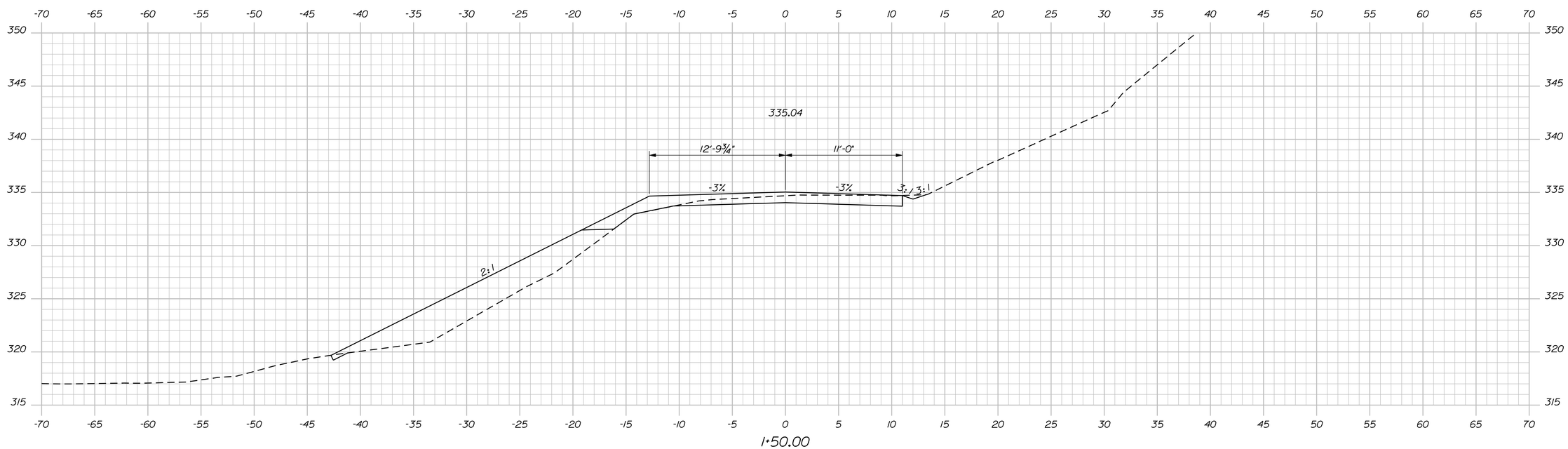

STATE OF MAINE
DEPARTMENT OF TRANSPORTATION

BH-1786(900)X

PIN 17869.00

BRIDGE NO. 3734

BRIDGE PLANS

PROJ. MANAGER	S. BOOGE	BY	DATE
DESIGN-DETAILED	M. WIGHT	D. SHAW	JUN 2011
CHECKED-REVIEWED	------	------	------
DESIGN2-DETAILED2	------	------	------
DESIGN3-DETAILED3	------	------	------
REVISIONS 1	------	------	------
REVISIONS 2	------	------	------
REVISIONS 3	------	------	------
REVISIONS 4	------	------	------
FIELD CHANGES	------	------	------

SIGNATURE

P.E. NUMBER

DATE

EAST BLAINE ROAD
PRESTILE STREAM
BRIDGEWATER AROOSTOOK COUNTY

CROSS SECTIONS

SHEET NUMBER

16

OF 29

Sta. 1+50 to Sta. 2+50

Filename: ...\MSTA\016_1+50-2+50_EBR.dgn Division: BRIDGE Username: david.shaw Date:3/13/2013

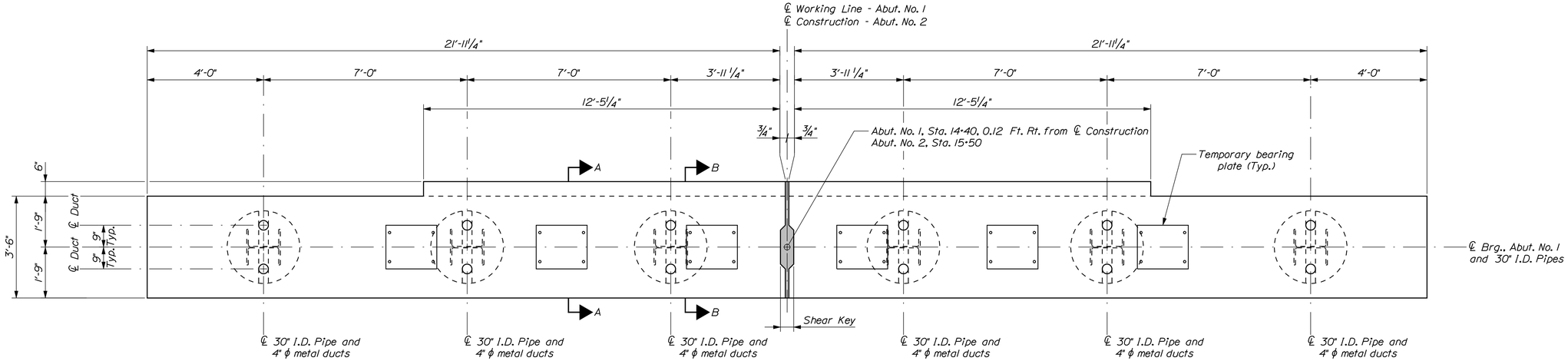

PLAN

Concrete jackets around piles not shown for clarity

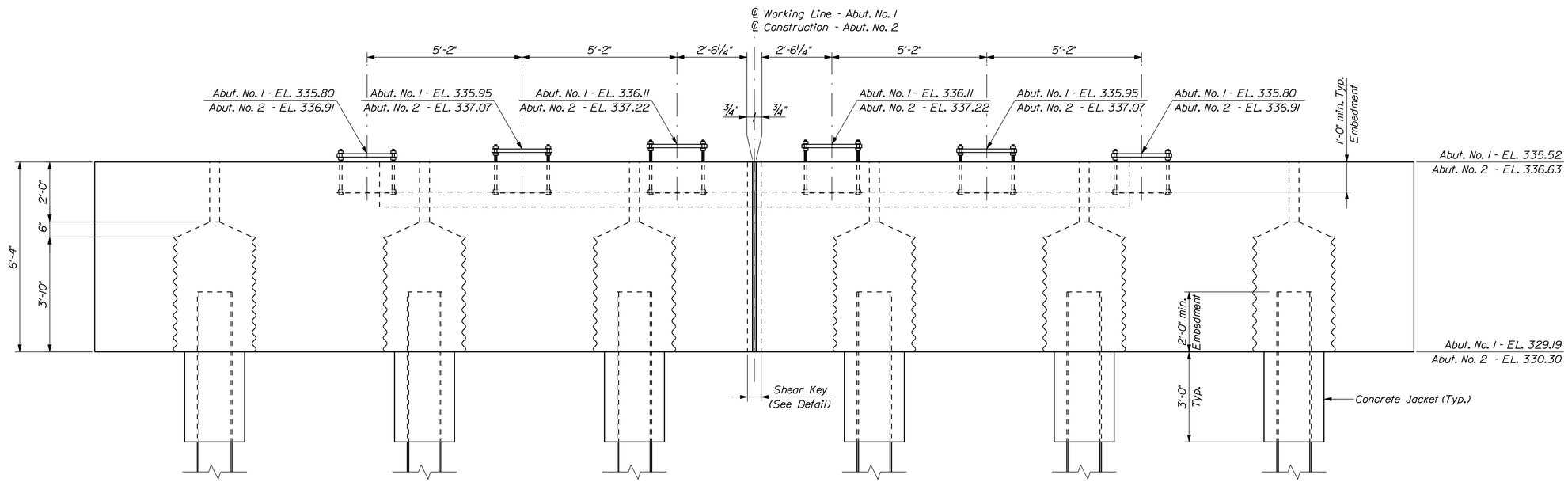

ELEVATION

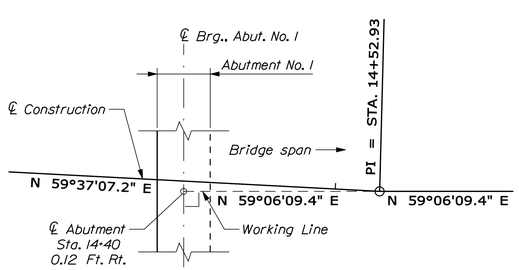

ABUTMENT NO. 1 LAYOUT

PILE NOTES

1. The maximum factored pile load is 414 kips.

2. H-pile material shall be ASTM A 572, Grade 50.

3. Piles shall not be out of position shown by more than 2 inches in any direction.

4. Estimate of piles required:

   Abutment No. 1: 6 ~ HP 14x89 @ 41 feet
   Abutment No. 2: 6 ~ HP 14x89 @ 27 feet

5. The Contractor shall make provisions in ordered pile lengths to account for additional length needed to accomodate the leads and an additional 4 feet needed for those piles undergoing dynamic testing.

6. All piles shall be equipped with a pile tip in accordance with Special Provision 501.

PILE NOTES (Continued)

7. The Contractor shall perform and submit a wave equation analysis for review and acceptance by the Resident. The maximum allowable driving stress is 0.90 times Fy. The submittal analyses shall include the proposed stopping criteria based on the wave equation analysis and the proposed driving system. The stopping criteria shall include the blows per inch and the number of 1-in. driving intervals at which pile installation may be terminated. The cost of performing the wave equation analysis will be considered incidental to Item No. 501.92, Pile Driving Equipment Mobilization.

8. The Contractor shall perform 2 dynamic load test(s) to confirm the ultimate capacity of the piles, and verify or revise the proposed driving/stopping criteria. The required nominal resistance for the pile is the factored axial pile load divided by a resistance factor of 0.65 per LRFD Specifications. The dynamic test shall be performed on the first production pile driven, and the remainder of the production piles driven with the driving/stopping criteria indicated by the dynamic load test.

PILE NOTES (Continued)

9. The Contractor shall provide a pile driving system which is capable of completing the required dynamic testing and production pile driving, without overstressing the piles, where the maximum driving stress is 0.90 times the yield strength of the pile.

10. The driving system shall be operating at efficiency equal to or greater than that used in the wave equation submittal. If the driving system is not operating at the required efficiency, as indicated by the Contractor's wave equation analyses, the Department's wave equation analysis and/or dynamic load test results, the Contractor shall correct or replace the driving system components as required to provide an acceptable driving system, as approved by the Department. Correcting or replacing driving system components resulting from driving system inefficiency, including additional wave equation analyses and/or dynamic load tests, shall be at no additional cost to the Department.

STATE OF MAINE
DEPARTMENT OF TRANSPORTATION

BH-1786(900)X

WIN 17869.00

BRIDGE NO. 3734

BRIDGE PLANS

		BY	DATE
PROJ. MANAGER	S. BRIDGE		
DESIGN-DETAILED	M. WIGHT	D. SHAW	JUN 2011
CHECKED-REVIEWED	-----	-----	-----
DESIGN2-DETAILED2	-----	-----	-----
DESIGN3-DETAILED3	-----	-----	-----
REVISIONS 1	-----	-----	-----
REVISIONS 2	-----	-----	-----
REVISIONS 3	-----	-----	-----
REVISIONS 4	-----	-----	-----
FIELD CHANGES	-----	-----	-----

SIGNATURE

P.E. NUMBER

DATE

BOUNDARY BRIDGE
PRESTILE STREAM
BRIDGEWATER AROOSTOOK COUNTY

PRECAST ABUTMENT

SHEET NUMBER

17

OF 29

Filename: ...\MSTA\017_Abutment_Precast.dgn Division: BRIDGE Username: david.shaw Date:3/13/2013

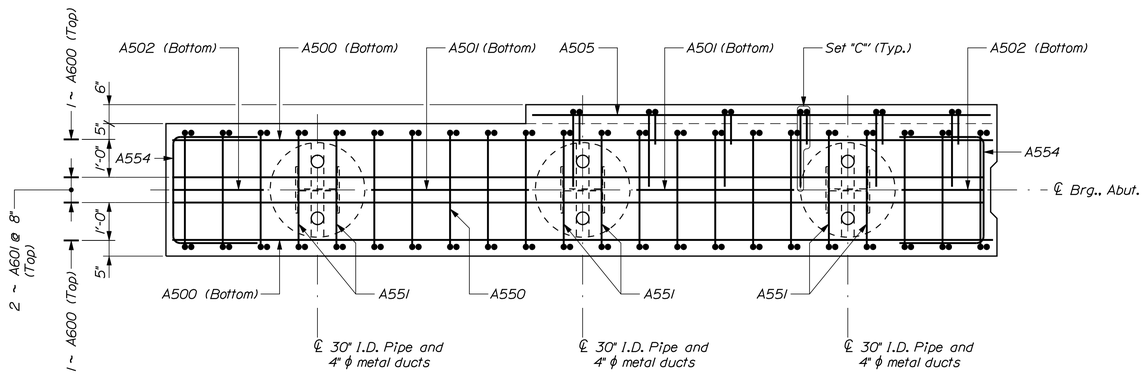

PLAN

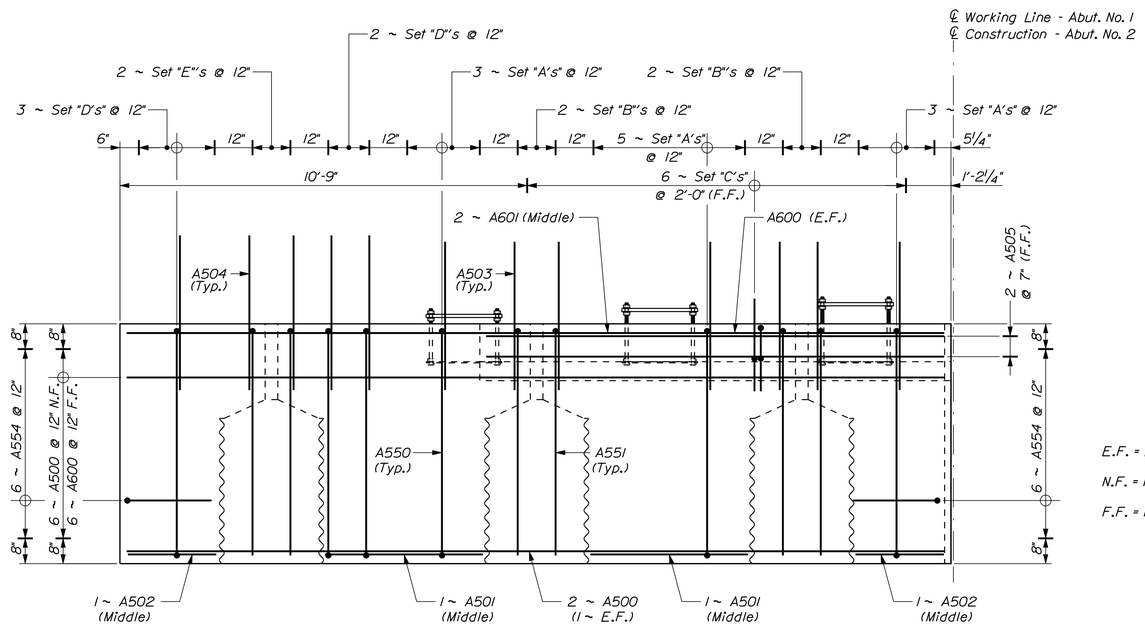

E.F. = Each Face

N.F. = Near Face

F.F. = Far Face

ELEVATION

Abutment No. 1 - Left Segment Shown
Right Segment Symmetrical from ℄ Construction

Set "A" = 1 ~ A550, 2 ~ A503 (1 ~ N.F.* & 1 ~ F.F.)
Set "B" = 1 ~ A551, 2 ~ A503 (1 ~ N.F.* & 1 ~ F.F.)
Set "C" = 1 ~ A553 (F.F.), 1 ~ A552 (F.F.)
Set "D" = 1 ~ A550, 2 ~ A504 (1 ~ N.F. & 1 ~ F.F.)
Set "E" = 1 ~ A551, 2 ~ A504 (1 ~ N.F. & 1 ~ F.F.)

* Bar A503 N.F. will need to be adjusted to miss girder.

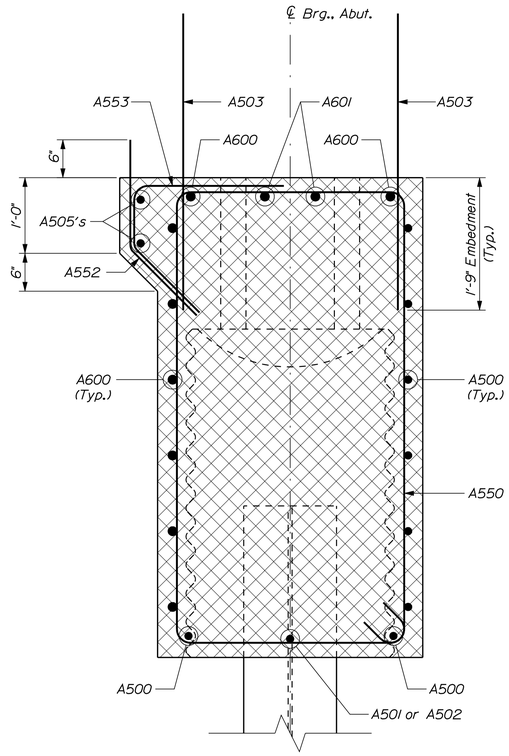

SECTION A-A

Between piles

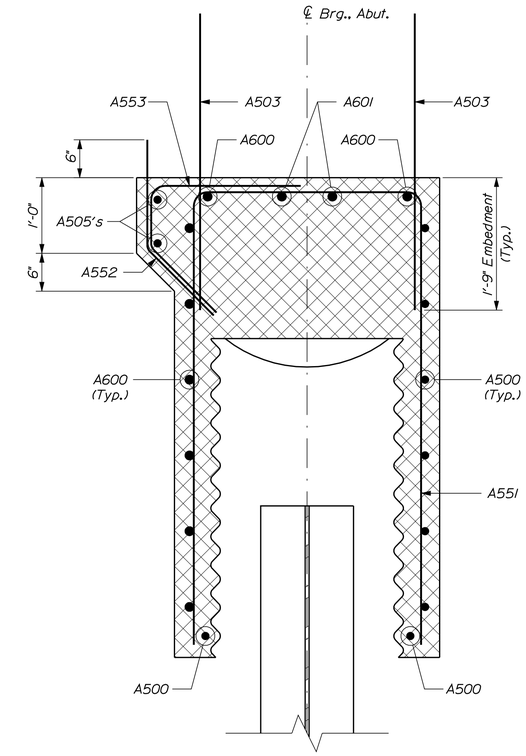

SECTION B-B

Anchor plate not shown for clarity

PRECAST ABUTMENT NOTES

1. Structural Earth Excavation and Abutments, requiring more than 12 inches below the bottom of the structure, will be paid for in accordance with Standard Specifications Section 206, Structural Excavation.

2. Reinforcing steel shall have a minimum concrete cover of 2 inches in the walls unless otherwise noted.

3. Construct French Drains behind the abutments and wingwalls in accordance with Standard Specifications Section 512, French Drains.

4. In order to facilitate erection of the precast deck units and to accurately match the side profile of the superstructure, it is anticipated that the top portions of the wingwalls will be cast in place. The Contractor may submit an alternate proposal to the Resident for approval.

5. Abutments and wingwalls shall be backfilled with granular borrow. Pay limits will be as shown on the plans.

6. Cover joints where waterstops are not required in accordance with Standard Details Section 502.

7. All excavation, labor and materials to construct the 2'-0" diameter concrete jacket located below the precast abutment and near the top of the H - pile will be paid for under Pay Item No. 534.76, Precast Abutment.

8. The 4 inch diameter ducts and 30 inch inner diameter corrugated metal pipes shall be galvanized in accordance with Section 506. Other types of pipes will not be allowed for abutment voids.

9. All voids shall be filled with self-consolidating concrete in accordance with Special Provision 502, Early Strength Concrete.

10. The anchor plate, 1 inch diameter threaded rods and necessary hardware to attach the anchor plate and temporary bearing plate shall be incidental to Pay Item No. 534.76, Precast Abutment.

11. The approximate pick weight for each abutment section is 36 tons.

STATE OF MAINE
DEPARTMENT OF TRANSPORTATION

BH-1786(900)X

WIN 17869.00

BRIDGE NO. 3734

BRIDGE PLANS

	BY	DATE
PROJ. MANAGER	S. BODGE	
DESIGN-DETAILED	M. WIGHT	JUN 2011
CHECKED-REVIEWED	D. SHAW	
DESIGN2-DETAILED2		
DESIGN3-DETAILED3		
REVISIONS 1		
REVISIONS 2		
REVISIONS 3		
REVISIONS 4		
FIELD CHANGES		

SIGNATURE

P.E. NUMBER

DATE

BOUNDARY BRIDGE
PRESTILE STREAM
BRIDGEWATER AROOSTOOK COUNTY

PRECAST ABUTMENT REINFORCEMENT

SHEET NUMBER

18

OF 29

Filename: ...\018_Abutment_Reinforcement.dgn Division: BRIDGE Username: dovid.shaw Date:3/13/2013

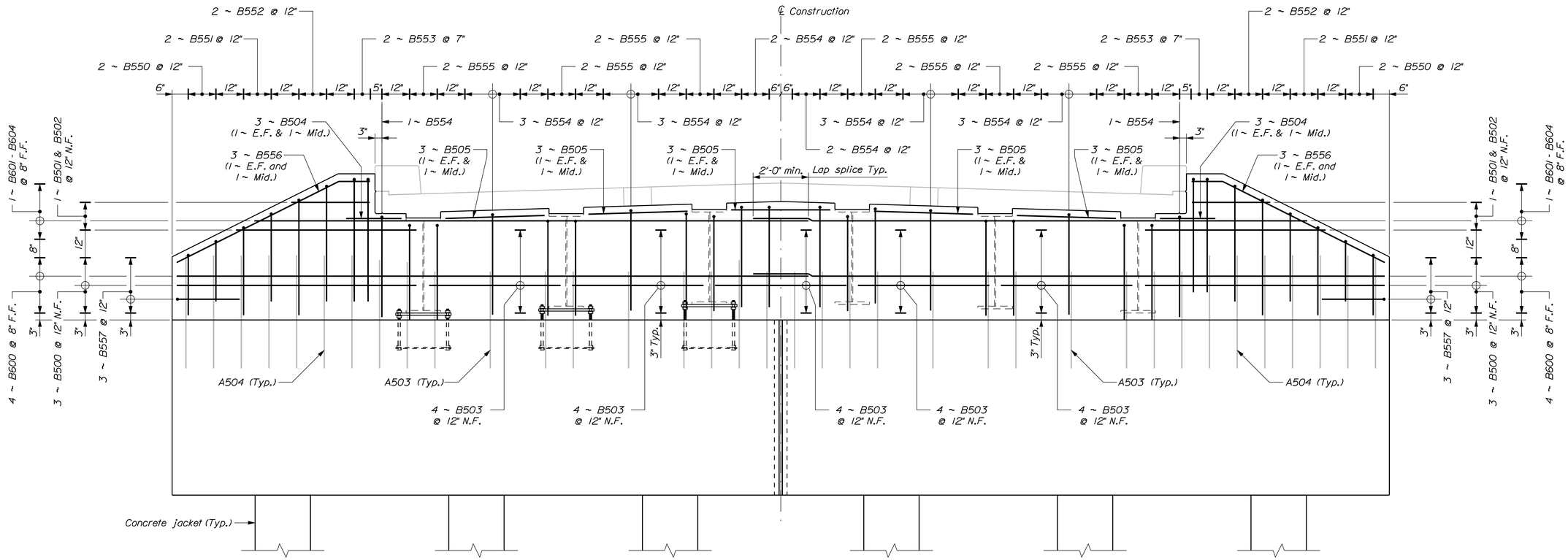

ELEVATION - CAST IN PLACE END DIAPHRAGM/WINGWALLS

Precast Abutment and Deck reinforcement not shown for clarity.

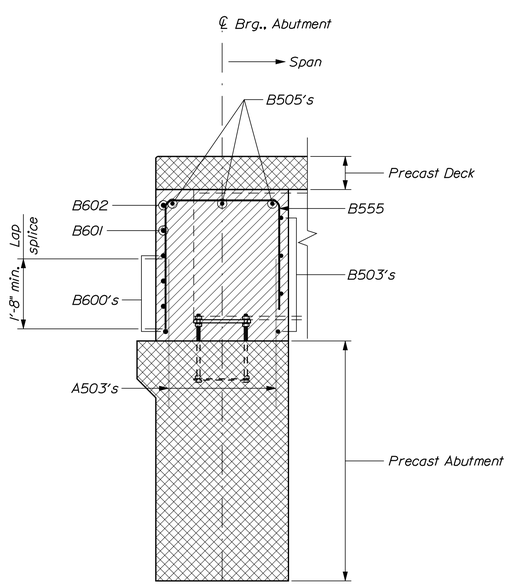

SECTION - NEAR GIRDERS

Precast Abutment and deck reinforcement not shown for clarity.

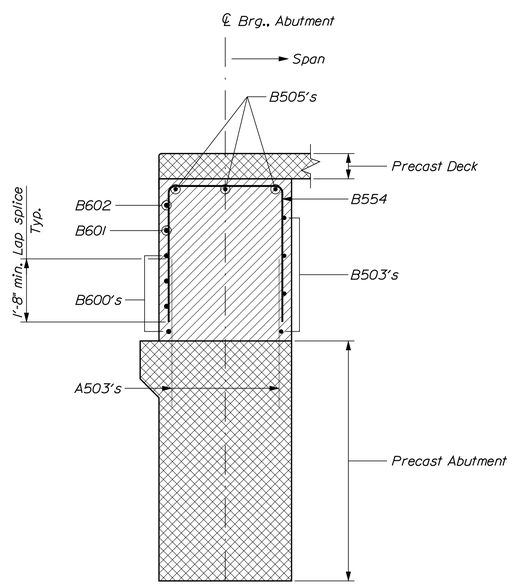

SECTION - BETWEEN GIRDERS

Precast Abutment and deck reinforcement not shown for clarity.

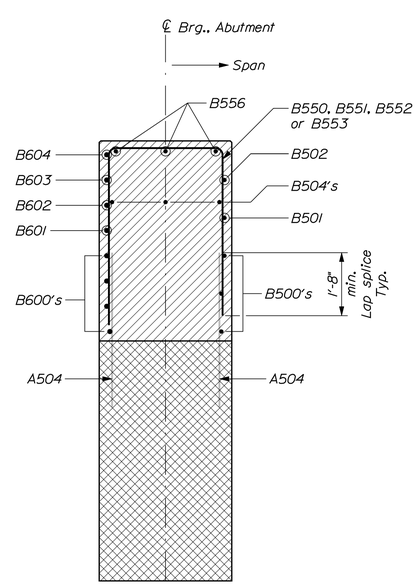

SECTION - WINGWALL

Precast Abutment reinforcement not shown for clarity.

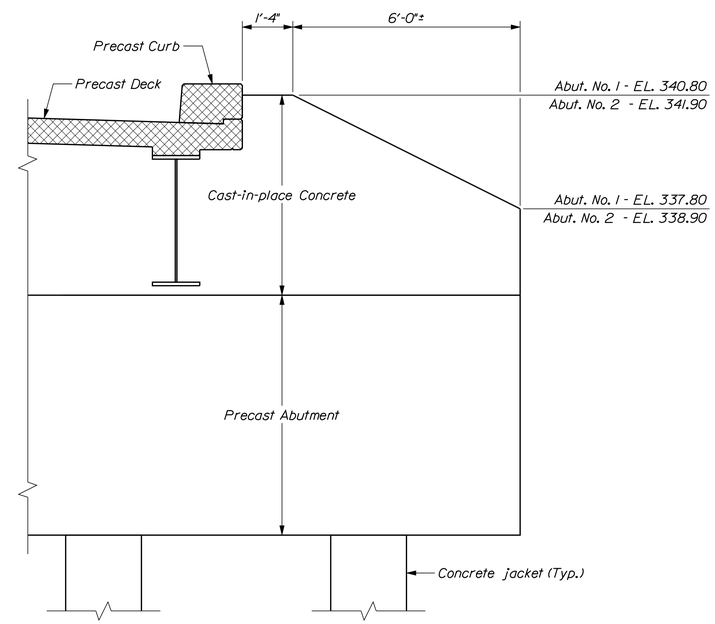

ELEVATION - WINGWALL ELEVATIONS

STATE OF MAINE
DEPARTMENT OF TRANSPORTATION

BH-1786(900)X

WIN 17869.00

BRIDGE NO. 3734

BRIDGE PLANS

PROJ. MANAGER	S. BOOGE	BY	DATE
DESIGN-DETAILED	M. WIGHT	D. SHAW	JUN 2011
CHECKED-REVIEWED	------	------	------
DESIGN2-DETAILED2	------	------	------
DESIGN3-DETAILED3	------	------	------
REVISIONS 1	------	------	------
REVISIONS 2	------	------	------
REVISIONS 3	------	------	------
REVISIONS 4	------	------	------
FIELD CHANGES	------	------	------

SIGNATURE

P.E. NUMBER

DATE

BOUNDARY BRIDGE
PRESTILE STREAM
BRIDGEWATER AROOSTOOK COUNTY

END DIAPHRAGM

SHEET NUMBER

19

OF 29

Filename: ...\MSTA\019_End_Diaphragm.dgn Division: BRIDGE Username: david.shaw Date:3/13/2013

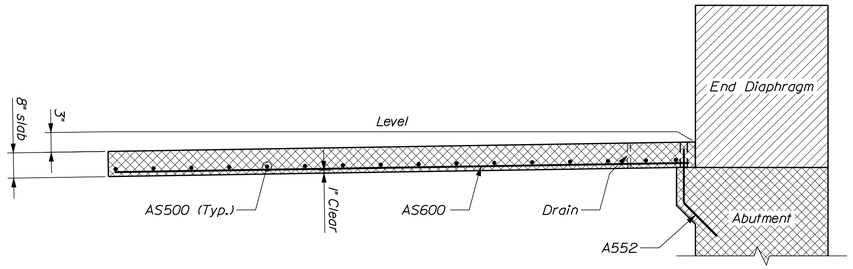

PRECAST APPROACH SLAB SECTION
Reinforcement not shown in Abutment and End Diaphragm for clarity

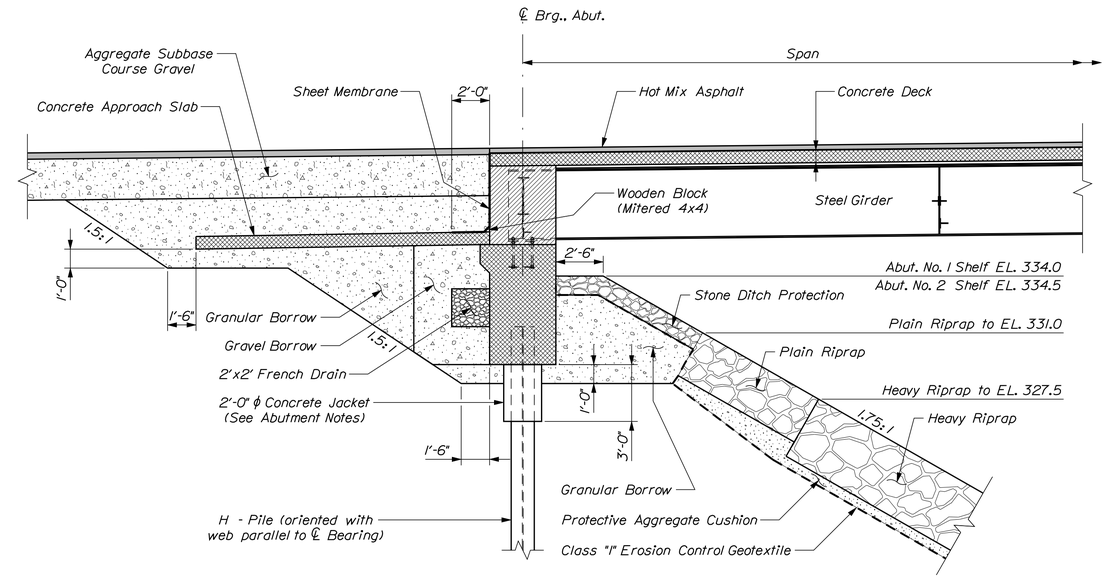

LONGITUDINAL SECTION

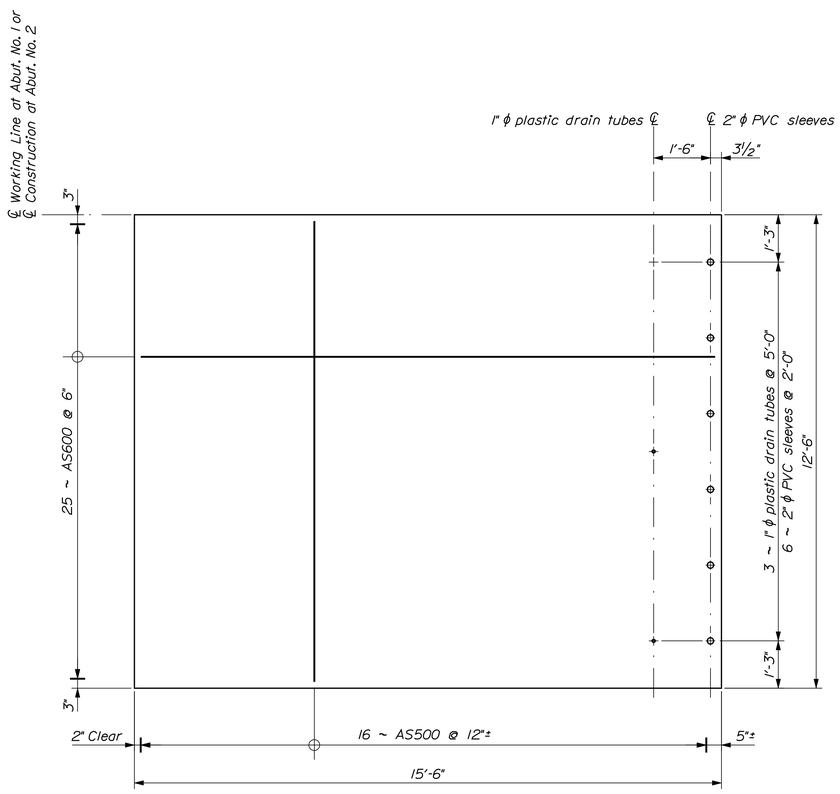

PRECAST APPROACH SLAB
4 Total (2 at each abutment)

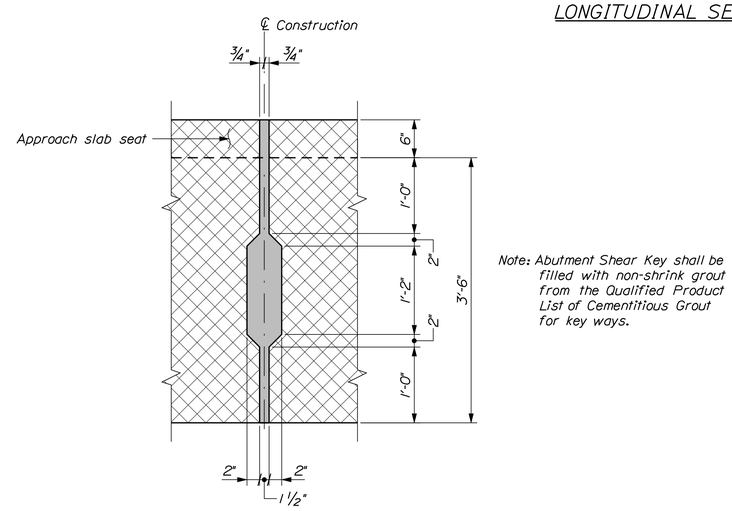

Note: Abutment Shear Key shall be filled with non-shrink grout from the Qualified Product List of Cementitious Grout for key ways.

ABUTMENT SHEAR KEY
(Plan view)

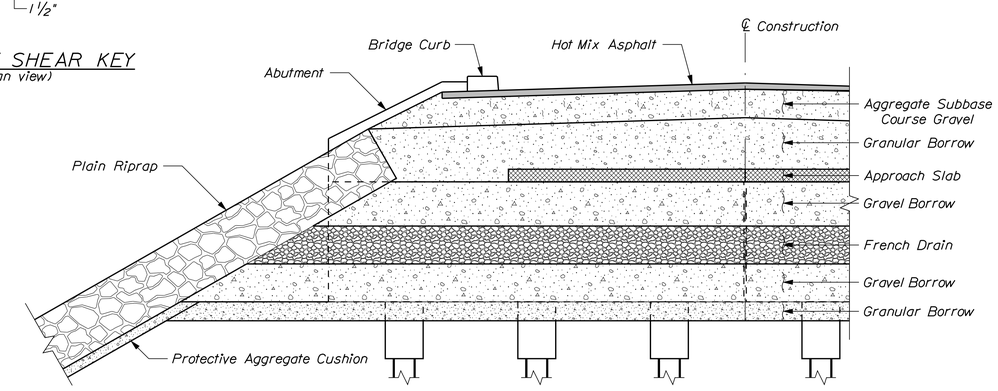

FRENCH DRAIN DETAIL
Section shown through French Drain

STATE OF MAINE
DEPARTMENT OF TRANSPORTATION

BH-1786(900)X

WIN 17869.00

BRIDGE NO. 3734

BRIDGE PLANS

	BY	DATE
PROJ. MANAGER	S. BOYDE	
DESIGN-DETAILED	M. WIGHT	D. SHAW	JUN 2011
CHECKED-REVIEWED	-----	-----	-----
DESIGN2-DETAILED2	-----	-----	-----
DESIGN3-DETAILED3	-----	-----	-----
REVISIONS 1	-----	-----	-----
REVISIONS 2	-----	-----	-----
REVISIONS 3	-----	-----	-----
REVISIONS 4	-----	-----	-----
FIELD CHANGES	-----	-----	-----

SIGNATURE
P.E. NUMBER
DATE

BOUNDARY BRIDGE
PRESTILE STREAM
BRIDGEWATER AROOSTOOK COUNTY

ABUTMENT DETAILS

SHEET NUMBER
20
OF 29

Filename: ...\MSTA\020_Abutment_Details.dgn Division: BRIDGE Username: david.shaw Date:3/13/2013

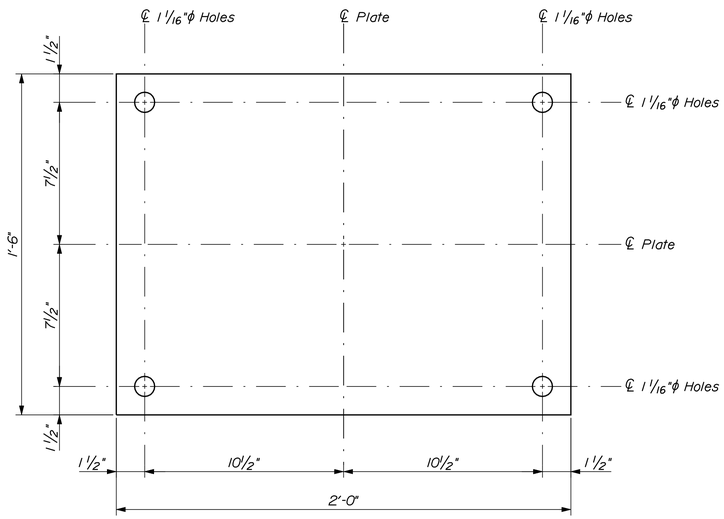

TEMPORARY BEARING PLATE

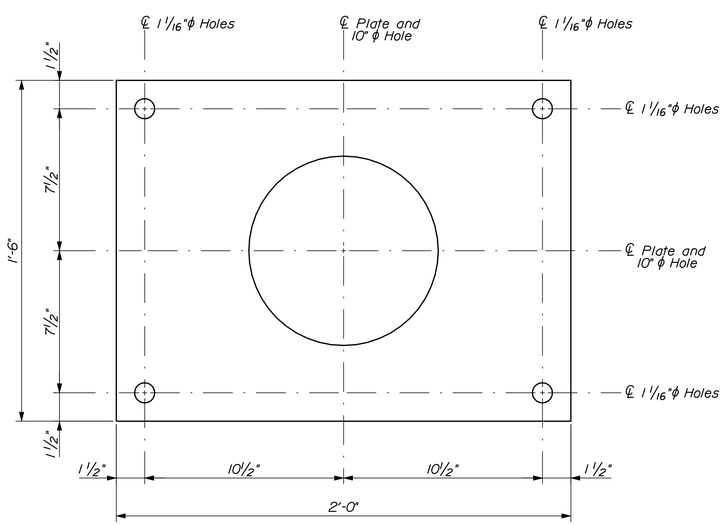

ANCHOR PLATE

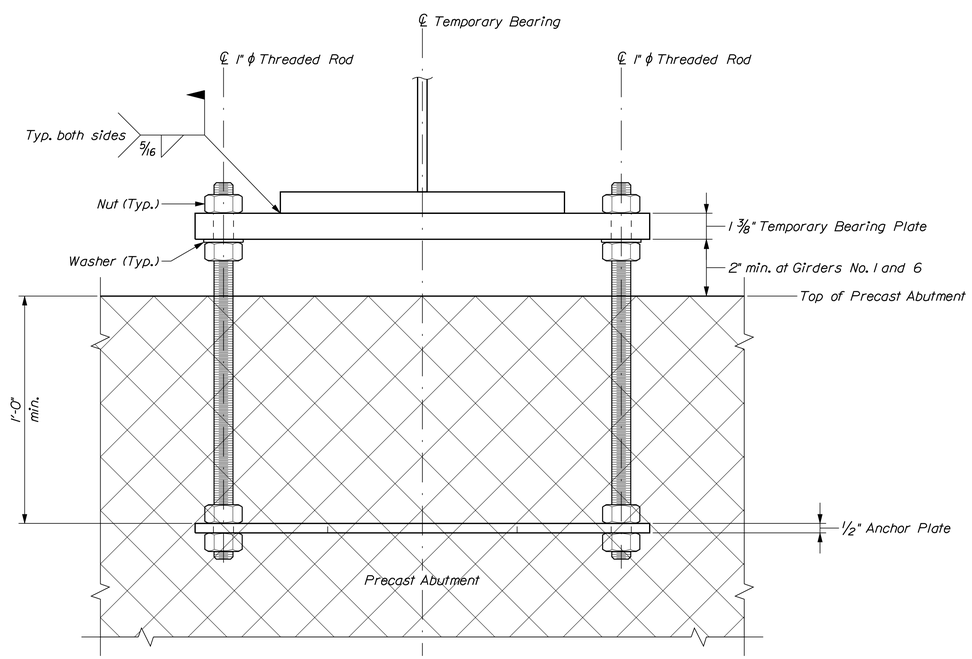

TEMPORARY BEARING ASSEMBLY

BEARING NOTES

1. Temporary bearing plates shall meet the requirements of ASTM A 710. Grade 50W. Anchor plates shall meet the requirements of ASTM A 36. Anchor rods shall meet the requirements of ASTM F 1554. Grade 105.

2. All bearings shall be marked prior to shipping. The marks shall include the bearing location on the bridge and a direction arrow that points upstation. All marks shall be permanent and shall be visible after the bearing is installed.

3. Bearing plates shall be covered during transit.

4. The bearing plates shall be incidental to Pay Item No. 504.702, Structural Steel Fabricated and Delivered.

5. Anchor plates shall be galvanized in accordance with Section 506. Anchor rods, washers, and nuts shall be galvanized to ASTM A 153 or ASTM B 695, Class 50, Type 1.

6. Girders shall not be welded to the bearing plates until all crossframes have been installed.

STATE OF MAINE
DEPARTMENT OF TRANSPORTATION

BH-1786(900)X

WIN 17869.00

BRIDGE NO. 3734

BRIDGE PLANS

PROJ. MANAGER	S. BOOGE	BY	DATE
DESIGN-DETAILED	M. WIGHT	D. SHAW	JUN 2011
CHECKED-REVIEWED	------	------	------
DESIGN2-DETAILED2	------	------	------
DESIGN3-DETAILED3	------	------	------
REVISIONS 1	------	------	------
REVISIONS 2	------	------	------
REVISIONS 3	------	------	------
REVISIONS 4	------	------	------
FIELD CHANGES	------	------	------

SIGNATURE

P.E. NUMBER

DATE

BOUNDARY BRIDGE
PRESTILE STREAM
BRIDGEWATER AROOSTOOK COUNTY

TEMPORARY BEARING

SHEET NUMBER

21

OF 29

Filename: ...\MSTA\021_Bearings_Incased.dgn Division: BRIDGE Username: ben.condon Date:3/22/2013

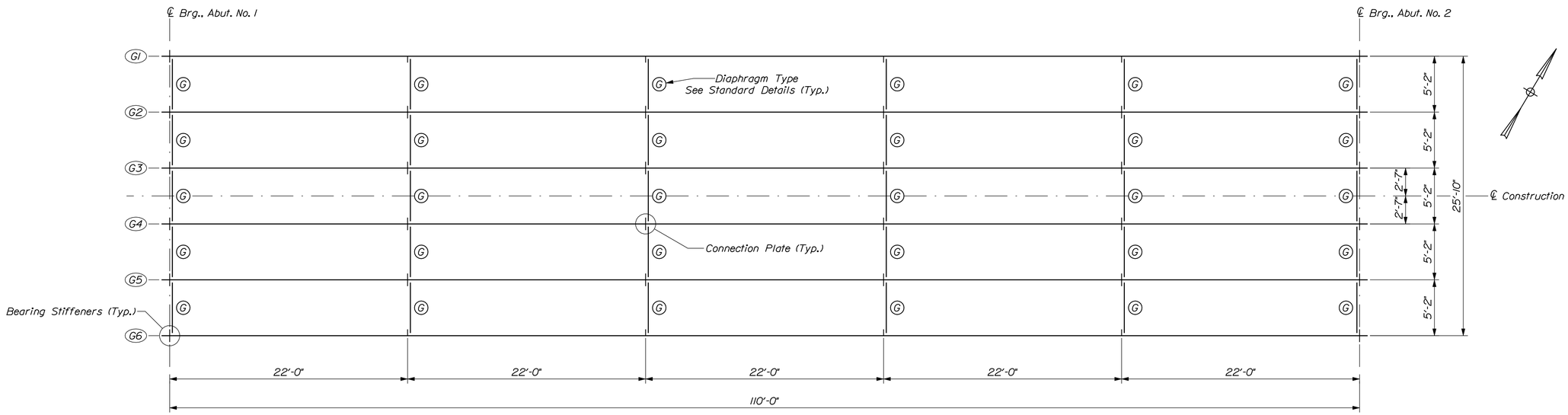

FRAMING PLAN

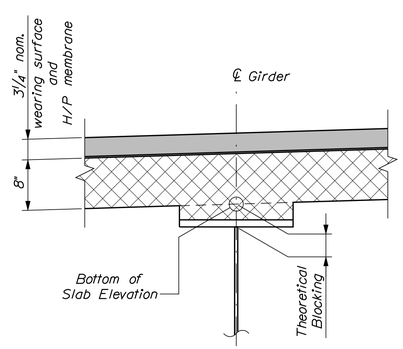

BLOCKING DETAIL

Theoretical blocking is 3⅝" at ℄ Brg., Abutments
(Do not use theoretical blocking to set forms)

BOTTOM OF SLAB ELEVATIONS (Feet)

Girder	℄ Brg., Abut. No. 1	·11'	·22'	·33'	·44'	·55'	·66'	·77'	·88'	·99'	℄ Brg., Abut. No. 2
G1	339.45	339.67	339.88	340.06	340.23	340.35	340.45	340.51	340.55	340.56	340.57
G2	339.60	339.82	340.03	340.22	340.38	340.51	340.61	340.67	340.70	340.72	340.72
G3	339.76	339.98	340.19	340.37	340.54	340.66	340.76	340.82	340.86	340.87	340.88
G4	339.76	339.98	340.19	340.37	340.54	340.66	340.76	340.82	340.86	340.87	340.88
G5	339.60	339.82	340.03	340.22	340.38	340.51	340.61	340.67	340.70	340.72	340.72
G6	339.45	339.67	339.88	340.06	340.23	340.35	340.45	340.51	340.55	340.56	340.57

STRUCTURAL STEEL NOTES

1. Camber ordinates, as shown, are computed to compensate for all dead load deflections and for the curvature of the finished grade profile.

2. No transverse butt weld splices will be allowed in the flange plates or web plates within 10 feet or 10 percent of the span length (whichever is greater) from the points of maximum moment. Butt weld splices in flanges shall be not less than three feet from transverse butt welds in the web plates and no transverse web or flange butt welds shall be located within three feet of other transverse welds (e.g. connection plates to web welds) on either flange or web.

3. Sections of flange plates or web plates between transverse shop splices or between a transverse shop splice and a field splice shall be not less than 20 feet in length unless otherwise shown on the plans.

4. Bearing stiffeners shall be plumb after erection and dead loading of the structure. Intermediate web stiffeners may be either plumb or normal to the top flange.

5. Crossframe or diaphragm connection plates may be either plumb or normal to the top flange.

6. The ends of the girders and the end diaphragms shall be coated with a zinc-rich coating system in accordance with Special Provision Section 506 to a distance of 10 feet from the face of the abutments.

STATE OF MAINE
DEPARTMENT OF TRANSPORTATION

BH-1786(900)X

WIN 17869.00

BRIDGE NO. 3734

BRIDGE PLANS

PROJ. MANAGER	S. BRIDGE	BY	DATE
DESIGN-DETAILED	M. WIGHT	D. SHAW	JUN 2011
CHECKED-REVIEWED	------	------	------
DESIGN2-DETAILED2	------	------	------
DESIGN3-DETAILED3	------	------	------
REVISIONS 1	------		------
REVISIONS 2	------		------
REVISIONS 3	------		------
REVISIONS 4	------		------
FIELD CHANGES	------		------

SIGNATURE

P.E. NUMBER

DATE

BOUNDARY BRIDGE
PRESTILE STREAM
BRIDGEWATER AROOSTOOK COUNTY

FRAMING PLAN

SHEET NUMBER

22

OF 29

Filename: ...\MSTA\022_Framing_Plan.dgn Division: BRIDGE Username: david.shaw Date:3/13/2013

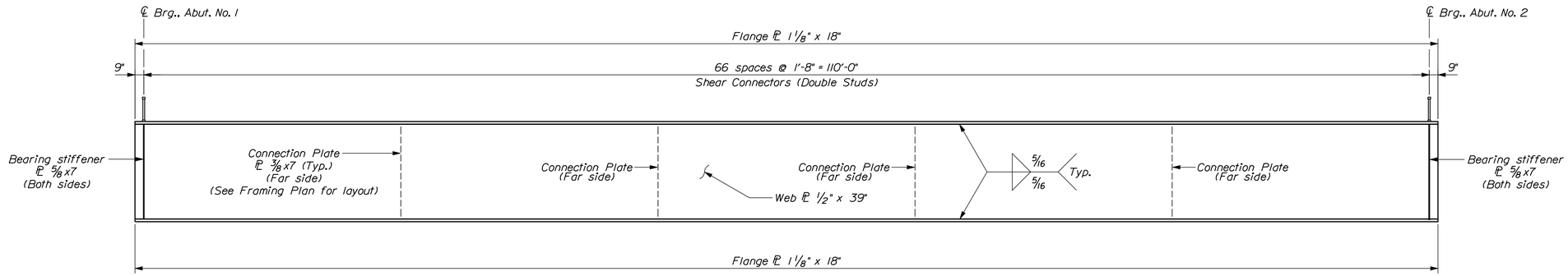

GIRDER ELEVATION

134 studs per girder x 6 girders = 804 studs
Girder No. 6 (Exterior Girder) shown
On Interior Girders connection plates are on both sides

TABLE OF DEFLECTIONS - EXTERIOR DECK UNIT											
	℄ Brg., Abut. No. 1	·11'	·22'	·33'	·44'	·55'	·66'	·77'	·88'	·99'	℄ Brg., Abut. No. 2
Steel Dead Load	0.00"	0.43"	0.80"	1.10"	1.29"	1.36"	1.29"	1.10"	0.80"	0.43"	0.00"
Fluid Dead Load	0.00"	0.94"	1.79"	2.44"	2.86"	3.01"	2.86"	2.44"	1.79"	0.94"	0.00"
Superimposed Dead Load	0.00"	0.37"	0.69"	0.96"	1.12"	1.18"	1.12"	0.96"	0.69"	0.37"	0.00"

TABLE OF DEFLECTIONS - INTERIOR DECK UNIT											
	℄ Brg., Abut. No. 1	·11'	·22'	·33'	·44'	·55'	·66'	·77'	·88'	·99'	℄ Brg., Abut. No. 2
Steel Dead Load	0.00"	0.43"	0.80"	1.10"	1.29"	1.36"	1.29"	1.10"	0.80"	0.43"	0.00"
Fluid Dead Load	0.00"	0.98"	1.85"	2.53"	2.96"	3.11"	2.96"	2.53"	1.85"	0.98"	0.00"
Superimposed Dead Load	0.00"	0.37"	0.69"	0.96"	1.12"	1.18"	1.12"	0.96"	0.69"	0.37"	0.00"

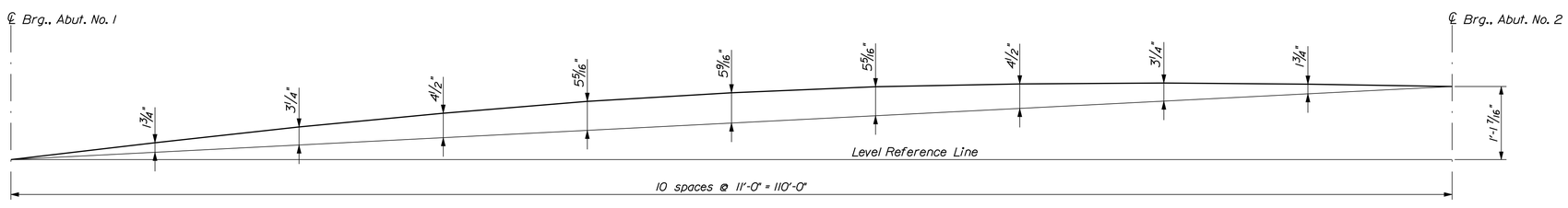

CAMBER DIAGRAM

STATE OF MAINE
DEPARTMENT OF TRANSPORTATION

BH-1786(900)X

WIN 17869.00

BRIDGE NO. 3734

BRIDGE PLANS

PROJ. MANAGER	S. BOOGE	BY	DATE
DESIGN-DETAILED	M. WIGHT	D. SHAW	JUN 2011
CHECKED-REVIEWED	------	------	------
DESIGN2-DETAILED2	------	------	------
DESIGN3-DETAILED3	------	------	------
REVISIONS 1	------	------	------
REVISIONS 2	------	------	------
REVISIONS 3	------	------	------
REVISIONS 4	------	------	------
FIELD CHANGES	------	------	------

SIGNATURE

P.E. NUMBER

DATE

BOUNDARY BRIDGE
PRESTILE STREAM
BRIDGEWATER AROOSTOOK COUNTY

GIRDER DETAILS

SHEET NUMBER
23
OF 29

Filename: ...\MSTA\023_Girder_Details.dgn Division: BRIDGE Username: david.shaw Date:3/14/2013

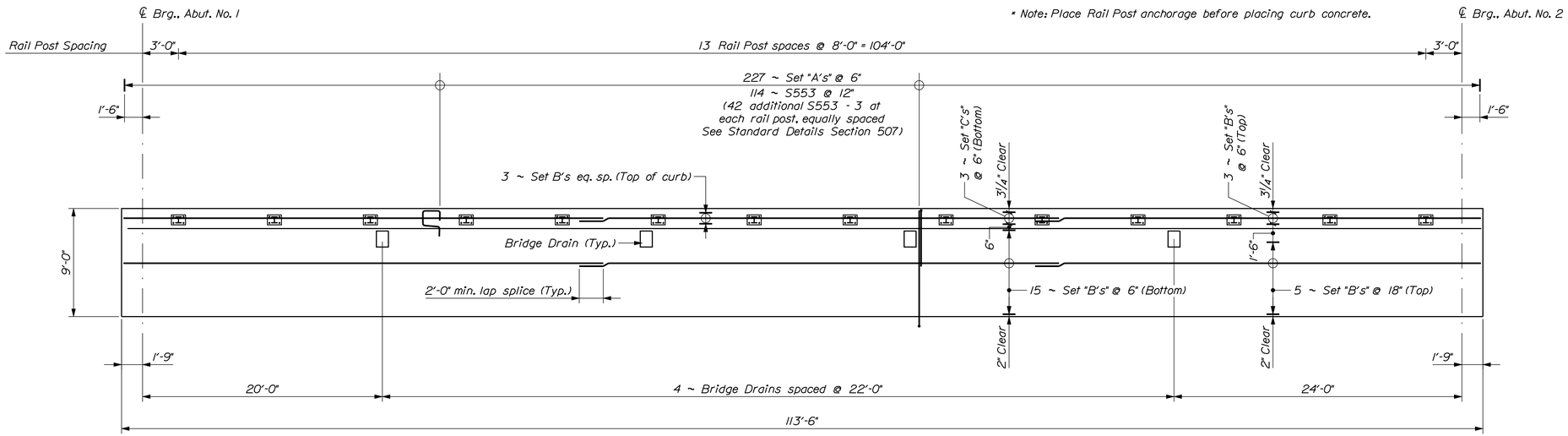

EXTERIOR DECK UNIT

North Exterior Deck Unit shown
(South Exterior Deck Unit opposite Hand)

Set "A" = 1 ~ S551, 1 ~ S552
Set "B" = 2 ~ S500, 1 ~ S501
Set "C" = 2 ~ S600, 1 ~ S601

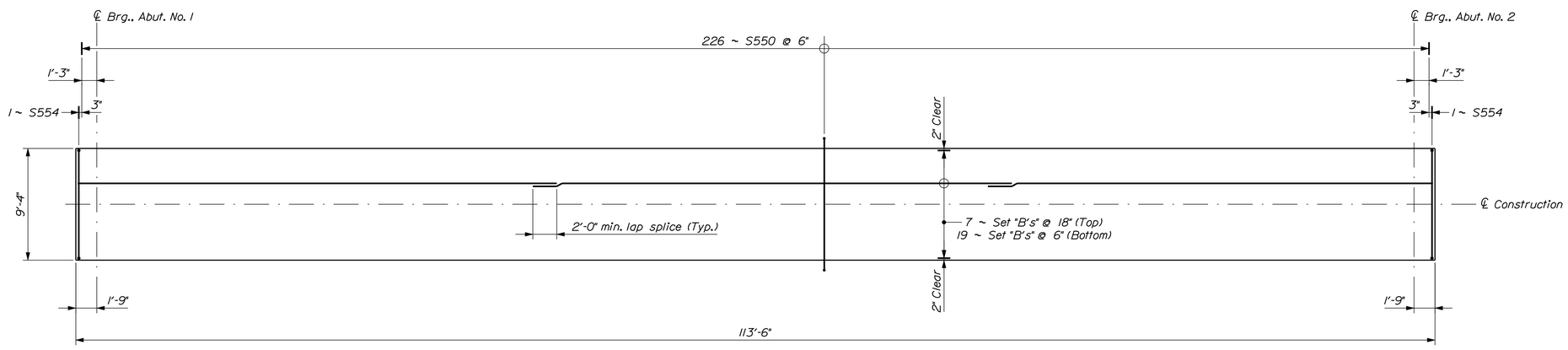

INTERIOR DECK UNIT

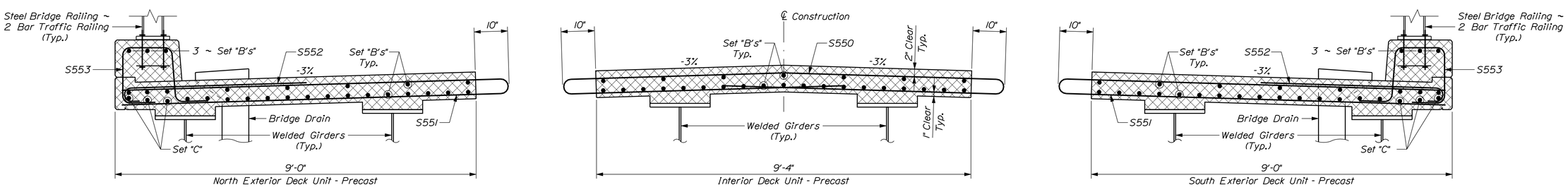

DECK UNIT LAYOUT

STATE OF MAINE
DEPARTMENT OF TRANSPORTATION

BH-1786(900)X

WIN 17869.00

BRIDGE NO. 3734

BRIDGE PLANS

PROJ. MANAGER	S. BODGE	BY	DATE
DESIGN-DETAILED	M. WIGHT	D. SHAW	JUN 2011
CHECKED-REVIEWED	-----	-----	-----
DESIGN2-DETAILED2	-----	-----	-----
DESIGN3-DETAILED3	-----	-----	-----
REVISIONS: 1	-----	-----	-----
REVISIONS: 2	-----	-----	-----
REVISIONS: 3	-----	-----	-----
REVISIONS: 4	-----	-----	-----
FIELD CHANGES	-----	-----	-----

SIGNATURE

P.E. NUMBER

DATE

BOUNDARY BRIDGE
PRESTILE STREAM
BRIDGEWATER AROOSTOOK COUNTY

PRECAST DECK UNITS

SHEET NUMBER

24

OF 29

Filename: ...\024_Precast_Deck_Units.dgn Division: BRIDGE Username: david.shaw Date:3/13/2013

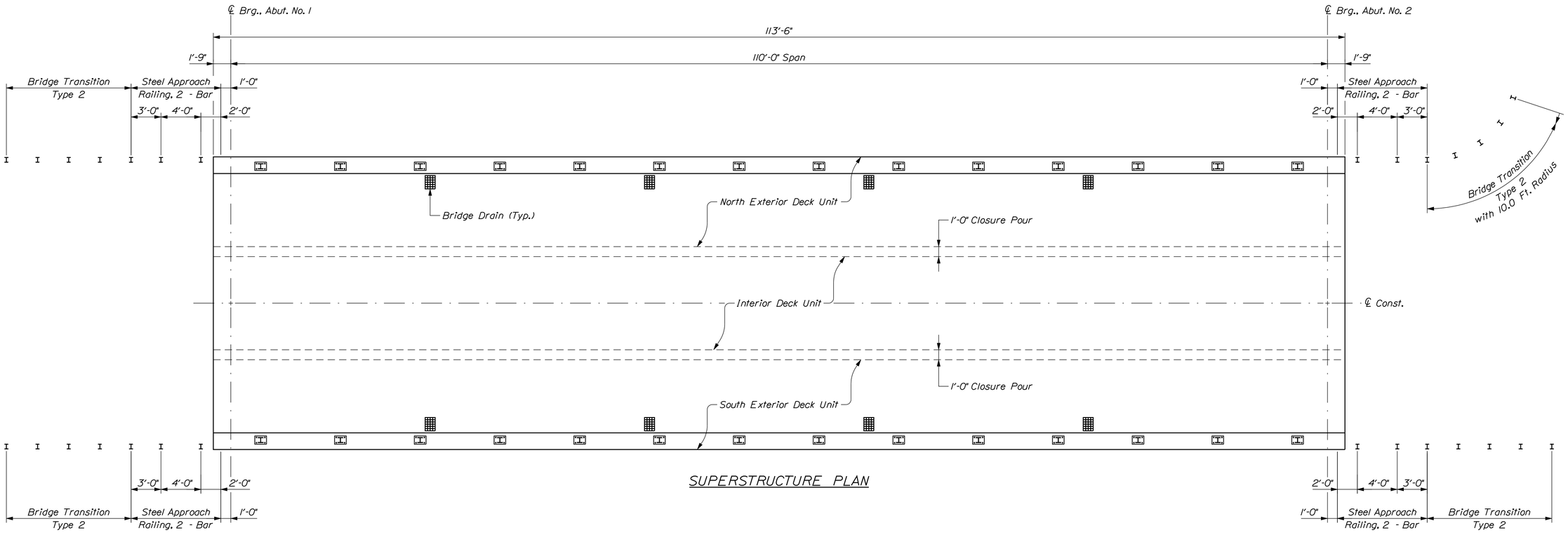

SUPERSTRUCTURE PLAN

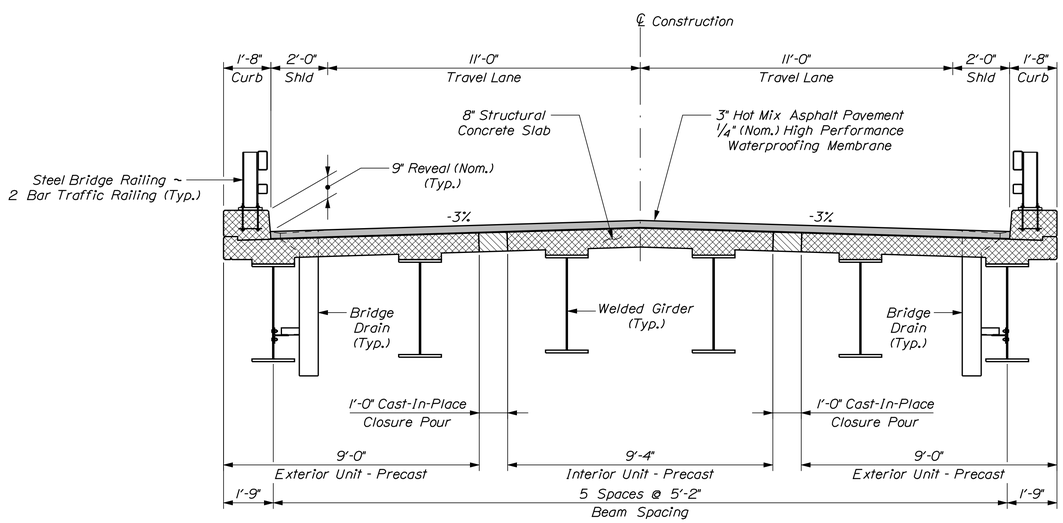

TYPICAL BRIDGE SECTION

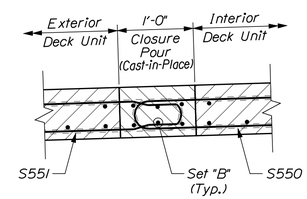

CAST-IN-PLACE CLOSURE POUR DETAIL

SUPERSTRUCTURE NOTES

1. The theoretical blocking used for design of the structure is 3 5/8" at the centerline of bearing of the abutments and piers. Refer to Standard Detail 502(02) for blocking details.

2. Reinforcing steel shall have a minimum concrete cover of 2 inches unless otherwise noted.

3. Adjust reinforcing steel to fit around the bridge drains in a manner approved by the Resident or Inspector. Do not cut transverse reinforcing bars.

4. Form a one inch V-groove on the fascias at the horizontal joint between the curb and slab.

5. The superstructure slab concrete for each span shall be placed continuously and shall be kept plastic until the entire placement has been made.

6. The formwork and its supports, over the full width of the structural slab, shall remain in place until the requirements for form removal of Special Provision Section 502, Structural Concrete, may proceed.

7. Payment for reinforcing steel fabricated, delivered, and placed in the cast-in-place portion of the structural concrete slab will be considered incidental to the appropriate Standard Specifications Section 502 pay item.

8. The Contractor shall have the option to omit the last 2' or place PVC Voids in the Precast Bridge Units to enable placement of the end diaphragm.

9. The approximate pick weight of the Interior and Exterior Precast Deck Units are 74 and 86 tons respectively.

10. The Contractor shall have the option to use the Concrete Transition Barrier in place of the Steel Approach Railing shown.

STATE OF MAINE
DEPARTMENT OF TRANSPORTATION

BH-1786(900)X

WIN 17869.00

BRIDGE NO. 3734

BRIDGE PLANS

PROJ. MANAGER	S. BOOGE	BY	DATE
DESIGN-DETAILED	M. WIGHT	D. SHAW	JUN 2011
CHECKED-REVIEWED	-----	-----	-----
DESIGN2-DETAILED2	-----	-----	-----
DESIGN3-DETAILED3	-----	-----	-----
REVISIONS 1	-----	-----	-----
REVISIONS 2	-----	-----	-----
REVISIONS 3	-----	-----	-----
REVISIONS 4	-----	-----	-----
FIELD CHANGES	-----	-----	-----

SIGNATURE

P.E. NUMBER

DATE

BOUNDARY BRIDGE
PRESTILE STREAM
BRIDGEWATER AROOSTOOK COUNTY

SUPERSTRUCTURE

SHEET NUMBER

25

OF 29

Filename: ...\MSTA\025_Superstructure.dgn Division: BRIDGE Username: david.shaw Date:3/14/2013

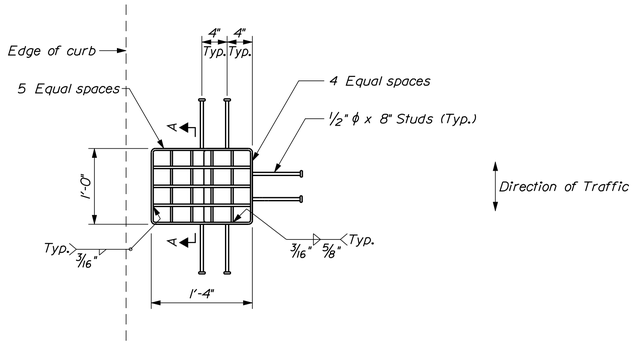

PLAN

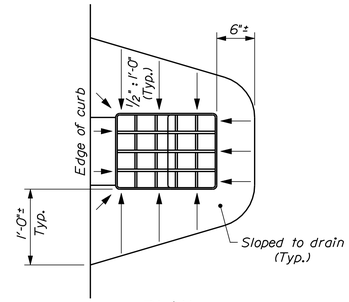

PLAN
Pavement depression around bridge drains

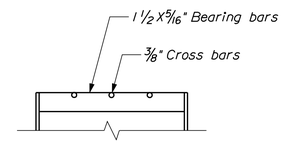

SECTION A-A

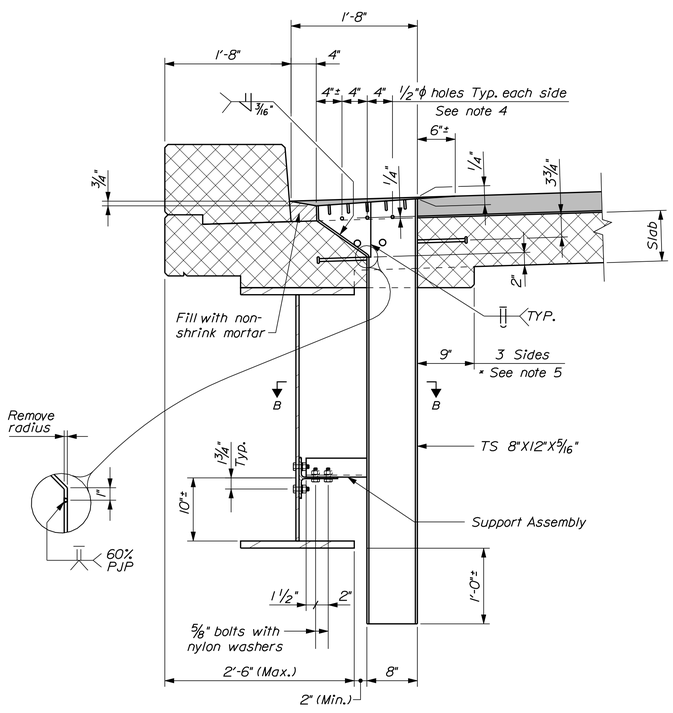

SECTION

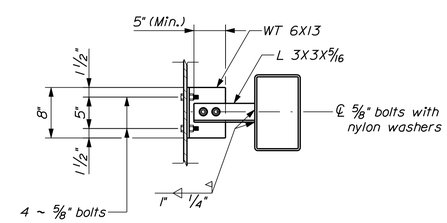

SECTION B-B

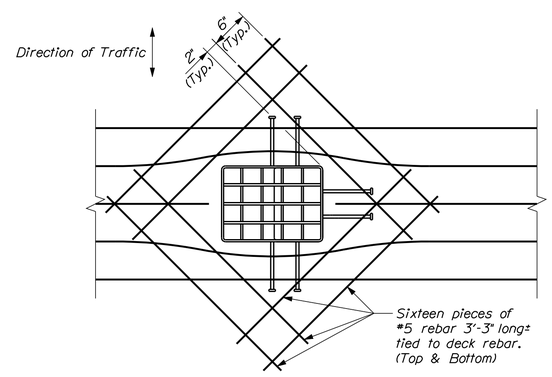

PLAN
Reinforcement around bridge drain

NOTES:

1. All plates, if any, shall be 5/16" thick and shall conform to ASTM A 36.
2. The downspout shall conform to ASTM A500.
3. Grating shall be a commercial heavy - duty grating with 1 1/2"x5/16" bearing bars and 3/8" ϕ cross bars.
4. The 1/2" ϕ holes are not required when a concrete wearing surface is specified.
5. If the minimum thickness of concrete below the drain is 2" or less, the concrete haunch shall be extended as shown.
6. Shear connectors welded to top flange of beam may need to be bent out of the way should an interference with the bridge drain occur.
7. Drains and L 3"x3"x5/16" shall be blast cleaned to the requirements of SSPC-SP6/NACE 3 and hot-dipped galvanized in accordance with ASTM A 123. Steel beam attachment: WT 6 x 13 and associated fasteners shall meet the same material specification and protective coating as the structural steel or ASTM A709 Gr. 50W.
8. Payment for bridge drains will be as specified under Subsection 502.19 of the Standard Specifications.
9. The additional reinforcing steel around each bridge drain will not be paid for directly. Payment will be considered incidental to related contract items.

STATE OF MAINE
DEPARTMENT OF TRANSPORTATION

BH-1786(900)X

WIN 17869.00

BRIDGE NO. 3734

BRIDGE PLANS

PROJ. MANAGER	S. BODGE	BY	DATE
DESIGN-DETAILED	M. WIGHT	D. SHAW	JUN 2011
CHECKED-REVIEWED	-----	-----	-----
DESIGN2-DETAILED2	-----	-----	-----
DESIGN3-DETAILED3	-----	-----	-----
REVISIONS 1	-----	-----	-----
REVISIONS 2	-----	-----	-----
REVISIONS 3	-----	-----	-----
REVISIONS 4	-----	-----	-----
FIELD CHANGES	-----	-----	-----

SIGNATURE

P.E. NUMBER

DATE

BOUNDARY BRIDGE
PRESTILE STREAM
BRIDGEWATER AROOSTOOK COUNTY

BRIDGE DRAIN DETAILS

SHEET NUMBER
26
OF 29

Filename: ...\026_Bridge_Drain_Details.dgn Division: BRIDGE Username: david.shaw Date:3/13/2013

STRAIGHT BARS

MARK	QTY.	LENGTH	LOCATION	MARK	QTY.	LENGTH	LOCATION
			Abutment - End Diaphragm				
B500	12	8'-8 1/2"	Abutment - Closure Pour				
B501	4	6'-6"	Abutment - Closure Pour				
B502	4	2'-10"	Abutment - Closure Pour				
B503	40	4'-9"	Abutment - Closure Pour				
B504	12	2'-0"	Abutment - Closure Pour				
B505	30	3'-7"	Abutment - Closure Pour				
B600	16	22'-10"	Abutment - Closure Pour				
B601	4	21'-4"	Abutment - Closure Pour				
B602	4	20'-0"	Abutment - Closure Pour				
B603	4	2'-10"	Abutment - Closure Pour				
B604	4	1'-6"	Abutment - Closure Pour				
			Deck - Closure Pour				
S500	24	40'-0"	Between Deck Units				
S501	12	37'-2"	Between Deck Units				

MARK	QTY.	LENGTH	LOCATION	MARK	QTY.	LENGTH	LOCATION

BENT BARS

MARK	QTY.	LENGTH	TYPE	A	B	C	D	E	F	G	H	O	R	LOCATION
						Abutment - End Diaphragm								
B550	8	7'-5 5/8"	U	2'-2 1/2"	3'-0 5/8"	2'-2 1/2"								Abutment - Closure Pour
B551	8	9'-5 5/8"	U	3'-2 1/2"	3'-0 5/8"	3'-2 1/2"								Abutment - Closure Pour
B552	8	11'-5 5/8"	U	4'-2 1/2"	3'-0 5/8"	4'-2 1/2"								Abutment - Closure Pour
B553	8	12'-11 5/8"	U	4'-5 1/2"	3'-0 5/8"	4'-5 1/2"								
B554	36	10'-4 5/8"	U	3'-8"	3'-0 5/8"	3'-8"								Abutment - Closure Pour
B555	24	9'-4 5/8"	U	3'-5"	3'-0 5/8"	2'-11"								Abutment - Closure Pour
B556	12	7'-7 1/2"	V				1'-1 1/2"	6'-6"			2'-11 1/4"			Abutment - Closure Pour
B557	12	7'-8"	U	2'-3"	3'-2"	2'-3"								Abutment - Closure Pour

MARK	QTY.	LENGTH	TYPE	A	B	C	D	E	F	G	H	O	R	LOCATION

TYPE - BENDING DIAGRAMS

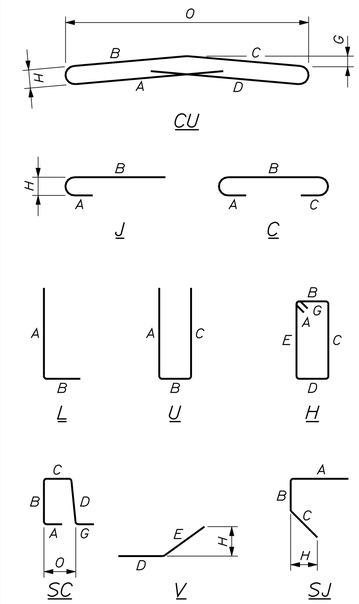

All dimensions are out-to-out of bar.

Bending details and hooks shall conform to the recommendations of the current revision of ACI Standard 315 and ACI Standard 318.

Reinforcing Bar: ASTM A 615/A 615M, Grade 60

GENERAL NOTES

1. The first two digits following the letter(s) of the mark indicate the size of the bar:

   Mark "A502" = bar size #5
   Mark "P805" = bar size #8
   Mark "S650" = bar size #6

2. Each crank bar, Type B, may be replaced by two (2) straight bars (one top and one bottom) of the same bar size as the crank bar. Payment in either case will be based on crank bars as scheduled on the plans.

STATE OF MAINE
DEPARTMENT OF TRANSPORTATION

BH-1786(900)X

WIN 17869.00

BRIDGE PLANS

BRIDGE NO. 3734

	BY	DATE
PROJ. MANAGER	S. BODGE	
DESIGN-DETAILED	M. WIGHT	JUN 2011
CHECKED-REVIEWED	-----	-----
DESIGN2-DETAILED2	-----	-----
DESIGN3-DETAILED3	-----	-----
REVISIONS 1	-----	-----
REVISIONS 2	-----	-----
REVISIONS 3	-----	-----
REVISIONS 4	-----	-----
FIELD CHANGES	-----	-----

SIGNATURE

P.E. NUMBER

DATE

BRIDGEWATER BOUNDARY BRIDGE
PRESTILE STREAM
AROOSTOOK COUNTY

REINFORCING STEEL SCHEDULE

SHEET NUMBER

27

OF 29

Filename: ...\MSTA\027_Rebar_Schedule.dgn Division: BRIDGE Username: david.shaw Date:3/13/2013

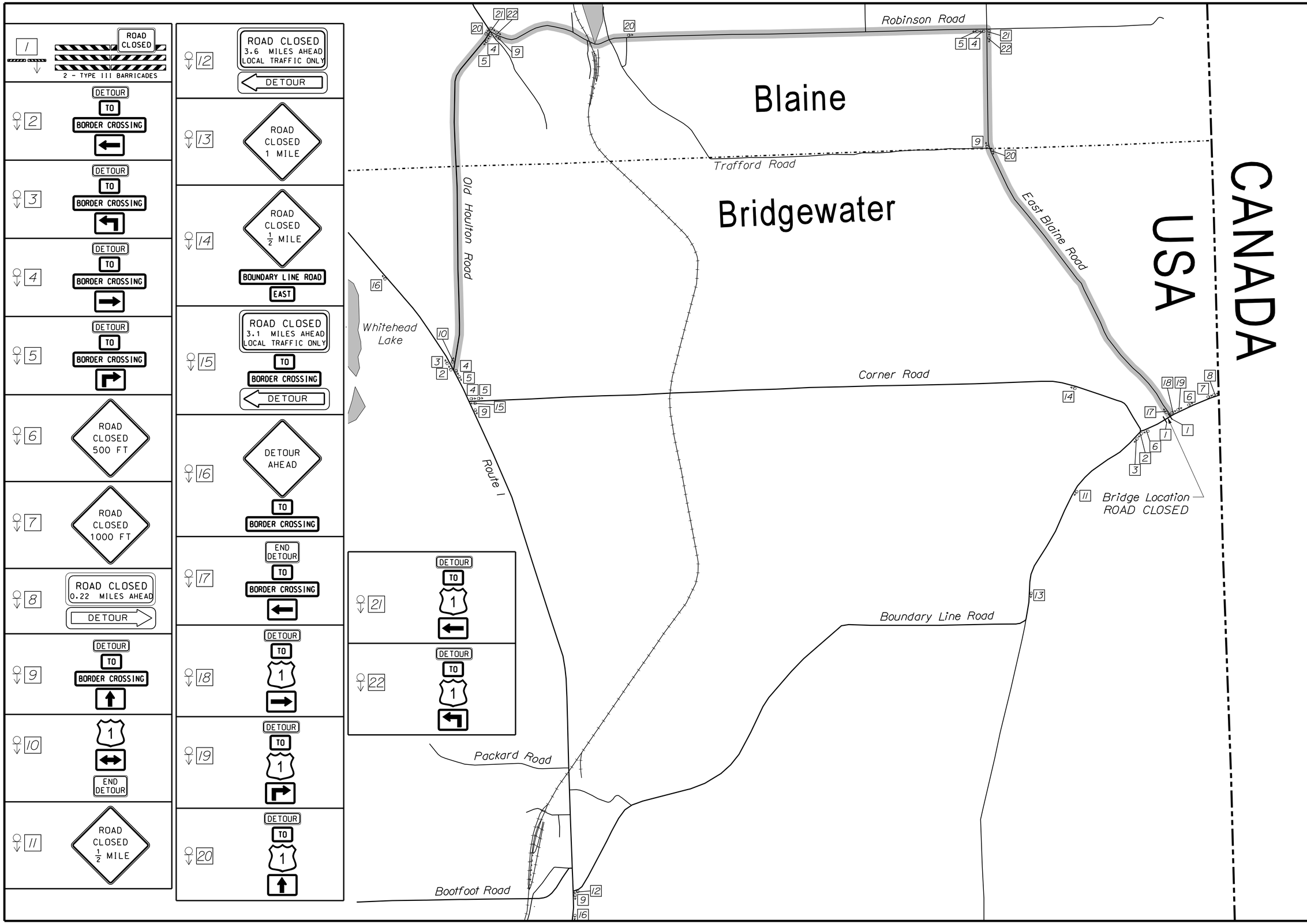

STATE OF MAINE
DEPARTMENT OF TRANSPORTATION

BH-1786(900)X

WIN 17869.00

BRIDGE NO. 3734

BRIDGE PLANS

		BY	DATE
PROJ. MANAGER	S. BOOGE		
DESIGN-DETAILED	M. WIGHT	D. SHAW	JUN 2011
CHECKED-REVIEWED	------	------	------
DESIGN2-DETAILED2	------	------	------
DESIGN3-DETAILED3	------	------	------
REVISIONS 1	------	------	------
REVISIONS 2	------	------	------
REVISIONS 3	------	------	------
REVISIONS 4	------	------	------
FIELD CHANGES	------	------	------

SIGNATURE

P.E. NUMBER

DATE

BOUNDARY BRIDGE
PRESTILE STREAM
BRIDGEWATER AROOSTOOK COUNTY

TRAFFIC CONTROL PLAN

SHEET NUMBER

28

OF 29

Filename: ...\028_Traffic_Control_Plan.dgn Division: BRIDGE Username: david.shaw Date:3/13/2013

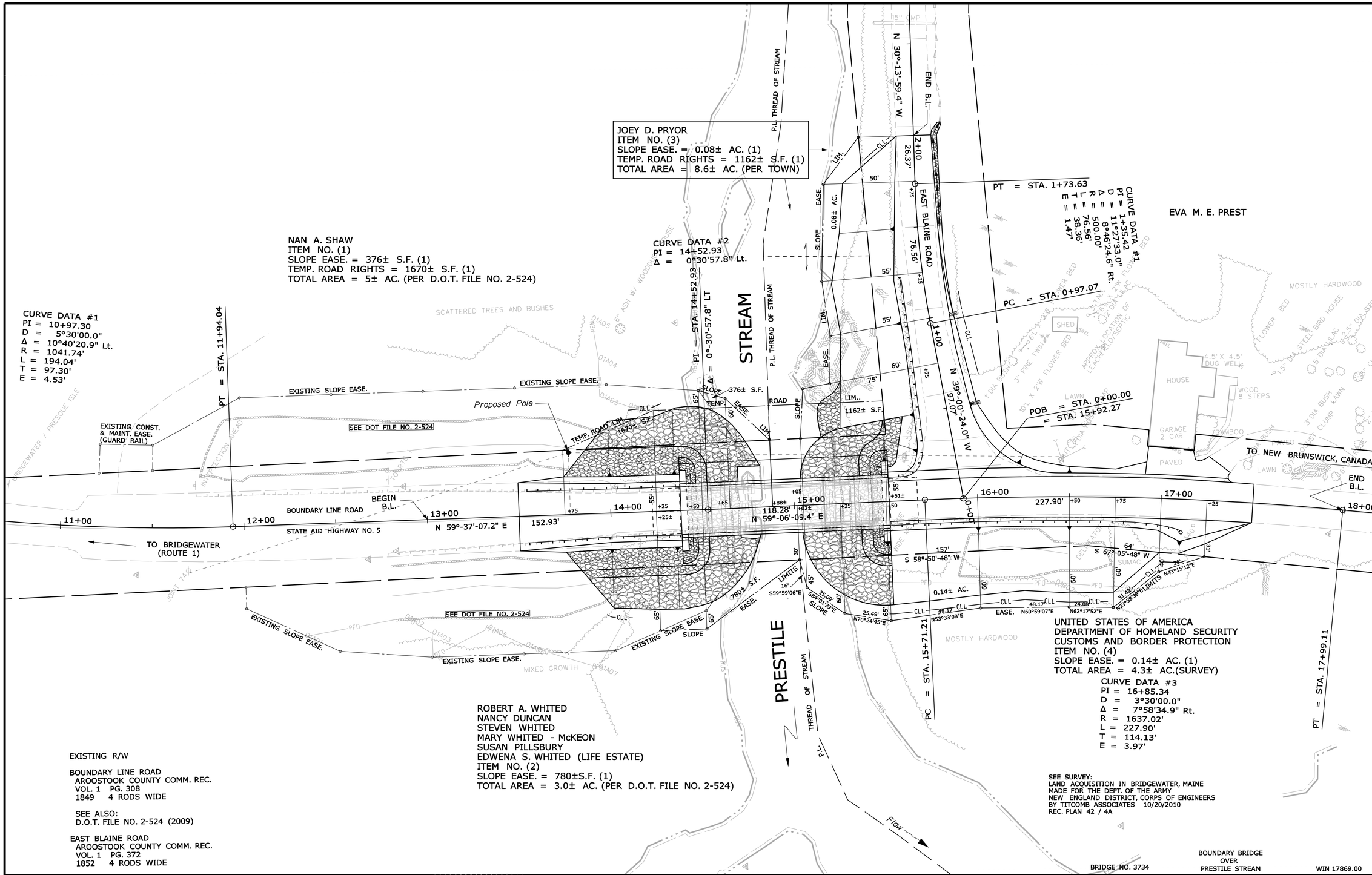

THIS PLAN WAS PREPARED IN CONNECTION WITH THE DEPARTMENT'S ACQUISITION OF REAL PROPERTY FOR TRANSPORTATION PURPOSES. IT CANNOT BE USED TO ESTABLISH LEGAL BOUNDARIES BETWEEN ABUTTING PROPERTY OWNERS.

SYMBOLS

- ● IP or ⊕ P/P (IRON PIPE or PIN FOUND)
- ☐ S.T. (SEPTIC TANK)
- ⊠ (ROW MONUMENT)
- ⚓BM (TRAVERSE POINT)
- ○ (WELL)
- GRADING LIMIT LINE
- CONSTRUCTION LIMIT LINE
- PROPERTY LINE
- PL
- LIMITS OF "RIGHT OF WAY" PORTION (L.O.W.P.)
- NEW RIGHT OF WAY
- NEW ROW WITHIN EXIST. ROW
- CONTROL OF ACCESS
- WL WATER LINE
- GL GAS LINE
- EL ELECTRIC LINE
- TL TELEPHONE LINE
- SEWER LINE

ITEM	CHECKED	TECH
BASE MAP		
EXIST. R/W		
PROP. LINES		
AREAS		D.S.G.

STATE OF MAINE
DEPARTMENT OF TRANSPORTATION
16 STATE HOUSE STATION - AUGUSTA, ME 04333-0016
BRIDGEWATER
RIGHT OF WAY MAP

REVISIONS			
NO.	DATE	DESCRIPTION	BY

PLAN FILED IN PLAN BOOK		PAGE	COUNTY RECORD			
NO.	GRANTOR	INSTRUMENT	DATE	BOOK	PAGE
		COND.	2/19/13	5153	286

DAVID BERNHARDT
COMMISSIONER
KENNETH L. SWEENEY
CHIEF ENGINEER

DATE

STATE OF MAINE
PETER A. BELANGER
1341
PROFESSIONAL LAND SURVEYOR

STATE AID HIGHWAY NO. 5
BOUNDARY LINE ROAD
BRIDGEWATER AROOSTOOK COUNTY
FEDERAL AID PROJECT NO. BH-1786(900)

DECEMBER 2012 | RIGHT-OF-WAY MAP
SCALE 1" = 25' | SHEET 1 OF 1

D.O.T. FILE NO. 2-550

SHEET NUMBER
29
OF 29

Filename: ...\00\ROW\MSTA\001_RWPLAN1.dgn Division: BRIDGE Username: david.show Date:3/14/2013