STATE OF MAINE
DEPARTMENT OF TRANSPORTATION

SPECIFICATIONS

Design: "American Railway Engineering and Maintenance of Way Association"
AREMA 2012 Manual for Railway Engineering

DESIGN LOADING

Live Load ..... Cooper E-80

MATERIALS

Concrete:
(unless noted otherwise) ..... Class "A"
Reinforcing Steel ..... ASTM A 615/A 615M, Grade 60
Structural Steel:
All Material (except as noted) ..... ASTM A 709/A 709M, Grade 50W
High Strength Bolts ..... ASTM A325, Type 3

BASIC DESIGN STRESSES

Concrete:
Class "A" ..... f 'c = 4,350 psi
Reinforcing Steel ..... f y = 60,000 psi
Structural Steel:
ASTM A 709/709M, Grade 50W ..... F y = 50,000 psi
ASTM A 325 ..... Fμ = 120,000 psi

WINDHAM
CUMBERLAND COUNTY
MOUNTAIN DIVISION RAILROAD
OVER
MALLISON FALLS ROAD
PROJECT LENGTH 0.06 mi.
BRIDGE SUPERSTRUCTURE REPLACEMENT
BRIDGE NO. 0359

INDEX OF SHEETS

SHEET NO.	DESCRIPTION
1	Title Sheet
2	Quantities and Notes
3-4	General Plans
5-6	Profiles
7	Typical Approach Sections & Details
8-13	Cross Sections
14	Plan and Elevation
15	Demolition Plan
16	Abutment No. 1 Details
17	Abutment No. 2 Details
18	Miscellaneous Abutment Details
19	Abutment Reinforcing
20	Approach Slab Details
21	Typical Bridge Section
22	Framing Plan and Girder Elevation
23	Superstructure Details
24	Bearing Details
25	Deck Details
26	Reinforcing Steel Schedule
27	Traffic Control Plan

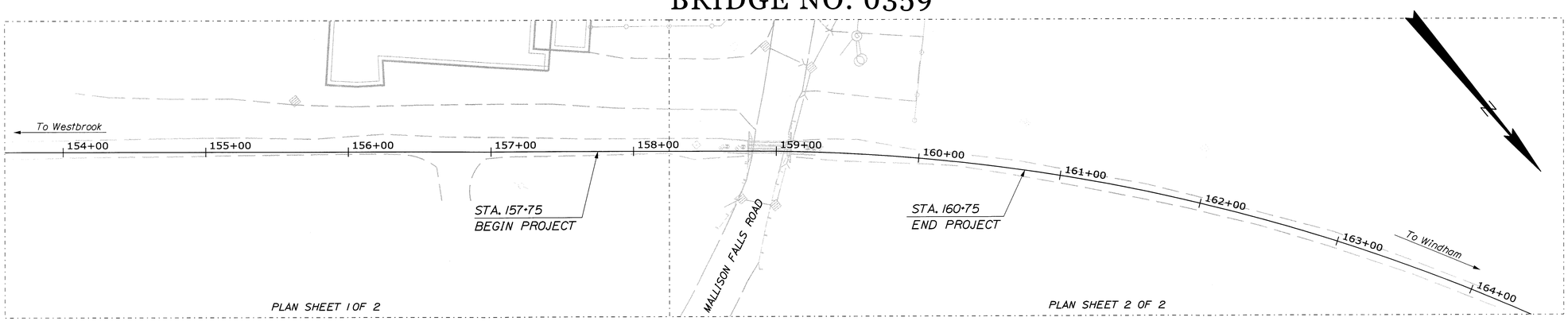

LAYOUT SCALE

40 0 40 80
Scale of Feet

PROJECT LOCATION:	0.05 miles East along Mallison Falls Rd. from Mallison Street (0.25 miles NE of Rt. 4/202)
PROGRAM AREA:	Multimodal Program
OUTLINE OF WORK:	BRIDGE SUPERSTRUCTURE REPLACEMENT AND ABUTMENT REHABILITATION

WIN 17860.03

STATE OF MAINE
DEPARTMENT OF TRANSPORTATION
APPROVED — DATE
COMMISSIONER: — 4/22/13
CHIEF ENGINEER: — 4/22/13

STATE OF MAINE GREGORY GOODRICH No. 13225 LICENSED PROFESSIONAL ENGINEER

PROJECT INFORMATION		SIGNATURE	
PROGRAM	MULTIMODAL PROGRAM		
PROJECT MANAGER	J. KITTREDGE	P.E. NUMBER	
DESIGNER	G. GOODRICH	13225	
CONSULTANT	VHB		
PROJECT RESIDENT			
CONTRACTOR			
PROJECT COMPLETION DATE		DATE	APRIL 5, 2013

WINDHAM
MALLISON FALLS RAILROAD BRIDGE

TITLE SHEET

SHEET NUMBER
1
OF 27

Filename: \cad\st\planset\001_Title.dgn Division: Structures Username: bmasse Date: 4/5/2013

ESTIMATED QUANTITIES			
ITEM NO.	DESCRIPTION	QUANTITY	UNIT
202.19	Removing Existing Bridge	1	LS
203.20	Common Excavation	475	CY
206.082	Structural Earth Excavation - Major Structures	100	CY
304.09	Aggregate Base Course-Crushed	165	CY
304.10	Aggregate Subbase Course-Gravel	800	CY
502.21	Structural Concrete, Abutments and Retaining Walls	40	CY
502.45	Structural Concrete, Approach Slab	27	CY
503.12	Reinforcing Steel, Fabricated and Delivered	13128	LB
503.13	Reinforcing Steel, Placing	13128	LB
504.70	Structural Steel Fabricated and Delivered (38,428 LBS) (38,428 LBS)	1	LS
504.71	Structural Steel Erection (38,428 LBS) (38,428 LBS)	1	LS
523.52	Bearing Installation	2	EA
523.5403	Plain Elastomeric Bearings	2	EA
528.4903	Bridge Ties and Timbers (Railroad Bridge)	1	LS
607.21	Chainlink Fence - 5 Feet	73	LF
607.2317	Chainlink Fence Gate 5'x4' Opening	2	EA
613.40	Turf Reinforcement Mat - (TRM)	450	SY
615.07	Loam	80	CY
615.081	Loam Compost Blanket Layer	40	CY
618.1401	Seeding Method #2, Plan Quantity	6	UNIT
618.146	Special Seeding HGM Hydro-Growth Medium	4	UNIT
618.15	Temporary Seeding	16	LB
619.12	Mulch	6	UNIT
620.54	Stabilization/Reinforcement Geotextile	3100	SY
620.60	Separation Geotextile	725	SY
629.05	Hand Labor - Straight Time	20	HR
631.12	All Purpose Excavator (Including Operator)	8	HR
631.172	Truck - Large (Including Operator)	8	HR
631.22	Front End Loader (Including Operator)	8	HR
639.18	Field Office, Type A	1	EA
652.312	Type III Barricade	6	EA
652.33	Drum	10	EA
652.34	Cone	15	EA
652.35	Construction Signs	300	SF
652.361	Maintenance of Traffic Control Devices	1	LS
652.38	Flaggers	40	HR
656.75	Temporary Soil Erosion and Water Pollution Control	1	LS
659.10	Mobilization	1	LS

GENERAL CONSTRUCTION NOTES

1. During construction, the road will be closed to traffic for a time period specified in the Special Provisions.

2. The clearing limits as shown on the plans are approximate. The exact limits will be established in the field by the Resident. Payment for clearing will be considered incidental to Contract items.

3. All slopes requiring Turf Reinforcement Mat (TRM) shall include a 3" layer of Loam Composite Blanket and Special Seeding HGM Hydro-Growth Medium as the seeding method. All other new or reconstructed sideslopes will require placing 3" loam and seeding method #2.

4. Erosion Control Mix may be substituted in those areas normally receiving loam and seed as directed by the Resident. Placement shall be in accordance with Standard Specifications Section 619, Mulch. Payment will be made under Item No. 619.1401, Erosion Control Mix.

5. A copy of the project geotechnical report: Geotechnical Evaluation Report, File No. 09.0025701.00, Dated March 2012, can be found in the Contract Book.

6. Geotechnical information referred to in this plan set is for the use of the Bidders and the Contractor. No assurance is given that the information or interpretations will be representative of actual subsurface conditions at the construction site. MaineDOT will not be responsible for the Bidders' or Contractor's interpretations of, or conclusions drawn from, the geotechnical information. The boring logs in the Contract book present factual and interpretive subsurface information collected at discrete locations. Data provided may not be representative of the subsurface conditions between the boring locations.

7. Quantities included for pay items measured and paid for by Lump Sum are estimated quantities and are provided by MaineDOT for informational purposes only. Lump Sum pay items will be paid for at the Contract Bid amount, with no addition or reduction in payment to the Contractor if the actual final quantities are different from the MaineDOT provided estimated quantities, except as follows:

a. If a Lump Sum pay item is eliminated, the requirements of Standard Specifications Section 109.2, Elimination of Items, will take precedence.

b. If other Contract Documents specifically allow a change in payment for a Lump Sum pay item, those requirements will be followed.

c. If a design change results in changes to estimated quantities for Lump Sum pay items, price adjustments will be made in accordance with Standard Specifications Section 109.7, Equitable Adjustments to Compensation.

8. The Contractor shall submit a Bridge Demolition Plan to the Resident at least 10 business days prior to the start of demolition work. The plan shall outline the methods and equipment to be used to remove and dispose of all materials included in the existing bridge. No work related to the removal of the bridge shall be undertaken by the Contractor until MaineDOT has reviewed the Bridge Demolition Plan for appropriateness and completeness. Payment for all work necessary for developing, submitting and finalizing the Demolition Plan will be considered incidental to the bridge removal pay item.

9. The existing bridge shall be removed by and become the property of the Contractor. The steel portions of the existing bridge are coated with a lead-based paint system. The Contractor is responsible for the containment, proper management and disposal of all lead-contaminated hazardous waste generated by the process of demolishing the bridge. The Contractor is responsible for implementing appropriate OSHA mandated personal protection standards related to this process. Once the existing bridge is removed, the Contractor is solely responsible for the care, custody and control of the components of the existing bridge and any hazardous waste generated as a result of the storage, recycling or disposal of the bridge components, including lead-coated steel. The Contractor shall recycle or reuse the steel in accordance with the Maine Department of Environmental Protection's "Maine Hazardous Waste Management Regulations," Chapter 850. A copy of this regulation is available at MaineDOT's offices on Child Street in Augusta. Payment for all labor, materials, equipment and other costs required to remove and dispose of the existing bridge will be considered incidental to the bridge removal pay item.

10. Removing Existing Bridge shall include the following:
Superstructure (including timber decking, timber ties, timber nailers, steel stringers, bearings, and timber railing)
Cast-in-place concrete seat and wingwalls
Timber retaining walls in their entirety

11. Concrete for wingwalls is included in Item 502.21, Structural Concrete, Abutments and Retaining Walls.

STATE OF MAINE
DEPARTMENT OF TRANSPORTATION

-

WIN 17860.03

BRIDGE PLANS

BRIDGE NO. 0359

STATE OF MAINE GREGORY S. GOODRICH No. 13225 LICENSED PROFESSIONAL ENGINEER

PROJ. MANAGER	C. BAKER	BY	DATE
DESIGN-DETAILED	LSC	CLC	4\29\13
CHECKED-REVIEWED	GSG	CDB	5/7/13
DESIGN2-DETAILED2	---	---	---
DESIGN3-DETAILED3	---	---	---
REVISIONS 1	---	---	---
REVISIONS 2	---	---	---
REVISIONS 3	---	---	---
REVISIONS 4	---	---	---
FIELD CHANGES	---	---	---

SIGNATURE 13225

P.E. NUMBER

MAY 10, 2013

DATE

MOUNTAIN DIVISION RAILROAD
MALLISON FALLS ROAD
WINDHAM CUMBERLAND COUNTY

QUANTITIES AND NOTES

SHEET NUMBER
2
OF 27

Filename: ...\st\planset\002_Estimate_01.dgn Division: Structures Username: kpreston Date:5/10/2013

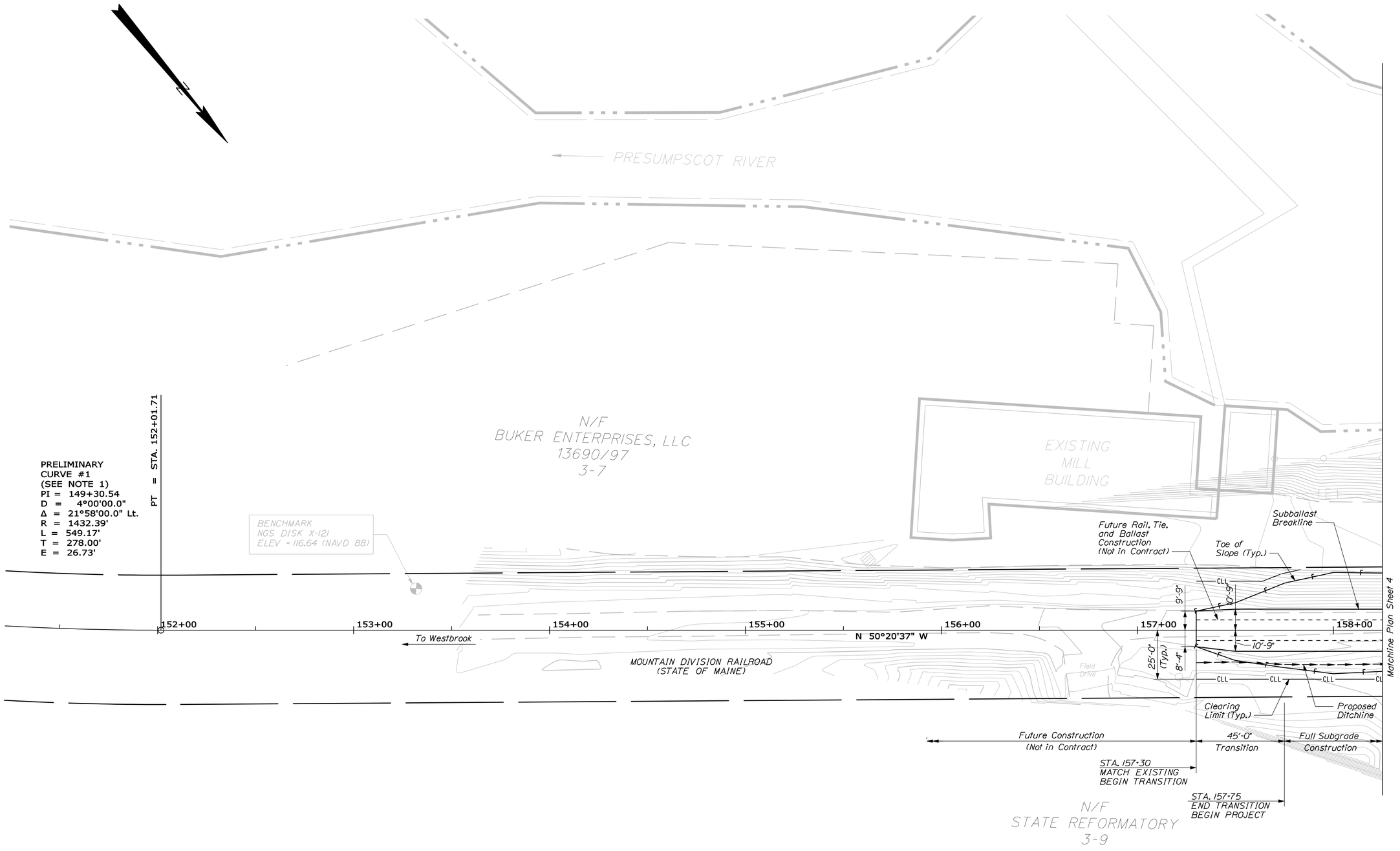

PLAN

25 0 25 50

Scale of Feet

NOTE:

1. The Alignment Data Shown is for Construction of Subgrade and Subballast Only. Final Alignment Design, Including Spiral Curves, Shall be Completed by Others as Part of a Future Contract.

STATE OF MAINE
DEPARTMENT OF TRANSPORTATION

-

BRIDGE NO. 0359

WIN
17860.03

BRIDGE PLANS

STATE OF MAINE
GREGORY S. GOODRICH
No. 13225
LICENSED
PROFESSIONAL ENGINEER

PROJ. MANAGER	C. BAKER	BY	DATE
DESIGN-DETAILED	CLC	CLC	4\29\13
CHECKED-REVIEWED	CSG	CDB	4\29\13
DESIGN2-DETAILED2	---	---	---
DESIGN3-DETAILED3	---	---	---
REVISIONS 1	---	---	---
REVISIONS 2	---	---	---
REVISIONS 3	---	---	---
REVISIONS 4	---	---	---
FIELD CHANGES	---	---	---

SIGNATURE

13225

P.E. NUMBER

MAY 10, 2013

DATE

MOUNTAIN DIVISION RAILROAD
MALLISON FALLS ROAD
WINDHAM CUMBERLAND COUNTY

GENERAL PLAN (1 OF 2)

SHEET NUMBER

3

OF 27

Filename: ...\cad\st\planset\003_Plan.dgn Division: Structures Username: kpreston Date:5/10/2013

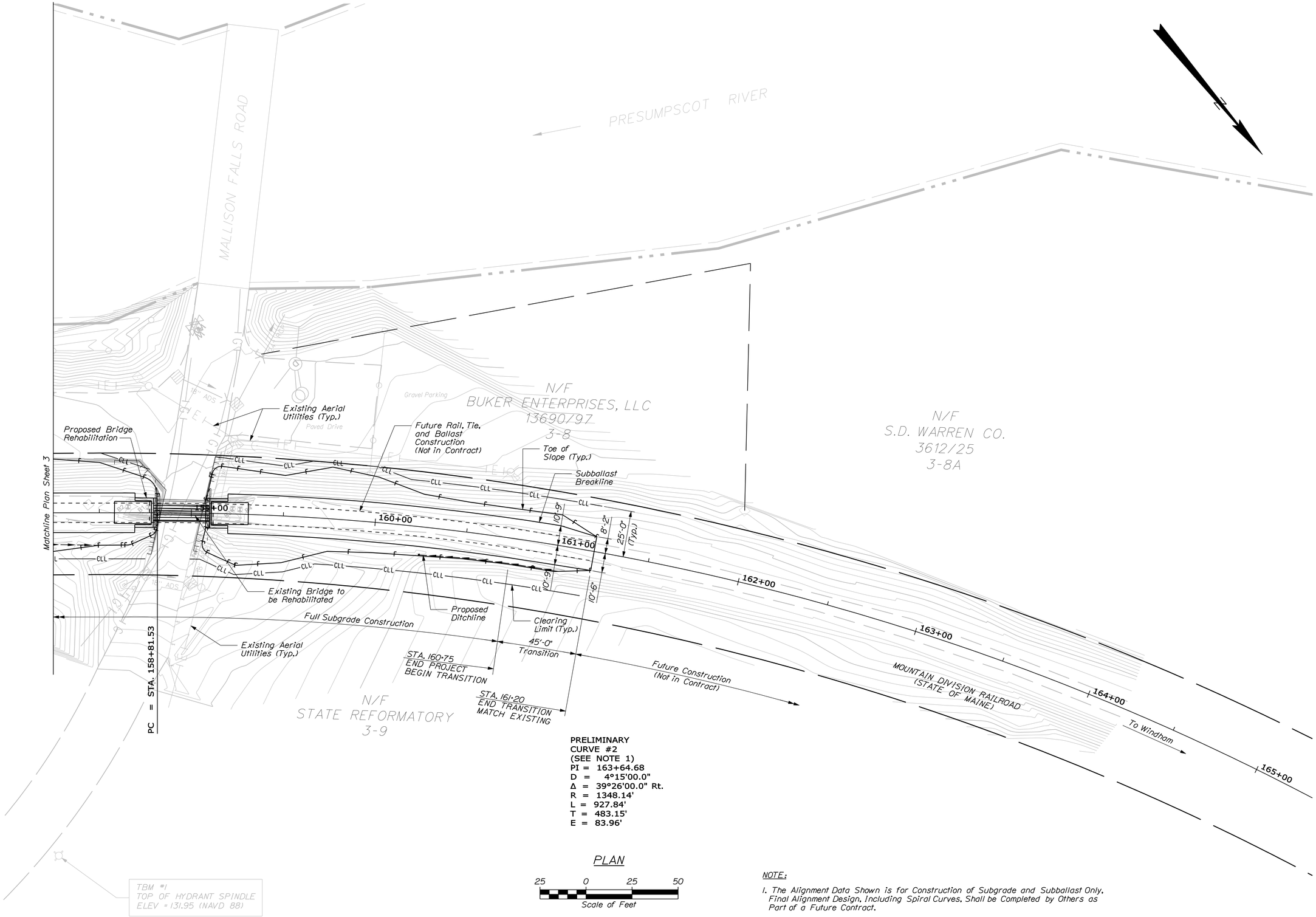

PRELIMINARY
CURVE #2
(SEE NOTE 1)
PI = 163+64.68
D = 4°15'00.0"
Δ = 39°26'00.0" Rt.
R = 1348.14'
L = 927.84'
T = 483.15'
E = 83.96'

PLAN

25 0 25 50
Scale of Feet

NOTE:

1. The Alignment Data Shown is for Construction of Subgrade and Subballast Only. Final Alignment Design, Including Spiral Curves, Shall be Completed by Others as Part of a Future Contract.

STATE OF MAINE
DEPARTMENT OF TRANSPORTATION

-

WIN 17860.03

BRIDGE PLANS

BRIDGE NO. 0359

STATE OF MAINE GREGORY S. GOODRICH No. 13225 LICENSED PROFESSIONAL ENGINEER

		BY	DATE
PROJ. MANAGER	C. BAKER		
DESIGN-DETAILED	CLC	CLC	4\29\13
CHECKED-REVIEWED	GSG	CDB	4\29\13
DESIGN2-DETAILED2	---	---	---
DESIGN3-DETAILED3	---	---	---
REVISIONS 1	---	---	---
REVISIONS 2	---	---	---
REVISIONS 3	---	---	---
REVISIONS 4	---	---	---
FIELD CHANGES	---	---	---

SIGNATURE
13225

P.E. NUMBER
MAY 10, 2013

DATE

MOUNTAIN DIVISION RAILROAD
MALLISON FALLS ROAD
WINDHAM CUMBERLAND COUNTY

GENERAL PLAN (2 OF 2)

SHEET NUMBER
4
OF 27

Filename: ...\cad\st\planset\004_Plan.dgn Division: Structures Username: kpreston Date:5/10/2013

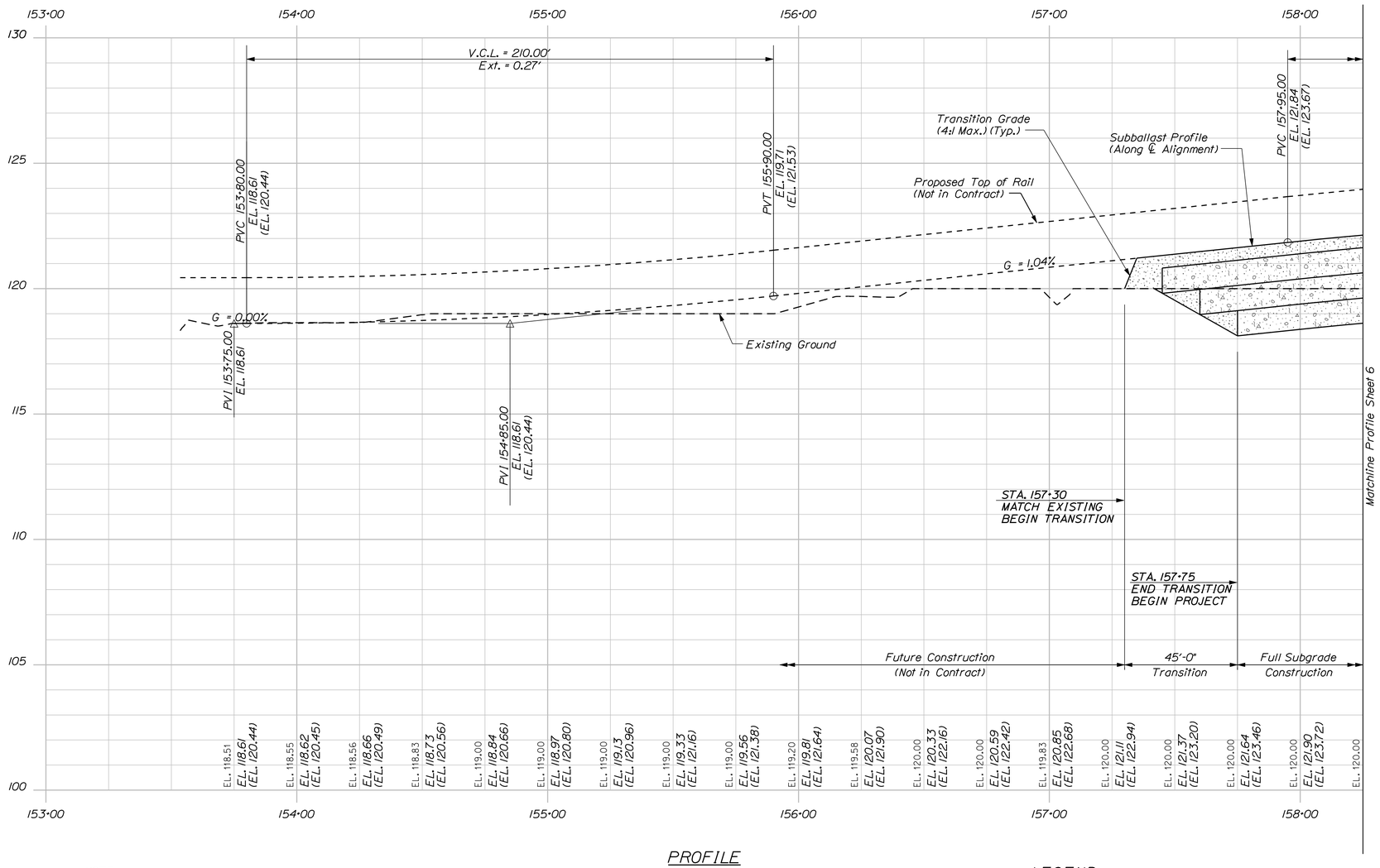

NOTE:

Vertical Curve Data is the same for both the finish grade of subballast and the top of rail. Elevations for Top of Rail Are Shown in parenthesis ( ).

PROFILE

Horiz. 25 0 25 50

Vert. 10 0 10 20

Scale of Feet

LEGEND

EL. XXX.XX = Existing Ground Elevations

EL. XXX.XX = Finish Grade Elevations at Top of Subballast

(EL. XXX.XX) = Finish Grade Elevations at Proposed Top of Rail (Not in Contract)

Filename: ...\cad\st\planset\005_Profile.dgn Division: Structures Username: kpreston Date:5/10/2013

STATE OF MAINE
DEPARTMENT OF TRANSPORTATION

-

BRIDGE NO. 0359

WIN
17860.03

BRIDGE PLANS

STATE OF MAINE
GREGORY S. GOODRICH
No. 13225
LICENSED
PROFESSIONAL ENGINEER

P.E. NUMBER
13225

MAY 10, 2013
DATE

PROJ. MANAGER	C. BAKER	BY	DATE
DESIGN-DETAILED	CLC	CLC	4\29\13
CHECKED-REVIEWED	GSG	CDB	4\29\13
DESIGN2-DETAILED2	---	---	---
DESIGN3-DETAILED3	---	---	---
REVISIONS 1	---	---	---
REVISIONS 2	---	---	---
REVISIONS 3	---	---	---
REVISIONS 4	---	---	---
FIELD CHANGES	---	---	---

MOUNTAIN DIVISION RAILROAD
MALLISON FALLS ROAD
WINDHAM CUMBERLAND COUNTY

PROFILE (1 OF 2)

SHEET NUMBER
5
OF 27

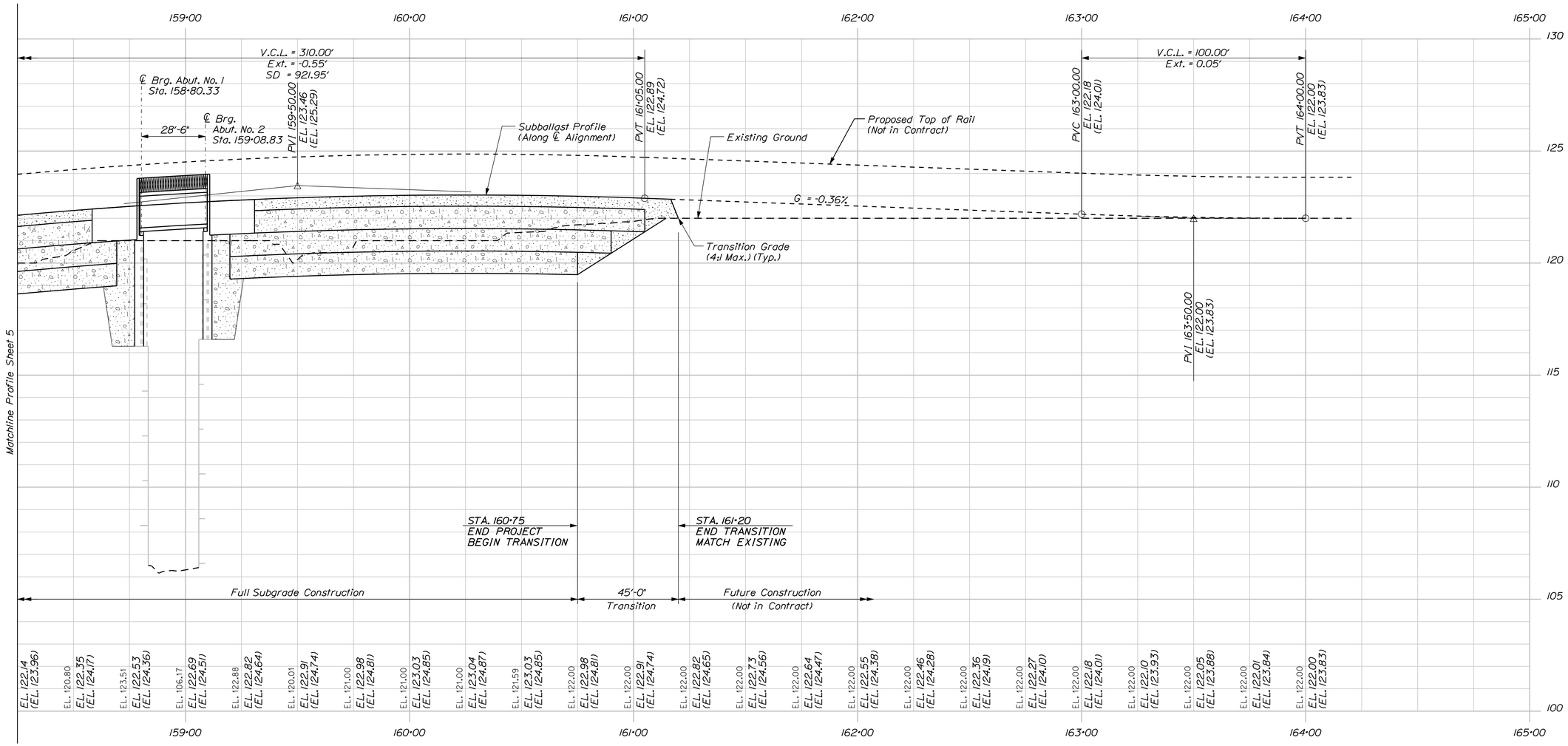

PROFILE

Horiz. 25 0 25 50

Vert. 10 0 10 20

Scale of Feet

NOTE:

Vertical Curve Data is the same for both the finish grade of subballast and the top of rail. Elevations for Top of Rail Are Shown in parenthesis ( ).

LEGEND

EL. XXX.XX = Existing Ground Elevations

EL. XXX.XX = Finish Grade Elevations at Top of Subballast

(EL. XXX.XX) = Finish Grade Elevations at Proposed Top of Rail (Not in Contract)

STATE OF MAINE
DEPARTMENT OF TRANSPORTATION

-

BRIDGE NO. 0359

WIN 17860.03

BRIDGE PLANS

STATE OF MAINE
GREGORY S. GOODRICH
No. 13225
LICENSED
PROFESSIONAL ENGINEER

		BY	DATE
PROJ. MANAGER	C. BAKER		
DESIGN-DETAILED	CLC	CLC	4\29\13
CHECKED-REVIEWED	GSG	CDB	4\29\13
DESIGN2-DETAILED2	---	---	---
DESIGN3-DETAILED3	---	---	---
REVISIONS 1	---	---	---
REVISIONS 2	---	---	---
REVISIONS 3	---	---	---
REVISIONS 4	---	---	---
FIELD CHANGES	---	---	---

SIGNATURE 13225

P.E. NUMBER MAY 10, 2013

DATE

MOUNTAIN DIVISION RAILROAD
MALLISON FALLS ROAD
WINDHAM CUMBERLAND COUNTY

PROFILE (2 OF 2)

SHEET NUMBER

6

OF 27

Filename: ...\cad\st\planset\006_Profile.dgn Division: Structures Username: kpreston Date:5/10/2013

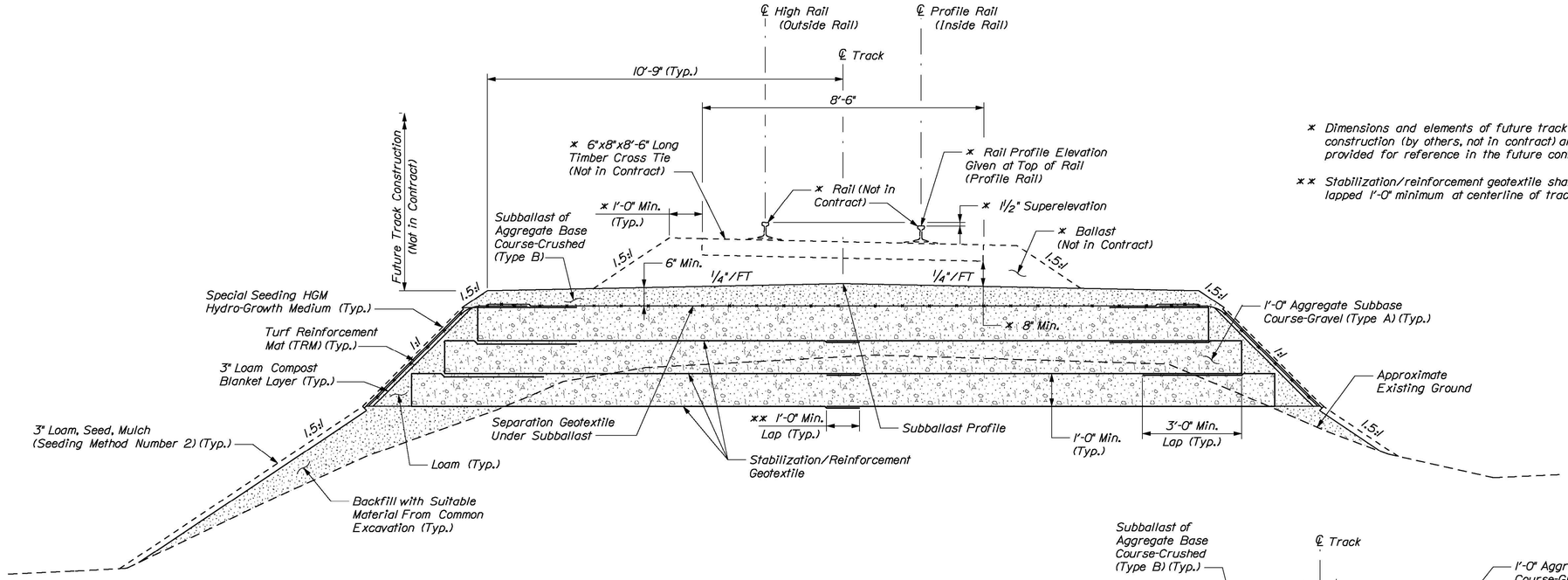

* Dimensions and elements of future track construction (by others, not in contract) are provided for reference in the future contract.

** Stabilization/reinforcement geotextile shall be lapped 1'-0" minimum at centerline of track.

TYPICAL APPROACH SECTION

Scale: ½" = 1'-0"

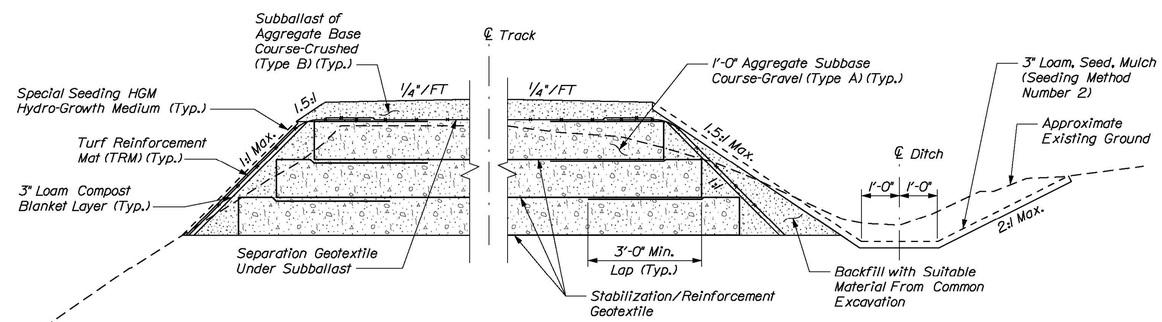

STATION 157+75 TO STATION 158+25, RT

TYPICAL CUT SECTION

(Future Construction Not Shown for Clarity)

Scale: ½" = 1'-0"

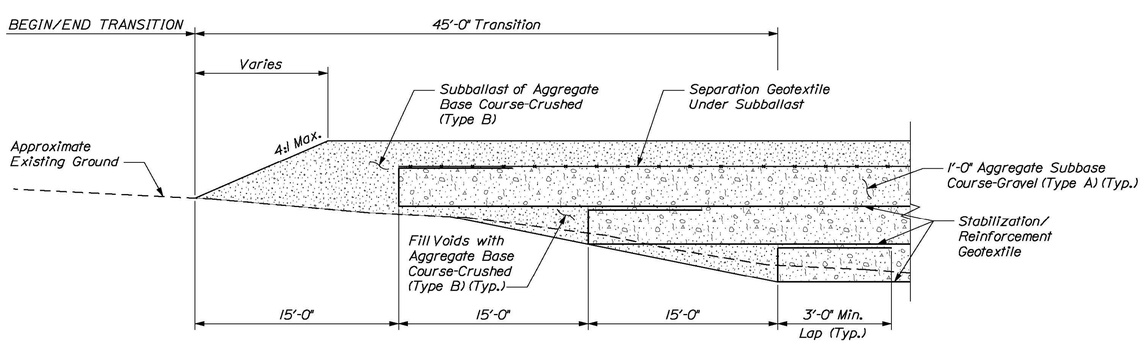

TYPICAL APPROACH TRANSITION

Not to Scale

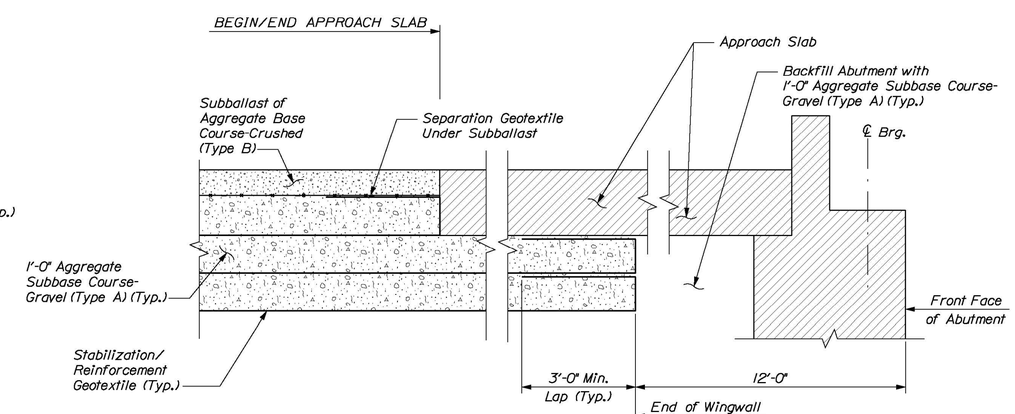

Note:
For Additional Information, See Longitudinal Section on Sheet 21.

TYPICAL TRANSITION AT BRIDGE

Not to Scale

STATE OF MAINE
DEPARTMENT OF TRANSPORTATION

-

WIN 17860.03

BRIDGE NO. 0359

BRIDGE PLANS

STATE OF MAINE JEFFREY TWEEDIE No. 9544 LICENSED PROFESSIONAL ENGINEER

PROJ. MANAGER	C. BAKER	BY	DATE
DESIGN-DETAILED	Maine/DOT	CLC	4\4\13
CHECKED-REVIEWED	Maine/DOT	Maine/DOT	4\4\13
DESIGN2-DETAILED2	...	...	...
DESIGN3-DETAILED3	...	...	...
REVISIONS 1	...	...	...
REVISIONS 2	...	...	...
REVISIONS 3	...	...	...
REVISIONS 4	...	...	...
FIELD CHANGES	...	...	...

SIGNATURE: 9544
P.E. NUMBER
April 16, 2013
DATE

MOUNTAIN DIVISION RAILROAD
MALLISON FALLS ROAD
WINDHAM CUMBERLAND COUNTY

TYPICAL APPROACH SECTION & DETAILS

SHEET NUMBER

7

OF 27

Filename: ...\cad\st\planset\007_typ.dgn Division: Structures Username: bmasse Date:4/5/2013

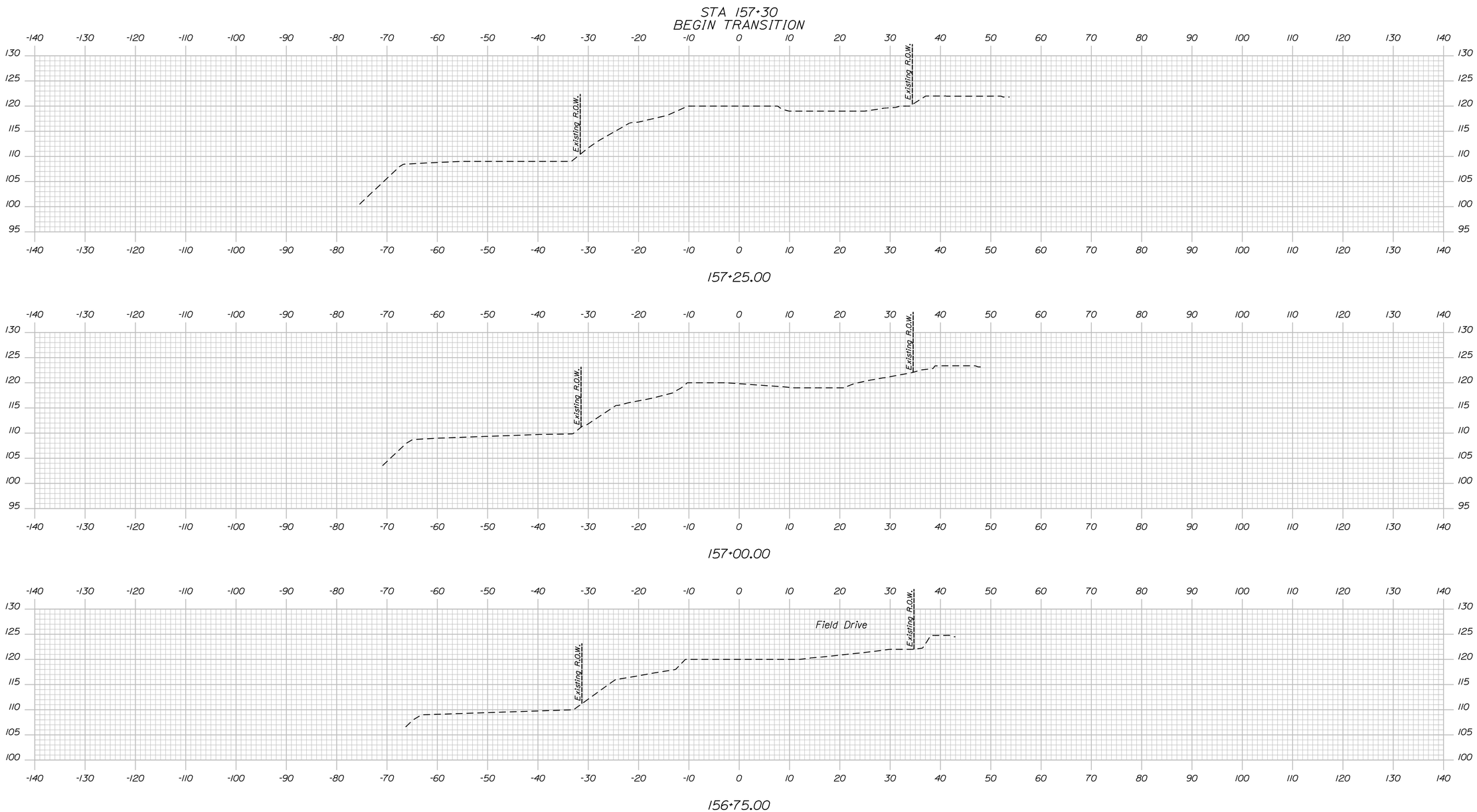

STATE OF MAINE
DEPARTMENT OF TRANSPORTATION

-

BRIDGE NO. 0359

WIN
17860.03

BRIDGE PLANS

STATE OF MAINE
GREGORY S. GOODRICH
No. 13225
LICENSED
PROFESSIONAL ENGINEER

		BY	DATE
PROJ. MANAGER	C. BAKER		
DESIGN-DETAILED	LSC	CLC	4\29\13
CHECKED-REVIEWED	GSG	CDB	4\29\13
DESIGN2-DETAILED2	---	---	---
DESIGN3-DETAILED3	---	---	---
REVISIONS 1	---		---
REVISIONS 2	---		---
REVISIONS 3	---		---
REVISIONS 4	---		---
FIELD CHANGES	---		---

SIGNATURE
13225

P.E. NUMBER
MAY 10, 2013

DATE

MOUNTAIN DIVISION RAILROAD
MALLISON FALLS ROAD
WINDHAM CUMBERLAND COUNTY

CROSS SECTIONS

SHEET NUMBER
8
OF 27

Sta. 156+75.00 to Sta. 157+25.00

Filename: ...\planset\008_Cross Section.dgn Division: Structures Username: kpreston Date:5/10/2013

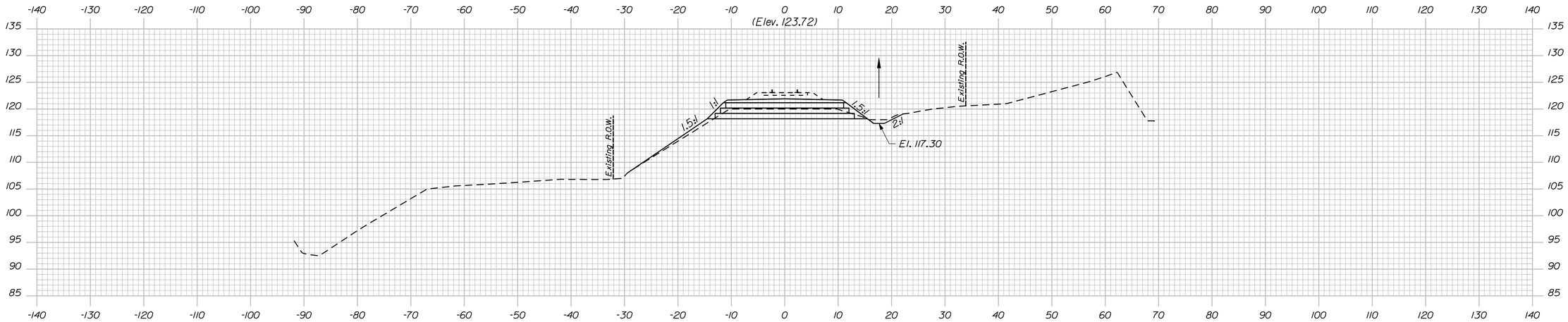

158+00.00

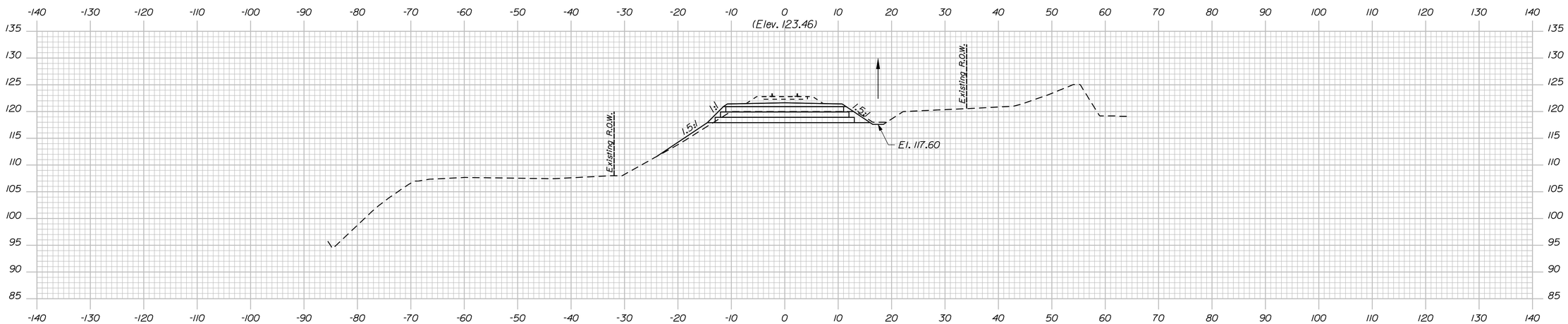

157+75.00
BEGIN PROJECT

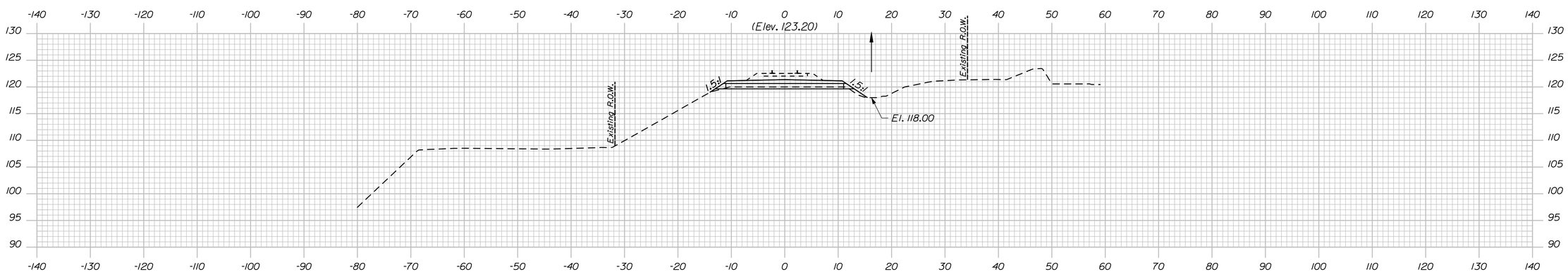

157+50.00

STATE OF MAINE
DEPARTMENT OF TRANSPORTATION

-

WIN
17860.03

BRIDGE NO. 0359

BRIDGE PLANS

STATE OF MAINE
GREGORY S. GOODRICH
No. 13225
LICENSED PROFESSIONAL ENGINEER

P.E. NUMBER
13225

MAY 10, 2013
DATE

PROJ. MANAGER	C. BIMER	BY	DATE
DESIGN-DETAILED	CLC	CLC	4\29\13
CHECKED-REVIEWED	CSG	CDB	4\29\13
DESIGN2-DETAILED2	---	---	---
DESIGN3-DETAILED3	---	---	---
REVISIONS 1	---	---	---
REVISIONS 2	---	---	---
REVISIONS 3	---	---	---
REVISIONS 4	---	---	---
FIELD CHANGES	---	---	---

MOUNTAIN DIVISION RAILROAD
MALLISON FALLS ROAD
WINDHAM CUMBERLAND COUNTY

CROSS SECTIONS

SHEET NUMBER
9
OF 27

Filename: ...\planset\009_Cross Section.dgn Division: Structures Username: kpreston Date:5/10/2013

Sta. 157+50.00 to Sta. 158+00.00

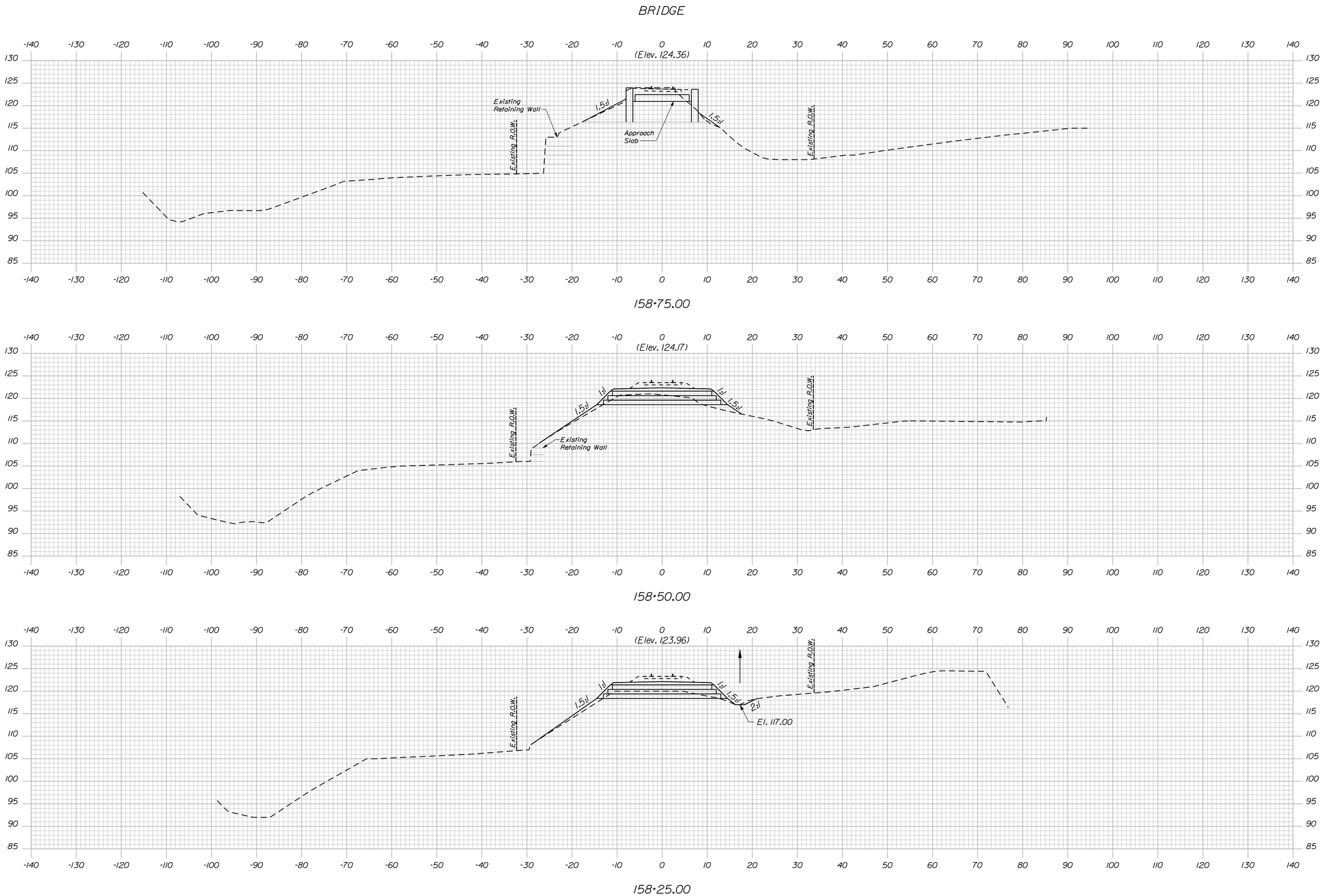

STATE OF MAINE
DEPARTMENT OF TRANSPORTATION

-

WIN 17860.03

BRIDGE PLANS

BRIDGE NO. 0359

STATE OF MAINE
GREGORY S. GOODRICH
No. 13225
LICENSED
PROFESSIONAL ENGINEER

	BY	DATE
PROJ. MANAGER	C. BAKER	
DESIGN-DETAILED	CLC	4\29\13
CHECKED-REVIEWED	CSG	4\29\13
DESIGN2-DETAILED2	---	---
DESIGN3-DETAILED3	---	---
REVISIONS 1	---	---
REVISIONS 2	---	---
REVISIONS 3	---	---
REVISIONS 4	---	---
FIELD CHANGES	---	---

SIGNATURE
13225

P.E. NUMBER
MAY 10, 2013

DATE

MOUNTAIN DIVISION RAILROAD
MALLISON FALLS ROAD
WINDHAM CUMBERLAND COUNTY

CROSS SECTIONS

SHEET NUMBER
10
OF 27

Sta. 158+25.00 to Sta. 158+75.00

Filename: ...\planset\010_Cross Section.dgn Division: Structures Username: kpreston Date:5/10/2013

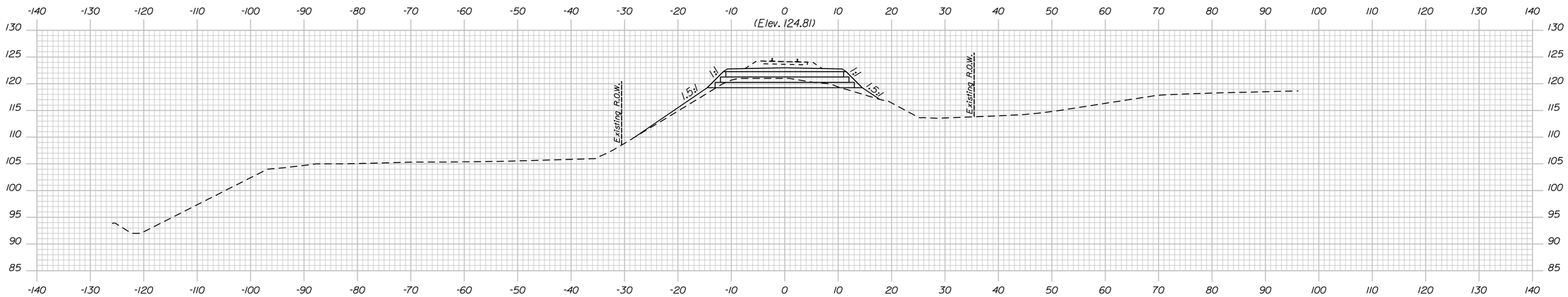

159+75.00

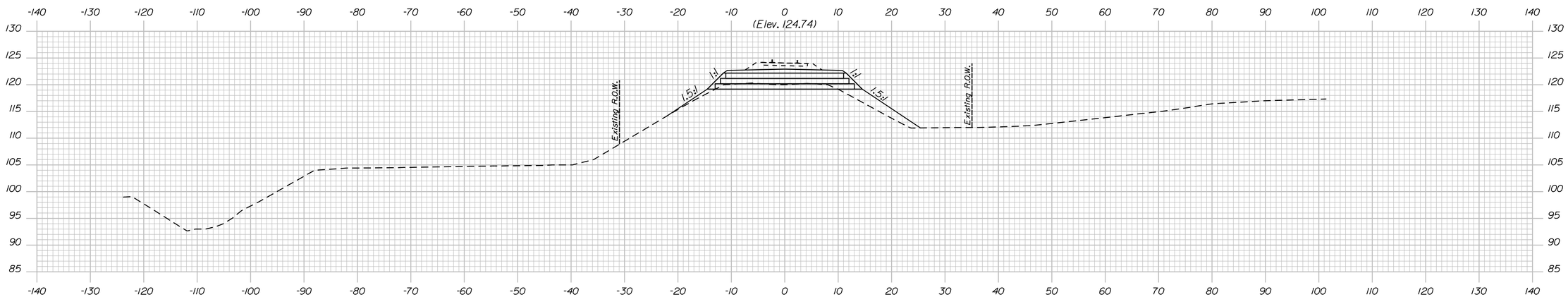

159+50.00

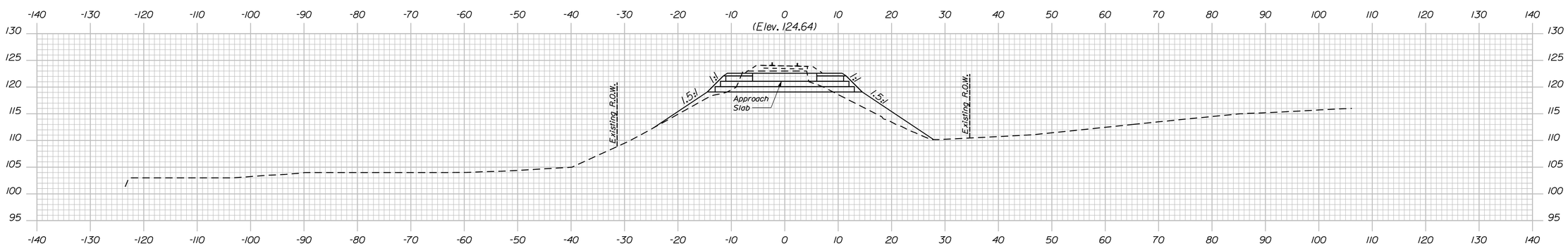

159+25.00

BRIDGE

STATE OF MAINE
DEPARTMENT OF TRANSPORTATION

-

WIN 17860.03

BRIDGE NO. 0359

BRIDGE PLANS

STATE OF MAINE GREGORY S. GOODRICH No. 13225 LICENSED PROFESSIONAL ENGINEER

PROJ. MANAGER	C. BAKER	BY	DATE
DESIGN-DETAILED	CLC	CLC	4\29\13
CHECKED-REVIEWED	CSG	CDB	4\29\13
DESIGN2-DETAILED2	---	---	---
DESIGN3-DETAILED3	---	---	---
REVISIONS 1	---	---	---
REVISIONS 2	---	---	---
REVISIONS 3	---	---	---
REVISIONS 4	---	---	---
FIELD CHANGES	---	---	---

SIGNATURE

13225

P.E. NUMBER

MAY 10, 2013

DATE

MOUNTAIN DIVISION RAILROAD
MALLISON FALLS ROAD
WINDHAM CUMBERLAND COUNTY

CROSS SECTIONS

SHEET NUMBER

11

OF 27

Sta. 159+25.00 to Sta. 159+75.00

Filename: ...\planset\011_Cross Section.dgn Division: Structures Username: kpreston Date:5/10/2013

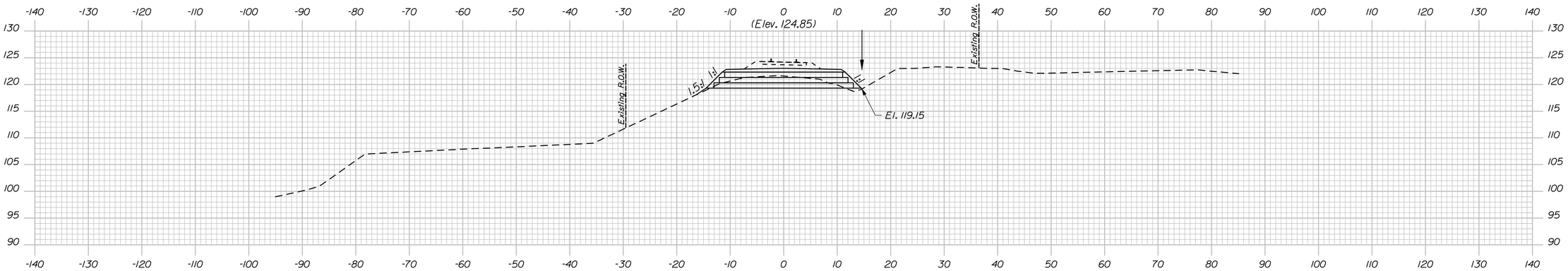

160+50.00

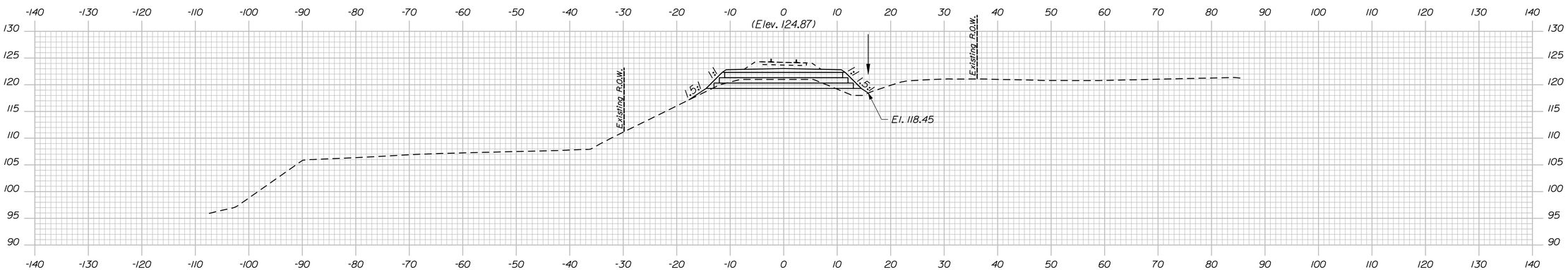

160+25.00

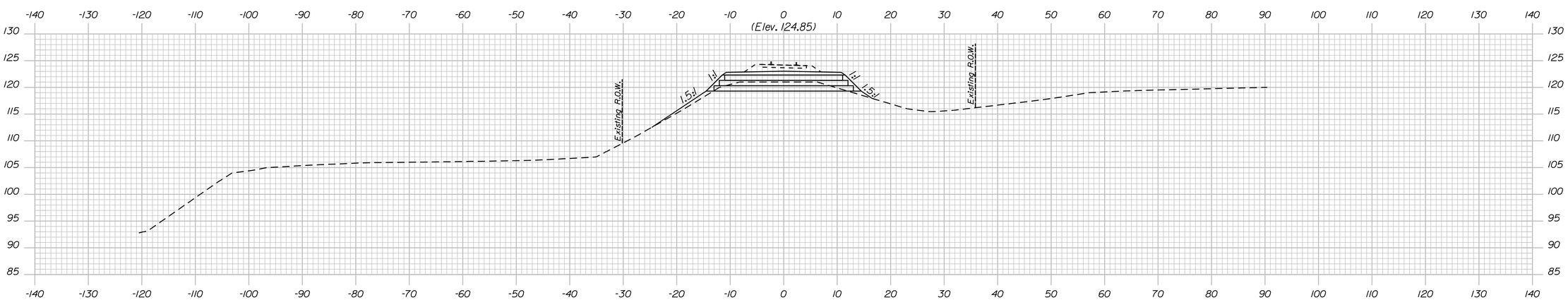

160+00.00

STATE OF MAINE
DEPARTMENT OF TRANSPORTATION

-

WIN
17860.03

BRIDGE NO. 0359

BRIDGE PLANS

STATE OF MAINE
GREGORY S. GOODRICH
No. 13225
LICENSED
PROFESSIONAL ENGINEER

PROJ. MANAGER	C. BAKER	BY	DATE
DESIGN-DETAILED	CLC	CLC	4\29\13
CHECKED-REVIEWED	CSG	CDB	4\29\13
DESIGN2-DETAILED2	---	---	---
DESIGN3-DETAILED3	---	---	---
REVISIONS 1	---	---	---
REVISIONS 2	---	---	---
REVISIONS 3	---	---	---
REVISIONS 4	---	---	---
FIELD CHANGES	---	---	---

SIGNATURE
13225
P.E. NUMBER
MAY 10, 2013
DATE

MOUNTAIN DIVISION RAILROAD
MALLISON FALLS ROAD
WINDHAM CUMBERLAND COUNTY

CROSS SECTIONS

SHEET NUMBER
12
OF 27

Filename: ...\planset\012_Cross Section.dgn Division: Structures Username: kpreston Date:5/10/2013

Sta. 160+00.00 to Sta. 160+50.00

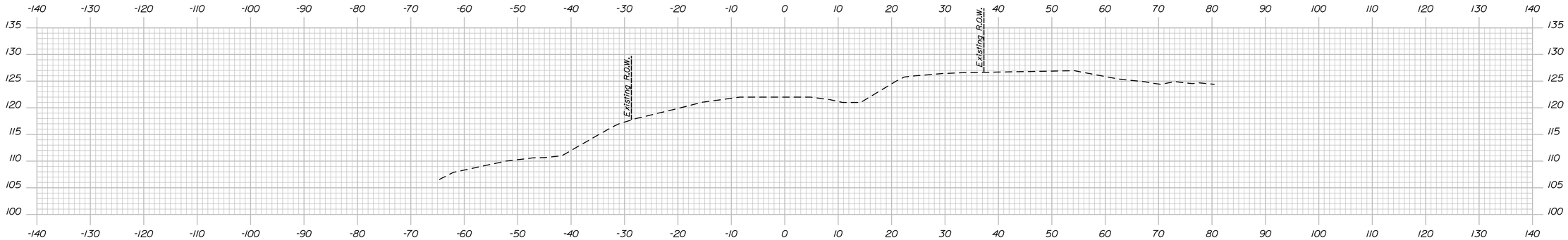

161+25.00
STA 161+20
END TRANSITION

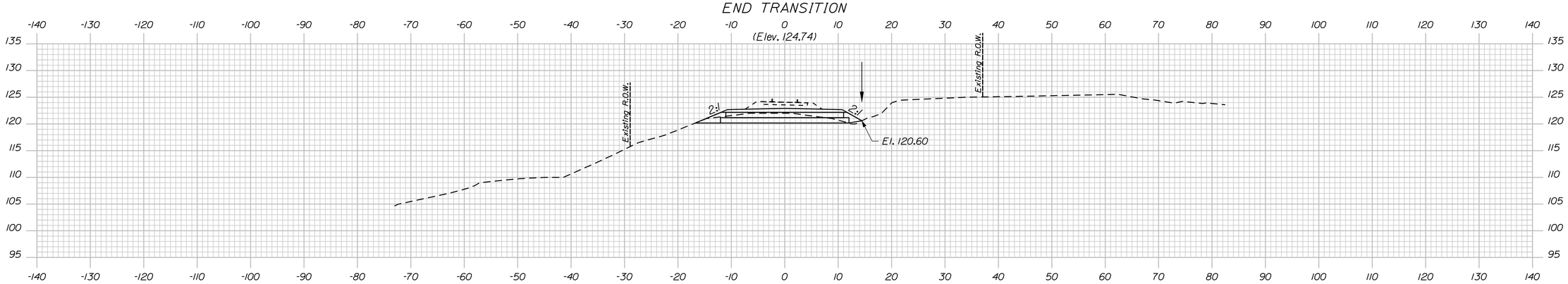

161+00.00

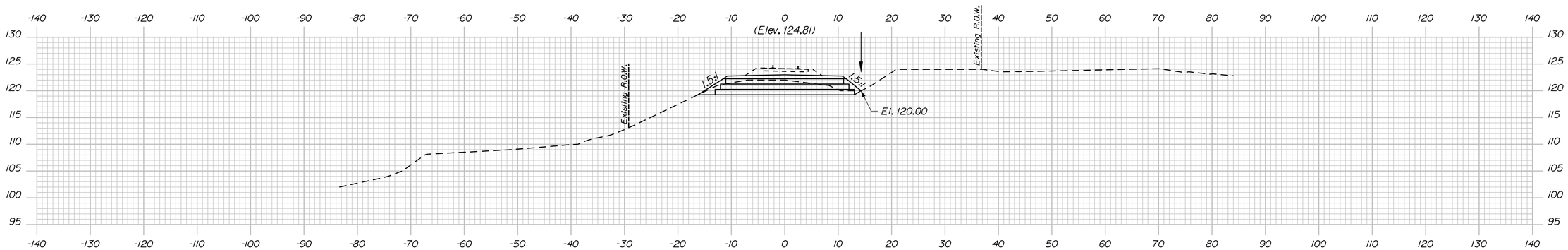

160+75.00
END PROJECT

STATE OF MAINE
DEPARTMENT OF TRANSPORTATION

-

WIN
17860.03

BRIDGE PLANS

BRIDGE NO. 0359

STATE OF MAINE
GREGORY S. GOODRICH
No. 13225
LICENSED PROFESSIONAL ENGINEER

P.E. NUMBER
MAY 10, 2013
DATE

SIGNATURE
13225

PROJ. MANAGER	C. BAKER	BY	DATE
DESIGN-DETAILED	CLC	CLC	4/29/13
CHECKED-REVIEWED	GSG	CDB	4/29/13
DESIGN2-DETAILED2	---	---	---
DESIGN3-DETAILED3	---	---	---
REVISIONS 1	---	---	---
REVISIONS 2	---	---	---
REVISIONS 3	---	---	---
REVISIONS 4	---	---	---
FIELD CHANGES	---	---	---

MOUNTAIN DIVISION RAILROAD
MALLISON FALLS ROAD
WINDHAM CUMBERLAND COUNTY

CROSS SECTIONS

SHEET NUMBER
13
OF 27

Filename: ...\planset\013_Cross Section.dgn Division: Structures Username: kpreston Date:5/10/2013

Sta. 160+75.00 to Sta. 161+25.00

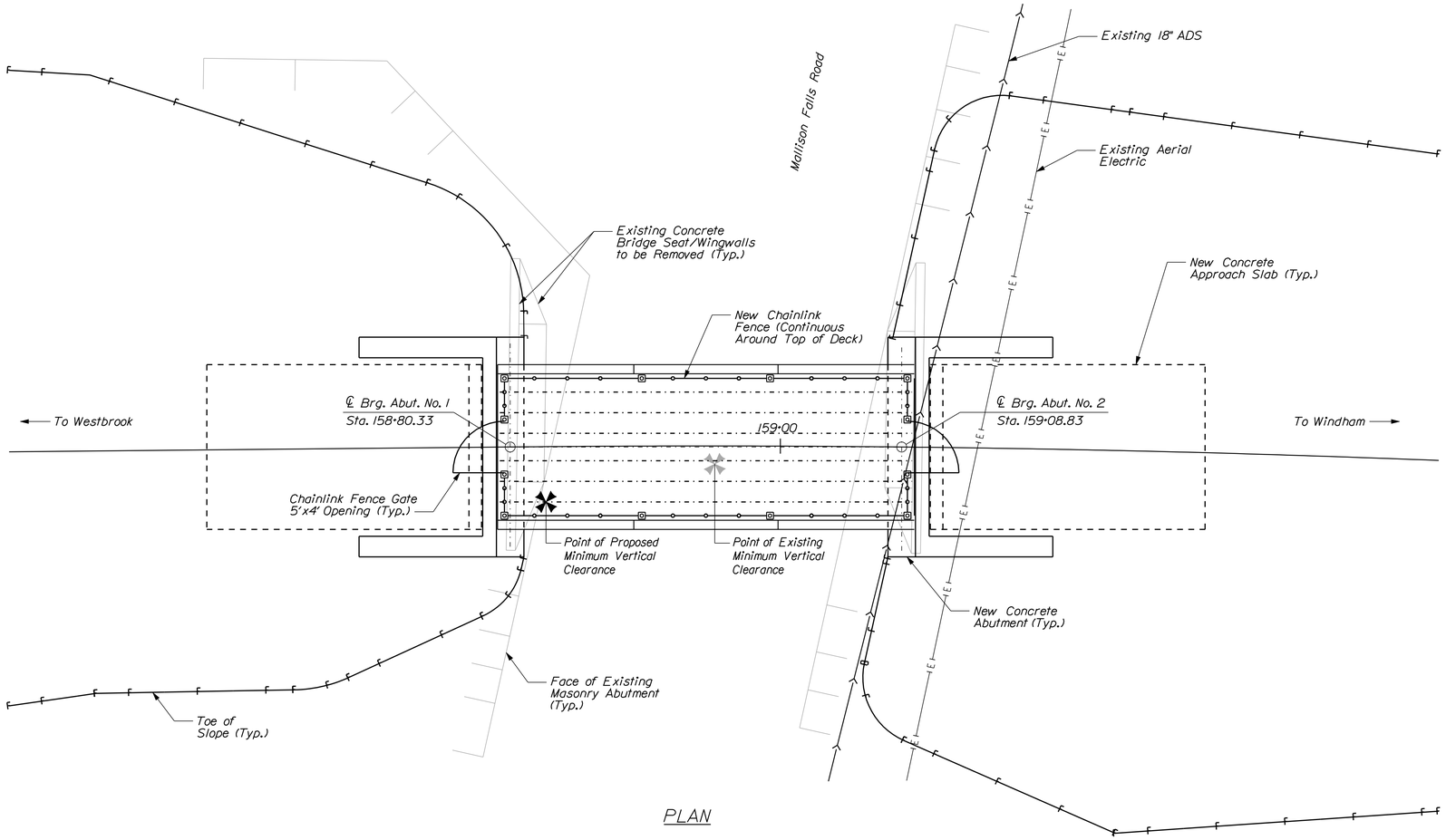

PLAN

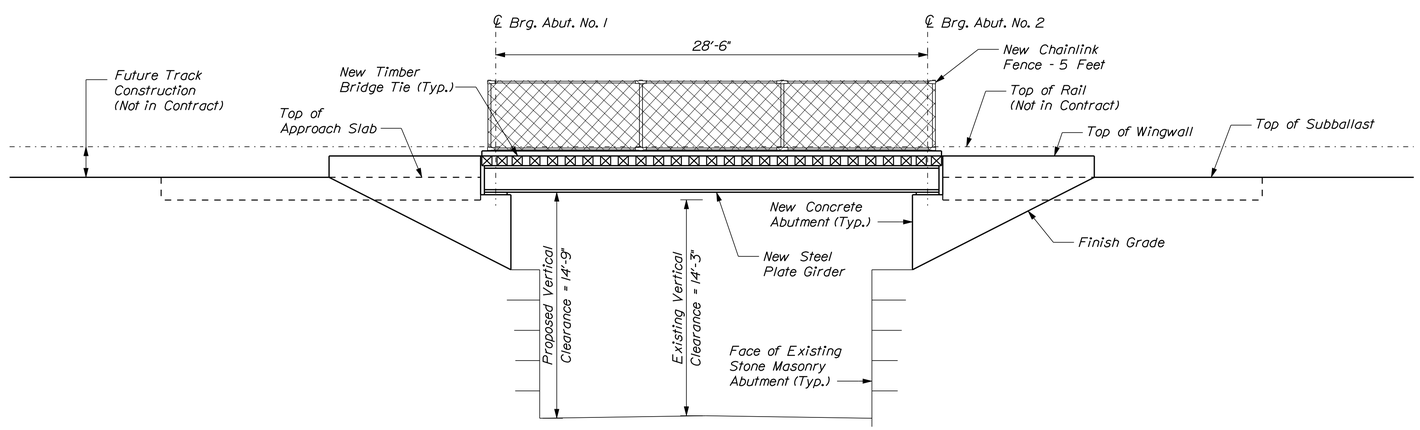

ELEVATION

STATE OF MAINE
DEPARTMENT OF TRANSPORTATION

-

BRIDGE NO. 0359

WIN 17860.03

BRIDGE PLANS

STATE OF MAINE
GREGORY S. GOODRICH
No. 13225
LICENSED PROFESSIONAL ENGINEER

PROJ. MANAGER	C. BAKER	BY	DATE
DESIGN-DETAILED	LSC	BJM	4\29\13
CHECKED-REVIEWED	GSG	CDB	4\29\13
DESIGN2-DETAILED2	---	---	---
DESIGN3-DETAILED3	---	---	---
REVISIONS 1	---	---	---
REVISIONS 2	---	---	---
REVISIONS 3	---	---	---
REVISIONS 4	---	---	---
FIELD CHANGES	---	---	---

SIGNATURE 13225

P.E. NUMBER

MAY 10, 2013

DATE

MOUNTAIN DIVISION RAILROAD
MALLISON FALLS ROAD
WINDHAM CUMBERLAND COUNTY

PLAN AND ELEVATION

SHEET NUMBER

14

OF 27

Filename: ...\st\planset\014_Plan_Elev.dgn Division: Structures Username: kpreston Date:5/10/2013

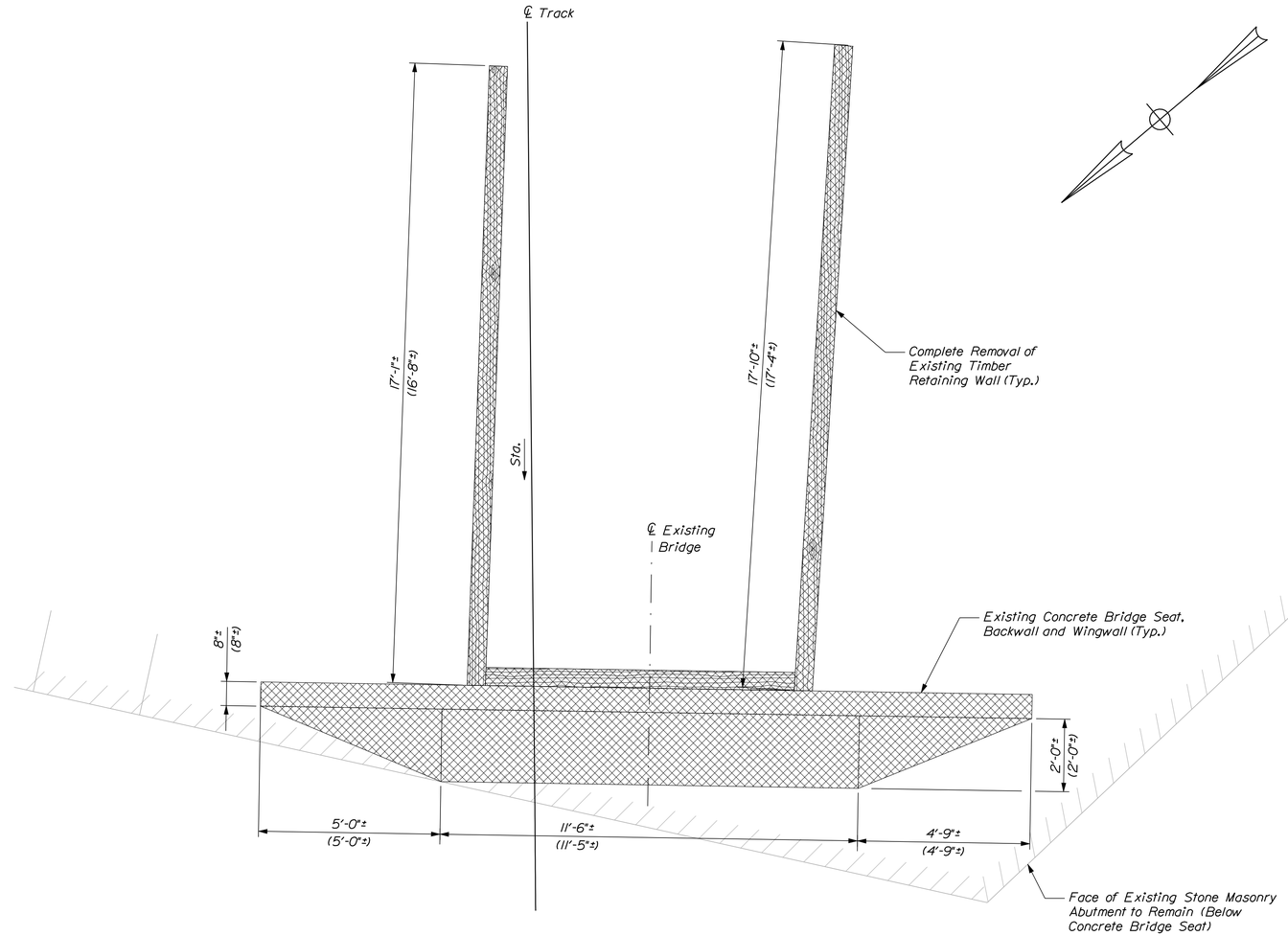

PLAN

Abutment No.1 Shown. Abutment No. 2 Similar
Dimensions for Abutment No.2 Shown in Parenthesis

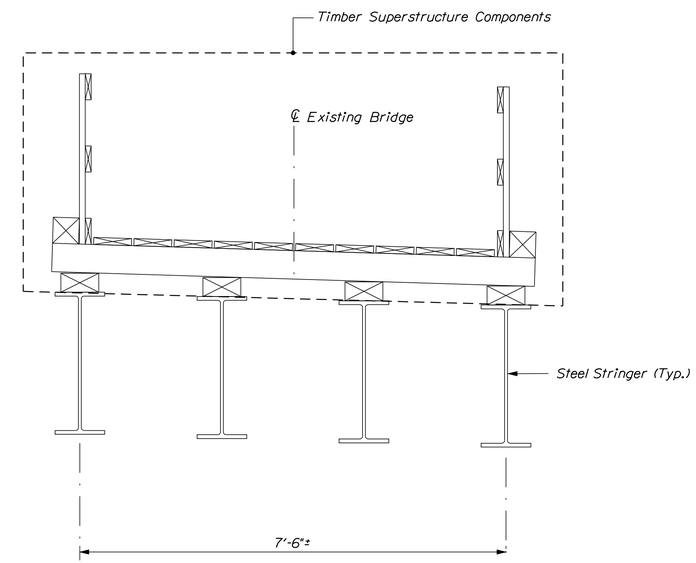

EXISTING BRIDGE SUPERSTRUCTURE - TO BE REMOVED

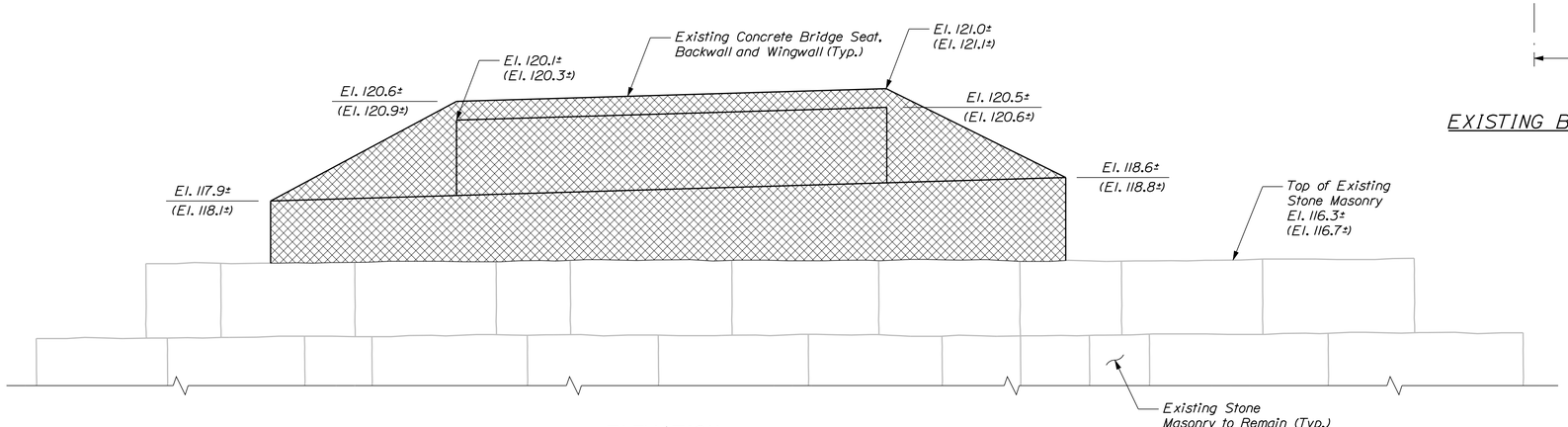

ELEVATION

Abutment No.1 Shown. Abutment No. 2 Similar
Elevations for Abutment No.2 Shown in Parenthesis

LEGEND

Limits of Existing Bridge Removal

NOTE

1. All dimensions and elevations have been obtained through limited field measurements and limited survey and are not guaranteed. Contractor shall verify all information shown.

STATE OF MAINE
DEPARTMENT OF TRANSPORTATION

-

BRIDGE NO. 0359

WIN
17860.03

BRIDGE PLANS

STATE OF MAINE
GREGORY S. GOODRICH
No. 13225
LICENSED
PROFESSIONAL ENGINEER

PROJ. MANAGER	C. BAKER	BY	DATE
DESIGN-DETAILED	LSC	CLC	4/29/13
CHECKED-REVIEWED	GSG	CDB	4/29/13
DESIGN2-DETAILED2	---	---	---
DESIGN3-DETAILED3	---	---	---
REVISIONS 1	---	---	---
REVISIONS 2	---	---	---
REVISIONS 3	---	---	---
REVISIONS 4	---	---	---
FIELD CHANGES	---	---	---

SIGNATURE

13225

P.E. NUMBER

MAY 10, 2013

DATE

MOUNTAIN DIVISION RAILROAD
MALLISON FALLS ROAD
WINDHAM CUMBERLAND COUNTY

DEMOLITION PLAN

SHEET NUMBER

15

OF 27

Filename: ...\st\planset\015_Demolition.dgn Division: Structures Username: kpreston Date:5/10/2013

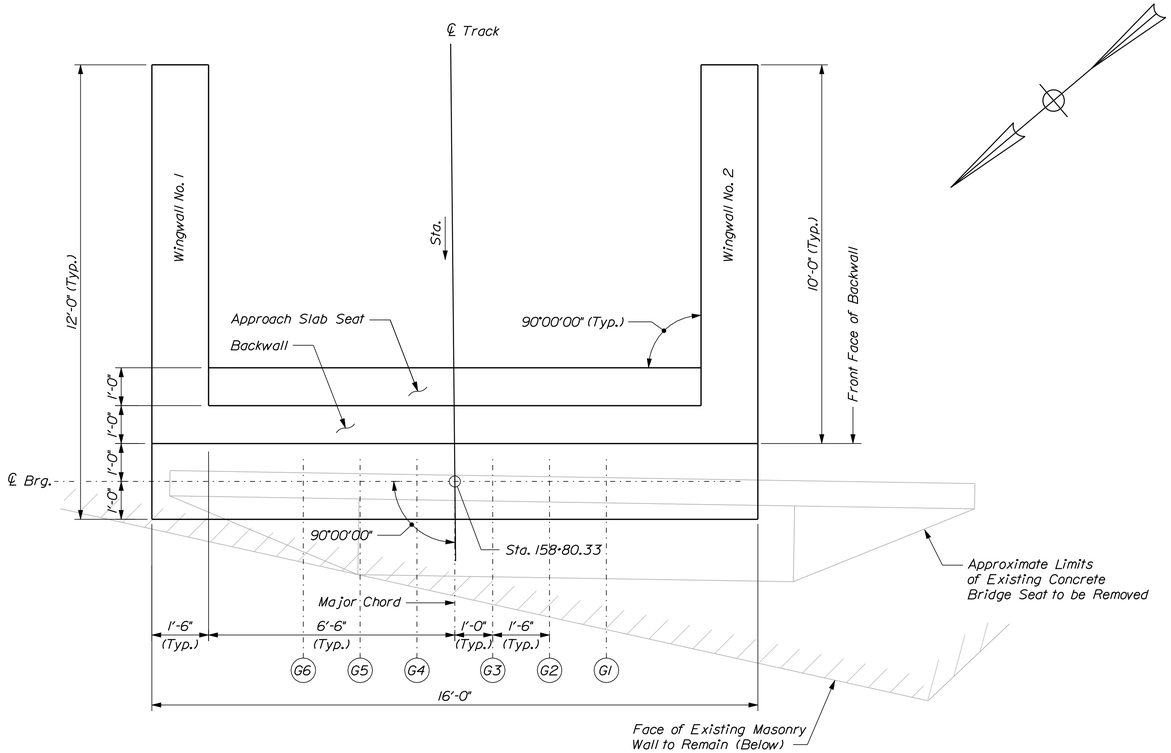

PLAN - ABUTMENT NO. 1

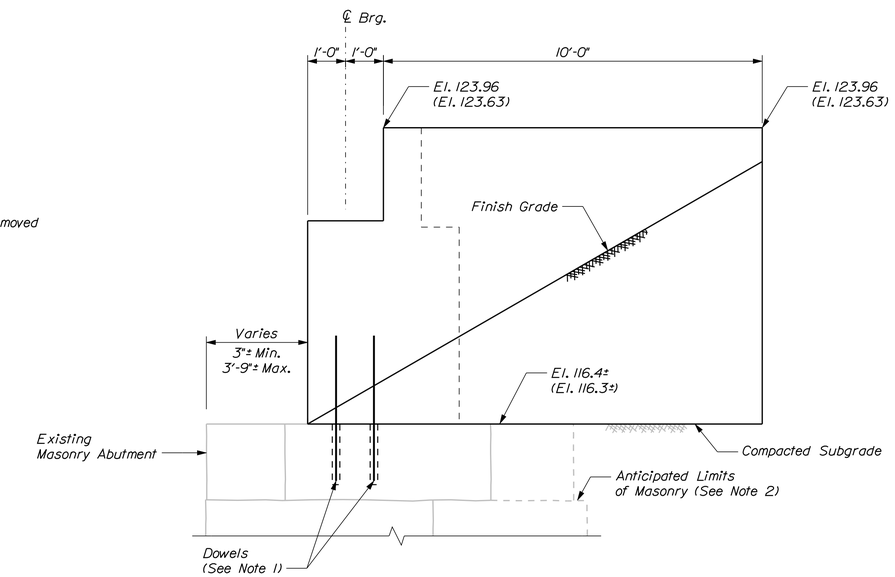

WINGWALL NO. 2

Wingwall No. 2 Shown. Wingwall No. 1 Similar but Opposite Hand
Elevations for Wingwall No. 1 Shown in Parenthesis Where Different

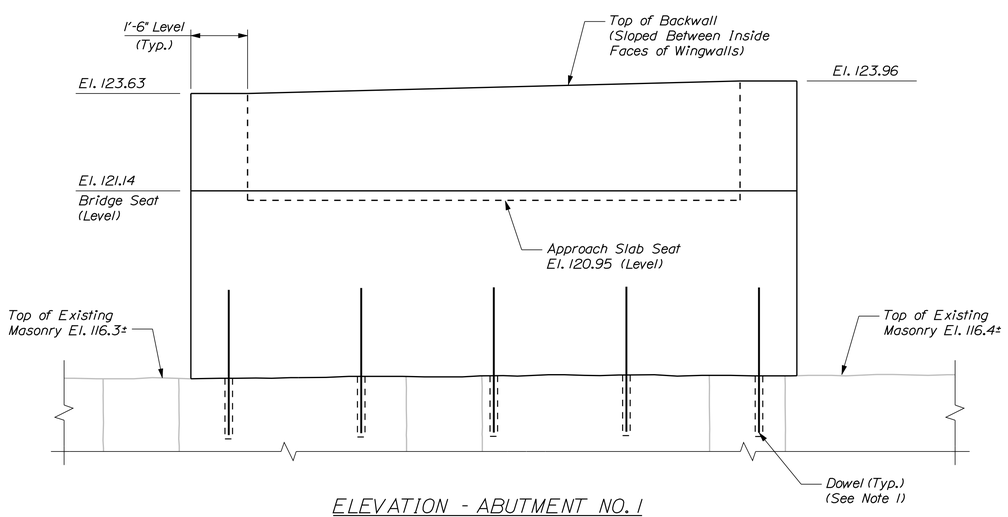

ELEVATION - ABUTMENT NO. 1

NOTE

1. Dowels for concrete to masonry connection. See Sheet 19 for additional information.

2. Limits of masonry are assumed based on limited geotechnical data. The Contractor shall verify limits during construction and notify the Resident of any conflicts.

STATE OF MAINE
DEPARTMENT OF TRANSPORTATION

-

BRIDGE NO. 0359

WIN
17860.03

BRIDGE PLANS

STATE OF MAINE
GREGORY S. GOODRICH
No. 13225
LICENSED
PROFESSIONAL ENGINEER

PROJ. MANAGER	C. BAKER		
DESIGN-DETAILED	LSC	BJM	4\29\13
CHECKED-REVIEWED	GSG	CDB	4\29\13
DESIGN2-DETAILED2	---	---	---
DESIGN3-DETAILED3	---	---	---
REVISIONS 1	---	---	---
REVISIONS 2	---	---	---
REVISIONS 3	---	---	---
REVISIONS 4	---	---	---
FIELD CHANGES	---	---	---

SIGNATURE
13225
P.E. NUMBER
MAY 10, 2013
DATE

MOUNTAIN DIVISION RAILROAD
MALLISON FALLS ROAD
WINDHAM CUMBERLAND COUNTY

ABUTMENT NO. 1 DETAILS

SHEET NUMBER
16
OF 27

Filename: ...\cad\st\planset\016_Abut1.dgn Division: Structures Username: kpreston Date:5/10/2013

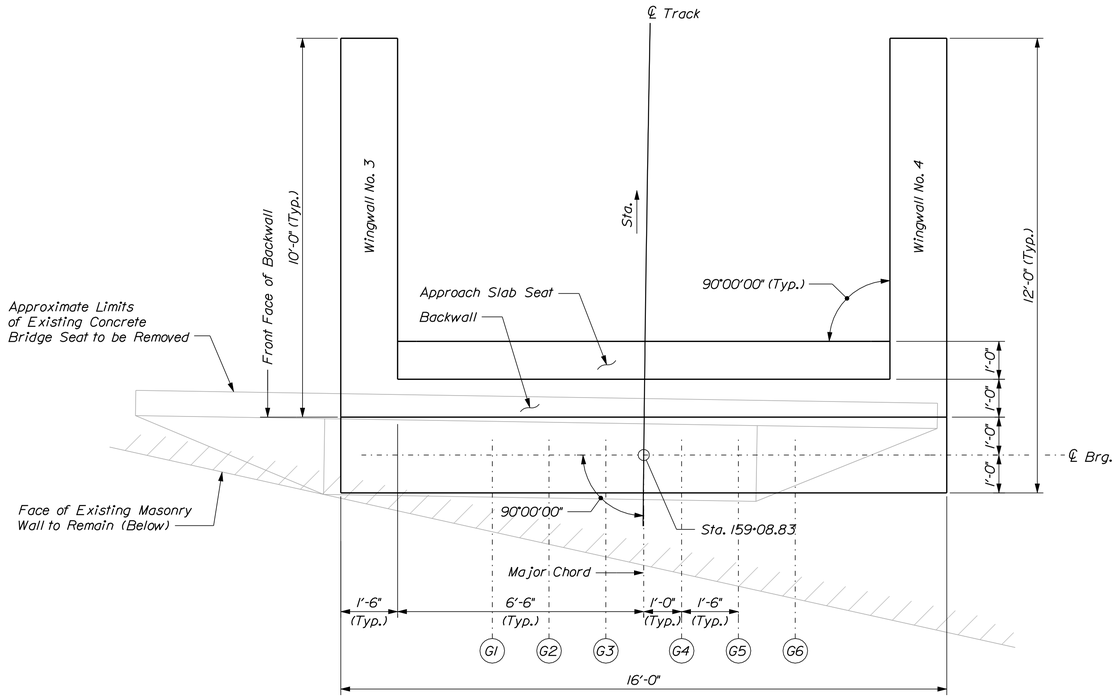

PLAN - ABUTMENT NO. 2

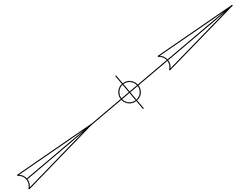

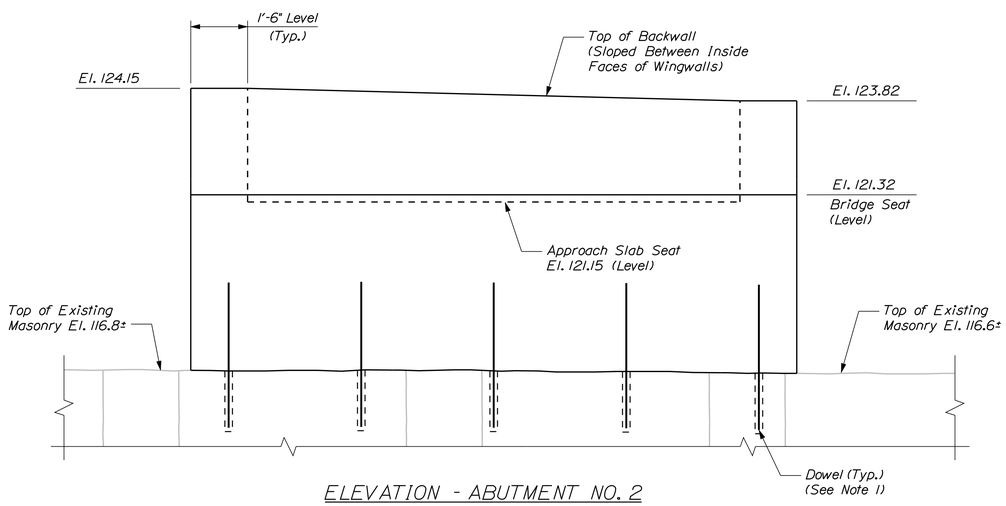

ELEVATION - ABUTMENT NO. 2

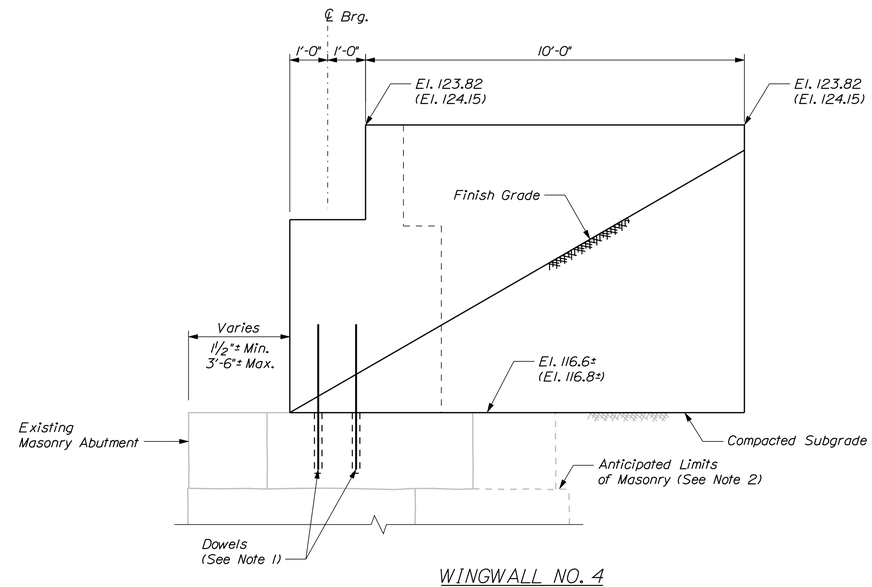

WINGWALL NO. 4

Wingwall No. 4 Shown. Wingwall No. 3 Similar but Opposite Hand
Elevations for Wingwall No. 3 Shown in Parenthesis Where Different

NOTE

1. Dowels for concrete to masonry connection. See Sheet 19 for additional information.

2. Limits of masonry are assumed based on limited geotechnical data. The Contractor shall verify limits during construction and notify the Resident of any conflicts.

STATE OF MAINE
DEPARTMENT OF TRANSPORTATION

-

BRIDGE NO. 0359

WIN
17860.03

BRIDGE PLANS

STATE OF MAINE
GREGORY S. GOODRICH
No. 13225
LICENSED
PROFESSIONAL ENGINEER

		BY	DATE
PROJ. MANAGER	C. BAKER		
DESIGN-DETAILED	LSC	BJM	4/29/13
CHECKED-REVIEWED	GSG	CDB	4/29/13
DESIGN2-DETAILED2	---	---	---
DESIGN3-DETAILED3	---	---	---
REVISIONS 1	---	---	---
REVISIONS 2	---	---	---
REVISIONS 3	---	---	---
REVISIONS 4	---	---	---
FIELD CHANGES	---	---	---

SIGNATURE
13225
P.E. NUMBER
MAY 10, 2013
DATE

MOUNTAIN DIVISION RAILROAD
MALLISON FALLS ROAD
WINDHAM CUMBERLAND COUNTY

ABUTMENT NO. 2 DETAILS

SHEET NUMBER
17
OF 27

Filename: ...\cad\st\planset\017_Abut2.dgn Division: Structures Username: kpreston Date:5/10/2013

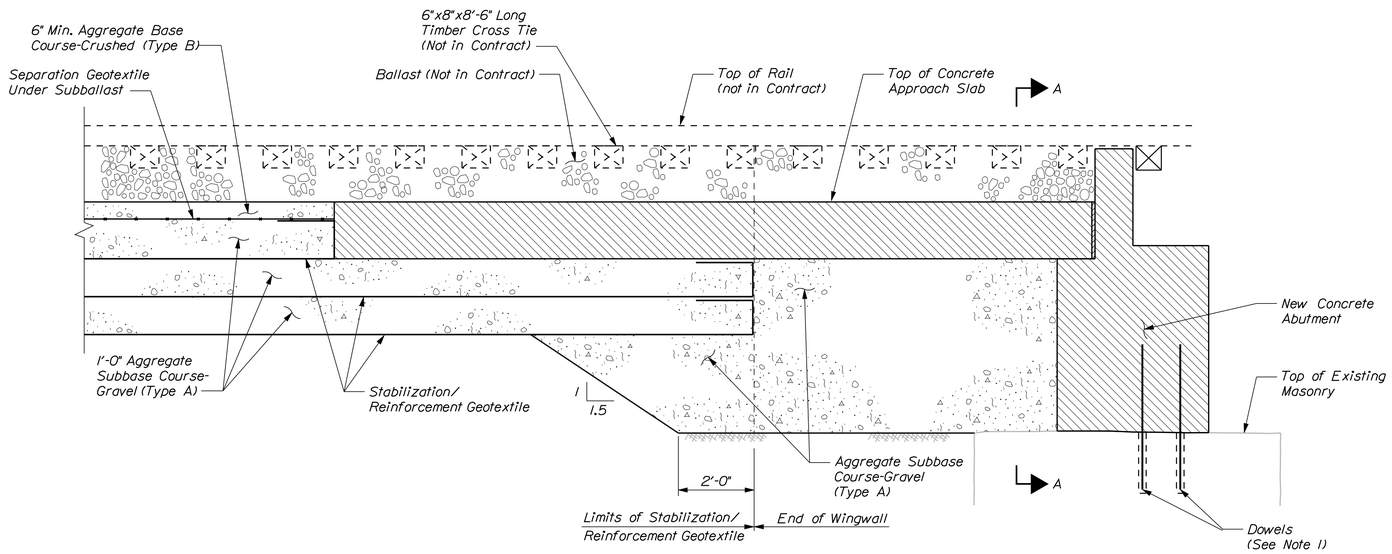

LONGITUDINAL SECTION

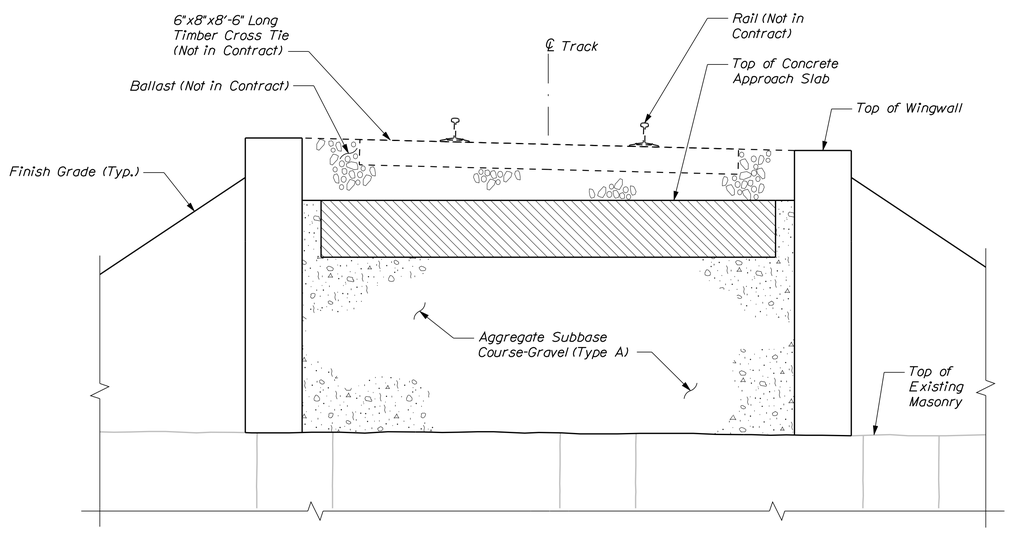

SECTION A-A

NOTE

1. Dowels for concrete to masonry connection. See Sheet 19 for additional information.

STATE OF MAINE
DEPARTMENT OF TRANSPORTATION

-

WIN 17860.03

BRIDGE NO. 0359

BRIDGE PLANS

STATE OF MAINE GREGORY S. GOODRICH No. 13225 LICENSED PROFESSIONAL ENGINEER

PROJ. MANAGER	C. BAKER	BY	DATE
DESIGN-DETAILED	LSC	BJM	4\29\13
CHECKED-REVIEWED	GSG	CDB	4\29\13
DESIGN2-DETAILED2	---	---	---
DESIGN3-DETAILED3	---	---	---
REVISIONS 1	---	---	---
REVISIONS 2	---	---	---
REVISIONS 3	---	---	---
REVISIONS 4	---	---	---
FIELD CHANGES	---	---	---

SIGNATURE 13225

P.E. NUMBER

MAY 10, 2013

DATE

MOUNTAIN DIVISION RAILROAD
MALLISON FALLS ROAD
WINDHAM CUMBERLAND COUNTY

MISCELLANEOUS ABUTMENT DETAILS

SHEET NUMBER

18

OF 27

Filename: ...\cad\st\planset\018_Detail.dgn Division: Structures Username: kpreston Date:5/10/2013

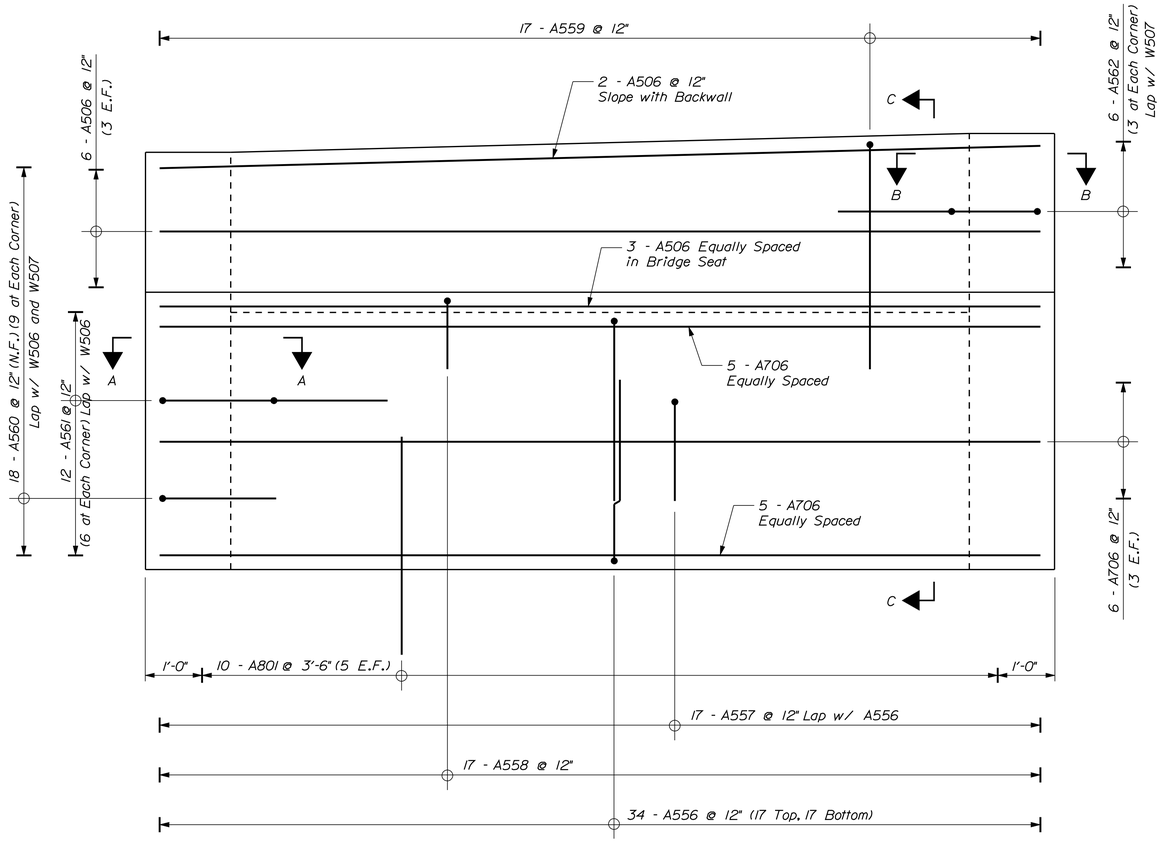

ABUTMENT ELEVATION

Abutment No. 1 Shown, Abutment No. 2 Similar
Substitute "B" for "A" for Abutment No. 2 Bar Marks

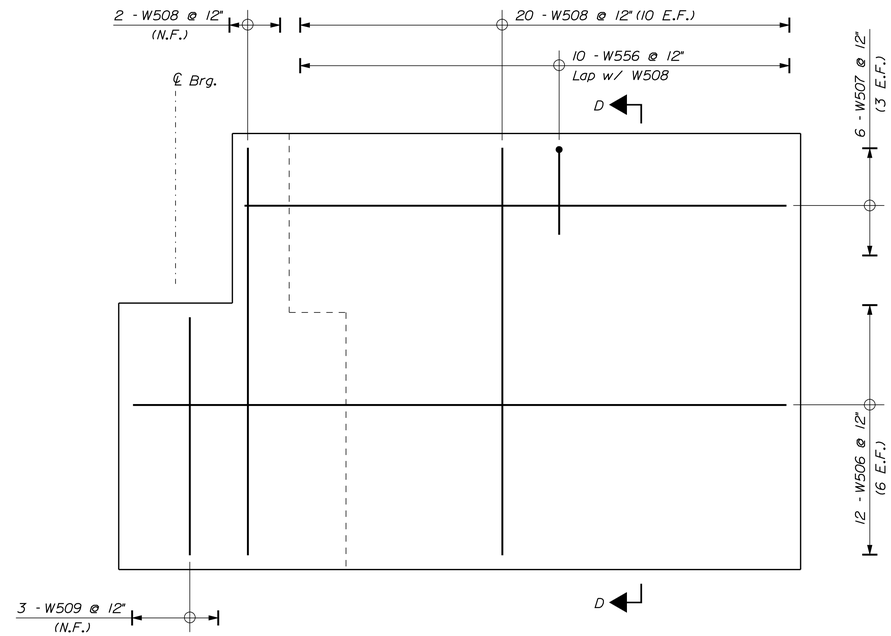

WINGWALL ELEVATION

Wingwall No. 2 Shown, Wingwalls No. 1, 3 & 4 Similar

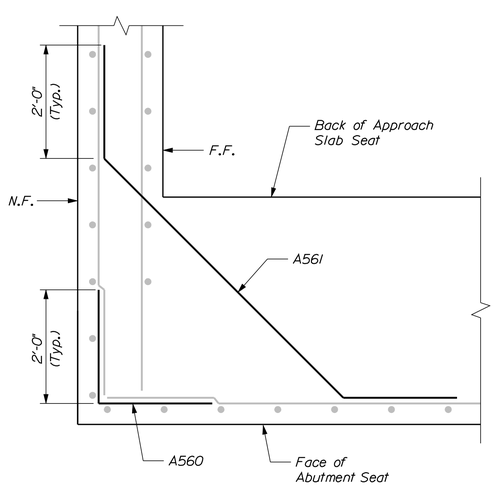

SECTION A-A

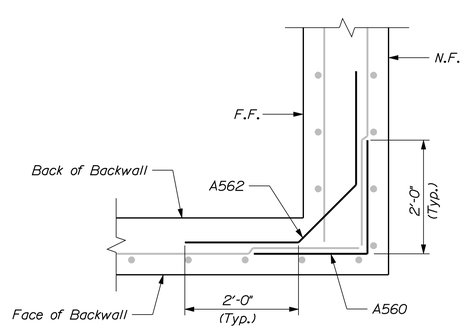

SECTION B-B

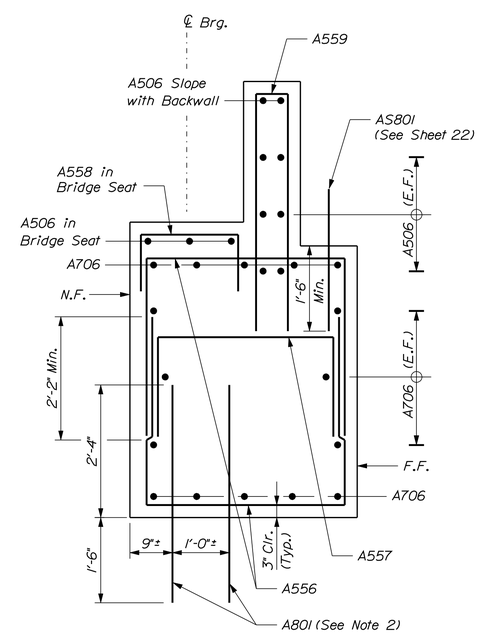

SECTION C-C

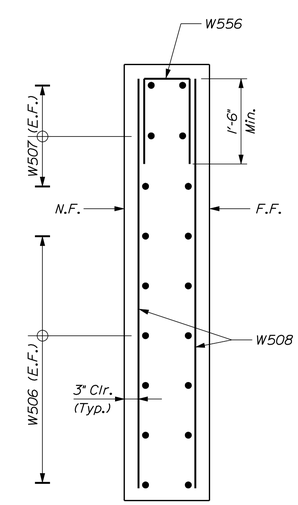

SECTION D-D

Reinforcing Key:
F.F. = Far Face
N.F. = Near Face
E.F. = Each Face

NOTE

1. Reinforcing steel shall have a minimum concrete cover of 3 inches.

2. The location of the dowels into the masonry abutment may be varied in the field based on actual block locations. Dowels should be a minimum of 6" from the face of masonry blocks.

STATE OF MAINE
DEPARTMENT OF TRANSPORTATION

BRIDGE NO. 0359 | WIN 17860.03 | BRIDGE PLANS

STATE OF MAINE GREGORY S. GOODRICH No. 13225 LICENSED PROFESSIONAL ENGINEER

		BY	DATE
PROJ. MANAGER	C. BAKER		
DESIGN-DETAILED	LSC	BJM	4\29\13
CHECKED-REVIEWED	GSG	CDB	4\29\13
DESIGN2-DETAILED2	---	---	---
DESIGN3-DETAILED3	---	---	---
REVISIONS 1	---	---	---
REVISIONS 2	---	---	---
REVISIONS 3	---	---	---
REVISIONS 4	---	---	---
FIELD CHANGES	---	---	---

SIGNATURE 13225
P.E. NUMBER MAY 10, 2013
DATE

MOUNTAIN DIVISION RAILROAD
MALLISON FALLS ROAD
WINDHAM CUMBERLAND COUNTY

ABUTMENT REINFORCING

SHEET NUMBER
19
OF 27

Filename: ...\st\planset\019_Abut Reinf.dgn Division: Structures Username: kpreston Date:5/10/2013

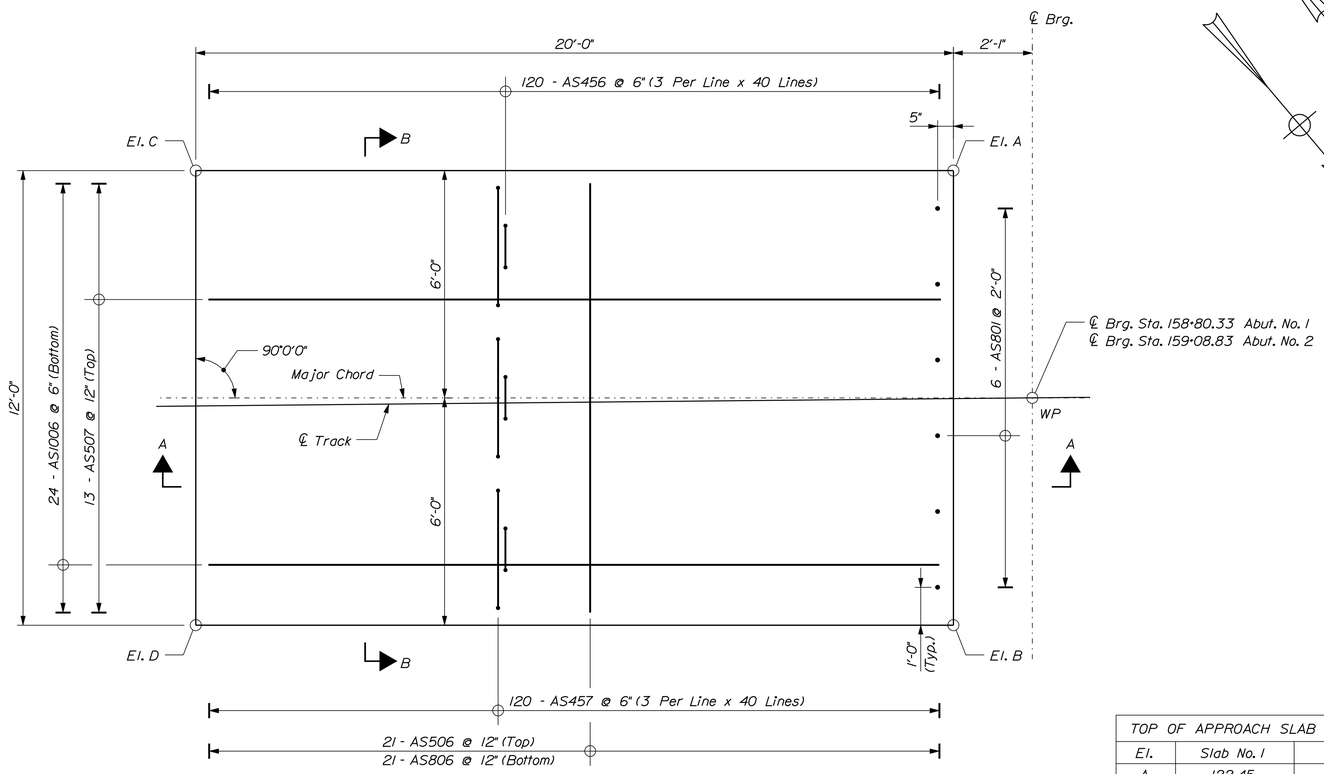

APPROACH SLAB NO. 1

Approach Slab No. 1 at Abutment No. 1 Shown, Approach Slab No. 2 at Abutment No. 2
Similar but Opposite Hand

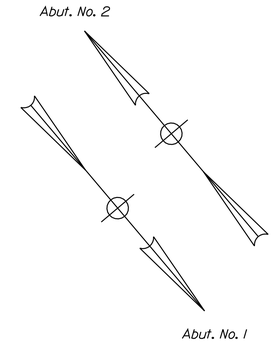

TOP OF APPROACH SLAB ELEVATIONS		
El.	Slab No. 1	Slab No. 2
A	122.45	122.65
B	122.45	122.65
C	122.20	122.40
D	122.20	122.40

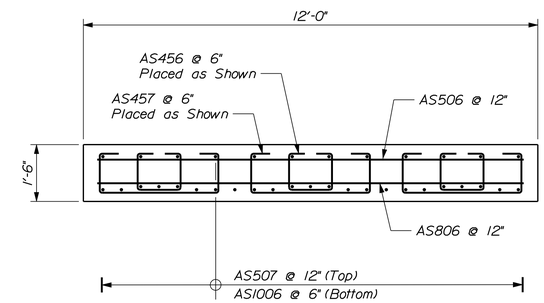

SECTION B-B

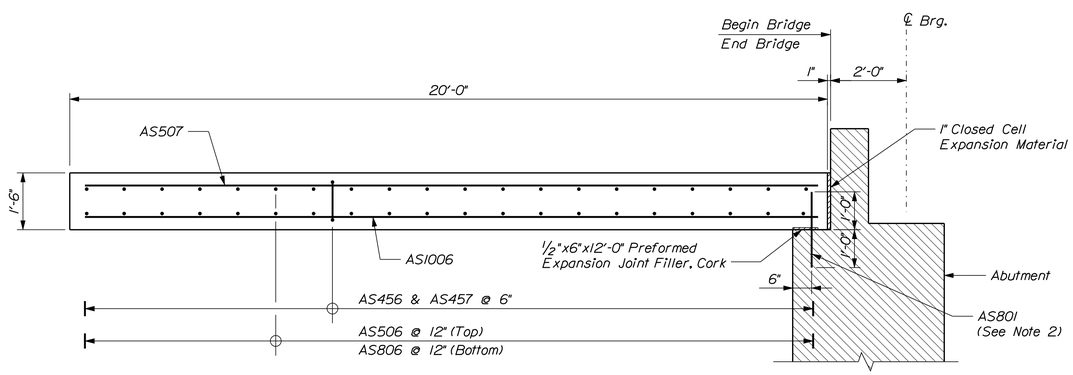

SECTION A-A

Approach Slab No. 1 at Abutment No. 1 Shown, Approach Slab No. 2 at Abutment No. 2
Similar but Opposite Hand

NOTES

1. Reinforcing steel shall have a minimum concrete cover of 3 inches.

2. Wrap approach slab end of dowels with pipe insulation or a similar bond breaking material (1/4" min. wall thickness).

STATE OF MAINE
DEPARTMENT OF TRANSPORTATION

-

BRIDGE PLANS

WIN 17860.03

BRIDGE NO. 0359

STATE OF MAINE
GREGORY S. GOODRICH
No. 13225
LICENSED PROFESSIONAL ENGINEER

SIGNATURE 13225

P.E. NUMBER

MAY 10, 2013

DATE

PROJ. MANAGER	C. BAKER		
DESIGN-DETAILED	LSC	BJM	4\29\13
CHECKED-REVIEWED	GSG	CDB	4\29\13
DESIGN2-DETAILED2	---	---	---
DESIGN3-DETAILED3	---	---	---
REVISIONS 1	---	---	---
REVISIONS 2	---	---	---
REVISIONS 3	---	---	---
REVISIONS 4	---	---	---
FIELD CHANGES	---	---	---

MOUNTAIN DIVISION RAILROAD
MALLISON FALLS ROAD
WINDHAM CUMBERLAND COUNTY

APPROACH SLAB DETAILS

SHEET NUMBER
20
OF 27

Filename: ...\cad\st\planset\020_Slab.dgn Division: Structures Username: kpreston Date:5/10/2013

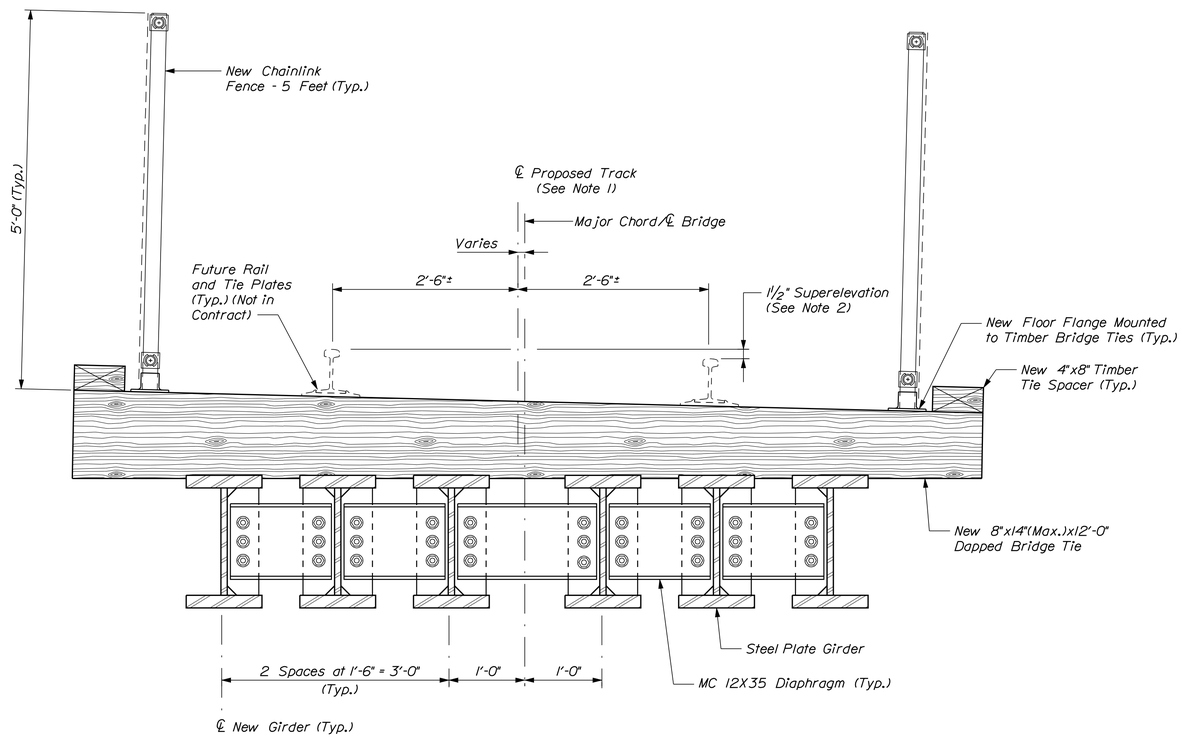

TYPICAL BRIDGE SECTION

STRUCTURAL STEEL NOTES

1. Bearing stiffeners shall be plumb after erection and dead loading of the structure.

2. Web stiffeners or diaphragm connection plates may be either plumb or normal to the top flange.

3. Filler plates may be steel conforming to the requirements of ASTM A 709/A 709M, Grade 36.

4. Girders shall be fabricated to zero camber plus tolerance.

NOTES

1. ℄ Track varies relative to major chord due to curved alignment.

2. Profile is given along top of low rail. Profile is approximate and must be adjusted when Future Rail and Tie Plates are installed.

CHAINLINK FENCE NOTES

1. The chainlink fence, including the posts, diagonal bracing and incidental hardware shall be paid for under Item 607.21, Chainlink Fence - 5 Feet. All materials will meet the requirements of Section 710.06. The chainlink fabric shall meet the material requirements of Section 710.03.

2. The fence posts shall be spaced per the manufacturer's requirements.

3. The fence posts shall be normal to the timber dapped ties and/or the timber tie spacer.

4. The floor flanges and all incidental hardware shall be specified as AASHTO M181 and galvanized in accordance with ASTM A153. The floor flanges shall be attached to the timber deck per the manufacturer's requirements. The floor flange hardware shall be designed to withstand wind and ice loads for the region or have a pull out strength greater or equal to the yield strength of the fence post.

5. Bracing at the fence corners shall be per the manufacturer's requirements and incidental to Item 607.21.

6. Gates for the chainlink fence will paid for under Item 607.2317, Chainlink Fence Gate 5'x4' Opening. At gateways, no additional payment will be made for gate posts or bracing assemblies. All gate material shall meet the requirements of Section 710.03 and 710.06.

7. Gate shall be furnished with a standard fork latch and one piece of 1/4" straight link alloy steel chain, 2 feet long. One end shall be attached to the gate frame and attached to the other end shall be a keyed lock or other approved locking device. One key shall be made to use for both locks. The key shall be given to the Maine Department of Transportation.

STATE OF MAINE
DEPARTMENT OF TRANSPORTATION

-

BRIDGE NO. 0359

WIN 17860.03

BRIDGE PLANS

STATE OF MAINE GREGORY S. GOODRICH No. 13225 LICENSED PROFESSIONAL ENGINEER

PROJ. MANAGER	C. BAKER	BY	DATE
DESIGN-DETAILED	LSC	BJM	5/10/13
CHECKED-REVIEWED	GSG	CDB	5/10/13
DESIGN2-DETAILED2	---	---	---
DESIGN3-DETAILED3	---	---	---
REVISIONS 1	---	---	---
REVISIONS 2	---	---	---
REVISIONS 3	---	---	---
REVISIONS 4	---	---	---
FIELD CHANGES	---	---	---

SIGNATURE

13225

P.E. NUMBER

MAY 10, 2013

DATE

MOUNTAIN DIVISION RAILROAD
MALLISON FALLS ROAD
WINDHAM CUMBERLAND COUNTY

TYPICAL BRIDGE SECTION

SHEET NUMBER

21

OF 27

Filename: ...\cad\st\planset\021_b_typ.dgn Division: Structures Username: kpreston Date:5/10/2013

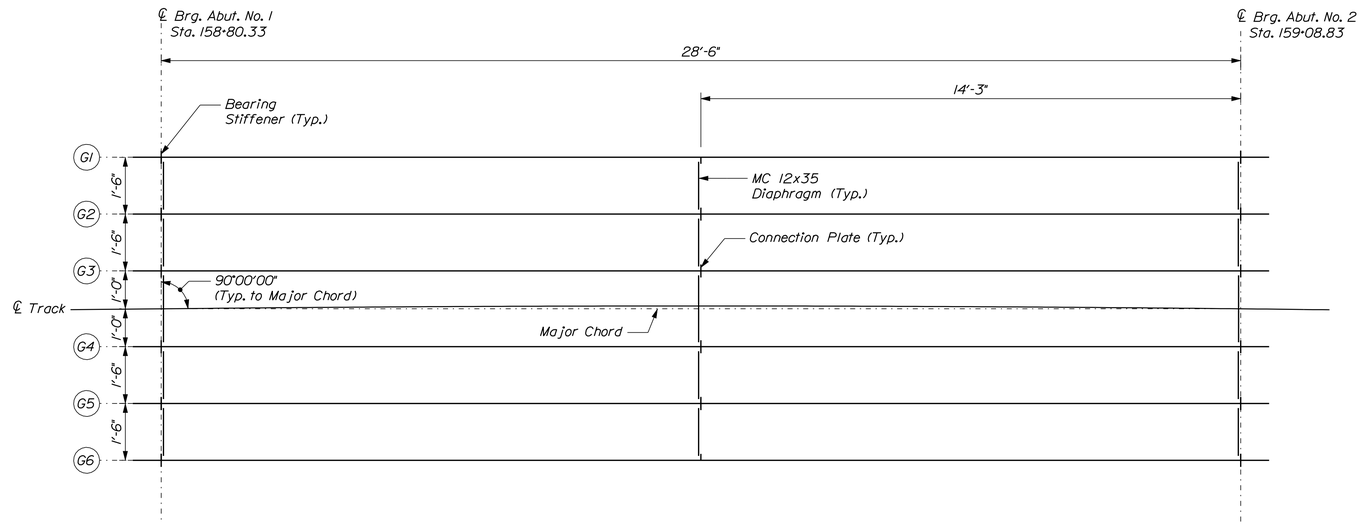

FRAMING PLAN

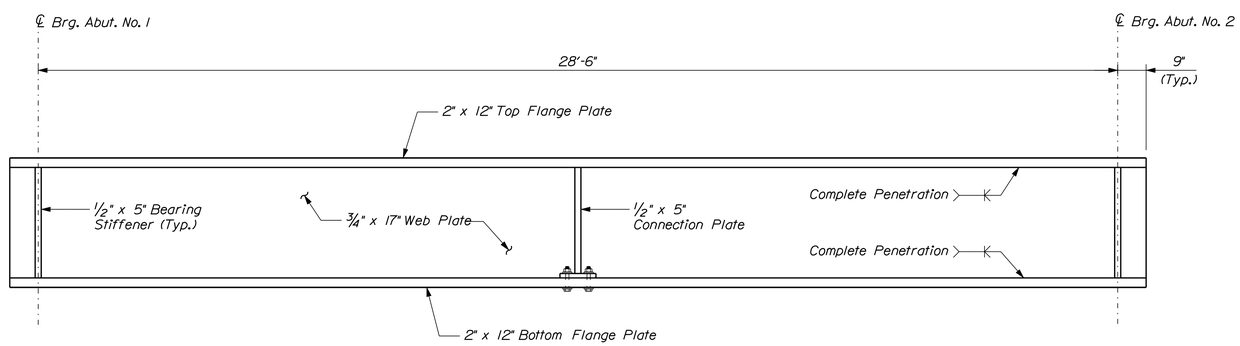

GIRDER ELEVATION

STATE OF MAINE
DEPARTMENT OF TRANSPORTATION

-

WIN 17860.03

BRIDGE NO. 0359

BRIDGE PLANS

STATE OF MAINE
GREGORY S. GOODRICH
No. 13225
LICENSED PROFESSIONAL ENGINEER

PROJ. MANAGER	C. BAKER	BY	DATE
DESIGN-DETAILED	LSC	BJM	4\29\13
CHECKED-REVIEWED	GSG	CDB	4\29\13
DESIGN2-DETAILED2	---	---	---
DESIGN3-DETAILED3	---	---	---
REVISIONS 1	---	---	---
REVISIONS 2	---	---	---
REVISIONS 3	---	---	---
REVISIONS 4	---	---	---
FIELD CHANGES	---	---	---

SIGNATURE

13225

P.E. NUMBER

MAY 10, 2013

DATE

MOUNTAIN DIVISION RAILROAD
MALLISON FALLS ROAD
WINDHAM CUMBERLAND COUNTY

FRAMING PLAN AND GIRDER ELEVATION

SHEET NUMBER

22

OF 27

Filename: ...\planset\022_Framing Plan.dgn Division: Structures Username: kpreston Date:5/10/2013

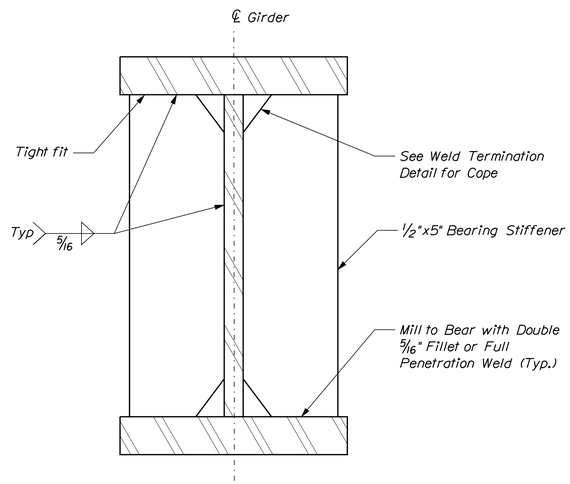

BEARING STIFFENER DETAIL

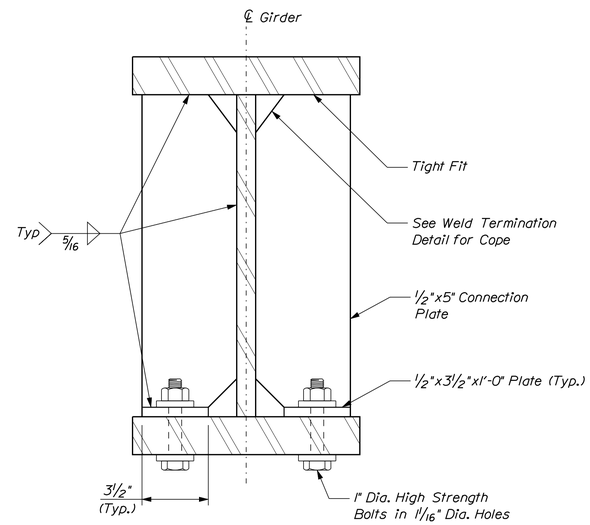

CONNECTION PLATE DETAIL

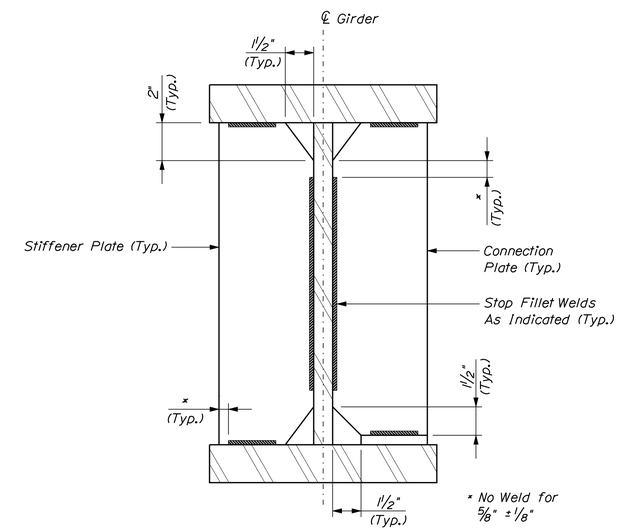

WELD TERMINATION AND COPING DETAIL

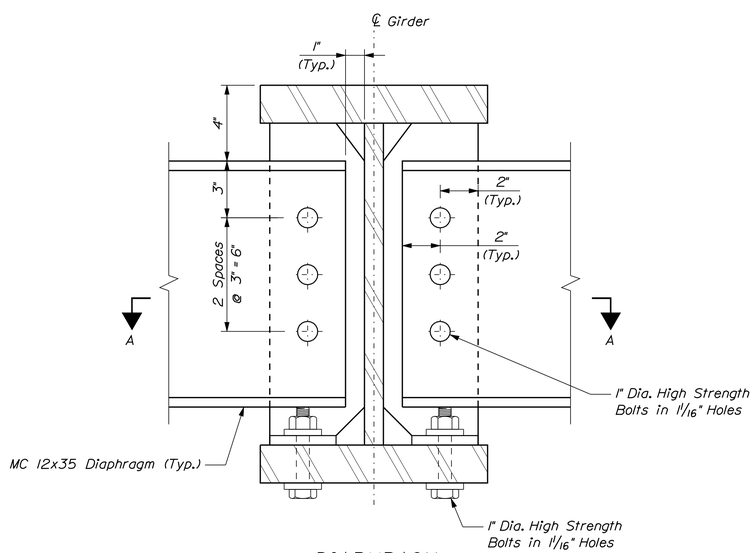

DIAPHRAGM

(Attachment of Diaphragm to Connection Plate shown. Attachment of Diaphragm to Bearing Stiffener Similar)

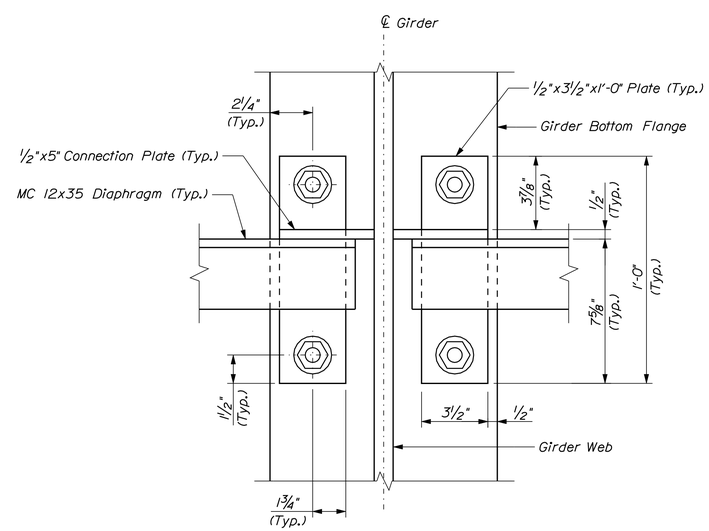

SECTION A-A

STATE OF MAINE
DEPARTMENT OF TRANSPORTATION

-

WIN 17860.03

BRIDGE NO. 0359

BRIDGE PLANS

STATE OF MAINE GREGORY S. GOODRICH No. 13225 LICENSED PROFESSIONAL ENGINEER

PROJ. MANAGER	C. BAKER	BY	DATE
DESIGN-DETAILED	LSC	BJM	4\29\13
CHECKED-REVIEWED	GSG	CDB	4\29\13
DESIGN2-DETAILED2	---	---	---
DESIGN3-DETAILED3	---	---	---
REVISIONS 1	---	---	---
REVISIONS 2	---	---	---
REVISIONS 3	---	---	---
REVISIONS 4	---	---	---
FIELD CHANGES	---	---	---

SIGNATURE 13225

P.E. NUMBER

MAY 10, 2013

DATE

MOUNTAIN DIVISION RAILROAD
MALLISON FALLS ROAD
WINDHAM CUMBERLAND COUNTY

SUPERSTRUCTURE DETAILS

SHEET NUMBER

23

OF 27

Filename: ...\cad\st\planset\023_Detail.dgn Division: Structures Username: kpreston Date:5/10/2013

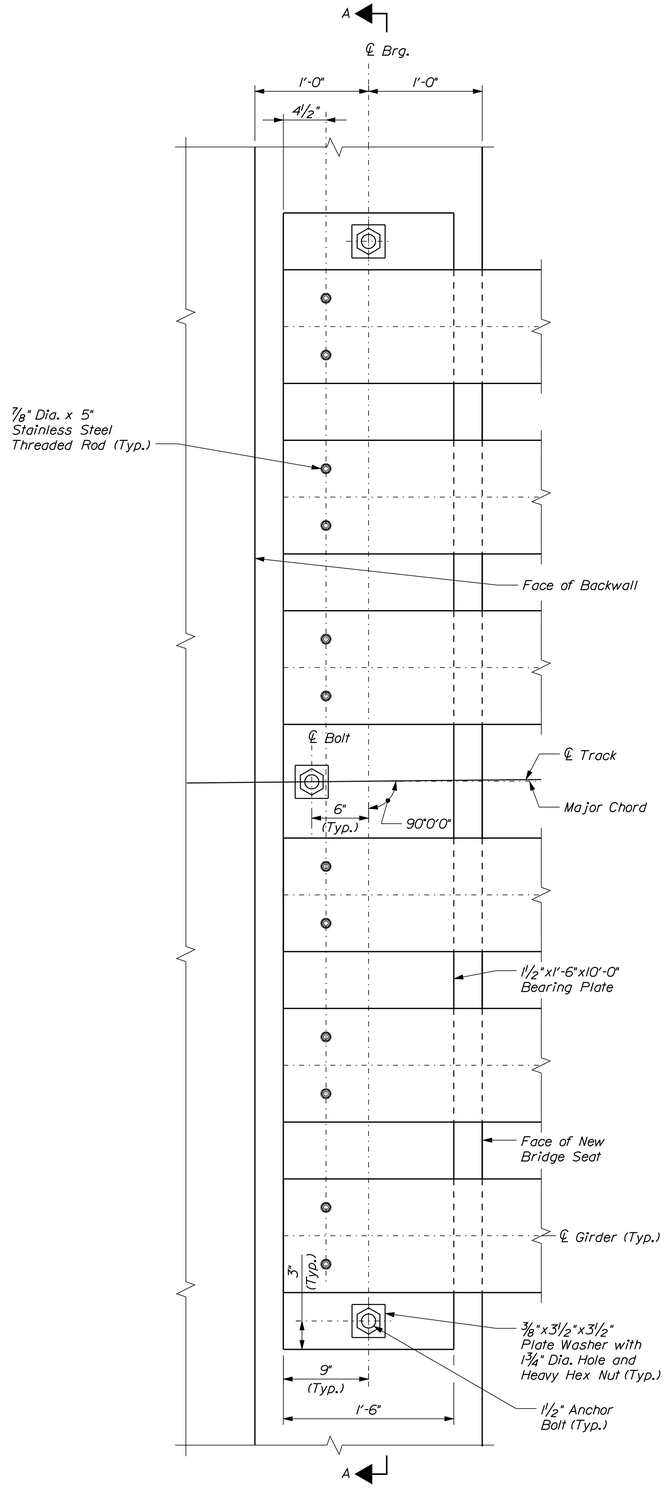

PLAN

(Typical Both Abutments)

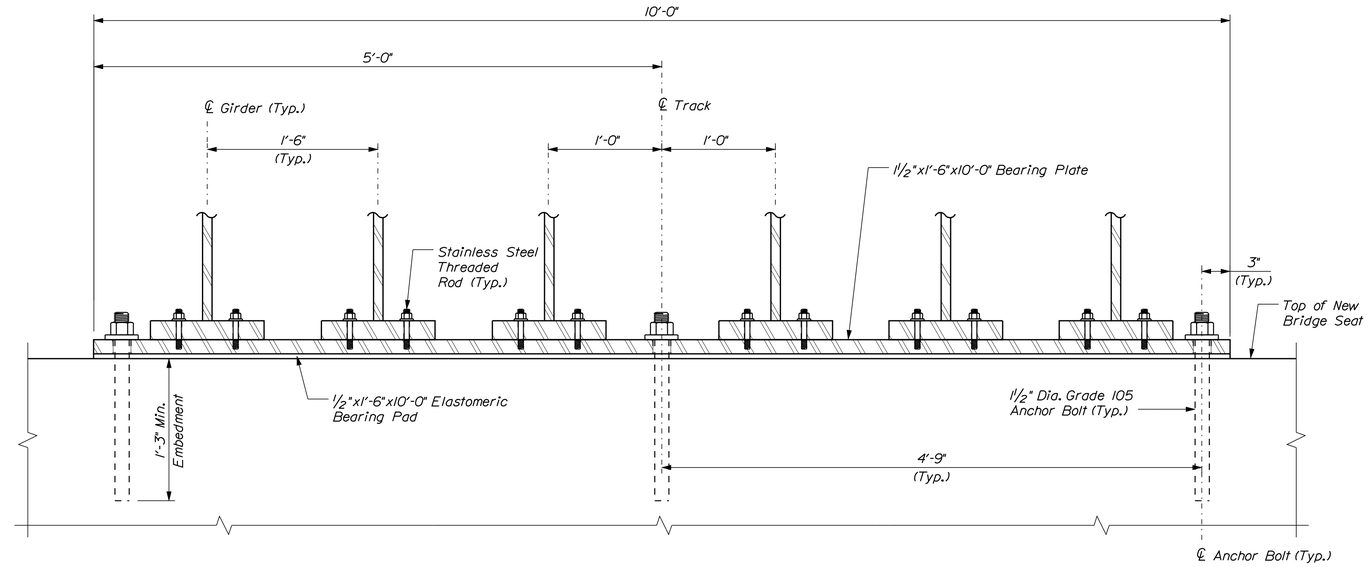

SECTION A-A

(Diaphragms and Bearing Stiffeners not Shown for Clarity)

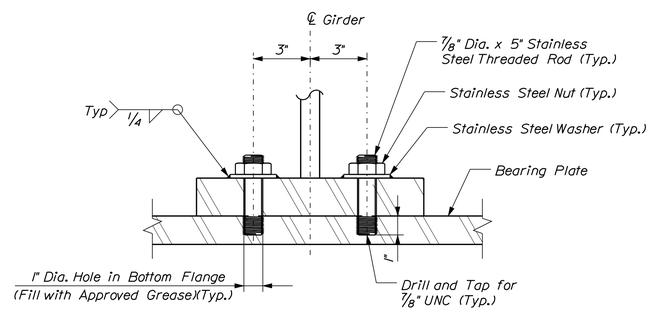

STAINLESS STEEL THREADED ROD DETAIL

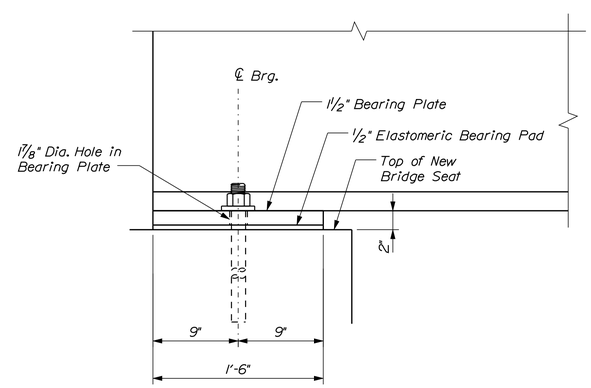

ELEVATION

BEARING NOTES

1. Elastomeric Bearing Pads shall be made from a 60 Durometer natural virgin rubber or neoprene elastomer.

2. Bearing plates shall meet the requirements of ASTM A 709/A 709M, Grade 50W. Anchor bolts shall meet the requirements of ASTM F 1554, Grade 105 and shall be swedged on the embedded portion of the bolt.

3. Anchor bolts, washers, and nuts shall be galvanized to ASTM A 153 or ASTM B 695, Class 50, Type 1.

4. All bearings shall be marked prior to shipping. The marks shall include the bearing location on the bridge and a direction arrow which points upstation. All marks shall be permanent.

5. Bearings shall be covered during transit.

6. All necessary precautions shall be taken to protect bearing components from field weld flash and spatter. Heat from welding operations shall be controlled such that steel adjacent to the elastomer does not exceed 200 °F. The temperature shall be verified by the use of temperature indicating crayons or other suitable means.

7. Upset the threads on the anchor rods after assembly of the bearing.

8. Stainless steel threaded rods shall meet the requirements of ASTM A193 Grade B8M, Class 2. Stainless steel nuts shall meet the requirements of ASTM A194, Grade 8M and stainless steel washers shall be SS316.

STATE OF MAINE
DEPARTMENT OF TRANSPORTATION

-

WIN 17860.03

BRIDGE NO. 0359

BRIDGE PLANS

STATE OF MAINE GREGORY S. GOODRICH No. 13225 LICENSED PROFESSIONAL ENGINEER

SIGNATURE	13225	P.E. NUMBER	
DATE		MAY 10, 2013	

PROJ. MANAGER	C. BAKER	BY	DATE
DESIGN-DETAILED	LSC	BJM	5/10/13
CHECKED-REVIEWED	GSG	CDB	5/10/13
DESIGN2-DETAILED2	---	---	---
DESIGN3-DETAILED3	---	---	---
REVISIONS 1	---	---	---
REVISIONS 2	---	---	---
REVISIONS 3	---	---	---
REVISIONS 4	---	---	---
FIELD CHANGES	---	---	---

MOUNTAIN DIVISION RAILROAD
MALLISON FALLS ROAD
WINDHAM CUMBERLAND COUNTY

BEARING DETAILS

SHEET NUMBER

24

OF 27

Filename: ...\cad\st\planset\024_Brg.dgn Division: Structures Username: kpreston Date:5/10/2013

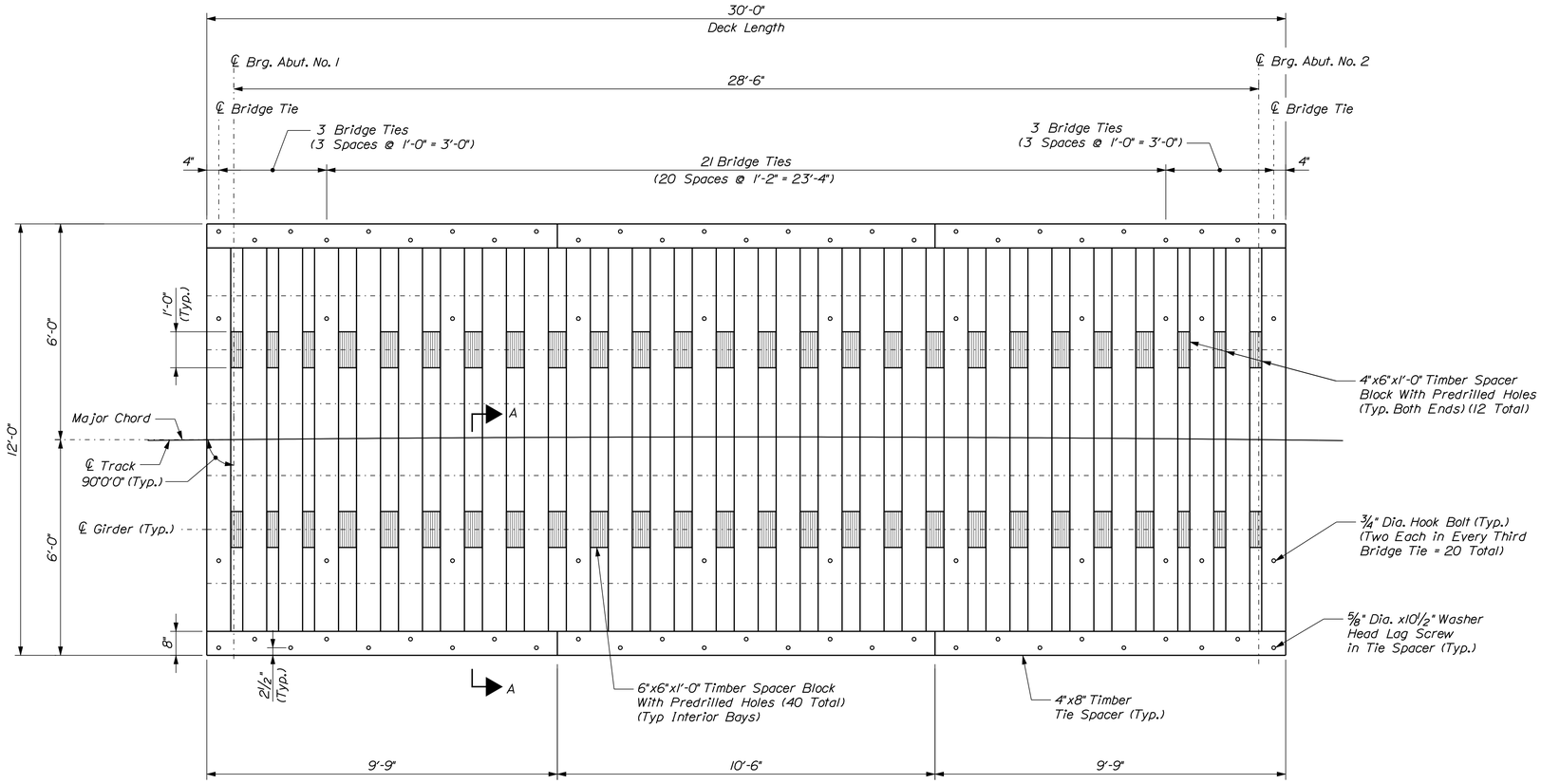

DECK PLAN

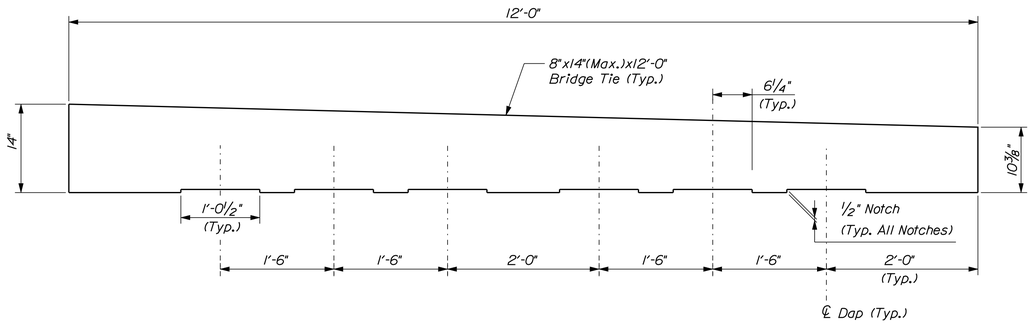

TYPICAL DAPPED BRIDGE TIE

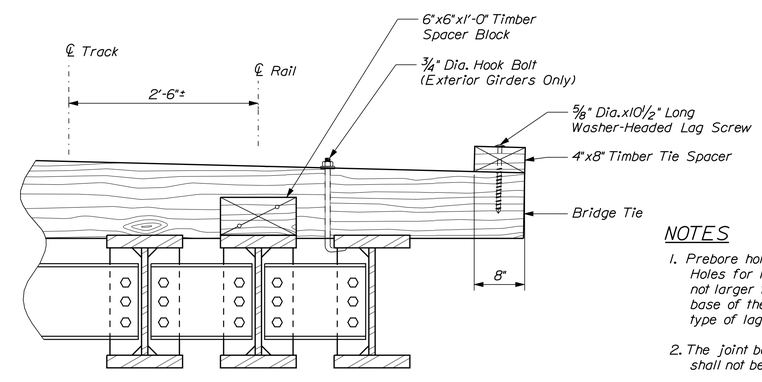

SECTION A-A

NOTES

1. Prebore holes for all lag screws and hook bolts. Holes for lag screws shall be bored with a bit not larger than the body of the screw at the base of the thread. See Special Provisions for type of lag screws and hook bolts required.
2. The joint between abutting timber tie spacers shall not be placed on a bridge tie.
3. Nail each timber spacer block to at least one bridge tie with 8" ring shank nails. Spacer blocks shall be cut to fit where indicated in deck plan.
4. All costs for the complete timber deck shall be included in Item 528.4903, Bridge Ties and Timbers (Railroad Bridge), including bridge ties, tie spacers, tie spacer blocks, hook bolts, lag screws, nails, and any other required materials.

STATE OF MAINE
DEPARTMENT OF TRANSPORTATION

-

WIN
17860.03

BRIDGE PLANS

BRIDGE NO. 0359

STATE OF MAINE
GREGORY S. GOODRICH
No. 13225
LICENSED
PROFESSIONAL ENGINEER

PROJ. MANAGER	C. BAKER		
DESIGN-DETAILED	LSC	BJM	5/10/13
CHECKED-REVIEWED	GSG	CDB	5/10/13
DESIGN2-DETAILED2	---	---	---
DESIGN3-DETAILED3	---	---	---
REVISIONS 1	---	---	---
REVISIONS 2	---	---	---
REVISIONS 3	---	---	---
REVISIONS 4	---	---	---
FIELD CHANGES	---	---	---

SIGNATURE

13225

P.E. NUMBER

MAY 10, 2013

DATE

MOUNTAIN DIVISION RAILROAD
MALLISON FALLS ROAD
WINDHAM CUMBERLAND COUNTY

DECK DETAILS

SHEET NUMBER

25

OF 27

Filename: ...\cad\st\planset\025_Deck.dgn Division: Structures Username: kpreston Date:5/10/2013

STRAIGHT BARS

MARK	QTY.	LENGTH	LOCATION	MARK	QTY.	LENGTH	LOCATION
			ABUTMENT NO. 1				
A506	11	15'-6"					
A706	16	15'-6"					
A801	10	3'-10"					
			ABUTMENT NO. 2				
B506	11	15'-6"					
B706	16	15'-6"					
B801	10	3'-10"					
			WINGWALL NO. 1				
1W506	12	11'-6"					
1W507	6	9'-6"					
1W508	22	6'-9"					
1W509	3	4'-2"					
			WINGWALL NO. 2				
2W506	12	11'-6"					
2W507	6	9'-6"					
2W508	22	7'-1"					
2W509	3	4'-2"					
			WINGWALL NO. 3				
3W506	12	11'-6"					
3W507	6	9'-6"					
3W508	22	6'-11"					
3W509	3	4'-0"					
			WINGWALL NO. 4				
4W506	12	11'-6"					
4W507	6	9'-6"					
4W508	22	6'-7"					
4W509	3	4'-0"					
			APPROACH SLAB NO. 1				
1AS506	21	11'-6"					
1AS507	13	19'-6"					
1AS801	6	2'-0"					
1AS806	21	11'-6"					
1AS1006	24	19'-6"					
			APPROACH SLAB NO. 2				
2AS506	21	11'-6"					
2AS507	13	19'-6"					
2AS801	6	2'-0"					
2AS806	21	11'-6"					
2AS1006	24	19'-6"					

BENT BARS

MARK	QTY.	LENGTH	TYPE	A	B	C	D	E	F	G	H	O	R	LOCATION
														ABUTMENT NO. 1
A556	34	9'-10"	SL	-	3'-2"	3'-6"	3'-2"			-				
A557	17	7'-10"	SL	-	2'-2"	3'-6"	2'-2"			-				
A558	17	3'-6"	SL	-	1'-0"	1'-6"	1'-0"			-				
A559	17	9'-0"	SL	-	4'-3"	0'-6"	4'-3"			-				
A560	18	4'-0"	SL	-	-	2'-0"	2'-0"			-				
A561	12	8'-11"	FE	2'-0"	4'-11"	2'-0"								
A562	6	6'-2"	FE	2'-0"	2'-2"	2'-0"								
														ABUTMENT NO. 2
B556	34	9'-10"	SL	-	3'-2"	3'-6"	3'-2"			-				
B557	17	7'-10"	SL	-	2'-2"	3'-6"	2'-2"			-				
B558	17	3'-6"	SL	-	1'-0"	1'-6"	1'-0"			-				
B559	17	9'-0"	SL	-	4'-3"	0'-6"	4'-3"			-				
B560	18	4'-0"	SL	-	-	2'-0"	2'-0"			-				
B561	12	8'-11"	FE	2'-0"	4'-11"	2'-0"								
B562	6	6'-2"	FE	2'-0"	2'-2"	2'-0"								
														WINGWALL NO. 1
1W556	10	4'-0"	SL	-	1'-6"	1'-0"	1'-6"			-				
														WINGWALL NO. 2
2W556	10	4'-0"	SL	-	1'-6"	1'-0"	1'-6"			-				
														WINGWALL NO. 3
3W556	10	4'-0"	SL	-	1'-6"	1'-0"	1'-6"			-				
														WINGWALL NO. 4
4W556	10	4'-0"	SL	-	1'-6"	1'-0"	1'-6"			-				
														APPROACH SLAB NO. 1
1AS456	120	4'-0"	SM	0'-6"	1'-0"	1'-0"	1'-0"	0'-6"						
1AS457	120	6'-0"	SM	0'-6"	1'-0"	3'-0"	1'-0"	0'-6"						
														APPROACH SLAB NO. 2
2AS456	120	4'-0"	SM	0'-6"	1'-0"	1'-0"	1'-0"	0'-6"						
2AS457	120	6'-0"	SM	0'-6"	1'-0"	3'-0"	1'-0"	0'-6"						

TYPE - BENDING DIAGRAMS

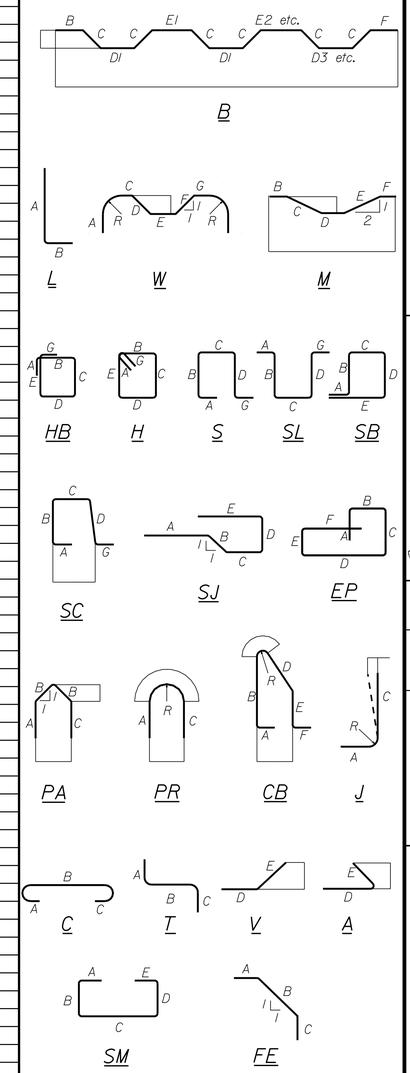

All dimensions are out-to-out of bar.

Bending details and hooks shall conform to the recommendations of the current revision of ACI Standard 315 and ACI Standard 318.

Reinforcing Bar: ASTM A615/A615M, Grade 60

GENERAL NOTES

1. The first two digits following the letter(s) of the mark indicate the size of the bar:

   Mark "A502" = bar size #5
   Mark "P805" = bar size #8
   Mark "S650" = bar size #6

2. Each crank bar, Type B, may be replaced by two (2) straight bars (one top and one bottom) of the same bar size as the crank bar. Payment in either case shall be based on crank bars as schedule on the plans.

STATE OF MAINE
DEPARTMENT OF TRANSPORTATION

-

BRIDGE PLANS

WIN 17860.03

BRIDGE NO. 0359

STATE OF MAINE GREGORY S. GOODRICH No. 13225 LICENSED PROFESSIONAL ENGINEER

	BY	DATE
PROJ. MANAGER		
DESIGN-DETAILED	CLC	4\29\13
CHECKED-REVIEWED	CGG	4\29\13
DESIGN2-DETAILED2	---	---
DESIGN3-DETAILED3	---	---
REVISIONS 1	---	---
REVISIONS 2	---	---
REVISIONS 3	---	---
REVISIONS 4	---	---
FIELD CHANGES	---	---

C. BAKER

SIGNATURE

13225

P.E. NUMBER

MAY 10, 2013

DATE

MOUNTAIN DIVISION RAILROAD
MALLISON FALLS ROAD
WINDHAM CUMBERLAND COUNTY

REINFORCING STEEL SCHEDULE

SHEET NUMBER

26

OF 27

Filename: ...\st\planset\026_Rebar Sch.dgn Division: Structures Username: kpreston Date:5/10/2013

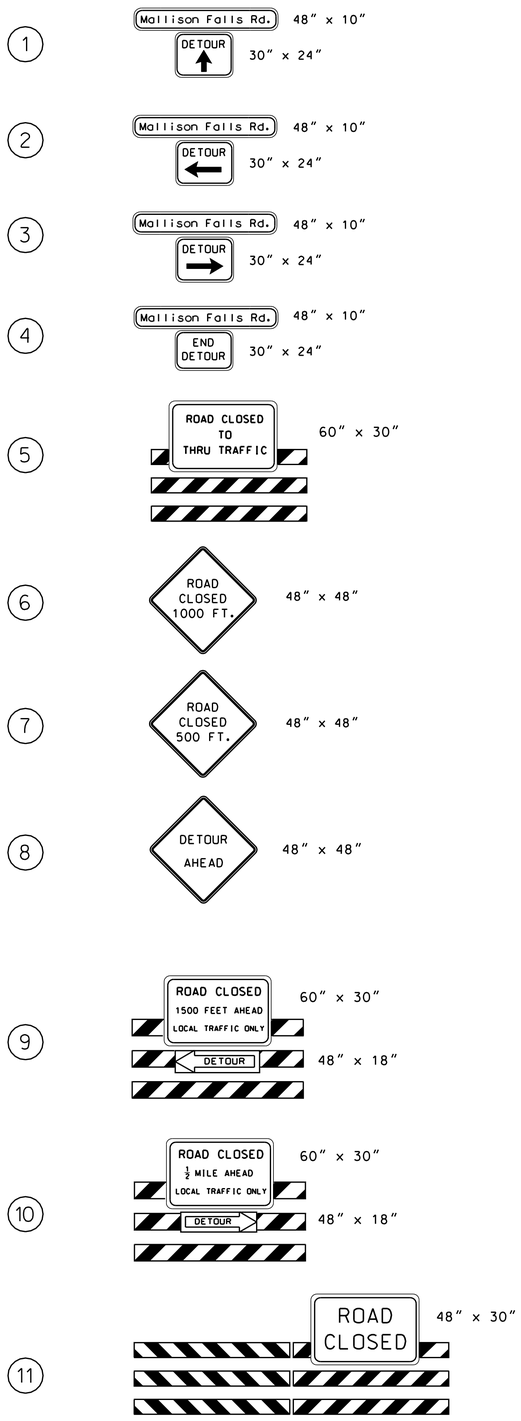

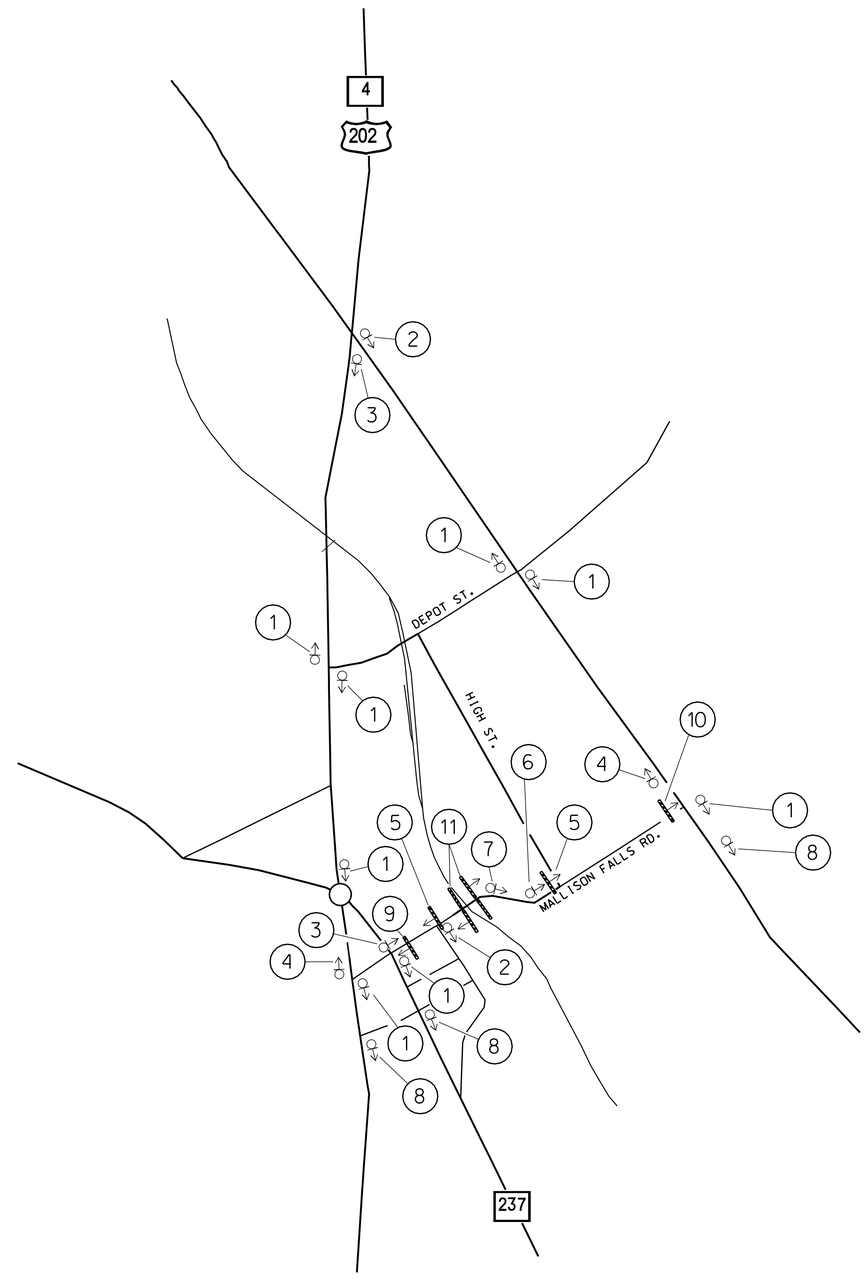

NOTE:

1. Construction signs, barricades, cones, drums, and maintenance of traffic control devices shall be paid for under their respective item numbers. Payment for all other material and labor related to the Detour and all other traffic control devices needed for the project shall be considered incidental to related contract items.

STATE OF MAINE
DEPARTMENT OF TRANSPORTATION

-

BRIDGE NO. 0359 | WIN 17860.03 | BRIDGE PLANS

PROJ. MANAGER	C. BAKER	BY	DATE
DESIGN-DETAILED	MaineDOT	MaineDOT	4\29\13
CHECKED-REVIEWED	MaineDOT	MaineDOT	4\29\13
DESIGN2-DETAILED2	---	---	---
DESIGN3-DETAILED3	---	---	---
REVISIONS: 1	---	---	---
REVISIONS: 2	---	---	---
REVISIONS: 3	---	---	---
REVISIONS: 4	---	---	---
FIELD CHANGES	---	---	---

SIGNATURE

P.E. NUMBER

DATE

MOUNTAIN DIVISION RAILROAD
MALLISON FALLS ROAD
WINDHAM CUMBERLAND COUNTY

TRAFFIC CONTROL PLAN

SHEET NUMBER
27
OF 27

Filename: ...\027_Traffic Control.dgn Division: Structures Username: kpreston Date:5/10/2013