STATE OF MAINE
DEPARTMENT OF TRANSPORTATION

MAINE STATE VISITOR INFORMATION CENTER IMPROVEMENTS

017060.05

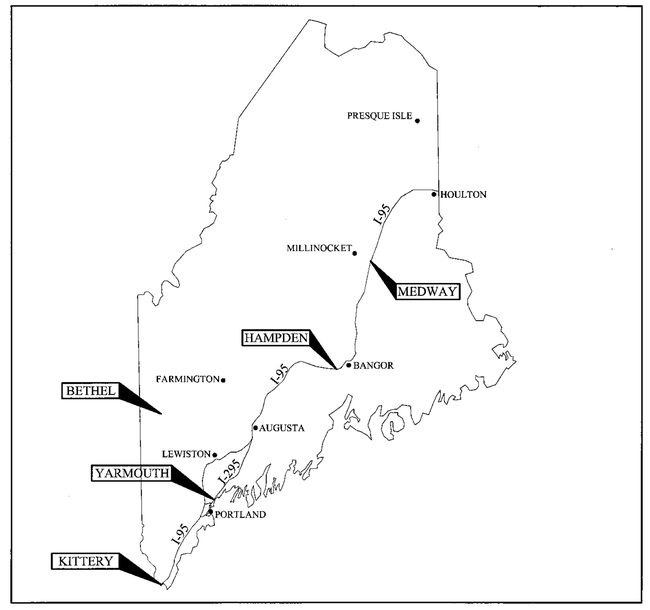

LIST OF DRAWINGS

TITLE SHEET.....1
MEDWAY VIC - I-95 NORTHBOUND & SOUTHBOUND.....2
HAMPDEN VIC - I-95 NORTHBOUND & SOUTHBOUND.....3
BETHEL VIC - MAIN & SIDE ENTRANCES.....4
KITTERY VIC - EAST & WEST ENTRANCES.....5
YARMOUTH - MAIN ENTRANCE.....6

STATE OF MAINE
DEPARTMENT OF TRANSPORTATION

APPROVED	DATE
COMMISSIONER:	3/15/13
CHIEF ENGINEER:	3/14/13

	BY	DATE
DESIGN DETAILED	TD	1-30-13
CHECKED REVIEWED	ED	1-30-13
REVISION 1		
REVISION 2		
REVISION 3		
FIELD CHANGES		

ME - 12630
PE NUMBER

3-1-13
DATE

MAINE STATE VIC IMPROVEMENTS

TITLE SHEET

SHEET NUMBER

1

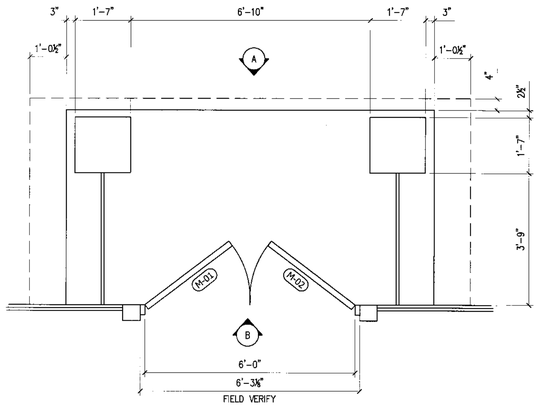

DOOR AND FRAME NOTES

1. MATCH EXISTING DOOR HINGE LOCATIONS, TYP. ALL NEW DOORS SHALL HAVE NEW HINGES
2. PROVIDE HOLD OPEN DEVICES AND KICK PLATES ON ALL DOORS, TYP.
3. AT FRAMES TO REMAIN, GRIND RUST AND DEBRIS, PATCH AND FILL ALL HOLES, AND PAINT TO MATCH EXISTING FRAME COLOR.
4. REPLACE ALL EXTERIOR THRESHOLDS WITH NEW THRESHOLDS. MAXIMUM 1/2" REVEAL FROM FLOORING TO MEET ADA.
5. ALL DOOR HARDWARE SHALL MEET ADA.
6. VERIFY ALL DIMENSIONS IN FIELD PRIOR TO ORDERING AND MANUFACTURING.

NOTE:
PROVIDE NEW ADA AUTOMATIC DOOR OPENER (SINGLE LEAF ONLY) ON EXTERIOR AND INTERIOR DOOR. EXTERIOR AND INTERIOR CONTROL BUTTONS SHALL BE PROGRAMMED TO OPEN BOTH EXTERIOR AND INTERIOR DOOR LEAFS AT THE SAME TIME. THE OPENER SHALL BE MOUNTED ON THE RIGHT HAND LEAF AS THE PERSON IS ENTERING. THIS POSITION MAY BE MOVED TO THE LEFT HAND LEAFT ONLY IF EXISTING CONDITIONS PROHIBIT INSTALLATION ON THE PREFERRED LEAF AND APPROVAL IS GRANTED BY THE DEPARTMENT.

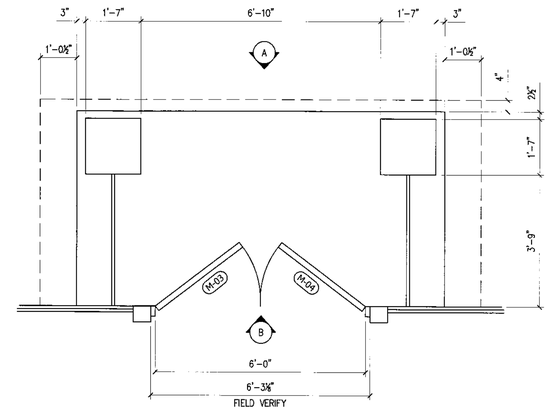

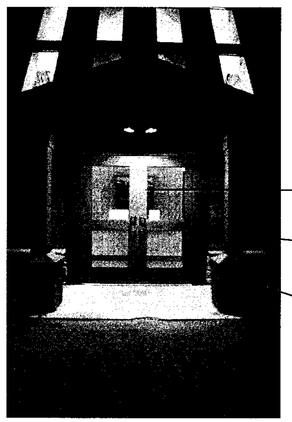

VIEW A

VIEW B

REMOVE AND REPLACE WITH NEW STEEL DOORS

EXISTING FRAME TO REMAIN, NEW PAINT TO MATCH EXISTING, TYP

REMOVE EXISTING RUST, PRIME AND PAINT EXISTING FRAME

1 MEDWAY I-95 NORTHBOUND ENTRANCE

SCALE: 1/2"=1'-0"

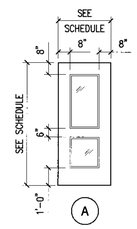

3 DOOR ELEV

SCALE: 1/4"=1'-0"

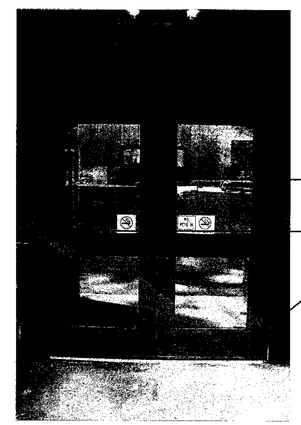

VIEW A

VIEW B

REMOVE AND REPLACE WITH NEW STEEL DOORS

EXISTING FRAME TO REMAIN, NEW PAINT TO MATCH EXISTING, TYP

REMOVE EXISTING RUST, PRIME AND PAINT EXISTING FRAME

2 MEDWAY I-95 SOUTHBOUND ENTRANCE

SCALE: 1/2"=1'-0"

NOTE:
ALL DOORS NOTED ABOVE ARE TO BE REMOVED AND REPLACED.

DOOR SCHEDULE

Door								Frame		Hardware		Miscellaneous				Remarks
No.	Width	Height	Thick.	Materal	Type	Finish	Insul	Material	Thshold	Handle	Exit Device	Glazing	Clsr	MHO	Wstrip	
M-01	3'-0"	7'-0"	1 3/4"	Stl	A	Pre	Yes	ETR	Alum	Door Pull Only	Yes	5/8" Insul	Yes	–	Yes	Verify all dimensions in field
M-02	3'-0"	7'-0"	1 3/4"	Stl	A	Pre	Yes	ETR	Alum	Door Pull Only	Yes	5/8" Insul	Yes	–	Yes	Verify all dimensions in field
M-03	3'-0"	7'-0"	1 3/4"	Stl	A	Pre	Yes	ETR	Alum	Door Pull Only	No	5/8" Insul	Yes	–	Yes	Verify all dimensions in field
M-04	3'-0"	7'-0"	1 3/4"	Stl	A	Pre	Yes	ETR	Alum	Door Pull Only	Yes	5/8" Insul	Yes	–	Yes	Verify all dimensions in field

ABBREVIATIONS

Clsr	Closer
ETR	Existing To Remain
MHO	Magnetic Hold Open
HM	Hollow Metal
Hrdware	Hardware
Insul	Insulated
Ob	Obscure Glass, Tempered
Pnt	Paint
Pre	Prefinished
Stl	Steel
Thick	Thickness
Wstrp	Weatherstriping
Wd	Wood

CASCO BAY ENGINEERING
424 Fore Street
Portland, ME 04101
Phone 207.842.2800
Fax 207.842.2828
www.cascobayengineering.com

STATE OF MAINE DOT

MAINE STATE VISITOR INFORMATION CENTER IMPROVEMENTS 017060.05

	BY	DATE
DESIGN-DETAILED	TD	1-30-13
CHECKED-REVIEWED	ED	1-30-13
REVISION 1		
REVISION 2		
REVISION 3		
FIELD CHANGES		

ME - 12630
PE NUMBER

3-1-13
DATE

MAINE STATE VIC IMPROVEMENTS

MEDWAY VIC
I-95 NORTH & SOUTH

SHEET NUMBER

2

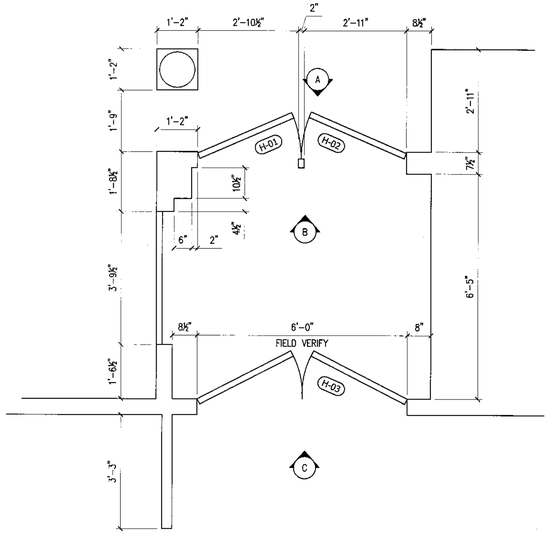

VIEW A

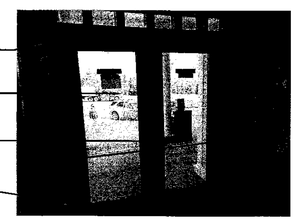

VIEW B

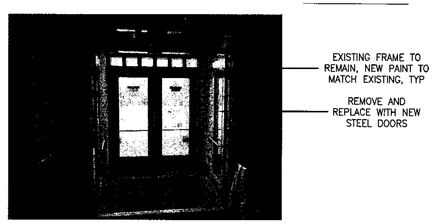

VIEW C

1 HAMPDEN I-95 NORTHBOUND ENTRANCE

SCALE: 1/2"=1'-0"

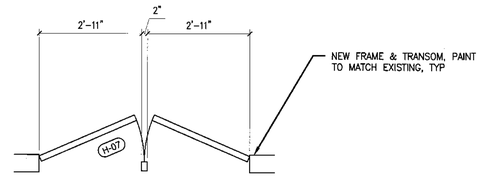

NOTE: ONE SERVICE ENTRANCE AT BOTH NORTHBOUND AND SOUTHBOUND VIC's

4 HAMPDEN SERVICE ENTRANCES

SCALE: 1/2"=1'-0"

DOOR AND FRAME NOTES

1. MATCH EXISTING DOOR HINGE LOCATIONS, TYP. ALL NEW DOORS SHALL HAVE NEW HINGES
2. PROVIDE HOLD OPEN DEVICES AND KICK PLATES ON ALL DOORS, TYP.
3. AT FRAMES TO REMAIN, GRIND RUST AND DEBRIS, PATCH AND FILL ALL HOLES, AND PAINT TO MATCH EXISTING FRAME COLOR.
4. REPLACE ALL EXTERIOR THRESHOLDS WITH NEW THRESHOLDS. MAXIMUM 1/2" REVEAL FROM FLOORING TO MEET ADA.
5. ALL DOOR HARDWARE SHALL MEET ADA.
6. VERIFY ALL DIMENSIONS IN FIELD PRIOR TO ORDERING AND MANUFACTURING.

NOTE:
PROVIDE NEW ADA AUTOMATIC DOOR OPENER (SINGLE LEAF ONLY) ON EXTERIOR AND INTERIOR DOOR. EXTERIOR AND INTERIOR CONTROL BUTTONS SHALL BE PROGRAMMED TO OPEN BOTH EXTERIOR AND INTERIOR DOOR LEAFS AT THE SAME TIME. THE OPENER SHALL BE MOUNTED ON THE RIGHT HAND LEAF AS THE PERSON IS ENTERING. THIS POSTIION MAY BE MOVED TO THE LEFT HAND LEAFT ONLY IF EXISTING CONDITIONS PROHIBIT INSTALLATION ON THE PREFERRED LEAF AND APPROVAL IS GRANTED BY THE DEPARTMENT.

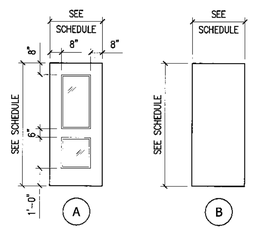

3 DOOR ELEV

SCALE: 1/4"=1'-0"

NOTE:
ALL DOORS NOTED ABOVE ARE TO BE REMOVED AND REPLACED.

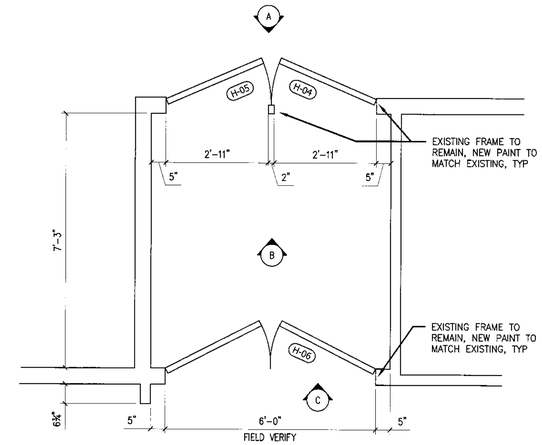

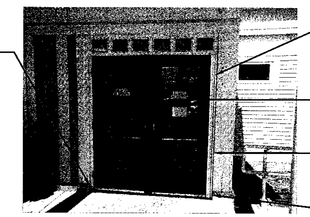

VIEW A

VIEW B

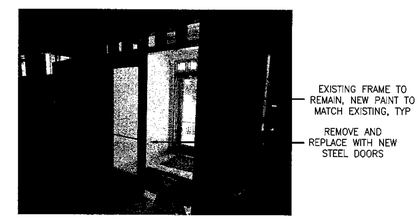

VIEW C

2 HAMPDEN I-95 SOUTHBOUND ENTRANCE

SCALE: 1/2"=1'-0"

DOOR SCHEDULE

Door								Frame		Hardware		Miscellaneous				Remarks
No.	Width	Height	Thick.	Materal	Type	Finish	Insul	Material	Thshold	Handle	Exit Device	Glazing	Clsr	MHO	Wstrip	
H-01	3'-0"	7'-0"	1 3/4"	Stl	A	Pre	Yes	ETR	Alum	Door Pull Only	Yes	5/8" Insul	Yes	–	Yes	Verify all dimensions in field
H-02	3'-0"	7'-0"	1 3/4"	Stl	A	Pre	Yes	ETR	Alum	Door Pull Only	Yes	5/8" Insul	Yes	–	Yes	Verify all dimensions in field
H-03	(2) 3'-0"	7'-0"	1 3/4"	Stl	A	Pre	Yes	ETR	–	Door Push/Pull	No	5/8" Insul	Yes	–	Yes	Verify all dimensions in field
H-04	3'-0"	7'-0"	1 3/4"	Stl	A	Pre	Yes	ETR	Alum	Door Pull Only	Yes	5/8" Insul	Yes	–	Yes	Verify all dimensions in field
H-05	3'-0"	7'-0"	1 3/4"	Stl	A	Pre	Yes	ETR	Alum	Door Pull Only	Yes	5/8" Insul	Yes	–	Yes	Verify all dimensions in field
H-06	(2) 3'-0"	7'-0"	1 3/4"	Stl	A	Pre	Yes	ETR	–	Door Push/Pull	No	5/8" Insul	Yes	–	Yes	Verify all dimensions in field
H-07	(2) 3'-0"	7'-0"	1 3/4"	Stl	B	Pre	Yes	Stl	Alum	Lever Style w/ Dead Bolt Lock	No	–	Yes	–	Yes	Verify all dimensions in field

ABBREVIATIONS

Clsr	Closer
ETR	Existing To Remain
MHO	Magnetic Hold Open
HM	Hollow Metal
Hrdware	Hardware
Insul	Insulated
Ob	Obscure Glass, Tempered
Pnt	Paint
Pre	Prefinished
Stl	Steel
Thick	Thickness
Wstrp	Weatherstriping
Wd	Wood

CASCO BAY ENGINEERING
474 Fore Street
Portland, ME 04101
Phone 207.842.2800
Fax 207.842.2828
www.cascobayengineering.com

STATE OF MAINE DOT
MAINE STATE VISITOR INFORMATION CENTER IMPROVEMENTS
017060.05

	BY	DATE
DESIGN DETAILED	TD	1-30-13
CHECKED-REVIEWED	ED	1-30-13
REVISION 1		
REVISION 2		
REVISION 3		
FIELD CHANGES		

ME - 12830
PE NUMBER
3-1-13
DATE

MAINE STATE VIC IMPROVEMENTS
HAMDEN VIC
I-95 NORTH & SOUTH

SHEET NUMBER
3

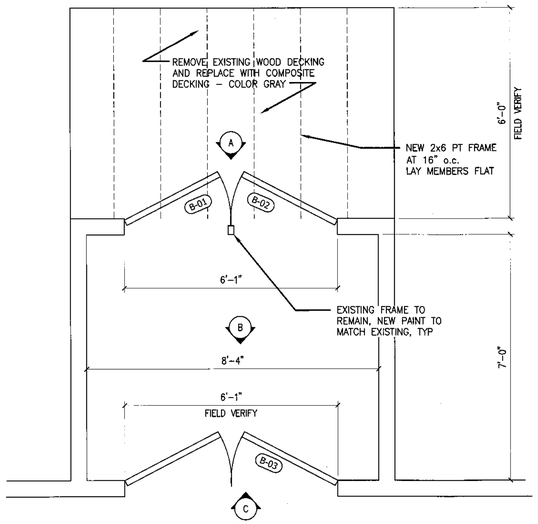

DOOR AND FRAME NOTES

1. MATCH EXISTING DOOR HINGE LOCATIONS, TYP. ALL NEW DOORS SHALL HAVE NEW HINGES
2. PROVIDE HOLD OPEN DEVICES AND KICK PLATES ON ALL DOORS, TYP.
3. AT FRAMES TO REMAIN, GRIND RUST AND DEBRIS, PATCH AND FILL ALL HOLES, AND PAINT TO MATCH EXISTING FRAME COLOR.
4. REPLACE ALL EXTERIOR THRESHOLDS WITH NEW THRESHOLDS. MAXIMUM 1/2" REVEAL FROM FLOORING TO MEET ADA.
5. ALL DOOR HARDWARE SHALL MEET ADA.
6. VERIFY ALL DIMENSIONS IN FIELD PRIOR TO ORDERING AND MANUFACTURING.

NOTE:
PROVIDE NEW ADA AUTOMATIC DOOR OPENER (SINGLE LEAF ONLY) ON EXTERIOR AND INTERIOR DOOR. EXTERIOR AND INTERIOR CONTROL BUTTONS SHALL BE PROGRAMMED TO OPEN BOTH EXTERIOR AND INTERIOR DOOR LEAFS AT THE SAME TIME. THE OPENER SHALL BE MOUNTED ON THE RIGHT HAND LEAF AS THE PERSON IS ENTERING. THIS POSITION MAY BE MOVED TO THE LEFT HAND LEAFT ONLY IF EXISTING CONDITIONS PROHIBIT INSTALLATION ON THE PREFERRED LEAF AND APPROVAL IS GRANTED BY THE DEPARTMENT.

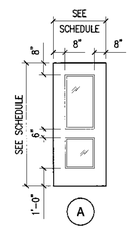

3 DOOR ELEV
SCALE: 1/4"=1'-0"

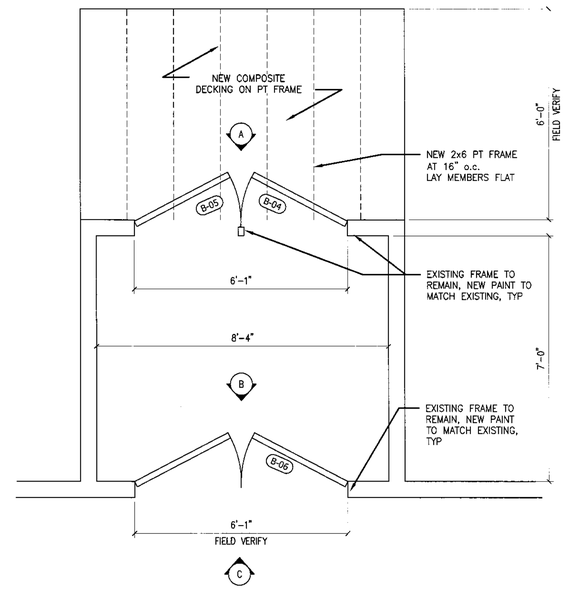

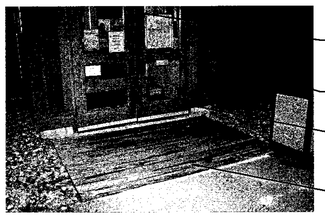

VIEW A

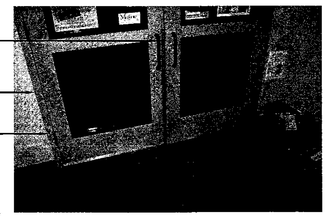

VIEW B

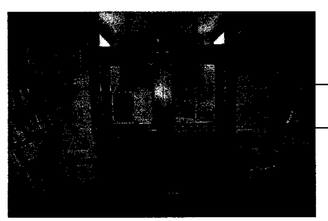

VIEW C

1 BETHEL MAIN ENTRANCE
SCALE: 1/2"=1'-0"

ABBREVIATIONS

Clsr	Closer
ETR	Existing To Remain
MHO	Magnetic Hold Open
HM	Hollow Metal
Hrdware	Hardware
Insul	Insulated
Ob	Obscure Glass, Tempered
Pnt	Paint
Pre	Prefinished
Stl	Steel
Thick	Thickness
Wstrp	Weatherstriping
Wd	Wood

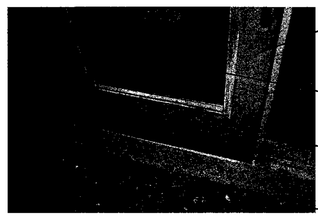

VIEW A

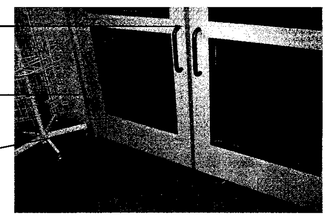

VIEW B

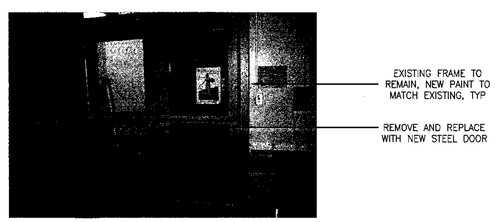

VIEW C

2 BETHEL SIDE ENTRANCE
SCALE: 1/2"=1'-0"

NOTE:
ALL DOORS NOTED ABOVE ARE TO BE REMOVED AND REPLACED.

DOOR SCHEDULE

Door								Frame		Hardware		Miscellaneous				Remarks
No.	Width	Height	Thick.	Materal	Type	Finish	Insul	Material	Thshold	Handle	Exit Device	Glazing	Clsr	MHO	Wstrip	
B-01	3'-0"	7'-0"	1 3/4"	Stl	A	Pre	Yes	ETR	Alum	Door Pull Only	Yes	5/8" Insul	Yes	–	Yes	Verify all dimensions in field
B-02	3'-0"	7'-0"	1 3/4"	Stl	A	Pre	Yes	ETR	Alum	Door Pull Only	Yes	5/8" Insul	Yes	–	Yes	Verify all dimensions in field
B-03	(2) 3'-0"	7'-0"	1 3/4"	Stl	A	Pre	Yes	ETR	–	Door Push/Pull	No	5/8" Insul	Yes	–	Yes	Verify all dimensions in field
B-04	3'-0"	7'-0"	1 3/4"	Stl	A	Pre	Yes	ETR	Alum	Door Pull Only	Yes	5/8" Insul	Yes	–	Yes	Verify all dimensions in field
B-05	3'-0"	7'-0"	1 3/4"	Stl	A	Pre	Yes	ETR	Alum	Door Pull Only	Yes	5/8" Insul	Yes	–	Yes	Verify all dimensions in field
B-06	(2) 3'-0"	7'-0"	1 3/4"	Stl	A	Pre	Yes	ETR	–	Door Push/Pull	No	5/8" Insul	Yes	–	Yes	Verify all dimensions in field

CASCO BAY ENGINEERING
474 Fore Street
Portland, ME 04101
Phone 207.842.2800
Fax 207.842.2828
www.cascobayengineering.com

STATE OF MAINE DOT
MAINE STATE VISITOR INFORMATION CENTER IMPROVEMENTS
017060.05

	BY	DATE
DESIGN-DETAILED	TD	1-30-13
CHECKED-REVIEWED	ED	1-30-13
PE NUMBER		ME - 12630
REVISION 1		
REVISION 2		
REVISION 3		3-1-13
FIELD CHANGES		DATE

MAINE STATE VIC IMPROVEMENTS
BETHEL VIC
MAIN & SIDE ENTRANCES

SHEET NUMBER
4

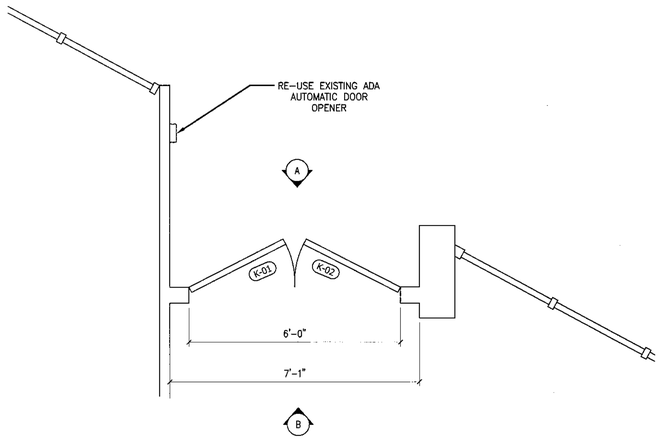

DOOR AND FRAME NOTES

1. MATCH EXISTING DOOR HINGE LOCATIONS, TYP. ALL NEW DOORS SHALL HAVE NEW HINGES
2. PROVIDE HOLD OPEN DEVICES AND KICK PLATES ON ALL DOORS, TYP.
3. AT FRAMES TO REMAIN, GRIND RUST AND DEBRIS, PATCH AND FILL ALL HOLES, AND PAINT TO MATCH EXISTING FRAME COLOR.
4. REPLACE ALL EXTERIOR THRESHOLDS WITH NEW THRESHOLDS. MAXIMUM 1/2" REVEAL FROM FLOORING TO MEET ADA.
5. ALL DOOR HARDWARE SHALL MEET ADA.
6. VERIFY ALL DIMENSIONS IN FIELD PRIOR TO ORDERING AND MANUFACTURING.

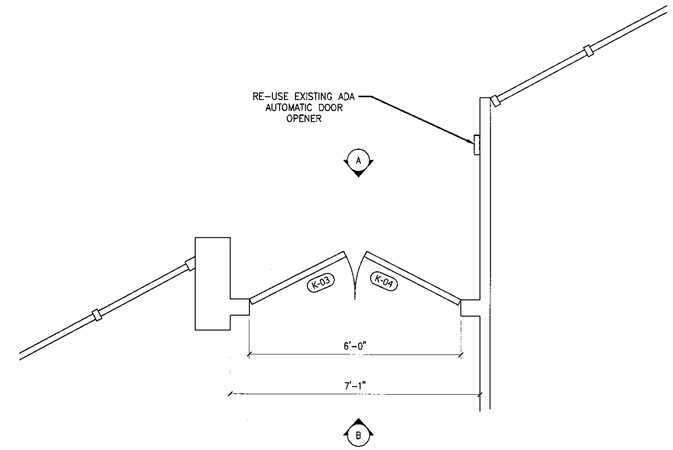

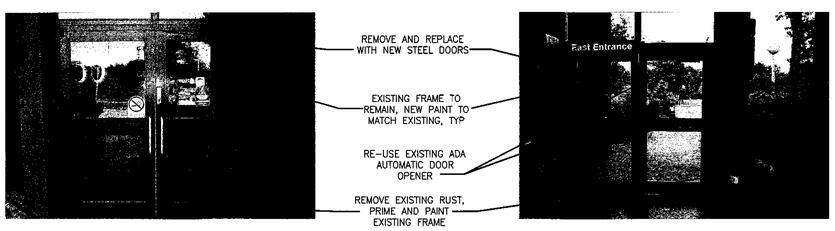

VIEW A VIEW B

1 KITTERY EAST ENTRANCE

SCALE: 1/2"=1'-0"

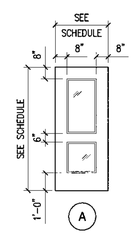

3 DOOR ELEV

SCALE: 1/4"=1'-0"

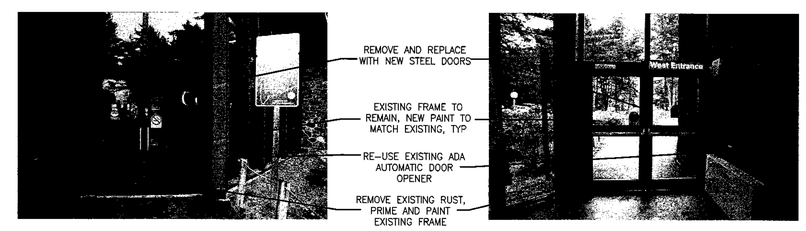

VIEW A VIEW B

2 KITTERY WEST ENTRANCE

SCALE: 1/2"=1'-0"

NOTE:
ALL DOORS NOTED ABOVE ARE TO BE REMOVED AND REPLACED.

DOOR SCHEDULE

Door								Frame		Hardware		Miscellaneous				Remarks
No.	Width	Height	Thick.	Materal	Type	Finish	Insul	Material	Thshold	Handle	Exit Device	Glazing	Clsr	MHO	Wstrip	
K-01	3'-0"	7'-0"	1 3/4"	Stl	A	Pre	Yes	ETR	Alum	Door Pull Only	Yes	5/8" Insul	Yes	–	Yes	Verify all dimensions in field
K-02	3'-0"	7'-0"	1 3/4"	Stl	A	Pre	Yes	ETR	Alum	Door Pull Only	Yes	5/8" Insul	Yes	–	Yes	Verify all dimensions in field
K-03	3'-0"	7'-0"	1 3/4"	Stl	A	Pre	Yes	ETR	Alum	Door Pull Only	No	5/8" Insul	Yes	–	Yes	Verify all dimensions in field
K-04	3'-0"	7'-0"	1 3/4"	Stl	A	Pre	Yes	ETR	Alum	Door Pull Only	Yes	5/8" Insul	Yes	–	Yes	Verify all dimensions in field

ABBREVIATIONS

Clsr	Closer
ETR	Existing To Remain
MHO	Magnetic Hold Open
HM	Hollow Metal
Hrdware	Hardware
Insul	Insulated
Ob	Obscure Glass, Tempered
Pnt	Paint
Pre	Prefinished
Stl	Steel
Thick	Thickness
Wstrp	Weatherstriping
Wd	Wood

CASCO BAY ENGINEERING
424 Fore Street
Portland, ME 04101
Phone 207.842.2800
Fax 207.842.2828
www.cascobayengineering.com

STATE OF MAINE DOT

MAINE STATE VISITOR INFORMATION CENTER IMPROVEMENTS
017060.05

	BY	DATE
DESIGN-DETAILED	TD	1-30-13
CHECKED-REVIEWED	ED	1-30-13
PE NUMBER	ME - 12630	
REVISION 1		
REVISION 2		
REVISION 3	3-1-13	
FIELD CHANGES	DATE	

MAINE STATE VIC IMPROVEMENTS

KITTERY VIC
EAST & WEST ENTRANCES

SHEET NUMBER

5

EXISTING EXTERIOR DOORS AND FRAMES TO REMAIN

EXISTING INTERIOR DOORS AND FRAMES TO REMAIN

PROVIDE NEW WEATHER STRIPPING TO EXISTING EXTERIOR AND INTERIOR DOORS

NOTE:
PROVIDE NEW ADA AUTOMATIC DOOR OPENER (SINGLE LEAF ONLY) ON EXTERIOR AND INTERIOR DOOR. EXTERIOR AND INTERIOR CONTROL BUTTONS SHALL BE PROGRAMMED TO OPEN BOTH EXTERIOR AND INTERIOR DOOR LEAFS AT THE SAME TIME. THE OPENER SHALL BE MOUNTED ON THE RIGHT HAND LEAF AS THE PERSON IS ENTERING. THIS POSITION MAY BE MOVED TO THE LEFT HAND LEAFT ONLY IF EXISTING CONDITIONS PROHIBIT INSTALLATION ON THE PREFERRED LEAF AND APPROVAL IS GRANTED BY THE DEPARTMENT.

1 MAIN ENTRANCE

SCALE: NTS

CASCO BAY ENGINEERING
424 Fore Street
Portland, ME 04101
Phone 207.842.2800
Fax 207.842.2826
www.cascobayengineering.com

STATE OF MAINE DOT

MAINE STATE VISITOR INFORMATION CENTER IMPROVEMENTS
017060.05

	BY	DATE
DESIGN-DETAILED	TD	1-30-13
CHECKED-REVIEWED	ED	1-30-13
REVISION 1		
REVISION 2		
REVISION 3		3-1-13
FIELD CHANGES		DATE

ME - 12630
PE NUMBER

MAINE STATE VIC IMPROVEMENTS

YARMOUTH
MAIN ENTRANCE

SHEET NUMBER

6