B.P.R. REG. NO.	STATE	PROJECT NUMBER	SHEET NO.	TOTAL SHEETS
1	MAINE	I-95-1(22)16	1	14

NEW HAMPSHIRE DEPARTMENT OF PUBLIC WORKS AND HIGHWAYS
MAINE STATE HIGHWAY COMMISSION

PISCATAQUA RIVER BRIDGE
INTERSTATE ROUTE 95
PROJECT NO. I-95-1 (22) 16

PORTSMOUTH, NEW HAMPSHIRE
COUNTY OF ROCKINGHAM

TO

KITTERY, MAINE
COUNTY OF YORK

LENGTH OF PROJECT 0.853 MILES
CONTRACT NO. 2 - MAINE APPROACH STRUCTURAL STEEL

SHEET	TITLE
1	COVER SHEET
2	GENERAL NOTES & QUANTITY SUMMARY
3	PROJECT PLAN AND ELEVATION
4	GENERAL PLAN AND ELEVATION
5	TYPICAL SECTION
6 - 8	FRAMING PLANS
9 - 10	STRINGERS
11	STRINGER DATA
12	SHOES AND LATERALS
13 - 14	STEEL DETAILS

SPECIFICATIONS

1. MAINE STATE HIGHWAY COMMISSION. REVISION OF JUNE, 1965
2. SPECIAL PROVISIONS.
3. SUPPLEMENTAL SPECIFICATIONS.

TRAFFIC

AADT 1990 ———— 38,580
DHV ———— 6,560
T ———— 1 %
D ———— 70 %
V ———— 70 MPH

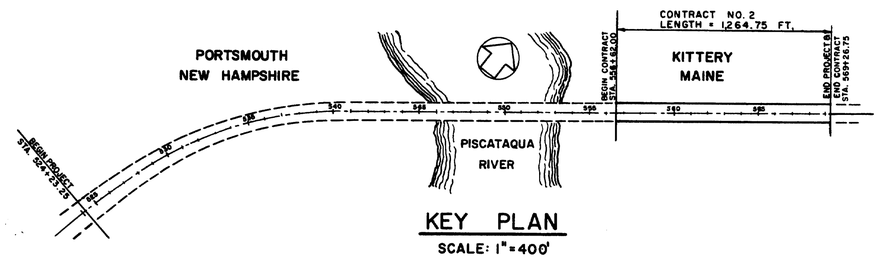

KEY PLAN
SCALE: 1" = 400'

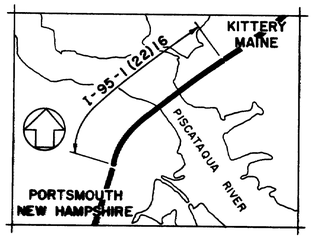

LOCATION MAP
SCALE: 1" = 2000'

APPROVED
NEW HAMPSHIRE DEPARTMENT OF PUBLIC WORKS AND HIGHWAYS

John O. Morton — COMMISSIONER

[illegible] — DEPUTY COMMISSIONER AND CHIEF ENGINEER

SEPTEMBER 18, 1968 — DATE

APPROVED
MAINE STATE HIGHWAY COMMISSION

Dail A. Strum — CHAIRMAN

Bertrand G. Lockhart

[illegible]

Sylvester L. Poor — CHIEF ENGINEER

OCTOBER 2, 1968 — DATE

STATE OF MAINE — SYLVESTER L. POOR 187 — REGISTERED PROFESSIONAL ENGINEER

PREPARED BY

HARDESTY & HANOVER
CONSULTING ENGINEERS
NEW YORK, NEW YORK

John J. Fiala

SEPTEMBER 10, 1968 — DATE

AS BUILT
25 April 73

DEPARTMENT OF TRANSPORTATION
FEDERAL HIGHWAY ADMINISTRATION
BUREAU OF PUBLIC ROADS
REGION 1

APPROVED

DIVISION ENGINEER — DATE

129-15

B. P. R. REG. NO.	STATE	PROJECT NUMBER	SHEET NO.	TOTAL SHEETS
1	MAINE	I-95-1(22)16	2	14

SPECIFICATIONS

THE FOLLOWING SPECIFICATIONS GOVERN THE DESIGN AND CONSTRUCTION OF THIS PROJECT:

DESIGN
- AMERICAN ASSOCIATION OF STATE HIGHWAY OFFICIALS, NINTH EDITION, 1965
  - STANDARD SPECIFICATIONS FOR HIGHWAY BRIDGES
- AMERICAN WELDING SOCIETY
  - SPECIFICATIONS FOR WELDED HIGHWAY AND RAILWAY BRIDGES AWS D2.0-66 AND SUPPLEMENTS

CONSTRUCTION
- STATE OF MAINE, STATE HIGHWAY COMMISSION
  - STANDARD SPECIFICATIONS - HIGHWAY AND BRIDGES REVISION OF JUNE 1965
  - SUPPLEMENTAL SPECIFICATIONS
  - SPECIAL PROVISIONS FOR THE PROJECT

DESIGN CRITERIA

DESIGN SPEED = 70 MPH
MINIMUM STOPPING SIGHT DISTANCE = 600 FEET
VERTICAL NAVIGATION CLEARANCE ABOVE MEAN HIGH WATER 135'-0"
LIVE LOAD
- CASE I — AASHO HS-20-44 WITH ALLOWABLE UNIT STRESSES DETERMINED BY THE CRITERIA FOR FATIGUE
- CASE II — AASHO HS-20-44 INCREASED BY 100% WITH ALLOWABLE UNIT STRESSES OF 150% OF BASIC STRESSES
- CASE III — MILITARY TANDEM AXLE LOAD OF TWO 24,000 POUND AXLES SPACED 4'-0" APART WITH ALLOWABLE UNIT STRESSES EQUAL TO BASIC STRESSES

WIND LOAD
- GIRDER SPANS 50 POUNDS PER SQUARE FOOT ON THE PROJECTED AREA OF THE SUPERSTRUCTURE

DIMENSIONS

ALL DIMENSIONS SHOWN IN PLAN VIEWS ARE HORIZONTAL AND AT A TEMPERATURE OF 45°F.

DESIGN STRESSES

BASIC STRESSES ARE AS FOLLOWS:

STRUCTURAL STEEL A36	
TENSION	20,000 PSI
COMPRESSION (BEAMS)	$20,000 - 7.5\ (L/B)^2$ PSI
SHEAR (WEBS)	12,000 PSI
BOLTS (7/8" BOLTS IN SINGLE SHEAR) (FRICTION TYPE)	8,000 LBS. PER BOLT

STRUCTURAL STEEL

1. METAL IN THE SUPERSTRUCTURE SHALL CONFORM TO THE FOLLOWING ASTM SPECIFICATIONS:

STRINGERS	A36
DIAPHRAGMS	A36
SHOES	AS DETAILED ON PLANS
EXPANSION LINK BUSHINGS	B22 ALLOY E (MODIFIED)
EXPANSION JOINTS	A242 (CORROSION RESISTANT) (WELDABLE)
BOLTS	A325

2. TYPE OF FABRICATION

STRUCTURAL STEEL SHALL, IN GENERAL, BE SHOP WELDED AND SHOP AND FIELD BOLTED USING HIGH STRENGTH BOLTS.

3. BOLTS

BOLTS SHALL BE 7/8" DIAMETER A325 BOLTS. MINIMUM BOLT SPACING SHALL BE 3" CENTER TO CENTER

4. CAMBER

STRINGERS SHALL BE CAMBERED FOR FULL DEAD LOAD PLUS VERTICAL CURVE.

5. PAINTING

THE STRUCTURAL STEEL SHALL BE GIVEN ONE SHOP COAT OF PAINT AND ONE TOUCH-UP COAT OF PAINT IN THE FIELD.

STRUCTURAL STEEL ADJACENT TO EXPANSION JOINTS AND BELOW DECK LEVEL SHALL BE PAINTED WITH ONE COAT OF ZINC RICH EPOXY COATING.

QUANTITY SUMMARY

ITEM NO.	DESCRIPTION	UNIT
504.701	STRUCTURAL STEEL, FABRICATED AND DELIVERED	L.S.
504.711	STRUCTURAL STEEL, ERECTION	L.S.

STRUCTURAL STEEL BREAKDOWN (POUNDS)

ITEM 504.701 STRUCTURAL STEEL, FABRICATED AND DELIVERED			
	A36	A242 CORROSION RESISTANT	SPECIAL
STRINGERS	3,907,000		
BRACING & DIAPHRAGMS	398,000		
SHOES	49,000		63,000
EXPANSION JOINTS	24,000	105,000	14,000
SUB-TOTAL	4,378,000	105,000	77,000
TOTAL	4,560,000		

ITEM 504.711 STRUCTURAL STEEL, ERECTION	
STRINGERS	3,683,000
BRACING & DIAPHRAGMS	377,000
SHOES	112,000
EXPANSION JOINTS	134,000
TOTAL	4,306,000

2

DESIGN — TRACE — M. Reply
CHECK — J.S. Hashimura
BRIDGE NO. IN CHARGE OF — R.W. Chinatti

NEW HAMPSHIRE
DEPARTMENT OF PUBLIC WORKS AND HIGHWAYS
AND
MAINE STATE HIGHWAY COMMISSION
INTERSTATE 95 BRIDGE
OVER
PISCATAQUA RIVER
BETWEEN
PORTSMOUTH, NEW HAMPSHIRE AND KITTERY, MAINE

GENERAL NOTES
QUANTITY SUMMARY

SHEET 2 OF 14

HARDESTY & HANOVER
CONSULTING ENGINEERS
NEW YORK, N. Y.

129-16

B.P.R. REG. NO.	STATE	PROJECT NUMBER	SHEET NO.	TOTAL SHEETS
1	MAINE	I-95-1(22)16	3	14

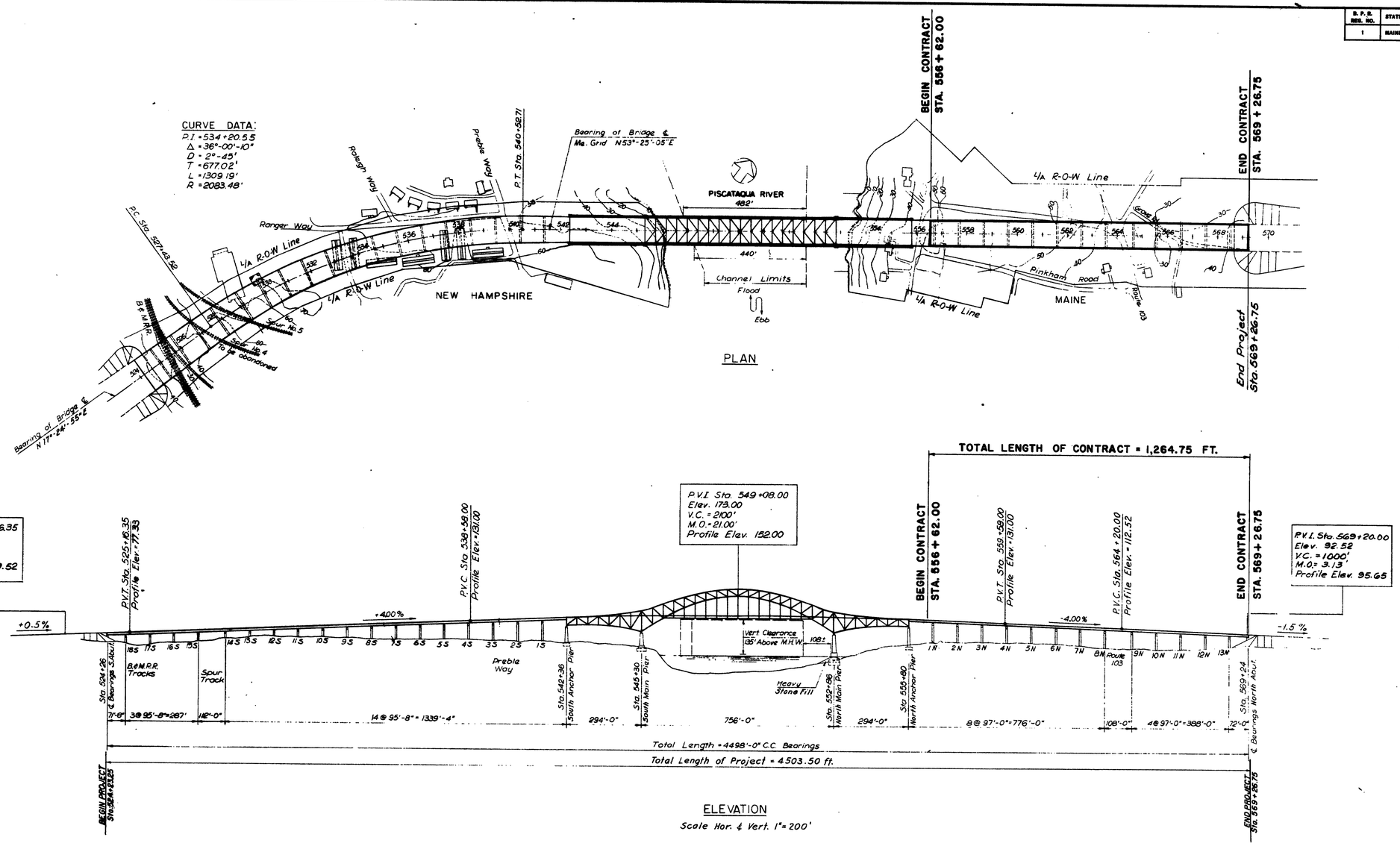

2

DESIGN – TRACE – S. Bradford
CHECK – R.W. Christie

BRIDGE NO. IN CHARGE OF – R.W. Christie

NEW HAMPSHIRE
DEPARTMENT OF PUBLIC WORKS AND HIGHWAYS
AND
MAINE STATE HIGHWAY COMMISSION
INTERSTATE 95 BRIDGE
OVER
PISCATAQUA RIVER
BETWEEN
PORTSMOUTH, NEW HAMPSHIRE AND KITTERY, MAINE

HARDESTY & HANOVER
CONSULTING ENGINEERS
NEW YORK, N. Y.

PROJECT
PLAN AND ELEVATION

SHEET 3 OF 14

129-17

S. P. R. REG. NO.	STATE	PROJECT NUMBER	SHEET NO.	TOTAL SHEETS
1	MAINE	I-95-1(22)16	4	14

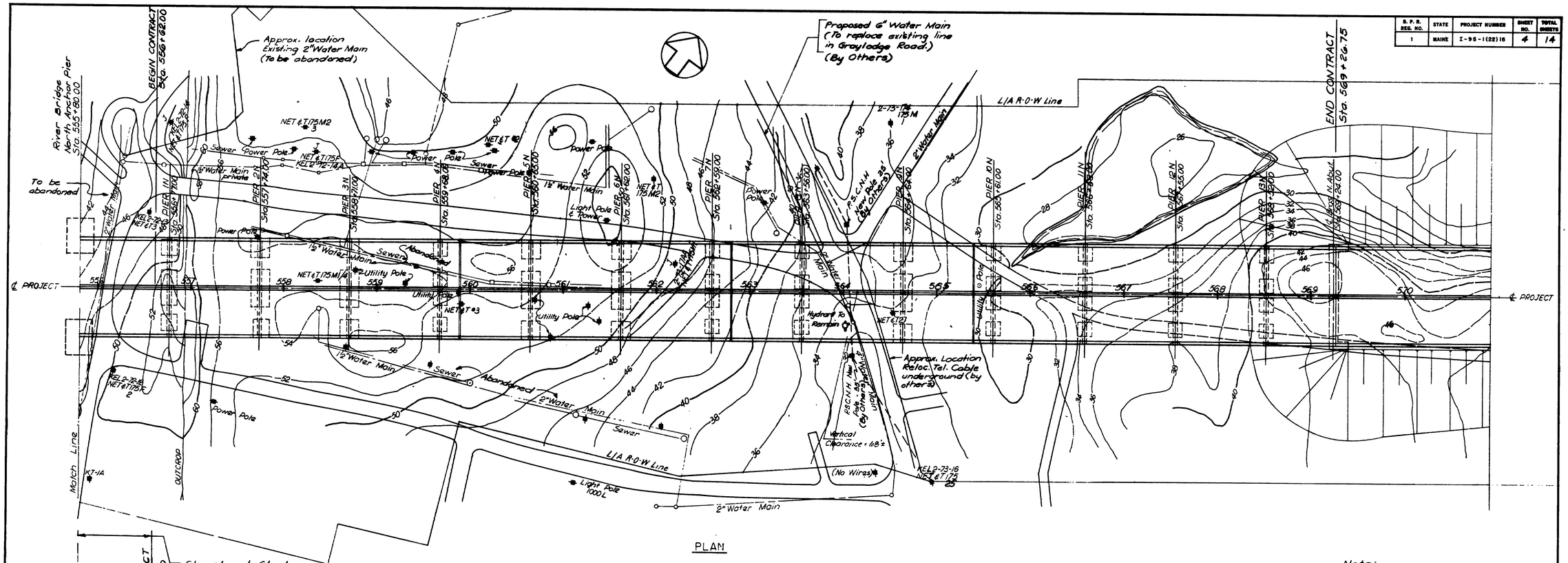

PLAN

Structural Steel to be furnished but not erected under this Contract.

Note: All construction, relocation, and abandoning of utilities shall be performed by Others.

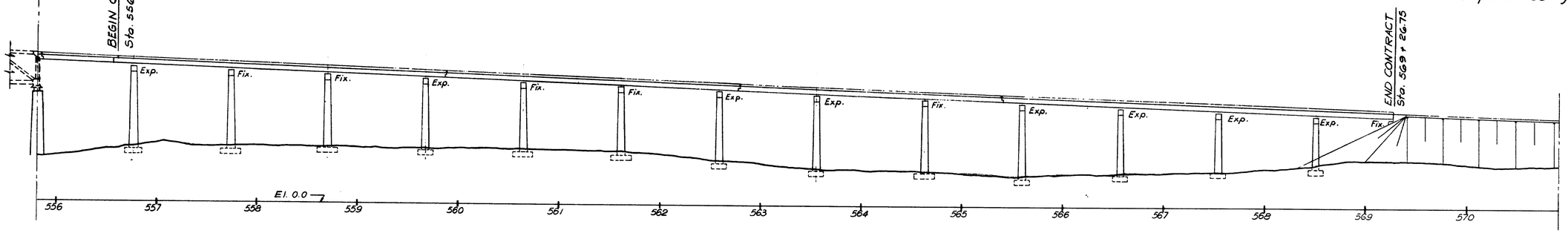

ELEVATION

Scale Horiz. & Vert.: 1" = 50'

2

DESIGN – TRACE – J. Bradford
CHECK – H.R. Cottley + R.W. Christie

BRIDGE NO. IN CHARGE OF – R.W. Christie

NEW HAMPSHIRE
DEPARTMENT OF PUBLIC WORKS AND HIGHWAYS
AND
MAINE STATE HIGHWAY COMMISSION
INTERSTATE 95 BRIDGE
OVER
PISCATAQUA RIVER
BETWEEN
PORTSMOUTH, NEW HAMPSHIRE AND KITTERY, MAINE

GENERAL PLAN & ELEVATION
STA. 555+80 - STA. 569+24

HARDESTY & HANOVER
CONSULTING ENGINEERS
NEW YORK, N. Y.

SHEET 4 OF 14

129-18

B. P. R. REG. NO.	STATE	PROJECT NUMBER	SHEET NO.	TOTAL SHEETS
1	MAINE	I-95-1(22)16	5	14

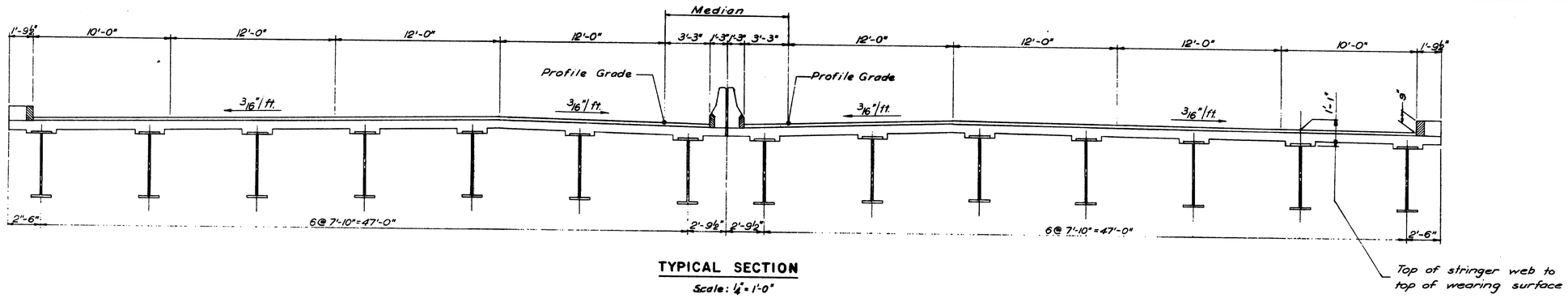

TYPICAL SECTION

Scale: ¼" = 1'-0"

(DECK, MEDIAN BARRIER, AND BRUSH CURBS ARE NOT PART OF THIS CONTRACT)

2

DESIGN — TRACE — C. Janszewski
CHECK — S.S. Nishimura

BRIDGE NO. IN CHARGE OF — R.W. Christie

NEW HAMPSHIRE
DEPARTMENT OF PUBLIC WORKS AND HIGHWAYS
AND
MAINE STATE HIGHWAY COMMISSION
INTERSTATE 95 BRIDGE
OVER
PISCATAQUA RIVER
BETWEEN
PORTSMOUTH, NEW HAMPSHIRE AND KITTERY, MAINE

HARDESTY & HANOVER
CONSULTING ENGINEERS
NEW YORK, N. Y.

TYPICAL SECTION

SHEET 5 OF 14

129-19

B.P.R. REG. NO.	STATE	PROJECT NUMBER	SHEET NO.	TOTAL SHEETS
1	MAINE	I-95-1(22)16	6	14

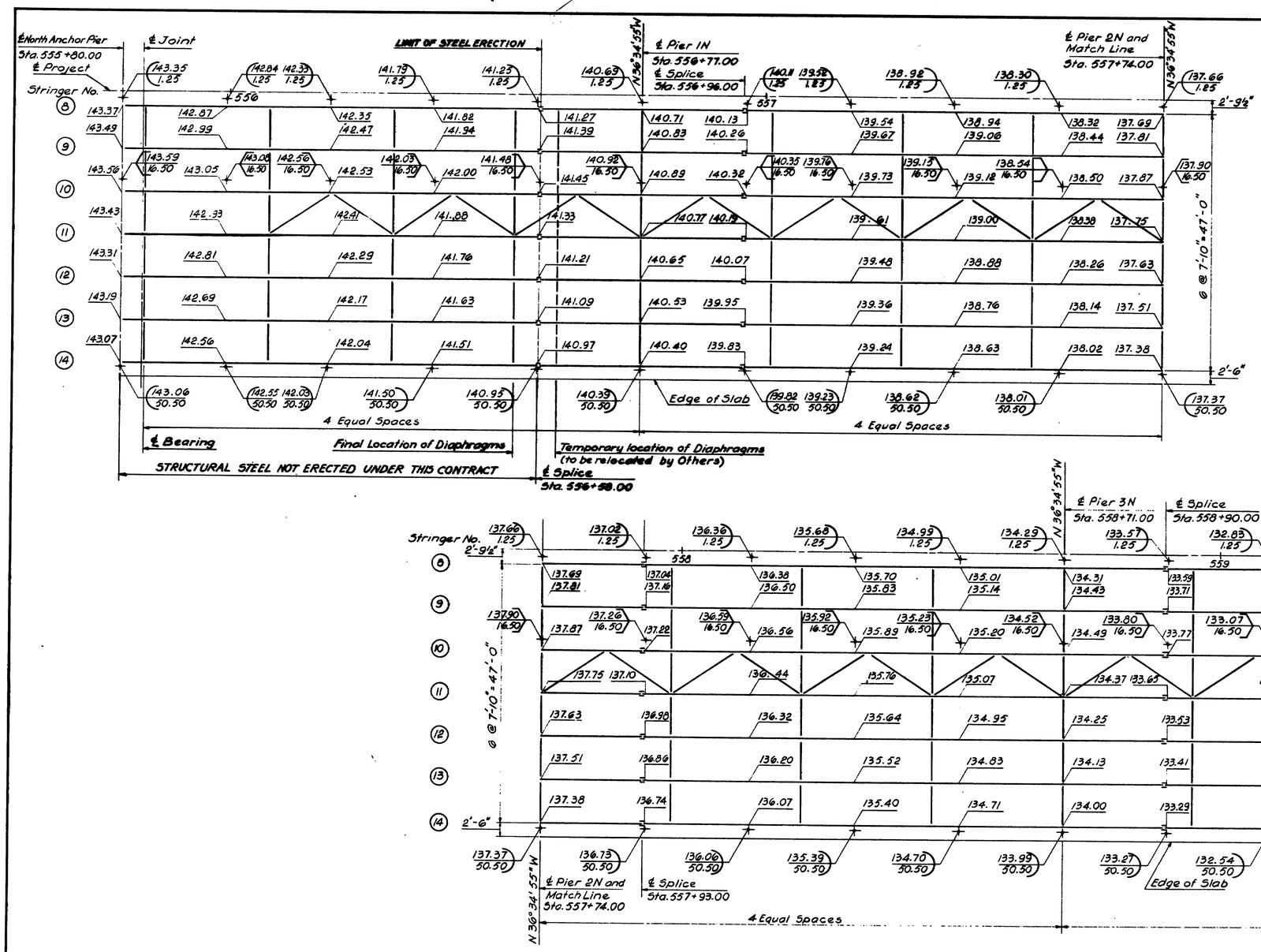

NOTE:
Elevations given are for top of wearing surface. Vertical distance from top of wearing surface to the top of stringer web is 1'-1". Elevations are given for 5th points of stringer spans except in span adjacent to abutment, where elevations are given for 4th points.

STRINGER NUMBER	WEB PLATE	FLANGES							
		Sta. 555+80.00 to Sta. 556+58.00	Sta. 556+58.00 to Sta. 556+96.00	Sta. 556+96.00 to Sta. 557+55.00	Sta. 557+55.00 to Sta. 557+93.00	Sta. 557+93.00 to Sta. 558+52.00	Sta. 558+52.00 to Sta. 558+90.00	Sta. 558+90.00 to Sta. 559+49.00	Sta. 559+49.00 to Sta. 559+88.79
1-14	54×7/16	16 × 1⅛	16 × 1⅝	16 × ¾	16 × 1⅜	16 × ¾	16 × 1½	16 × ¾	16 × 1¼
	54×½	Stringer Type "G"		Stringer Type "B-1"		Stringer Type "B-1"		Stringer Type "F-1"	
		Exp. Joint	Splice	Splice		Splice		Splice	Exp. Joint

LEGEND:

131.79 ← Gutter Elevation
50.50 ← Gutter Offset

133.07 ← High Point Elevation
16.50 ← High Point Offset

HARDESTY & HANOVER
CONSULTING ENGINEERS
NEW YORK, N. Y.

2

DESIGN – A.W. Gardy
TRACE – A.D. Tchenkell
CHECK – B. Rak A.W. Gardy

BRIDGE NO. IN CHARGE OF – R.W. Christie

NEW HAMPSHIRE
DEPARTMENT OF PUBLIC WORKS AND HIGHWAYS
AND
MAINE STATE HIGHWAY COMMISSION
INTERSTATE 95 BRIDGE
OVER
PISCATAQUA RIVER
BETWEEN
PORTSMOUTH, NEW HAMPSHIRE AND KITTERY, MAINE
MAINE APPROACH
FRAMING PLAN
STA. 555 + 80 TO STA. 559 + 87
SHEET 6 OF 14

129-20

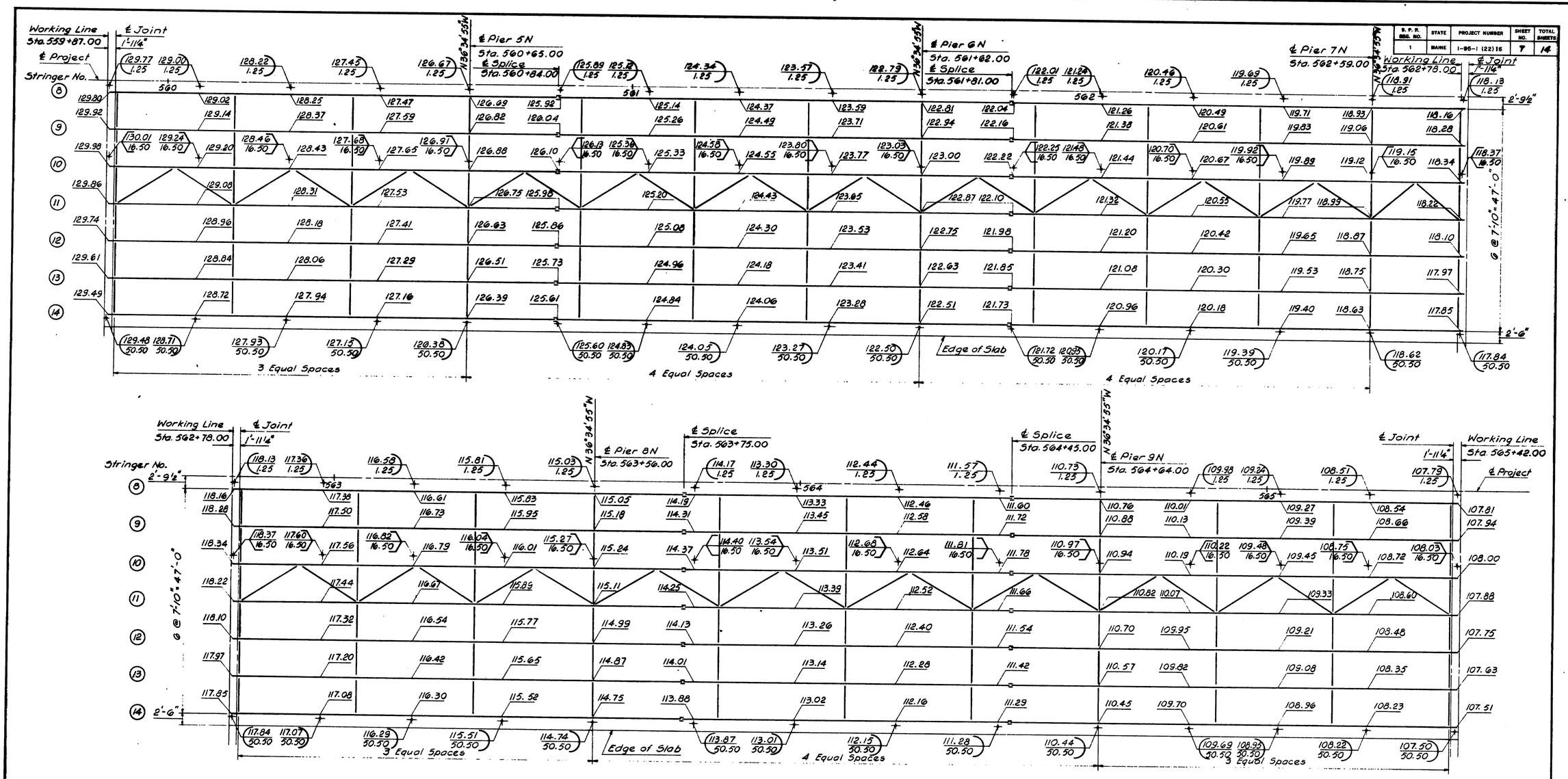

S.P.R. REG. NO.	STATE	PROJECT NUMBER	SHEET NO.	TOTAL SHEETS
1	MAINE	I-95-1 (22)16	7	14

STRINGER NUMBER	WEB PLATE	FLANGES										
		Sta. 559+87.00 to Sta. 560+46.00	Sta. 560+46.00 to Sta. 560+84.00	Sta. 560+84.00 to Sta. 561+43.00	Sta. 561+43.00 to Sta. 561+81.00	Sta. 561+81.00 to Sta. 562+40.00	Sta. 562+40.00 to Sta. 562+78.00	Sta. 562+78.00 to Sta. 563+37.00	Sta. 563+37.00 to Sta. 563+75.00	Sta. 563+75.00 to Sta. 564+45.00	Sta. 564+45.00 to Sta. 564+83.00	Sta. 564+83.00 to Sta. 565+42.00
1-14	54×7/16	16×3/4	16×1/4	16×3/4	16×1/2	16×3/4	16×1/4	16×3/4	16×1/2	16×7/8	16×1/2	16×3/4
	54×1/2	Stringer Type "D"		Stringer Type "B-1"		Stringer Type "F-1"		Stringer Type "D"		Str. Type "E-2"	Stringer Type "D"	
		Exp. Joint		Splice		Splice		Exp. Joint		Splice	Splice	Exp. Joint

2

DESIGN – A. W. Garcia
TRACE – A. D. Tchenkeli
CHECK – B. Rak A. W. Garcia

BRIDGE NO. IN CHARGE OF – R. W. Christie

NEW HAMPSHIRE
DEPARTMENT OF PUBLIC WORKS AND HIGHWAYS
AND
MAINE STATE HIGHWAY COMMISSION
INTERSTATE 95 BRIDGE
OVER
PISCATAQUA RIVER
BETWEEN
PORTSMOUTH, NEW HAMPSHIRE AND KITTERY, MAINE
MAINE APPROACH
FRAMING PLAN
STA. 559 + 87 TO STA. 565 + 42
SHEET 7 OF 14

HARDESTY & HANOVER
CONSULTING ENGINEERS
NEW YORK, N. Y.

129-21

S. P. R. BRIDGE NO.	STATE	PROJECT NUMBER	SHEET NO.	TOTAL SHEETS
1	MAINE	I-95-1(22)16	8	14

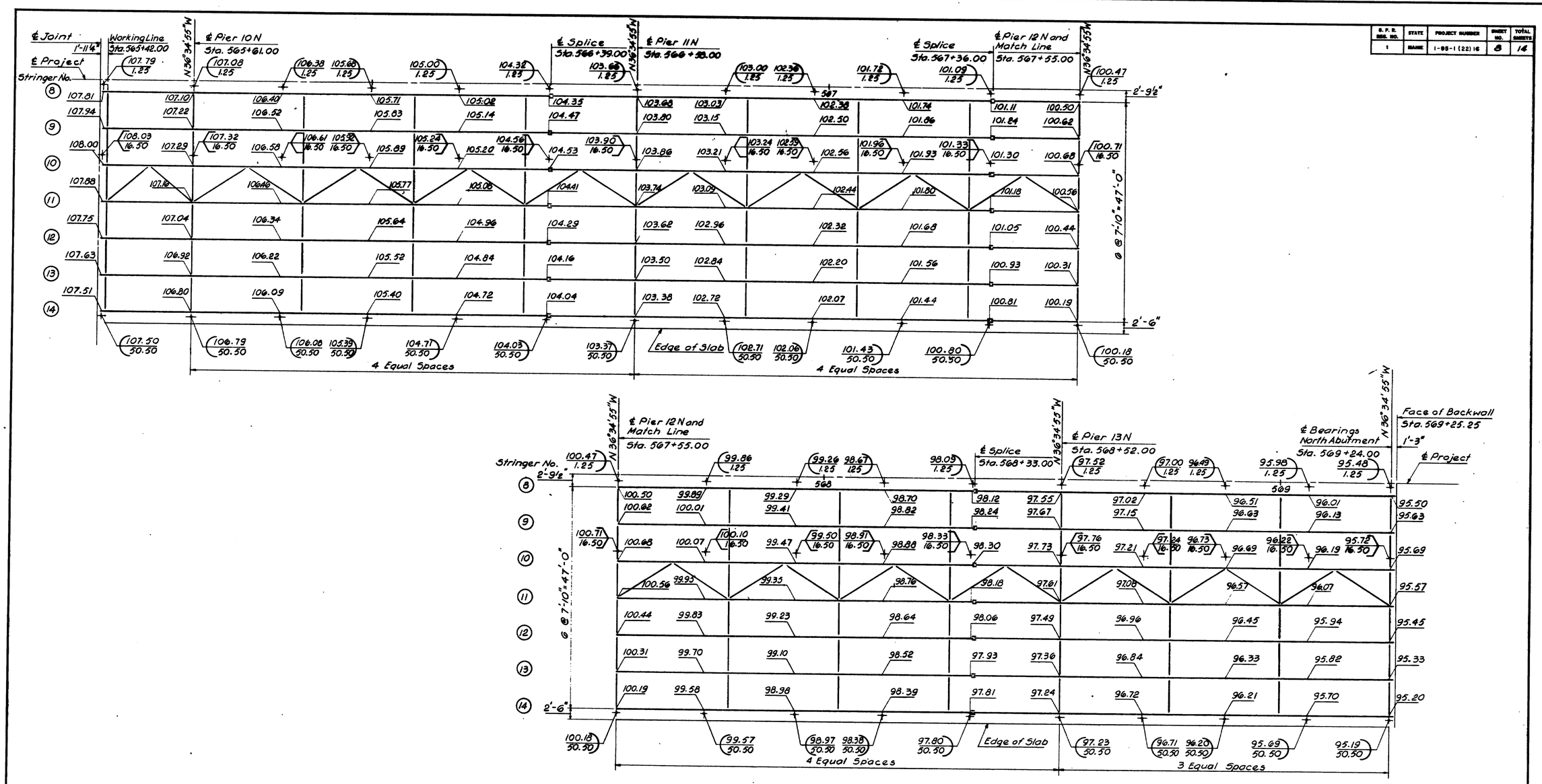

STRINGER NUMBER	WEB PLATE	FLANGES							
		Sta. 565+42.00 to Sta. 565+80.00	Sta. 565+80.00 to Sta. 566+39.00	Sta. 566+39.00 to Sta. 566+77.00	Sta. 566+77.00 to Sta. 567+36.00	Sta. 567+36.00 to Sta. 567+74.00	Sta. 567+74.00 to Sta. 568+33.00	Sta. 568+33.00 to Sta. 568+71.00	Sta. 568+71.00 to Sta. 569+24.00
1-14	54 × 7/16 54 × 1/2	16 × 1/4	16 × 3/4	16 × 1 3/8	16 × 3/4	16 × 1 3/8	16 × 3/4	16 × 1/8	16 × 3/4
		Stringer Type "F-1"		Stringer Type "B-1"		Stringer Type "B-1"		Stringer Type "A"	
		Exp. Joint		Splice		Splice		Splice	Shoe

HARDESTY & HANOVER
CONSULTING ENGINEERS
NEW YORK, N. Y.

2

DESIGN – [illegible]
TRACE – A. D. Tchenkeli
CHECK – B. Rok [illegible]
BRIDGE NO. IN CHARGE OF – R. W. Christie

NEW HAMPSHIRE
DEPARTMENT OF PUBLIC WORKS AND HIGHWAYS
AND
MAINE STATE HIGHWAY COMMISSION
INTERSTATE 95 BRIDGE
OVER
PISCATAQUA RIVER
BETWEEN
PORTSMOUTH, NEW HAMPSHIRE AND KITTERY, MAINE
MAINE APPROACH
FRAMING PLAN
STA. 565 + 42 TO STA. 569 + 24
SHEET 8 OF 14

129-22

B. P. R. REG. NO.	STATE	PROJECT NUMBER	SHEET NO.	TOTAL SHEETS
1	MAINE	I-95-1(22)16	9	14

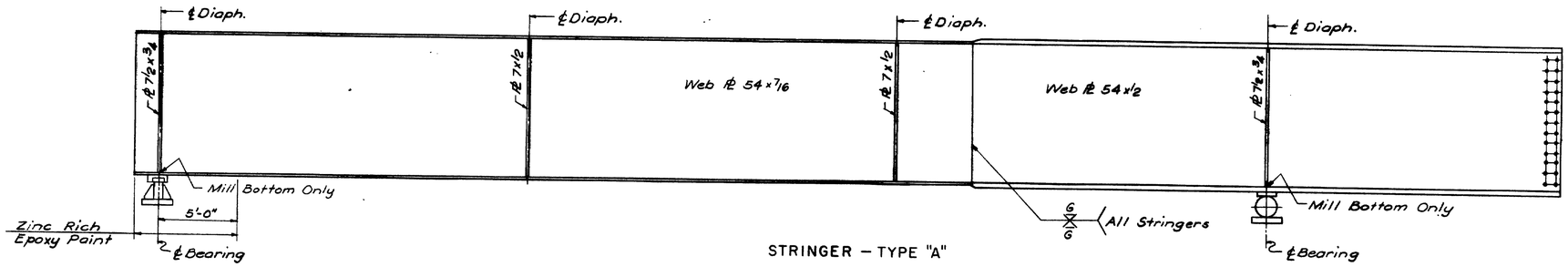

STRINGER – TYPE "A"

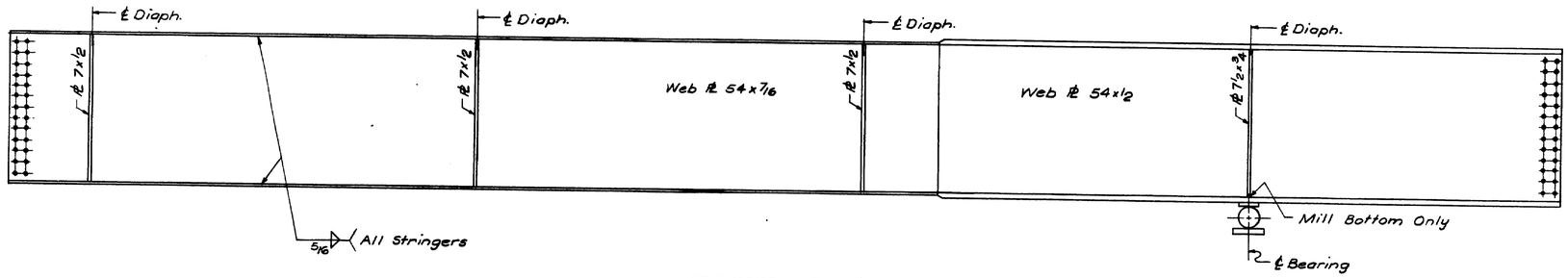

STRINGER – TYPE "B1"

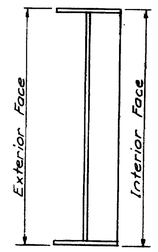

SECTION AT DIAPHRAGM
FASCIA STRINGER
Scale: ¾"=1'-0"

NOTE:
See Framing Plans for Flange Thickness.

2

DESIGN – [signature]
TRACE – [signature]
CHECK – S.S. Nishimura

BRIDGE NO.
IN CHARGE OF – R.W. Christie

NEW HAMPSHIRE
DEPARTMENT OF PUBLIC WORKS AND HIGHWAYS
AND
MAINE STATE HIGHWAY COMMISSION
INTERSTATE 95 BRIDGE
OVER
PISCATAQUA RIVER
BETWEEN
PORTSMOUTH, NEW HAMPSHIRE AND KITTERY, MAINE
APPROACH SPANS
STRINGER TYPES I

HARDESTY & HANOVER
CONSULTING ENGINEERS
NEW YORK, N. Y.

SHEET 9 OF 14

129-23

B. P. R. REG. NO.	STATE	PROJECT NUMBER	SHEET NO.	TOTAL SHEETS
1	MAINE	I-95-1(22)16	10	14

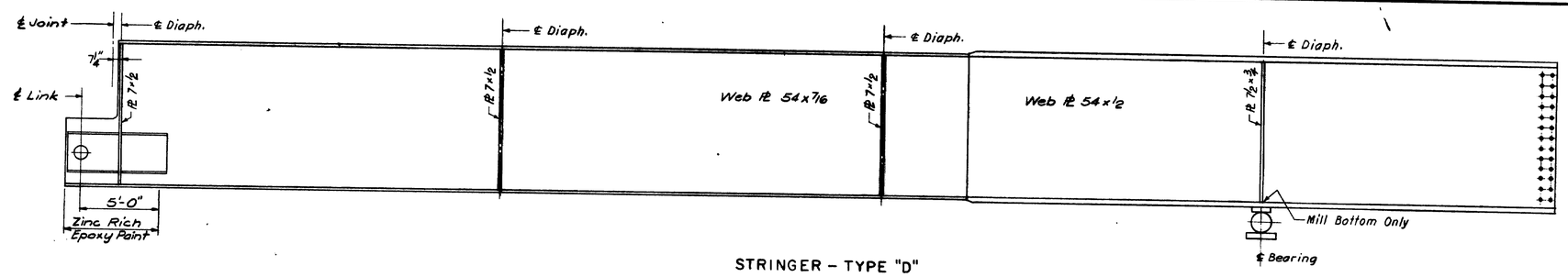

STRINGER – TYPE "D"

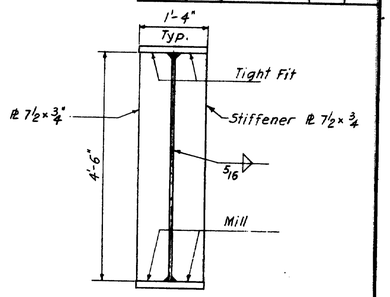

SECTION AT BEARING
INTERIOR & FASCIA STRINGERS
Scale: ¾"=1'-0"

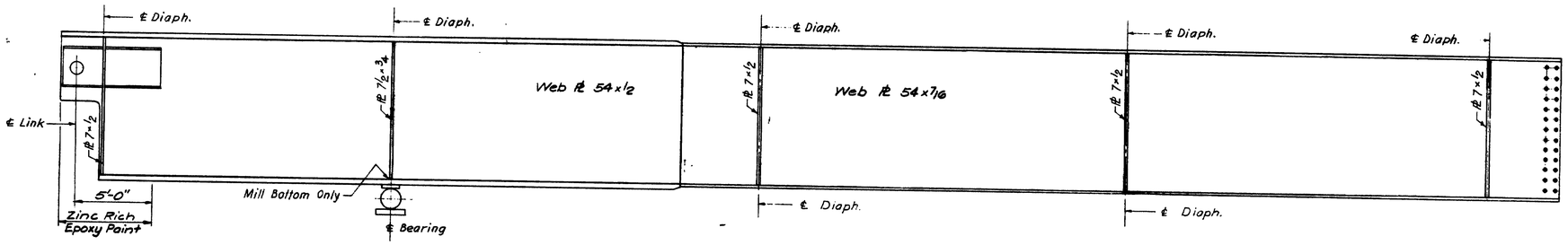

STRINGER – TYPE "F1"

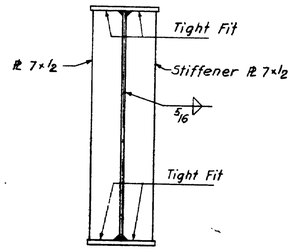

SECTION AT DIAPHRAGM
INTERIOR STRINGERS
Scale: ¾"=1'-0"

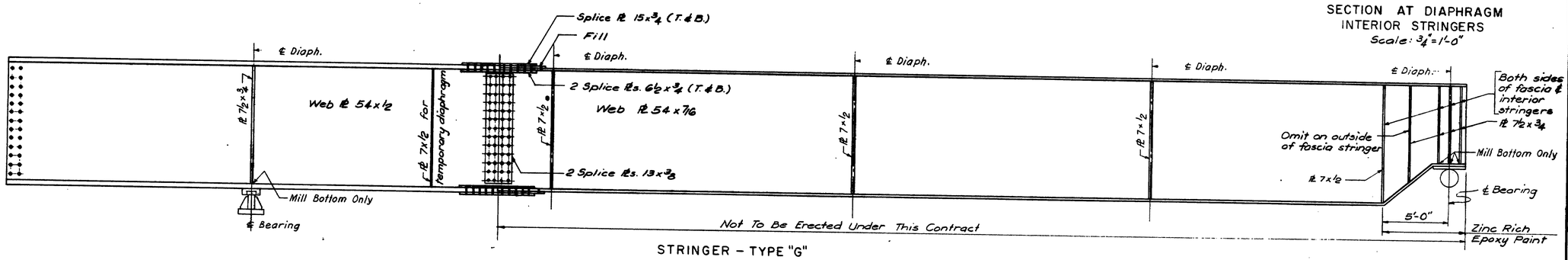

STRINGER – TYPE "G"

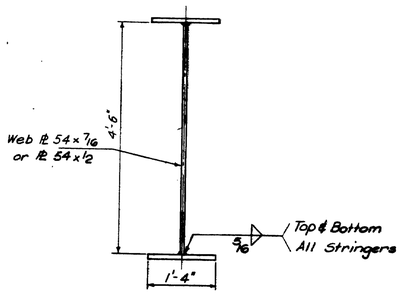

TYPICAL SECTION
INTERIOR STRINGERS
Scale: ¾"=1'-0"

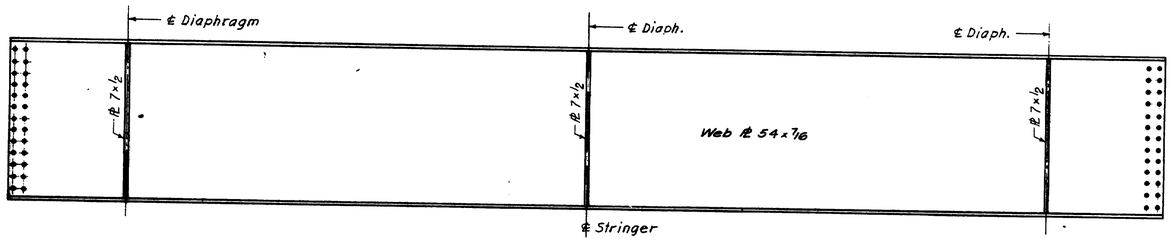

STRINGER – TYPE "E2"

2

DESIGN – [illegible]
TRACE – [illegible]
CHECK – [illegible]
BRIDGE NO. IN CHARGE OF – R. W. Christie

NEW HAMPSHIRE
DEPARTMENT OF PUBLIC WORKS AND HIGHWAYS
AND
MAINE STATE HIGHWAY COMMISSION
INTERSTATE 95 BRIDGE
OVER
PISCATAQUA RIVER
BETWEEN
PORTSMOUTH, NEW HAMPSHIRE AND KITTERY, MAINE
APPROACH SPANS

HARDESTY & HANOVER
CONSULTING ENGINEERS
NEW YORK, N. Y.

STRINGER TYPES II

SHEET 10 OF 14

129-24

B. P. R. REG. NO.	STATE	PROJECT NUMBER	SHEET NO.	TOTAL SHEETS
1	MAINE	I-95-1(22)16	11	14

		North Anchor Pier		Pier 1N		Pier 2N		Pier 3N		Pier 4N		Pier 5N		Pier 6N		Pier 7N		Pier 8N		Pier 9N		Pier 10N		Pier 11N		Pier 12N		Pier 13N		North Abutment
MOMENT	Dead Load	0	+879	-1,430	+304	-1,080	+479	-1,210	+475	-1060	+590	-1,140	+479	-1,222	+475	-995	+475	-1,400	+692	-1,400	+475	-995	+475	-1,222	+431	-1,129	+440	-1,070	+404	0
	Max. Live Load	0	+782	-1,039	+612	-907	+623	-990	+620	-774	+605	-795	+560	-956	+620	-822	+594	-899	+677	-899	+594	-822	+620	-893	+603	-891	+574	-719	+564	0
	Max. Impact	0	+179	-236	+138	-207	+140	-290	+140	-226	+139	-232	+126	-282	+140	-240	+134	-197	+145	-197	+134	-240	+140	-201	+137	-201	+131	-172	+144	0
	Maximum Moment	0	+1,840	-2,705	+1,054	-2,194	+1,242	-2,490	+1,235	-2,060	+1,334	-2,167	+1,165	-2,460	+1,235	-2,057	+1,203	-2,496	+1,514	-2,496	+1,203	-2,057	+1,235	-2,316	+1,171	-2,221	+1,145	-1,961	+1,112	0
	Min. Live Load	0	-193	+144	-311	+214	-310	+307	-310	+193	-106	+157	-239	+298	-310	+145	-215	+229	-250	+229	-215	+145	-310	+310	-308	+394	-235	+228	-212	0
	Min. Impact	0	-44	+32	-70	+45	-70	+69	-70	+56	-31	+46	-70	+88	-70	+42	-48	+50	-54	+50	-48	+42	-70	+70	-69	+88	-53	+54	-54	0
	Minimum Moment	0	+642	-1,254	-77	-821	+99	-834	+95	-811	+453	-937	+170	-836	+95	-808	+212	-1,121	+388	-1,121	+212	-808	+95	-842	+54	-647	+152	-788	+138	0
SHEAR	Dead Load	+48		+74		+57		+57		+57		+57		+57		+57		+75		+75		+59		+59		+59		+67		+40
	Max. Live Load	+38		+46		+44		+44		+44		+44		+44		+44		+48		+48		+43		+43		+43		+45		+36
	Max. Impact	+9		+10		+10		+10		+10		+10		+10		+10		+11		+11		+10		+10		+10		+10		+8
	Maximum Shear	+95		+130		+111		+111		+111		+111		+111		+111		+134		+134		+112		+112		+112		+122		+84
	Min. Live Load	-3		-1		-7		-7		-7		-7		-7		-7		-2		-2		-7		-7		-7		-5		-6
	Min. Impact	-1		—		-2		-2		-2		-2		-2		-2		—		—		-2		-2		-2		-1		-2
	Minimum Shear	+44		+73		+48		+48		+48		+48		+48		+48		+73		+73		+50		+50		+50		+61		+32
	Design Moment	0	+1,840	-2,705	+1,054	-2,194	+1,242	-2,490	+1,235	-2,060	+1,334	-2,167	+1,165	-2,460	+1,235	-2,057	+1,203	-2,496	+1,514	-2,496	+1,203	-2,057	+1,235	-2,316	+1,171	-2,221	+1,145	-1,961	+1,112	0
	Allow. Stress	20.0	20.0	20.0	19.5	20.0	20.0	20.0	20.0	20.0	20.0	20.0	20.0	20.0	20.0	20.0	20.0	20.0	20.0	20.0	20.0	20.0	20.0	20.0	20.0	20.0	20.0	20.0	20.0	20.0
	S.M. Required	0	1,104	1,623	649	1,316	745	1,494	741	1,236	800	1,300	699	1,476	741	1,234	722	1,498	908	1,498	722	1,234	741	1,390	703	1,333	687	1,177	667	0
	S.M. Provided	—	1,205	1,635	855	1,421	855	1,527	855	1,313	855	1,310	855	1,527	855	1,310	855	1,527	962	1,527	855	1,310	855	1,421	855	1,421	855	1,205	855	855
	Design Shear	95		130		111		111		111		111		111		111		134		134		112		112		112		122		84
	Area req. @ 12 ksi	7.9		10.8		9.3		9.3		9.3		9.3		9.3		9.3		11.2		11.2		9.3		9.3		9.3		10.2		7.0
	Area Provided	15.6		27.0		27.0		27.0		27.0		27.0		27.0		27.0		27.0		27.0		27.0		27.0		27.0		27.0		27.0

8 Spans @ 97'-0" = 776'-0" | 108'-0" | 4 Spans @ 97'-0" = 388'-0" | 72'-0"

STRINGER STRESS SHEET

Moments at center of Spans and over Supports
Shear at Supports

UNITS

Moment	Foot-kips
Shear	kips
Unit Stress	kips per square inch
Section Modulus	Inches cubed
Area	Square inches

NOTE:
Maximum shear is the larger of the two shear values at each bearing.

LOAD	No. Anch. Pier				Pier 1				Pier 2				Pier 3				Pier 4				Pier 5				Pier 6				Pier 7				Pier 8				Pier 9				Pier 10				Pier 11				Pier 12				Pier 13			
	1/5	2/5	3/5	4/5	1 1/5	1 2/5	1 3/5	1 4/5	2 1/5	2 2/5	2 3/5	2 4/5	3 1/5	3 2/5	3 3/5	3 4/5	4 1/5	4 2/5	4 3/5	4 4/5	5 1/5	5 2/5	5 3/5	5 4/5	6 1/5	6 2/5	6 3/5	6 4/5	7 1/5	7 2/5	7 3/5	7 4/5	8 1/5	8 2/5	8 3/5	8 4/5	9 1/5	9 2/5	9 3/5	9 4/5	10 1/5	10 2/5	10 3/5	10 4/5	11 1/5	11 2/5	11 3/5	11 4/5	12 1/5	12 2/5	12 3/5	12 4/5	13 1/4	13 1/2	13 3/4
Steel	1/8	3/16	3/16	1/16	—	1/16	1/16	—	1/16	1/16	1/16	1/16	1/16	1/16	1/16	1/16	1/16	1/16	1/16	1/16	1/16	1/16	1/16	1/16	1/16	1/8	1/8	1/16	1/16	1/16	1/16	—	1/16	1/8	1/8	1/16	—	1/16	1/16	1/16	1/16	1/8	1/8	1/16	1/16	1/16	1/16	1/16	1/16	1/8	1/8	1/16	1/16	1/16	1/16
Concrete	5/8	15/16	15/16	7/16	1/8	1/4	1/4	1/8	1/8	3/8	3/8	1/8	5/16	7/16	7/16	3/16	3/16	3/8	3/8	3/16	3/16	7/16	7/16	3/16	1/4	1/2	1/2	1/4	1/8	5/16	1/4	1/8	1/4	3/8	3/8	1/4	1/16	1/4	5/16	1/8	1/4	7/16	7/16	3/16	1/8	7/16	7/16	3/16	1/4	9/16	9/16	1/4	1/8	1/4	1/8
Asphalt	1/16	1/8	1/8	1/16	—	—	—	—	—	1/16	5/16	—	—	1/16	1/16	—	—	1/16	1/16	—	—	1/16	1/16	—	—	1/16	1/16	—	—	1/16	1/16	—	—	1/16	1/16	—	—	1/16	1/16	—	—	1/16	1/16	—	—	1/16	1/16	—	—	1/16	1/16	1/16	1/16	—	—	—
TOTAL	15/16	1 1/4	1 1/8	9/16	1/8	5/16	5/16	1/8	3/16	1/2	1/2	3/16	1/4	9/16	9/16	1/4	1/4	1/2	1/2	1/4	3/16	9/16	9/16	1/4	3/16	11/16	11/16	5/16	3/16	7/16	3/8	1/8	5/16	15/16	15/16	3/16	1/16	3/8	7/16	3/16	3/16	5/8	5/8	1/4	3/16	9/16	9/16	1/4	3/8	3/4	3/4	3/8	3/16	5/16	3/16

Stringers 1-14

DEAD LOAD DEFLECTIONS FOR STRINGERS

2

DESIGN — C. H. Barnes
TRACE — A. D. Zehenkell
CHECK — S. S. Nichols
BRIDGE NO. IN CHARGE OF — R. W. Christie

NEW HAMPSHIRE
DEPARTMENT OF PUBLIC WORKS AND HIGHWAYS
AND
MAINE STATE HIGHWAY COMMISSION
INTERSTATE 95 BRIDGE
OVER
PISCATAQUA RIVER
BETWEEN
PORTSMOUTH, NEW HAMPSHIRE AND KITTERY, MAINE

STRINGER DATA

SHEET 11 OF 14

HARDESTY & HANOVER
CONSULTING ENGINEERS
NEW YORK, N. Y.

129-25

S.P.R. REG. NO.	STATE	PROJECT NUMBER	SHEET NO.	TOTAL SHEETS
1	MAINE	I-95-1(22)16	12	14

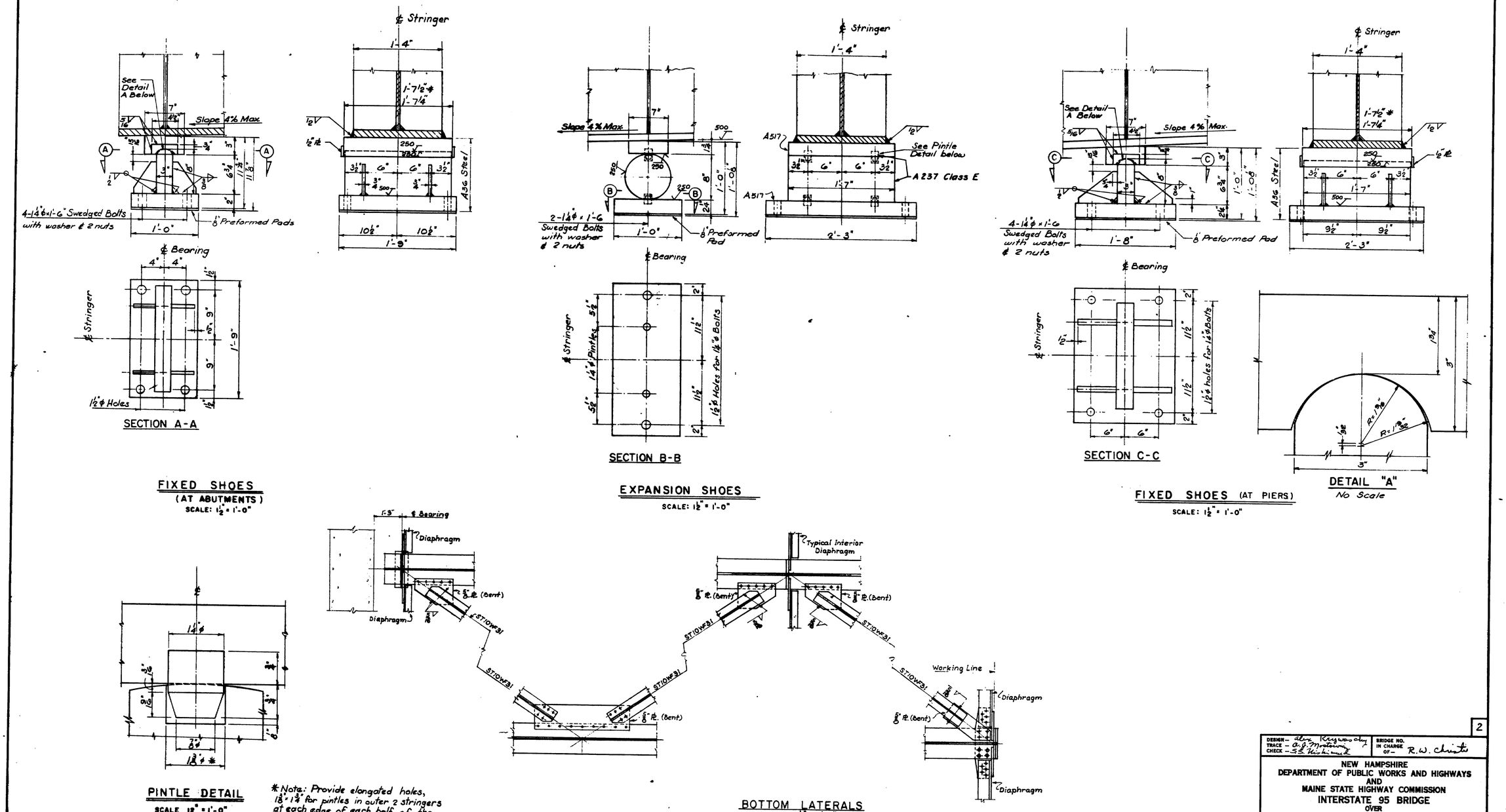

*Note: Provide elongated holes, 1⅜" × 1¾" for pintles in outer 2 stringers at each edge of each half of the structure to allow for transverse expansion of structure. In typical section, stringers 1, 2, 6, 7, 8, 9, 13 & 14 would have elongated holes for expansion shoes and 1'-7½" for fixed shoes as noted.

2

DESIGN – Alex Krzywoschy
TRACE – A.J. Mostowicz
CHECK – S.S. Nishimura
BRIDGE NO. IN CHARGE OF – R.W. Christie

NEW HAMPSHIRE
DEPARTMENT OF PUBLIC WORKS AND HIGHWAYS
AND
MAINE STATE HIGHWAY COMMISSION
INTERSTATE 95 BRIDGE
OVER
PISCATAQUA RIVER
BETWEEN
PORTSMOUTH, NEW HAMPSHIRE AND KITTERY, MAINE
APPROACH SPANS
SHOES
BOTTOM LATERALS

HARDESTY & HANOVER
CONSULTING ENGINEERS
NEW YORK, N. Y.

SHEET 12 OF 14

129-26

B. P. R. REG. NO.	STATE	PROJECT NUMBER	SHEET NO.	TOTAL SHEETS
1	MAINE	I-95-1 (22)16	13	14

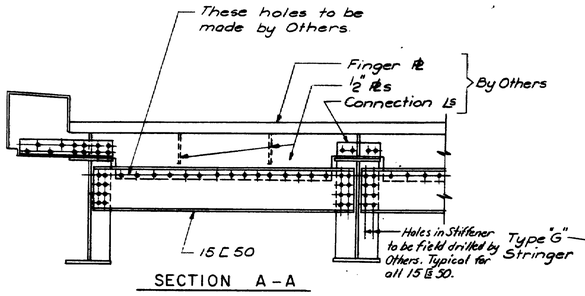

SECTION A-A

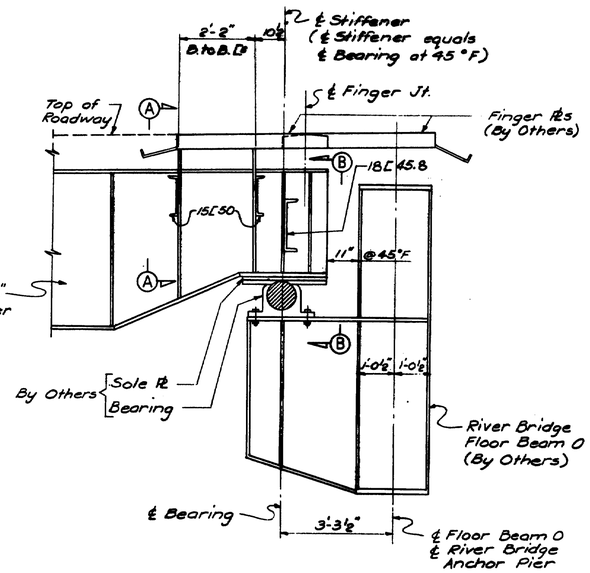

DETAIL AT RIVER BRIDGE

Scale: ½" = 1'-0"

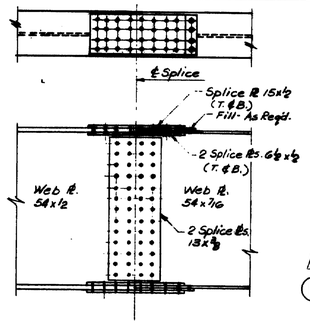

TYPICAL SPLICE

Except for Type "G" Stringer

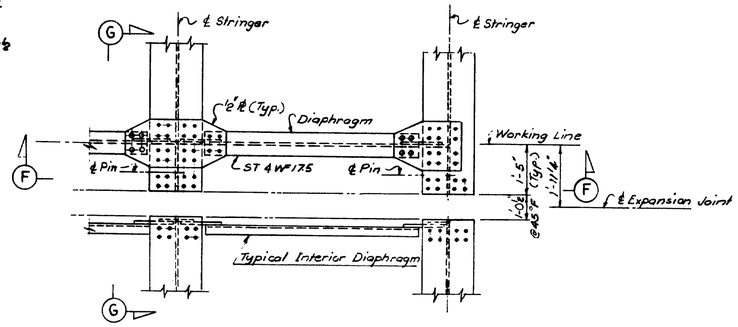

PLAN SECTION E-E

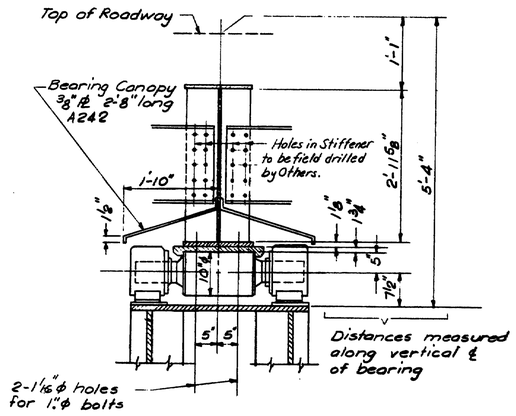

SECTION B-B

Scale: ¾" = 1'-0"

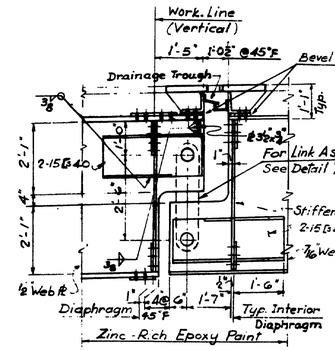

SECTION G-G

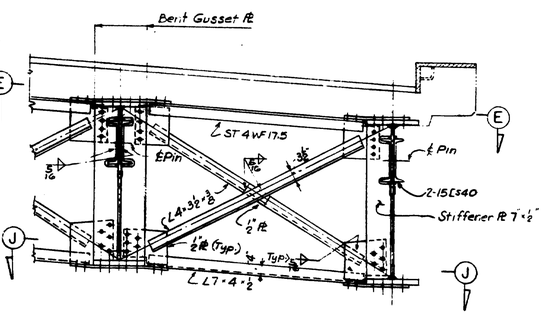

SECTION F-F

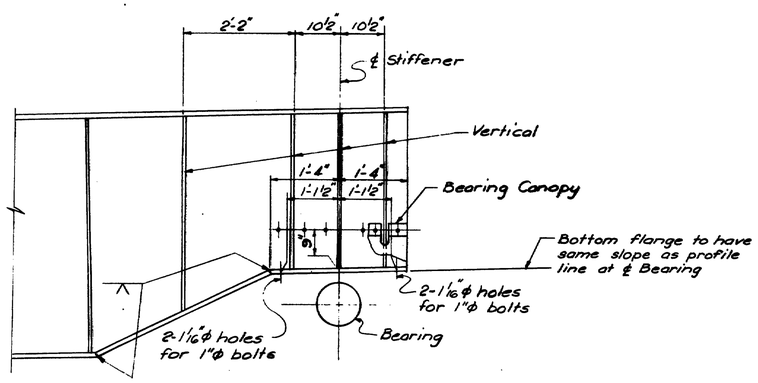

TYPE "G" STRINGER

END DETAILS

Scale: ¾" = 1'-0"

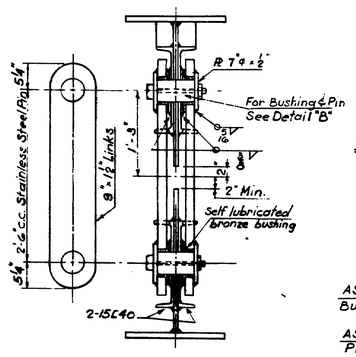

DETAIL "A"

SCALE: 1" = 1'-0"

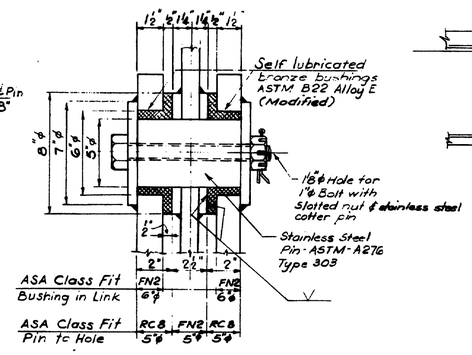

DETAIL "B"

SCALE: 3" = 1'-0"

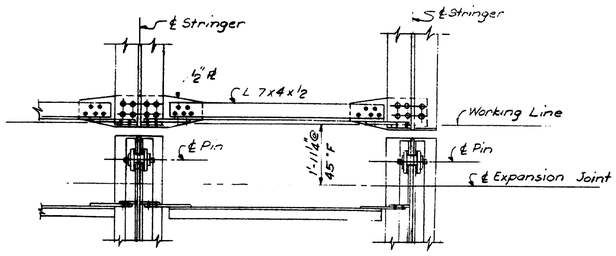

SECTION J-J

2

DESIGN – Alan Raymond
TRACE – A. J. Montanaro
CHECK – S. S. Fitchmunt

BRIDGE NO. IN CHARGE OF – K. W. Christie

NEW HAMPSHIRE
DEPARTMENT OF PUBLIC WORKS AND HIGHWAYS
AND
MAINE STATE HIGHWAY COMMISSION
INTERSTATE 95 BRIDGE
OVER
PISCATAQUA RIVER
BETWEEN
PORTSMOUTH, NEW HAMPSHIRE AND KITTERY, MAINE
APPROACH SPANS

STEEL DETAILS I

SHEET 13 OF 14

HARDESTY & HANOVER
CONSULTING ENGINEERS
NEW YORK, N. Y.

129-27

B. P. R. REG. NO.	STATE	PROJECT NUMBER	SHEET NO.	TOTAL SHEETS
1	MAINE	I-95-1(22)16	14	14

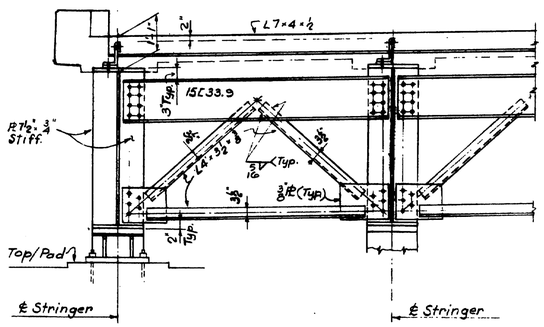

TYPICAL DIAPHRAGM AT ABUTMENTS

SCALE: ½" = 1'-0" (TYP. UNLESS NOTED)

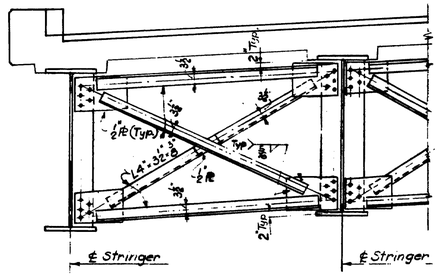

TYPICAL INTERIOR DIAPHRAGM

(On Typical Interior Diaphragms adjacent to expansion joints, field drill bolt holes after alignment of hanger links.)

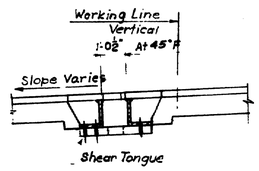

SECTION L-L

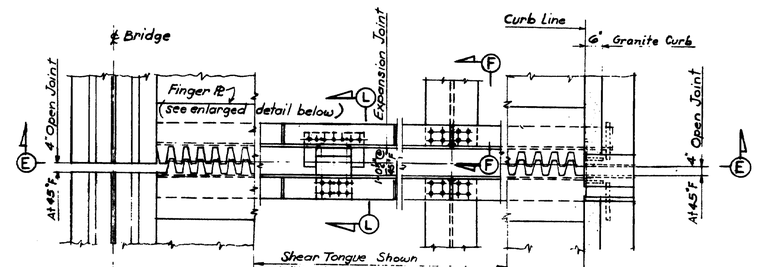

TYPICAL PLAN OF EXPANSION JOINT

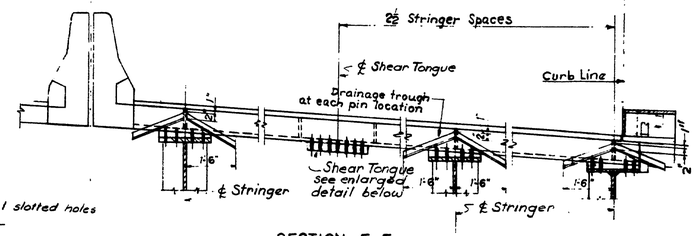

SECTION E-E

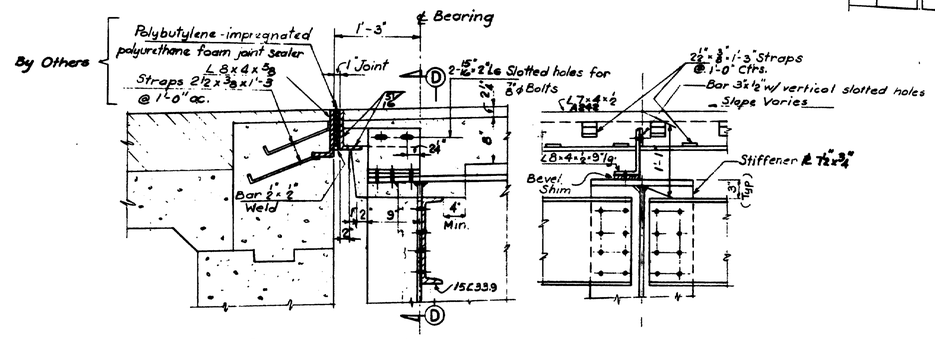

JOINT DETAIL AT ABUTMENTS

SCALE: 1" = 1'-0"

SECTION D-D

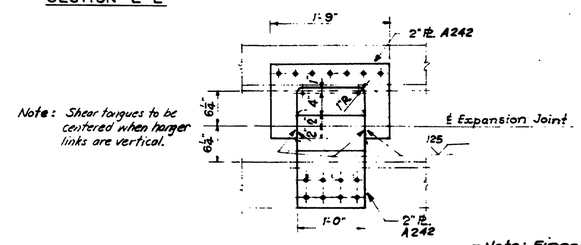

SHEAR TONGUE DETAIL

Scale: 1" = 1'-0"

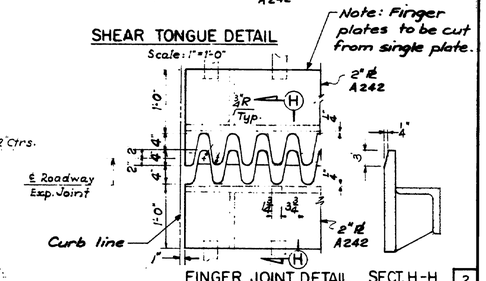

FINGER JOINT DETAIL SECT. H-H

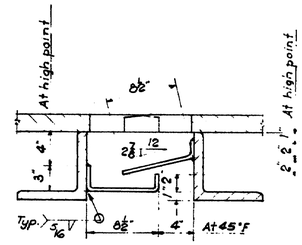

DETAIL OF DRAINAGE TROUGH

Scale: 1½" = 1'-0"

Trough material: ⅜" bent PL - "Corrosion Resisting" ASTM A242 Steel

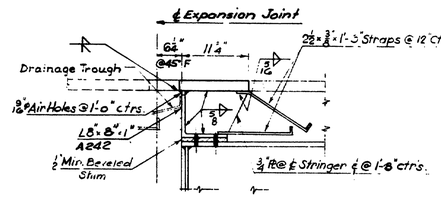

SECTION F-F

DESIGN –	BRIDGE NO. IN CHARGE OF – R.W. Christie
TRACE –	
CHECK –	

NEW HAMPSHIRE
DEPARTMENT OF PUBLIC WORKS AND HIGHWAYS
AND
MAINE STATE HIGHWAY COMMISSION

INTERSTATE 95 BRIDGE
OVER
PISCATAQUA RIVER
BETWEEN
PORTSMOUTH, NEW HAMPSHIRE AND KITTERY, MAINE

APPROACH SPANS

STEEL DETAILS II

SHEET 14 OF 14

HARDESTY & HANOVER
CONSULTING ENGINEERS
NEW YORK, N. Y.

129-28