STATE OF MAINE
DEPARTMENT OF TRANSPORTATION

MILFORD
PENOBSCOT COUNTY
SECOND OTTER BRIDGE
OVER
OTTER STREAM
COUNTY ROAD
FEDERAL AID PROJECT NO. BR-1666(700)X
PROJECT LENGTH 0.114 mi.
BRIDGE NO. 2754

WIN 16667.00

BR-1666(700)X

SPECIFICATIONS

Design: Load and Resistance Factor Design per AASHTO LRFD Bridge Design Specifications, Sixth Edition 2012.

DESIGN LOADING

Live Load ..... HL - 93 Modified

TRAFFIC DATA

Current (2010) AADT	1540
Future (2030) AADT	1850
DHV - % of AADT	12%
Design Hour Volume	222
Heavy Trucks (% of AADT)	12%
Heavy Trucks (% of DHV)	10%
Directional Distribution (% of DHV)	65%
18 kip Equivalent P 2.0	171
18 kip Equivalent P 2.5	163
Design Speed (mph)	35

HYDROLOGIC DATA

Drainage Area	85 sq mi
Design Discharge (Q50)	2600 cfs
Check Discharge (Q100)	2800 cfs
Headwater Elevation (Q50)	98.53 ft
Headwater Elevation (Q100)	98.88 ft
Discharge Velocity (Q50)	3.21 fps
Discharge Velocity (Q100)	3.23 fps
Headwater Elevation (Q1.1)	93.91 ft
Discharge Velocity (Q1.1)	2.16 fps
Headwater Elevation (Q25)	97.92 ft

MATERIALS

Concrete:
- Curbs & Transition Barriers ..... Class "LP"
- All Other ..... Class "A"

Reinforcing Steel ..... ASTM A 615/A 615M, Grade 60

Structural Steel:
- All Material (except as noted) ..... ASTM A 709, Grade 50W (unpainted)
- High Strength Bolts ..... ASTM A 325, Type 3

BASIC DESIGN STRESSES

Concrete ..... f 'c = 4,350 psi

Reinforcing Steel ..... f y = 60,000 psi

Structural Steel:
- ASTM A 709, Grade 50W ..... F y = 50,000 psi
- ASTM A 709, Grade 36 ..... F y = 36,000 psi
- ASTM A 325 ..... F μ = 120,000 psi

LIST OF DRAWINGS

Title Sheet	1
Estimated Quantities	2
General Plan	3
Profile	4
Boring Location Plan	5
Interpretive Subsurface Profile	6
Boring Logs	7
Cross Sections	8-17
Abutment No. 1	18
Abutment No. 2	19
Abutment Details	20
Abutment Reinforcing	21
Abutment Sections	22
Framing Plan	23
Structural Steel Details	24
Superstructure Plan	25
Superstructure Reinforcing	26
Reinforcing Steel Schedule	27
Right-of-Way Maps	28-29

UTILITIES

Bangor Hydro-Electric Company
Fairpoint Communications
Time Warner Cable (Bangor Central Office)

MAINTENANCE OF TRAFFIC

Maintain one 12'-0" lane of two-way alternating traffic using single lane temporary bridge.

PROJECT LOCATION:	On County Road 0.59 miles Northerly of Richards Lane. Lat./Long. 44°56'44.58" N 68°36'41.12"W
PROGRAM AREA:	Bridge
OUTLINE OF WORK:	Bridge Replacement with 450 feet of approach work

HNTB

STATE OF MAINE
DEPARTMENT OF TRANSPORTATION
APPROVED
DATE
COMMISSIONER: 2/5/13
CHIEF ENGINEER: 2/5/13

STATE OF MAINE ROLAND A. LAVALLEE No. 6452 PROFESSIONAL ENGINEER

SIGNATURE
6452
P.E. NUMBER
1/31/13
DATE

PROJECT INFORMATION

PROGRAM	BRIDGE
PROJECT MANAGER	STEVE BODGE, P.E.
DESIGNER	TIM COTE, P.E.
CONSULTANT	HNTB CORP.
PROJECT RESIDENT	
CONTRACTOR	
PROJECT COMPLETION DATE	

MILFORD
SECOND OTTER BRIDGE

TITLE SHEET

SHEET NUMBER
1
OF 29

Date:1/25/2013 Username: mcundiff Division: BRIDGE Filename601_Title.dgn

ITEM NO.	DESCRIPTION	QUANTITY	UNIT
202.19	Removing Existing Bridge (Structural Steel = 137 Tons, Concrete = 205 CY)	1	LS
203.20	Common Excavation	1,150	CY
203.2318	Disposal of Special Waste	140	TON
203.24	Common Borrow	990	CY
203.25	Granular Borrow	460	CY
304.10	Aggregate Subbase Course - Gravel	1,050	CY
403.208	Hot Mix Asphalt, 12.5 mm Nominal Maximum Size, Surface	185	TON
403.213	Hot Mix Asphalt, 12.5 mm Nominal Maximum Size, Base	360	TON
409.15	Bituminous Tack Coat, Applied	85	GAL
501.231	Dynamic Loading Test	2	EA
501.54	Steel H-beam Piles 117 lb/ft, delivered	430	LF
501.541	Steel H-beam Piles 117 lb/ft, in place	430	LF
501.90	Pile Tips	8	EA
501.91	Pile Splices	4	EA
501.92	Pile Driving Equipment Mobilization	1	LS
502.219	Structural Concrete, Abutments and Retaining Walls (113 CY)	1	LS
502.26	Structural Concrete Roadway and Sidewalk Slab on Steel Bridges (120 CY)	1	LS
502.31	Structural Concrete Approach Slab (62 CY)	1	LS
502.49	Structural Concrete Curbs and Sidewalks (20 CY)	1	LS
503.12	Reinforcing Steel, Fabricated and Delivered	31,900	LB
503.13	Reinforcing Steel, Placing	31,900	LB
504.702	Structural steel fabricated and delivered, welded (238,000 lbs)	1	LS
504.71	Structural steel erection (238,000 lbs)	1	LS
505.08	Shear Connectors (1808 EA)	1	LS
507.0811	Steel Bridge Railing, 2 Bar (284 LF)	1	LS
508.14	High Performance Waterproofing Membrane (600 SY)	1	LS
510.10	Special Detour, 12 foot Roadway Width Vehicular and Pedestrican Traffic Not Seperated	1	LS
512.081	French Drains (96 LF)	1	LS
514.06	Curing Box for Concrete Cylinders	1	EA
515.21	Protective Coating for Concrete Surfaces (200 SY)	1	LS
520.232	Expansion Device - Asphaltic Plug Joint	56	LF
526.301	Temporary Concrete Barrier, Type I (40 LF)	1	LS
526.34	Permanent Concrete Transition Barrier	4	EA
606.1721	Bridge Transition - Type I	4	EA
606.23	Guardrail Type 3c - Single Rail	525	LF
606.353	Reflectorized Flexible Guardrail Marker	8	EA
606.79	Guardrail 350 Flared Terminal	4	EA
610.08	Plain Riprap	1,310	CY
610.18	Stone Ditch Protection	20	CY
613.319	Erosion Control Blanket	62	SY
615.07	Loam	70	CY
618.1401	Seeding Method Number 2, Plan Quantity	11	UN
619.1201	Mulch, Plan Quantity	11	UN
619.1401	Erosion Control Mix	50	CY
620.58	Erosion Control Geotextile	780	SY
621.101	Plug/Starter Plant	50	EA
621.014	Evergreen Trees 18" - 24" Gr. A Cont.	50	EA
621.510	Hybrid Rhododendron (15" - 18")	50	EA
621.54	Decid. Shrubs/Trees 18" - 24" Gr. A Cont.	60	EA
627.733	4" White or Yellow Painted Pavement Marking Line	2,400	LF
629.05	Hand Labor, Straight Time	20	HR
631.12	All Purpose Excavator (including operator)	20	HR
631.14	Grader (including operator)	10	HR
631.15	Roller, Earth and Base Course (including operator)	10	HR
631.172	Truck-large (including operator)	20	HR
639.19	Field Office, Type B	1	EA
645.106	Demount Regulatory, Warning, Confirmation and Route Marker Assembly Sign	8	EA
645.108	Demount Pole	8	EA
645.116	Reinstall Regulatory, Warning, Confirmation and Route Marker Assembly Sign	8	EA
645.118	Reinstall Pole	8	EA
652.312	Type III Barricades	8	EA
652.33	Drum	30	EA
652.34	Cone	40	EA
652.35	Construction Signs	315	SF
652.361	Maintenance of Traffic Control Devices (460 CD)	1	LS
652.38	Flaggers	320	HR
656.75	Temporary Soil Erosion and Water Pollution Control	1	LS
659.10	Mobilization	1	LS

GENERAL CONSTRUCTION NOTES

1. The clearing limits as shown on the plans are approximate. The exact limits will be established in the field by the Resident. Payment for clearing will be considered incidental to Contract items.

2. For easements, construction limits and right of way lines, refer to Right of Way Maps.

3. All utility facilities shall be adjusted by the respective utilities unless otherwise noted.

4. Do no excavate for Aggregate Subbase Course where existing material is suitable as determined by the Resident.

5. In areas where the Resident directs the Contractor not to excavate to the subgrade line shown on the plans, payment for removing existing pavement, grubbing, shaping, ditching, and compacting the existing subbase and layers of new subbase 6 inches or less thick will be made under appropriate equipment rental items.

6. All embankment material, except as otherwise shown, placed below EL. 93.91 shall be Granular Borrow meeting the requirements of Subsection 703.19, Material for Underwater Backfill.

7. Place loam 2 inches deep on all new or reconstructed sideslopes or as directed by the Resident.

8. Erosion Control Mix may be substituted in those areas normally receiving loam and seed as directed by the Resident. Placement shall be in accordance with Standard Specifications Section 619, Mulch. Payment will be made under Item No. 619.1401, Erosion Control Mix.

9. Place a 24-in. wide strip of Temporary Erosion Control Blanket on the sideslopes along the top of riprap and behind the wingwalls.

10. An NCHRP350 compliant guardrail end treatment shall be installed concurrently with the placement of each section of beam guardrail.

11. Place a 4-ft wide strip of Extended Use Erosion Control Blanket along the bottom of all ditches.

12. Extended Use Erosion Control Blanket, seeded gutters, riprap downspouts, and other gutters lined with Stone Ditch Protection shall be constructed after paving and shoulder work is completed, where it is apparent that runoff will cause continual erosion. Payment will be made under the appropriate Contract items.

13. Protective Coating for Concrete Surfaces shall be applied to the following areas:

All exposed surfaces of concrete curbs,
Fascias down to the drip notch,
All exposed surfaces of Concrete Transition Barriers,
Top of abutment backwalls and to one foot below the top of backwalls on the back side.

14. Project information referred to below may be accessed at the following MaineDOT web address: http://www.maine.gov/mdot/contractors/index.shtml.

15. The existing bridge plans may be accessed at the MaineDOT web address. The plans are reproductions of the original drawings as prepared for the construction of the bridge. It is very unlikely that the plans will show any construction field changes or any alterations which may have been made to the bridge during its life span.

16. The hydrologic report of the bridge site may be accessed at the MaineDOT web address. The hydrologic report is based on MaineDOT's interpretation of the information obtained for the subject site. No assurance is given that the information or the conclusions of the report will be representative of actual conditions at the time of construction.

17. The project geotechnical report titled: Geotechnical Design Report for the Replacement of: Second Otter Bridge Over Otter Chain Stream, Soils Report No. 2012-33, December 20, 2012 may be accessed at the MaineDOT web address.

18. Geotechnical information furnished or referred to in this plan set is for the use of the Bidders and the Contractor. No assurance is given that the information or interpretations will be representative of actual subsurface conditions at the construction site. MaineDOT will not be responsible for the Bidder's or Contractor's interpretations of, or conlusions drawn from, the geotechnical information. The boring logs contained in the plan set present factual and interpretive subsurface information collected at discrete locations. Data provided may not be representative of the subsurface condtions between the boring locations.

19. Quantities included for pay items measured and paid for by Lump Sum are estimated quantities and are provided by MaineDOT for informational purposes only. Lump Sum pay items will be paid for at the Contract Bid amount, with no addition or reduction in payment to the Contractor if the actual final quantities are different from the MaineDOT provided estimated quantities, except as follows:

a. If a Lump Sum pay item is eliminated, the requirements of Standard Specifications Section 109.2, Elimination of Items, will take precedence.

b. If other Contract Documents specifically allow a change in payment for a Lump Sum pay item, those requirements will be followed.

c. If a design change results in changes to estimated quantities for Lump Sum pay items, price adjustments will be made in accordance with Standard Specifications Section 109.7, Equitable Adjustments to Compensation.

20. The Contractor shall submit a Bridge Demolition Plan to the Resident at least 10 business days prior to the start of demolition work. The plan shall outline the methods and equipment to be used to remove and dispose of all materials included in the existing bridge. No work related to the removal of the bridge shall be undertaken by the Contractor until MaineDOT has reviewed the Bridge Demolition Plan for appropriateness and completeness. Payment for all work necessary for developing, submitting and finalizing the demolition Plan will be considered incidental to the bridge removal pay item.

21. The existing bridge shall be removed by and become the property of the Contractor. The steel portions of the existing bridge are coated with a lead-based paint system. The Contractor is responsible for the containment, proper management and disposal of all lead-contaminated hazardous waste generated by the process of demolishing the bridge. The Contractor is responsible for implementing appropriate OSHA mandated personal protection standards related to this process. Once the existing bridge is removed, the Contractor is solely responsible for the care, custody and control of the components of the existing bridge and any hazardous waste generated as a result of the storage, recycling or disposal of the bridge components, including lead-coated steel. The Contractor shall recycle or reuse the steel in accordance with the Maine Department of Environmental Protection's "Maine Hazardous Waste Management Regulations," Chapter 850. A copy of this regulation is available at MaineDOT's offices on Child Street in Augusta. Payment for all labor, materials, equipment and other costs required to remove and dispose of the existing bridge will be considered incidental to the bridge removal pay item.

22. All costs for cofferdams, including pumping, maintenance, related temporary soil erosion and water pollution controls and removal, will not be paid for directly, but will be considered incidental to related Contract items.

23. The pavement sawcutting and sealing immediately behind each abutment shall not be paid for directly. Payment shall be considered incidental to the related contract items.

HNTB

STATE OF MAINE
DEPARTMENT OF TRANSPORTATION

BR-1666(700)X

WIN 16667.00

BRIDGE NO. 2754

BRIDGE PLANS

PROJ. MANAGER	S. Bodge	BY	DATE
DESIGN-DETAILED	T. Cote	M. Cundiff	01\13
CHECKED-REVIEWED	J. Waugh	L. Meek	01\13
DESIGN2-DETAILED2	-	-	-
DESIGN3-DETAILED3	-	-	-
REVISIONS 1	-	-	-
REVISIONS 2	-	-	-
REVISIONS 3	-	-	-
REVISIONS 4	-	-	-
FIELD CHANGES	-	-	-

SIGNATURE

P.E. NUMBER

DATE

SECOND OTTER BRIDGE
OTTER STREAM
MILFORD PENOBSCOT COUNTY

ESTIMATED QUANTITIES

SHEET NUMBER
2
OF 29

Filename: 002_Estimate.dgn Division: BRIDGE Username: jdwaugh Date:2/21/2013

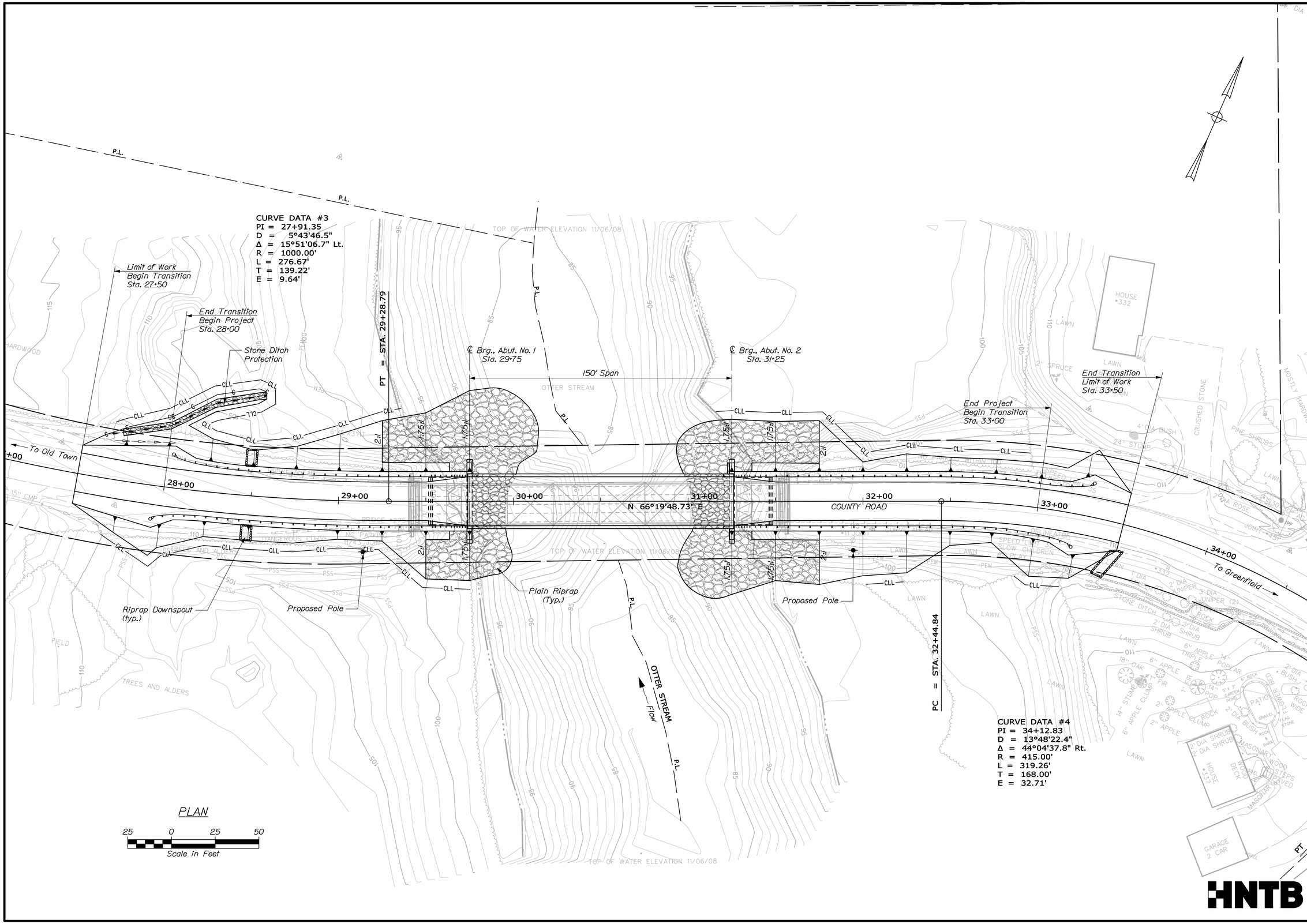

HNTB

STATE OF MAINE
DEPARTMENT OF TRANSPORTATION

BR-1666(700)X

WIN 16667.00

BRIDGE NO. 2754

BRIDGE PLANS

		BY	DATE
PROJ. MANAGER	S. Bodge		
DESIGN-DETAILED	L. Meek	M. Cundiff	01\13
CHECKED-REVIEWED	T. Cole	J. Waugh	01\13
DESIGN2-DETAILED2	-	-	-
DESIGN3-DETAILED3	-	-	-
REVISIONS 1	-		-
REVISIONS 2	-		-
REVISIONS 3	-		-
REVISIONS 4	-		-
FIELD CHANGES	-		-

SIGNATURE

P.E. NUMBER

DATE

SECOND OTTER BRIDGE
OTTER STREAM
MILFORD PENOBSCOT COUNTY

GENERAL PLAN

SHEET NUMBER

3

OF 29

Filename: 003_GenPlan.dgn Division: BRIDGE Username: MCundiff Date:1/31/2013

HNTB

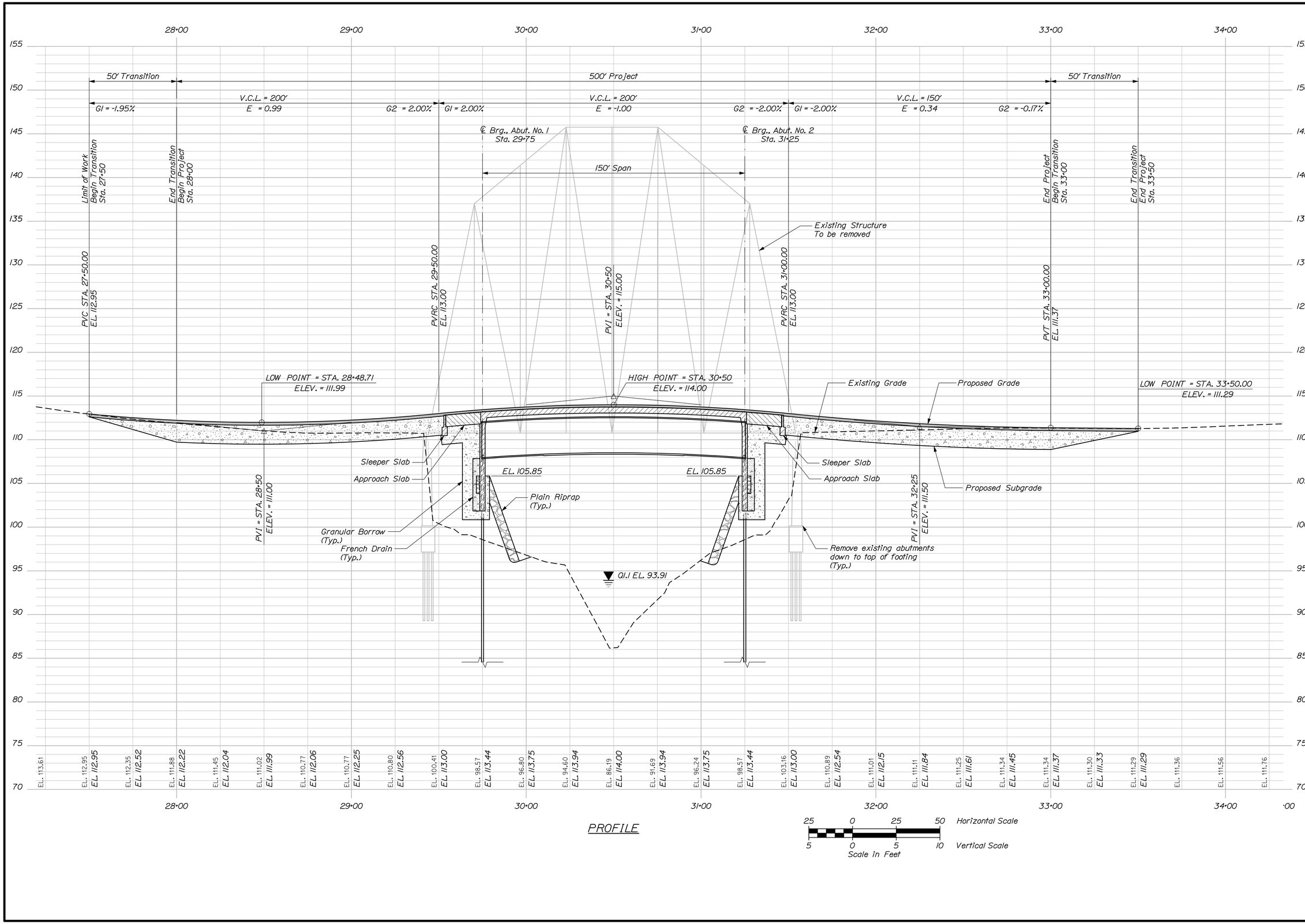

PROFILE

STATE OF MAINE
DEPARTMENT OF TRANSPORTATION

BR-1666(700)X

WIN 16667.00

BRIDGE NO. 2754

BRIDGE PLANS

	BY	DATE
PROJ. MANAGER	S. BOOKE	
DESIGN-DETAILED	B. REEVES	D.E.S.	AUG 2011
CHECKED-REVIEWED		M.R.P.
DESIGN2-DETAILED2		
DESIGN3-DETAILED3		
REVISIONS 1		
REVISIONS 2		
REVISIONS 3		
REVISIONS 4		
FIELD CHANGES		

SIGNATURE

P.E. NUMBER

DATE

SECOND OTTER BRIDGE
OTTER STREAM
MILFORD PENOBSCOT COUNTY

PROFILE

SHEET NUMBER

4

OF 29

Sta. 27+50.00 to Sta. 34+00.00

Filename: 004_Profile.dgn Division: BRIDGE Username: MCundiff Date:1/31/2013

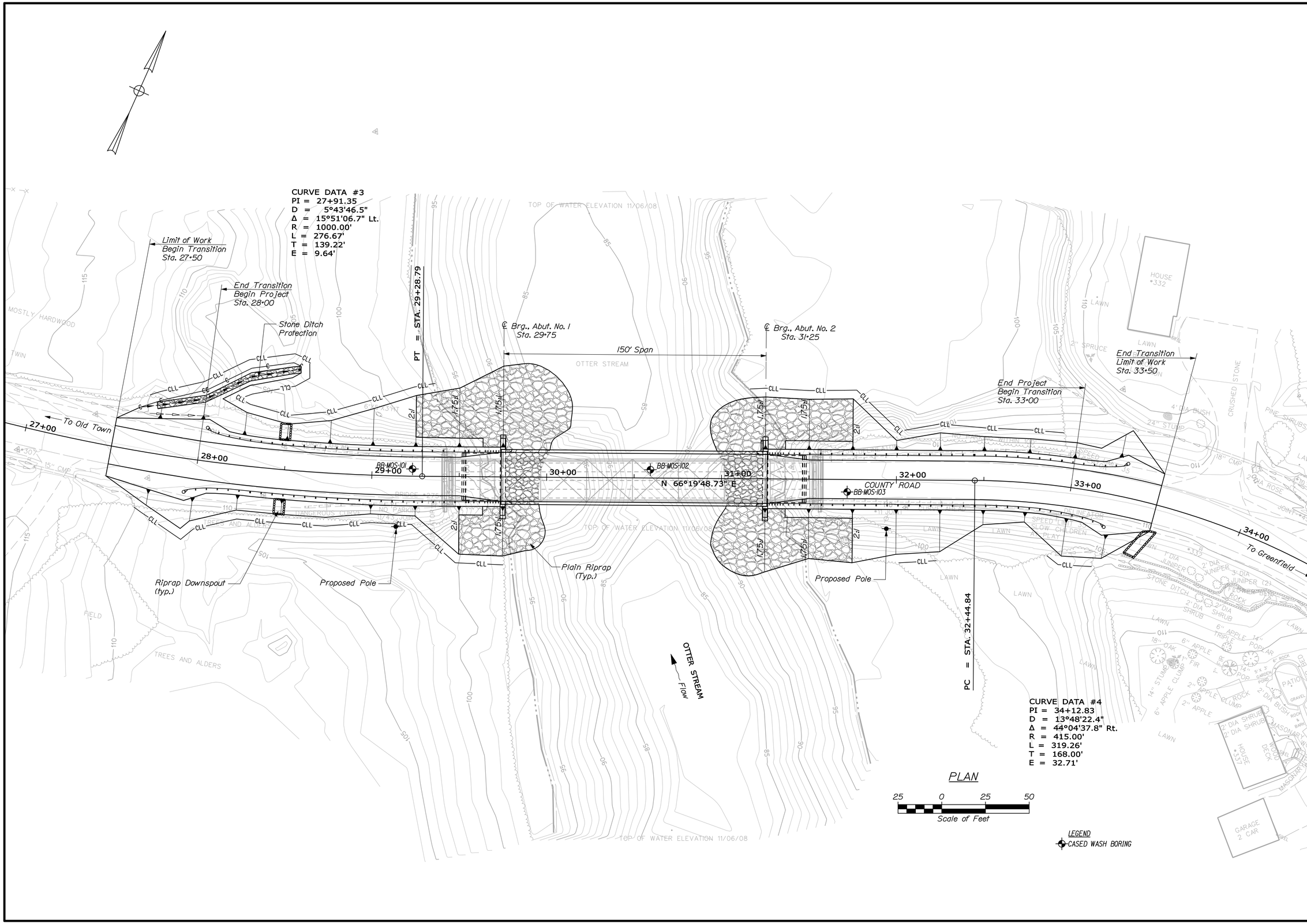

STATE OF MAINE
DEPARTMENT OF TRANSPORTATION

BR-1666(700)X

WIN 16667.00

BRIDGE NO. 2754

BRIDGE PLANS

PROJ. MANAGER	S. BOOSE	BY	DATE
DESIGN-DETAILED	M.MOREAU	T.WHITE	AUG 2010
CHECKED-REVIEWED			
DESIGN2-DETAILED2			
DESIGN3-DETAILED3			
REVISIONS 1			
REVISIONS 2			
REVISIONS 3			
REVISIONS 4			
FIELD CHANGES			

SIGNATURE

P.E. NUMBER

DATE

SECOND OTTER BRIDGE
OTTER STREAM
MILFORD PENOBSCOT COUNTY

BORING LOCATION PLAN

SHEET NUMBER

5

OF 29

Filename: 005_BLP1.dgn Division: BRIDGE Username: MCundiff Date:1/31/2013

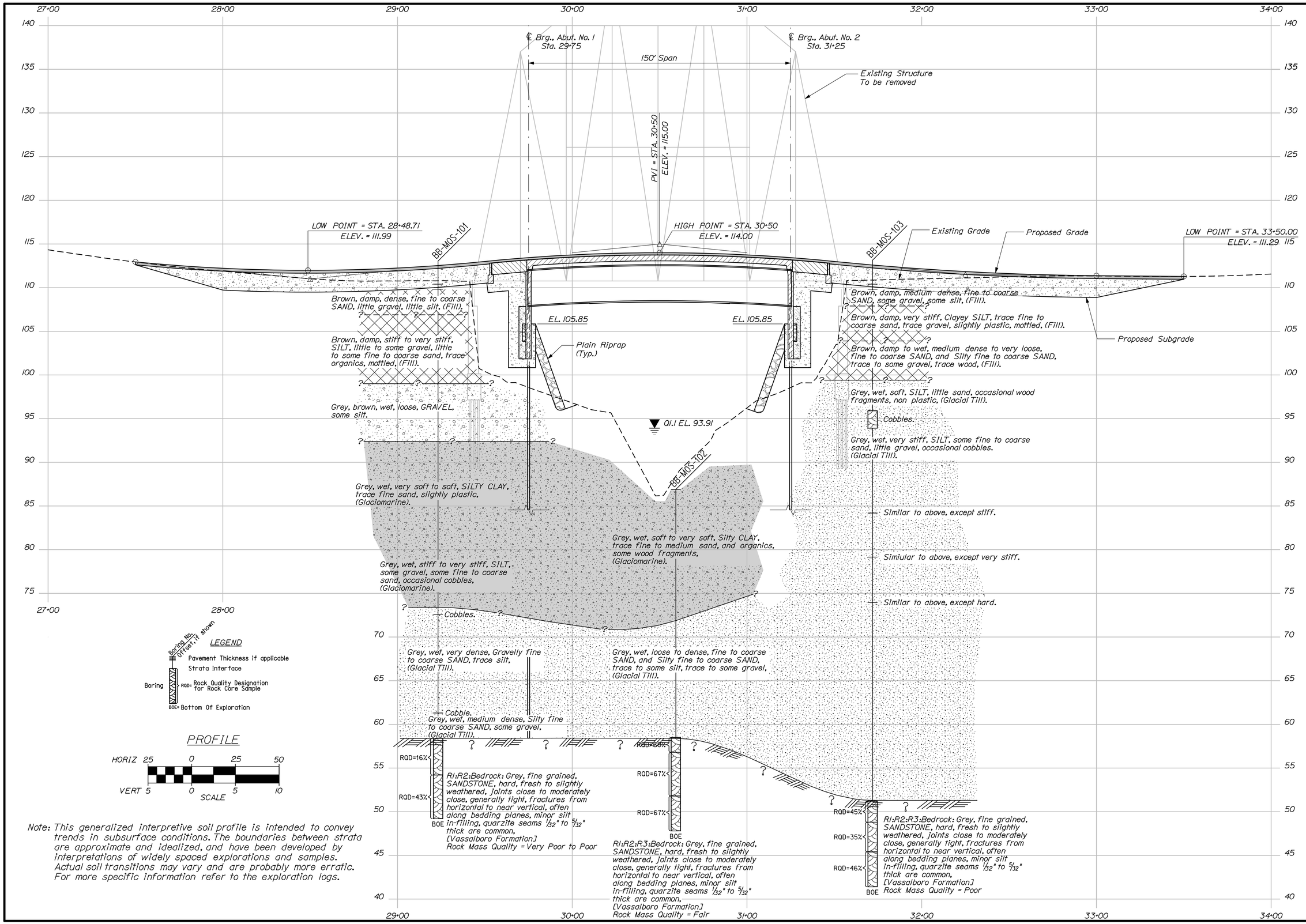

Note: This generalized interpretive soil profile is intended to convey trends in subsurface conditions. The boundaries between strata are approximate and idealized, and have been developed by interpretations of widely spaced explorations and samples. Actual soil transitions may vary and are probably more erratic. For more specific information refer to the exploration logs.

STATE OF MAINE
DEPARTMENT OF TRANSPORTATION

BR-1666(700)X

WIN 16667.00

BRIDGE NO. 2754

BRIDGE PLANS

PROJ. MANAGER	S. BOOSE	BY	DATE
DESIGN-DETAILED	M.MOREAU	T.WHITE	DEC 2012
CHECKED-REVIEWED			
DESIGN2-DETAILED2			
DESIGN3-DETAILED3			
REVISIONS 1			
REVISIONS 2			
REVISIONS 3			
REVISIONS 4			
FIELD CHANGES			

SIGNATURE

P.E. NUMBER

DATE

SECOND OTTER BRIDGE
OTTER STREAM
MILFORD PENOBSCOT COUNTY

INTERPRETIVE SUBSURFACE PROFILE

SHEET NUMBER
6
OF 29

Filename: 006_ISP1.dgn Division: BRIDGE Username: MCundiff Date:1/31/2013

Filename: 007_BORING LOGS1.dgn Division: BRIDGE Username: MCundiff Date:1/31/2013

Maine Department of Transportation
Soil/Rock Exploration Log
US CUSTOMARY UNITS

Project: Second Otter Bridge #2754 carries County Road over Otter Stream
Location: Milford, Maine

Boring No.: BB-MDS-101
WIN: 16667.00

Driller:	MaineDOT	Elevation (ft.)	110.4	Auger ID/OD:	5" Solid Stem
Operator:	Giguere	Datum	NAVD88	Sampler:	Standard Split Spoon
Logged By:	M. Foley	Rig Type:	CME 45C	Hammer Wt./Fall:	140#/30"
Date Start/Finish:	7/19/10-7/20/10	Drilling Method:	Cased Wash Boring	Core Barrel:	NQ-2"
Boring Location:	29+23.2, 4.1 ft Lt.	Casing ID/OD:	HW & NW	Water Level*:	13.0' bgs
Hammer Efficiency Factor: 0.84		Hammer Type:	Automatic ☒ Hydraulic ☐ Rope & Cathead ☐		

Definitions:
D = Split Spoon Sample
MD = Unsuccessful Split Spoon Sample attempt
U = Thin Wall Tube Sample
MU = Unsuccessful Thin Wall Tube Sample attempt
V = Insitu Vane Shear Test, PP = Pocket Penetrometer
MV = Unsuccessful Insitu Vane Shear Test attempt
H = Hand Core Sample
SSA = Solid Stem Auger
HSA = Hollow Stem Auger
RC = Roller Cone
WOH = weight of 140lb. hammer
WOR = weight of rods or casing
WO1P = Weight of one person
S_u = Insitu Field Vane Shear Strength (psf)
T_v = Pocket Torvane Shear Strength (psf)
q_p = Unconfined Compressive Strength (ksf)
N-uncorrected = Raw field SPT N-value
Hammer Efficiency Factor = Annual Calibration Value
N_{60} = SPT N-uncorrected corrected for hammer efficiency
N_{60} = (Hammer Efficiency Factor/60%)*N-uncorrected
$S_{u(lab)}$ = Lab Vane Shear Strength (psf)
W_c = Water content, percent
LL = Liquid Limit
PL = Plastic Limit
PI = Plasticity Index
G = Grain Size Analysis
C = Consolidation Test

Depth (ft.)	Sample No.	Pen./Rec. (in.)	Sample Depth (ft.)	Blows (/6 in.) Shear Strength (psf) or RQD (%)	N-uncorrected	N_{60}	Casing Blows	Elevation (ft.)	Visual Description and Remarks	Laboratory Testing Results/ AASHTO and Unified Class
0							SSA	109.80	7" Pavement (0.60)	
	1D	24/3	1.00 - 3.00	8/14/21/14	35	49			Brown, damp, dense, fine to coarse SAND, little gravel, little silt, (Fill).	GM239836 A-1-b, SM WC=3.8%
								106.90	(3.50)	
5	2D	24/6	5.00 - 7.00	6/3/4/5	7	10			Brown, damp, stiff, SILT, some gravel, some fine to coarse sand, (Fill).	GM239837 A-4, SM WC=9.2%
10	3D	24/6	10.00 - 12.00	10/8/10/6	18	25	PUSH		Brown, damp, very stiff, SILT, little gravel, little fine to coarse sand, trace organics, mottled, (Fill).	GM239838 A-4, ML WC=19.7%
							11	99.00	(11.40) Based on survey, original ground is at approximately 11.4' bgs, at approximate elevation 99.0'.	
							61		Casing blows indicate a change at 13.0' bgs.	
							110			
							105			
15	4D	24/2	15.00 - 17.00	2/3/2/3	5	7	33		Grey brown, wet, loose, GRAVEL, some silt.	
							47			
							51		Small chunks of PEAT noted in wash water coming up at 17.0' bgs.	
							65	92.40	(18.00) Wash water changes from brown to grey at 18.0' bgs.	
							74			
20	MV/50	24/22	20.00 - 22.00	WOH/WOH/WOH/WOH	---		62		Failed vane attempt at 20.0' bgs, would not push.	GM239839 A-4, CL WC=28.7% LL=33 PL=22 PI=10
							63		Grey, wet, very soft, Silty CLAY, trace fine sand, slightly plastic, (Glaciomarine).	
							74			
							72			
							68			
25	6D V2A	24/24	25.00 - 27.00	push thru vane Su=402/87 psf	---		62		Grey, wet, soft, Silty CLAY, trace fine sand, slightly plastic, (Glaciomarine).	GM239840 A-6, CL WC=38.5% LL=35 PL=23 PI=12
	V2B		25.37 - 25.60	Su=402/45 psf			52		55x110 mm vane raw torque readings: V2A: 9.0/1.5 ft-lbs V2B: 9.0/1.0 ft-lbs	
			26.40 - 26.97				53			
							54	81.40	(29.00)	
30	7D/MU	24/12	30.00 - 32.00	3/3/5/6	8	11	52		Failed tube attempt, tube would not push. Grey, wet, stiff, SILT, some gravel, some fine to coarse sand, occasional cobbles, (Glaciomarine).	
							72			
							71			
							67			
35	8D	24/13	35.00 - 37.00	4/5/7/7	12	17	62		Grey, wet, very stiff, SILT, some gravel, some fine to coarse sand, occasional cobbles, (Glaciomarine).	GM239841 A-4, ML WC=12.0%
							56	73.40	(37.00)	
							067		067 blows for 0.8'.	
							OPEN		Probable Cobble/Boulder at 37.8' bgs. Roller Coned down to 38.5' bgs. Cored from 38.5-42.0' bgs, cored through 0.5' cobble and 1.2' hard Till.	
							HOLE			
40							18			
							49		Washed ahead to 45.0' bgs, then telescoped NW Casing down hole.	
							63			
							108			
							81			
45	9D	24/8	45.00 - 47.00	47/47/32/21	79	111	27		Grey, wet, very dense, Gravelly fine to coarse SAND, trace silt, (Glacial Till).	
							78			
							80			
							158			
							64		Cored through 0.6' Quartzite Cobble at 49.1' bgs.	
50	10D	18/10	50.50 - 52.00	7/8/12	20	28	60			
							60			
	R1	50.4/50.4	52.00 - 56.20	RQD = 16%			NQ-2 CORE	58.40	(52.00) Spoon refusal at 52.0' bgs. Top of Bedrock at Elev. 58.4'. Bedrock: Grey, fine grained, SANDSTONE, hard, fresh to slightly weathered, joints close to moderately close, generally tight, fractures from horizontal to near vertical often along bedding planes, minor silt infilling, quartzite seams 1/32" to 5/32" thick are common. (Vassalboro Formation). Rock Mass Quality = Very Poor to Poor. RtiCore Times (minisec) 52.0-53.0' (8:00) 53.0-54.0' (3:00) 54.0-55.0' (3:15) 55.0-56.0' (5:00) 56.0-56.2' (3:45) 100% Recovery RZiCore Times (minisec) 56.2-57.2' (4:00) 57.2-58.2' (6:15) 58.2-59.2' (6:30) 59.2-60.2' (6:45) 60.2-61.2' (6:45) 100% Recovery	
55										
	R2	60/60	56.20 - 61.20	RQD = 43%						
60								49.20	(61.20) Bottom of Exploration at 61.20 feet below ground surface.	
65										
70										
75										

Remarks:
Rock Coring Down Pressure 500 lbs.

Stratification lines represent approximate boundaries between soil types; transitions may be gradual.

* Water level readings have been made at times and under conditions stated. Groundwater fluctuations may occur due to conditions other than those present at the time measurements were made.

Page 1 of 1
Boring No.: BB-MDS-101

Maine Department of Transportation
Soil/Rock Exploration Log
US CUSTOMARY UNITS

Project: Second Otter Bridge #2754 carries County Road over Otter Stream
Location: Milford, Maine

Boring No.: BB-MDS-102
WIN: 16667.00

Driller:	MaineDOT	Elevation (ft.)	86.9	Auger ID/OD:	5" Solid Stem
Operator:	Giguere	Datum	NAVD88	Sampler:	Standard Split Spoon
Logged By:	M. Foley	Rig Type:	CME 45C	Hammer Wt./Fall:	140#/30"
Date Start/Finish:	7/21/10-7/22/10	Drilling Method:	Cased Wash Boring	Core Barrel:	NQ-2"
Boring Location:	30+59.3, 4.7 ft Lt.	Casing ID/OD:	HW & NW	Water Level*:	Water Boring
Hammer Efficiency Factor: 0.84		Hammer Type:	Automatic ☒ Hydraulic ☐ Rope & Cathead ☐		

Definitions:
D = Split Spoon Sample
MD = Unsuccessful Split Spoon Sample attempt
U = Thin Wall Tube Sample
MU = Unsuccessful Thin Wall Tube Sample attempt
V = Insitu Vane Shear Test, PP = Pocket Penetrometer
MV = Unsuccessful Insitu Vane Shear Test attempt
H = Hand Core Sample
SSA = Solid Stem Auger
HSA = Hollow Stem Auger
RC = Roller Cone
WOH = weight of 140lb. hammer
WOR = weight of rods or casing
WO1P = Weight of one person
S_u = Insitu Field Vane Shear Strength (psf)
T_v = Pocket Torvane Shear Strength (psf)
q_p = Unconfined Compressive Strength (ksf)
N-uncorrected = Raw field SPT N-value
Hammer Efficiency Factor = Annual Calibration Value
N_{60} = SPT N-uncorrected corrected for hammer efficiency
N_{60} = (Hammer Efficiency Factor/60%)*N-uncorrected
$S_{u(lab)}$ = Lab Vane Shear Strength (psf)
W_c = Water content, percent
LL = Liquid Limit
PL = Plastic Limit
PI = Plasticity Index
G = Grain Size Analysis
C = Consolidation Test

Depth (ft.)	Sample No.	Pen./Rec. (in.)	Sample Depth (ft.)	Blows (/6 in.) Shear Strength (psf) or RQD (%)	N-uncorrected	N_{60}	Casing Blows	Elevation (ft.)	Visual Description and Remarks	Laboratory Testing Results/ AASHTO and Unified Class
0	1D	24/03	0.00 - 2.00	5/2/1-12"	3	4	HW PUSH		03" recovery 1st attempt, sent spoon down a 2nd time 24" recovery.	
									Grey, wet, soft, Silty CLAY, trace fine sand and organics, some wood fragments, (Glaciomarine).	
5	2D V1A	24/12	5.00 - 7.00	push thru vane Su=45/45 psf	---				Grey, wet, very soft, Silty CLAY, trace fine to medium sand.	GM239842 A-4, CL WC=51.2% LL=32 PL=23 PI=9
	V1B		5.37 - 5.60	Su=134/45 psf					55x110 mm raw torque readings: V1A: 1.0/1.0 ft-lbs V1B: 3.0/1.0 ft-lbs	
			6.40 - 6.97							
10	PMU								Pushed casing to 10.3' bgs on 21 July, had to push below bridge deck for overnight, missed shelby tube at 10.5'.	
15	3D MV	24/24	14.00 - 16.00	WOR/WOR/8/11	8	11			Telescoped NW Casing at 14.0' bgs. Grey, wet, stiff, Silty CLAY, trace fine to coarse sand, trace gravel, (Glaciomarine). Failed 55x110 mm vane attempt, would not push.	
			14.00					71.90	(15.00)	
							66		Grey, wet, medium dense, Silty fine to coarse SAND, little gravel, (Glacial Till).	
							34			
							68			
							31			
20	4D	24/10	20.60 - 22.60	38/13/21/17	34	48	37		Grey, wet, dense, fine to coarse SAND, some silt, some gravel, (Glacial Till).	GM239843 A-2-4, SM WC=6.7%
							45			
							56			
							43			
							SUNK			
25	5D	24/7	25.00 - 27.00	4/3/4/4	7	10	26		Grey, wet, loose, fine to coarse SAND, some gravel, some silt, (Glacial Till).	
							24			
							22			
	R1	20.4/16	28.40 - 30.10	RQD = 60%			NQ-2	58.40	(28.50) Top of Bedrock at Elev. 58.4'. Bedrock: Grey, fine grained, SANDSTONE, hard, fresh to slightly weathered, joints close to moderately close, generally tight, fractures from horizontal to near vertical often along bedding planes, minor silt infilling, quartzite seams 1/32" to 5/32" thick are common. (Vassalboro Formation). Rock Mass Quality = Fair. RtiCore Times (minisec) 28.4-29.4' (4:18) 29.4-30.1' (6:00) 78% Recovery RZiCore Times (minisec) 30.1-31.1' (3:00) 31.1-32.1' (3:00) 32.1-33.1' (5:30) 33.1-34.1' (4:45) 34.1-35.1' (3:45) 103% Recovery RtiCore Times (minisec) 35.1-36.1' (5:00) 36.1-37.1' (4:30) 37.1-38.1' (3:45) 38.1-39.1' (3:18) 100% Recovery	
30	R2	60/62	30.10 - 35.10	RQD = 67%			CORE			
35	R3	48/48	35.10 - 39.10	RQD = 67%				47.80	(39.10) Bottom of Exploration at 39.10 feet below ground surface.	
40										
45										
50										

Remarks:
13.6' from Bridge Deck to top of water.
25.3' from Bridge Deck to Mudline. Mudline is 0 ft on this log.
7" thick Bridge Deck.

Stratification lines represent approximate boundaries between soil types; transitions may be gradual.

* Water level readings have been made at times and under conditions stated. Groundwater fluctuations may occur due to conditions other than those present at the time measurements were made.

Page 1 of 1
Boring No.: BB-MDS-102

Maine Department of Transportation
Soil/Rock Exploration Log
US CUSTOMARY UNITS

Project: Second Otter Bridge #2754 carries County Road over Otter Stream
Location: Milford, Maine

Boring No.: BB-MDS-103
WIN: 16667.00

Driller:	MaineDOT	Elevation (ft.)	110.4	Auger ID/OD:	5" Solid Stem
Operator:	Giguere	Datum	NAVD88	Sampler:	Standard Split Spoon
Logged By:	M. Foley	Rig Type:	CME 45C	Hammer Wt./Fall:	140#/30"
Date Start/Finish:	7/20/10-7/21/10	Drilling Method:	Cased Wash Boring	Core Barrel:	NQ-2"
Boring Location:	31+71.9, 7.1 ft Rt.	Casing ID/OD:	HW & NW	Water Level*:	11.2' bgs.
Hammer Efficiency Factor: 0.84		Hammer Type:	Automatic ☒ Hydraulic ☐ Rope & Cathead ☐		

Definitions:
D = Split Spoon Sample
MD = Unsuccessful Split Spoon Sample attempt
U = Thin Wall Tube Sample
MU = Unsuccessful Thin Wall Tube Sample attempt
V = Insitu Vane Shear Test, PP = Pocket Penetrometer
MV = Unsuccessful Insitu Vane Shear Test attempt
H = Hand Core Sample
SSA = Solid Stem Auger
HSA = Hollow Stem Auger
RC = Roller Cone
WOH = weight of 140lb. hammer
WOR = weight of rods or casing
WO1P = Weight of one person
S_u = Insitu Field Vane Shear Strength (psf)
T_v = Pocket Torvane Shear Strength (psf)
q_p = Unconfined Compressive Strength (ksf)
N-uncorrected = Raw field SPT N-value
Hammer Efficiency Factor = Annual Calibration Value
N_{60} = SPT N-uncorrected corrected for hammer efficiency
N_{60} = (Hammer Efficiency Factor/60%)*N-uncorrected
$S_{u(lab)}$ = Lab Vane Shear Strength (psf)
W_c = Water content, percent
LL = Liquid Limit
PL = Plastic Limit
PI = Plasticity Index
G = Grain Size Analysis
C = Consolidation Test

Depth (ft.)	Sample No.	Pen./Rec. (in.)	Sample Depth (ft.)	Blows (/6 in.) Shear Strength (psf) or RQD (%)	N-uncorrected	N_{60}	Casing Blows	Elevation (ft.)	Visual Description and Remarks	Laboratory Testing Results/ AASHTO and Unified Class
0							HSA	109.80	7" Pavement (0.60)	
	1D	24/11	1.00 - 3.00	6/10/10/4	20	28			Brown, damp, medium dense, fine to coarse SAND, some gravel, some silt, (Fill).	GM239844 A-2-4, SM WC=7.3%
								107.90	(2.50)	
5	2D/AB	24/19	5.00 - 7.00	2/4/5/12	9	13			Brown, damp, stiff, Clayey SILT, trace fine to coarse sand, trace gravel, slightly plastic, mottled, (Fill).	GM239845 A-6, CL WC=23.1% LL=33 PL=20 PI=13
								103.90	(6.50) 2D/B (6.5-7.0') Brown, damp, medium dense, fine to coarse SAND, some gravel, trace silt, (Fill).	
10	3D/AB	24/14	10.00 - 12.00	2/1/1/1	2	3	65		3D/A (10.0-11.0') Brown, wet, very loose, Silty fine to coarse SAND, trace gravel, 2 inch wood chunk, with iron stained layers, (Fill).	
							21	99.40	(11.00) 3D/B (11.0-12.0') Grey, wet, soft, SILT, little sand, occasional wood fragments, non-plastic, (Glacial Till). Based on survey, original ground is at approximately 12.4' bgs, at approximate elevation 99.0'.	
							58			
							219			
15							104 SHT		Probable Cobble/Boulder at 14.5'bgs. Roller Coned ahead to 15.0' bgs, then began Core run at 15.0' to 16.5'bgs. 0.8' Cobble stopped on 0.3' Cobble with Till in Core Barrel.	
							NQ-2			
	4D	24/13	16.50 - 18.50	6/8/8/8	16	22	PWT		Grey, wet, very stiff, SILT, some fine to coarse sand, little gravel, occasional cobbles, (Glacial Till).	GM239846 A-4, CL WC=10.8%
									Washed ahead of Casing from 15.0-31.0' bgs.	
20	5D	24/16	20.00 - 22.00	4/11/6/9	17	24			Similar to above.	
25	6D	24/10	25.00 - 27.00	8/5/3/4	8	11			Grey, wet, stiff, SILT, some fine to coarse sand, little gravel, occasional cobbles, (Glacial Till).	
30	7D	24/13	30.00 - 32.00	5/6/11/9	17	24			Grey, wet, very stiff, SILT, some fine to coarse sand, little gravel, (Glacial Till). Telescoped NW Casing at 31.0' bgs.	GM239847 A-4, CL WC=11.0%
							70			
							78			
							89			
							101			
35	8D	24/10	35.00 - 37.00	16/12/18/24	30	42	94		Similar to above, hard.	
							128			
							160			
							174			
							203			
40	9D	24/13	40.00 - 42.00	8/13/12/14	25	35	130		Similar to above.	
							165			
							216			
							270			
							324			
45	10D	24/19	45.00 - 47.00	11/11/13/14	24	34	245		Grey, wet, hard, SILT, some fine to coarse sand, little gravel, (Glacial Till).	GM239848 A-4, CL WC=9.7%
							256			
							337			
							348			
							486			
50	11D	24/10	50.00 - 52.00	15/24/15/8	39	55	94		Grey, wet, hard, SILT, some fine to coarse sand, little gravel, occasional cobbles, (Glacial Till).	
55	12D	24/14	55.00 - 57.00	11/18/32/25	50	70			Similar to above, with larger gravel pieces (Max Particle Size 1.75").	
60	R1	28.8/28.8	59.20 - 61.60	RQD = 45%			NQ-2 CORE	51.30	(59.10) Top of Bedrock at Elev. 51.3'. Roller Coned ahead to 59.2' bgs. Bedrock: Grey, fine grained SANDSTONE, hard, fresh to slightly weathered, joints close to moderately close, generally tight, fractures from horizontal to near vertical often along bedding planes, minor silt infilling, quartzite seams 1/32" to 5/32" thick are common. (Vassalboro Formation). Rock Mass Quality = Poor. RtiCore Times (minisec) 59.2-60.2' (3:45) 60.2-61.2' (4:00) 61.2-61.6' (1:00) 100% Recovery RtiCore Times (minisec) 61.6-62.6' (3:45) 62.6-63.6' (4:18) 63.6-64.6' (5:00) 64.6-65.0' (4:30) 93% Recovery RtiCore Times (minisec) 65.0-66.0' (5:30) 66.0-67.0' (3:18) 67.0-68.0' (5:00) 68.0-69.0' (3:30) 100% Recovery	
	R2	40.8/38	61.60 - 65.00	RQD = 35%						
65	R3	48/48	65.00 - 69.00	RQD = 46%				41.40	(69.00) Bottom of Exploration at 69.00 feet below ground surface.	
70										
75										

Remarks:
Rock Coring Down Pressure 500 lbs.

Stratification lines represent approximate boundaries between soil types; transitions may be gradual.

* Water level readings have been made at times and under conditions stated. Groundwater fluctuations may occur due to conditions other than those present at the time measurements were made.

Page 1 of 1
Boring No.: BB-MDS-103

STATE OF MAINE
DEPARTMENT OF TRANSPORTATION

BR-1666(700)X

WIN 16667.00

BRIDGE NO. 2754

BRIDGE PLANS

	BY	DATE
PROJ. MANAGER	S. BOGGE	
DESIGN-DETAILED	M.MOREAU	T.WHITE	DEC 2012
CHECKED-REVIEWED		
DESIGN2-DETAILED2		
DESIGN3-DETAILED3		
REVISIONS 1		
REVISIONS 2		
REVISIONS 3		
REVISIONS 4		
FIELD CHANGES		

SIGNATURE

P.E. NUMBER

DATE

SECOND OTTER BRIDGE
OTTER STREAM
MILFORD PENOBSCOT COUNTY

BORING LOGS

SHEET NUMBER
7
OF 29

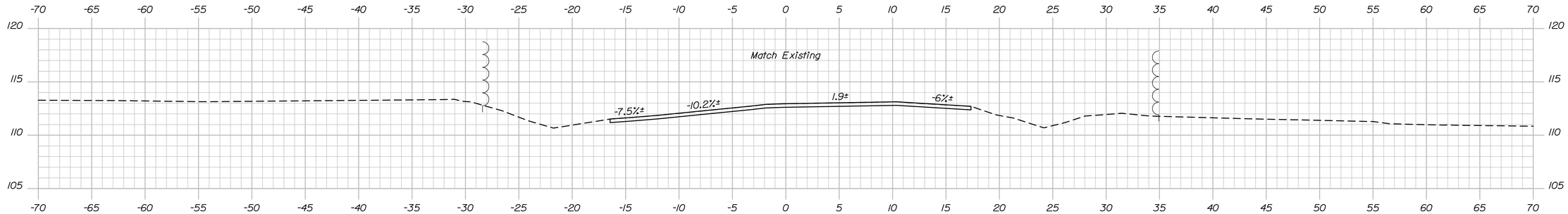

27+50.00
Begin Transition

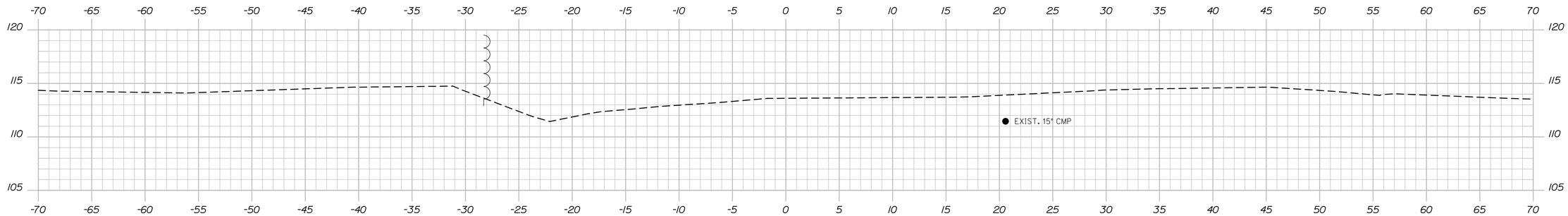

27+25.00

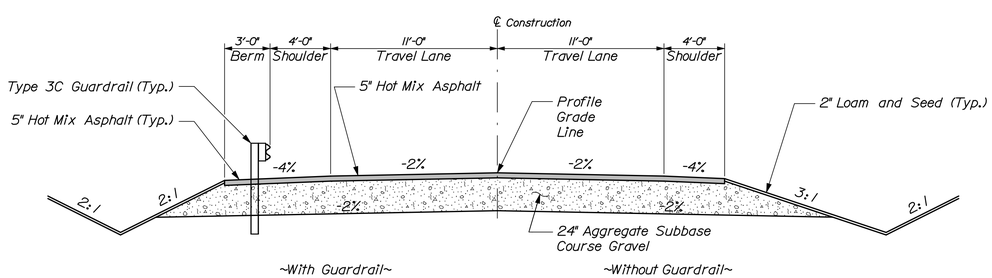

Proposed Approach Section
Normal Crown

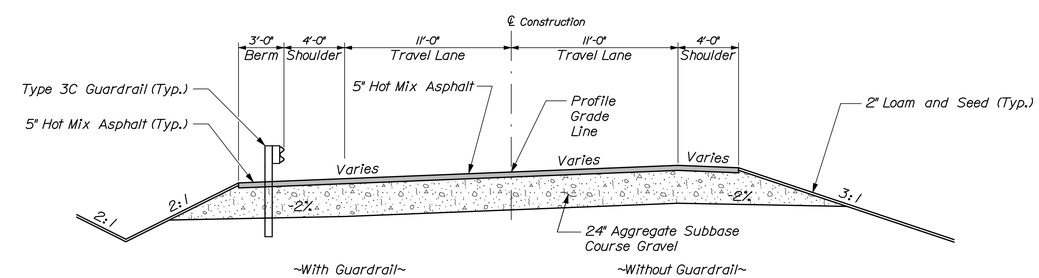

Proposed Approach Section
Superelevated

STATE OF MAINE
DEPARTMENT OF TRANSPORTATION

BR-1666(700)X

WIN 19423.00
$(PCF_BRIDGENUMBER)

BRIDGE PLANS

PROJ. MANAGER	S. Bodge	BY	DATE
DESIGN-DETAILED	A. Tower	M. Cundiff	01\13
CHECKED-REVIEWED	J. Waugh	T. Cote	01\13
DESIGN2-DETAILED2	-	-	-
DESIGN3-DETAILED3	-	-	-
REVISIONS 1	-	-	-
REVISIONS 2	-	-	-
REVISIONS 3	-	-	-
REVISIONS 4	-	-	-
FIELD CHANGES	-	-	-

SIGNATURE

P.E. NUMBER

DATE

SECOND OTTER BRIDGE
OTTER STREAM
MILFORD PENOBSCOT COUNTY

CROSS SECTIONS

SHEET NUMBER
8
OF 29

Sta. 27+25.00 to Sta. 27+50.00

Filename: 008_z_Xsect_27+75_001.dgn Division: BRIDGE Username: MCundiff Date:1/31/2013

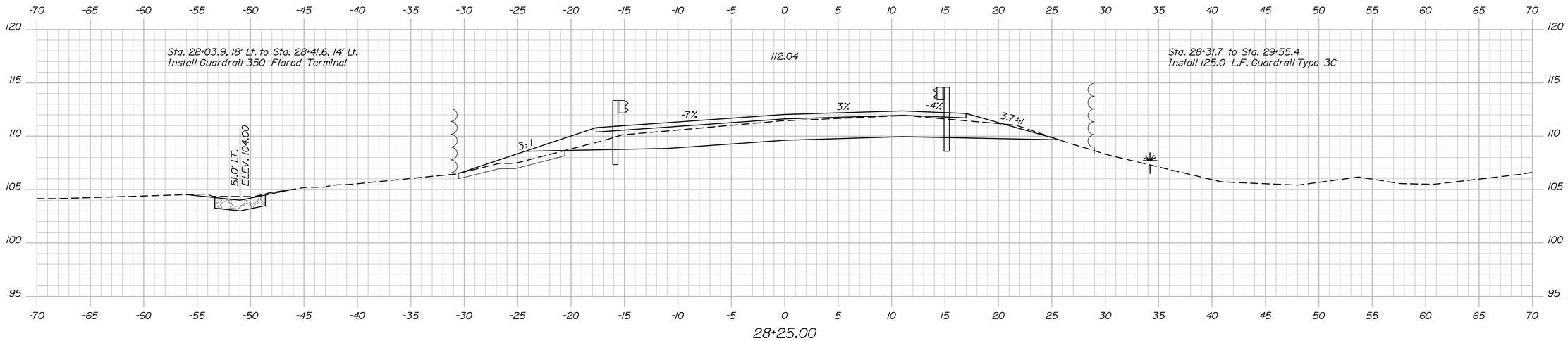

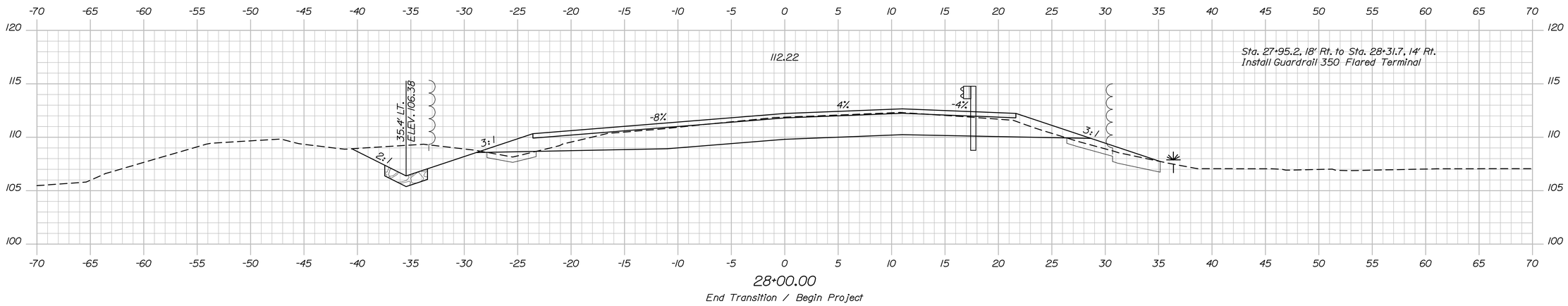

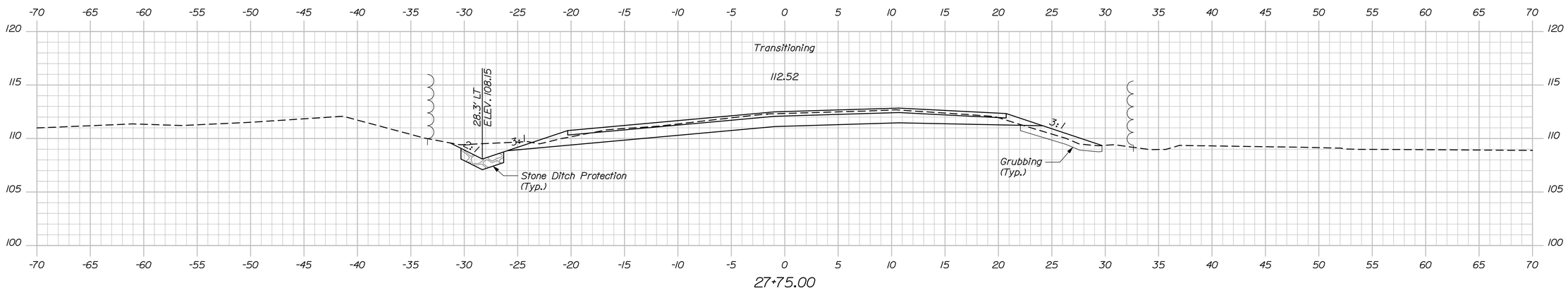

STATE OF MAINE
DEPARTMENT OF TRANSPORTATION

BR-1666(700)X

WIN 19423.00
$(PCF_BRIDGENUMBER)

BRIDGE PLANS

PROJ. MANAGER	S. Bodge	BY	DATE
DESIGN-DETAILED	A. Tower	M. Cundiff	01\13
CHECKED-REVIEWED	J. Waugh	T. Cote	01\13
DESIGN2-DETAILED2	-	-	-
DESIGN3-DETAILED3	-	-	-
REVISIONS 1	-	-	-
REVISIONS 2	-	-	-
REVISIONS 3	-	-	-
REVISIONS 4	-	-	-
FIELD CHANGES	-	-	-

SIGNATURE

P.E. NUMBER

DATE

SECOND OTTER BRIDGE
OTTER STREAM
MILFORD PENOBSCOT COUNTY

CROSS SECTIONS

SHEET NUMBER
9
OF 29

Sta. 27+75.00 to Sta. 28+25.00

Date:1/31/2013 Username: MCundiff Division: BRIDGE Filename: 009_z_Xsect_28+50_002.dgn

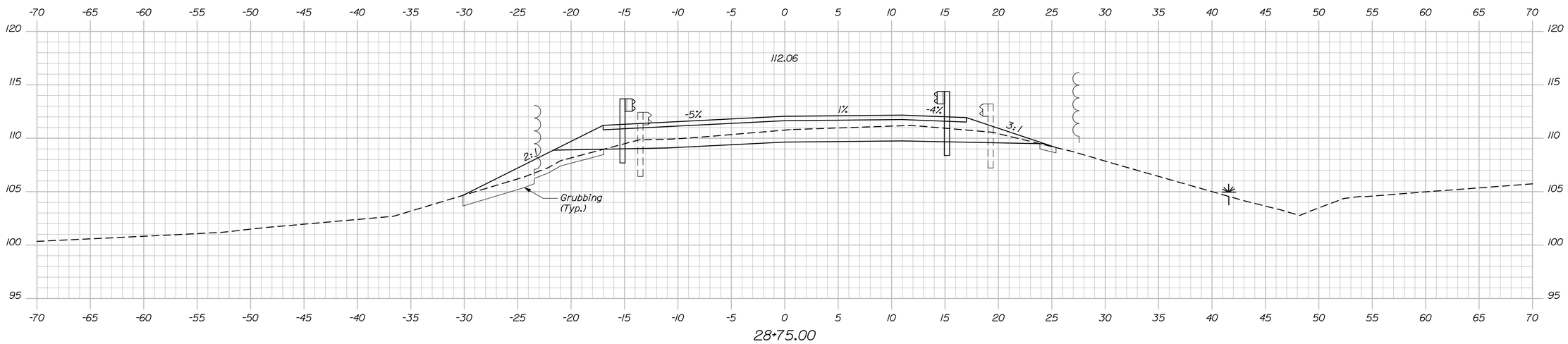

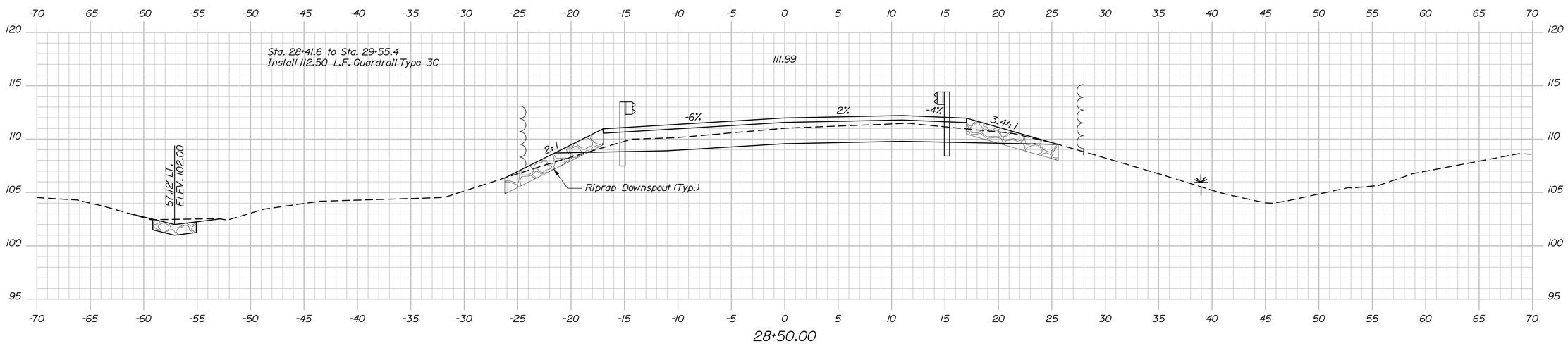

STATE OF MAINE
DEPARTMENT OF TRANSPORTATION

BR-1666(700)X

WIN 19423.00
$(PCF_BRIDGENUMBER)

BRIDGE PLANS

		BY	DATE
PROJ. MANAGER	S. Bodge		
DESIGN-DETAILED	A. Tower	M. Cundiff	01\13
CHECKED-REVIEWED	J. Waugh	T. Cote	01\13
DESIGN2-DETAILED2	-	-	-
DESIGN3-DETAILED3	-	-	-
REVISIONS 1	-	-	-
REVISIONS 2	-	-	-
REVISIONS 3	-	-	-
REVISIONS 4	-	-	-
FIELD CHANGES	-	-	-

SIGNATURE

P.E. NUMBER

DATE

SECOND OTTER BRIDGE
OTTER STREAM
MILFORD PENOBSCOT COUNTY

CROSS SECTIONS

SHEET NUMBER
10
OF 29

Sta. 28+50.00 to Sta. 28+75.00

Filename: 010_z_Xsect_29+00_003.dgn Division: BRIDGE Username: MCundiff Date:1/31/2013

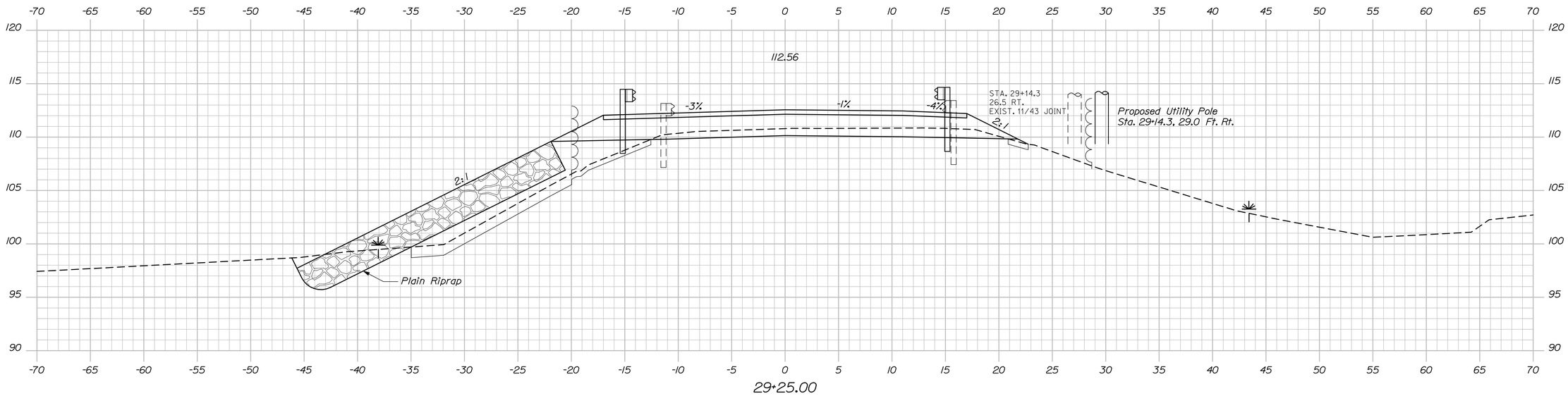

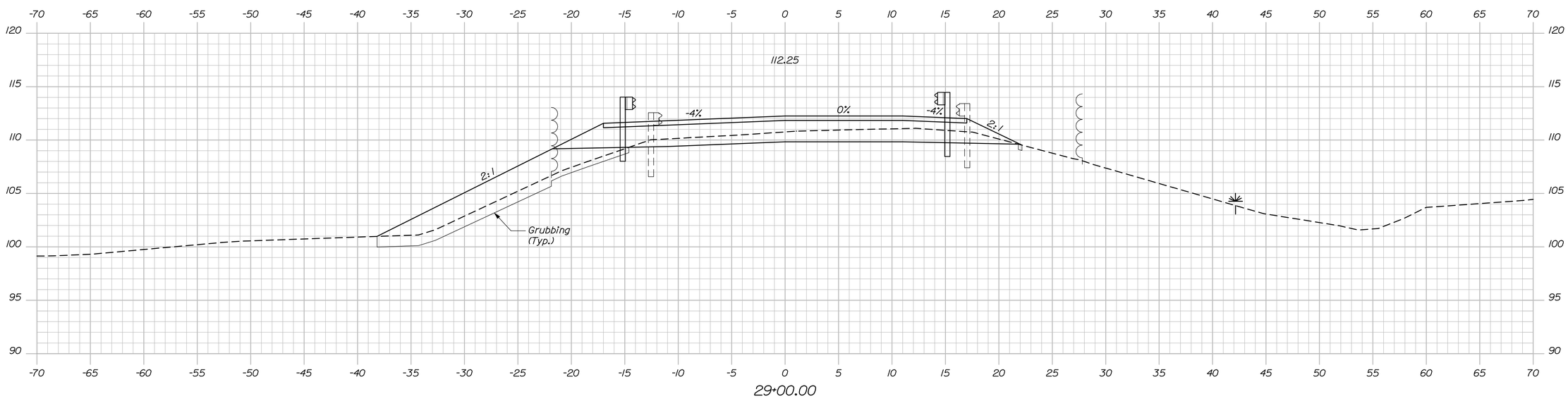

STATE OF MAINE
DEPARTMENT OF TRANSPORTATION

BR-1666(700)X

WIN 19423.00
$(PCF_BRIDGENUMBER)

BRIDGE PLANS

		BY	DATE
PROJ. MANAGER	S. Bodge		
DESIGN-DETAILED	A. Tower	M. Cundiff	01\13
CHECKED-REVIEWED	J. Waugh	T. Cote	01\13
DESIGN2-DETAILED2	-	-	-
DESIGN3-DETAILED3	-	-	-
REVISIONS 1	-	-	-
REVISIONS 2	-	-	-
REVISIONS 3	-	-	-
REVISIONS 4	-	-	-
FIELD CHANGES	-	-	-

SIGNATURE

P.E. NUMBER

DATE

SECOND OTTER BRIDGE
OTTER STREAM
MILFORD PENOBSCOT COUNTY

CROSS SECTIONS

SHEET NUMBER
11
OF 29

Sta. 29+00.00 to Sta. 29+25.00

Filename: 011_z_Xsect_29+50_004.dgn Division: BRIDGE Username: MCundiff Date:1/31/2013

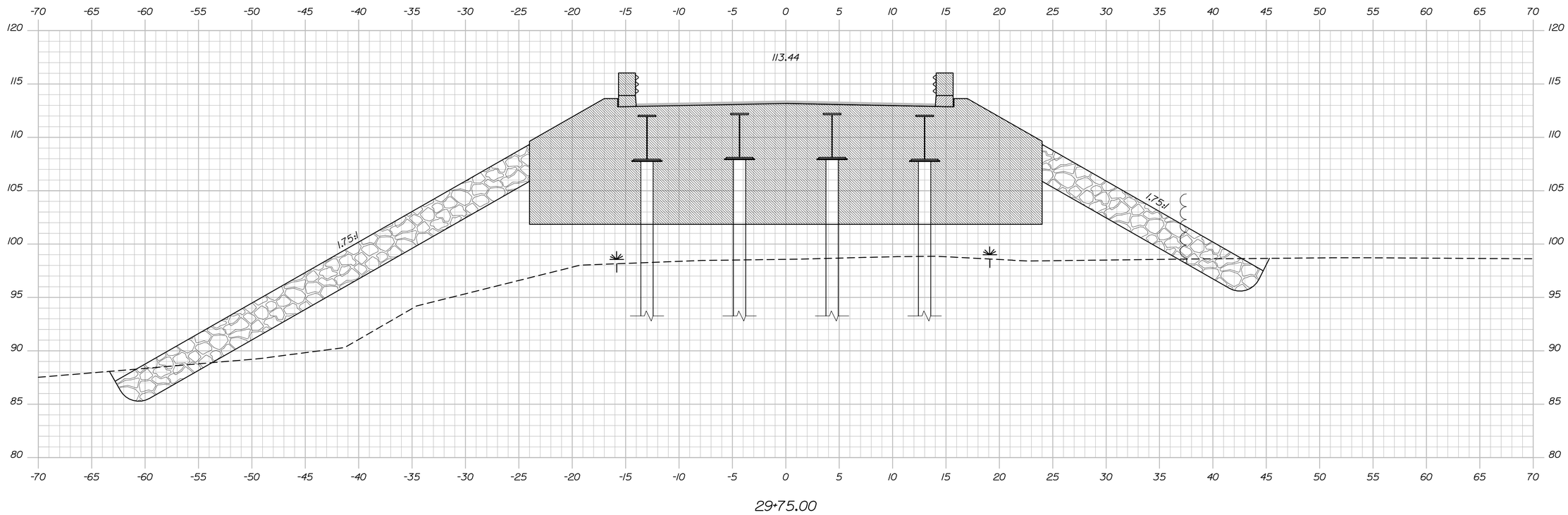

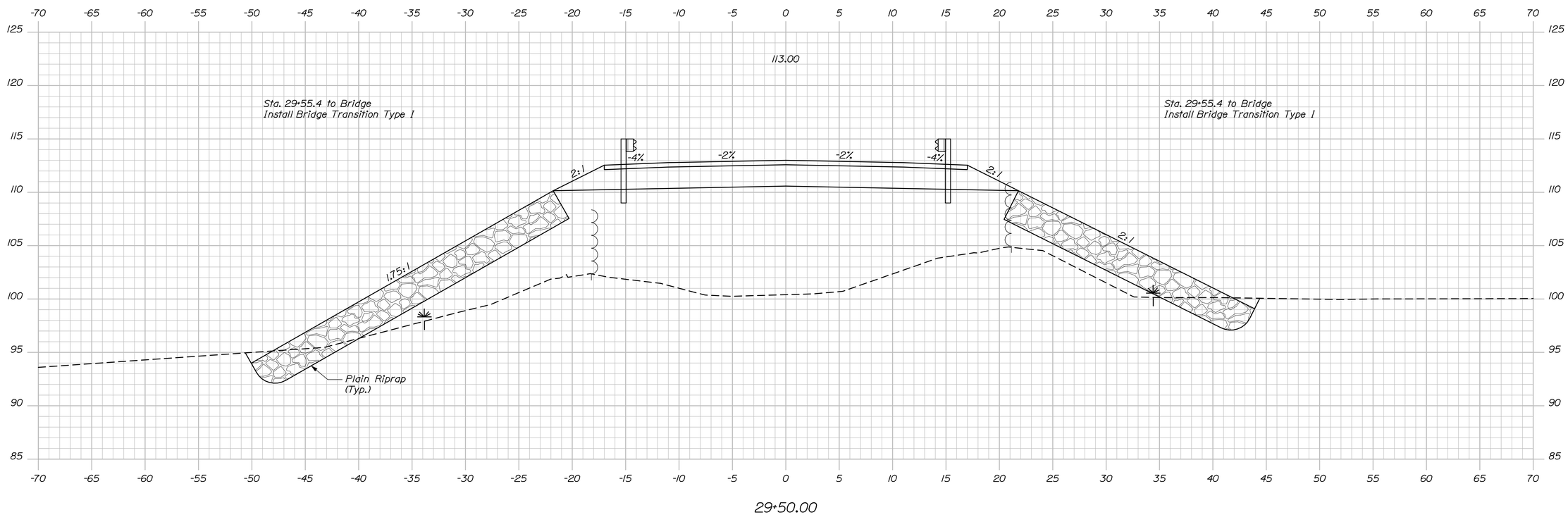

STATE OF MAINE
DEPARTMENT OF TRANSPORTATION

BR-1666(700)X

WIN 19423.00

$(PCF_BRIDGENUMBER)

BRIDGE PLANS

PROJ. MANAGER	S. Bodge	BY	DATE
DESIGN-DETAILED	A. Tower	M. Cundiff	01\13
CHECKED-REVIEWED	J. Waugh	T. Cote	01\13
DESIGN2-DETAILED2	-	-	-
DESIGN3-DETAILED3	-	-	-
REVISIONS 1	-	-	-
REVISIONS 2	-	-	-
REVISIONS 3	-	-	-
REVISIONS 4	-	-	-
FIELD CHANGES	-	-	-

SIGNATURE

P.E. NUMBER

DATE

SECOND OTTER BRIDGE
OTTER STREAM
MILFORD PENOBSCOT COUNTY

CROSS SECTIONS

SHEET NUMBER
12
OF 29

Sta. 29+50.00 to Sta. 29+75.00

Filename: 012_z_Xsect_31+25_005.dgn Division: BRIDGE Username: MCundiff Date:1/31/2013

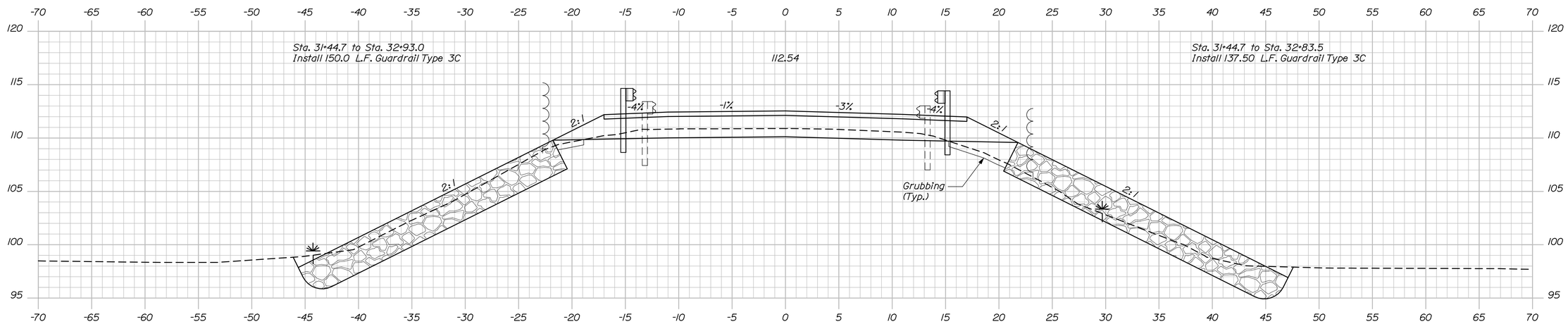

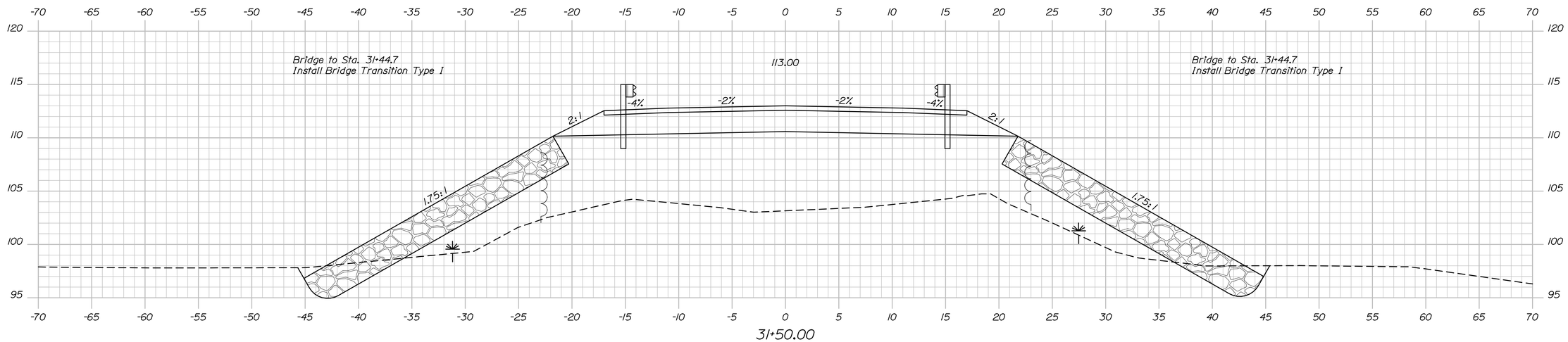

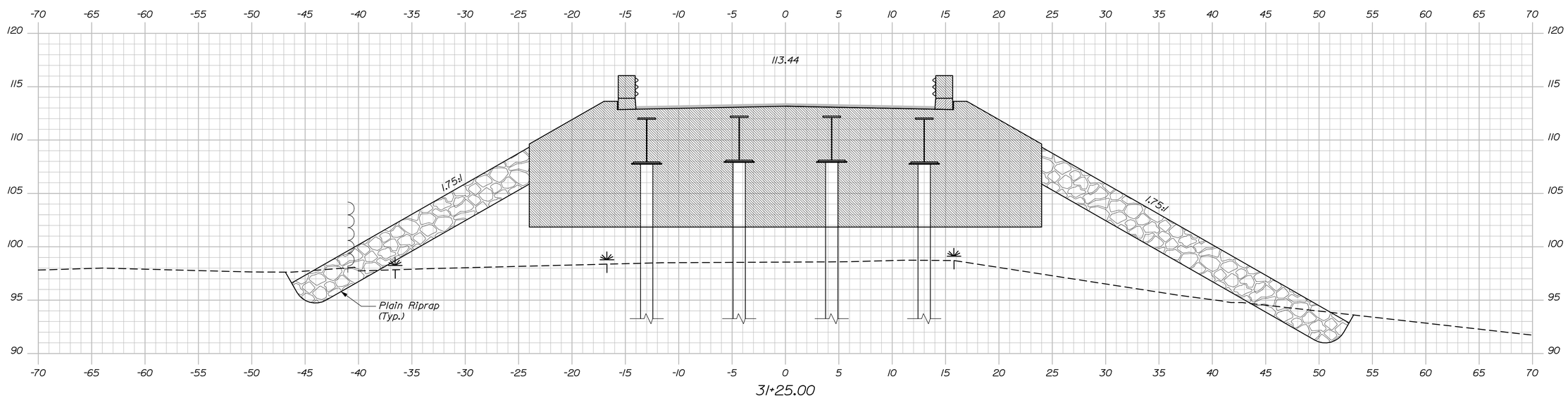

STATE OF MAINE
DEPARTMENT OF TRANSPORTATION

BR-1666(700)X

WIN 19423.00
$(PCF_BRIDGENUMBER)

BRIDGE PLANS

		BY	DATE
PROJ. MANAGER	S. Budge		
DESIGN-DETAILED	A. Tower	M. Cundiff	01\13
CHECKED-REVIEWED	J. Waugh	T. Cote	01\13
DESIGN2-DETAILED2	-	-	-
DESIGN3-DETAILED3	-	-	-
REVISIONS 1	-	-	-
REVISIONS 2	-	-	-
REVISIONS 3	-	-	-
REVISIONS 4	-	-	-
FIELD CHANGES	-	-	-

SIGNATURE

P.E. NUMBER

DATE

SECOND OTTER BRIDGE
OTTER STREAM
MILFORD PENOBSCOT COUNTY

CROSS SECTIONS

SHEET NUMBER
13
OF 29

Sta. 31+25.00 to Sta. 31+75.00

Filename: 013_z_Xsect_32+00_006.dgn Division: BRIDGE Username: MCundiff Date:1/31/2013

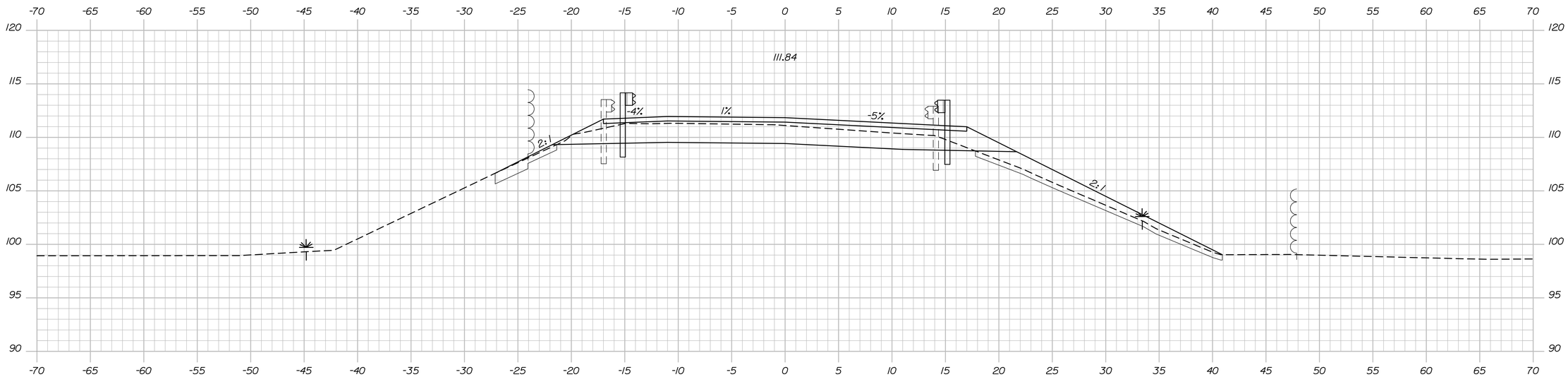

32+25.00

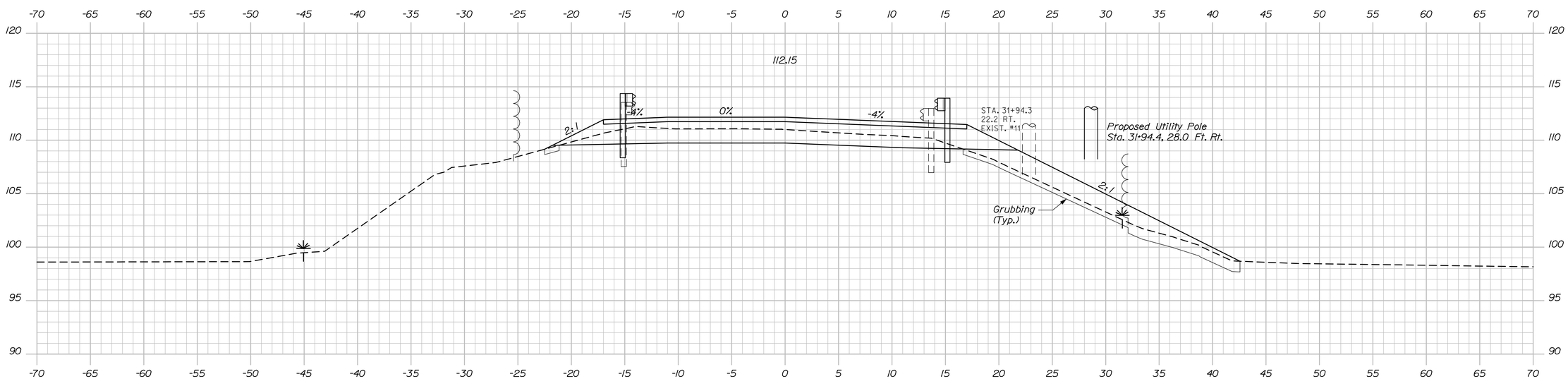

32+00.00

Sta. 32+00.00 to Sta. 32+25.00

STATE OF MAINE
DEPARTMENT OF TRANSPORTATION

BR-1666(700)X

WIN 19423.00
$(PCF_BRIDGENUMBER)

BRIDGE PLANS

		BY	DATE
PROJ. MANAGER	S. Bodge		
DESIGN-DETAILED	A. Tower	M. Cundiff	01\13
CHECKED-REVIEWED	J. Waugh	T. Cote	01\13
DESIGN2-DETAILED2	-	-	-
DESIGN3-DETAILED3	-	-	-
REVISIONS 1	-		-
REVISIONS 2	-		-
REVISIONS 3	-		-
REVISIONS 4	-		-
FIELD CHANGES	-		-

SIGNATURE

P.E. NUMBER

DATE

SECOND OTTER BRIDGE
OTTER STREAM
MILFORD PENOBSCOT COUNTY

CROSS SECTIONS

SHEET NUMBER
14
OF 29

Filename: 014_z_Xsect_32+50_007.dgn
Division: BRIDGE
Username: MCundiff
Date:1/31/2013

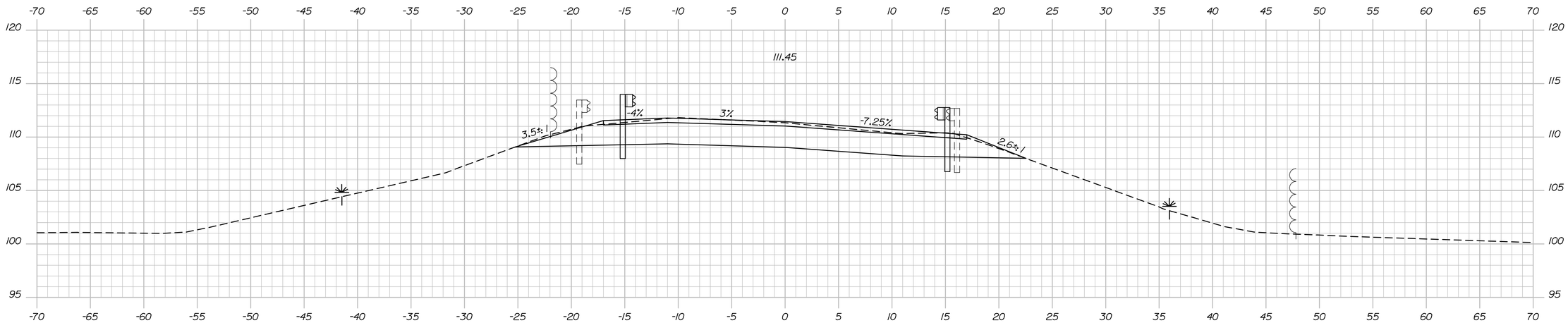

32+75.00

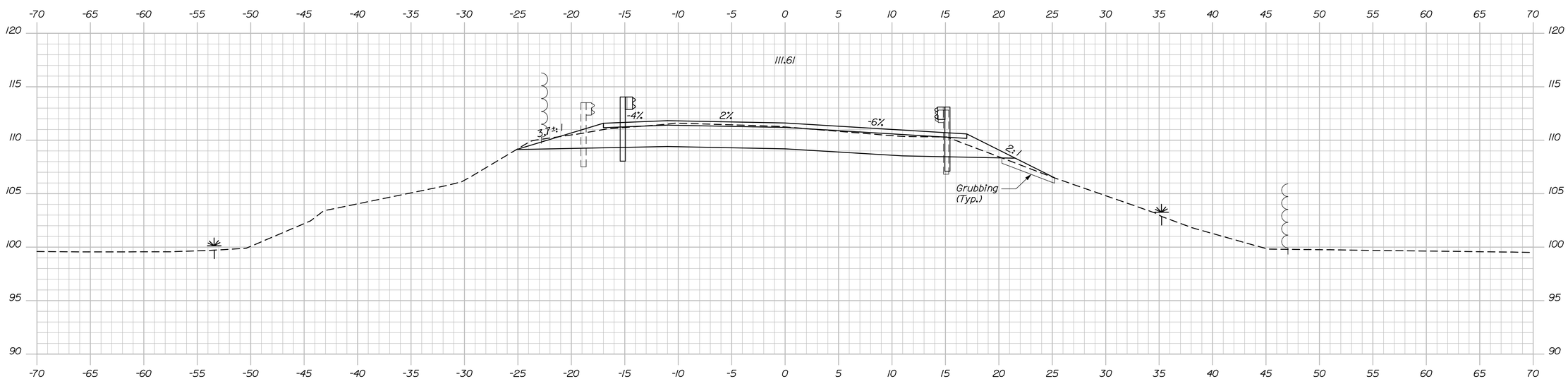

32+50.00

Sta. 32+50.00 to Sta. 32+75.00

STATE OF MAINE
DEPARTMENT OF TRANSPORTATION

BR-1666(700)X

WIN 19423.00
$(PCF_BRIDGENUMBER)

BRIDGE PLANS

PROJ. MANAGER	S. Bodge	BY	DATE
DESIGN-DETAILED	A. Tower	M. Cundiff	01\13
CHECKED-REVIEWED	J. Waugh	T. Cote	01\13
DESIGN2-DETAILED2	-	-	-
DESIGN3-DETAILED3	-	-	-
REVISIONS 1	-	-	-
REVISIONS 2	-	-	-
REVISIONS 3	-	-	-
REVISIONS 4	-	-	-
FIELD CHANGES	-	-	-

SIGNATURE

P.E. NUMBER

DATE

SECOND OTTER BRIDGE
OTTER STREAM
MILFORD PENOBSCOT COUNTY

CROSS SECTIONS

SHEET NUMBER
15
OF 29

Date:1/31/2013
Username: MCundiff
Division: BRIDGE
Filename: 015_z_Xsect_33+00_008.dgn

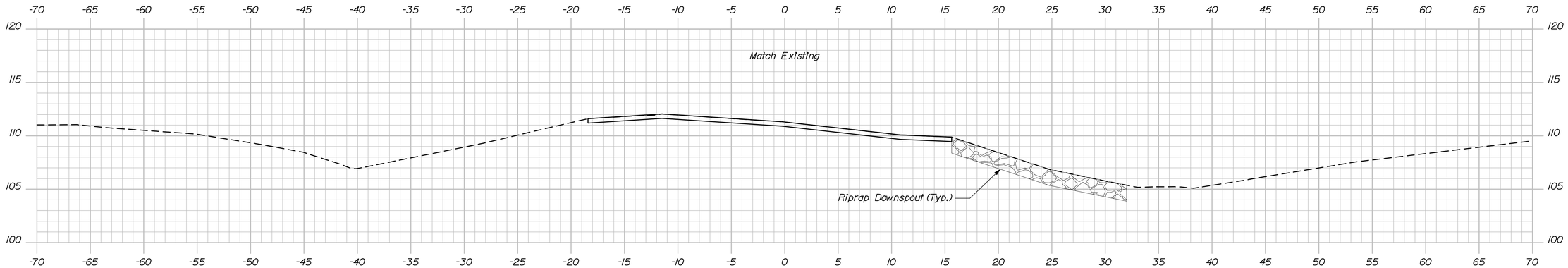

33+50.00
End Transition

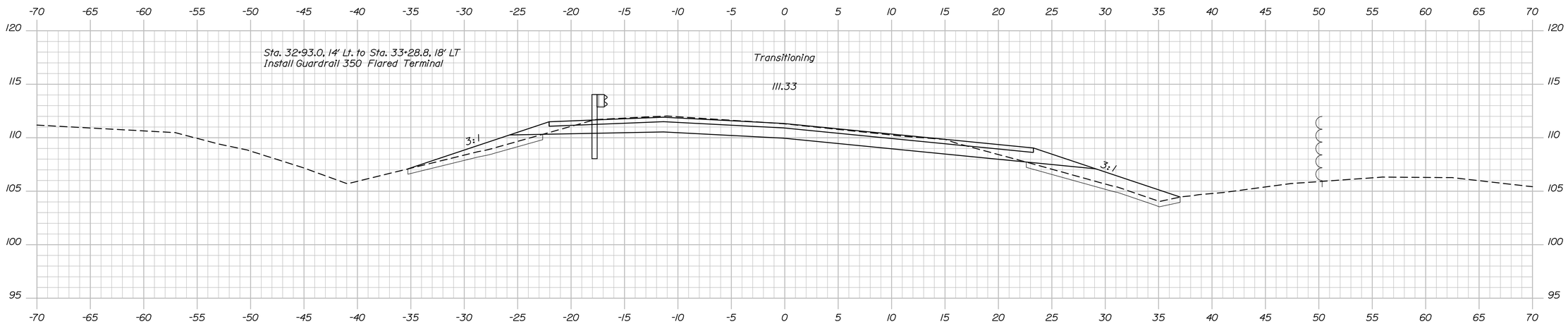

33+25.00

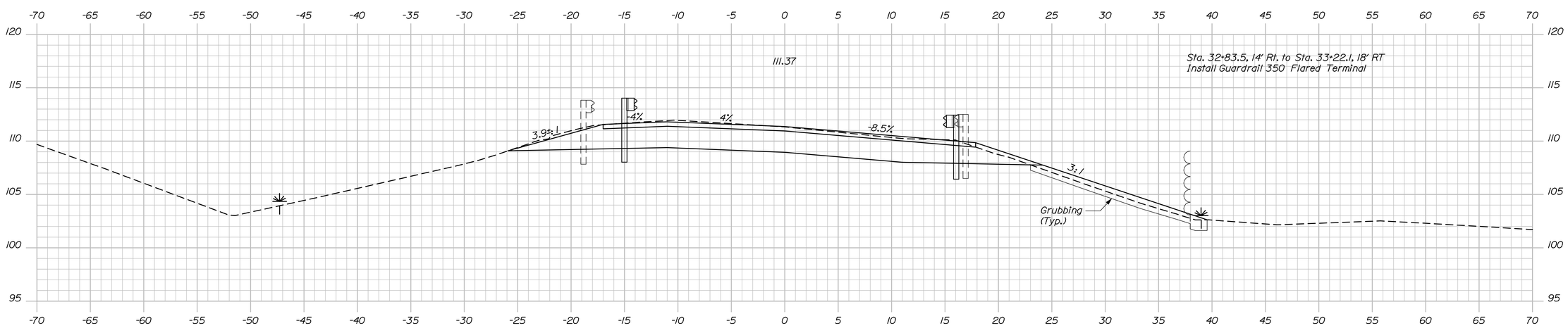

33+00.00
End Project / Begin Transition

STATE OF MAINE
DEPARTMENT OF TRANSPORTATION

BR-1666(700)X

WIN 19423.00
$(PCF_BRIDGENUMBER)

BRIDGE PLANS

		BY	DATE
PROJ. MANAGER	S. Bodge		
DESIGN-DETAILED	A. Tower	M. Cundiff	01\13
CHECKED-REVIEWED	J. Waugh	T. Cote	01\13
DESIGN2-DETAILED2	-	-	-
DESIGN3-DETAILED3	-	-	-
REVISIONS 1	-	-	-
REVISIONS 2	-	-	-
REVISIONS 3	-	-	-
REVISIONS 4	-	-	-
FIELD CHANGES	-	-	-

SIGNATURE

P.E. NUMBER

DATE

SECOND OTTER BRIDGE
OTTER STREAM
MILFORD PENOBSCOT COUNTY

CROSS SECTIONS

SHEET NUMBER
16
OF 29

Sta. 33+00.00 to Sta. 33+50.00

Filename: 016_z_Xsect_33+75_009.dgn Division: BRIDGE Username: MCundiff Date:1/31/2013

Filename: 017_z_Xsect_27+25_010.dgn Division: BRIDGE Username: MCundiff Date:1/31/2013

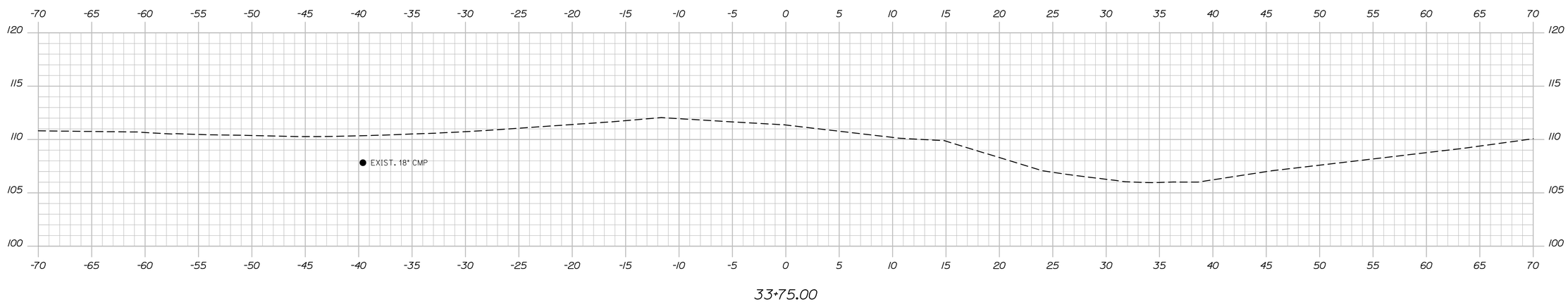

PROJ. MANAGER	S. Bodge	BY	DATE
DESIGN-DETAILED	A. Tower	M. Cundiff	01\13
CHECKED-REVIEWED	J. Waugh	T. Cote	01\13
DESIGN2-DETAILED2	-	-	-
DESIGN3-DETAILED3	-	-	-
REVISIONS 1	-	-	-
REVISIONS 2	-	-	-
REVISIONS 3	-	-	-
REVISIONS 4	-	-	-
FIELD CHANGES	-	-	-

SIGNATURE

P.E. NUMBER

DATE

STATE OF MAINE
DEPARTMENT OF TRANSPORTATION

BR-1666(700)X

WIN
$(PCF_BRIDGENUMBER) 19423.00

BRIDGE PLANS

SECOND OTTER BRIDGE
OTTER STREAM
MILFORD PENOBSCOT COUNTY

CROSS SECTIONS

SHEET NUMBER
17
OF 29

Sta. 33+75.00 to Sta. 33+75.00

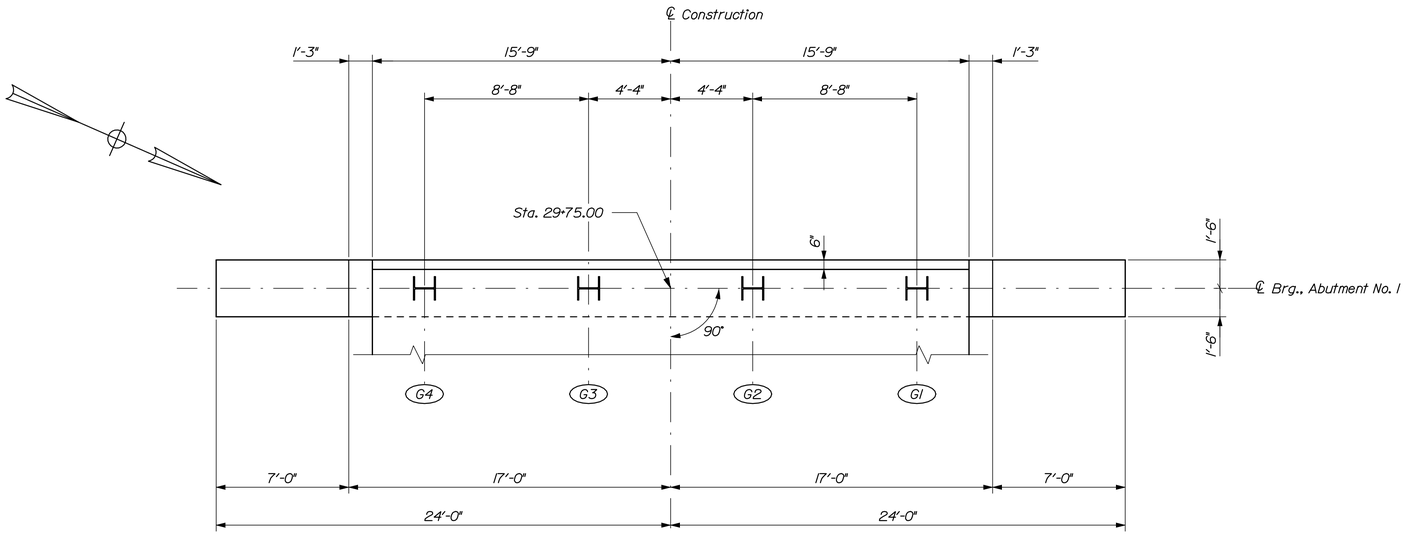

ABUTMENT NO. 1 PLAN

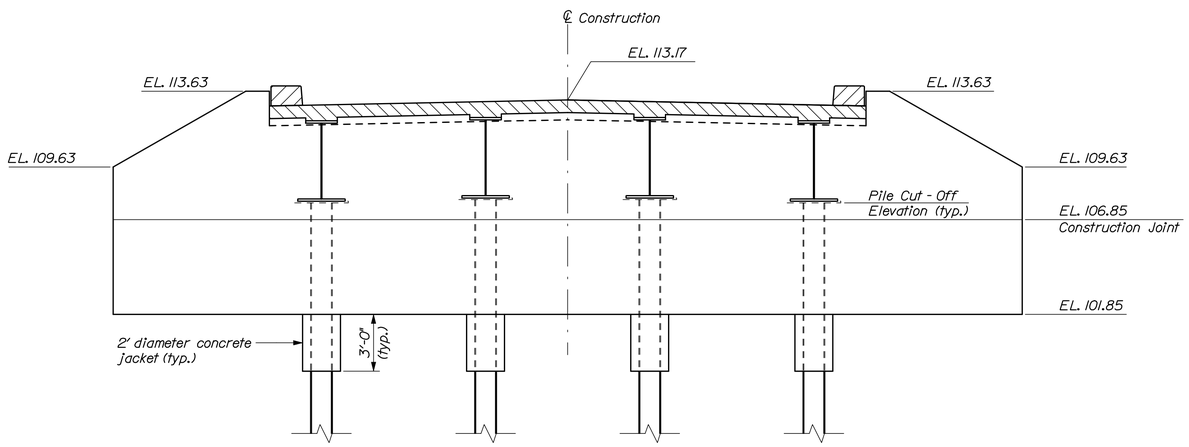

ABUTMENT NO. 1 ELEVATION

ABUTMENT NOTES:

1. Reinforcing steel shall have a minimum concrete cover of 2 inches unless otherwise noted.

2. All elevations are provided at centerline of bearing unless otherwise noted.

3. Cover joints where waterstops are not required in accordance with Standard Detail 502(01).

4. Place 4 inch diameter drains in breastwall and wingwalls at 8 feet maximum spacing. The exact location will be determined by the Resident.

5. Construct French Drains behind the abutments and wingwalls in accordance with Standard Specification Section 512, French Drains.

6. Abutments, wingwalls, and their footings shall be backfilled with Granular Borrow for Underwater Backfill. Pay limits will be the structural excavation limits in cut areas and a vertical plane located 10 feet behind the walls in fill areas.

7. The Contractor shall install Transition Barrier vertical closed stirrups as shown in Standard Details Section 526, prior to the placement of the curb concrete.

8. No backfilling around the front or rear face of the abutment will be allowed until the bridge deck has been placed and cured. Backfilling prior to deck placement may lead to unacceptible variations in girder camber.

9. Payment for concrete jacket around the tops of the H-piles will not be paid for directly. Payment shall be incidental to Pay Item 502.219 Structural Concrete Abutment and Retaining Walls. Fill concrete shall be used for the concrete jackets.

PILE NOTES:

1. The maximum factored pile load is 508 kips.

2. H-pile material shall be ASTM A 572, Grade 50.

3. Estimate of piles required:

   Abutment No. 1: 4 ~ HP 14x117 @ 50 feet
   Abutment No. 2: 4 ~ HP 14x117 @ 57 feet

4. All piles shall be equipped with a pile tip in accordance with Standard Specifications Section 501.10, Prefabricated Pile Tips.

5. Piles shall be driven to bedrock.

6. Piles shall not be out of position shown by more than 2 inches in any direction.

7. The Contractor shall perform and submit a wave equation analysis for review and acceptance by the Resident. The maximum allowable driving stress is 0.90 times Fy. The submittal analyses shall include the proposed stopping criteria based on the wave equation analysis and the proposed driving system. The stopping criteria shall include the blows per inch and the number of 1-in. intervals at which pile installation may be terminated. The cost of performing the wave equation analysis will be considered incidental to Item No. 501.92, Pile Driving Equipment Mobilization.

8. The Contractor shall perform 2 dynamic load test(s), one at each abutment, to confirm the ultimate capacity of the piles. The required nominal resistance for the pile is the factored axial pile load divided by a resistance factor of 0.65 per LRFD Specifications. The dynamic test shall be performed on the first production pile driven at each abutment.

9. The sole plates and installation of the sole plate at the top of the H-piles shall not be paid for directly. Payment shall be incidental to Pay Item No. 501.541, Steel H-beam Pile 117 lbs/ft., In Place.

ABUTMENT NO. 1
PILE CUT-OFF
ELEVATIONS

Pile	Elevation
G1	107.74
G2	107.91
G3	107.91
G4	107.74

HNTB

STATE OF MAINE
DEPARTMENT OF TRANSPORTATION

BR-1666(700)X

WIN 16667.00

BRIDGE NO. 2754

BRIDGE PLANS

		BY	DATE
PROJ. MANAGER	S. Bridge		
DESIGN-DETAILED	A. Tower	M. Cundiff	01\13
CHECKED-REVIEWED	J. Waugh	T. Cote	01\13
DESIGN2-DETAILED2	-	-	-
DESIGN3-DETAILED3	-	-	-
REVISIONS 1	-	-	-
REVISIONS 2	-	-	-
REVISIONS 3	-	-	-
REVISIONS 4	-	-	-
FIELD CHANGES	-	-	-

SIGNATURE

P.E. NUMBER

DATE

SECOND OTTER BRIDGE
OTTER STREAM
MILFORD PENOBSCOT COUNTY

ABUTMENT NO. 1

SHEET NUMBER

18

OF 29

Filename: 018_Abutment_No. 1.dgn Division: BRIDGE Username: MCundiff Date:1/31/2013

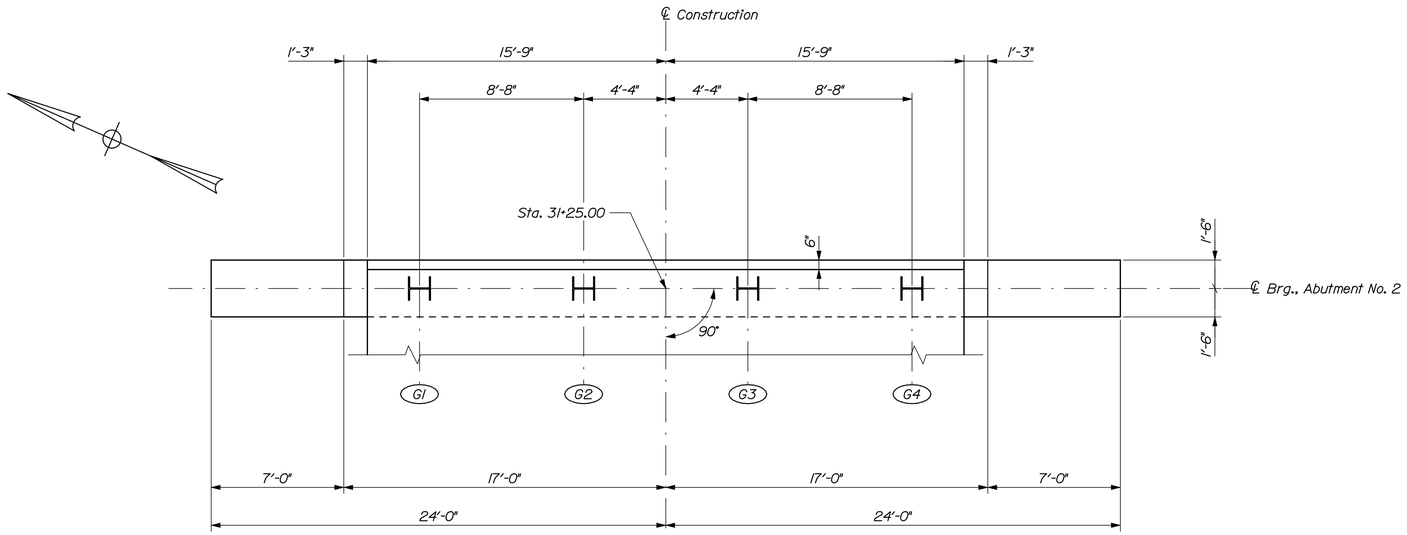

ABUTMENT NO. 2 PLAN

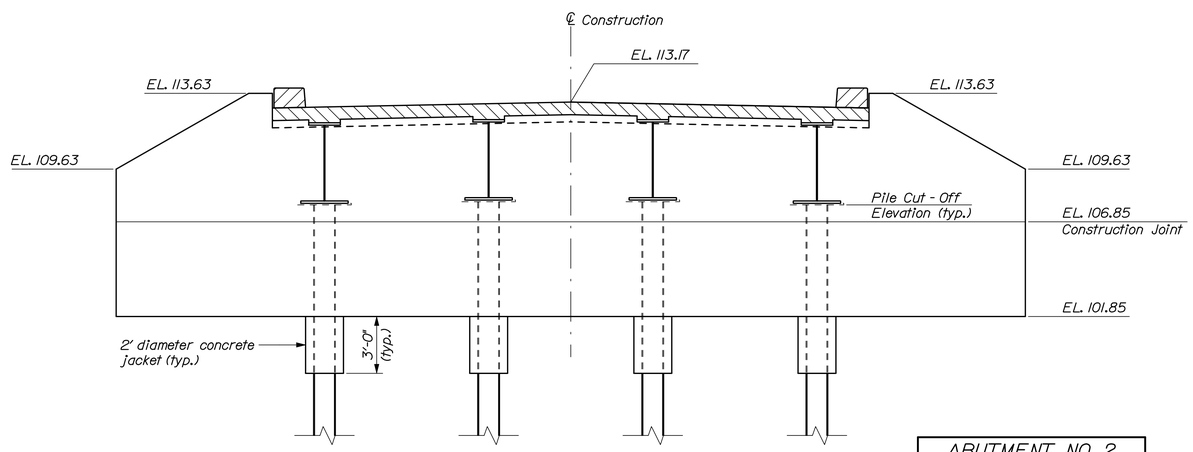

ABUTMENT NO. 2 ELEVATION

ABUTMENT NO. 2 PILE CUT-OFF ELEVATIONS	
Pile	Elevation
G1	107.74
G2	107.91
G3	107.91
G4	107.74

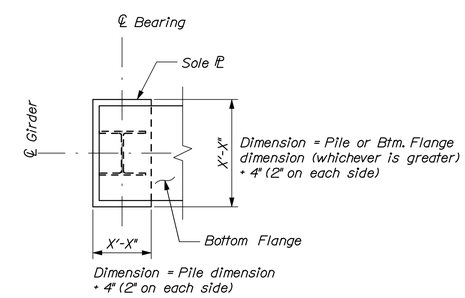

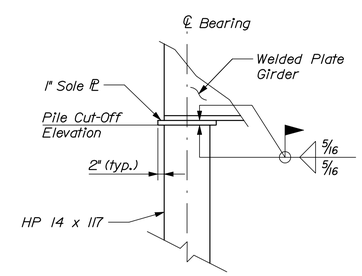

PILE CUT-OFF DETAIL

Pile cut-off elevation shall be located at center of the pile.
Cut the pile at a slope to match the profile grade.

HNTB

STATE OF MAINE
DEPARTMENT OF TRANSPORTATION

BR-1666(700)X

WIN 16667.00

BRIDGE NO. 2754

BRIDGE PLANS

PROJ. MANAGER	S. Bridge	BY	DATE
DESIGN-DETAILED	A. Tower	M. Cundiff	01\13
CHECKED-REVIEWED	J. Waugh	T. Cote	01\13
DESIGN2-DETAILED2	-	-	-
DESIGN3-DETAILED3	-	-	-
REVISIONS 1	-	-	-
REVISIONS 2	-	-	-
REVISIONS 3	-	-	-
REVISIONS 4	-	-	-
FIELD CHANGES	-	-	-

SIGNATURE

P.E. NUMBER

DATE

SECOND OTTER BRIDGE
OTTER STREAM
MILFORD PENOBSCOT COUNTY

ABUTMENT NO. 2

SHEET NUMBER

19

OF 29

Filename: 019_Abutment_No. 2.dgn Division: BRIDGE Username: MCundiff Date:1/31/2013

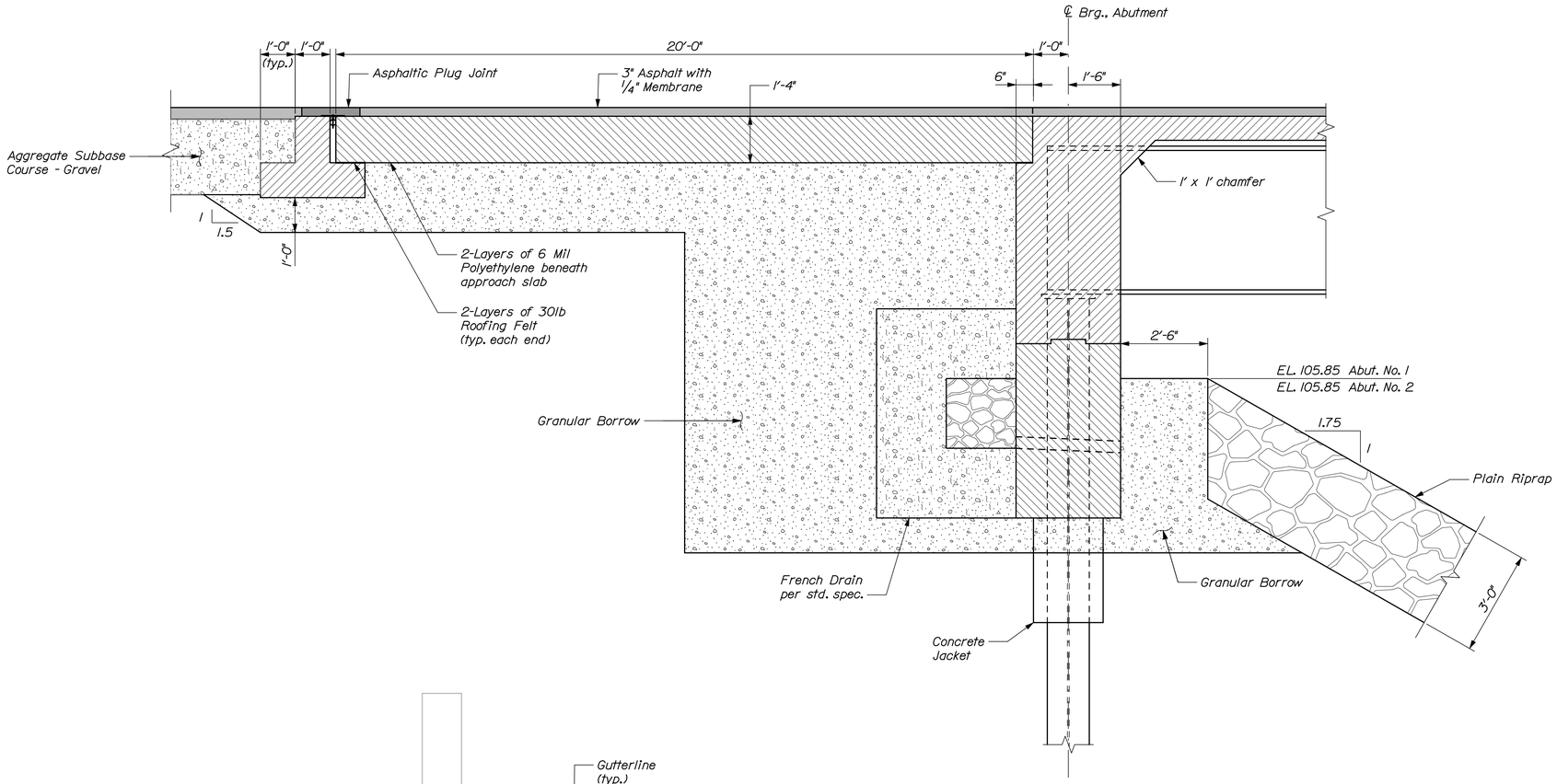

ABUTMENT BACKFILL DETAIL

NOTES:

1. Asphaltic plug joint materials shall meet the requirements of the project specifications and shall be installed in accordance with the manufacturer's recommendations.

2. Asphaltic plug joints shall be installed after the second lift of pavement is installed.

3. The joint area shall be cleaned in accordance with the manufacturer's recommendations.

4. The heat resistant backer rod shall be placed in the movement gap allowing for 1/2" ± of binder above the rod.

5. 16D galvanized centering nails shall be spaced at 12" o.c. maximum and placed 2" from joints in the bearing plate.

6. Payment for concrete used in constructing the sleeper slabs shall be paid under Item No. 502.31, Structural Concrete, Approach Slabs.

7. Saw cut in pavement shall be sealed with emulsified asphalt sealing compound conforming to Specification 702.12.

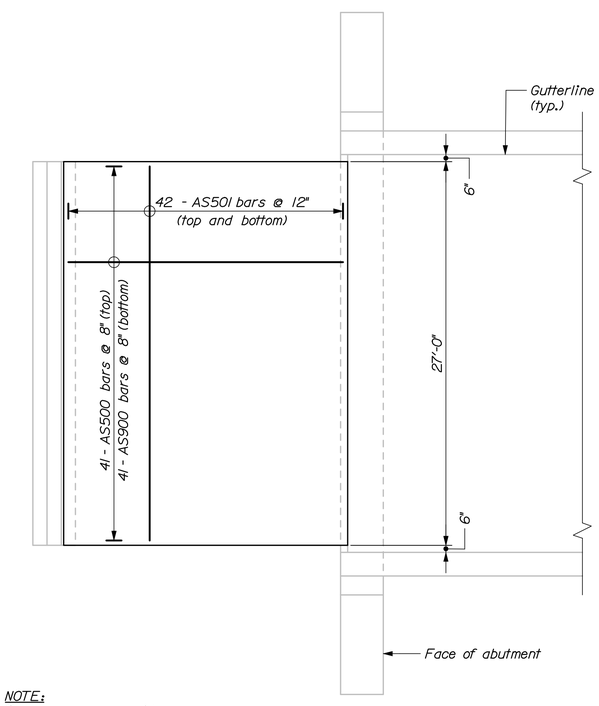

NOTE:
Sleeper slab and bridge reinforcement not shown for clarity.

APPROACH SLAB PLAN

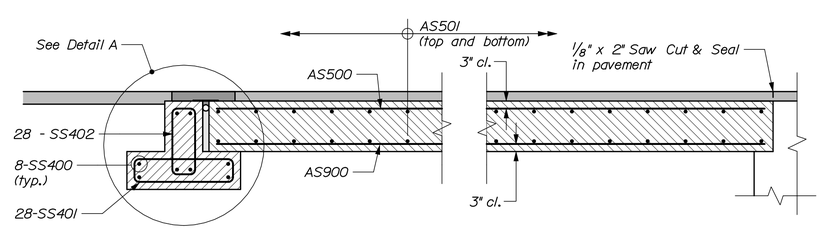

APPROACH SLAB SECTION

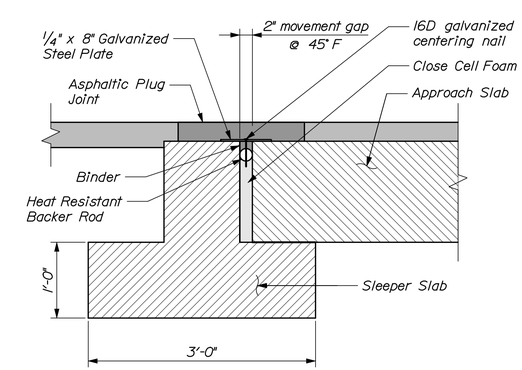

DETAIL A

STATE OF MAINE
DEPARTMENT OF TRANSPORTATION

BR-1666(700)X

WIN 16667.00

BRIDGE NO. 2754

BRIDGE PLANS

	BY	DATE
PROJ. MANAGER	S. Bodge	
DESIGN-DETAILED	M. Cundiff	01\13
CHECKED-REVIEWED	A. Tower	01\13
DESIGN2-DETAILED2	J. Waugh	01\13
DESIGN3-DETAILED3	T. Cote	-
REVISIONS 1	-	-
REVISIONS 2	-	-
REVISIONS 3	-	-
REVISIONS 4	-	-
FIELD CHANGES	-	-

SIGNATURE

P.E. NUMBER

DATE

SECOND OTTER BRIDGE
OTTER STREAM
MILFORD PENOBSCOT COUNTY

ABUTMENT DETAILS

SHEET NUMBER
20
OF 29

HNTB

Filename: 020_Abutment_Details.dgn Division: BRIDGE Username: MCundiff Date:1/31/2013

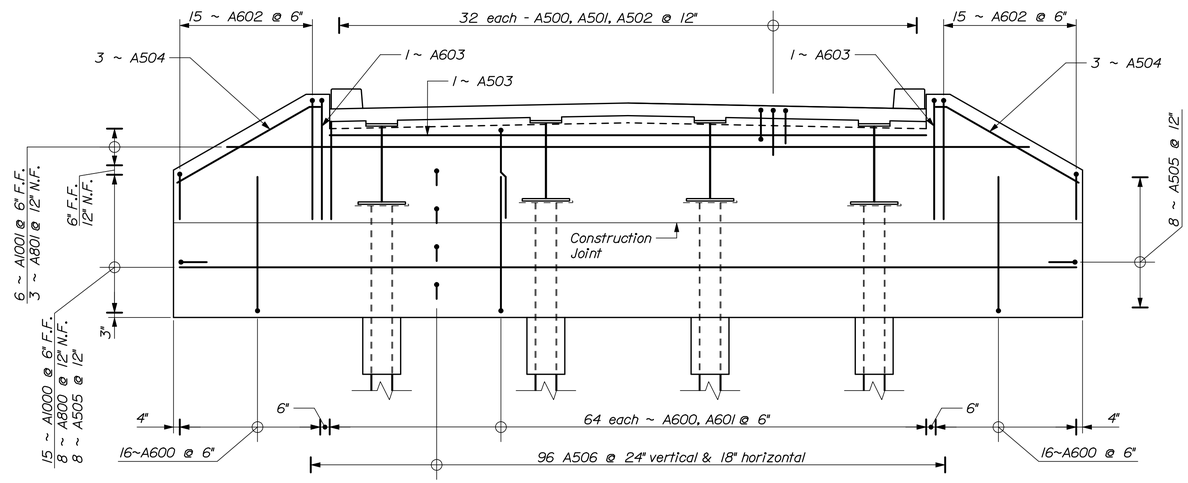

ABUTMENT NO. 1 REINFORCING

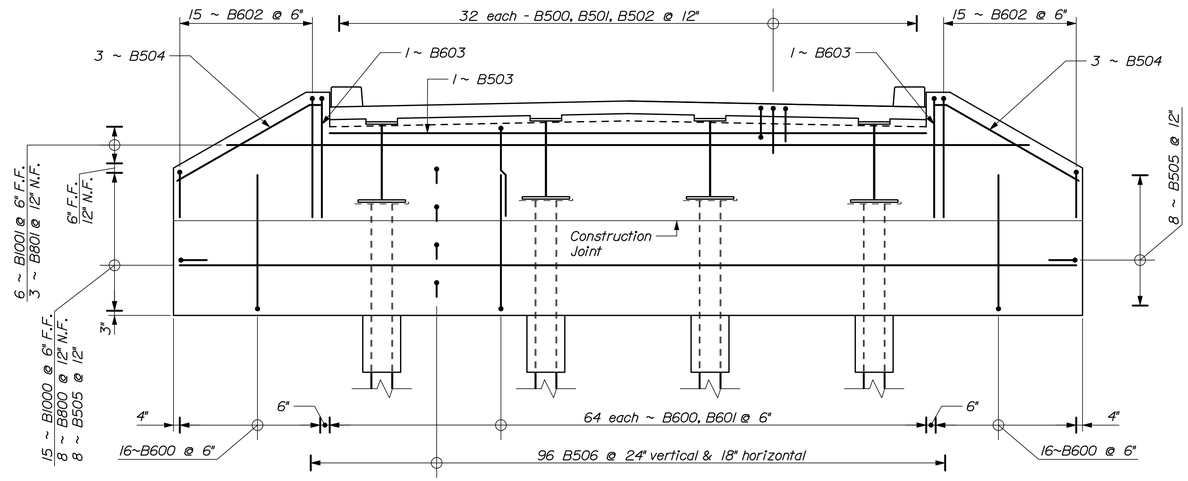

ABUTMENT NO. 2 REINFORCING

STATE OF MAINE
DEPARTMENT OF TRANSPORTATION

BR-1666(700)X

WIN 16667.00

BRIDGE NO. 2754

BRIDGE PLANS

PROJ. MANAGER	S. Bodge	BY	DATE
DESIGN-DETAILED	A. Tower	M. Cundiff	01\13
CHECKED-REVIEWED	J. Waugh	T. Cote	01\13
DESIGN2-DETAILED2	-	-	-
DESIGN3-DETAILED3	-	-	-
REVISIONS 1	-	-	-
REVISIONS 2	-	-	-
REVISIONS 3	-	-	-
REVISIONS 4	-	-	-
FIELD CHANGES	-	-	-

SIGNATURE

P.E. NUMBER

DATE

SECOND OTTER BRIDGE
OTTER STREAM
MILFORD PENOBSCOT COUNTY

ABUTMENT REINFORCING

SHEET NUMBER

21

OF 29

HNTB

Filename: 021_Abutment_Reinforcing.dgn Division: BRIDGE Username: mcundiff Date:2/1/2013

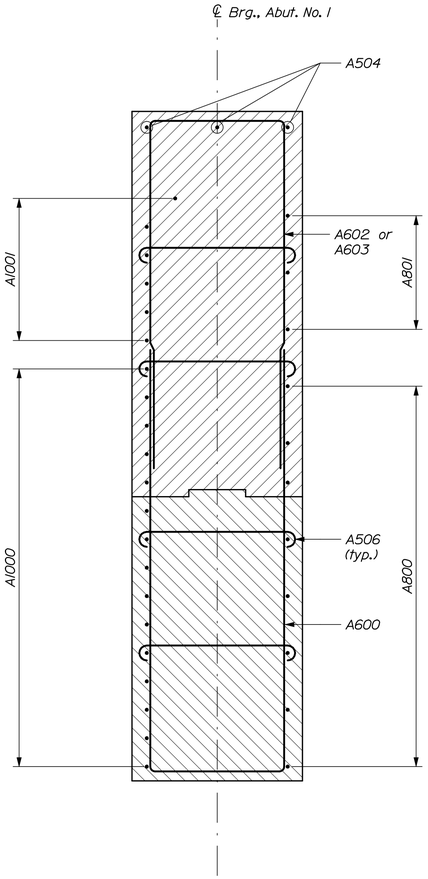

ABUTMENT NO. 1 WINGWALL SECTION

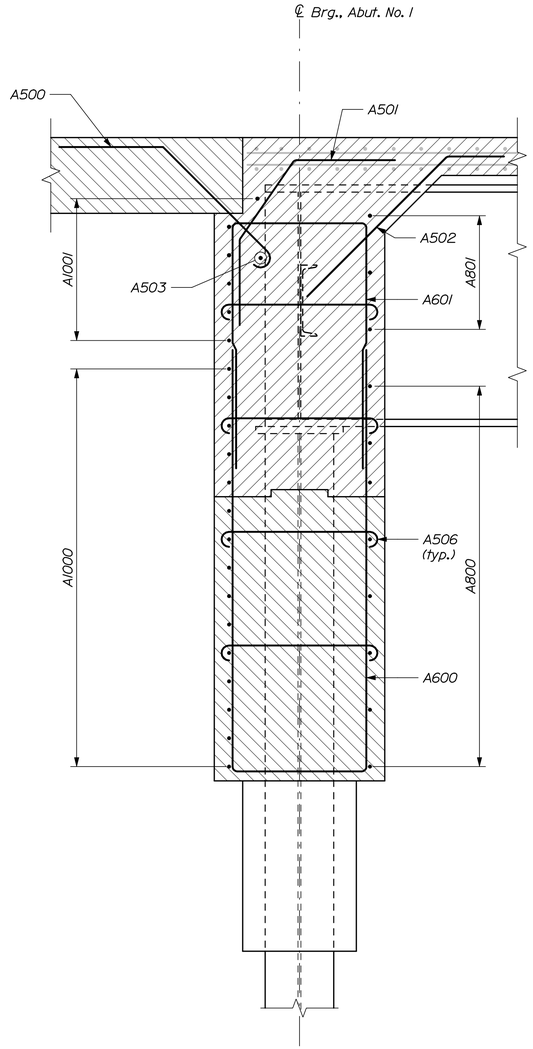

ABUTMENT NO. 1 SECTION

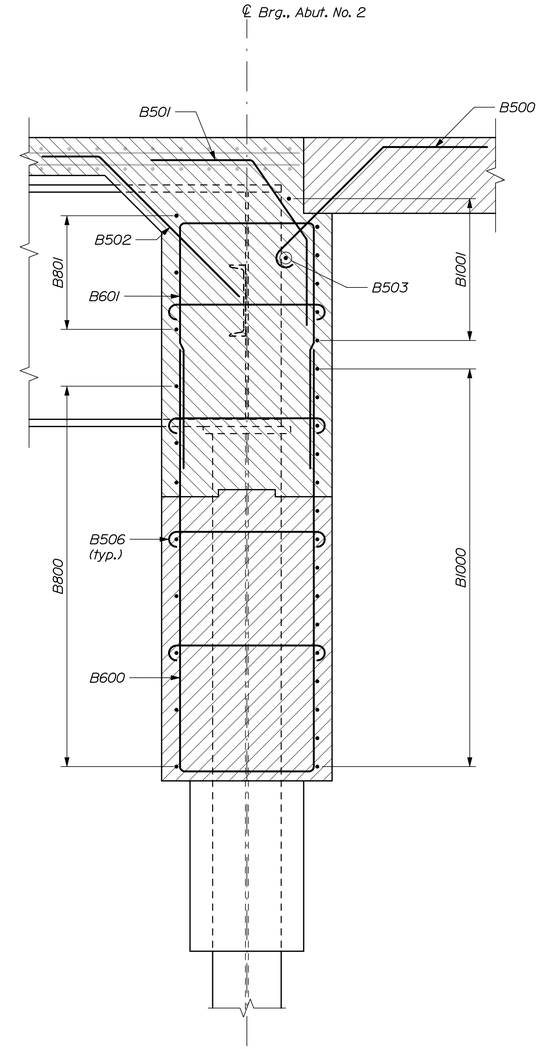

ABUTMENT NO. 2 SECTION

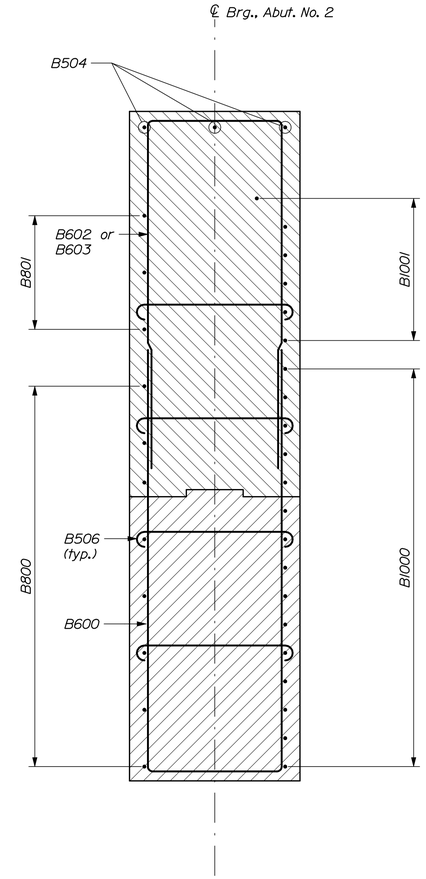

ABUTMENT NO. 2 WINGWALL SECTION

NOTES:
1. Deck reinforcing shown screened for clarity.

2. Where A506 or B506 do not intersect horizontal reinforcing, hook bar around vertical reinforcing.

HNTB

STATE OF MAINE
DEPARTMENT OF TRANSPORTATION

BR-1666(700)X

WIN 16667.00

BRIDGE NO. 2754

BRIDGE PLANS

PROJ. MANAGER	S. Bodgel	BY	DATE
DESIGN-DETAILED	A. Tower	M. Cundiff	01\13
CHECKED-REVIEWED	J. Waugh	T. Cote	01\13
DESIGN2-DETAILED2	-	-	-
DESIGN3-DETAILED3	-	-	-
REVISIONS 1	-	-	-
REVISIONS 2	-	-	-
REVISIONS 3	-	-	-
REVISIONS 4	-	-	-
FIELD CHANGES	-	-	-

SIGNATURE

P.E. NUMBER

DATE

SECOND OTTER BRIDGE
OTTER STREAM
MILFORD PENOBSCOT COUNTY

ABUTMENT SECTIONS

SHEET NUMBER
22
OF 29

Filename: 022_Abutment_Sections.dgn Division: BRIDGE Username: mcundiff Date:2/1/2013

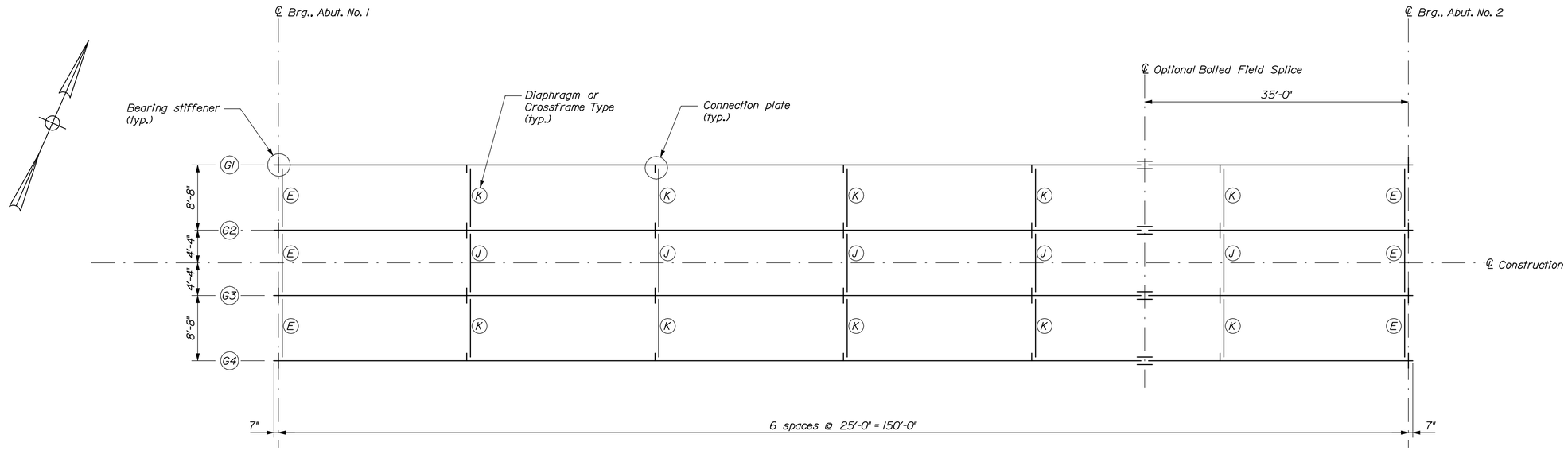

FRAMING PLAN

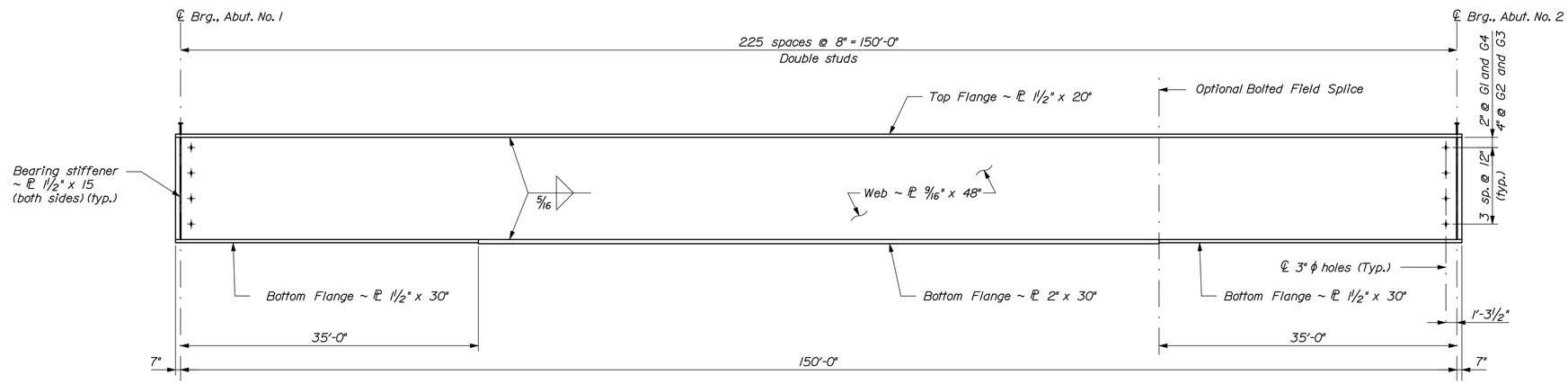

GIRDER ELEVATION

452 studs per girder (1808 studs total)

GIRDER	BOTTOM OF SLAB ELEVATIONS										
	℄ Brg., Abut. No. 1	0.1 x L	0.2 x L	0.3 x L	0.4 x L	0.5 x L	0.6 x L	0.7 x L	0.8 x L	0.9 x L	℄ Brg., Abut. No. 2
Exterior	112.24	112.64	112.98	113.22	113.38	113.43	113.38	113.22	112.98	112.64	112.24
Interior	112.41	112.85	113.20	113.47	113.64	113.69	113.64	113.47	113.20	112.85	112.41

HNTB

STATE OF MAINE
DEPARTMENT OF TRANSPORTATION

BR-1666(700)X

WIN 16667.00

BRIDGE NO. 2754

BRIDGE PLANS

		BY	DATE
PROJ. MANAGER	S. Bridge		
DESIGN-DETAILED	J. Waugh	M. Cundiff	01\13
CHECKED-REVIEWED	A. Tower	T. Cote	01\13
DESIGN2-DETAILED2	-	-	-
DESIGN3-DETAILED3	-	-	-
REVISIONS 1	-	-	-
REVISIONS 2	-	-	-
REVISIONS 3	-	-	-
REVISIONS 4	-	-	-
FIELD CHANGES	-	-	-

SIGNATURE

P.E. NUMBER

DATE

SECOND OTTER BRIDGE
OTTER STREAM
MILFORD PENOBSCOT COUNTY

FRAMING PLAN

SHEET NUMBER

23

OF 29

Filename: 023_FramingPlan.dgn Division: BRIDGE Username: MCundiff Date:1/31/2013

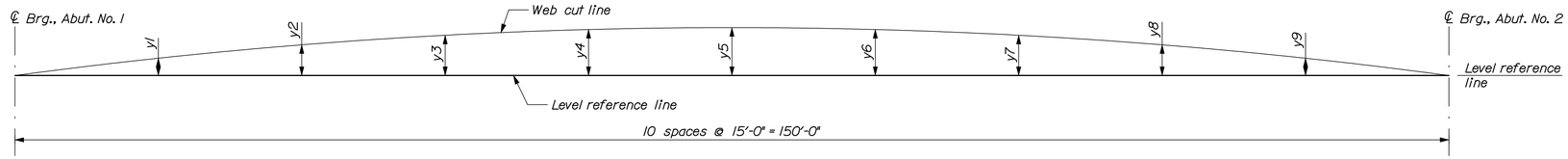

CAMBER DIAGRAM

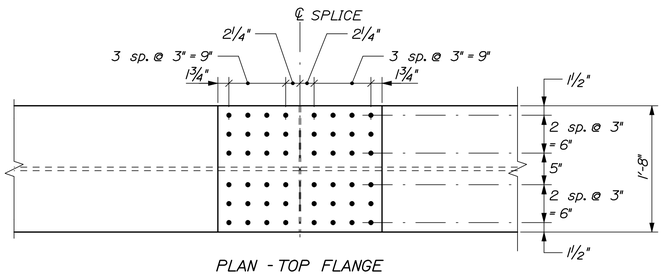

PLAN - TOP FLANGE

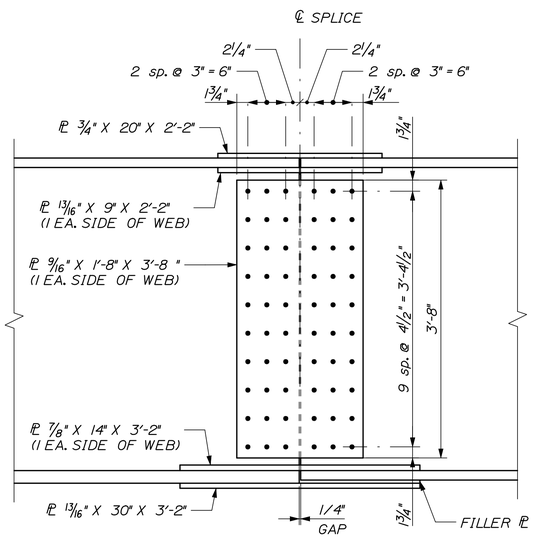

ELEVATION

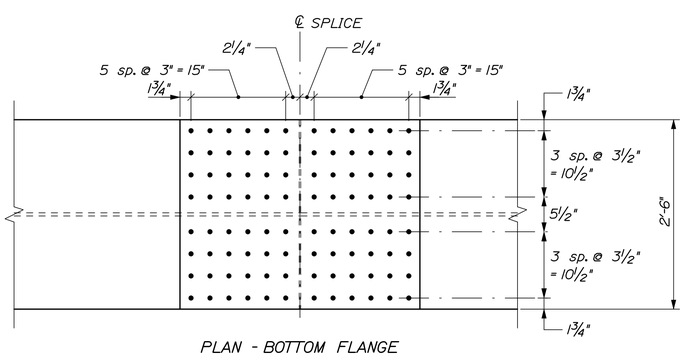

PLAN - BOTTOM FLANGE

OPTIONAL BOLTED FIELD SPLICE

GIRDER	CAMBER ORDINATES (INCHES)										
	℄ Brg., Abut. No. 1	y1	y2	y3	y4	y5	y6	y7	y8	y9	℄ Brg., Abut. No. 2
Exterior	0	5 13/16	10 5/8	14 1/4	16 1/2	17 1/4	16 1/2	14 1/4	10 5/8	5 13/16	0
Interior	0	6 1/8	11 5/16	15 3/16	17 9/16	18 3/8	17 9/16	15 3/16	11 5/16	6 1/8	0

GIRDER	DEAD LOAD COMPONENT	DEAD LOAD DEFLECTIONS (INCHES)										
		℄ Brg., Abut. No. 1	y1	y2	y3	y4	y5	y6	y7	y8	y9	℄ Brg., Abut. No. 2
Exterior	Steel Dead Load	0	-0.95	-1.80	-2.44	-2.86	-2.99	-2.86	-2.44	-1.80	-0.95	0
	Deck Concrete Load	0	-1.76	-3.30	-4.50	-5.24	-5.50	-5.24	-4.50	-3.30	-1.76	0
	Superimposed Dead Load	0	-0.64	-1.20	-1.63	-1.90	-1.99	-1.90	-1.63	-1.20	-0.64	0
Interior	Steel Dead Load	0	-0.97	-1.84	-2.50	-2.92	-3.06	-2.92	-2.50	-1.84	-0.97	0
	Deck Concrete Load	0	-2.15	-4.03	-5.48	-6.40	-6.71	-6.40	-5.48	-4.03	-2.15	0
	Superimposed Dead Load	0	-0.60	-1.13	-1.52	-1.79	-1.87	-1.79	-1.52	-1.13	-0.60	0

STRUCTURAL STEEL NOTES

1. Camber ordinates, as shown, are computed to compensate for all dead load deflections and for the finished grade profile.

2. No transverse butt-weld splices will be allowed in the flange plates or web plates within 10 feet or 10% of the span length (whichever is greater) from the points of maximum negative moment or maximum positive moment. Butt-weld splices in flanges shall be not less than 3 feet from transverse butt-welds in the web plates and no transverse web or flange butt-welds shall be located within 3 feet of other transverse welds (e.g. connection plates to web welds) on either flange or web. No transverse butt-weld splices will be allowed in areas of stress reversal.

3. Sections of flange plates or web plates between transverse shop splices or between a transverse shop splice and a field splice shall be not less than 20 feet in length unless otherwise shown on the plans.

4. Bearing stiffeners shall be plumb after erection and dead loading of the structure. Intermediate web stiffeners may be either plumb or normal to the top flange.

5. Crossframe or diaphragm connection plates may be either plumb or normal to the top flange.

6. All connection plates and stiffeners shall be welded to the top and bottom flanges using 5/16" fillet welds.

7. Optional bolted field splice connections shall be made using 7/8"ϕ ASTM A325 bolts. Hole size shall be 15/16"ϕ. Bolts shall be installed with heads down at all bottom flange connections and heads up at all top flange connections. Bolt threads shall be excluded from the shear plane of the field splice connection.

8. If Precast Concrete Deck Panels are used to construct the superstructure slab, the heads of the shear connectors shall extend a minimium of 1 inch above the top of the panels.

9. The ends of the girders and the end diaphragms shall be coated with a zinc-rich coating system in accordance with Special Provision Section 506 to a distance of 10 feet from the face fo the abutments.

HNTB

STATE OF MAINE
DEPARTMENT OF TRANSPORTATION

BR-1666(700)X

WIN 16667.00

BRIDGE NO. 2754

BRIDGE PLANS

		BY	DATE
PROJ. MANAGER	S. Bodge		
DESIGN-DETAILED	J. Waugh	M. Cundiff	01\13
CHECKED-REVIEWED	A. Tower	T. Cote	01\13
DESIGN2-DETAILED2	-	-	-
DESIGN3-DETAILED3	-	-	-
REVISIONS 1	-	-	-
REVISIONS 2	-	-	-
REVISIONS 3	-	-	-
REVISIONS 4	-	-	-
FIELD CHANGES	-	-	-

SIGNATURE

P.E. NUMBER

DATE

SECOND OTTER BRIDGE
OTTER STREAM
MILFORD PENOBSCOT COUNTY

STRUCTURAL STEEL DETAILS

SHEET NUMBER

24

OF 29

Filename: 024_SteelDets.dgn Division: BRIDGE Username: MCundiff Date:1/31/2013

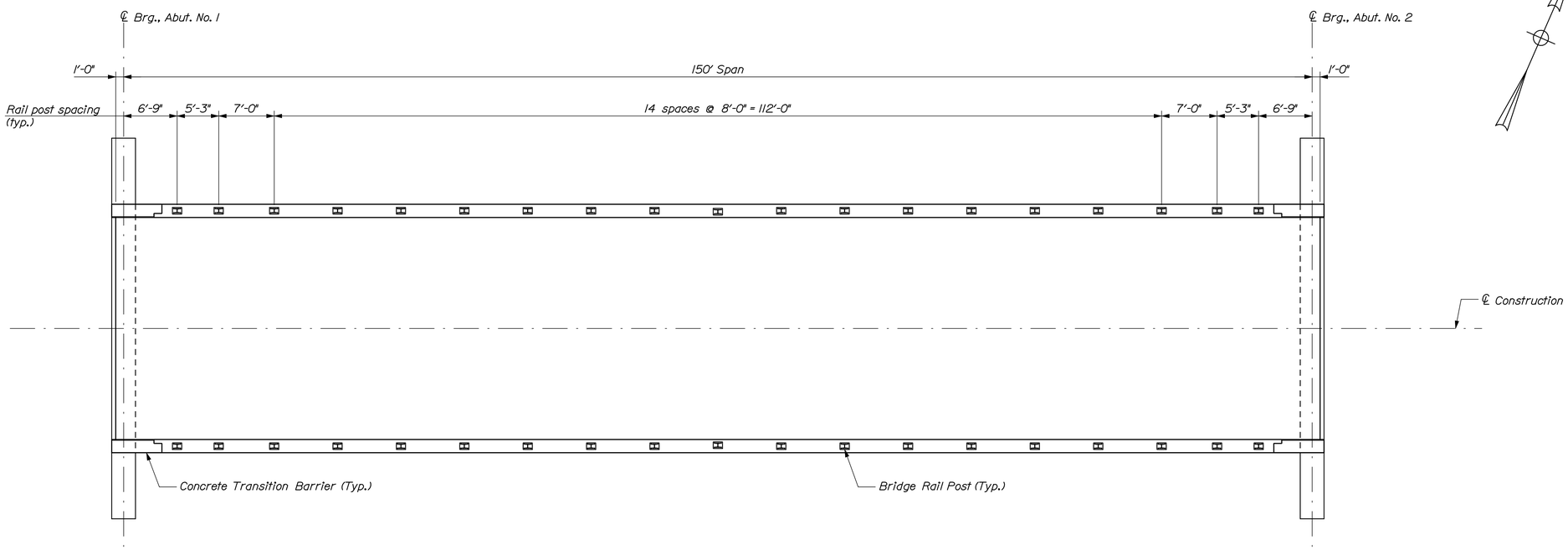

SUPERSTRUCTURE PLAN

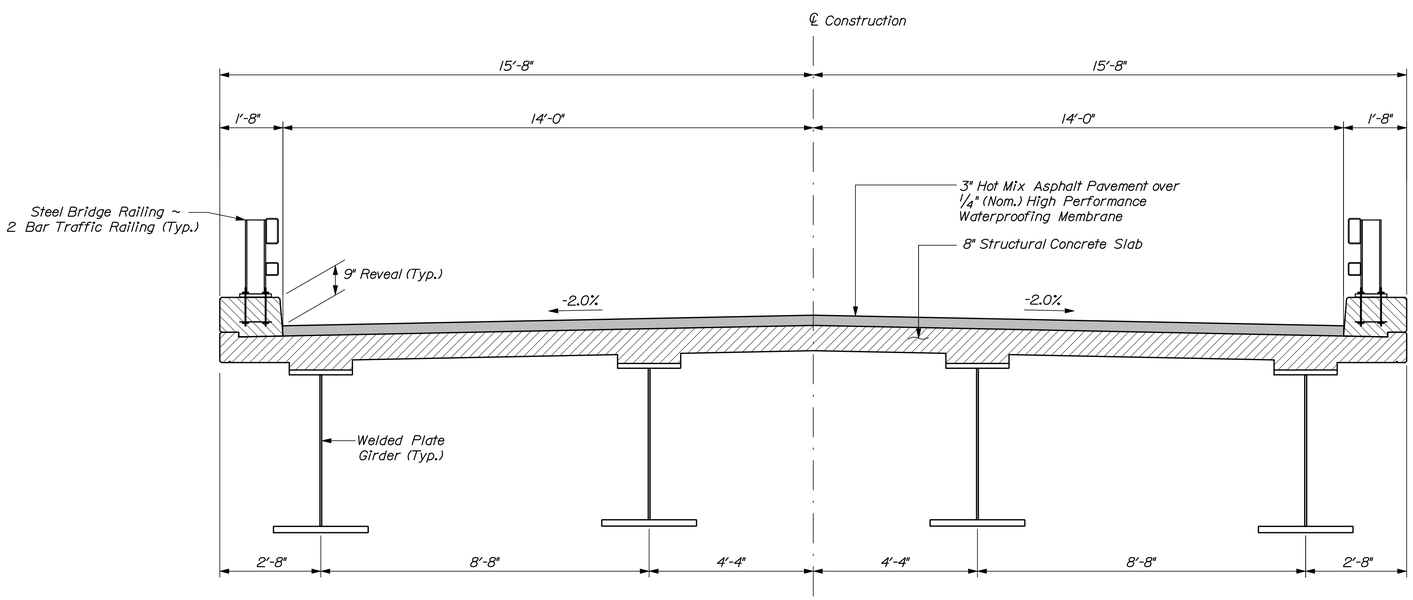

TRANSVERSE SECTION

SUPERSTRUCTURE NOTES

1. The theoretical blocking used for design of the structure is 3½" inches (2" clear) at the centerline of bearing of the abutments. Refer to Standard Detail 502(02) for blocking details.

2. Reinforcing steel shall have a minimum concrete cover of 2" unless otherwise noted.

3. Form a one inch V-groove on the fascias at the horizontal joint between the curb and slab.

4. The superstructure slab shall be placed in one continuous operation and shall be kept plastic until the entire placement has been made.

5. At the Contractor's option, Precast Deck Panels may be used in place of the full depth cast-in-place deck slab, in accordance with Special Provisions Section 502, Structural Concrete - Precast Deck Panels, and in accordance with the Standard Details.

6. Payment for the reinforcing steel fabricated, delivered, and placed in the cast-in-place portion of the structural concrete slab will be considered incidental to the approriate Section 502 pay item.

7. Provide 3 additional stirrups in the curbs at each Transition Barrier location.

8. The Contractor shall install Transition Barrier vertical closed stirrups, as shown in Standard Details Section 526, prior to the placement of the curb or sidewalk concrete.

HNTB

STATE OF MAINE
DEPARTMENT OF TRANSPORTATION

BR-1666(700)X

WIN 16667.00

BRIDGE NO. 2754

BRIDGE PLANS

		BY	DATE
PROJ. MANAGER	S. Bodge		
DESIGN-DETAILED	J. Waugh	M. Cundiff	01\13
CHECKED-REVIEWED	A. Tower	T. Cote	01\13
DESIGN2-DETAILED2	-	-	-
DESIGN3-DETAILED3	-	-	-
REVISIONS 1	-	-	-
REVISIONS 2	-	-	-
REVISIONS 3	-	-	-
REVISIONS 4	-	-	-
FIELD CHANGES	-	-	-

SIGNATURE

P.E. NUMBER

DATE

SECOND OTTER BRIDGE
OTTER STREAM
MILFORD PENOBSCOT COUNTY

SUPERSTRUCTURE PLAN

SHEET NUMBER
25
OF 29

Filename: 025_Superstructure_Plan.dgn Division: BRIDGE Username: MCundiff Date:1/31/2013

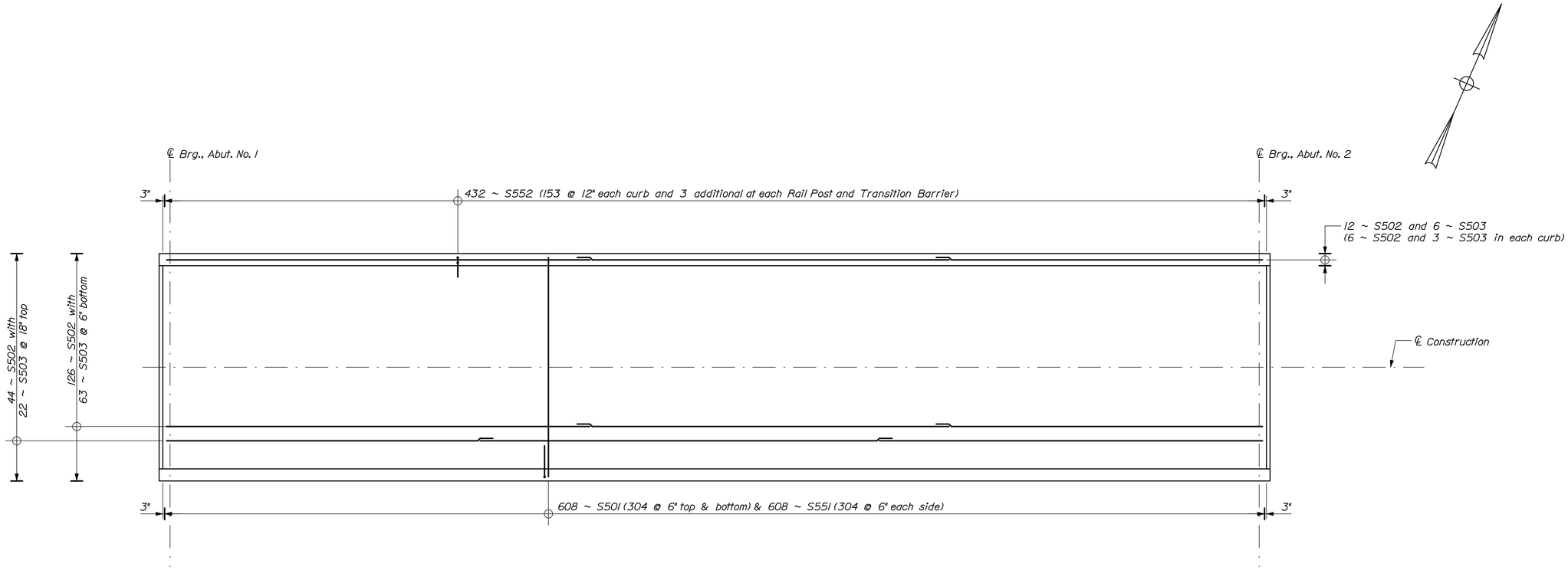

SUPERSTRUCTURE REINFORCING PLAN

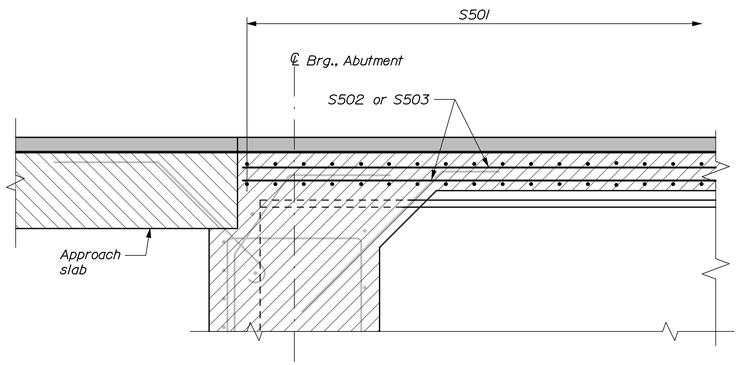

PARTIAL LONGITUDINAL SECTION

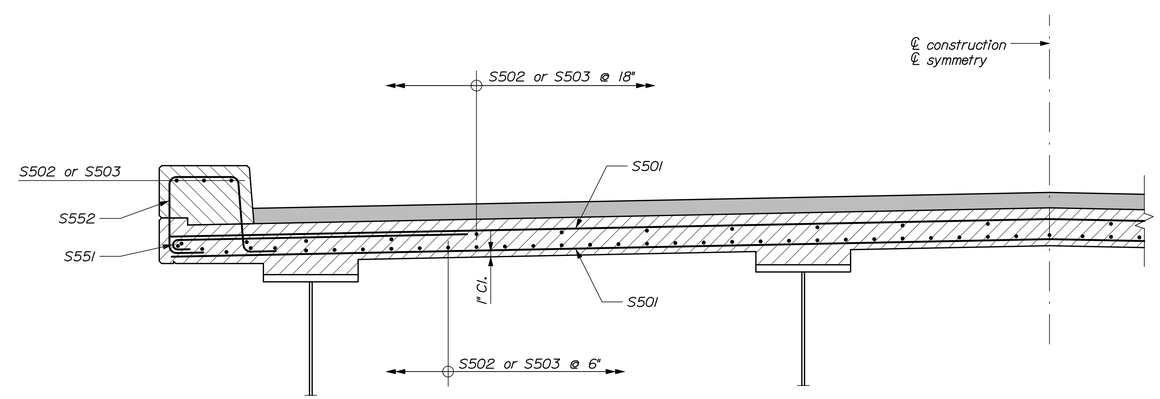

PARTIAL TRANSVERSE SECTION

NOTE:
Abutment and approach slab reinforcing shown screened for clarity.

HNTB

STATE OF MAINE
DEPARTMENT OF TRANSPORTATION

BR-1666(700)X

WIN 16667.00

BRIDGE NO. 2754

BRIDGE PLANS

		BY	DATE
PROJ. MANAGER	S. Bodge		
DESIGN-DETAILED	J. Waugh	M. Cundiff	01\13
CHECKED-REVIEWED	A. Tower	T. Cote	01\13
DESIGN2-DETAILED2	-	-	-
DESIGN3-DETAILED3	-	-	-
REVISIONS 1	-	-	-
REVISIONS 2	-	-	-
REVISIONS 3	-	-	-
REVISIONS 4	-	-	-
FIELD CHANGES	-	-	-

SIGNATURE

P.E. NUMBER

DATE

SECOND OTTER BRIDGE
OTTER STREAM
MILFORD PENOBSCOT COUNTY

SUPERSTRUCTURE REINFORCING

SHEET NUMBER
26
OF 29

Filename: 026_Superstructure_Reinf.dgn Division: BRIDGE Username: MCundiff Date:1/31/2013

STRAIGHT BARS

MARK	QTY.	LENGTH	INCREMENT	LOCATION
			ABUTMENT NO. 1	
A503	1	32'-0"	--	Top of Abutment
			--	
A800	8	47'-8"	--	Front Face of Abut
A801	3	38'-11" to 45'-11"	3'-6"	Front Face of Abut (Array)
A1000	15	47'-8"	--	Back Face of Abut
A1001	6	38'-11" to 47'-8"	1'-9"	Back Face of Abut (Array)
			ABUTMENT NO. 2	
B503	1	32'-0"	--	Top of Abutment
B800	8	47'-8"	--	Front Face of Abut
B801	3	38'-11" to 45'-11"	3'-6"	Front Face of Abut (Array)
B1000	15	47'-8"	--	Back Face of Abut
B1001	6	38'-11" to 47'-8"	1'-9"	Back Face of Abut (Array)
		APPROACH & SLEEPER SLABS		
AS500	82	19'-8"	--	Top Longitudinal
AS501	84	26'-8"	--	Top & Bot Transverse
AS900	82	19'-8"	--	Bot Longitudinal
SS400	16	26'-8"	--	Longitudinal
			SUPERSTRUCTURE	
S501*	608	31'-0"	--	Top & Bot. Transverse
S502*	182	60'-0"	--	Top & Bot Longitudinal
S503*	91	35'-4"	--	Top & Bot Longitudinal

BENT BARS

MARK	QTY.	LENGTH	TYPE	A	B	C	D	E	F	G	H	O	R	INCREMENT	LOCATION
								ABUTMENT NO. 1							
A500	32	5'-1 1/2"	CA	7"	2'-8 1/2"	1'-10"	--	--	--	--	1'-3 1/2"	--	--	--	Approach Slab Bar
A501	32	5'-7"	PT	1'-10"	1'-11"	1'-10"	--	--	--	--	--	--	--	--	Deck Slab Bar
A502	32	5'-10"	V	--	--	--	4'-0"	1'-10"	--	--	1'-3 1/2"	--	--	--	Deck Slab Bar
A504	6	8'-10 1/2"	V	--	--	--	7'-10 1/2"	1'-0"	--	--	6"	--	--	--	Top of Wingwall
A505	16	8'-0"	S	--	2'-8"	2'-8"	2'-8"	--	--	--	--	--	--	--	End of Wingwalls
A506	96	3'-10"	C	7"	2'-8"	7"	--	--	--	--	--	--	--	--	Abutment Shear Ties
A600	96	16'-9 1/2"	S	--	7'-2"	2'-5 1/2"	7'-2"	--	--	--	--	--	--	--	Bot Vert. Stirrup
A601	64	11'-5 1/2"	S	--	4'-6"	2'-5 1/2"	4'-6"	--	--	--	--	--	--	--	Top Vert. Stirrup
A602	30	7'-5 1/2" to 15'-7 1/2"	S	--	2'-6" to 6'-7"	2'-5 1/2"	2'-6" to 6'-7"	--	--	--	--	--	--	B=D=3 1/2"	Top Vert. Stirrup
A603	2	15'-2"	S	--	6'-4 1/4"	2'-5 1/2"	6'-4 1/4"	--	--	--	--	--	--	--	Top Vert. Stirrup
								ABUTMENT NO. 2							
B500	32	5'-1 1/2"	CA	7"	2'-8 1/2"	1'-10"	--	--	--	--	1'-3 1/2"	--	--	--	Approach Slab Bar
B501	32	5'-7"	PT	1'-10"	1'-11"	1'-10"	--	--	--	--	--	--	--	--	Deck Slab Bar
B502	32	5'-10"	V	--	--	--	4'-0"	1'-10"	--	--	1'-3 1/2"	--	--	--	Deck Slab Bar
B504	6	8'-10 1/2"	V	--	--	--	7'-10 1/2"	1'-0"	--	--	6"	--	--	--	Top of Wingwall
B505	16	8'-0"	S	--	2'-8"	2'-8"	2'-8"	--	--	--	--	--	--	--	End of Wingwalls
B506	96	3'-10"	C	7"	2'-8"	7"	--	--	--	--	--	--	--	--	Abutment Shear Ties
B600	96	16'-9 1/2"	S	--	7'-2"	2'-5 1/2"	7'-2"	--	--	--	--	--	--	--	Bot Vert. Stirrup
B601	64	11'-5 1/2"	S	--	4'-6"	2'-5 1/2"	4'-6"	--	--	--	--	--	--	--	Top Vert. Stirrup
B602	30	7'-5 1/2" to 15'-7 1/2"	S	--	2'-6" to 6'-7"	2'-5 1/2"	2'-6" to 6'-7"	--	--	--	--	--	--	B=D=3 1/2"	Top Vert. Stirrup
B603	2	15'-2"	S	--	6'-4 1/4"	2'-5 1/2"	6'-4 1/4"	--	--	--	--	--	--	--	Top Vert. Stirrup
								APPROACH & SLEEPER SLABS							
SS401	56	7'-5"	H	4.5"	8"	2'-8"	8"	2'-8"	--	4.5"	--	--	--	--	Bot Stirrup
SS402	56	6'-1"	H	4.5"	8"	2'-0"	8"	2'-0"	--	4.5"	--	--	--	--	Top Stirrup
								SUPERSTRUCTURE							
S551*	608	5'-10"	C	7"	5'-3"	0	--	--	--	--	--	--	--	--	Deck Overhang
S552*	432	5'-7 1/2"	SC	10"	1'-4 1/4"	1'-3"	1'-4 1/4"	--	--	10"	--	1'-4 3/8"	--	--	Curb Reinforcement

TYPE - BENDING DIAGRAMS

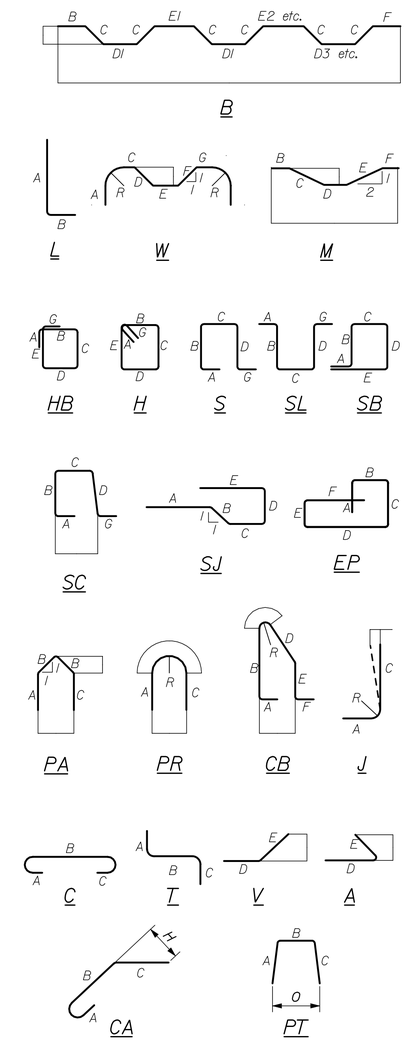

* Bar is incidental to related concrete pay item.

All dimensions are out-to-out of bar.

Bending details and hooks shall conform to the recommendations of the current revision of ACI Standard 315 and ACI Standard 318.

Reinforcing Bar: ASTM A615/A615M, Grade 60

GENERAL NOTES

1. The first two digits following the letter(s) of the mark indicate the size ofthe bar:

   Mark "A502" = bar size #5
   Mark "P805" = bar size #8
   Mark "S650" = bar size #6

2. Each crank bar, Type B, may be replaced by two (2) straight bars (one top and one bottom) of the same bar size as the crank bar. Payment in either case shall be based on crank bars as schedule on the plans.

HNTB

STATE OF MAINE
DEPARTMENT OF TRANSPORTATION

BR-1666(700)X

WIN 16667.00

BRIDGE NO. 2754

BRIDGE PLANS

PROJ. MANAGER	S. Bodge	BY	DATE
DESIGN-DETAILED	A. Tower	M. Cundiff	01\13
CHECKED-REVIEWED	J. Waugh	T. Cote	01\13
DESIGN2-DETAILED2	-	-	-
DESIGN3-DETAILED3	-	-	-
REVISIONS 1	-	-	-
REVISIONS 2	-	-	-
REVISIONS 3	-	-	-
REVISIONS 4	-	-	-
FIELD CHANGES	-	-	-

SIGNATURE

P.E. NUMBER

DATE

SECOND OTTER BRIDGE
OTTER STREAM
MILFORD PENOBSCOT COUNTY

REINFORCING STEEL SCHEDULE

SHEET NUMBER

27

OF 29

Filename: 027_SteelSchedule.dgn Division: BRIDGE Username: mcundiff Date:2/1/2013

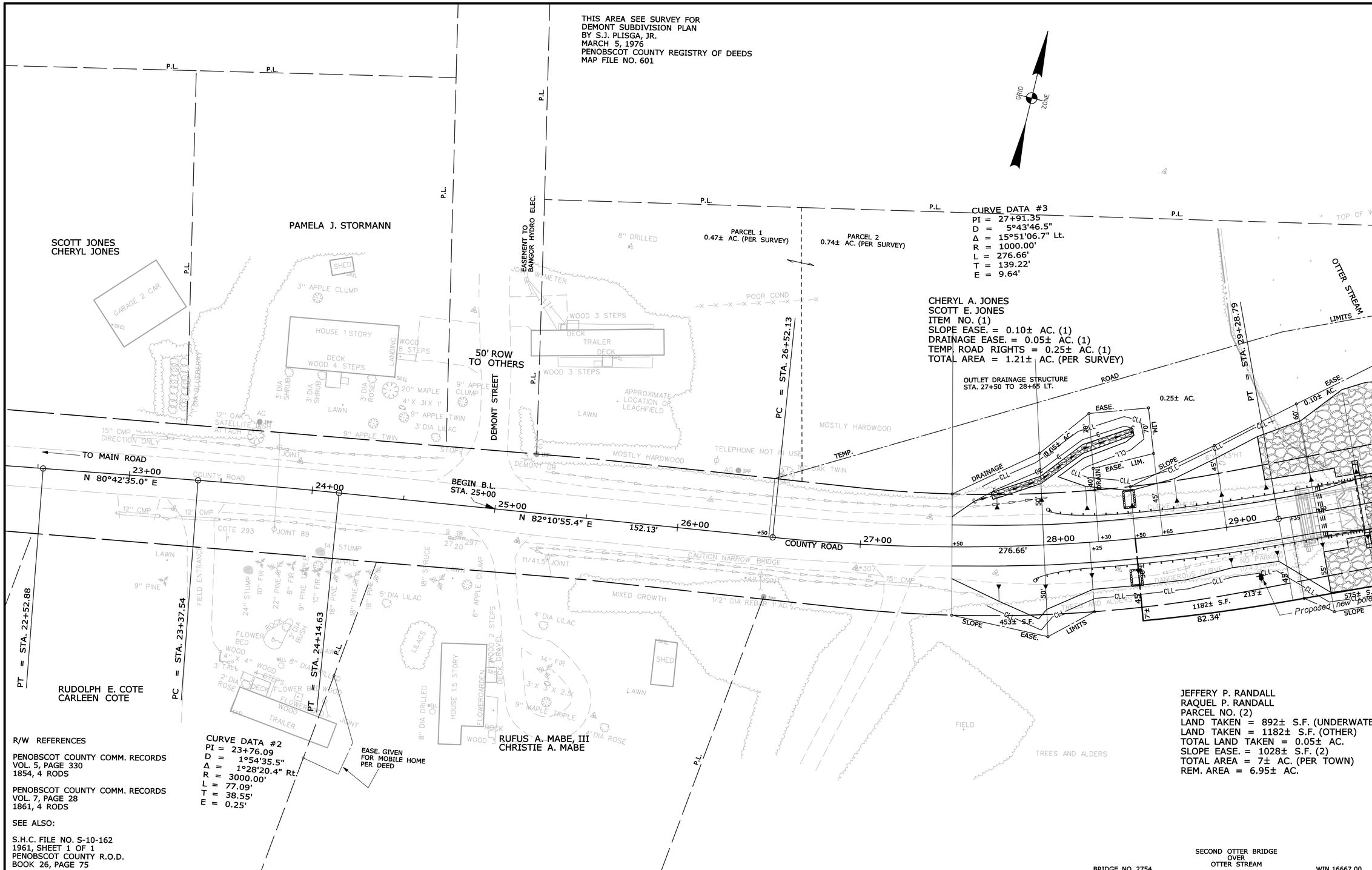

R/W REFERENCES

PENOBSCOT COUNTY COMM. RECORDS
VOL. 5, PAGE 330
1854, 4 RODS

PENOBSCOT COUNTY COMM. RECORDS
VOL. 7, PAGE 28
1861, 4 RODS

SEE ALSO:

S.H.C. FILE NO. S-10-162
1961, SHEET 1 OF 1
PENOBSCOT COUNTY R.O.D.
BOOK 26, PAGE 75

THIS PLAN WAS PREPARED IN CONNECTION WITH THE DEPARTMENT'S ACQUISITION OF REAL PROPERTY FOR TRANSPORTATION PURPOSES. IT CANNOT BE USED TO ESTABLISH LEGAL BOUNDARIES BETWEEN ABUTTING PROPERTY OWNERS.

SYMBOLS

- IP or IPF (IRON PIPE or PIN FOUND)
- S.T. (SEPTIC TANK)
- (ROW MONUMENT)
- BM (TRAVERSE POINT)
- WATER LINE
- GAS LINE
- ELECTRIC LINE
- TELEPHONE LINE
- SEWER LINE
- WELL (WELL)
- GRADING LIMIT LINE
- CONSTRUCTION LIMIT LINE
- PROPERTY LINE
- LIMITS OF WROUGHT PORTION (L.O.W.P.)
- EXISTING RIGHT OF WAY
- NEW RIGHT OF WAY
- NEW ROW WITHIN EXIST. ROW
- CONTROL OF ACCESS

ITEM	TECH	CHECKED
BASE MAP	BDM	
EXIST. R/W	BDM	
PROP. LINES	BDM	
AREAS	BDM	

STATE OF MAINE
DEPARTMENT OF TRANSPORTATION
16 STATE HOUSE STATION - AUGUSTA, ME 04333-0016
MILFORD
RIGHT OF WAY MAP

REVISIONS			
NO.	DATE	DESCRIPTION	BY

PLAN FILED IN PLAN BOOK PAGE COUNTY RECORD

NO.	GRANTOR	INSTRUMENT	DATE	BOOK	PAGE

DAVID BERNHARDT
COMMISSIONER
KENNETH L. SWEENEY
CHIEF ENGINEER
DATE

TOWN WAY
COUNTY ROAD
MILFORD PENOBSCOT COUNTY
FEDERAL AID PROJECT NUMBER BR-1666(700)X

NOVEMBER 2012 | RIGHT-OF-WAY MAP | D.O.T. FILE NO. 10-480
SCALE 1" = 25' | SHEET 1 OF 2

SHEET NUMBER
28
OF 29

Filename: 028_RWPLAN1.dgn Division: BRIDGE Username: MCundiff Date:1/31/2013

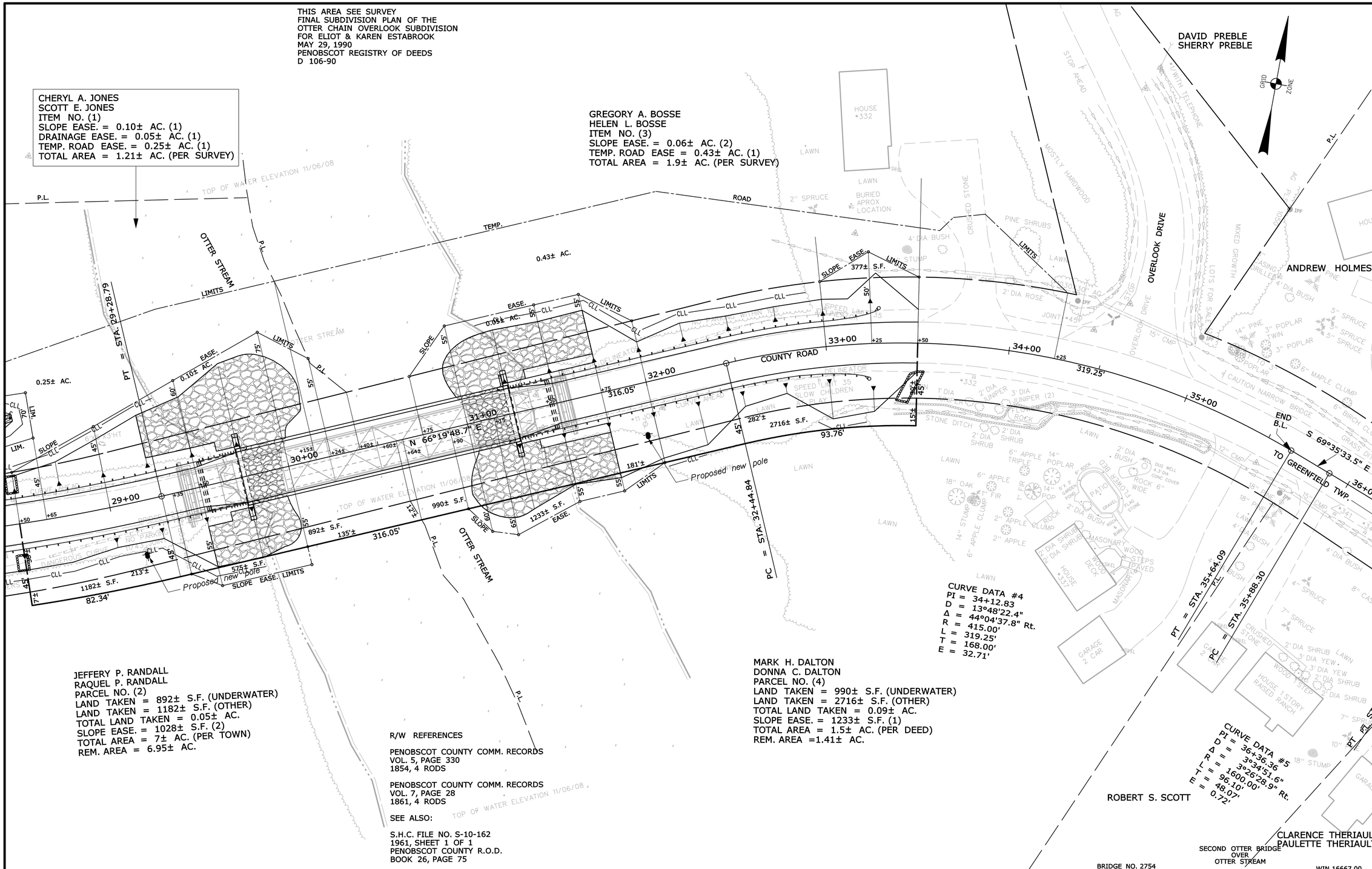

THIS PLAN WAS PREPARED IN CONNECTION WITH THE DEPARTMENT'S ACQUISITION OF REAL PROPERTY FOR TRANSPORTATION PURPOSES. IT CANNOT BE USED TO ESTABLISH LEGAL BOUNDARIES BETWEEN ABUTTING PROPERTY OWNERS.

SYMBOLS

- IP or IPF (IRON PIPE or PIN FOUND)
- S.T. (SEPTIC TANK)
- (ROW MONUMENT)
- BM (TRAVERSE POINT)
- WELL (WELL)
- GRADING LIMIT LINE
- CONSTRUCTION LIMIT LINE
- PROPERTY LINE
- LIMITS OF WROUGHT PORTION (L.O.W.P.)
- EXISTING RIGHT OF WAY
- NEW RIGHT OF WAY
- NEW ROW WITHIN EXIST. ROW
- CONTROL OF ACCESS
- WATER LINE
- GAS LINE
- ELECTRIC LINE
- TELEPHONE LINE
- SEWER LINE

ITEM	TECH	CHECKED
BASE MAP	BDM	
EXIST. R/W	BDM	
PROP. LINES	BDM	
AREAS	BDM	

STATE OF MAINE
DEPARTMENT OF TRANSPORTATION
16 STATE HOUSE STATION - AUGUSTA, ME 04333-0016
MILFORD
RIGHT OF WAY MAP

REVISIONS			
NO.	DATE	DESCRIPTION	BY

PLAN FILED IN PLAN BOOK PAGE COUNTY RECORD

NO.	GRANTOR	INSTRUMENT	DATE	BOOK	PAGE

DAVID BERNHARDT
COMMISSIONER
KENNETH L. SWEENEY
CHIEF ENGINEER
DATE

TOWN WAY
COUNTY ROAD
MILFORD PENOBSCOT COUNTY
FEDERAL AID PROJECT NUMBER BR-1666(700)X

NOVEMBER 2012 | RIGHT-OF-WAY MAP | D.O.T. FILE NO. 10-480
SCALE 1" = 25' | SHEET 2 OF 2

SHEET NUMBER
29
OF 29

Filename: 029_RWPLAN2.dgn Division: BRIDGE Username: MCundiff Date:1/31/2013