STATE OF MAINE
DEPARTMENT OF TRANSPORTATION

SPECIFICATIONS

Design: Load and Resistance Factor Design per AASHTO LRFD Bridge Design Specifications, Sixth Edition 2012.

DESIGN LOADING

Live Load ..... HL - 93 Modified for Strength I

TRAFFIC DATA

Current (2012) AADT	1,470
Future (2032) AADT	2,060
DHV - % of AADT	10%
Design Hour Volume	206
Heavy Trucks (% of AADT)	14%
Heavy Trucks (% of DHV)	14%
Directional Distribution (% of DHV)	55%
18 kip Equivalent P 2.0	275
18 kip Equivalent P 2.5	262
Design Speed (mph)	35

HYDROLOGIC DATA

Drainage Area	1999 sq mi
Design Discharge (Q50)	53,340 cfs
Check Discharge (Q100)	58,250 cfs
Record Flood Discharge (1936)	74,000 cfs
Headwater Elevation (Q50)	623.9 ft
Headwater Elevation (Q100)	625.7 ft
Headwater Elevation (1936)	630.7 ft
Discharge Velocity (Q50)	4.9 fps
Discharge Velocity (Q100)	4.6 fps
Discharge Velocity (1936)	4.2 fps
Headwater Elevation (Q1.1)	613.1 ft
Discharge Velocity (Q1.1)	4.5 fps
Headwater Elevation (Q25)	622.8 ft

MATERIALS

Concrete:	
Barriers, Curbs, Sidewalks & Transition Barriers	Class "LP"
Seals	Class "S"
Precast	Class "P"
Fill	"Fill"
All Other	Class "A"
Reinforcing Steel	ASTM A 615/A 615M, Grade 60
Structural Steel:	
All Material (except as noted)	ASTM A 709, Grade 50W
High Strength Bolts	ASTM A 325, Type 3

BASIC DESIGN STRESSES

Concrete	f 'c = 4,350 psi
Reinforcing Steel	f y = 60,000 psi
Structural Steel:	
ASTM A 709, Grade 50W	F y = 50,000 psi
ASTM A 709, Grade 36	F y = 36,000 psi
ASTM A 325	F u = 120,000 psi

RUMFORD
OXFORD COUNTY
MARTIN MEMORIAL BRIDGE
OVER
ANDROSCOGGIN RIVER
STATE ROUTE 232
BH-1510(500)X
PROJECT LENGTH 0.398 mi.
BRIDGE NO. 3248

LIST OF DRAWINGS

Title Sheet	1
Estimated Quantities	2
General Notes	3
Typical Sections	4 to 5
Drainage Sheet	6
General Plan	7 to 10
Profile	11 to 14
Geometrics and Curb Layout Plan	15
Traffic Management Plan	16 to 19
Steel Backed Timber Guardrail Details	20
Guardrail Details	21
Highway Approach Cross Sections - Route 232	22 to 39
Highway Approach Cross Sections - Route 2	40 to 43
Highway Approach Cross Sections - Old Route 232	44 to 45
Boring Location Plans	46 to 47
Interpretive Subsurface Profile	48
Boring Logs	49 to 61
Ground Improvement Plan	62
Abutment 1	63 to 66
Abutment 2	67 to 70
Piers	71 to 73
Bearings	74 to 75
Structural Steel Details	76 to 78
Superstructure	79 to 80
Miscellaneous Superstructure Details	81
Bridge Drains	82
Reinforcing Steel Schedule	83 to 88
Utility Plans	89 to 91
Right-of-Way Maps	92 to 95

UTILITIES

Central Maine Power Company
FairPoint Communications
Maine Fiber Company
Oxford Networks
Rumford-Mexico Sewerage District
Rumford Water District
Time Warner Cable

MAINTENANCE OF TRAFFIC

Maintain two - way traffic on existing bridge.

PROJECT LOCATION:	Martin Memorial Bridge will be on the New Route 232 Alignment which will cross the Androscoggin River approximately 600 ft upstream from the current bridge location. Lat./Long. 44°30'3.07" N 70°40'24.61" W
PROGRAM AREA:	Bridge Program
OUTLINE OF WORK:	Bridge Replacement Project upstream from the current bridge location and associated roadway construction

WIN 15105.00

BH-1510(500)X

TranSystems

STATE OF MAINE
DEPARTMENT OF TRANSPORTATION

	DATE
APPROVED	
COMMISSIONER	6/19/13
CHIEF ENGINEER	6/19/13

STATE OF MAINE — EVAN C. LOWELL — NO. 6055 — LICENSED — PROFESSIONAL ENGINEER — 6/17/13

SIGNATURE	
P.E. NUMBER	9065
DATE	6/17/2013

PROJECT INFORMATION

PROGRAM	BRIDGE
PROJECT MANAGER	S. BODGE
DESIGNER	C. CAMACHE
CONSULTANT	TRANSYSTEMS
PROJECT RESIDENT	
CONTRACTOR	
PROJECT COMPLETION DATE	

RUMFORD
MARTIN MEMORIAL BRIDGE

TITLE SHEET

SHEET NUMBER
1
OF 95

Filename: \B012\0030\Road\001_Title.dgn Division: BRIDGE Username: T SANDELL Date:6/17/2013

ESTIMATED QUANTITIES			
ITEM NO.	DESCRIPTION	QUANTITY	UNIT
202.08	REMOVING BUILDING NO.: 1	1	LS
202.08	REMOVING BUILDING NO.: 2	1	LS
202.08	REMOVING BUILDING NO.: 3	1	LS
202.19	REMOVING EXISTING BRIDGE (310 Tons, 2065 CY)	1	LS
202.2	REM BITUMINOUS CONC PAVEMENT (3,900 SY)	1	SY
202.202	REMOVING PAVEMENT SURFACE	690	SY
202.203	PAVEMENT BUTT JOINTS	229	SY
203.2	COMMON EXCAVATION	11,931	CY
203.21	ROCK EXCAVATION	10	CY
203.218	VIBRO-REPLACEMENT GROUND IMPROVEMENT	1	LS
203.24	COMMON BORROW	14,731	CY
203.25	GRANULAR BORROW	2,297	CY
206.082	STR EA EXC-MAJOR STRUCTURES	1,250	CY
304.1	AGGR SUBB COURSE - GRAVEL	5,650	CY
403.207	HOT MIX ASPHALT 19.0 MM HMA	1,150	T
403.208	HOT MIX ASPHALT 12.5 MM HMA SURFACE	525	T
403.2081	12.5 MM POLYMER MODIFIED HMA	110	T
403.209	HOT MIX ASPHALT 9.5 MM (INCIDENTALS)	49	T
403.211	HOT MIX ASPHALT (SHIM)	80	T
403.213	HOT MIX ASPHALT 12.5 MM BASE	575	T
409.15	BITUMINOUS TACK COAT - APPLIED	340	G
461.131	TEMPORARY PAVEMENT	28	T
501.231	DYNAMIC LOADING TEST	12	EA
501.70	STEEL PIPE PILES, DELIVERED 14" Diameter	5,465	LF
501.70	STEEL PIPE PILES, DELIVERED 24" Diameter	3,292	LF
501.701	STEEL PIPE PILES, IN PLACE 14" Diameter	5,465	LF
501.701	STEEL PIPE PILES, IN PLACE 24" Diameter	3,292	LF
501.90	PILE TIPS	93	EA
501.91	PILE SPLICES	154	EA
501.92	PILE DRIVING EQUIPMENT MOBILIZATION	1	LS
502.219	STRUCTURAL CONCRETE, ABUTMENTS AND WINGWALLS (550 CY)	1	LS
502.239	STRUCTURAL CONCRETE, PIERS (680 CY)	1	LS
502.24	STRUCTURAL CONCRETE, PIERS (PLACED UNDERWATER)	902	CY
502.26	STR CONC RD & SW SLABS ON STEEL BRIDGE (555 CY)	1	LS
502.31	STRUCTURAL CONCRETE APPROACH SLABS (30 CY)	1	LS
502.49	STRUCTURAL CONCRETE CURBS AND SIDEWALKS (75 CY)	1	LS
503.12	REINFORCING STEEL, FABRICATED/DELIVERED	262,000	LB
503.13	REINFORCING STEEL, PLACING	262,000	LB
503.14	EPOXY-COATED REINF STEEL, FAB'D/DELIV'D	12,000	LB
503.15	EPOXY-COATED REINFORCING STEEL, PLACING	12,000	LB
504.702	STRUCTURAL STEEL FAB'D & DELIV'D, WELDED (800,000 LB)	1	LS
504.71	STRUCTURAL STEEL ERECTION (800,000 LB)	1	LS
505.08	SHEAR CONNECTORS (5,565 EA)	1	LS
507.0821	STEEL BRIDGE RAILING, 3 BAR (1,010 LF)	1	LS
508.14	HIGH PERFORMANCE WATERPROOFING MEMBRANE (1,800 SY)	1	LS
511.07	COFFERDAM, PIER 1	1	LS
511.07	COFFERDAM, PIER 2	1	LS
512.081	FRENCH DRAINS (145 LF)	1	LS
514.06	CURING BOX FOR CONC CYL	1	EA
515.21	PROTECTIVE COATING FOR CONCRETE SURFACES (1,200 SY)	1	LS
520.21	EXPANSION DEVICE - GLAND SEAL	2	EA
523.52	BEARING INSTALLATION	20	EA
523.5402	LAMINATED ELASTOMERIC BEARINGS,EXPANSION	20	EA
524.301	TEMPORARY STRUCTURAL SUPPORT	1	LS
526.3401	PERM CONC TRANSITION BARRIER - MODIFIED	4	EA
527.303	ENERGY ABSORBING SYSTEM (ET-PLUS)	1	EA
603.159	12 INCH CULVERT PIPE OPTION III	124	LF
603.16	15" CULV PIPE OPTION I	28	LF
603.19	24" CULV PIPE OPTION I	26	LF
603.209	30" CULV PIPE OPTION III	108	LF
603.249	54" CULV PIPE OPTION III	256	LF
604.164	REBUILDING CATCH BASIN	1	EA
604.18	ADJUST MANHOLE OR CB TO GRADE	1	EA
604.182	CLEAN EXISTING C.B. AND MANHOLE	1	EA
604.072	CATCH BASIN TYPE AI-C	1	EA
604.14	30" CATCH BASIN TYPE E	1	EA
606.1721	BRIDGE TRANSITION - TYPE 1	4	EA
606.23	GR TY 3C - SINGLE RAIL	701	LF
606.232	GR TY 3C - OVER 15' RADIUS	87.5	LF
606.265	TERM END- SGL RAIL- GALV STEEL	2	EA
606.353	REFLECTORIZED FLEXIBLE GUARDRAIL MARKER	16	EA
606.363	GR REMOVE AND DISPOSE	730	LF
606.369	GR REMOVED AND STACKED	200	LF
606.61	STEEL - BACKED TIMBER GUARDRAIL	62	LF
606.79	GUARDRAIL 350 FLARED TERMINAL	3	EA
607.24	REMOVE AND RESET FENCE	360	LF
609.11	VERT CURB TYPE 1	240	LF
609.12	VERT CURB TYPE 1- CIRCULAR	115	LF
609.234	TERMINAL CURB TYPE 1 - 4 FOOT	7	EA
* 609.38	RESET CURB TYPE 1	80	LF
610.08	PLAIN RIPRAP	1,650	CY
610.18	STONE DITCH PROTECTION	120	CY
610.45	LEVEL LIP SPREADER	1	LS

* UNDETERMINED LOCATION

ESTIMATED QUANTITIES			
ITEM NO.	DESCRIPTION	QUANTITY	UNIT
610.53	STONE CHECK DAM	40	CY
612.06	BITUMINOUS SEALING - BLACK	300	SY
613.319	EROSION CONTROL BLANKET	5,800	SY
615.07	LOAM	850	CY
618.1301	SEEDING METHOD NUMBER 1 - PLAN QUANTITY	15	UN
618.1401	SEEDING METHOD NUMBER 2 - PLAN QUANTITY	47	UN
618.1411	SEEDING METHOD NUMBER 3 - PLAN QUANTITY	71	UN
619.1201	MULCH - PLAN QUANTITY	59	UN
619.1401	EROSION CONTROL MIX	110	CY
620.54	STABILIZATION GEOTEXTILE	23	SY
* 622.11	TRANSPLANTING TREE	1	EA
627.18	12" SOLID WHITE PAVEMENT MARKING	92	LF
627.75	WHITE OR YELLOW PAVEMENT & CURB MARKING	3,150	SF
627.78	TEMP 4" PAINT PVMT MARK LINE W OR Y	8,650	LF
* 629.05	HAND LABOR, STRAIGHT TIME	100	HR
* 631.12	ALL PURPOSE EXCAVATOR (INC OPERATOR)	50	HR
* 631.132	SMALL BULLDOZER (INC OPERATOR)	50	HR
* 631.14	GRADER (INCLUDING OPERATOR)	100	HR
* 631.15	ROLLER EARTH BASE CRS (INC OP)	50	HR
* 631.172	TRUCK - LARGE (INCLUDING OPERATOR)	100	HR
* 631.2	STUMP CHIPPER (INC OPERATOR)	10	HR
* 631.22	FRONT END LOADER (INCLUDING OPERATOR)	50	HR
637.071	DUST CONTROL	1	LS
639.18	FIELD OFFICE TYPE A	1	EA
641.351	REMOVE AND STACK FLAG POLE	1	EA
643.72	TEMPORARY TRAFFIC SIGNAL	1	LS
645.106	DEMOUNT REG, WRNG, CONF & RTE MARKER SGN	19	EA
645.116	REINST REG, WRN, CONF, & RTE MARKER SIGN	18	EA
645.271	REG WARN CONF RTE SIGNS TYPE 1	70	SF
652.33	DRUM	100	EA
652.34	CONE	100	EA
652.35	CONSTRUCTION SIGNS	220	SF
652.361	MAINTENANCE OF TRAFFIC CONTROL DEVICES (100 CD)	1	LS
652.38	FLAGGER	1000	HR
652.41	PORTABLE CHANGEABLE MESSAGE SIGN	2	EA
656.75	TEMP SOIL EROSION & WATER POLLUTION CTRL	1	LS
659.1	MOBILIZATION	1	LS
660.21	ON-THE-JOB TRAINING (BID)	2,000	HR
910.301	SPECIAL WORK - UTILITY CONDUIT (Time Warner)	1	LS
910.301	SPECIAL WORK - UTILITY CONDUIT (FairPoint Communications)	1	LS
910.301	SPECIAL WORK - UTILITY CONDUIT (Oxford Networks)	1	LS
910.301	SPECIAL WORK - UTILITY CONDUIT (Maine Fiber Company)	1	LS

EARTHWORK SUMMARY

COMMON EXCAVATION FOR ESTIMATE

COMMON EXCAVATION (FROM CROSS SECTIONS)	10,586	
GRUBBING IN FILL	498	
UNDERCUT	847	
TOTAL COMMON EXCAVATION		11,931

FILL FOR BORROW CALCULATIONS

COMMON FILL (FROM CROSS SECTIONS)	21,313	
GRUBBING IN FILL	498	
UNDERCUT	847	
TOTAL FILL		22,658

AVAILABLE COMMON EXCAVATION FOR BORROW CALCULATIONS

(1) TOTAL COMMON EXCAVATION		11,931
DEDUCTIONS:		
GRUBBING IN FILL	498	
UNDERCUT	847	
(2) TOTAL DEDUCTIONS		1,345
TOTAL AVAILABLE COMMON EXCAVATION (1) MINUS (2)		10,586
TOTAL AVAILABLE STRUCT. EXCAVATIONS (USUALLY UNDERDRAIN ONLY)		
TOTAL AVAILABLE NON-ROCK EXCAVATION		10,586

COMPUTATION OF WASTE STORAGE & WASTE MATERIAL

TOTAL AVAIL. WASTE STORAGE AREA (FROM CROSS SECTIONS)		850
GRUBBING IN FILL	498	
UNDERCUT	847	
TOTAL WASTE MATERIAL TO BE UTILIZED (LOWER OF TOTAL AVAILABLE WASTE STORAGE AREA OR TOTAL WASTE MATERIAL)		1,345
TOTAL WASTE MATERIAL TO BE WASTED (TOTAL WASTE MATERIAL MINUS TOTAL WASTE MATERIAL TO BE UTILIZED)		495

COMPUTATION OF GRANULAR BORROW FOR ESTIMATE

GRANULAR BORROW FOR STRUCTURAL BACKFILL	1,150	
GRANULAR BORROW FOR UNDERCUTTING	847	
GRANULAR BORROW =	1,997 x 1.15=	2,297

COMPUTATION FOR COMMON BORROW FOR ESTIMATE

(3)TOTAL FILL		22,658
TOTAL AVAIL. NON-ROCK EXCAV.	10,586 x 0.85 = 8,998	
TOTAL WASTE MATERIAL TO BE UTILIZED	850 x 1 = 850	
(4)TOTAL AVAILABLE EXCAVATION	=	9,848
BORROW NEEDED = TOTAL FILL MINUS TOTAL AVAILABLE EXCAVATION		12,810
TOTAL FILL MINUS REQUIRED GRAN. BORR. WITHIN FILL		12,810
COMMON BORROW =	12,810 x 1.15 =	14,731

TranSystems

STATE OF MAINE
DEPARTMENT OF TRANSPORTATION

BH-1510(500)X

WIN 15105.00

BRIDGE NO. 3248

BRIDGE PLANS

STATE OF MAINE
EVAN C. LOWELL
NO. 9065
PROFESSIONAL ENGINEER

6-17-13

PROJ. MANAGER	S. BOOGE	BY	DATE
DESIGN-DETAILED	T. SANDELL	T. SANDELL	05/2013
CHECKED-REVIEWED	D. WILK	E. LOWELL	
DESIGN2-DETAILED2			
DESIGN3-DETAILED3			
REVISIONS 1			
REVISIONS 2			
REVISIONS 3			
REVISIONS 4			
FIELD CHANGES			

SIGNATURE

9065
P.E. NUMBER

6/17/2013
DATE

MARTIN MEMORIAL BRIDGE
ANDROSCOGGIN RIVER
RUMFORD OXFORD COUNTY

ESTIMATED QUANTITIES

SHEET NUMBER
2
OF 95

Filename: ...\Road\002_Estimate_Notes.dgn Division: BRIDGE Username: T SANDELL Date:6/17/2013

GENERAL CONSTRUCTION NOTES

1. All utility facilities shall be adjusted by the respective utilities unless otherwise noted.

2. All joints between existing and proposed hot bituminous pavement shall be butted. Payment shall be made under Item 202.203 Pavement Butt Joint.

3. Construct butt joints at all paved drives and entrances.

4. The clearing limits as shown on the plans are approximate. The exact limits will be established in the field by the Resident. Payment for clearing will be considered incidental to Contract items.

5. Driveway fill side slopes shall be the same as the non-guardrail fill slopes unless otherwise noted on the plans.

6. All waste material not used on the project shall be disposed of off the project in waste areas approved by the Resident.

7. Required ditch protection shown on the plans or in the Construction Notes is for estimating purposes only. The actual type and location of ditch protection may be altered by the Resident.

8. If foundation material is required under culverts, it shall meet the requirements for granular borrow - underwater backfill and will paid for as granular borrow.

9. Granular borrow used to backfill muck excavation or in low wet areas to 1' above water level or old ground shall meet requirements for granular borrow underwater backfill.

10. All embankment material, except as otherwise shown, placed below EL. 612.6 shall be Granular Borrow meeting the requirements of Subsection 703.19, Material for Underwater Backfill.

11. Place riprap on sideslopes up to EL. 626.0.

12. Construct the riprap shelf at EL. 627.6 for Abutment 1, and EL. 622.6 for Abutment 2.

13. Existing inslopes steeper than 2:1 in proposed fill areas shall be benched as directed by the Resident.

14. Residential paved entrances shall be constructed with: 3" hot mix asphalt and 12" aggregate subbase course gravel. All residential paved entrances shall be sealed under Item 612.06 Bituminous Sealing - Black.

15. Commercial paved entrances shall be constructed with: 3" hot mix asphalt and 11" aggregate subbase course gravel. All commercial paved entrances shall be sealed under Item 612.06 Bituminous Sealing - Black.

16. Unpaved entrances shall be constructed with 14" aggregate subbase course gravel or 11" aggregate subbase course gravel and 3" untreated aggregate surface course unless otherwise noted in the plans or directed by the Resident.

17. Crushed stone entrances shall be constructed with 12" aggregate subbase course gravel and 2" crushed stone surface unless otherwise noted in the plans or directed by the Resident.

18. A 3' paved lip shall be placed at all gravel entrances unless otherwise noted in the plans or directed by the Resident.

19. All paved walks to be constructed with 12" aggregate subbase course-gravel and 2" hot mix asphalt unless otherwise noted in the plans or directed by the Resident.

20. Place 12 inches gravel and 2 inches hot mix asphalt around catch basins in grassed areas (3' outside of frame) and paint with Acrylic Latex Color Finish - Green. Payment shall be under the applicable contract items.

21. Do not excavate for Aggregate Subbase Course where existing material is suitable as determined by the Resident.

22. In areas where the Resident directs the Contractor not to excavate to the subgrade line shown on the plans, payment for removing existing pavement, grubbing, shaping, ditching and compacting the existing subbase and layers of new subbase 6 inches or less thick will be made under appropriate equipment rental items.

23. Any necessary cleaning of existing pavement prior to paving shall be incidental to the related paving items.

24. All existing paved shoulders and widenings to be resurfaced as directed by the Resident.

25. When super elevation exceeds the slope of the low side shoulder, the shoulder pavement will have same slope as traveled way.

26. The following shall be incidental to the 603 Item(s):
    - Any cutting of existing culverts and or connectors necessary to install new culvert replacements or extensions
    - All pipe excavation including any cutting and removal of pavement
    - All ditching at pipe ends
    - Furnishing, placing, grading, and compacting of any new gravel and/or fill material including Granular Borrow used under pipes and for temporary detours to maintain traffic during pipe installation (excavation is also incidental)
    - Granular Borrow under the pipe shall meet the requirements for Underwater Backfill
    - All work necessary to connect to existing pipes and drainage structures
    - Flow lines may be changed by 1.5 ft
    - Any necessary clearing of brush and non-pay trees at culvert ends

27. Existing culverts and catch basins will be cleaned as directed by the Resident under the appropriate pay items.

28. No existing drainage shall be abandoned, removed or plugged without prior approval of the Resident.

29. Inlets and outlets of all culverts shall be armored with stone ditch protection unless otherwise noted on the plans or directed by the Resident.

30. The culvert sizes shown on the plans and cross sections are for smoothlined pipes. For comparable corrugated sizes see the drainage tabulation.

31. Any necessary cutting of existing pipes to fit in areas of proposed catch basins will not be paid for separately and will be considered incidental to Item 604.

32. Any necessary cutting of existing catch basins to allow for proposed pipe connections will not be paid for separately and will be considered incidental to Item 603.

33. All cross road culverts shall be Class III Reinforced Concrete Pipe.

34. Existing abandoned water mains broken by the Contractor during construction shall have the ends plugged with brick and mortar. Cost for all labor and material will be considered incidental to the contract and no direct payment will be made.

35. Two Reflectorized Flexible G.R. Markers (Item 606.353) will be installed at each guardrail end.

36. Loam has been estimated for disturbed lawn areas. Actual placement of the loam shall be as noted on the plans or designated by the Resident.

37. Unless otherwise noted Seeding Method No. 1 shall be utilized on all lawns and developed areas; Seeding Method No. 2 shall be utilized on all non-guardrail slopes. Seeding Method No. 3 shall be utilized on all guardrail fill slopes. On long non-guardrail backslopes, Seeding Method No. 3 may be used instead of Method No. 2 if noted or directed by the Resident.

38. Loam shall be placed to a nominal depth of 4 inches in lawn areas and 2 inches in all other areas unless otherwise noted or directed.

39. Erosion Control Mix may be substituted in those areas normally receiving loam and seed as directed by the Resident. Placement shall be in accordance with Standard Specifications Section 619, Mulch. Payment will be made under Item No. 619.1401, Erosion Control Mix.

40. Place a 24-in. wide strip of Temporary Erosion Control Blanket on the sideslopes along the top of the riprap and behind the wingwalls.

41. An NCHRP350 compliant guardrail end treatment shall be installed concurrently with the placement of each section of beam guardrail.

42. Extended-use Erosion Control Blanket, seeded gutters, riprap downspouts, and other gutters lined with Stone Ditch Protection shall be constructed after paving and shoulder work is completed, where it is apparent that runoff will cause continual erosion. Payment will be made under the appropriate Contract items.

43. Protective Coating for Concrete Surfaces shall be applied to the following areas:
    - All exposed surfaces of concrete curbs and sidewalks
    - Fascias down to the drip notch
    - All exposed surfaces of Concrete Transition Barriers
    - Top of abutment backwalls and to one foot below the top of backwalls on the back side

44. Any base pavement not surfaced before winter will require temporary pavement markings of paint, both yellow centerline and white edge lines and will be considered part of Item 627.78

45. The Contractor will be responsible for maintaining all existing mailboxes to ensure that the mail will be deliverable. No separate payment will be made for this work; it shall be considered incidental to the contract.

46. The Contractor is responsible for the careful side staking of existing centerline as per Standard Specification 105.6.2. Side stakes shall be placed safely outside of the construction limits and the existing centerline grades shall be transferred to these stakes. These stakes and grades will be used to layout centerline and determine new construction finish grades from differential elevation sheets furnished by MaineDOT. All layout, stakes, and grades will be checked and must be acceptable to the Resident.

47. Any damage to the slopes caused by the Contractor's equipment, personnel, or operation shall be repaired to the satisfaction of the resident. All work, equipment, and materials required to make repairs shall be at the Contractor's expense.

48. Areas requiring fill on the project will come from suitable excavation from excavation areas.

49. Estimated quantities for required structural earth excavation, drainage and minor structures are informational only and represent the approximate minimum quantity required to install drainage structures. Additional excavation for the Contractor's convenience or to comply with backsloping requirements will not be paid for directly but will be considered incidental to the related drainage items.

50. No separate payment for superintendent or foreman will be made for the supervision of equipment being paid for under the equipment rental items.

51. "Undetermined Locations" shall be determined by the Resident.

52. Stations referenced are approximate.

53. All work shall be done in accordance with the Maine Department of Transportation's Best Management Practices for Erosion Control & Sediment Control, February, 2008.

54. Project information referred to below may be accessed at the following MaineDOT web address:
http://www.maine.gov/mdot/contractors/

55. The existing bridge plans may be accessed at the MaineDOT web address. The plans are reproductions of the original drawings as prepared for the construction of the bridge. It is very unlikely that the plans will show any construction field changes or any alterations which may have been made to the bridge during its life span.

56. The hydrologic report of the bridge site may be accessed at the MaineDOT web address. The hydrologic report is based on MaineDOT's interpretation of the information obtained for the subject site. No assurance is given that the information or the conclusions of the report will be representative of actual conditions at the time of construction.

57. The project geotechnical report titled: Geotechnical Design Report, Replacement of Martin Memorial Bridge, Maine DOT WIN 15105.00, Route 232 - Rumford, Maine, Soils Report No. 2013-06C, dated March 2013 may be accessed at the MaineDOT web address.

58. Geotechnical information furnished or referred to in this plan set is for the use of the Bidders and the Contractor. No assurance is given that the information or interpretations will be representative of actual subsurface conditions at the construction site. MaineDOT will not be responsible for the Bidder's or Contractor's interpretations of, or conclusions drawn from, the geotechnical information. The boring logs contained in the plan set present factual and interpretive subsurface information collected at discrete locations. Data provided may not be representative of the subsurface conditions between the boring locations.

59. Quantities included for pay items measured and paid for by Lump Sum are estimated quantities and are provided by MaineDOT for informational purposes only. Lump Sum pay items will be paid for at the Contract Bid amount, with no addition or reduction in payment to the Contractor if the actual final quantities are different from the MaineDOT provided estimated quantites except as follows:
    a. If a Lump Sum pay item is eliminated, the requirements of Standard Specifications Section 109.2, Elimination of Items, will take precendence.
    b. If other Contract Documents specifically allow a change in payment for a Lump Sum pay item, those requirements will be followed.
    c. If a design change results in changes to estimated quantities for Lump Sum pay items, price adjustments will be made in accordance with Standard Specifications Section 109.7, Equitable Adjustements to Compensation.

60. The Contractor shall submit a Bridge Demolition Plan to the Resident at least 10 business days prior to the start of demolition work. The plan shall outline the methods and equipment to be used to remove and dispose of all materials included in the existing bridge. No work related to the removal of the bridge shall be undertaken by the Contractor until MaineDOT has reviewed the Bridge Demolition Plan for appropriateness and completeness. Payment for all work necessary for developing, submitting and finalizing the Bridge Demolition Plan will be considered incidental to the bridge removal pay item.

61. The existing bridge shall be removed by and become the property of the Contractor. The steel portions of the existing bridge are coated with a lead-based paint system. The Contractor is responsible for the containment, proper management and disposal of all lead-contaminated hazardous waste generated by the process of demolishing the bridge. The Contractor is responsible for implementing appropriate OSHA mandated personal protection standards related to this process. Once the existing bridge is removed, the Contractor is solely responsible for the care, custody and control of the components of the existing bridge and any hazardous waste generated as a result of the storage recycling or disposal of the bridge components, including lead-coated steel. The Contractor shall recycle or reuse the steel in accordance with the Maine Department of Environmental Protection's "Maine Hazardous Waste Management Regulations," Chapter 850. A copy of this regulation is available at MaineDOT's offices on Child Street in Augusta. Payment for all labor, materials, equipment and other costs required to remove and dispose of the existing bridge will be considered incidental to the bridge removal pay item.

62. The Contractor shall be responsible for all damage resulting from the failure of earth support system(s). Repairs required as a result of earth support system(s) failure shall be performed at no additional cost to the Department.

TranSystems

STATE OF MAINE
DEPARTMENT OF TRANSPORTATION

BH-1510(500)X

WIN 15105.00

BRIDGE NO. 3248

BRIDGE PLANS

STATE OF MAINE
EVAN C. LOWELL
NO. 9065
PROFESSIONAL ENGINEER

PROJ. MANAGER	S. BOOGE	BY	DATE
DESIGN-DETAILED	T. SANDELL	T. SANDELL	05/2013
CHECKED-REVIEWED	D. WILK	E. LOWELL	
DESIGN2-DETAILED2			
DESIGN3-DETAILED3			
REVISIONS 1			
REVISIONS 2			
REVISIONS 3			
REVISIONS 4			
FIELD CHANGES			

SIGNATURE
9065
P.E. NUMBER
6/17/2013
DATE

MARTIN MEMORIAL BRIDGE
ANDROSCOGGIN RIVER
RUMFORD OXFORD COUNTY

GENERAL NOTES

SHEET NUMBER
3
OF 95

Filename: ...\Road\003_GeneralNotes.dgn Division: BRIDGE Username: T SANDELL Date:6/17/2013

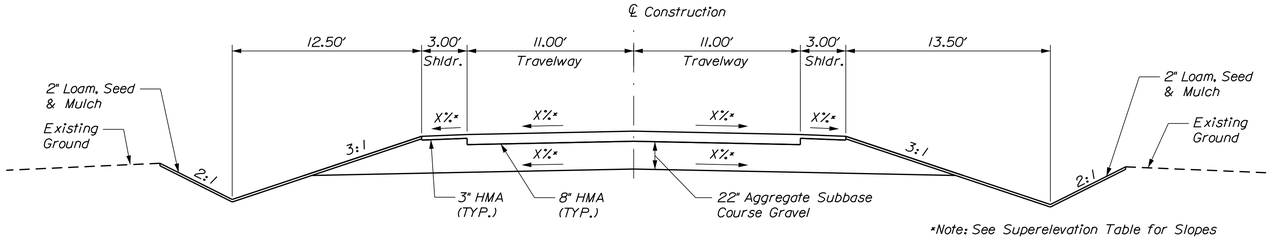

PROPOSED ROUTE 232 TYPICAL SECTION

Sta. 0+00.00 to Sta. 10+00.00

AGGREGATE SUBBASE COURSE GRAVEL		
LEFT SHOULDER 55.21 CY/100 LF	22 FT TRAVEL LANES 149.38 CY/100 LF	RIGHT SHOULDER 55.21 CY/100 LF
STATION TO STATION	STATION TO STATION	STATION TO STATION
0+00 to 10+00	0+00 to 10+00	0+00 to 10+00

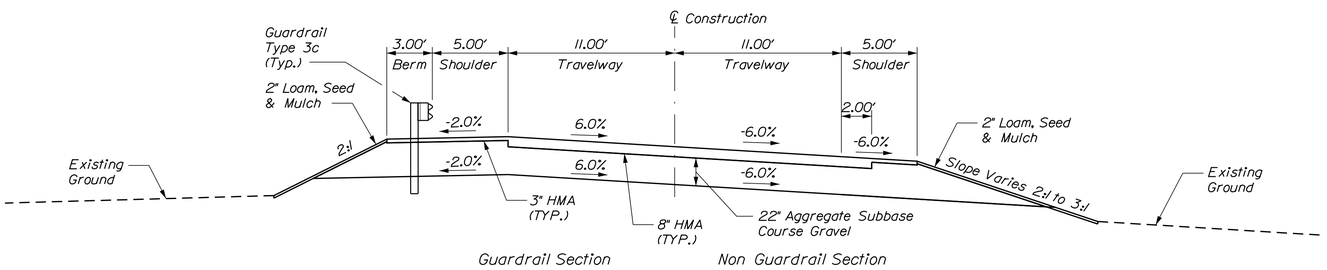

PROPOSED ROUTE 232 TYPICAL SECTION

Sta. 10+50.00 to Bridge

AGGREGATE SUBBASE COURSE GRAVEL		
LEFT SHOULDER 87.67 CY/100 LF	22 FT TRAVEL LANES 149.38 CY/100 LF	RIGHT SHOULDER 61.49 CY/100 LF
STATION TO STATION	STATION TO STATION	STATION TO STATION
11+74.67 to Bridge	10+00 to Bridge	11+43.38 to Bridge

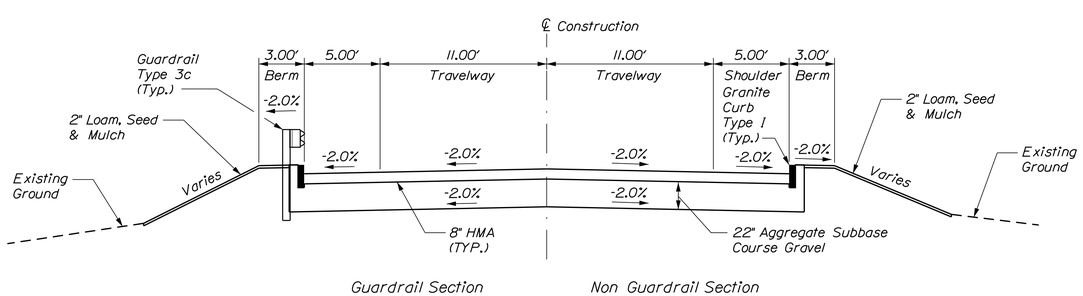

PROPOSED ROUTE 232 TYPICAL SECTION

Bridge to Sta. 20+25.00

AGGREGATE SUBBASE COURSE GRAVEL
22 FT TRAVEL LANES 149.38 CY/100 LF
STATION TO STATION
Bridge to 20+82

NOTES:

1. THE PAVEMENT, BASE AND SUBBASE DEPTHS AS SHOWN ON THE PLANS ARE INTENDED TO BE NOMINAL.
2. WHEN SUPERELEVATION EXCEEDS THE SLOPE OF THE LOW SIDE SHOULDER, THE LOW SIDE SHOULDER SHALL HAVE THE SAME SLOPE AS THE TRAVELWAY.
3. CROWNS FOR BOTH NORMAL AND SUPERELEVATION SECTIONS FOR ALL COURSES OF SUBBASE AND PAVEMENT SHALL BE STRAIGHT.
4. THE GRAVEL QUANTITY CALCULATION IS BASED ON A 2" LOAM OR DIRTY BORROW DEPTH. THE ACTUAL DEPTH MAY VARY. SEE THE GENERAL NOTES.
5. THE ALGEBRAIC DIFFERENCE BETWEEN THE SHOULDER AND TRAVELWAY CROSS SLOPES "ROLLOVER" SHALL NOT EXCEED 8.0%.
6. THE STATIONING SHOWN UNDER EACH TYPICAL SECTION IS APPROXIMATE.

SUPERELEVATION TABLE

LT SHOULDER	LT TRAVELWAY	STATION	RT TRAVELWAY	RT SHOULDER
		START		
-4.0	-2.0	0+50	-4.0	-4.0
-4.0	-2.0	1+00	-2.0	-4.0
-4.0	-2.0	1+50	0	-4.0
-4.0	-2.0	2+00	2.0	-4.0
-4.0	-4.0	2+50	4.0	-4.0
-6.0	-6.0	3+00	6.0	-2.0
		TO		
-6.0	-6.0	4+50	6.0	-2.0
-4.0	-4.0	5+00	4.0	-4.0
-4.0	-2.0	5+50	2.0	-4.0
-4.0	-2.0	6+00	0	-4.0
-4.0	-2.0	6+50	-2.0	-4.0
		TO		
-4.0	-2.0	8+00	-2.0	-4.0
-4.0	0	8+50	-2.0	-4.0
-4.0	2.0	9+00	-2.0	-4.0
-4.0	4.0	9+50	-4.0	-4.0
-2.0	6.0	10+00	-6.0	-6.0
		TO		
-2.0	6.0	14+30	-6.0	-6.0
-2.0	6.0	14+50	-6.0	-6.0
-2.0	4.0	15+00	-4.0	-4.0
-2.0	2.0	15+50	-2.0	-2.0
-2.0	0	16+00	-2.0	-2.0
-2.0	-2.0	16+50	-2.0	-2.0
		END		

SUBGRADE IMPROVEMENT

SUBGRADE IMPROVEMENT WILL BE USED AT THE LOCATION INDICATED FOR SOILS THAT ARE UNSTABLE OR UNSUITABLE. SOIL WITHIN THE LIMITS DEFINED BELOW SHALL BE REPLACED WITH METHODICALLY-PLACED AND COMPACTED GRANULAR BORROW.

PROPOSED ROUTE 232

STATION	OFFSET		DEPTH	LENGTH	WIDTH	VOLUME
3+83	14' LT	14' RT	0'	50'	28'	78 CY
4+33	14' LT	14' RT	3'	222'	28'	691 CY
6+55	14' LT	14' RT	3'			
7+05	14' LT	14' RT	0'	50'	28'	78 CY

TranSystems

STATE OF MAINE
DEPARTMENT OF TRANSPORTATION
BH-1510(500)X
WIN 15105.00
BRIDGE NO. 3248
BRIDGE PLANS

STATE OF MAINE EVAN C. LOWELL NO. 9065 PROFESSIONAL ENGINEER
6-17-13

SIGNATURE			
9065			
P.E. NUMBER			
6/17/2013			
DATE			
PROJ. MANAGER	S. BOOGE		
DESIGN-DETAILED	T. SANDELL	T. SANDELL	05/2013
CHECKED-REVIEWED	D. WILK	E. LOWELL	
DESIGN2-DETAILED2			
DESIGN3-DETAILED3			
REVISIONS 1			
REVISIONS 2			
REVISIONS 3			
REVISIONS 4			
FIELD CHANGES			

MARTIN MEMORIAL BRIDGE
ANDROSCOGGIN RIVER
RUMFORD OXFORD COUNTY

TYPICAL SECTIONS

SHEET NUMBER
4
OF 95

Filename: ...\0030\Road\004_Typicals.dgn Division: BRIDGE Username: T SANDELL Date:6/17/2013

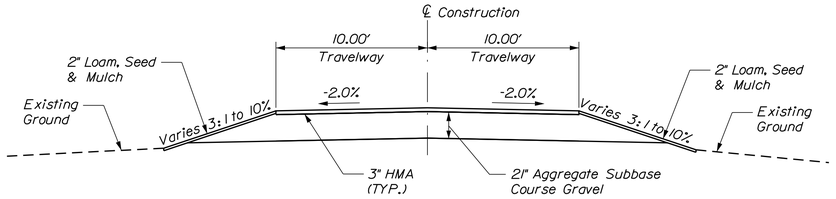

OLD ROUTE 232 TYPICAL SECTION

Sta. 30+35.00 to Sta. 32+30.00

AGGREGATE SUBBASE COURSE GRAVEL
20 FT TRAVEL LANES 169.36 CY/100 LF
STATION TO STATION
30+40.93 to 32+41.96

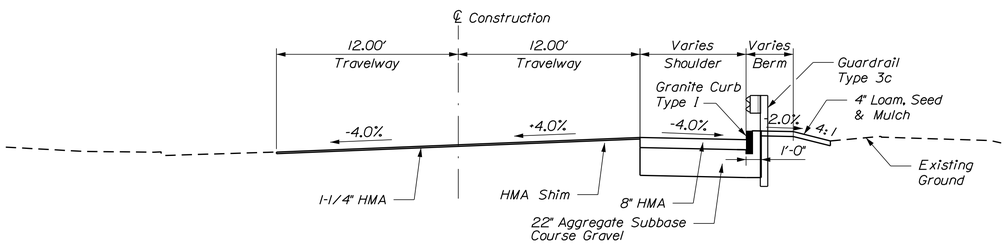

ROUTE 2 TYPICAL SECTION

Sta. 50+81.89 to Sta. 52+62.83

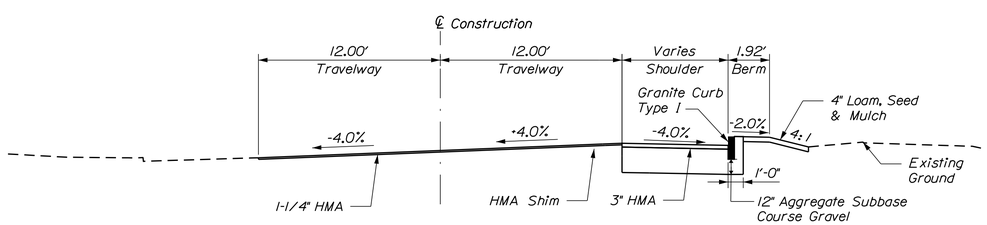

ROUTE 2 TYPICAL SECTION

Sta. 52+78.79 to Sta. 55+80.48

NOTES:

1. THE PAVEMENT, BASE AND SUBBASE DEPTHS AS SHOWN ON THE PLANS ARE INTENDED TO BE NOMINAL.
2. WHEN SUPERELEVATION EXCEEDS THE SLOPE OF THE LOW SIDE SHOULDER, THE LOW SIDE SHOULDER SHALL HAVE THE SAME SLOPE AS THE TRAVELWAY.
3. CROWNS FOR BOTH NORMAL AND SUPERELEVATION SECTIONS FOR ALL COURSES OF SUBBASE AND PAVEMENT SHALL BE STRAIGHT.
4. THE GRAVEL QUANTITY CALCULATION IS BASED ON A 2" LOAM OR DIRTY BORROW DEPTH. THE ACTUAL DEPTH MAY VARY. SEE THE GENERAL NOTES.
5. THE ALGEBRAIC DIFFERENCE BETWEEN THE SHOULDER AND TRAVELWAY CROSS SLOPES "ROLLOVER" SHALL NOT EXCEED 8.0%.
6. THE STATIONING SHOWN UNDER EACH TYPICAL SECTION IS APPROXIMATE.

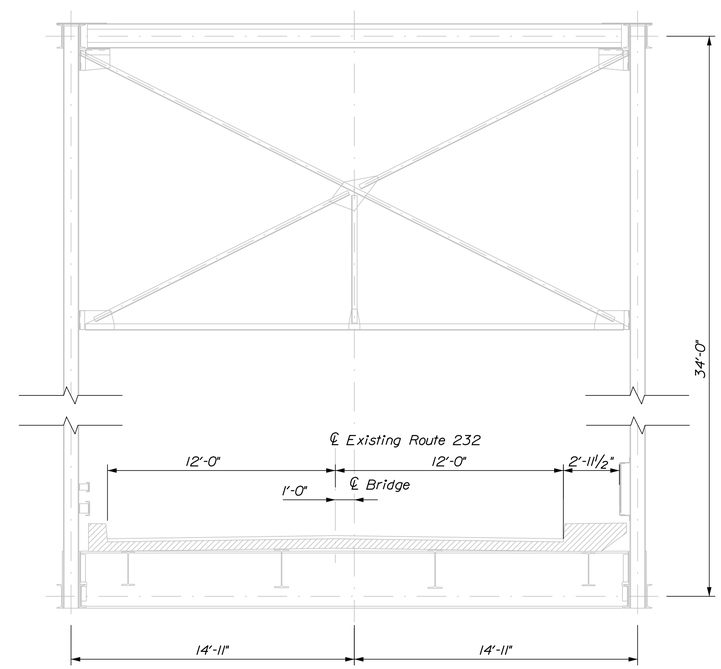

EXISTING BRIDGE SECTION

STATE OF MAINE
DEPARTMENT OF TRANSPORTATION

BH-1510(500)X

WIN 15105.00

BRIDGE NO. 3248

BRIDGE PLANS

STATE OF MAINE EVAN C. LOWELL NO. 9065 PROFESSIONAL ENGINEER

PROJ. MANAGER	S. BOOGE	BY	DATE
DESIGN-DETAILED	T. SANDELL	T. SANDELL	05/2013
CHECKED-REVIEWED	D. WILK	E. LOWELL	
DESIGN2-DETAILED2			
DESIGN3-DETAILED3			
REVISIONS 1			
REVISIONS 2			
REVISIONS 3			
REVISIONS 4			
FIELD CHANGES			

SIGNATURE

9065
P.E. NUMBER

6/17/2013
DATE

MARTIN MEMORIAL BRIDGE
ANDROSCOGGIN RIVER
RUMFORD OXFORD COUNTY

TYPICAL SECTIONS

SHEET NUMBER

5

OF 95

TranSystems

Filename: ...\0030\Road\005_Typicals.dgn Division: BRIDGE Username: T SANDELL Date:6/17/2013

STATION	CULVERT PIPE											CATCH BASIN					PIPE ARCH				MH	UNDERDRAIN						ELBOWS, TEES, WYES AND INLET GRATE UNITS	REMARKS
	RCP			CMP		OPTION I		OPTION III														TYPE B		TYPE C					
								SMOOTHLINED		CORRUGATED										GAGE OR WALL THICKNESS		TYPE B	OUTLET	SMOOTHLINED		CORRUGATED		DESCRIPTIONS	
	SIZE	LENGTH	CLASS	SIZE	LENGTH	SIZE	LENGTH	SIZE	LENGTH	SIZE	LENGTH	A1-C	B1-C		E	F	SPAN	RISE	LENGTH			LENGTH	LENGTH	SIZE	LENGTH	SIZE	LENGTH		
ROADWAY CULVERTS																													
NEW ROUTE 232																													
STA 7+50								30"	54'	36"	54'																		2 CULVERTS SIDE BY SIDE
STA 11+86 LT to STA 11+36 RT								54"	132'																				CROSS ROAD CULVERT TO BE CLASS III RCP
STA 14+62 LT to STA 14+62 RT								54"	124'																				CROSS ROAD CULVERT TO BE CLASS III RCP
OLD ROUTE 232																													
STA 30+19 LT to STA 30+77 LT								12"	60'																				
STA 30+77 LT to STA 30+96 RT								12"	64'																				
DRIVEWAY CULVERTS																													
NEW ROUTE 232																													
STA 0+75 LT						15"	28'																						
STA 8+50 RT						24"	26'																						
CATCH BASINS																													
ROUTE 2																													
STA 54+78.21, 19.18' RT																													ADJUST TO GRADE
STA 55+45.92, 18.43' RT												1																	FLAT TOP
OLD ROUTE 232																													
STA 30+76.66, 18.02' LT															1														30"
STA 30+95.79, 43.06' RT																													CLEAN AND REBUILD

TranSystems

STATE OF MAINE
DEPARTMENT OF TRANSPORTATION

BH-1510(500)X

WIN 15105.00

BRIDGE NO. 3248

BRIDGE PLANS

STATE OF MAINE
EVAN C. LOWELL
NO. 9065
PROFESSIONAL ENGINEER
6-17-13

PROJ. MANAGER	S. BIDGE		
DESIGN-DETAILED	T. SANDELL	BY	DATE
CHECKED-REVIEWED	D. WILK	E. LOWELL	05/2013
DESIGN2-DETAILED2			
DESIGN3-DETAILED3			
REVISIONS 1			
REVISIONS 2			
REVISIONS 3			
REVISIONS 4			
FIELD CHANGES			

SIGNATURE
9065
P.E. NUMBER
6/17/2013
DATE

RUMFORD
MARTIN MEMORIAL BRIDGE

DRAINAGE SHEET

SHEET NUMBER
6
OF 95

Filename: ...\Road\006_Drainage Sheet.dgn Division: BRIDGE Username: T SANDELL Date:6/17/2013

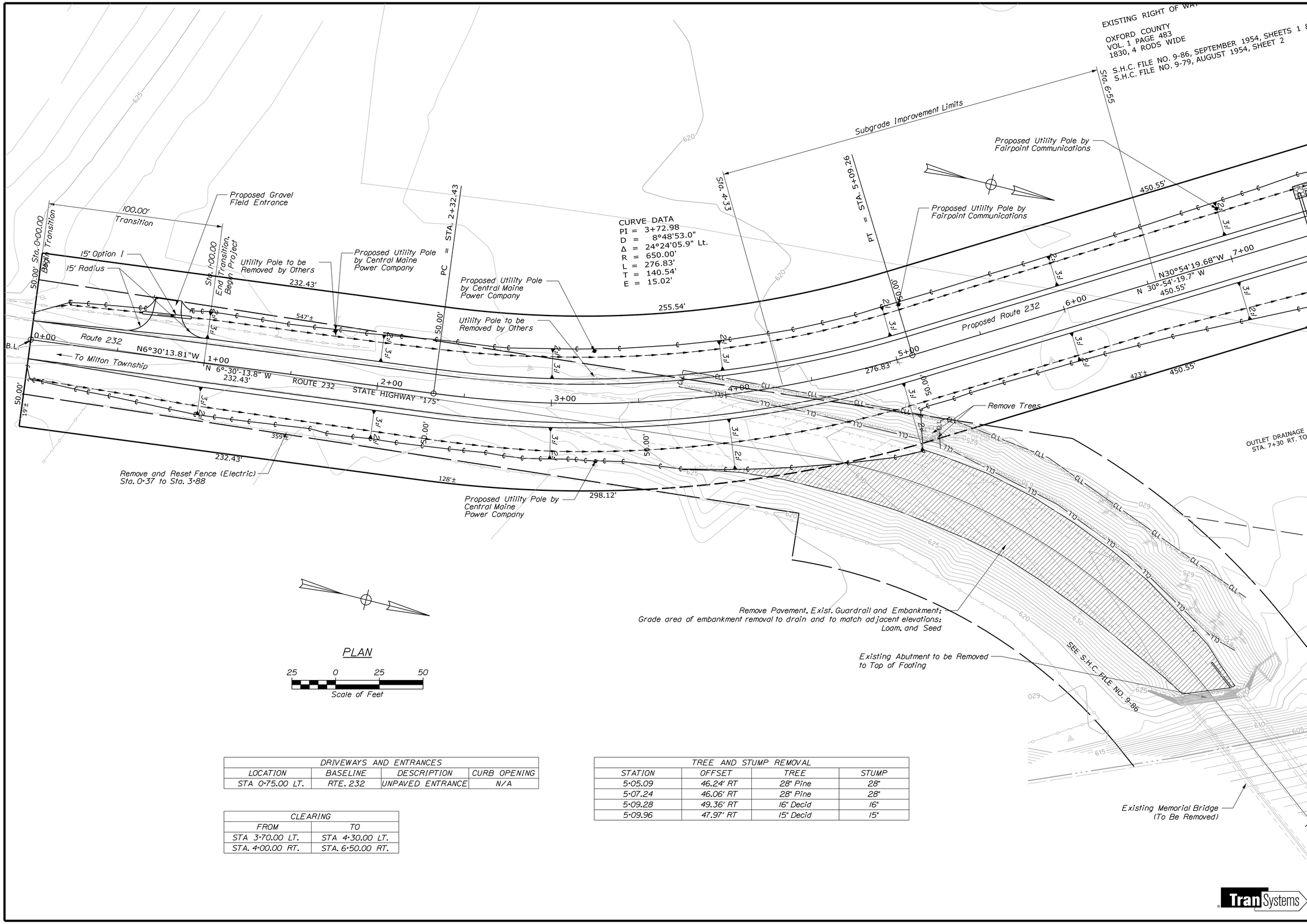

DRIVEWAYS AND ENTRANCES			
LOCATION	BASELINE	DESCRIPTION	CURB OPENING
STA 0+75.00 LT.	RTE. 232	UNPAVED ENTRANCE	N/A

CLEARING	
FROM	TO
STA 3+70.00 LT.	STA 4+30.00 LT.
STA. 4+00.00 RT.	STA. 6+50.00 RT.

TREE AND STUMP REMOVAL			
STATION	OFFSET	TREE	STUMP
5+05.09	46.24' RT	28" Pine	28"
5+07.24	46.06' RT	28" Pine	28"
5+09.28	49.36' RT	16" Decid	16"
5+09.96	47.97' RT	15" Decid	15"

STATE OF MAINE
DEPARTMENT OF TRANSPORTATION

BH-1510(500)X

WIN 15105.00

BRIDGE NO. 3248

BRIDGE PLANS

STATE OF MAINE EVAN C. LOWELL NO. 9065 PROFESSIONAL ENGINEER

PROJ. MANAGER	S. BODGE	BY	DATE
DESIGN-DETAILED	T. SANDELL	T. SANDELL	05/2013
CHECKED-REVIEWED	D. WILK	E. LOWELL	
DESIGN2-DETAILED2			
DESIGN3-DETAILED3			
REVISIONS 1			
REVISIONS 2			
REVISIONS 3			
REVISIONS 4			
FIELD CHANGES			

SIGNATURE
9065
P.E. NUMBER
6/17/2013
DATE

MARTIN MEMORIAL BRIDGE
ANDROSCOGGIN RIVER
RUMFORD OXFORD COUNTY

GENERAL PLAN

SHEET NUMBER
7
OF 95

TranSystems

Filename: G:\B012\0030\Road\007_PLAN.dgn Division: BRIDGE Username: T SANDELL Date:6/17/2013

Drainage Channel
Typical Section

CLEARING	
FROM	TO
STA 15+45.00 LT.	STA 16+00.00 LT.
STA. 15+40.00 RT.	STA. 15+55.00 RT.

DRIVEWAYS AND ENTRANCES			
LOCATION	BASELINE	DESCRIPTION	CURB OPENING
STA 8+50.00 RT	RTE. 232	UNPAVED ENTRANCE	N/A

TREE AND STUMP REMOVAL			
STATION	OFFSET	TREE	STUMP
15+52.96	71.04' RT	20" Oak	20"
15+59.48	35.56' RT	15" Decid	15"
15+75.10	18.29' LT	32" Oak	32"
15+71.14	3.65' LT		11"

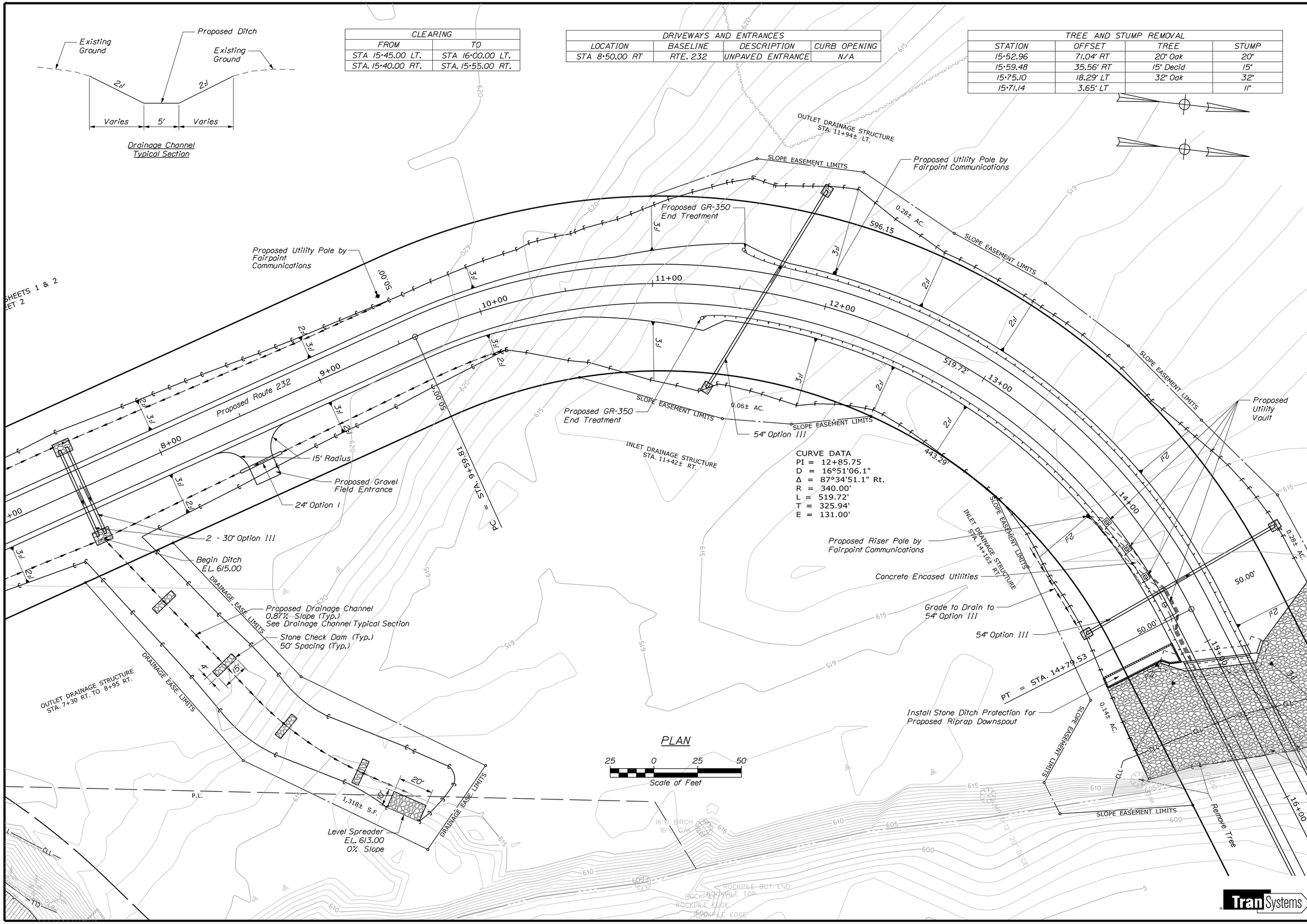

STATE OF MAINE
DEPARTMENT OF TRANSPORTATION

BH-1510(500)X

WIN 15105.00

BRIDGE NO. 3248

BRIDGE PLANS

STATE OF MAINE
EVAN C. LOWELL
NO. 9065
PROFESSIONAL ENGINEER
6-17-13

PROJ. MANAGER	S. BOOGE	BY	DATE
DESIGN-DETAILED	T. SANDELL	T. SANDELL	05/2013
CHECKED-REVIEWED	D. WILK	E. LOWELL	
DESIGN2-DETAILED2			
DESIGN3-DETAILED3			
REVISIONS 1			
REVISIONS 2			
REVISIONS 3			
REVISIONS 4			
FIELD CHANGES			

SIGNATURE
9065
P.E. NUMBER
6/17/2103
DATE

MARTIN MEMORIAL BRIDGE
ANDROSCOGGIN RIVER
RUMFORD OXFORD COUNTY

GENERAL PLAN

SHEET NUMBER
8
OF 95

TranSystems

Filename: G:\B012\0030\Road\008_PLAN.dgn Division: BRIDGE Username: T SANDELL Date:6/17/2013

TREE AND STUMP REMOVAL			
STATION	OFFSET	TREE	STUMP
15+52.96	71.04' RT	20" Oak	20"
15+59.48	35.56' RT	15" Decid	15"
15+75.10	18.29' LT	32" Oak	32"
15+71.14	3.65' LT		11"
19+71.50	52.72' RT	3-14"to16" Maples	3-14"to16"
19+78.28	26.20' RT	7-8"to16" Maples	7-8"to16"
19+83.76	46.72' RT	18" Ash	18"
19+98.43	19.15' RT	6-14"to18" Maples	6-14"to18"
20+11.96	47.97' LT	12" Maple	12"
20+12.72	51.59' LT	16" Maple	16"
20+23.81	43.69' LT	32" Oak	32"
20+25.17	41.52' RT	12" Maple	12"
20+29.77	64.20' RT	3-10"to14" Maples	3-10"to14"
20+32.11	34.21' LT	15" Maple	15"
20+36.69	32.54' LT	12" Maple	12"
20+41.39	68.29' LT	12" Maple	12"
20+47.67	33.36' LT	15" Maple	15"

DRIVEWAYS AND ENTRANCES			
LOCATION	BASELINE	DESCRIPTION	CURB OPENING
STA. 52+62.83 RT.	RTE. 2	UNPAVED ENTRANCE	20.1'

CLEARING	
FROM	TO
STA 19+75.00 LT.	STA 20+80.00 LT.
STA. 19+10.00 RT.	STA. 20+80.00 RT.

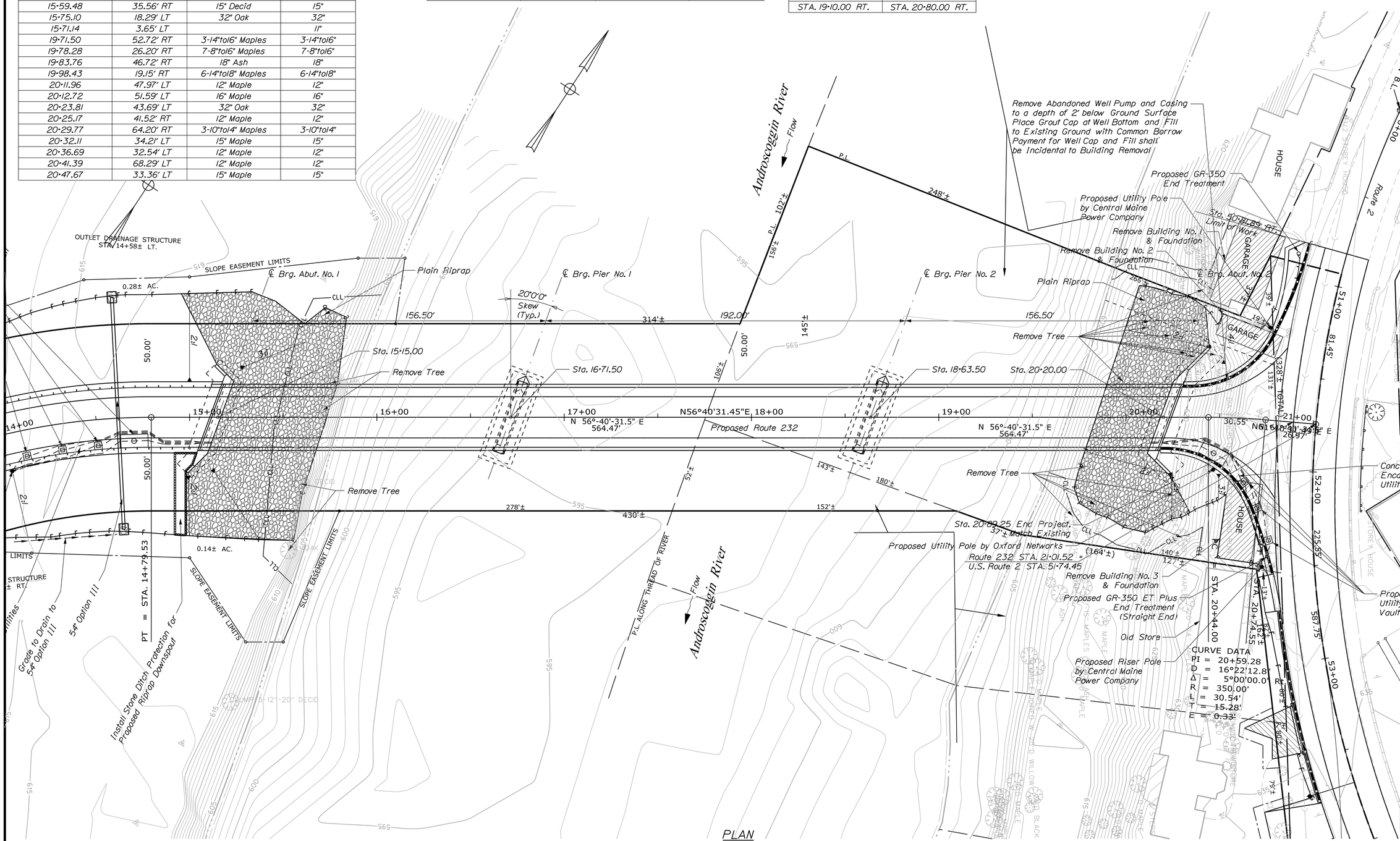

STATE OF MAINE
DEPARTMENT OF TRANSPORTATION

BH-1510(500)X

WIN 15105.00

BRIDGE NO. 3248

BRIDGE PLANS

STATE OF MAINE
EVAN C. LOWELL
NO. 9065
PROFESSIONAL ENGINEER

PROJ. MANAGER	S. BODGE	
DESIGN-DETAILED	T. SANDELL	T. SANDELL
CHECKED-REVIEWED	D. WILK	E. LOWELL
DESIGN2-DETAILED2		
DESIGN3-DETAILED3		
REVISIONS 1		
REVISIONS 2		
REVISIONS 3		
REVISIONS 4		
FIELD CHANGES		

	DATE
SIGNATURE	
9065	
P.E. NUMBER	
6/17/2013	
DATE	

MARTIN MEMORIAL BRIDGE
ANDROSCOGGIN RIVER
RUMFORD OXFORD COUNTY

GENERAL PLAN

SHEET NUMBER

9

OF 95

TranSystems

Filename: G:\B012\0030\Road\009_PLAN.dgn Division: BRIDGE Username: T SANDELL Date:6/17/2013

DRIVEWAYS AND ENTRANCES			
LOCATION	BASELINE	DESCRIPTION	CURB OPENING
STA. 53+78.00 RT.	RTE. 2	PAVED ENTRANCE	20.0'
STA 31+00.00 LT.	OLD RTE. 232	PAVED ENTRANCE	N/A
STA. 31+33.00 RT.	OLD RTE. 232	PAVED ENTRANCE	N/A
STA 31+75.00 LT.	OLD RTE. 232	PAVED ENTRANCE	N/A

TREE AND STUMP REMOVAL			
STATION	OFFSET	TREE	STUMP
53+80.56	44.29' RT	29" Maple	29"

CLEARING	
FROM	TO
STA. 50+82.00 RT.	STA. 52+50.00 RT.
STA. 54+40.00 RT.	STA. 55+00.00 RT.

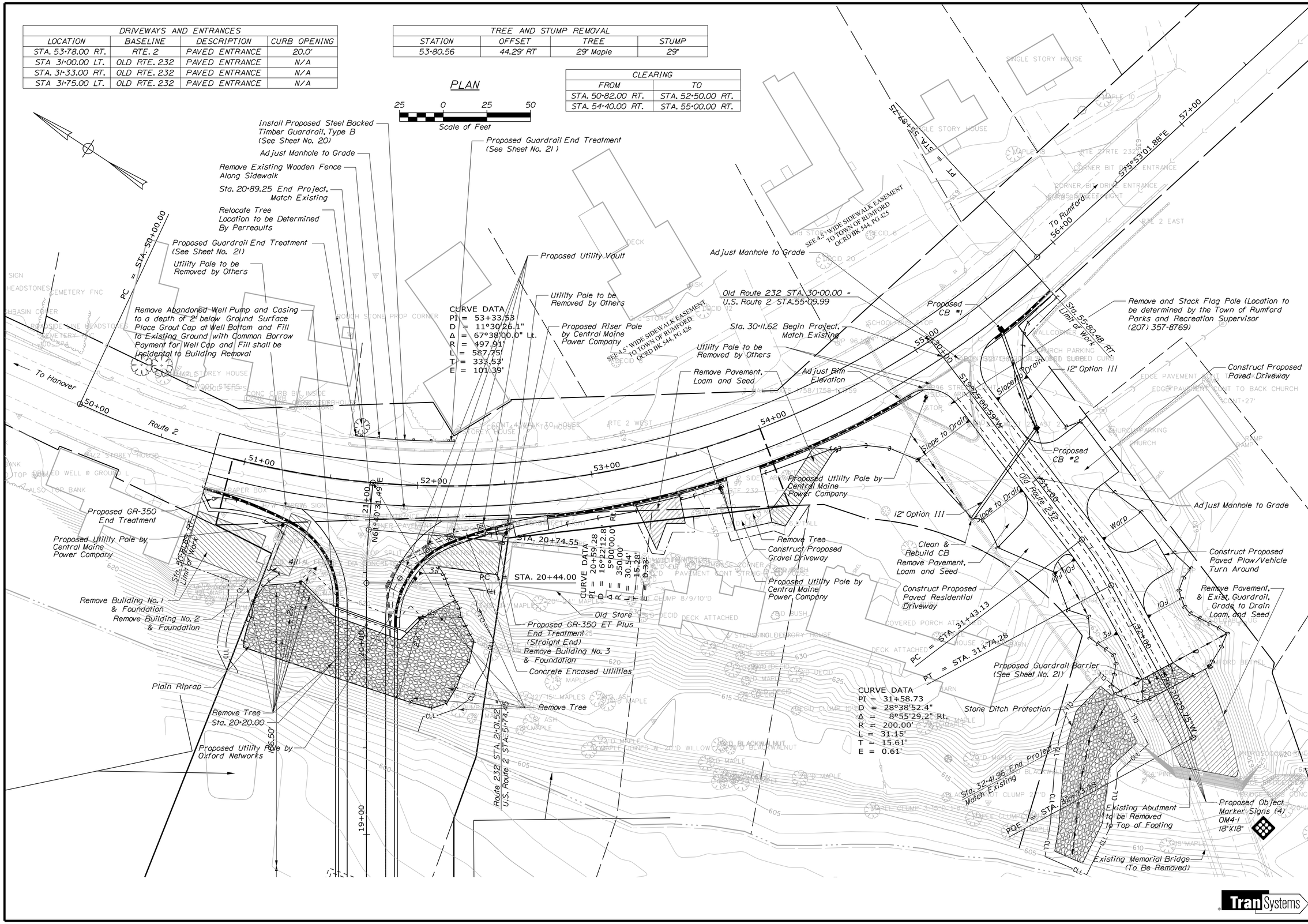

STATE OF MAINE
DEPARTMENT OF TRANSPORTATION

BH-1510(500)X

WIN 15105.00

BRIDGE NO. 3248

BRIDGE PLANS

STATE OF MAINE EVAN C. LOWELL NO. 9065 PROFESSIONAL ENGINEER 6-17-13

PROJ. MANAGER	S. BOOGE	BY	DATE
DESIGN-DETAILED	T. SANDELL	T. SANDELL	05/2013
CHECKED-REVIEWED	T. SANDELL	D. WILK	E. LOWELL
DESIGN2-DETAILED2	D. WILK		
DESIGN3-DETAILED3	E. LOWELL		
REVISIONS 1			
REVISIONS 2			
REVISIONS 3			
REVISIONS 4			
FIELD CHANGES			

SIGNATURE
9065
P.E. NUMBER
6/17/2013
DATE

MARTIN MEMORIAL BRIDGE
ANDROSCOGGIN RIVER
RUMFORD OXFORD COUNTY

GENERAL PLAN

SHEET NUMBER
10
OF 95

Filename: G:\B012\0030\Road\010_PLAN.dgn Division: BRIDGE Username: T SANDELL Date:6/17/2013

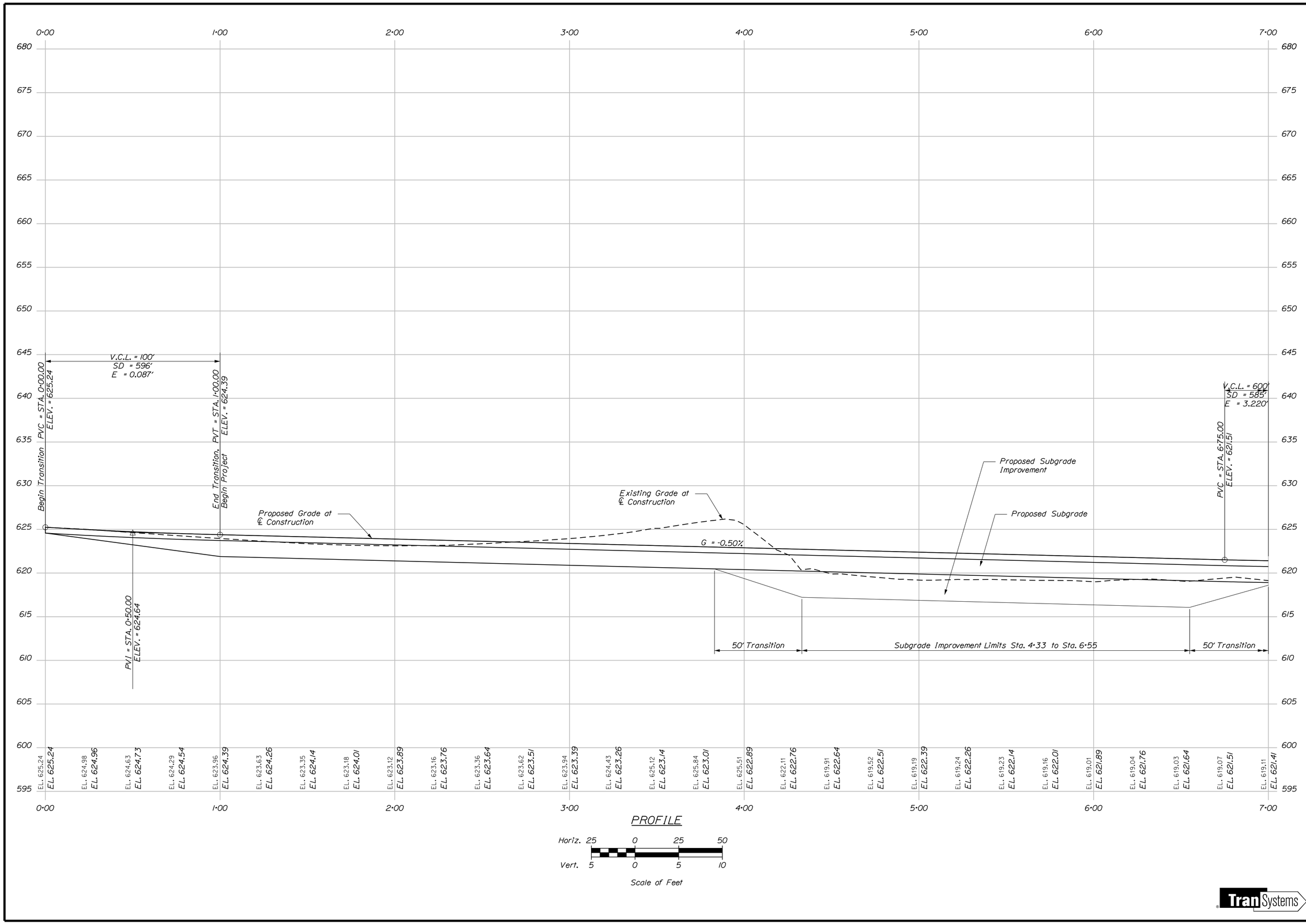

Tran Systems

STATE OF MAINE
DEPARTMENT OF TRANSPORTATION

BH-1510(500)X

WIN 15105.00

BRIDGE NO. 3248

BRIDGE PLANS

STATE OF MAINE
EVAN C. LOWELL
NO. 9065
LICENSED PROFESSIONAL ENGINEER

PROJ. MANAGER	S. BODGE	BY	DATE
DESIGN-DETAILED	T.SANDELL	T. SANDELL	05/2013
CHECKED-REVIEWED	D. WILK	E. LOWELL	
DESIGN2-DETAILED2			
DESIGN3-DETAILED3			
REVISIONS 1			
REVISIONS 2			
REVISIONS 3			
REVISIONS 4			
FIELD CHANGES			

SIGNATURE

9065

P.E. NUMBER

6/17/2013

DATE

MARTIN MEMORIAL BRIDGE
ANDROSCOGGIN RIVER
RUMFORD OXFORD COUNTY

ROUTE 232 PROFILE

SHEET NUMBER

11

OF 95

Filename: ...\B012\0030\Road\011_PROFILE.dgn Division: BRIDGE Username: T SANDELL Date:6/17/2013

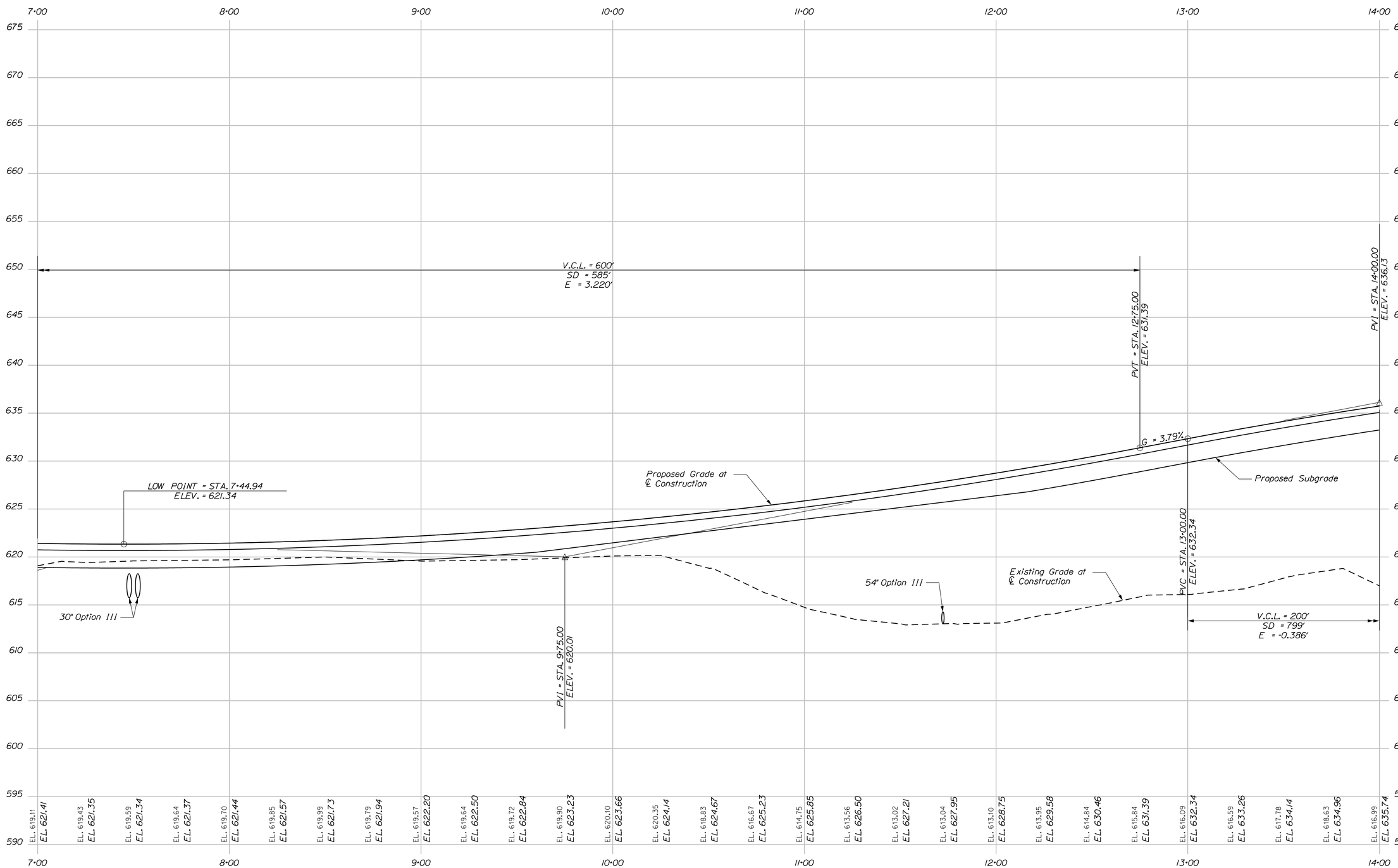

PROFILE

Horiz. 25 0 25 50

Vert. 5 0 5 10

Scale of Feet

TranSystems

STATE OF MAINE
DEPARTMENT OF TRANSPORTATION

BH-1510(500)X

WIN 15105.00

BRIDGE NO. 3248

BRIDGE PLANS

STATE OF MAINE
EVAN C. LOWELL
NO. 9065
PROFESSIONAL ENGINEER

6-17-13

PROJ. MANAGER	S. BRIDGE	BY	DATE
DESIGN-DETAILED	T. SANDELL	T. SANDELL	05/2013
CHECKED-REVIEWED	D. WILK	E. LOWELL	
DESIGN2-DETAILED2			
DESIGN3-DETAILED3			
REVISIONS 1			
REVISIONS 2			
REVISIONS 3			
REVISIONS 4			
FIELD CHANGES			

SIGNATURE

9065

P.E. NUMBER

6/17/2013

DATE

MARTIN MEMORIAL BRIDGE
ANDROSCOGGIN RIVER
RUMFORD OXFORD COUNTY

ROUTE 232 PROFILE

SHEET NUMBER

12

OF 95

Filename: ...\B012\0030\Road\012_PROFILE.dgn Division: BRIDGE Username: T SANDELL Date:6/17/2013

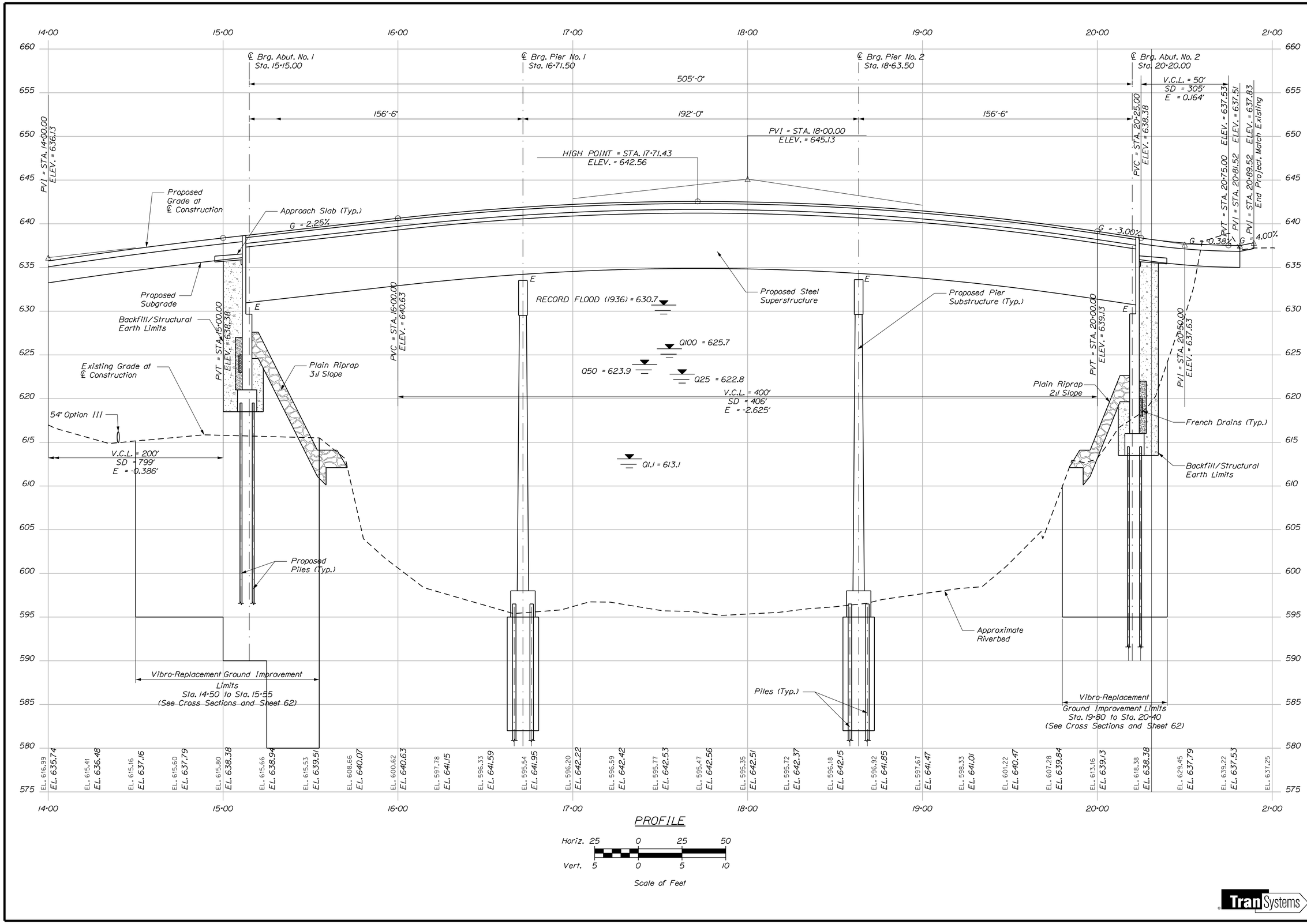

STATE OF MAINE
DEPARTMENT OF TRANSPORTATION

BH-1510(500)X

WIN 15105.00

BRIDGE NO. 3248

BRIDGE PLANS

STATE OF MAINE
EVAN C. LOWELL
NO. 9065
PROFESSIONAL ENGINEER

6-17-13

	BY	DATE
PROJ. MANAGER	S. BOOGE	
DESIGN-DETAILED	T. SANDELL	T. SANDELL	05/2013
CHECKED-REVIEWED	D. WILK	E. LOWELL	05/2013
DESIGN2-DETAILED2		
DESIGN3-DETAILED3		
REVISIONS 1		
REVISIONS 2		
REVISIONS 3		
REVISIONS 4		
FIELD CHANGES		

SIGNATURE
9065
P.E. NUMBER
6/17/2013
DATE

MARTIN MEMORIAL BRIDGE
ANDROSCOGGIN RIVER
RUMFORD OXFORD COUNTY

ROUTE 232 PROFILE

SHEET NUMBER
13
OF 95

TranSystems

Filename: ...\B012\0030\Road\013_PROFILE.dgn Division: BRIDGE Date:6/17/2013 Username: T SANDELL

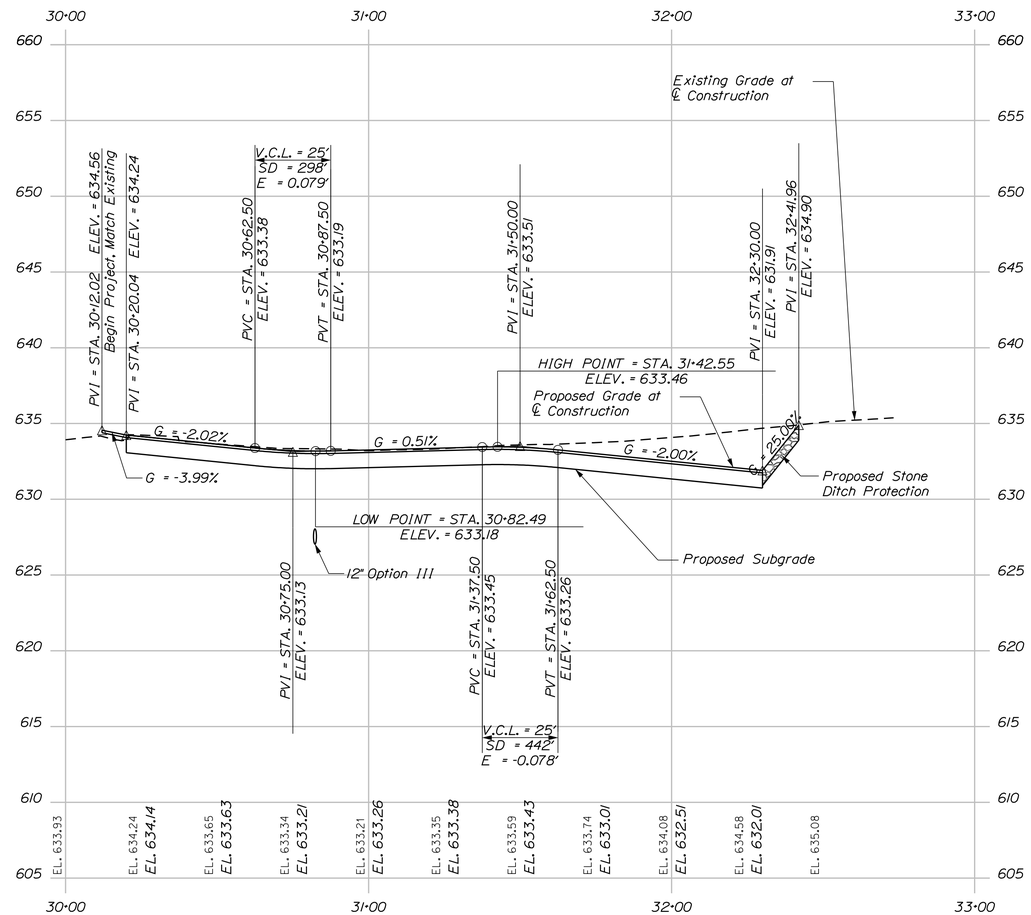

OLD ROUTE 232 PROFILE

Horiz. 25 0 25 50

Vert. 5 0 5 10

Scale of Feet

Filename: ...\B012\0030\Road\014_PROFILE.dgn Division: BRIDGE Username: T SANDELL Date:6/17/2013

STATE OF MAINE
DEPARTMENT OF TRANSPORTATION

BH-1510(500)X

WIN 15105.00

BRIDGE NO. 3248

BRIDGE PLANS

STATE OF MAINE EVAN C. LOWELL NO. 9065 LICENSED PROFESSIONAL ENGINEER

6-17-13

PROJ. MANAGER	S. BOOGE	BY	DATE
DESIGN-DETAILED	T. SANDELL	T. SANDELL	05/2013
CHECKED-REVIEWED	D. WILK	E. LOWELL	
DESIGN2-DETAILED2			
DESIGN3-DETAILED3			
REVISIONS 1			
REVISIONS 2			
REVISIONS 3			
REVISIONS 4			
FIELD CHANGES			

SIGNATURE

9065

P.E. NUMBER

6/17/2013

DATE

MARTIN MEMORIAL BRIDGE
ANDROSCOGGIN RIVER
RUMFORD OXFORD COUNTY

OLD ROUTE 232 PROFILE

SHEET NUMBER

14

OF 95

TranSystems

GRANITE CURB GEOMETRIC POINTS				
POINT	NORTHING	EASTING	STATION	OFFSET
3*	608195.4264	906591.7136	20+75.07	44.13' LT
4*	608148.9472	906569.4041	20+34.70	16.00' LT
6*	608146.7410	906566.0487	20+30.69	16.00' LT
7*	608113.2708	906573.3901	20+18.43	16.00' RT
8*	608114.6138	906575.4327	20+20.88	16.00' RT
9*	608113.9207	906631.3969	20+70.84	46.43' RT
23	607910.5301	906921.3749	55+61.25	20.00' RT
24	607906.0713	906940.8799	55+80.48	18.89' RT

GRANITE CURB GEOMETRIC POINTS					
CENTER OF RADIUS					
POINT	NORTHING	EASTING	STATION	OFFSET	RADIUS
5*	608190.7258	906541.9350	20+34.70	66.00' LT	50'
10*	608072.8352	906602.9017	20+20.88	66.00' RT	50'

GRANITE CURB GEOMETRIC POINTS				
CATCH BASIN HEADERS				
POINT	NORTHING	EASTING	STATION	OFFSET
H-1	607943.4970	906871.7210	54+78.21	19.18' RT
H-2	607916.9547	906906.7204	55+45.92	18.43' RT

GRANITE CURB GEOMETRIC POINTS				
4 FT TERMINAL ENDS - STRAIGHT				
POINT	NORTHING	EASTING	STATION	OFFSET
1	608246.5499	906581.4227	50+83.54	19.85' RT
2	608242.7144	906582.5582	50+87.38	19.96' RT
11	608092.6554	906657.9894	52+49.12	22.71' RT
12	608089.9268	906660.9143	52+52.89	22.02' RT
13	608075.5599	906674.9010	52+72.03	20.00' RT
14	608072.4881	906677.4631	52+75.88	20.00' RT
15	608004.3355	906746.5034	53+69.28	20.00' RT
16	608001.8164	906749.6105	53+73.13	20.00' RT
17	607989.5971	906765.4161	53+92.34	20.00' RT
18	607987.2245	906768.6364	53+96.18	20.00' RT
19	607941.6427	906843.6022	54+80.63	20.00' RT
20	607939.8754	906847.1906	54+84.48	20.00' RT
21	607917.4528	906900.5399	55+40.14	20.00' RT
22	607916.1259	906904.3134	55+43.99	20.00' RT

Notes:

1. Points denoted with * are stationed along Proposed Route 232.
2. All other points are stationed along Route 2.
3. Existing curb to be removed and reset as directed by the Resident.

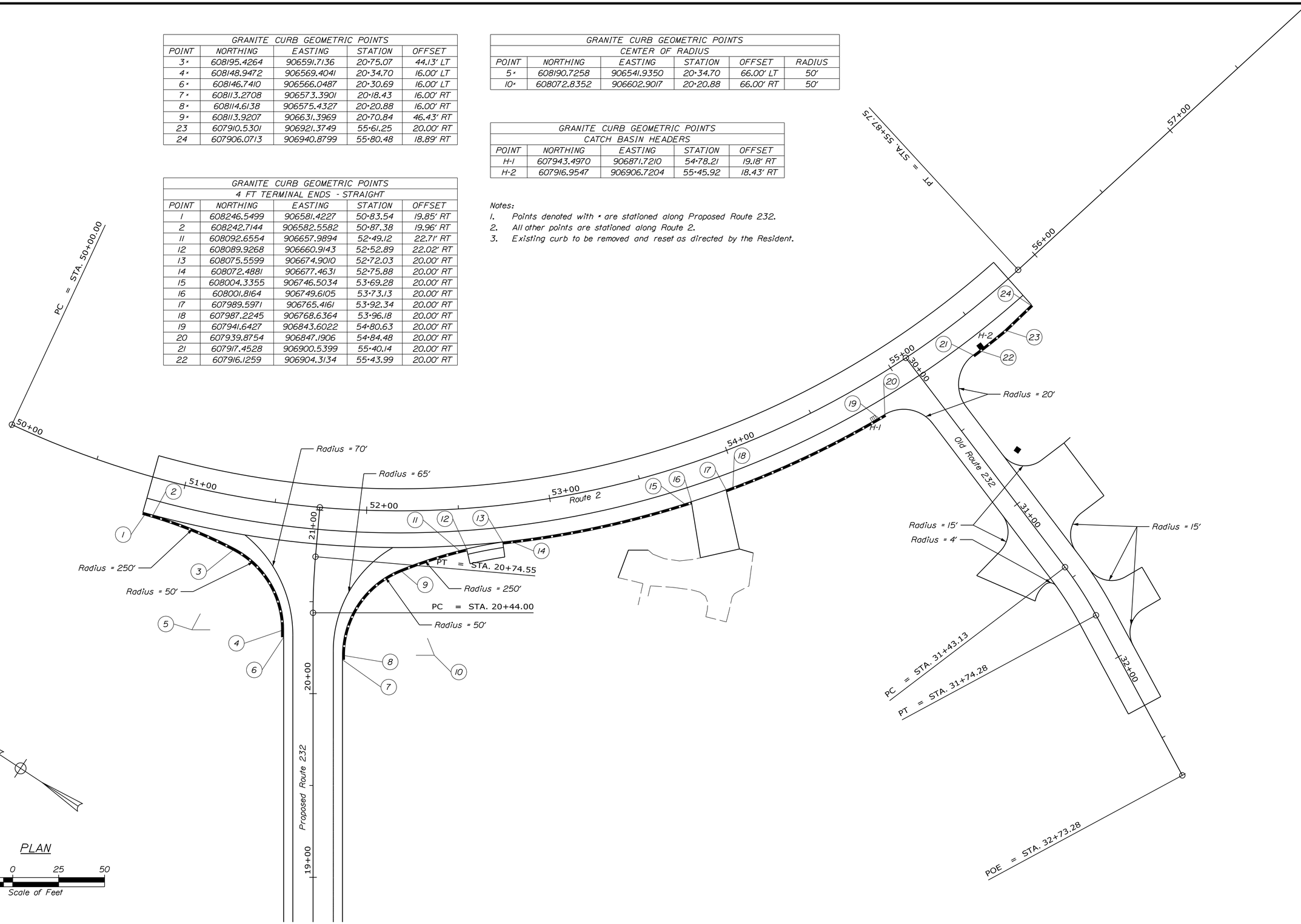

STATE OF MAINE
DEPARTMENT OF TRANSPORTATION

BH-1510(500)X

WIN 15105.00

BRIDGE NO. 3248

BRIDGE PLANS

STATE OF MAINE
EVAN C. LOWELL
NO. 9065
PROFESSIONAL ENGINEER

6-17-13

		BY	DATE
PROJ. MANAGER	S. BRIDGE		
DESIGN-DETAILED	T. SANDELL	T. SANDELL	05/2013
CHECKED-REVIEWED	D. WILK	E. LOWELL	
DESIGN2-DETAILED2			
DESIGN3-DETAILED3			
REVISIONS 1			
REVISIONS 2			
REVISIONS 3			
REVISIONS 4			
FIELD CHANGES			

SIGNATURE

9065
P.E. NUMBER

6/17/2013
DATE

MARTIN MEMORIAL BRIDGE
ANDROSCOGGIN RIVER
RUMFORD OXFORD COUNTY

GEOMETRICS AND CURB LAYOUT PLAN

SHEET NUMBER
15
OF 95

TranSystems

Filename: G:\B012\0030\Road\015_CURB.dgn Division: BRIDGE Username: T SANDELL Date:6/17/2013

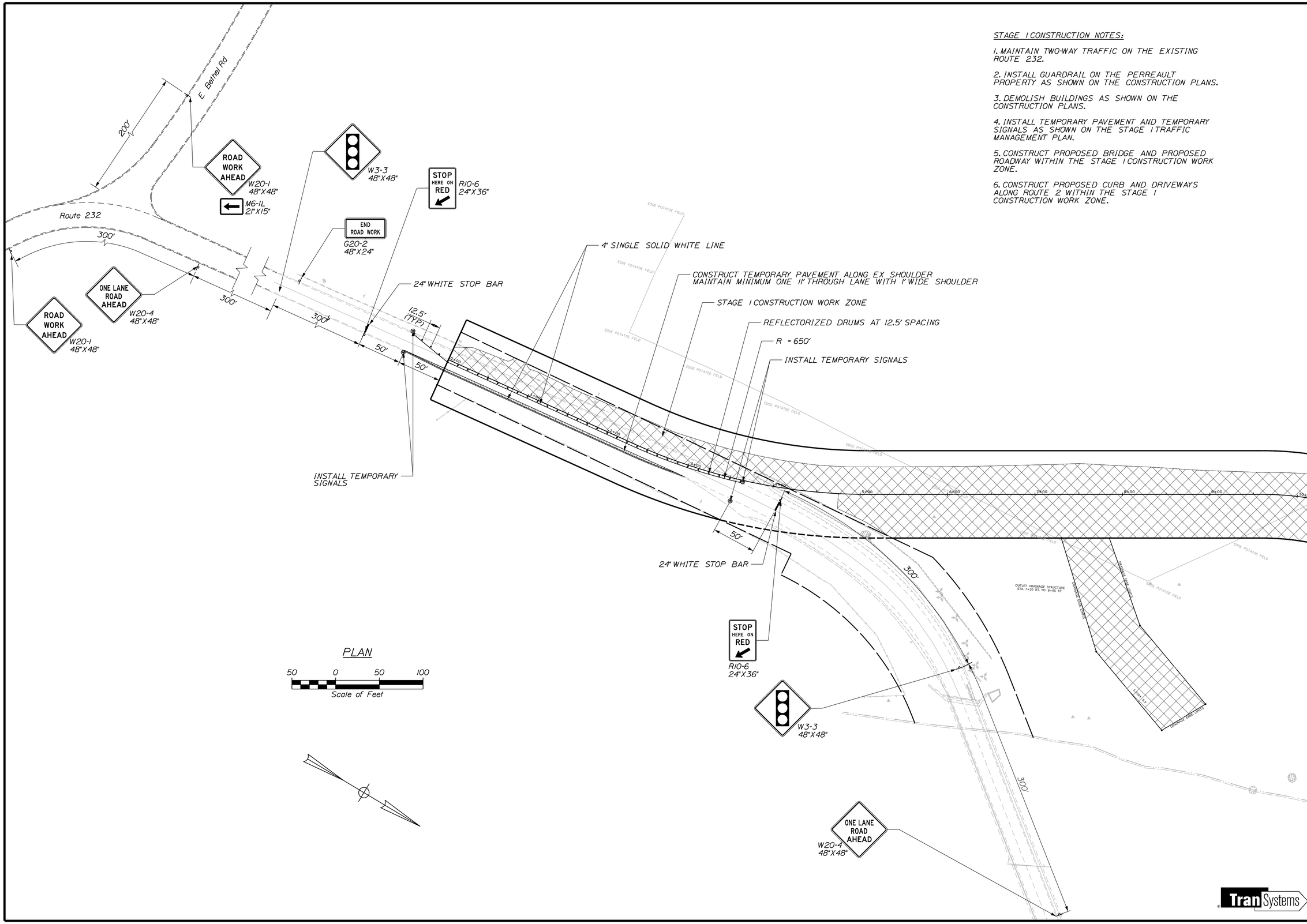

STAGE 1 CONSTRUCTION NOTES:

1. MAINTAIN TWO-WAY TRAFFIC ON THE EXISTING ROUTE 232.

2. INSTALL GUARDRAIL ON THE PERREAULT PROPERTY AS SHOWN ON THE CONSTRUCTION PLANS.

3. DEMOLISH BUILDINGS AS SHOWN ON THE CONSTRUCTION PLANS.

4. INSTALL TEMPORARY PAVEMENT AND TEMPORARY SIGNALS AS SHOWN ON THE STAGE 1 TRAFFIC MANAGEMENT PLAN.

5. CONSTRUCT PROPOSED BRIDGE AND PROPOSED ROADWAY WITHIN THE STAGE 1 CONSTRUCTION WORK ZONE.

6. CONSTRUCT PROPOSED CURB AND DRIVEWAYS ALONG ROUTE 2 WITHIN THE STAGE 1 CONSTRUCTION WORK ZONE.

STATE OF MAINE
DEPARTMENT OF TRANSPORTATION

BH-1510(500)X

WIN 15105.00

BRIDGE NO. 3248

BRIDGE PLANS

STATE OF MAINE
EVAN C. LOWELL
NO. 9065
PROFESSIONAL ENGINEER

PROJ. MANAGER	S. BODGE		
DESIGN-DETAILED	T. SANDELL	T. SANDELL	5/29/2013
CHECKED-REVIEWED	D. WILK	E. LOWELL	
DESIGN2-DETAILED2			
DESIGN3-DETAILED3			
REVISIONS 1			
REVISIONS 2			
REVISIONS 3			
REVISIONS 4			
FIELD CHANGES			

SIGNATURE
9065
P.E. NUMBER
6/17/2013
DATE

MARTIN MEMORIAL BRIDGE
ANDROSCOGGIN RIVER
RUMFORD OXFORD COUNTY

TRAFFIC MANAGEMENT PLAN
STAGE 1

SHEET NUMBER
16
OF 95

TranSystems

Filename: G:\B012\0030\Road\016_TMP.dgn Division: BRIDGE Username: T SANDELL Date:6/17/2013

STAGE 1 CONSTRUCTION NOTES:

1. MAINTAIN TWO-WAY TRAFFIC ON THE EXISTING ROUTE 232.

2. INSTALL GUARDRAIL ON THE PERREAULT PROPERTY AS SHOWN ON THE CONSTRUCTION PLANS.

3. DEMOLISH BUILDINGS AS SHOWN ON THE CONSTRUCTION PLANS.

4. INSTALL TEMPORARY PAVEMENT AND TEMPORARY SIGNALS AS SHOWN ON THE STAGE 1 TRAFFIC MANAGEMENT PLAN.

5. CONSTRUCT PROPOSED BRIDGE AND PROPOSED ROADWAY WITHIN THE STAGE 1 CONSTRUCTION WORK ZONE.

6. CONSTRUCT PROPOSED CURB AND DRIVEWAYS ALONG ROUTE 2 WITHIN THE STAGE 1 CONSTRUCTION WORK ZONE.

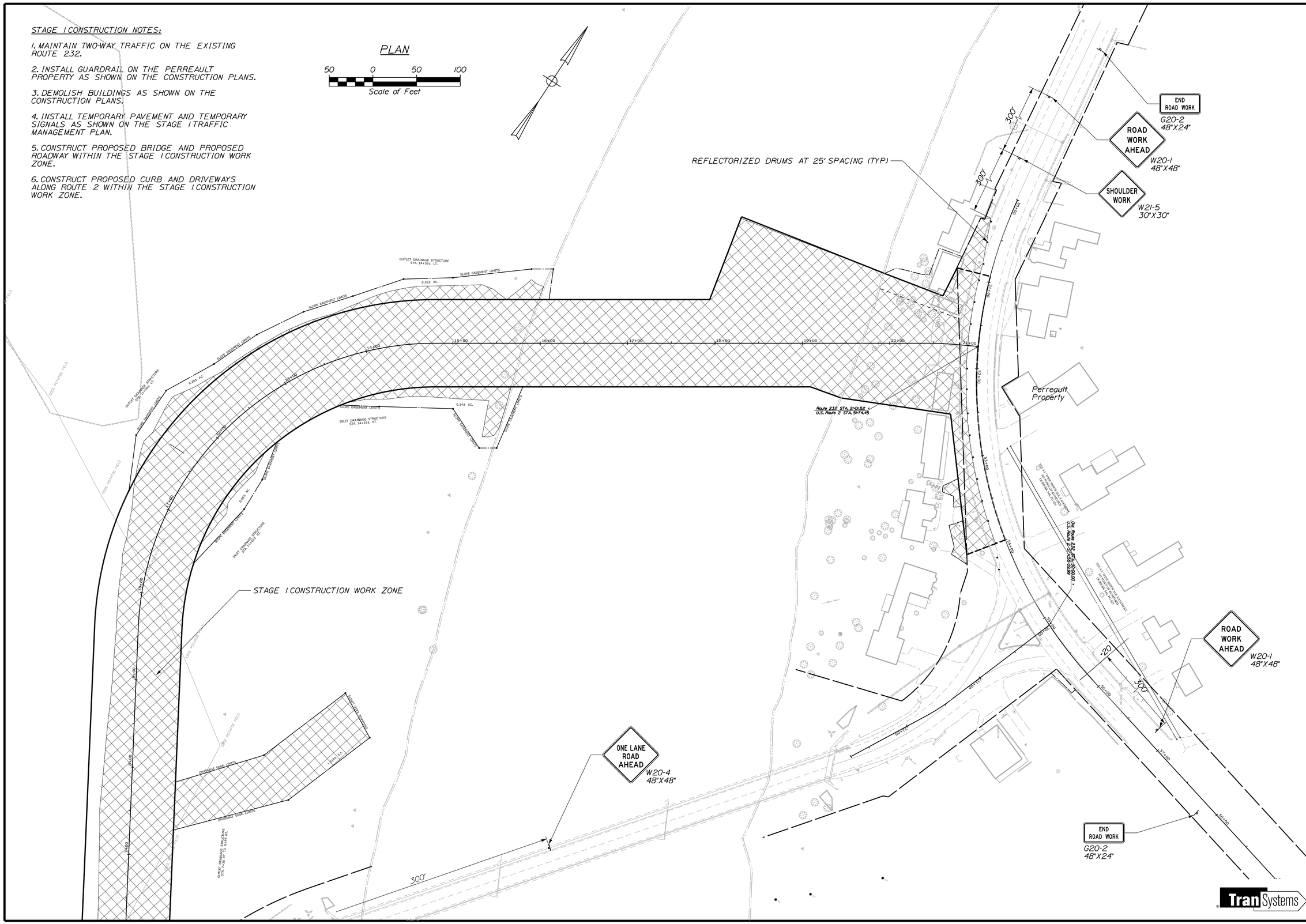

STATE OF MAINE
DEPARTMENT OF TRANSPORTATION

BH-1510(500)X

WIN 15105.00

BRIDGE NO. 3248

BRIDGE PLANS

STATE OF MAINE
EVAN C. LOWELL
NO. 9065
PROFESSIONAL ENGINEER
6-17-13

PROJ. MANAGER	S. BRIDGE	BY	DATE
DESIGN-DETAILED	T. SANDELL	T. SANDELL	05/2013
CHECKED-REVIEWED	D. WILK	E. LOWELL	
DESIGN2-DETAILED2			
DESIGN3-DETAILED3			
REVISIONS 1			
REVISIONS 2			
REVISIONS 3			
REVISIONS 4			
FIELD CHANGES			

SIGNATURE
9065
P.E. NUMBER
6/17/2013
DATE

MARTIN MEMORIAL BRIDGE
ANDROSCOGGIN RIVER
RUMFORD OXFORD COUNTY

TRAFFIC MANAGEMENT PLAN STAGE 1

SHEET NUMBER

17

OF 95

Filename: G:\B012\0030\Road\017_TMP.dgn Division: BRIDGE Username: T SANDELL Date:6/17/2013

STAGE 2 CONSTRUCTION NOTES:

1. MAINTAIN TWO-WAY TRAFFIC ON THE NEWLY CONSTRUCTED ROADWAY.

2. RELOCATE TEMPORARY SIGNALS AS SHOWN ON THE STAGE 2 TRAFFIC MANAGEMENT PLAN.

3. RECONSTRUCT REMAINING PAVEMENT ALONG ROUTE 232 WITHIN THE STAGE 2 CONSTRUCTION WORK ZONE.

4. CONSTRUCT REMAINING DRIVEWAYS, SHOULDERS, AND CURB WITHIN THE STAGE 2 WORK ZONE. INSTALL GUARDRAIL AT THE END OF OLD ROUTE 232.

5. DEMOLISH EXISTING BRIDGE AND ROADWAY.

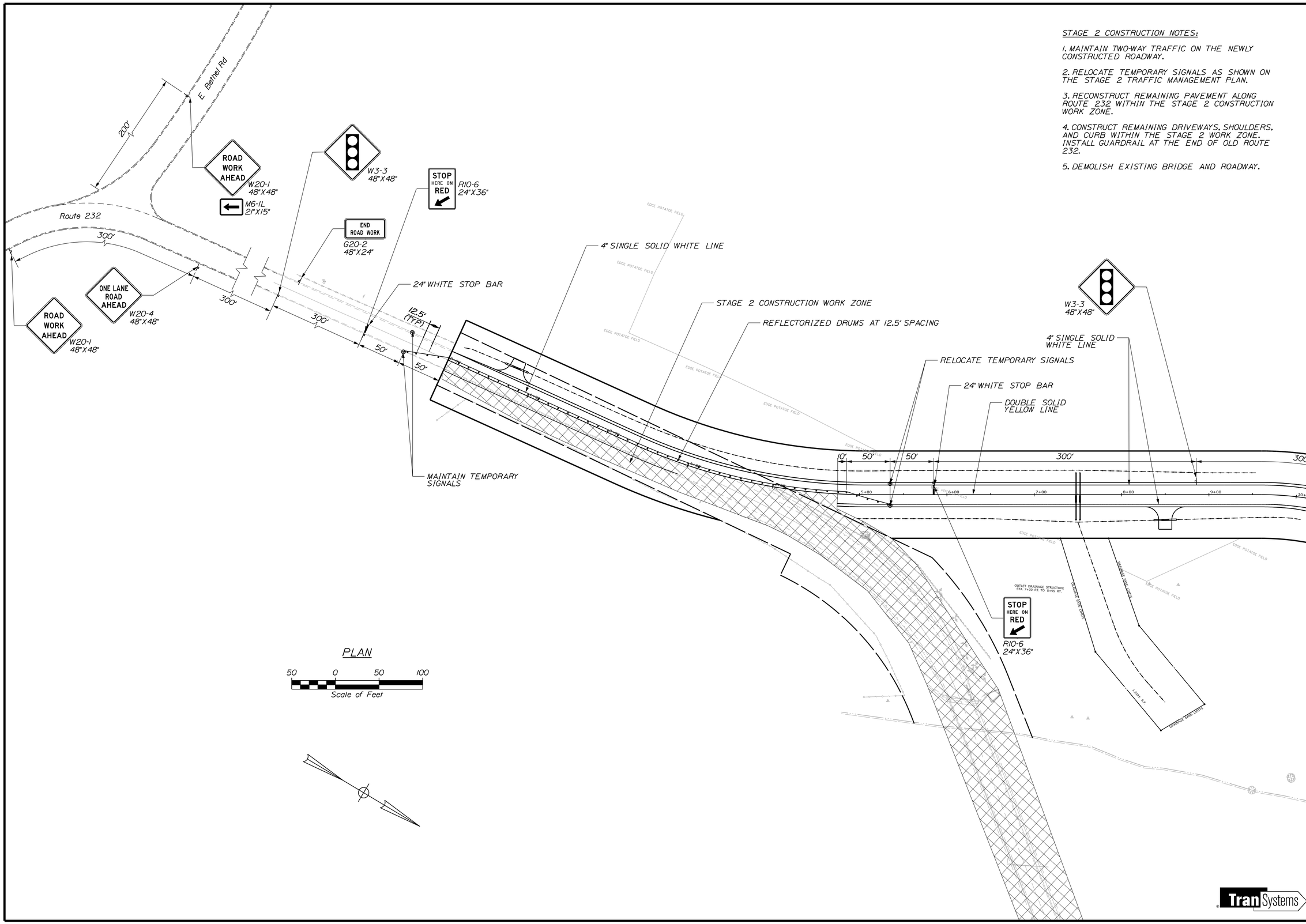

STATE OF MAINE
DEPARTMENT OF TRANSPORTATION

BH-1510(500)X

WIN 15105.00

BRIDGE NO. 3248

BRIDGE PLANS

STATE OF MAINE EVAN C. LOWELL NO. 9065 PROFESSIONAL ENGINEER

PROJ. MANAGER	S. BODGE	BY	DATE
DESIGN-DETAILED	T. SANDELL	T. SANDELL	
CHECKED-REVIEWED	D. WILK	E. LOWELL	5/29/2013
DESIGN2-DETAILED2			
DESIGN3-DETAILED3			
REVISIONS 1			
REVISIONS 2			
REVISIONS 3			
REVISIONS 4			
FIELD CHANGES			

SIGNATURE
9065
P.E. NUMBER
6/17/2013
DATE

MARTIN MEMORIAL BRIDGE
ANDROSCOGGIN RIVER
RUMFORD OXFORD COUNTY

TRAFFIC MANAGEMENT PLAN
STAGE 2

SHEET NUMBER
18
OF 95

TranSystems

Filename: G:\B012\0030\Road\018_TMP.dgn Division: BRIDGE Username: T SANDELL Date:6/17/2013

STAGE 2 CONSTRUCTION NOTES:

1. MAINTAIN TWO-WAY TRAFFIC ON THE NEWLY CONSTRUCTED ROADWAY.

2. RELOCATE TEMPORARY SIGNALS AS SHOWN ON THE STAGE 2 TRAFFIC MANAGEMENT PLAN.

3. RECONSTRUCT REMAINING PAVEMENT ALONG ROUTE 232 WITHIN THE STAGE 2 CONSTRUCTION WORK ZONE.

4. CONSTRUCT REMAINING DRIVEWAYS, SHOULDERS, AND CURB WITHIN THE STAGE 2 WORK ZONE. INSTALL GUARDRAIL AT THE END OF OLD ROUTE 232.

5. DEMOLISH EXISTING BRIDGE AND ROADWAY.

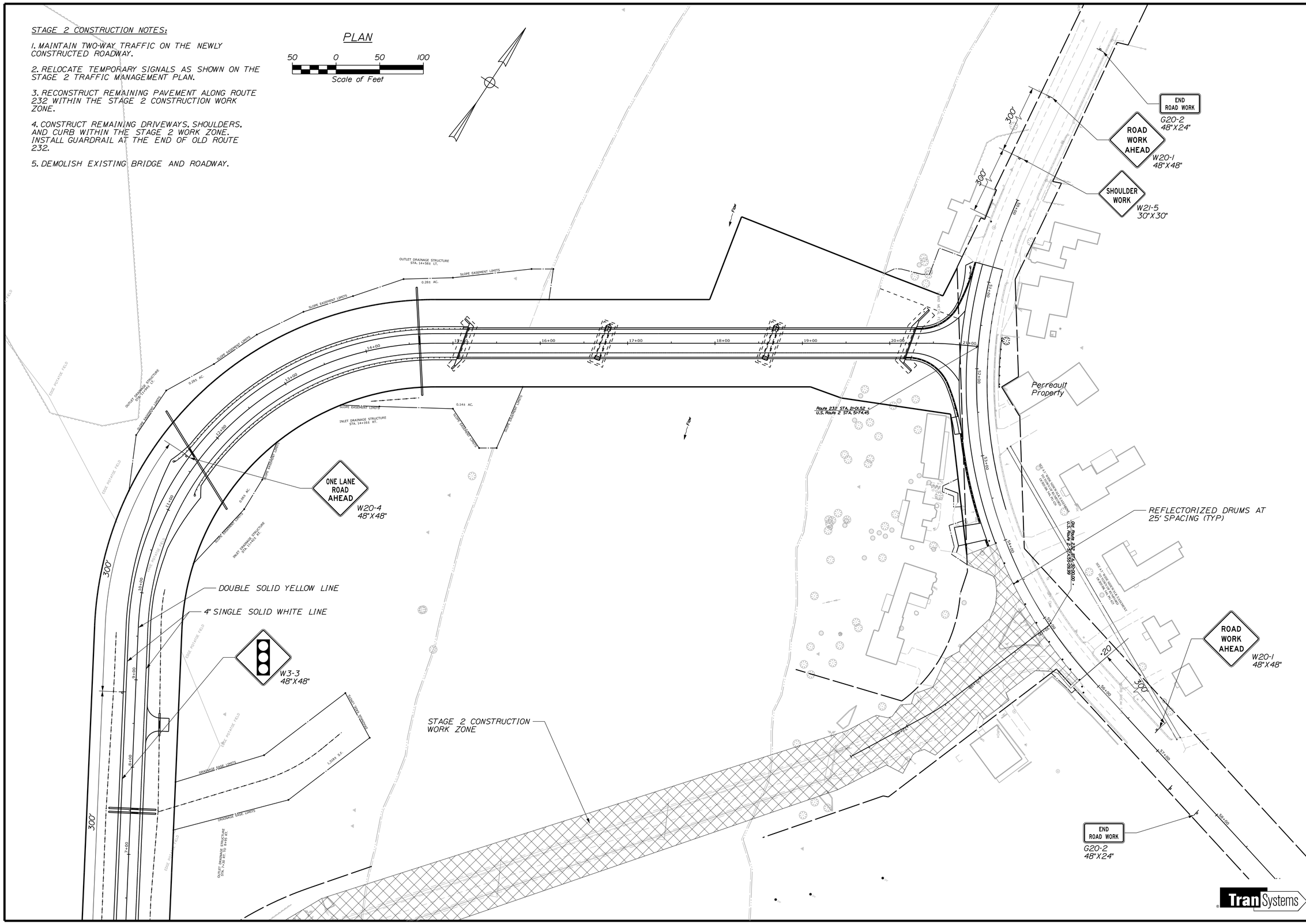

STATE OF MAINE
DEPARTMENT OF TRANSPORTATION

BH-1510(500)X

WIN 15105.00

BRIDGE NO. 3248

BRIDGE PLANS

STATE OF MAINE
EVAN C. LOWELL
NO. 9065
PROFESSIONAL ENGINEER
6-17-13

PROJ. MANAGER	S. BRIDGE		
DESIGN-DETAILED	T. SANDELL	T. SANDELL	05/2013
CHECKED-REVIEWED	D. WILK	E. LOWELL	
DESIGN2-DETAILED2			
DESIGN3-DETAILED3			
REVISIONS 1			
REVISIONS 2			
REVISIONS 3			
REVISIONS 4			
FIELD CHANGES			

SIGNATURE
9065
P.E. NUMBER
6/17/2013
DATE

MARTIN MEMORIAL BRIDGE
ANDROSCOGGIN RIVER
RUMFORD OXFORD COUNTY

TRAFFIC MANAGEMENT PLAN STAGE 2

SHEET NUMBER

19

OF 95

Filename: G:\B012\0030\Road\019_TMP.dgn Division: BRIDGE Username: T SANDELL Date:6/17/2013

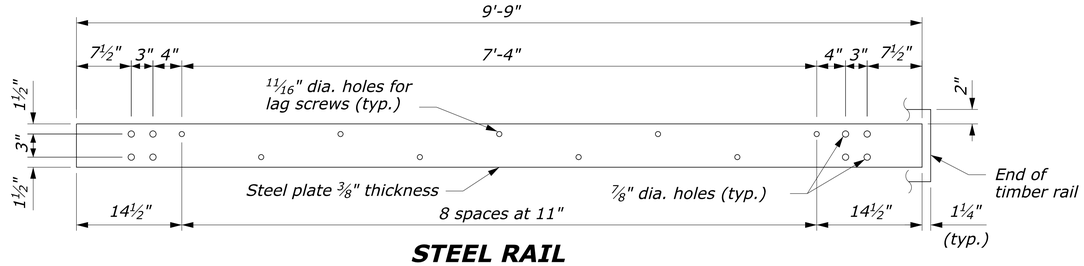

STEEL RAIL

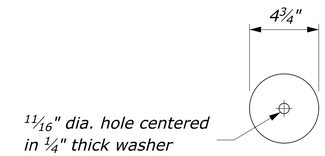

PLATE WASHER

NOTE:

1. *Use the Type A, blocked-out, system or the Type B, non-blocked-out, system as specified in the plans.*
2. *Use galvanized steel for all structural steel and fastener hardware as specified.*
3. *Place a terminal section (See Standards 617-61 and 617-62) on both approach and trailing ends of barrier installations.*

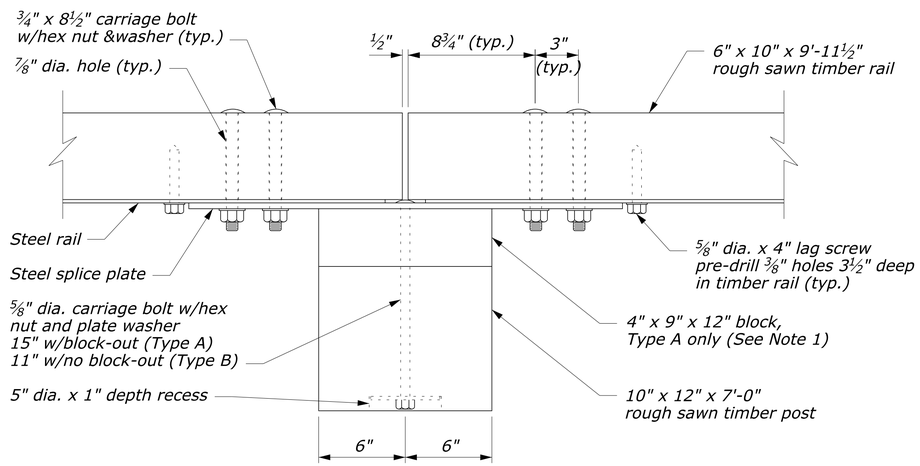

PLAN

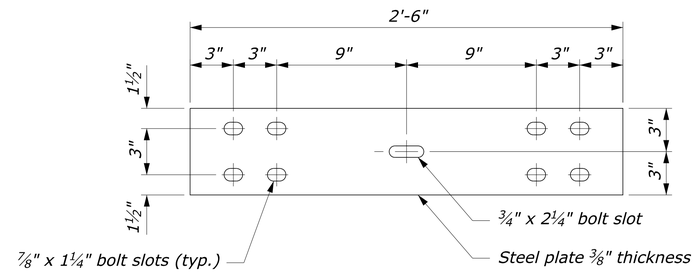

STEEL SPLICE PLATE

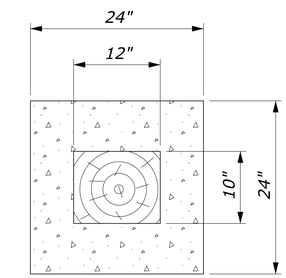

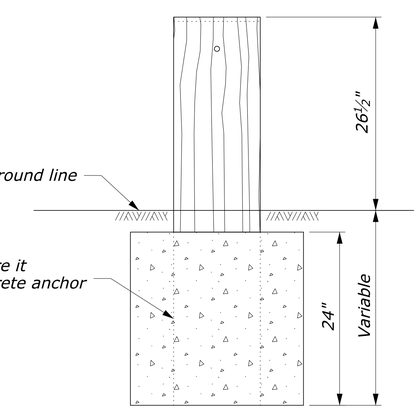

24" dia. round anchor is an acceptable alternative. Reduced size acceptable in solid rock.

CONCRETE ANCHOR FOR SHORT GUARDRAIL POST

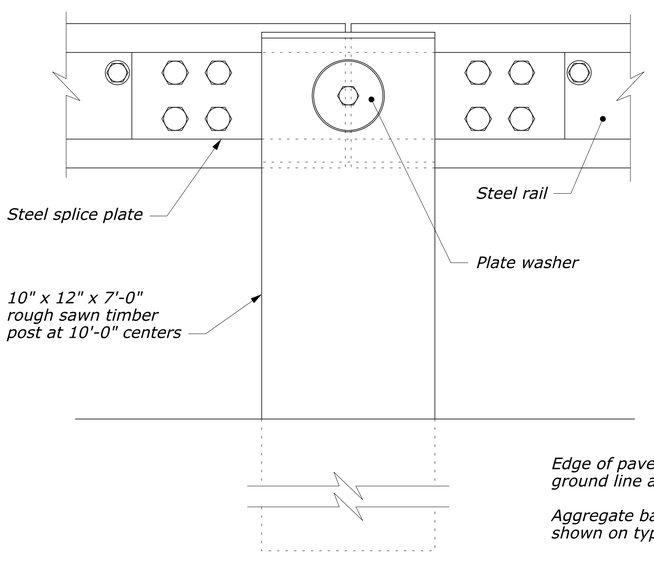

ELEVATION

POST CONNECTION

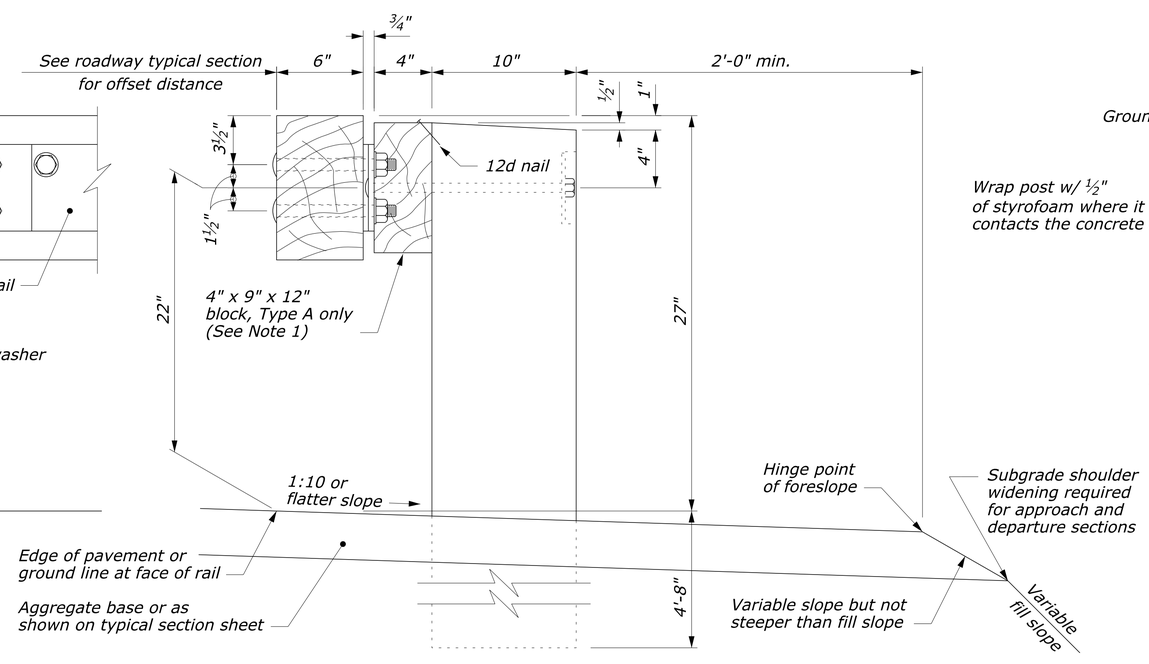

TYPICAL GUARDRAIL CROSS SECTION

NO SCALE

U.S. DEPARTMENT OF TRANSPORTATION
FEDERAL HIGHWAY ADMINISTRATION
FEDERAL LANDS HIGHWAY

U.S. CUSTOMARY STANDARD

STEEL-BACKED TIMBER GUARDRAIL
TYPE A & TYPE B

STANDARD APPROVED FOR USE 3/1990
REVISED: 4/1994 6/2005

STANDARD 617-60

STATE OF MAINE
DEPARTMENT OF TRANSPORTATION

BH-1510(500)X

WIN 15105.00

BRIDGE NO. 3248

BRIDGE PLANS

STATE OF MAINE EVAN C. LOWELL NO. 9065 LICENSED PROFESSIONAL ENGINEER 6-17-13

PROJ. MANAGER	S. BODGE		
DESIGN-DETAILED	T. SANDELL	T. SANDELL	11/2012
CHECKED-REVIEWED	D. WILK	E. LOWELL	05/2013
DESIGN2-DETAILED2			
DESIGN3-DETAILED3			
REVISIONS 1			
REVISIONS 2			
REVISIONS 3			
REVISIONS 4			
FIELD CHANGES			

SIGNATURE
9065
P.E. NUMBER
6/17/2013
DATE

MARTIN MEMORIAL BRIDGE
ANDROSCOGGIN RIVER
RUMFORD OXFORD COUNTY

STEEL BACKED TIMBER GUARDRAIL DETAILS

SHEET NUMBER
20
OF 95

Filename: ...\Road\020_GuardrailDetail1.dgn Division: BRIDGE Username: T SANDELL Date:6/17/2013

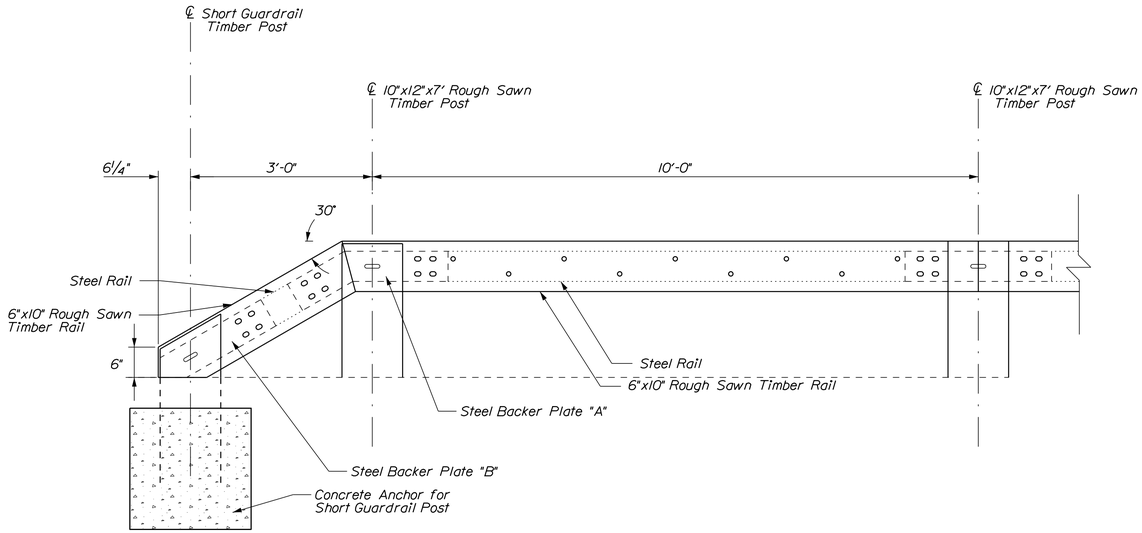

TYPICAL END TREATMENT FOR STEEL BACKED TIMBER GUARDRAIL

Sta. 51+62 Lt. and Sta. 52+21 Lt.

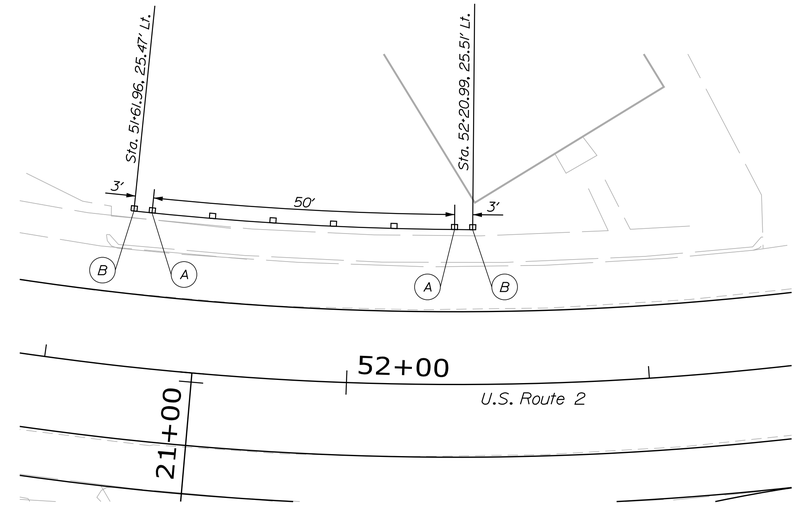

PLAN - POST LAYOUT AND BACKER PLATE LOCATIONS

Station/Offset given to center of posts

(A) Backer Plate designation

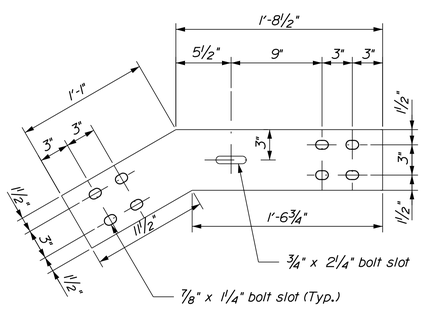

STEEL BACKER PLATE "A"

Steel Backed Timber Guardrail

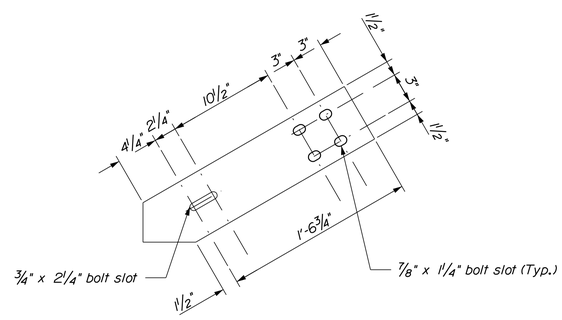

STEEL BACKER PLATE "B"

Steel Backed Timber Guardrail

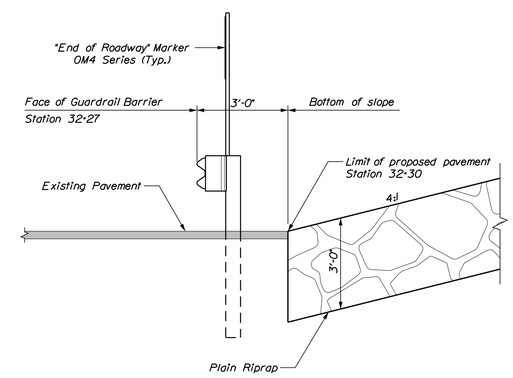

PROPOSED GUARDRAIL BARRIER SECTION

At centerline construction

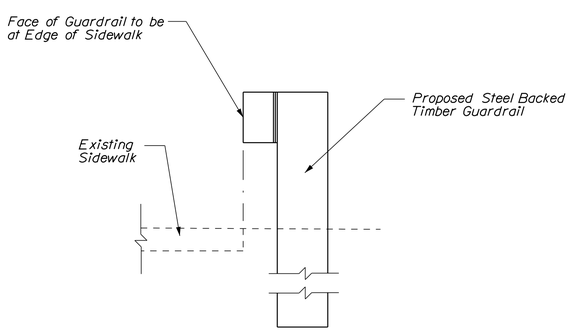

TYPICAL SECTION - STEEL BACKED TIMBER GUARDRAIL

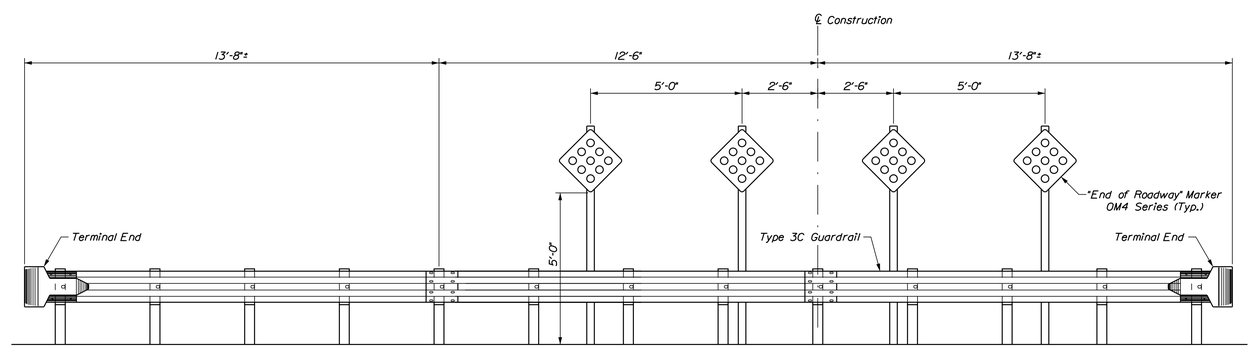

PROPOSED GUARDRAIL BARRIER

3 ~ Guardrail panels, 13 ~ Guardrail Posts, 2 ~ Terminal Ends.
4 ~ "End of Roadway" Markers (OM4 Series) on u-channel posts
Install at Station 32+30

NOTES:

1. Use galvanized steel for all structural steel and fastener hardware.
2. All backer plates to be ⅜" thick.

TranSystems

STATE OF MAINE
DEPARTMENT OF TRANSPORTATION

BH-1510(500)X

WIN 15105.00

BRIDGE NO. 3248

BRIDGE PLANS

STATE OF MAINE
EVAN C. LOWELL
NO. 9065
PROFESSIONAL ENGINEER
6-17-13

PROJ. MANAGER	S. BRIDGE	BY	DATE
DESIGN-DETAILED	T. SANDELL	T. SANDELL	11/2012
CHECKED-REVIEWED	D. WILK	E. LOWELL	05/2013
DESIGN2-DETAILED2			
DESIGN3-DETAILED3			
REVISIONS: 1			
REVISIONS: 2			
REVISIONS: 3			
REVISIONS: 4			
FIELD CHANGES			

SIGNATURE
9065
P.E. NUMBER
6/17/2013
DATE

MARTIN MEMORIAL BRIDGE
ANDROSCOGGIN RIVER
RUMFORD OXFORD COUNTY

GUARDRAIL DETAILS

SHEET NUMBER
21
OF 95

Filename: ...\Road\021_GuardrailDetail2.dgn Division: BRIDGE Username: T SANDELL Date:6/17/2013

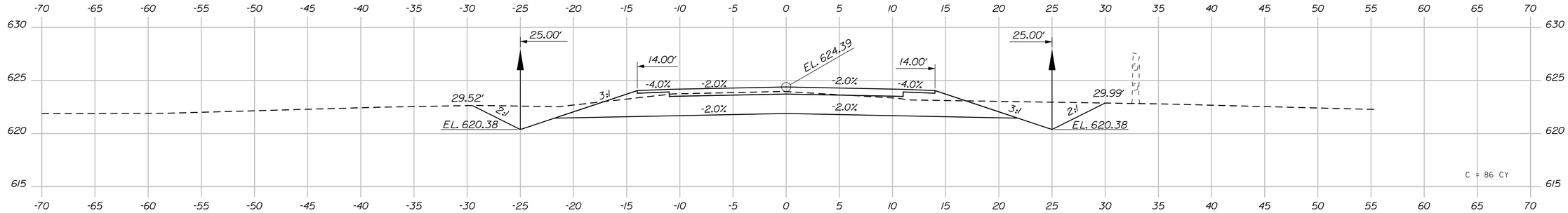

1+00.00
End Transition - Begin Project Sta. 1+00.00

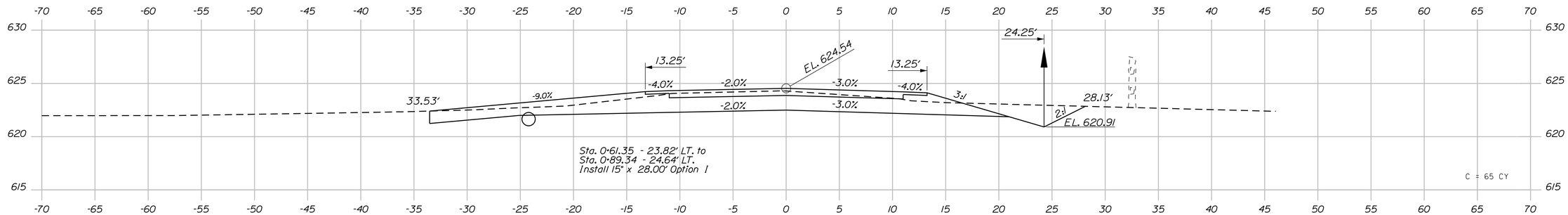

0+75.00

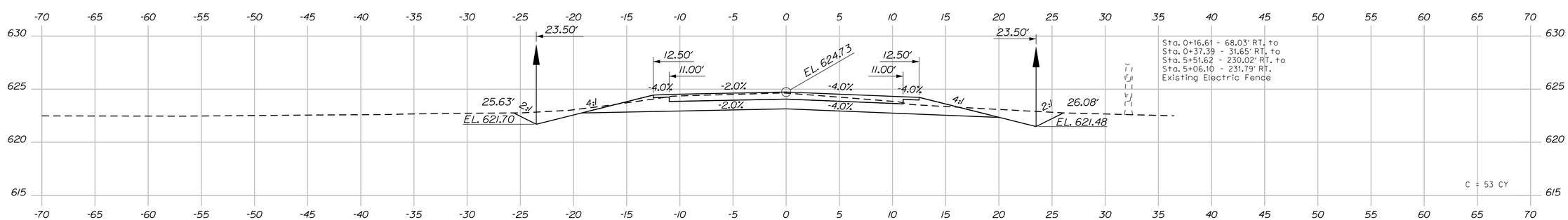

0+50.00

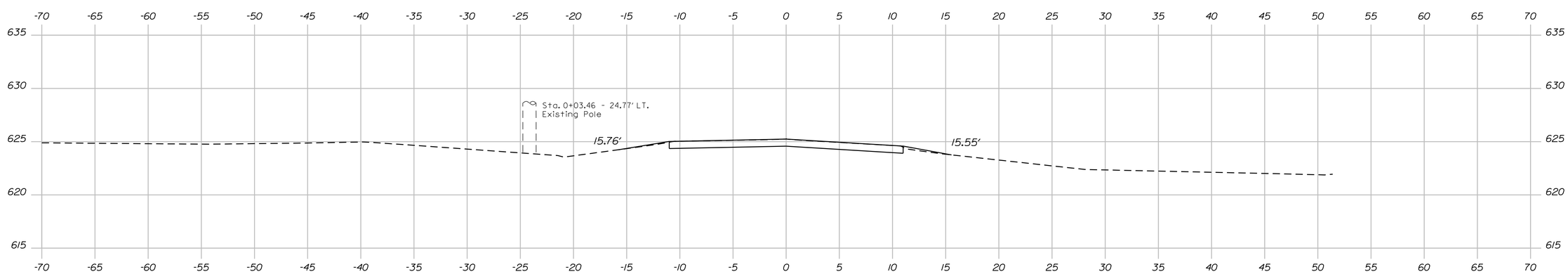

0+00.00
Begin Transition - Match Existing Sta. 0+00.00

TranSystems

STATE OF MAINE
DEPARTMENT OF TRANSPORTATION

BH-1510(500)X

WIN 15105.00

BRIDGE PLANS

BRIDGE NO. 3248

STATE OF MAINE EVAN C. LOWELL NO. 9065 PROFESSIONAL ENGINEER

6-17-13

PROJ. MANAGER	S. BIDGE		
DESIGN-DETAILED	T. SANDELL	T. SANDELL	05/2013
CHECKED-REVIEWED	D. WILK	E. LOWELL	
DESIGN2-DETAILED2			
DESIGN3-DETAILED3			
REVISIONS 1			
REVISIONS 2			
REVISIONS 3			
REVISIONS 4			
FIELD CHANGES			

SIGNATURE
9065
P.E. NUMBER
6/17/2013
DATE

MARTIN MEMORIAL BRIDGE
ANDROSCOGGIN RIVER
RUMFORD OXFORD COUNTY

ROUTE 232
CROSS SECTIONS

SHEET NUMBER
22
OF 95

Filename: ...\022_Xsection 0+00 to 1+00.dgn Division: BRIDGE Username: T SANDELL Date:6/17/2013

Sta. 0+00.00 to Sta. 1+00.00

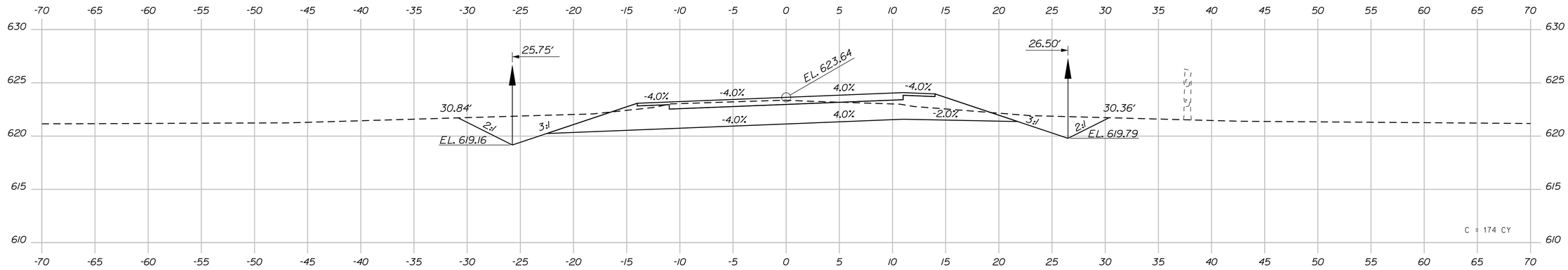

2+50.00

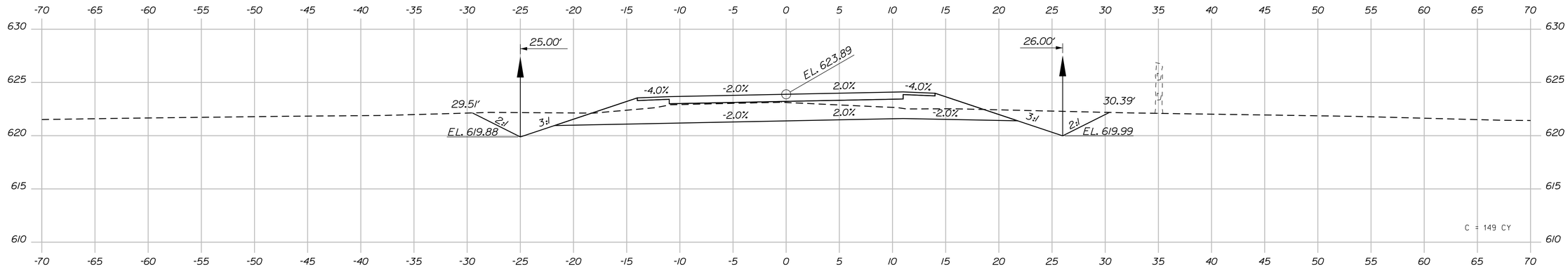

2+00.00

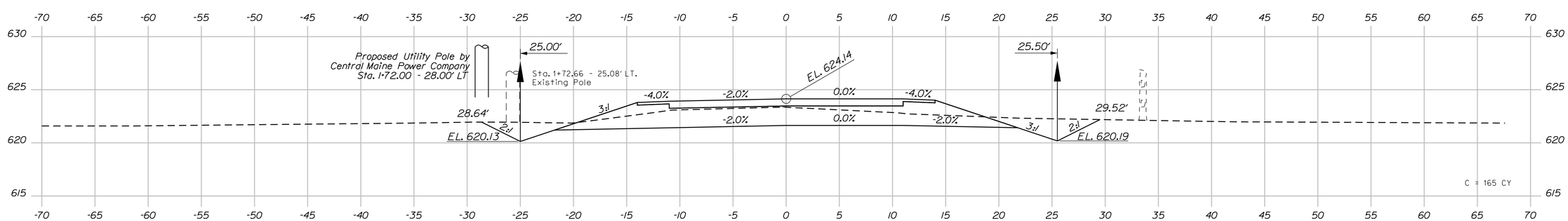

1+50.00

TranSystems

STATE OF MAINE
DEPARTMENT OF TRANSPORTATION

BH-1510(500)X

WIN 15105.00

BRIDGE NO. 3248

BRIDGE PLANS

STATE OF MAINE
EVAN C. LOWELL
NO. 9065
PROFESSIONAL ENGINEER

PROJ. MANAGER	S. BODGE	BY	DATE
DESIGN-DETAILED	T. SANDELL	T. SANDELL	05/2013
CHECKED-REVIEWED	D. WILK	E. LOWELL	
DESIGN2-DETAILED2			
DESIGN3-DETAILED3			
REVISIONS 1			
REVISIONS 2			
REVISIONS 3			
REVISIONS 4			
FIELD CHANGES			

SIGNATURE

9065
P.E. NUMBER

6/17/2013
DATE

MARTIN MEMORIAL BRIDGE
ANDROSCOGGIN RIVER
RUMFORD OXFORD COUNTY

ROUTE 232
CROSS SECTIONS

SHEET NUMBER
23
OF 95

Sta. 1+50.00 to Sta. 2+50.00

Filename: ...\023_Xsection 1+50 to 2+50.dgn Division: BRIDGE Username: T SANDELL Date:6/17/2013

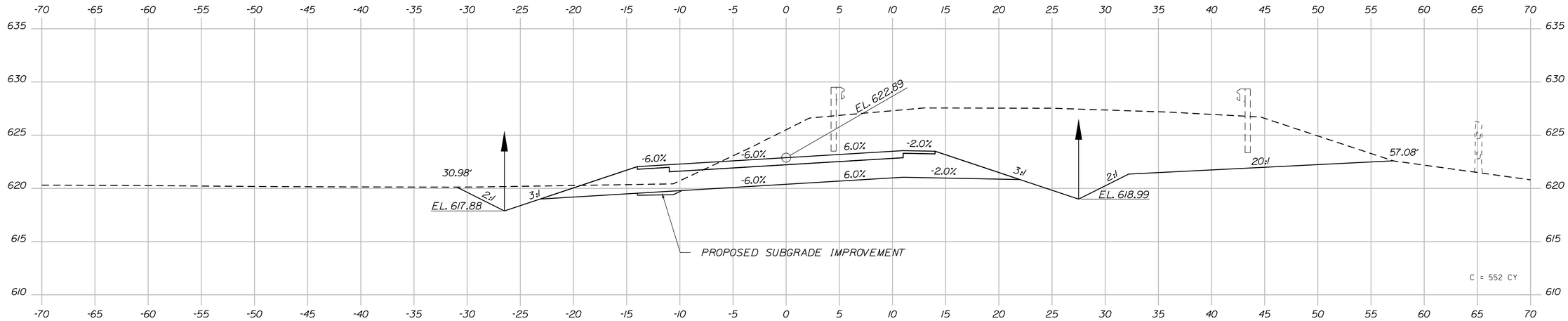

4+00.00

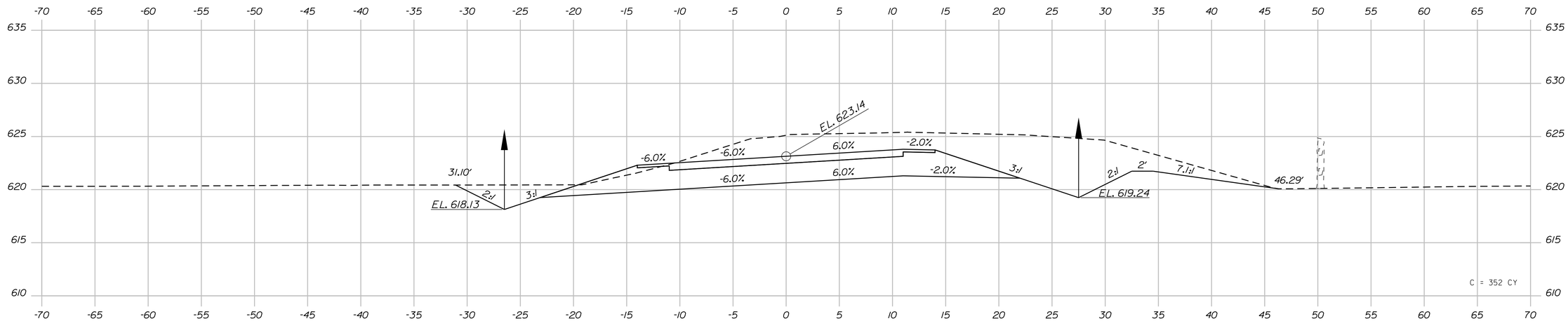

3+50.00

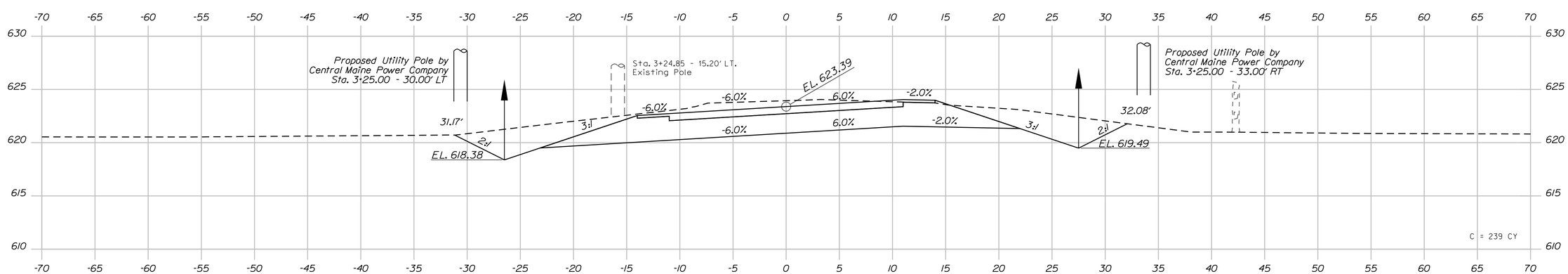

3+00.00

TranSystems

STATE OF MAINE
DEPARTMENT OF TRANSPORTATION

BH-1510(500)X

WIN 15105.00

BRIDGE NO. 3248

BRIDGE PLANS

STATE OF MAINE
EVAN C. LOWELL
NO. 9065
PROFESSIONAL ENGINEER
6-17-13

PROJ. MANAGER	S. BODGE		
DESIGN-DETAILED	T. SANDELL	T. SANDELL	05/2013
CHECKED-REVIEWED	D. WILK	E. LOWELL	
DESIGN2-DETAILED2			
DESIGN3-DETAILED3			
REVISIONS 1			
REVISIONS 2			
REVISIONS 3			
REVISIONS 4			
FIELD CHANGES			

SIGNATURE
9065
P.E. NUMBER
6/17/2013
DATE

MARTIN MEMORIAL BRIDGE
ANDROSCOGGIN RIVER
RUMFORD OXFORD COUNTY

ROUTE 232
CROSS SECTIONS

SHEET NUMBER
24
OF 95

Filename: ...\024_Xsection 3+00 to 4+00.dgn Division: BRIDGE Username: T SANDELL Date:6/17/2013

Sta. 3+00.00 to Sta. 4+00.00

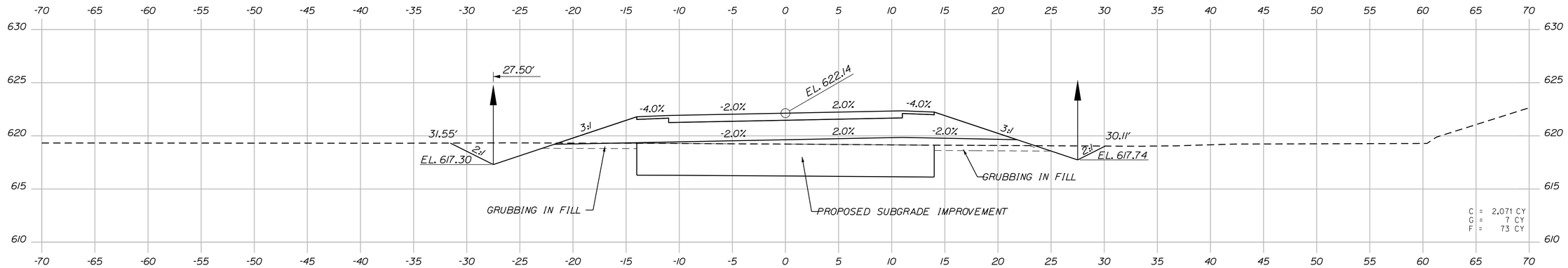

5+50.00

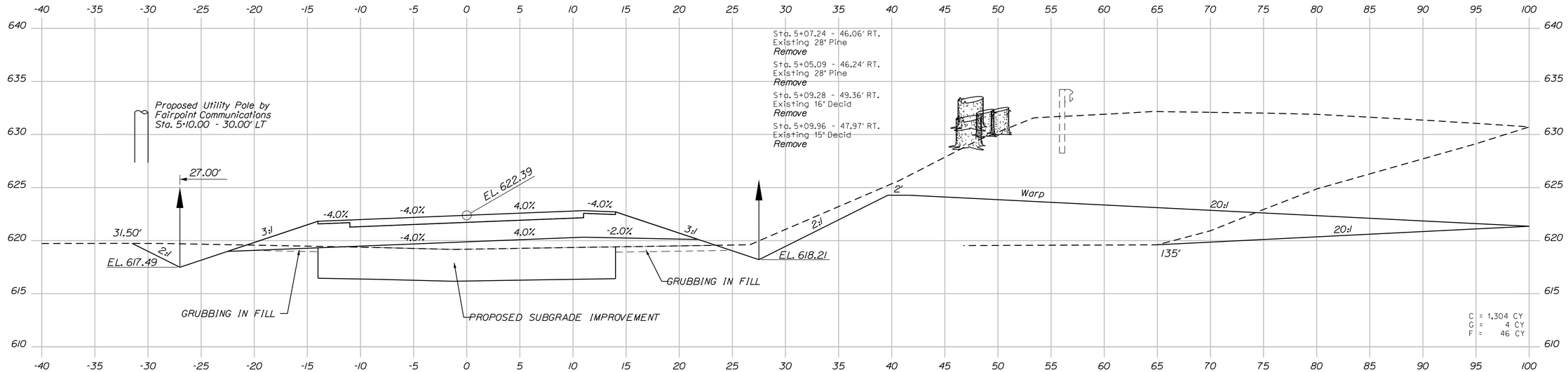

5+00.00

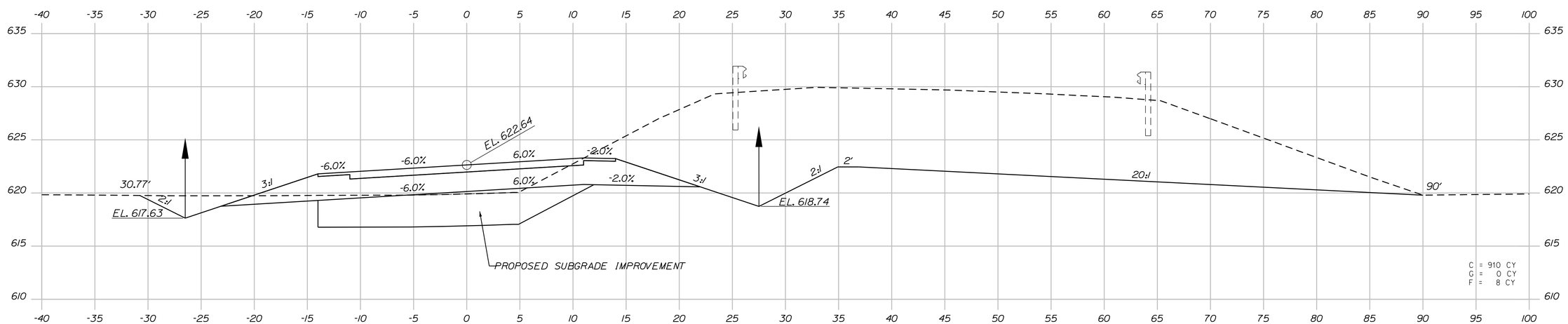

4+50.00

TranSystems

STATE OF MAINE
DEPARTMENT OF TRANSPORTATION

BH-1510(500)X

WIN 15105.00

BRIDGE PLANS

BRIDGE NO. 3248

STATE OF MAINE
EVAN C. LOWELL
NO. 9065
PROFESSIONAL ENGINEER

PROJ. MANAGER	S. BODGE	BY	DATE
DESIGN-DETAILED	T. SANDELL	T. SANDELL	05/2013
CHECKED-REVIEWED	D. WILK	E. LOWELL	
DESIGN2-DETAILED2			
DESIGN3-DETAILED3			
REVISIONS 1			
REVISIONS 2			
REVISIONS 3			
REVISIONS 4			
FIELD CHANGES			

SIGNATURE

9065
P.E. NUMBER

6/17/2013
DATE

MARTIN MEMORIAL BRIDGE
ANDROSCOGGIN RIVER
RUMFORD OXFORD COUNTY

ROUTE 232
CROSS SECTIONS

SHEET NUMBER
25
OF 95

Filename: ...\025_Xsection 4+50 to 5+50.dgn Division: BRIDGE Username: T SANDELL Date:6/17/2013

Sta. 4+50.00 to Sta. 5+50.00

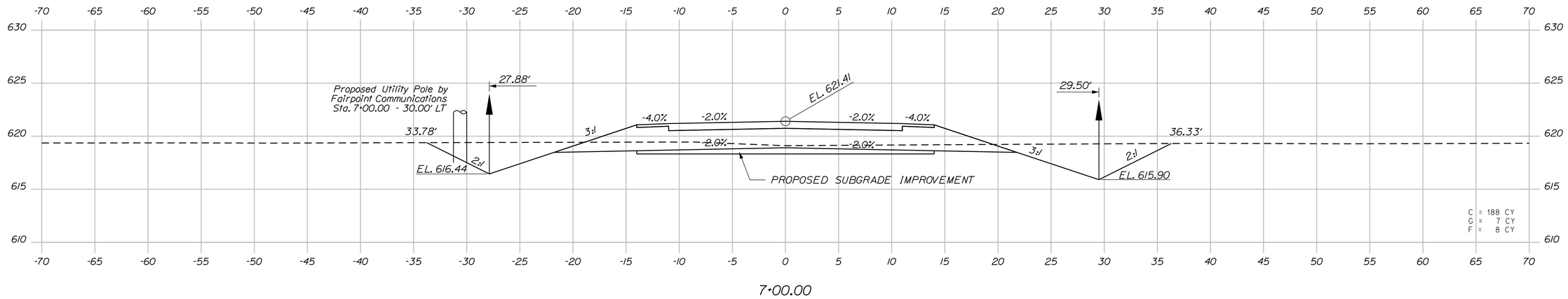

7+00.00

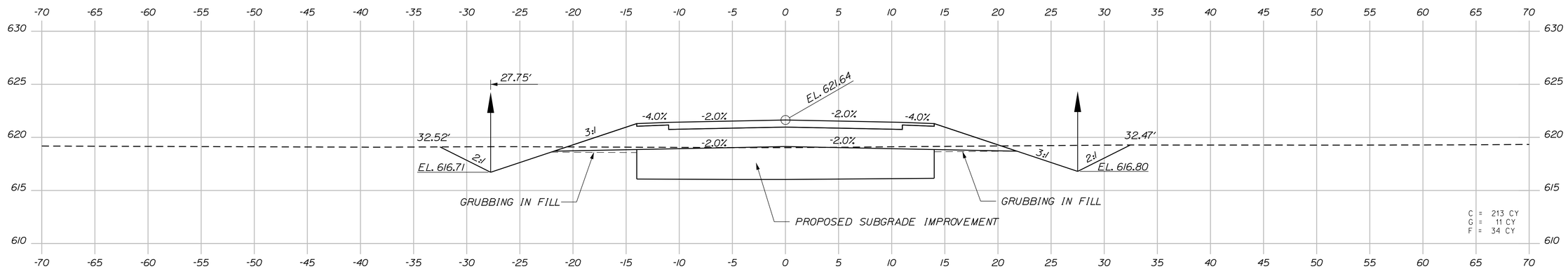

6+50.00

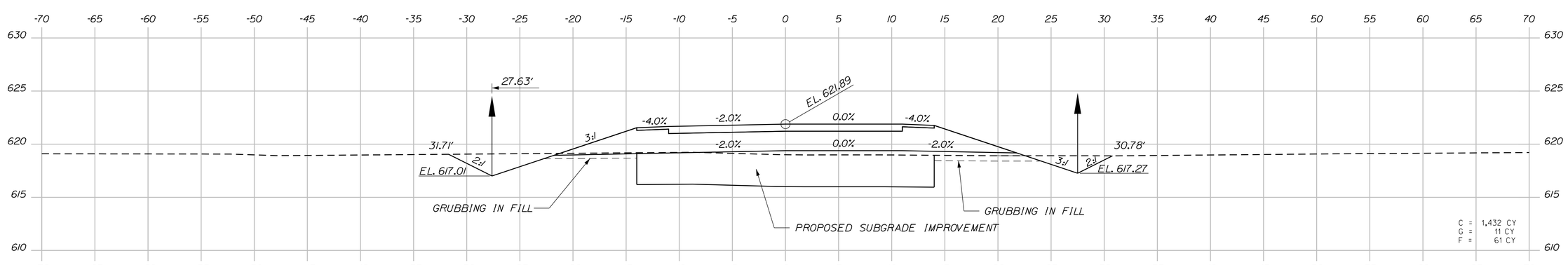

6+00.00

TranSystems

STATE OF MAINE
DEPARTMENT OF TRANSPORTATION

BH-1510(500)X

WIN 15105.00

BRIDGE NO. 3248

BRIDGE PLANS

STATE OF MAINE
EVAN C. LOWELL
NO. 9065
PROFESSIONAL ENGINEER
6-17-13

PROJ. MANAGER	S. BODGE		
DESIGN-DETAILED	T. SANDELL	T. SANDELL	05/2013
CHECKED-REVIEWED	D. WILK	E. LOWELL	
DESIGN2-DETAILED2			
DESIGN3-DETAILED3			
REVISIONS 1			
REVISIONS 2			
REVISIONS 3			
REVISIONS 4			
FIELD CHANGES			

SIGNATURE
9065
P.E. NUMBER
6/17/2013
DATE

MARTIN MEMORIAL BRIDGE
ANDROSCOGGIN RIVER
RUMFORD OXFORD COUNTY

ROUTE 232
CROSS SECTIONS

SHEET NUMBER
26
OF 95

Filename: ...\026_Xsection 6+00 to 7+00.dgn Division: BRIDGE Username: T SANDELL Date:6/17/2013

Sta. 6+00.00 to Sta. 7+00.00

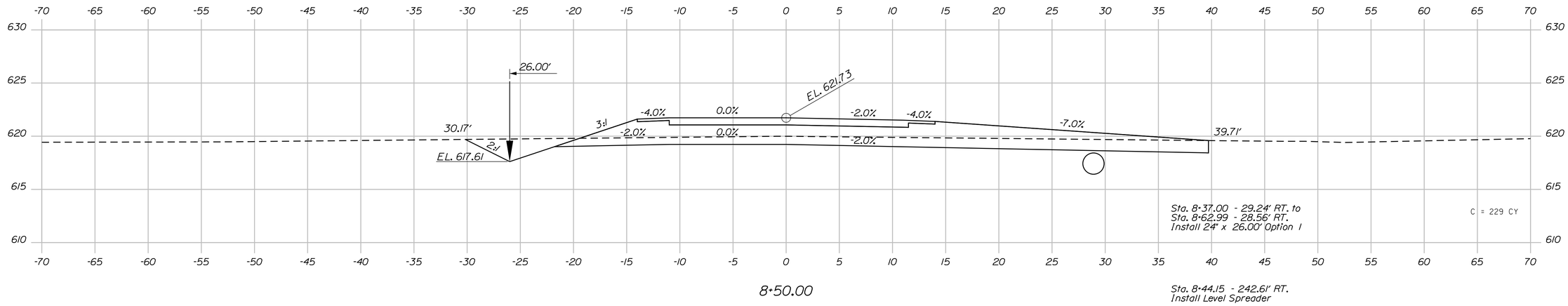

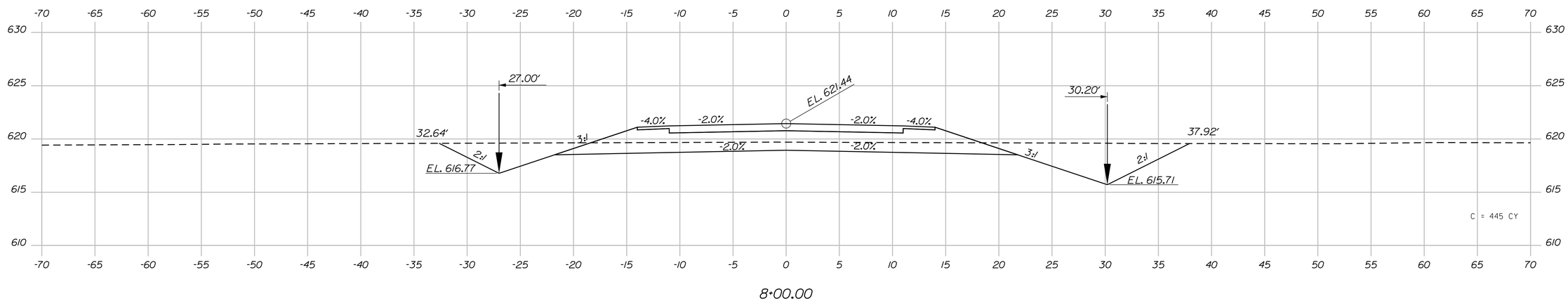

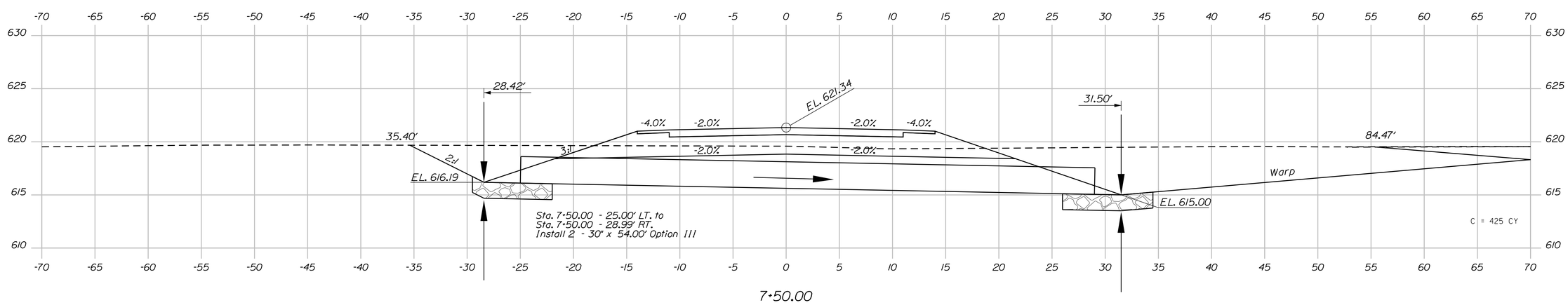

TranSystems

STATE OF MAINE
DEPARTMENT OF TRANSPORTATION

BH-1510(500)X

WIN 15105.00

BRIDGE NO. 3248

BRIDGE PLANS

STATE OF MAINE
EVAN C. LOWELL
NO. 9065
PROFESSIONAL ENGINEER

6-17-13

PROJ. MANAGER	S. BRIDGE	BY	DATE
DESIGN-DETAILED	T. SANDELL	T. SANDELL	05/2013
CHECKED-REVIEWED	D. WILK	E. LOWELL	
DESIGN2-DETAILED2			
DESIGN3-DETAILED3			
REVISIONS 1			
REVISIONS 2			
REVISIONS 3			
REVISIONS 4			
FIELD CHANGES			

SIGNATURE

9065
P.E. NUMBER

6/17/2013
DATE

MARTIN MEMORIAL BRIDGE
ANDROSCOGGIN RIVER
RUMFORD OXFORD COUNTY

ROUTE 232
CROSS SECTIONS

SHEET NUMBER
27
OF 95

Filename: ...\027_Xsection 7+50 to 8+50.dgn Division: BRIDGE Username: T SANDELL Date:6/17/2013

Sta. 7+50.00 to Sta. 8+50.00

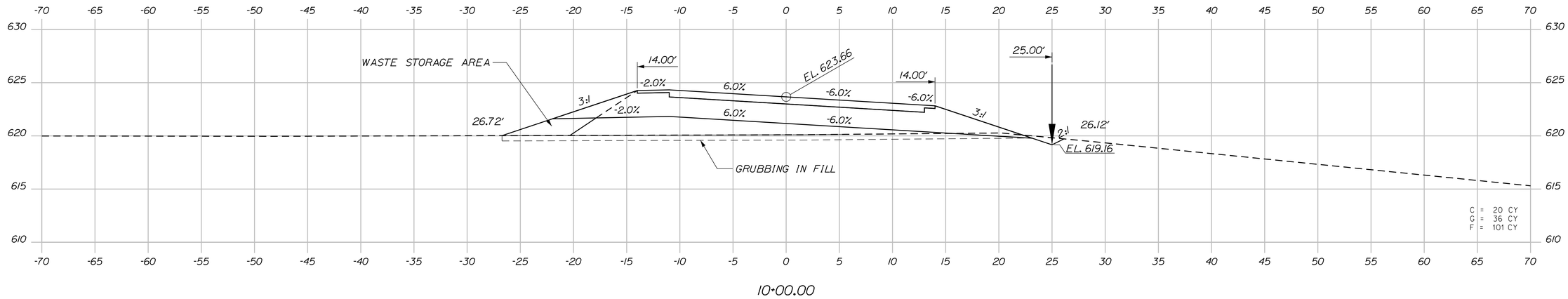

10+00.00

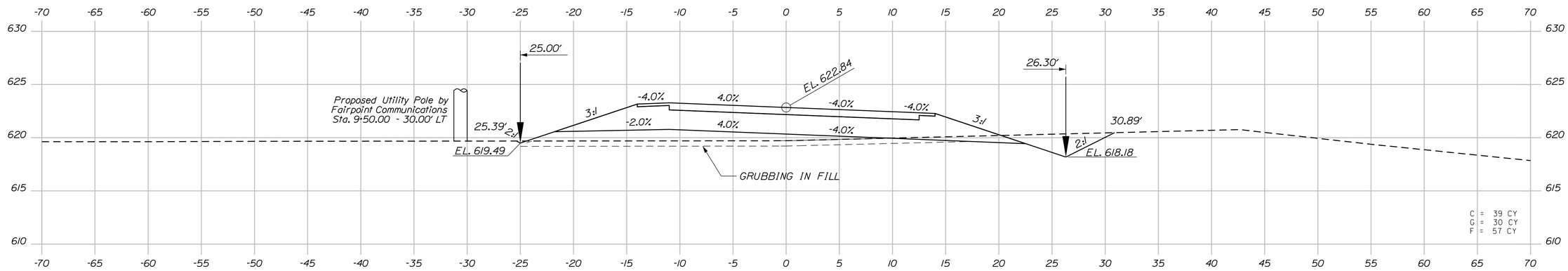

9+50.00

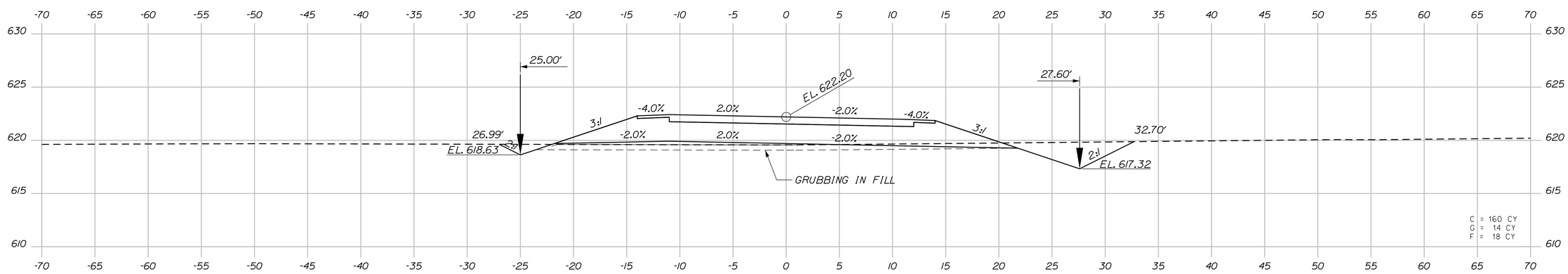

9+00.00

TranSystems

STATE OF MAINE
DEPARTMENT OF TRANSPORTATION

BH-1510(500)X

WIN 15105.00

BRIDGE NO. 3248

BRIDGE PLANS

STATE OF MAINE EVAN C. LOWELL NO. 9065 PROFESSIONAL ENGINEER

PROJ. MANAGER	S. BODGE	BY	DATE
DESIGN-DETAILED	T. SANDELL	T. SANDELL	05/2013
CHECKED-REVIEWED	D. WILK	E. LOWELL	
DESIGN2-DETAILED2			
DESIGN3-DETAILED3			
REVISIONS: 1			
REVISIONS: 2			
REVISIONS: 3			
REVISIONS: 4			
FIELD CHANGES			

SIGNATURE

9065

P.E. NUMBER

6/17/2013

DATE

MARTIN MEMORIAL BRIDGE
ANDROSCOGGIN RIVER
RUMFORD OXFORD COUNTY

ROUTE 232
CROSS SECTIONS

SHEET NUMBER

28

OF 95

Filename: ...\028_Xsection 9+00 to 10+00.dgn Division: BRIDGE Username: T SANDELL Date:6/17/2013

Sta. 9+00.00 to Sta. 10+00.00

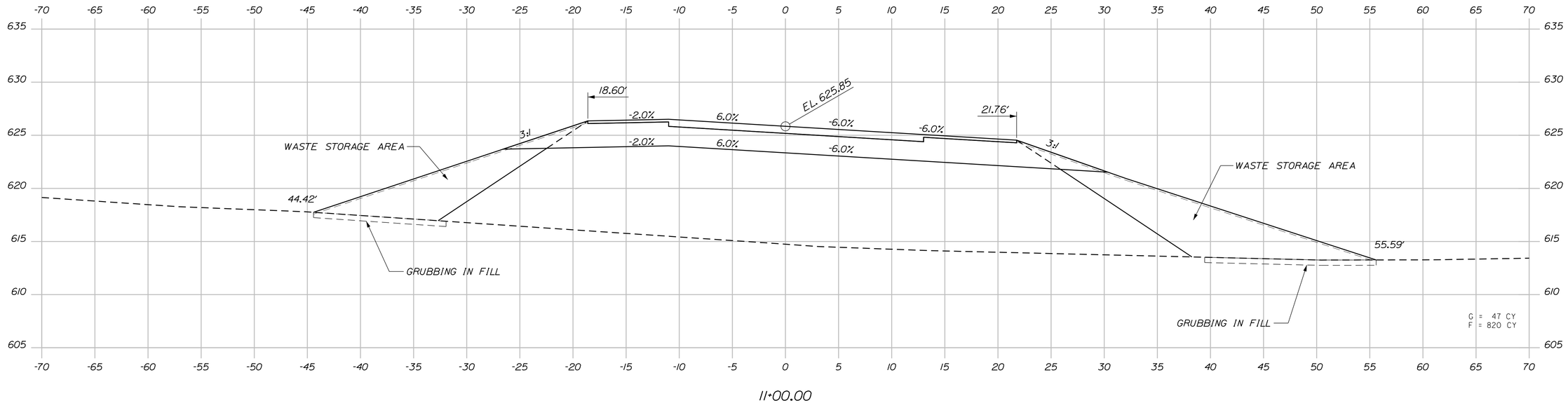

11+00.00

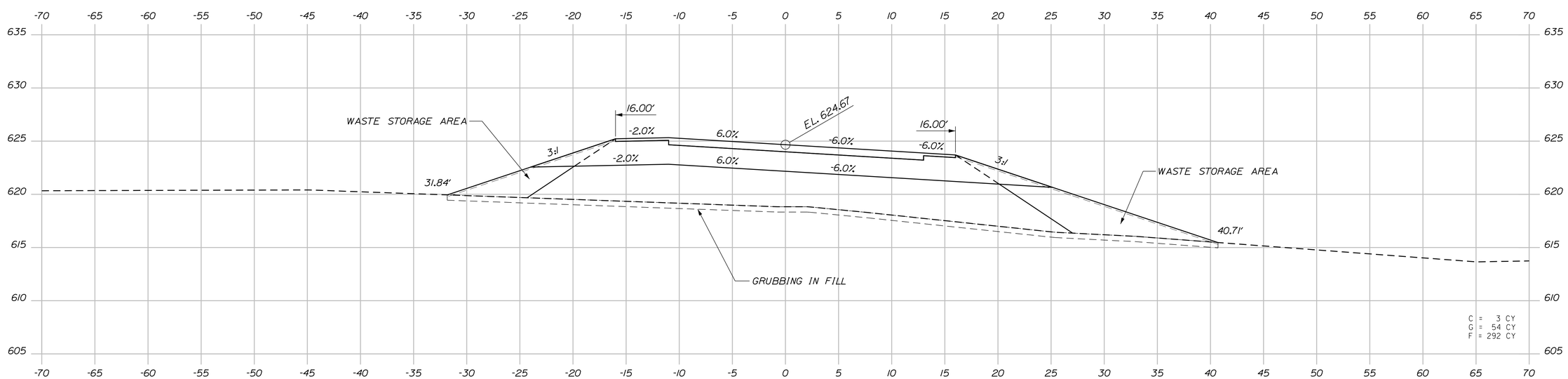

10+50.00

TranSystems

STATE OF MAINE
DEPARTMENT OF TRANSPORTATION

BH-1510(500)X

WIN 15105.00

BRIDGE NO. 3248

BRIDGE PLANS

STATE OF MAINE
EVAN C. LOWELL
NO. 9065
PROFESSIONAL ENGINEER
6-17-13

PROJ. MANAGER	S. BOOGE	BY	DATE
DESIGN-DETAILED	T. SANDELL	T. SANDELL	05/2013
CHECKED-REVIEWED	D. WILK	E. LOWELL	
DESIGN2-DETAILED2			
DESIGN3-DETAILED3			
REVISIONS 1			
REVISIONS 2			
REVISIONS 3			
REVISIONS 4			
FIELD CHANGES			

SIGNATURE
9065
P.E. NUMBER
6/17/2013
DATE

MARTIN MEMORIAL BRIDGE
ANDROSCOGGIN RIVER
RUMFORD OXFORD COUNTY

ROUTE 232
CROSS SECTIONS

SHEET NUMBER
29
OF 95

Sta. 10+50.00 to Sta. 11+00.00

Filename: ...\029_Xsection 10+50 to 11+00.dgn Division: BRIDGE Username: T SANDELL Date:6/17/2013

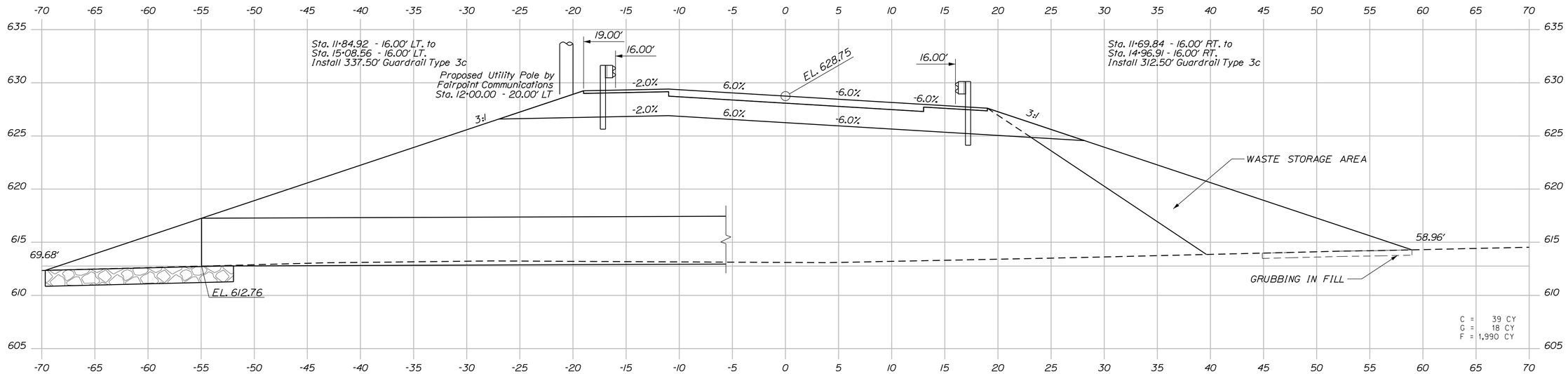

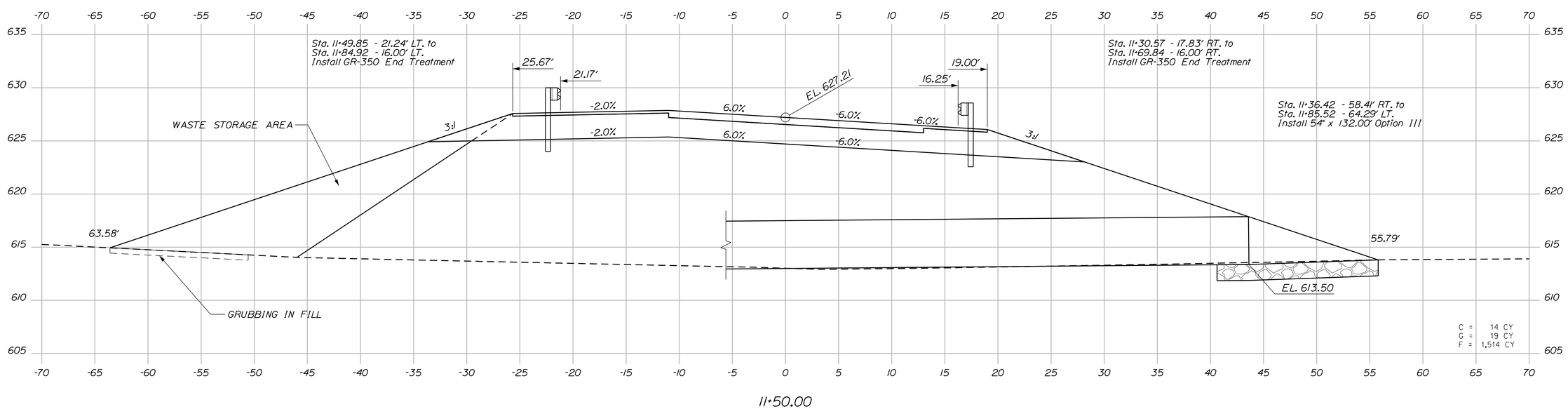

TranSystems

STATE OF MAINE
DEPARTMENT OF TRANSPORTATION

BH-1510(500)X

WIN 15105.00

BRIDGE NO. 3248

BRIDGE PLANS

STATE OF MAINE
EVAN C. LOWELL
NO. 9065
PROFESSIONAL ENGINEER

		BY	DATE
PROJ. MANAGER	S. BODGE		
DESIGN-DETAILED	T. SANDELL	T. SANDELL	05/2013
CHECKED-REVIEWED	D. WILK	E. LOWELL	
DESIGN2-DETAILED2			
DESIGN3-DETAILED3			
REVISIONS 1			
REVISIONS 2			
REVISIONS 3			
REVISIONS 4			
FIELD CHANGES			

SIGNATURE

9065
P.E. NUMBER

6/17/2013
DATE

MARTIN MEMORIAL BRIDGE
ANDROSCOGGIN RIVER
RUMFORD OXFORD COUNTY

ROUTE 232
CROSS SECTIONS

SHEET NUMBER
30
OF 95

Filename: ...\030_Xsection 11+50 to 12+00.dgn Division: BRIDGE Username: T SANDELL Date:6/17/2013

Sta. 11+50.00 to Sta. 12+00.00

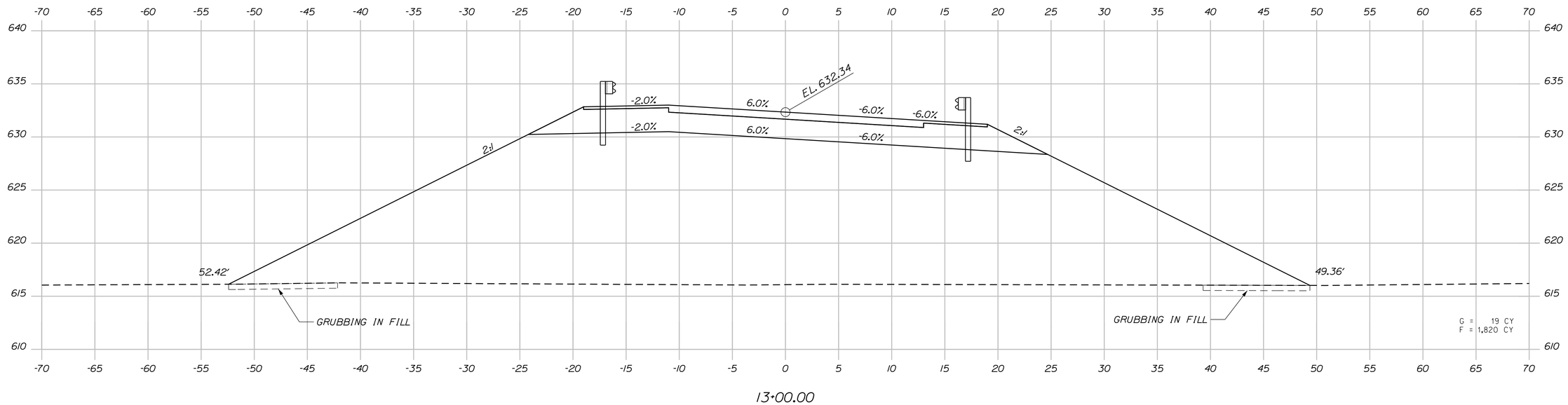

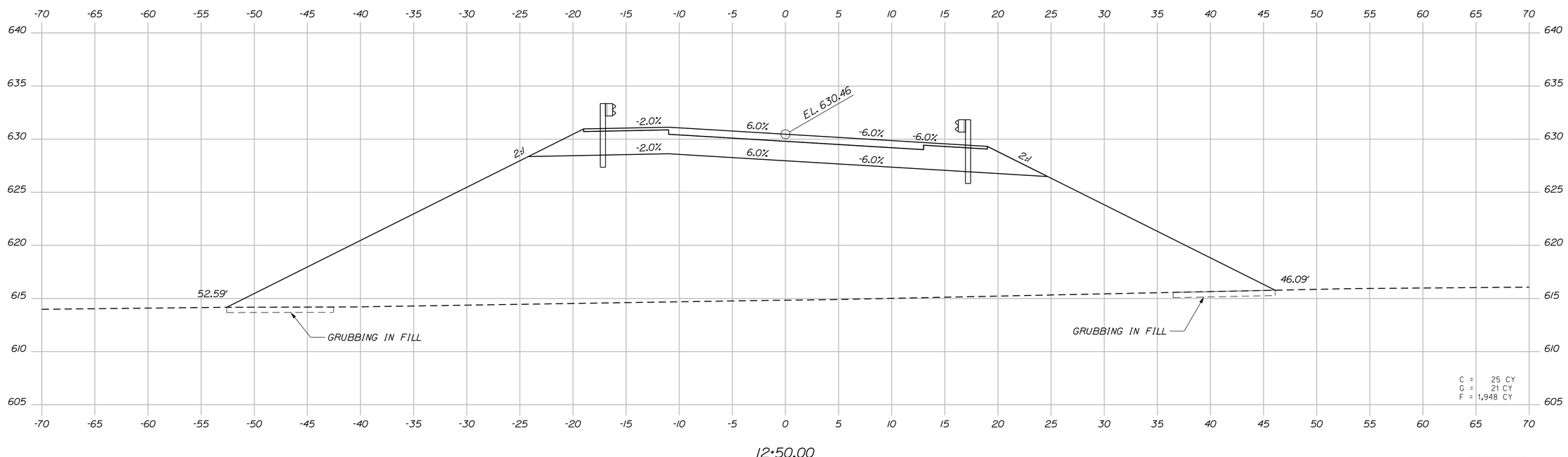

TranSystems

STATE OF MAINE
DEPARTMENT OF TRANSPORTATION

BH-1510(500)X

WIN 15105.00

BRIDGE NO. 3248

BRIDGE PLANS

STATE OF MAINE
EVAN C. LOWELL
NO. 9065
LICENSED
PROFESSIONAL ENGINEER

6-17-13

PROJ. MANAGER	S. BOOGE	BY	DATE
DESIGN-DETAILED	T. SANDELL	T. SANDELL	05/2013
CHECKED-REVIEWED	D. WILK	E. LOWELL	
DESIGN2-DETAILED2			
DESIGN3-DETAILED3			
REVISIONS 1			
REVISIONS 2			
REVISIONS 3			
REVISIONS 4			
FIELD CHANGES			

SIGNATURE

9065
P.E. NUMBER

6/17/2013
DATE

MARTIN MEMORIAL BRIDGE
ANDROSCOGGIN RIVER
RUMFORD OXFORD COUNTY

ROUTE 232
CROSS SECTIONS

SHEET NUMBER

31

OF 95

Sta. 12+50.00 to Sta. 13+00.00

Filename: ...\031_Xsection 12+50 to 13+00.dgn Division: BRIDGE Username: T SANDELL Date:6/17/2013

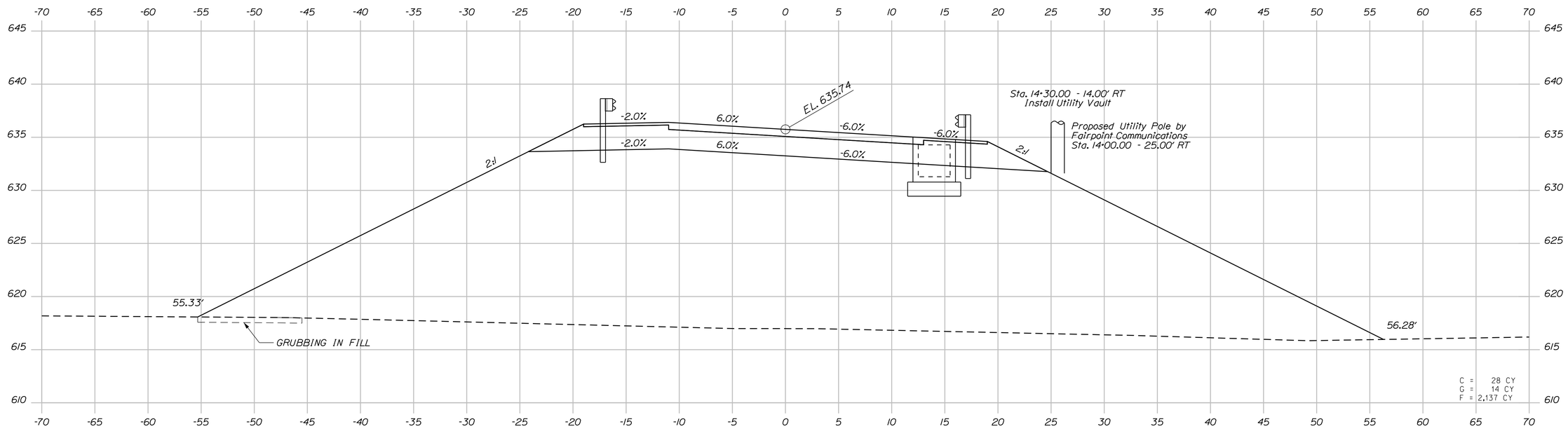

14+00.00

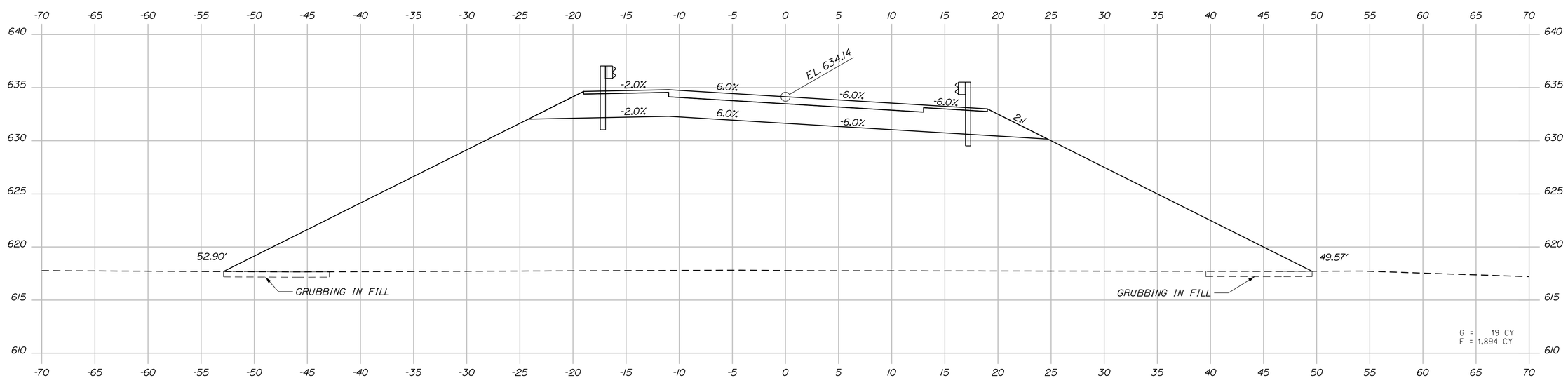

13+50.00

TranSystems

STATE OF MAINE
DEPARTMENT OF TRANSPORTATION

BH-1510(500)X

WIN 15105.00

BRIDGE NO. 3248

BRIDGE PLANS

STATE OF MAINE
EVAN C. LOWELL
NO. 9065
PROFESSIONAL ENGINEER

SIGNATURE		
9065		
P.E. NUMBER		
6/17/2013		
DATE		

PROJ. MANAGER	S. BODGE	BY	DATE
DESIGN-DETAILED	T. SANDELL	T. SANDELL	05/2013
CHECKED-REVIEWED	D. WILK	E. LOWELL	
DESIGN2-DETAILED2			
DESIGN3-DETAILED3			
REVISIONS 1			
REVISIONS 2			
REVISIONS 3			
REVISIONS 4			
FIELD CHANGES			

MARTIN MEMORIAL BRIDGE
ANDROSCOGGIN RIVER
RUMFORD OXFORD COUNTY

ROUTE 232
CROSS SECTIONS

SHEET NUMBER
32
OF 95

Filename: ...\032_Xsection 13+50 to 14+00.dgn Division: BRIDGE Username: T SANDELL Date:6/17/2013

Sta. 13+50.00 to Sta. 14+00.00

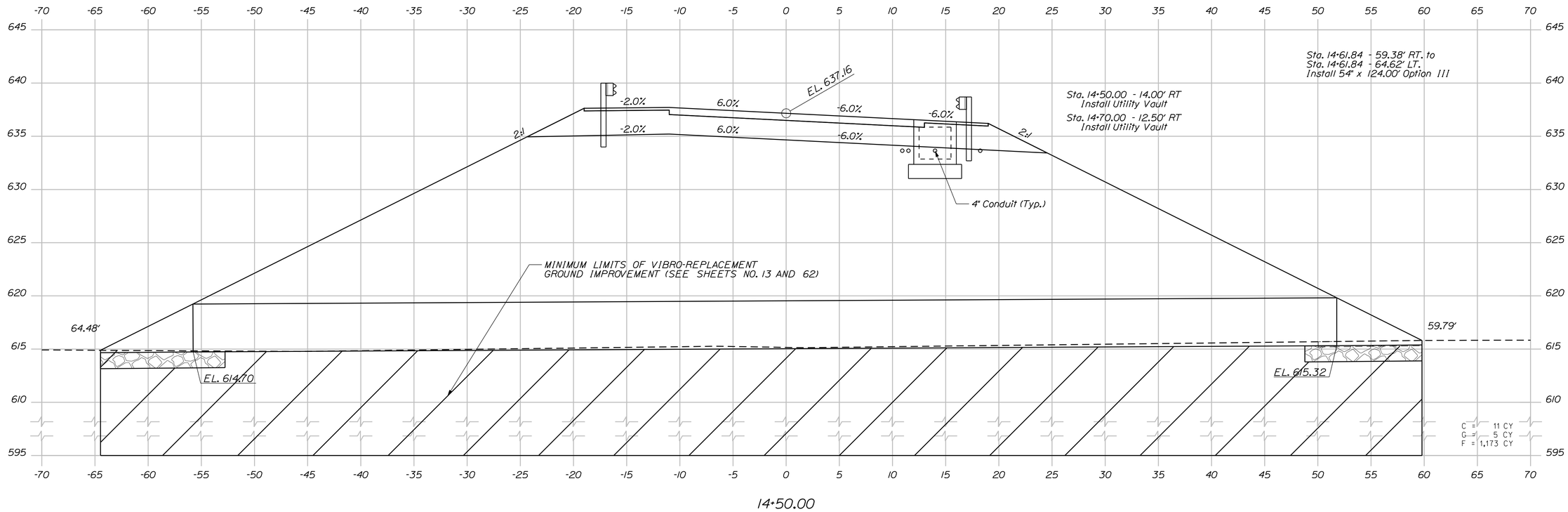

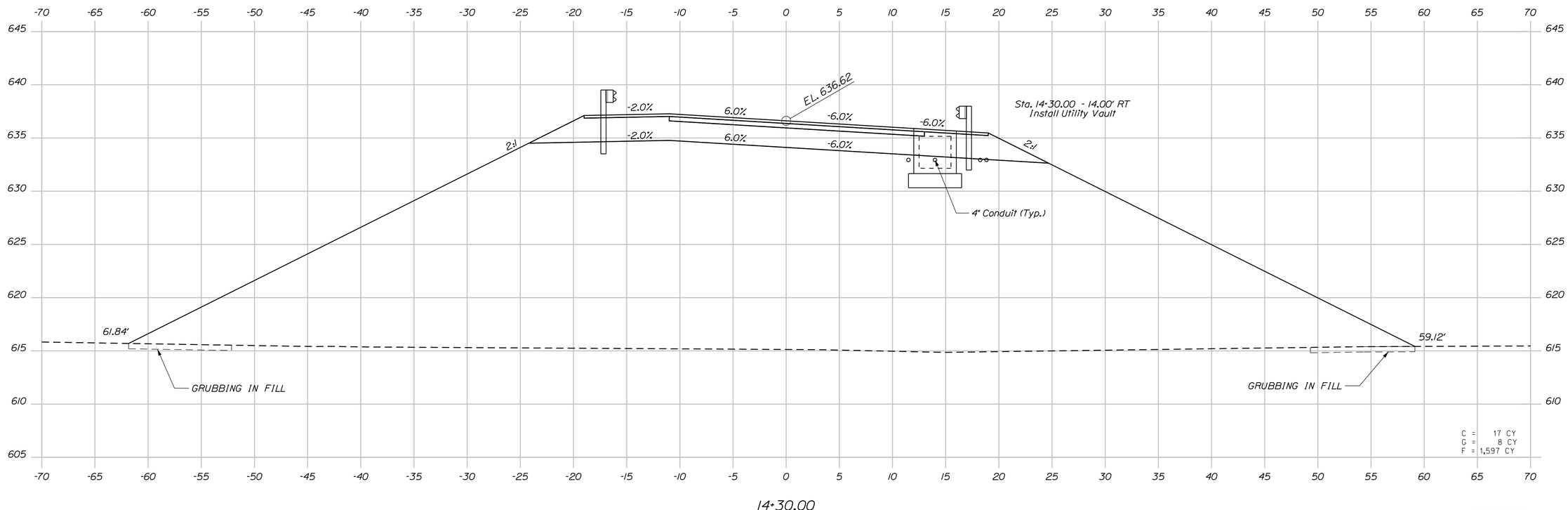

STATE OF MAINE
DEPARTMENT OF TRANSPORTATION

BH-1510(500)X

WIN 15105.00

BRIDGE NO. 3248

BRIDGE PLANS

STATE OF MAINE
EVAN C. LOWELL
NO. 9065
PROFESSIONAL ENGINEER
6-17-13

		BY	DATE
PROJ. MANAGER	S. BOOGE		
DESIGN-DETAILED	T. SANDELL	T. SANDELL	05/2013
CHECKED-REVIEWED	D. WILK	E. LOWELL	
DESIGN2-DETAILED2			
DESIGN3-DETAILED3			
REVISIONS 1			
REVISIONS 2			
REVISIONS 3			
REVISIONS 4			
FIELD CHANGES			

SIGNATURE

9065
P.E. NUMBER

6/17/2013
DATE

MARTIN MEMORIAL BRIDGE
ANDROSCOGGIN RIVER
RUMFORD OXFORD COUNTY

ROUTE 232
CROSS SECTIONS

SHEET NUMBER
33
OF 95

TranSystems

Sta. 14+30.00 to Sta. 14+50.00

Filename: ...\033_Xsection 14+30 to 14+50.dgn Division: BRIDGE Username: T SANDELL Date:6/17/2013

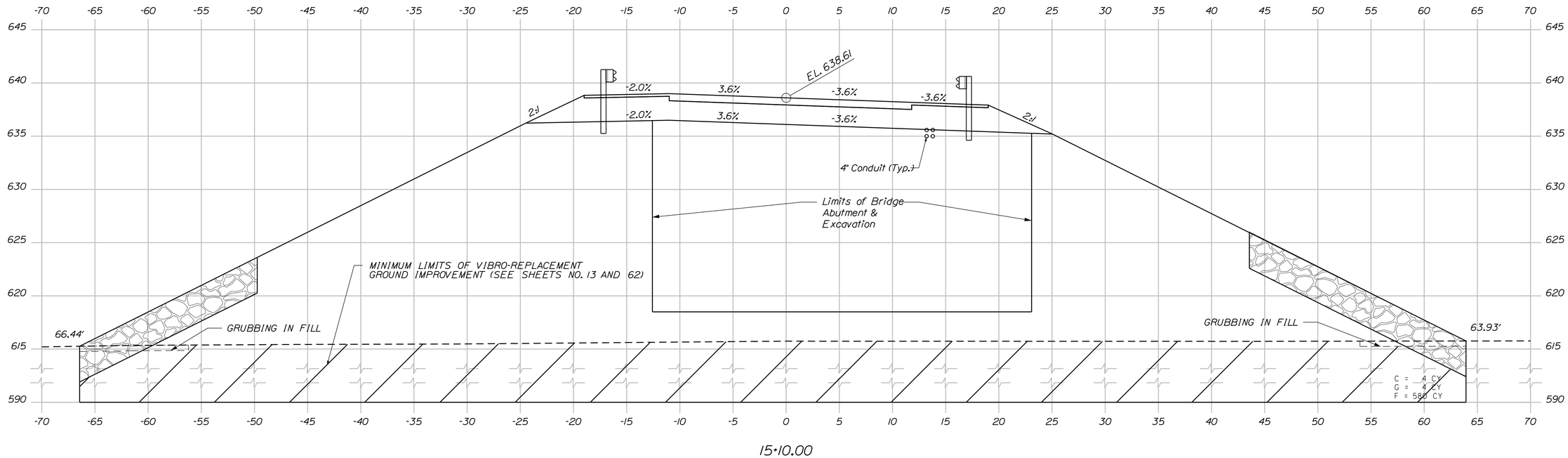

15+10.00

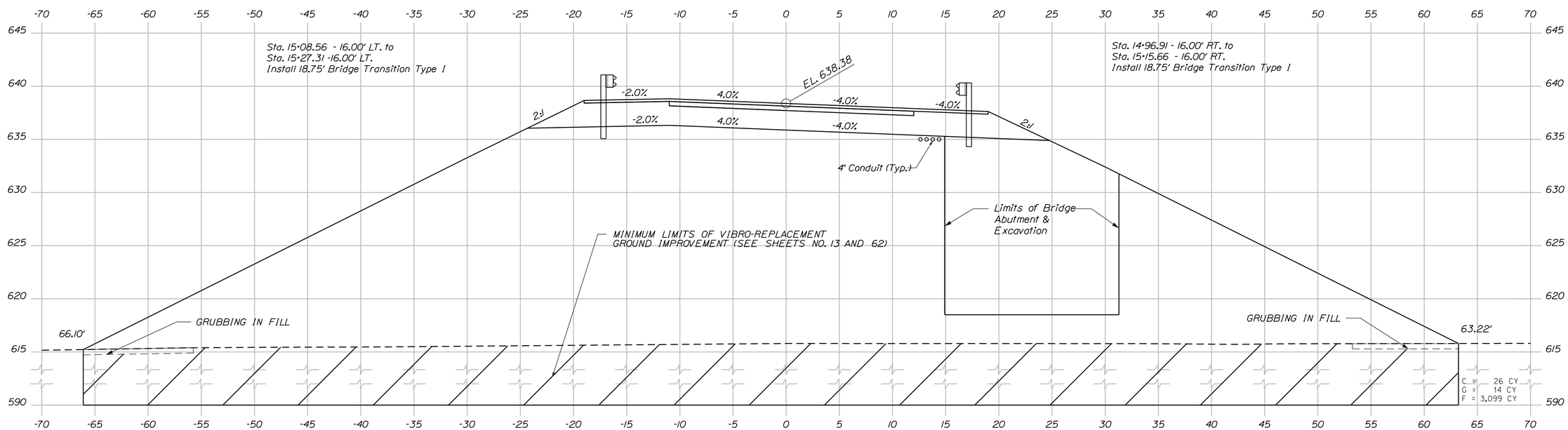

15+00.00

TranSystems

STATE OF MAINE
DEPARTMENT OF TRANSPORTATION

BH-1510(500)X

WIN 15105.00

BRIDGE NO. 3248

BRIDGE PLANS

STATE OF MAINE EVAN C. LOWELL NO. 9065 PROFESSIONAL ENGINEER

6-17-13

		BY	DATE
PROJ. MANAGER	S. BOOGE		
DESIGN-DETAILED	T. SANDELL	T. SANDELL	05/2013
CHECKED-REVIEWED	D. WILK	E. LOWELL	
DESIGN2-DETAILED2			
DESIGN3-DETAILED3			
REVISIONS 1			
REVISIONS 2			
REVISIONS 3			
REVISIONS 4			
FIELD CHANGES			

SIGNATURE

9065
P.E. NUMBER

6/17/2013
DATE

MARTIN MEMORIAL BRIDGE
ANDROSCOGGIN RIVER
RUMFORD OXFORD COUNTY

ROUTE 232
CROSS SECTIONS

SHEET NUMBER
34
OF 95

Sta. 15+00.00 to Sta. 15+10.00

Filename: ...\034_Xsection 15+00 to 15+10.dgn Division: BRIDGE Username: T SANDELL Date:6/17/2013

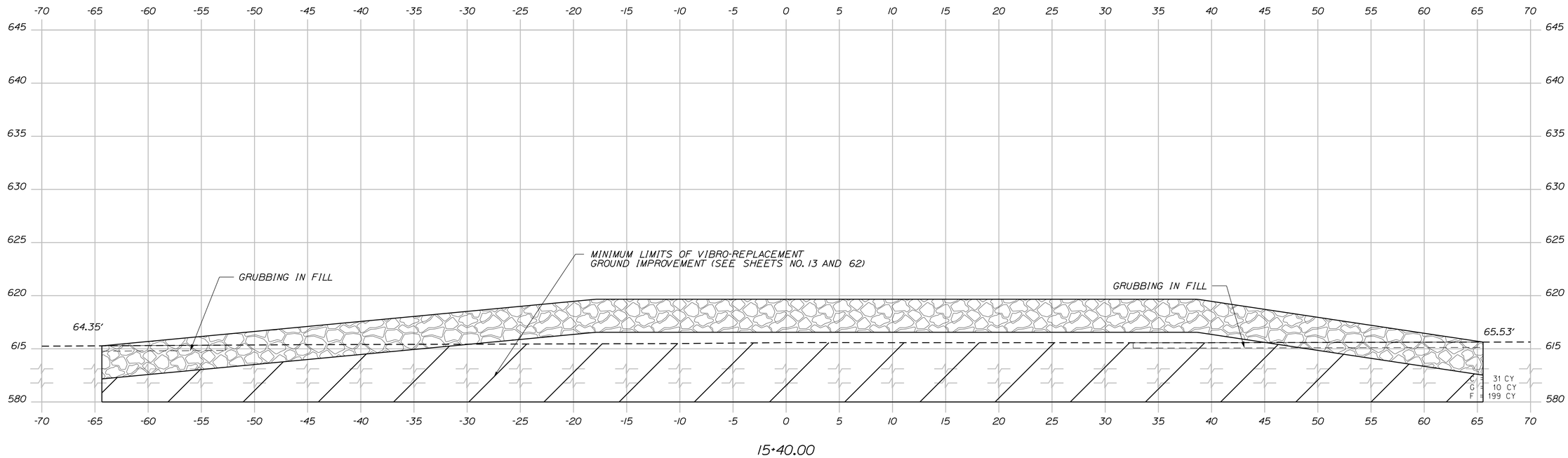

15+40.00

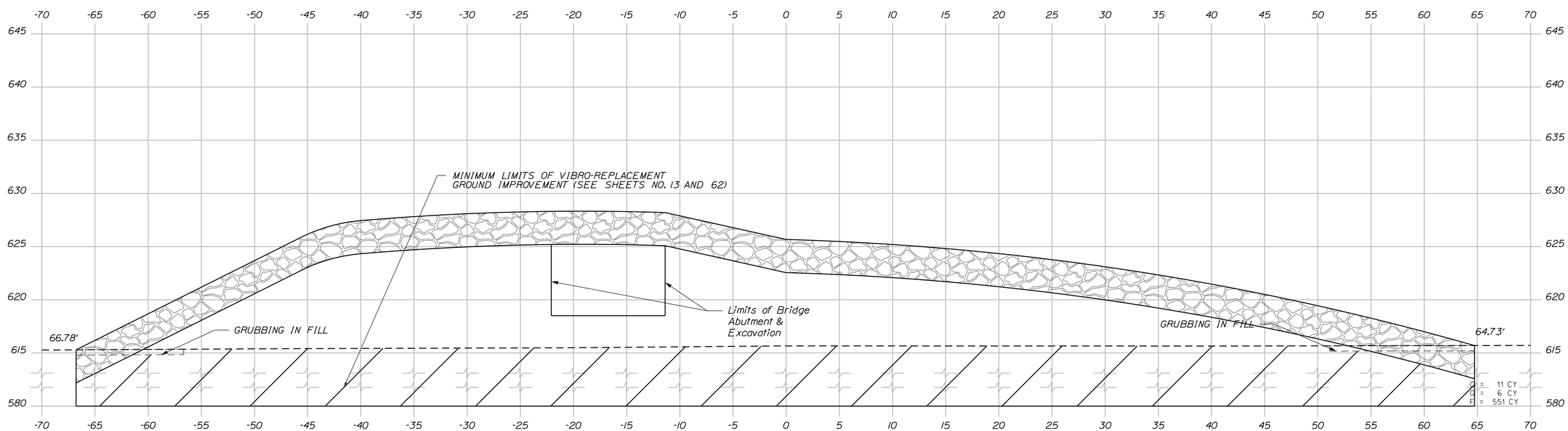

15+25.00

TranSystems

STATE OF MAINE
DEPARTMENT OF TRANSPORTATION

BH-1510(500)X

WIN 15105.00

BRIDGE NO. 3248

BRIDGE PLANS

STATE OF MAINE EVAN C. LOWELL NO. 9065 PROFESSIONAL ENGINEER

6-17-13

		BY	DATE
PROJ. MANAGER	S. BOOGE		
DESIGN-DETAILED	T. SANDELL	T. SANDELL	05/2013
CHECKED-REVIEWED	D. WILK	E. LOWELL	
DESIGN2-DETAILED2			
DESIGN3-DETAILED3			
REVISIONS 1			
REVISIONS 2			
REVISIONS 3			
REVISIONS 4			
FIELD CHANGES			

SIGNATURE

9065

P.E. NUMBER

6/17/2013

DATE

MARTIN MEMORIAL BRIDGE
ANDROSCOGGIN RIVER
RUMFORD OXFORD COUNTY

ROUTE 232
CROSS SECTIONS

SHEET NUMBER

35

OF 95

Sta. 15+25.00 to Sta. 15+40.00

Filename: ...\035_Xsection 15+25 to 15+40.dgn Division: BRIDGE Username: T SANDELL Date:6/17/2013

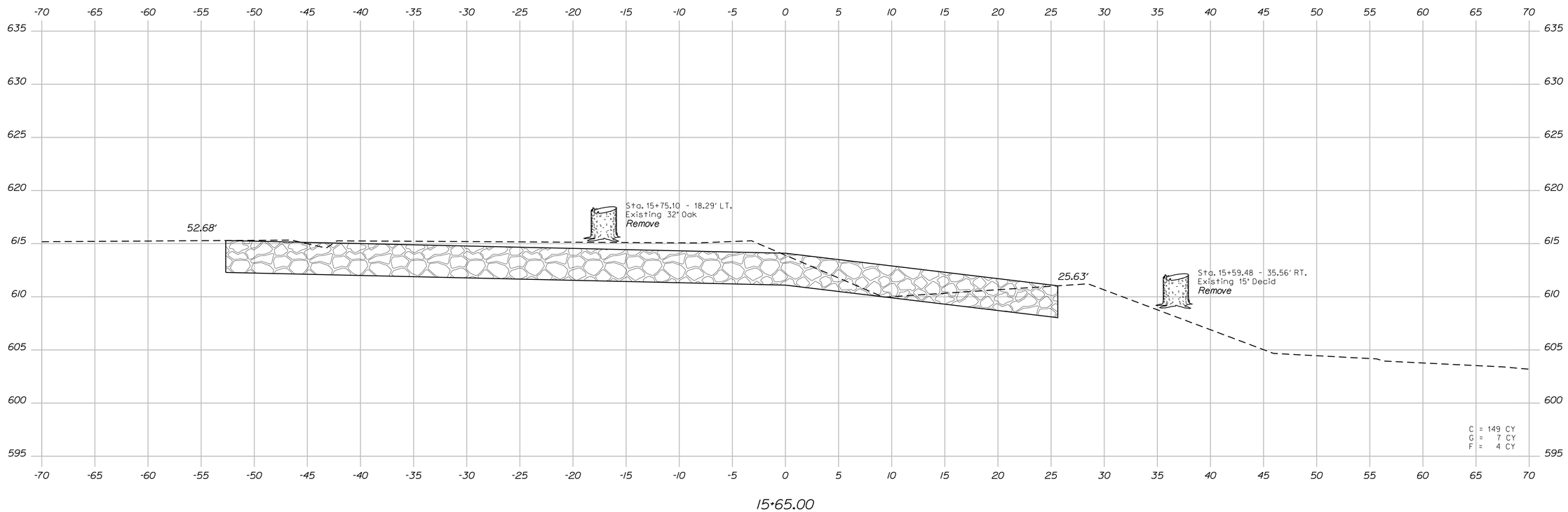

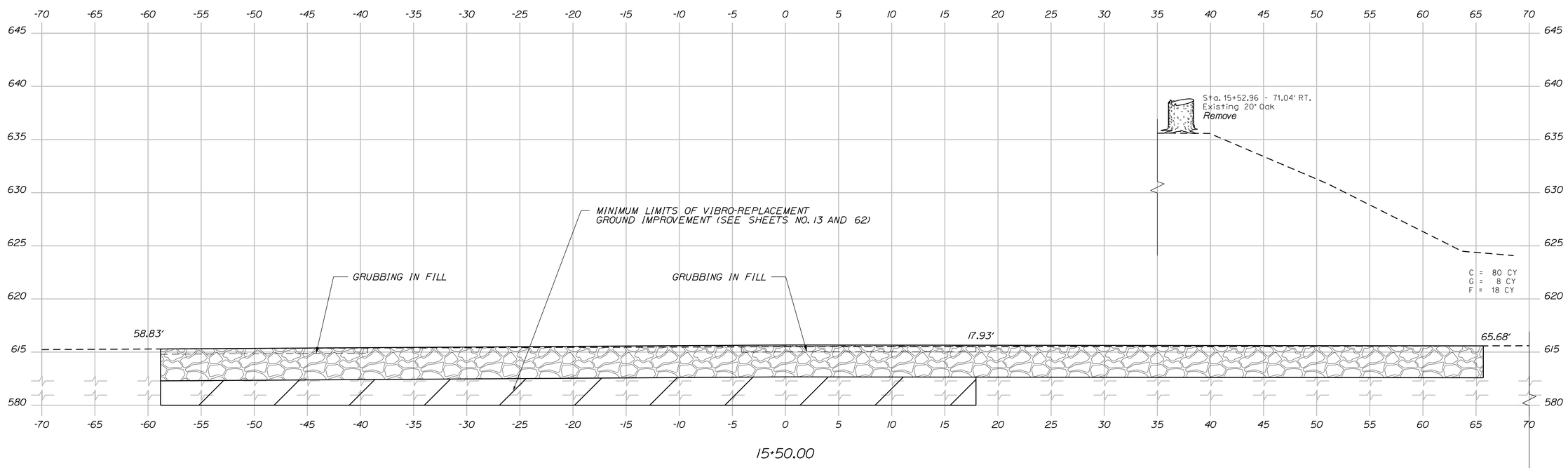

TranSystems

STATE OF MAINE
DEPARTMENT OF TRANSPORTATION

BH-1510(500)X

WIN 15105.00

BRIDGE NO. 3248

BRIDGE PLANS

STATE OF MAINE
EVAN C. LOWELL
NO. 9065
PROFESSIONAL ENGINEER

PROJ. MANAGER	S. BOOGE	BY	DATE
DESIGN-DETAILED	T. SANDELL	T. SANDELL	05/2013
CHECKED-REVIEWED	D. WILK	E. LOWELL	
DESIGN2-DETAILED2			
DESIGN3-DETAILED3			
REVISIONS 1			
REVISIONS 2			
REVISIONS 3			
REVISIONS 4			
FIELD CHANGES			

SIGNATURE

9065
P.E. NUMBER

6/17/2013
DATE

MARTIN MEMORIAL BRIDGE
ANDROSCOGGIN RIVER
RUMFORD OXFORD COUNTY

ROUTE 232
CROSS SECTIONS

SHEET NUMBER
36
OF 95

Sta. 15+50.00 to 15+65.00

Filename: ...\036_Xsection 15+50 to 15+65.dgn Division: BRIDGE Username: T SANDELL Date:6/17/2013

Filename: ...\Road\037_Xsection 19+80.dgn Division: BRIDGE Username: T SANDELL Date:6/17/2013

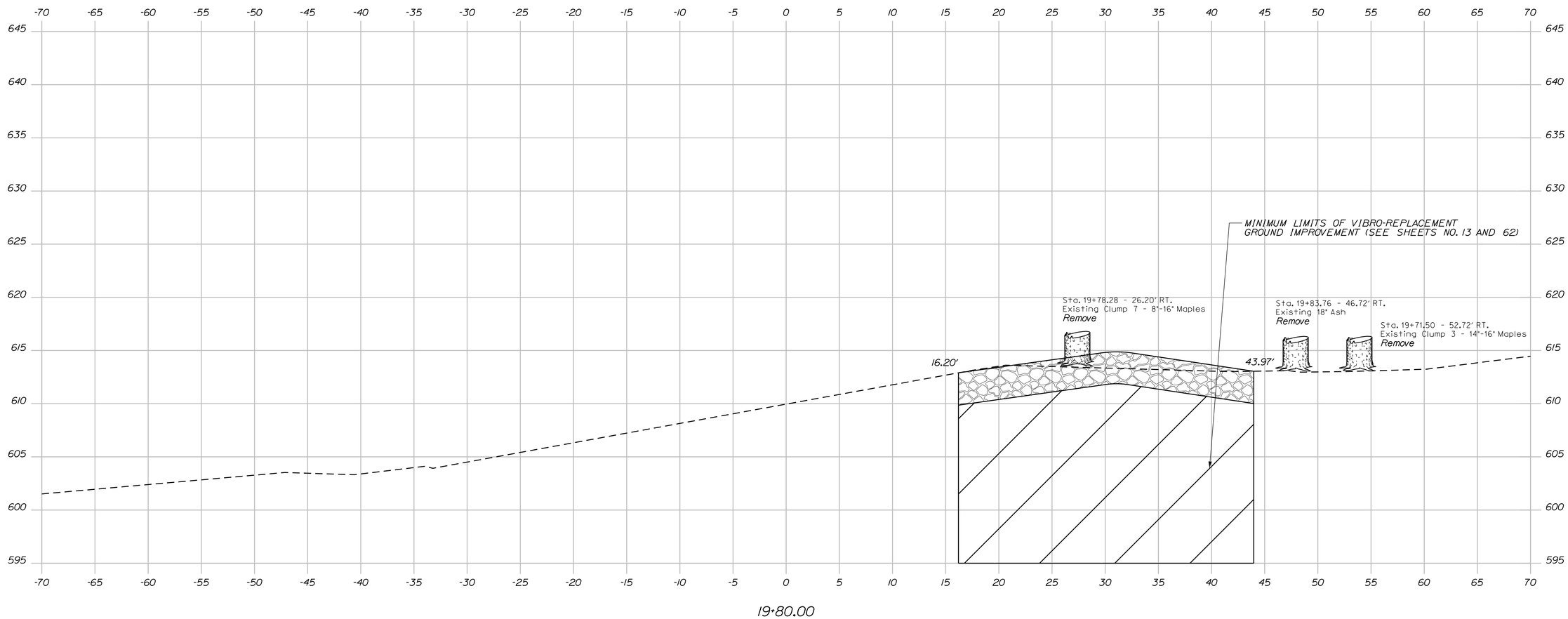

TranSystems

STATE OF MAINE
DEPARTMENT OF TRANSPORTATION

BH-1510(500)X

WIN 15105.00

BRIDGE NO. 3248

BRIDGE PLANS

STATE OF MAINE EVAN C. LOWELL NO. 9065 LICENSED PROFESSIONAL ENGINEER

6-17-13

PROJ. MANAGER	S. BODGE	BY	DATE
DESIGN-DETAILED	T. SANDELL	T. SANDELL	05/2013
CHECKED-REVIEWED	D. WILK	E. LOWELL	
DESIGN2-DETAILED2			
DESIGN3-DETAILED3			
REVISIONS 1			
REVISIONS 2			
REVISIONS 3			
REVISIONS 4			
FIELD CHANGES			

SIGNATURE

9065

P.E. NUMBER

6/17/2013

DATE

MARTIN MEMORIAL BRIDGE
ANDROSCOGGIN RIVER
RUMFORD OXFORD COUNTY

ROUTE 232
CROSS SECTIONS

SHEET NUMBER

37

OF 95

Sta. 19+80.00

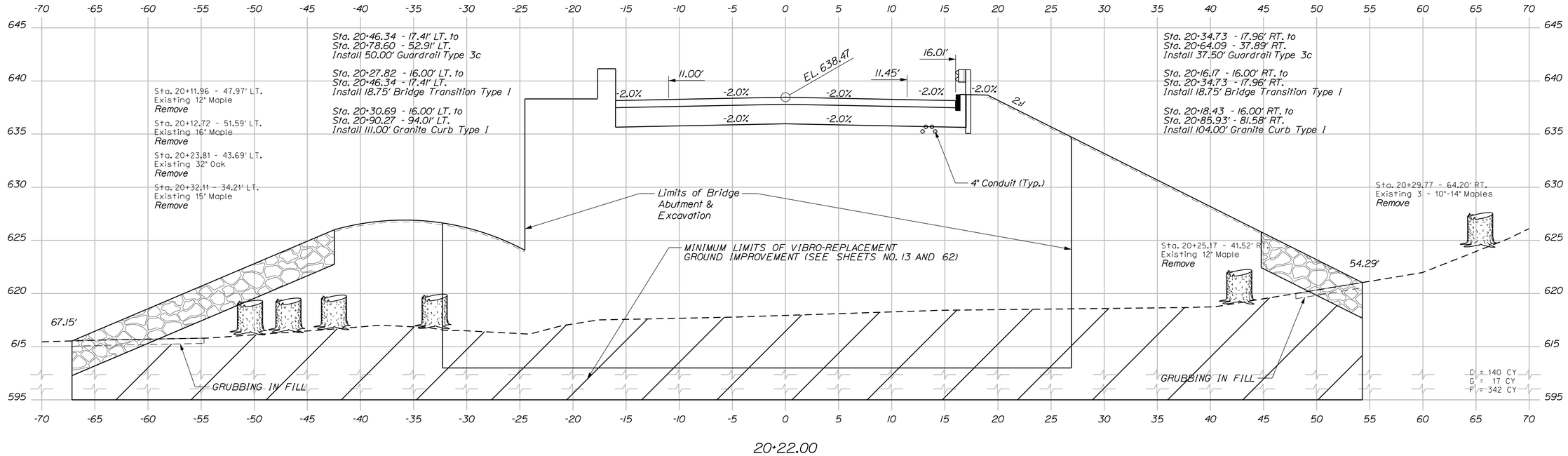

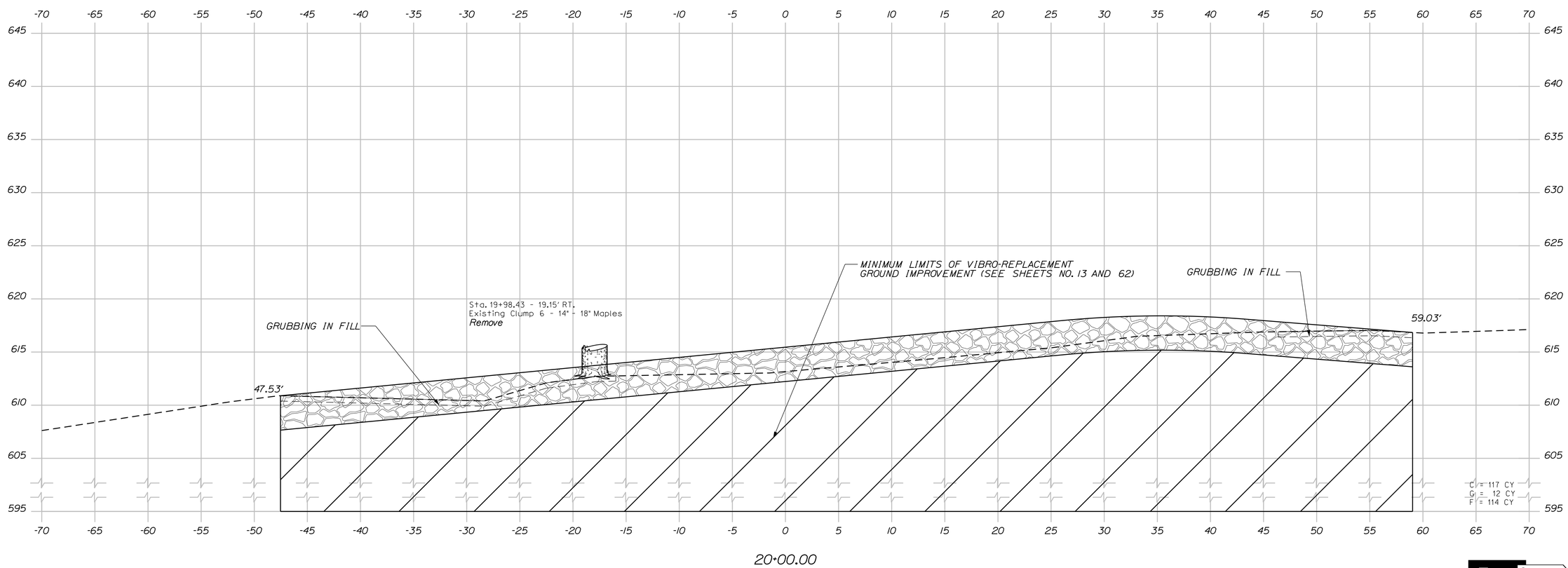

STATE OF MAINE
DEPARTMENT OF TRANSPORTATION

BH-1510(500)X

WIN 15105.00

BRIDGE NO. 3248

BRIDGE PLANS

STATE OF MAINE
EVAN C. LOWELL
NO. 9065
PROFESSIONAL ENGINEER
6-17-13

PROJ. MANAGER	S. BODGE	BY	DATE
DESIGN-DETAILED	T. SANDELL	T. SANDELL	05/2013
CHECKED-REVIEWED	D. WILK	E. LOWELL	
DESIGN2-DETAILED2			
DESIGN3-DETAILED3			
REVISIONS: 1			
REVISIONS: 2			
REVISIONS: 3			
REVISIONS: 4			
FIELD CHANGES			

SIGNATURE

9065
P.E. NUMBER

6/17/2013
DATE

MARTIN MEMORIAL BRIDGE
ANDROSCOGGIN RIVER
RUMFORD OXFORD COUNTY

ROUTE 232
CROSS SECTIONS

SHEET NUMBER
38
OF 95

TranSystems

Filename: ...\038_Xsection 20+00 to 20+22.dgn Division: BRIDGE Username: T SANDELL Date:6/17/2013

Sta. 20+00.00 to Sta. 20+22.00

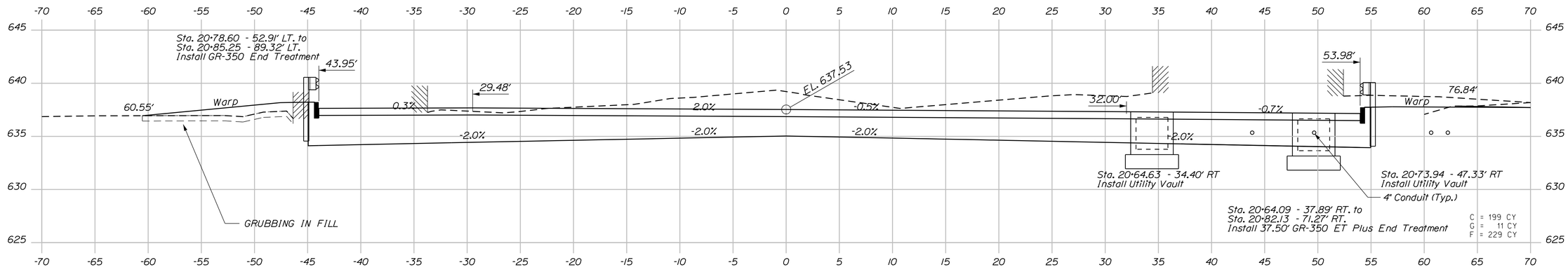

20+75.00
Match Line - Sta. 20+75.00

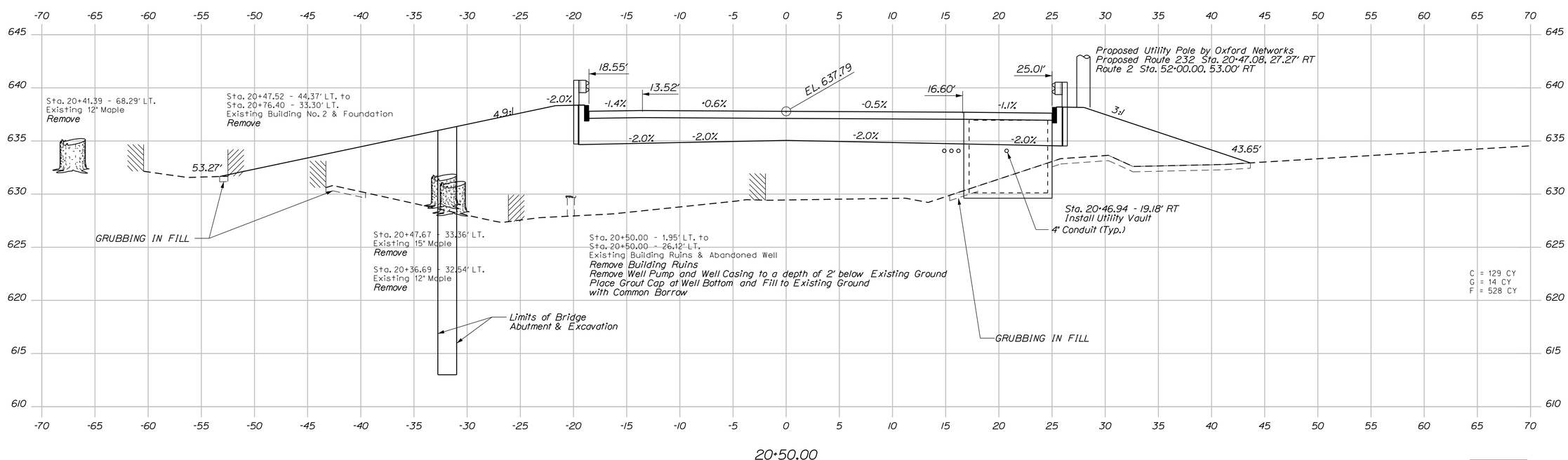

20+50.00

TranSystems

STATE OF MAINE
DEPARTMENT OF TRANSPORTATION

BH-1510(500)X

WIN 15105.00

BRIDGE NO. 3248

BRIDGE PLANS

STATE OF MAINE
EVAN C. LOWELL
NO. 9065
PROFESSIONAL ENGINEER
6-17-13

SIGNATURE		
9065	P.E. NUMBER	
6/17/2013	DATE	

		BY	DATE
PROJ. MANAGER	S. BOOGE		
DESIGN-DETAILED	T. SANDELL	T. SANDELL	05/2013
CHECKED-REVIEWED	D. WILK	E. LOWELL	
DESIGN2-DETAILED2			
DESIGN3-DETAILED3			
REVISIONS 1			
REVISIONS 2			
REVISIONS 3			
REVISIONS 4			
FIELD CHANGES			

MARTIN MEMORIAL BRIDGE
ANDROSCOGGIN RIVER
RUMFORD OXFORD COUNTY

ROUTE 232
CROSS SECTIONS

SHEET NUMBER
39
OF 95

Sta. 20+50.00 to Sta. 20+75.00

Filename: ...\039_Xsection 20+50 to 20+75.dgn Division: BRIDGE Username: T SANDELL Date:6/17/2013

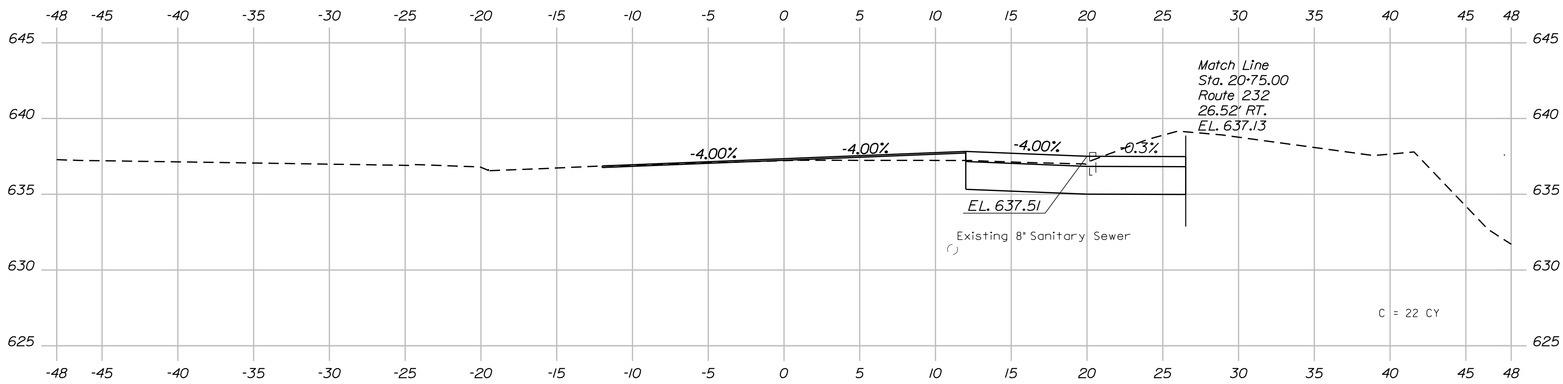

51+75.00

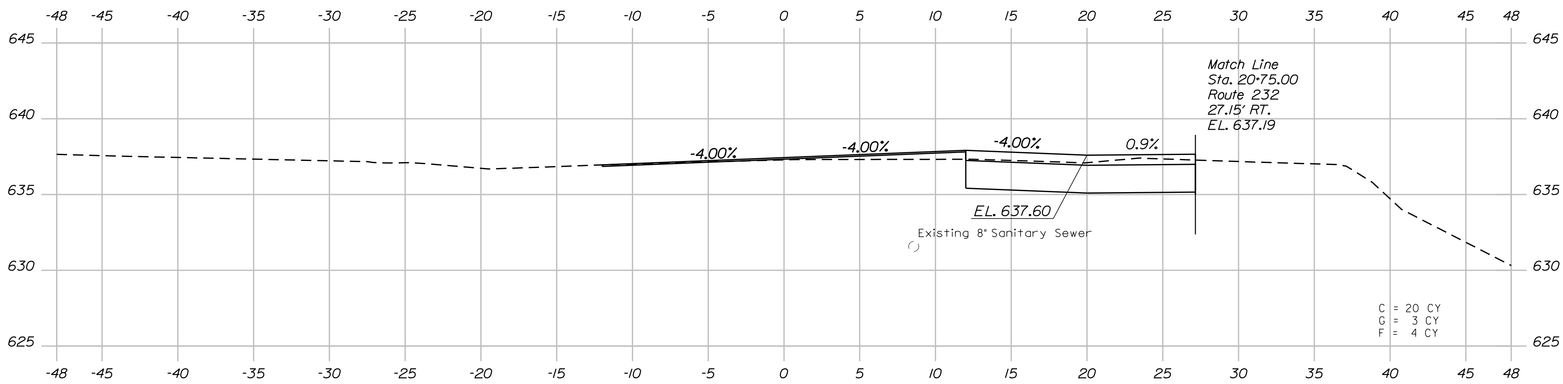

51+50.00

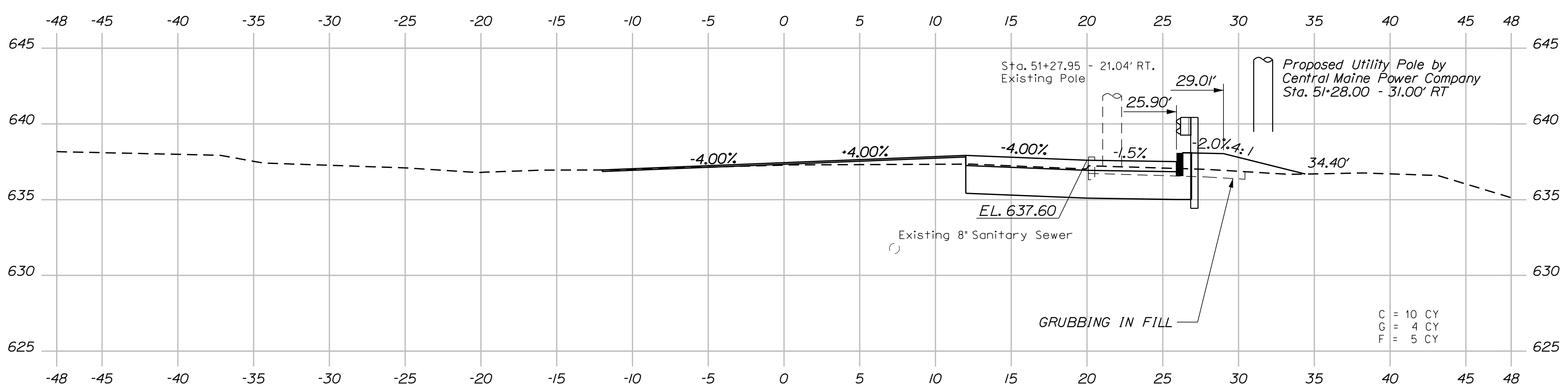

51+25.00

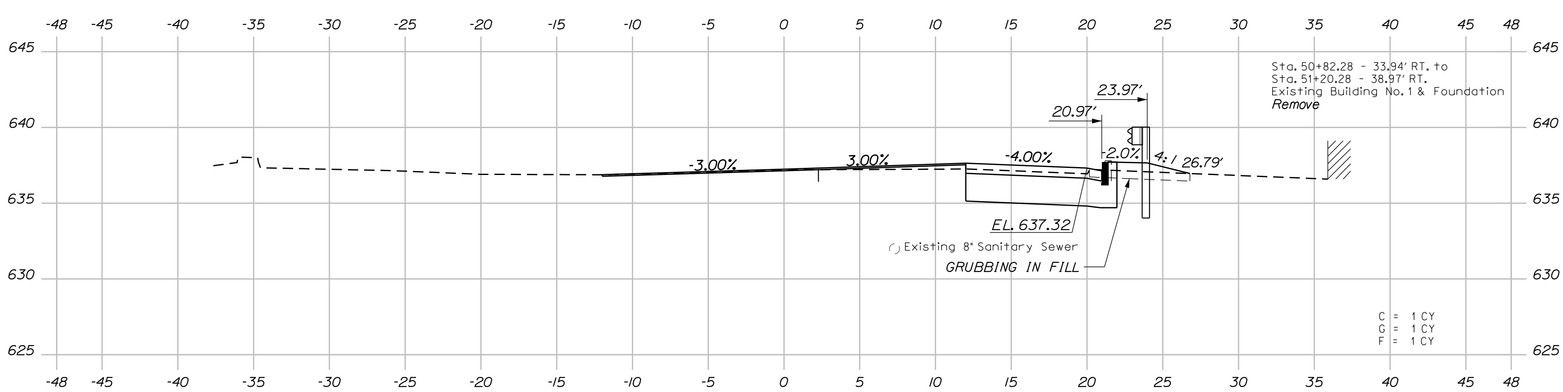

51+00.00

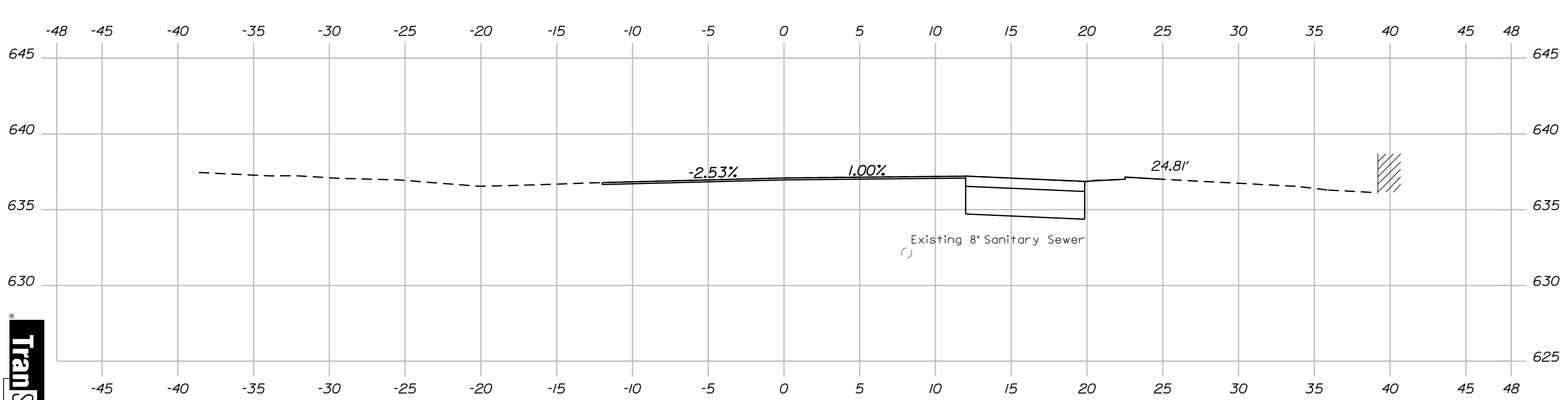

50+81.89

Begin Shoulder Reconstruction - Match Existing

Sta. 50+81.89 to Sta. 51+75.00

PROJ. MANAGER	S. BODGE	BY	DATE
DESIGN-DETAILED	T. SANDELL	T. SANDELL	
CHECKED-REVIEWED	D. WILK	E. LOWELL	05/2013
DESIGN2-DETAILED2			
DESIGN3-DETAILED3			
REVISIONS 1			
REVISIONS 2			
REVISIONS 3			
REVISIONS 4			
FIELD CHANGES			

SIGNATURE
9065
P.E. NUMBER
6/17/2013
DATE

STATE OF MAINE EVAN C. LOWELL NO. 9065 LICENSED PROFESSIONAL ENGINEER
Evan C. Lowell 6-17-13

SHEET NUMBER 40 OF 95

MARTIN MEMORIAL BRIDGE
ANDROSCOGGIN RIVER
RUMFORD OXFORD COUNTY

ROUTE 2
CROSS SECTIONS

STATE OF MAINE
DEPARTMENT OF TRANSPORTATION

BH-1510(500)X

WIN 15105.00

BRIDGE NO. 3248

BRIDGE PLANS

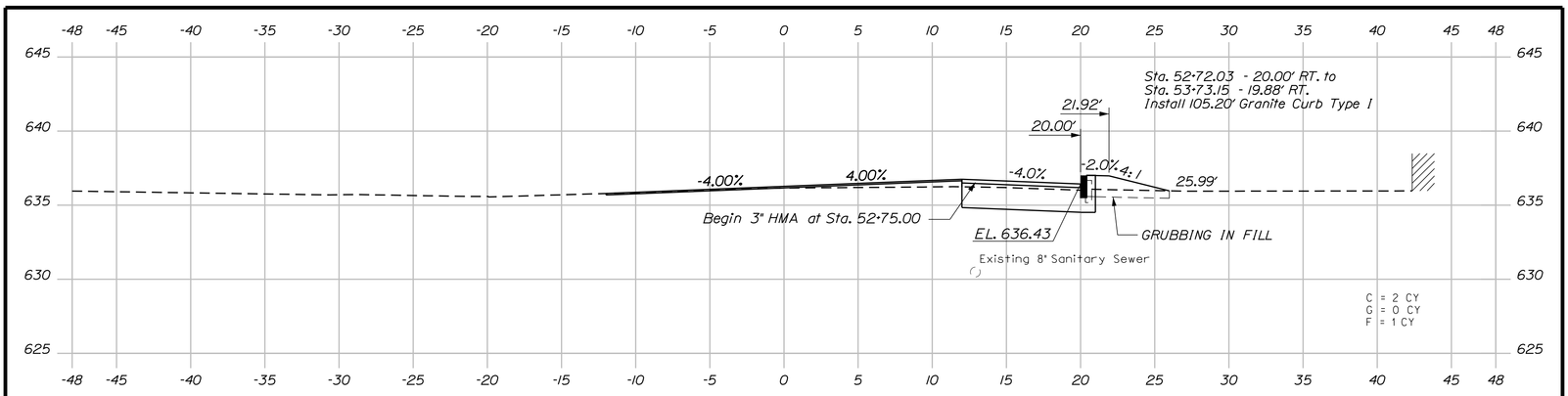

52+78.79

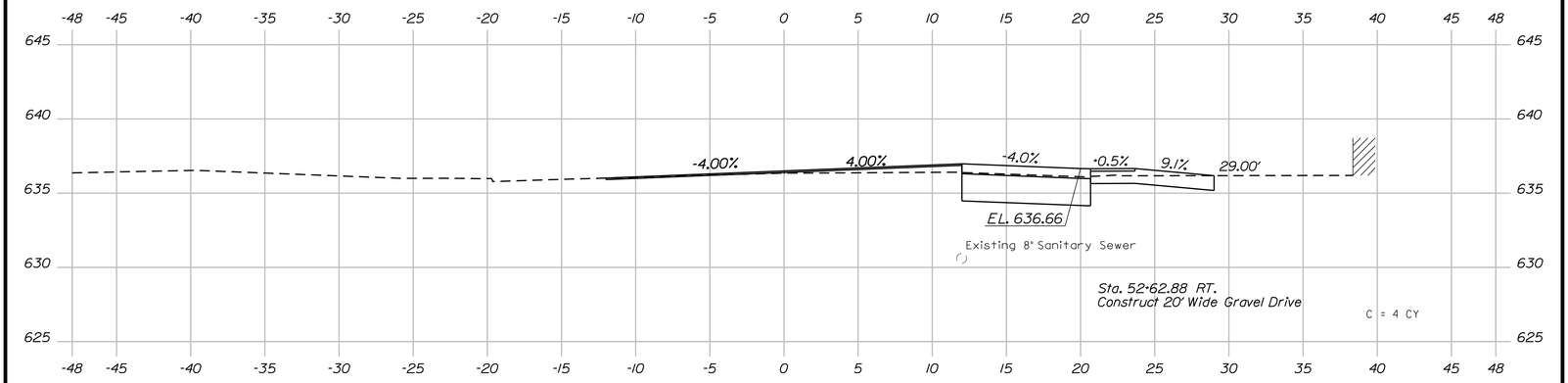

52+62.83

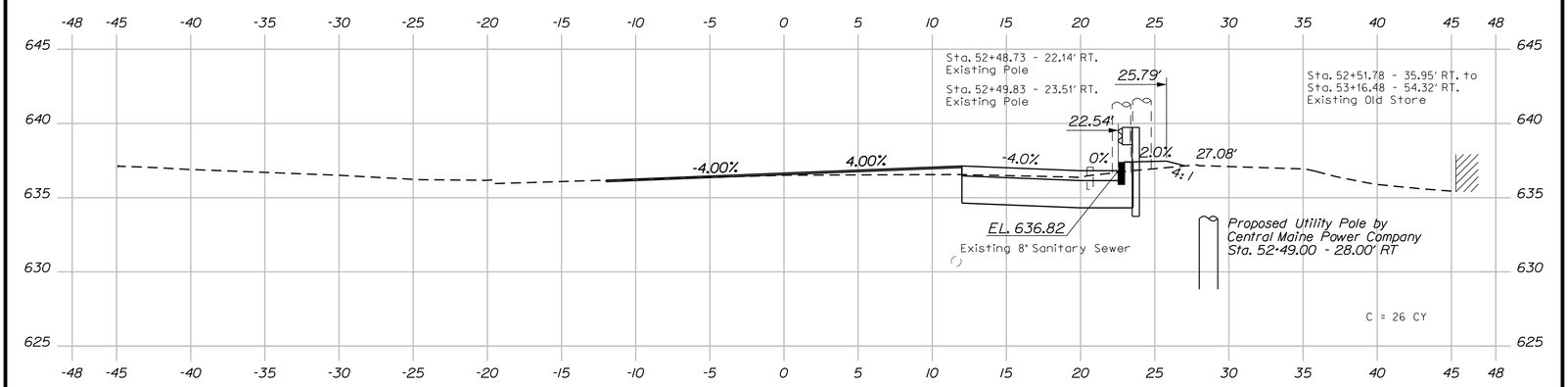

52+50.00

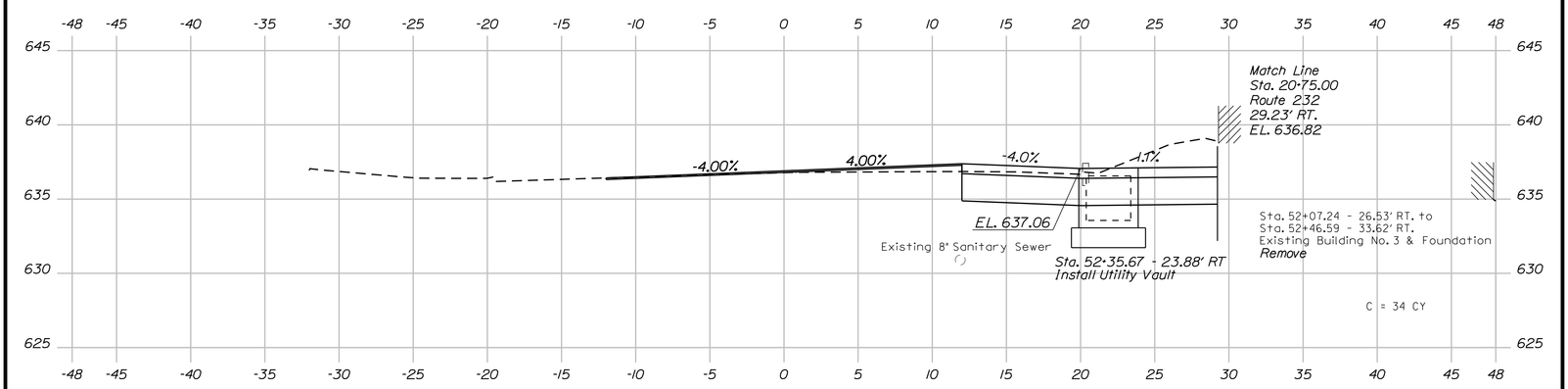

52+25.00

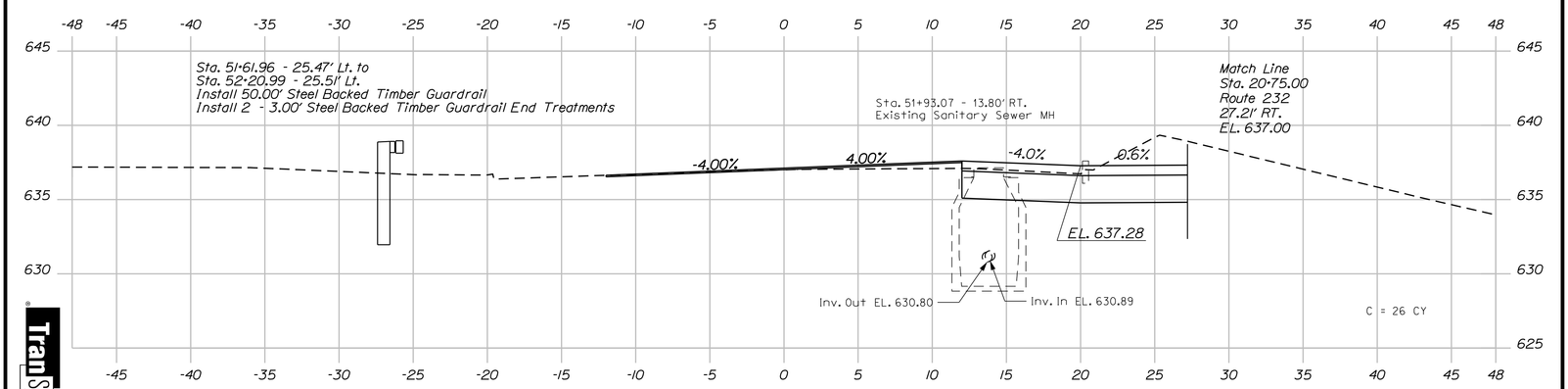

52+00.00

Sta. 52+00.00 to Sta. 52+78.79

Trans Systems

SHEET NUMBER 41 OF 95

MARTIN MEMORIAL BRIDGE
ANDROSCOGGIN RIVER
RUMFORD OXFORD COUNTY

ROUTE 2
CROSS SECTIONS

PROJ. MANAGER	S. BODGE	BY	DATE
DESIGN-DETAILED	T. SANDELL	T. SANDELL	
CHECKED-REVIEWED	D. WILK	E. LOWELL	05/2013
DESIGN2-DETAILED2			
DESIGN3-DETAILED3			
REVISIONS 1			
REVISIONS 2			
REVISIONS 3			
REVISIONS 4			
FIELD CHANGES			

SIGNATURE
9065
P.E. NUMBER
6/17/2013
DATE

STATE OF MAINE
EVAN C. LOWELL
NO. 9065
LICENSED
PROFESSIONAL ENGINEER
Evan C. Lowell
6-17-13

STATE OF MAINE
DEPARTMENT OF TRANSPORTATION

BH-1510(500)X

WIN
BRIDGE NO. 3248 15105.00 BRIDGE PLANS

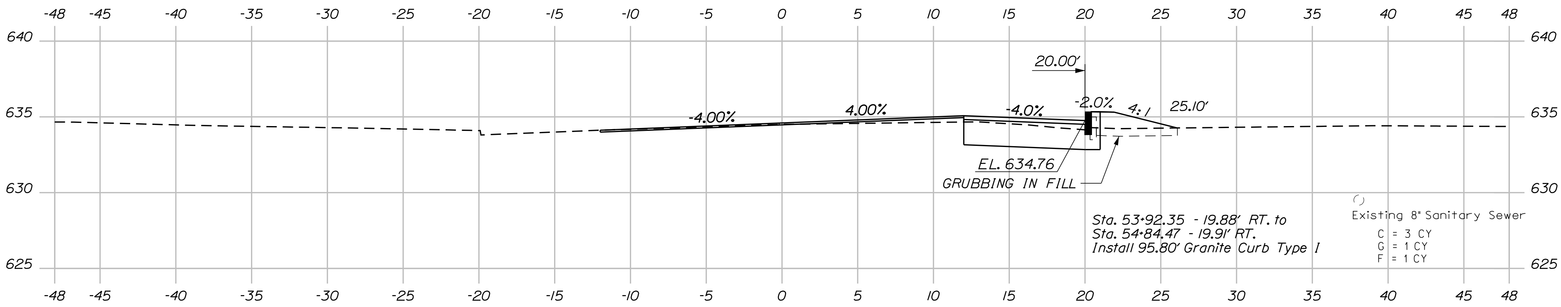

54+00.00

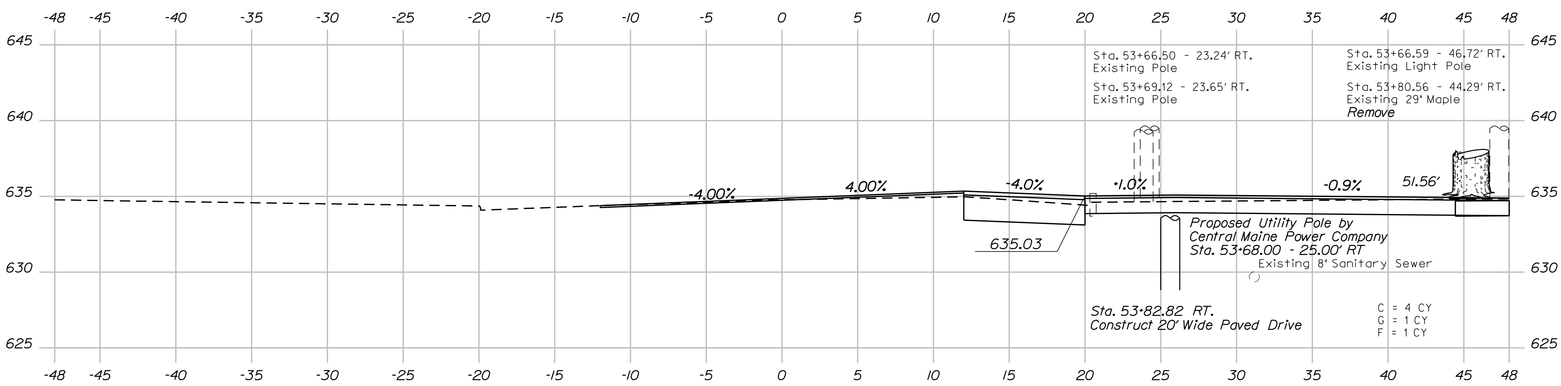

53+78.73

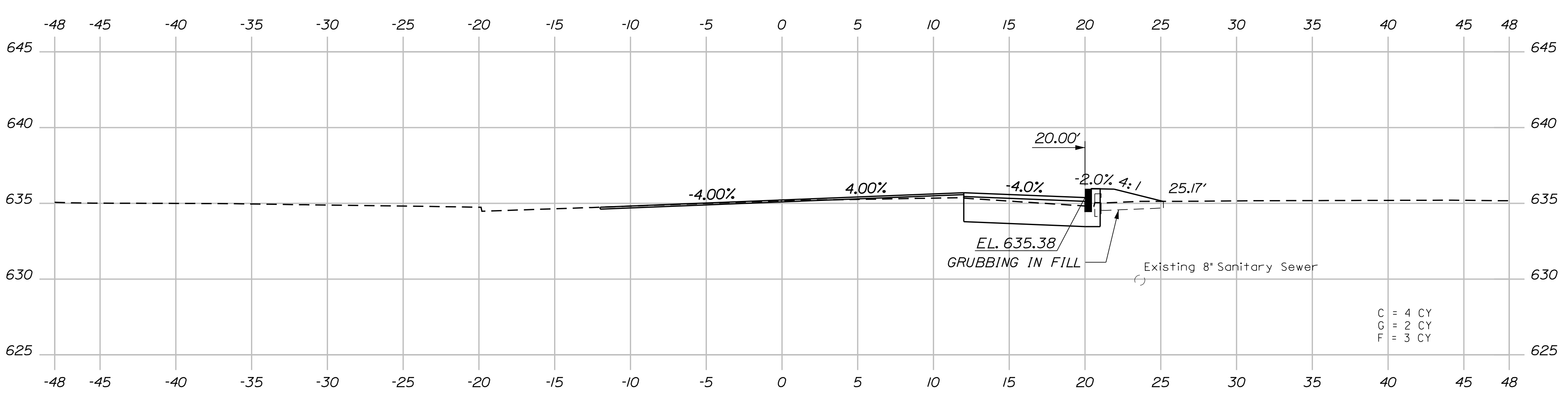

53+50.00

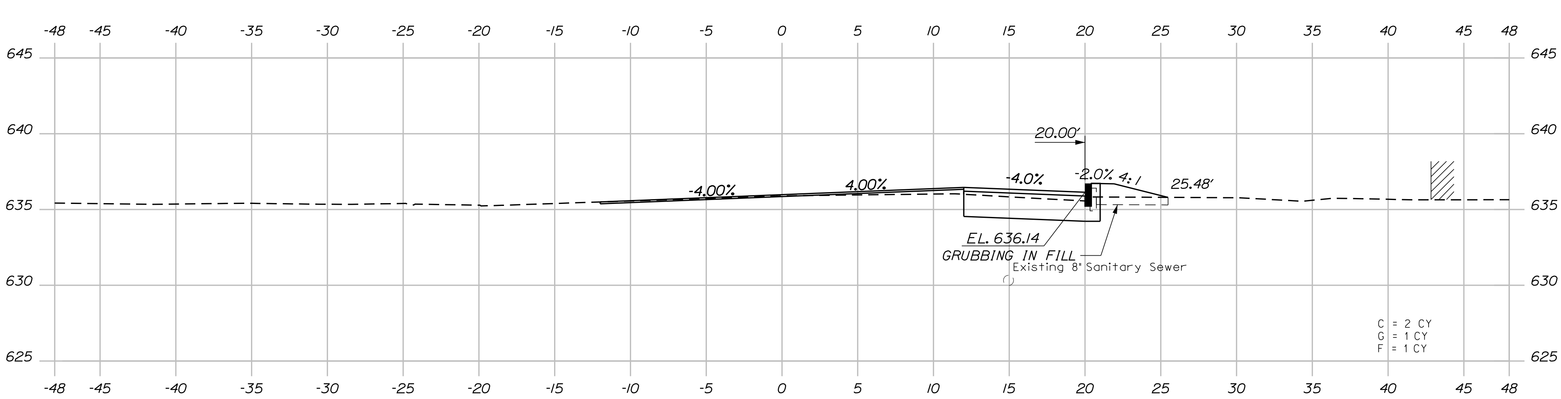

53+00.00

Sta. 53+00.00 to Sta. 54+00.00

TranSystems

SHEET NUMBER 42 OF 95

MARTIN MEMORIAL BRIDGE
ANDROSCOGGIN RIVER
RUMFORD OXFORD COUNTY

ROUTE 2
CROSS SECTIONS

PROJ. MANAGER	S. BODGE	BY	DATE
DESIGN-DETAILED	T. SANDELL	T. SANDELL	
CHECKED-REVIEWED	D. WILK	E. LOWELL	05/2013
DESIGN2-DETAILED2			
DESIGN3-DETAILED3			
REVISIONS 1			
REVISIONS 2			
REVISIONS 3			
REVISIONS 4			
FIELD CHANGES			

SIGNATURE
9065
P.E. NUMBER
6/17/2013
DATE

STATE OF MAINE
EVAN C. LOWELL
NO. 9065
LICENSED
PROFESSIONAL ENGINEER
Evan C. Lowell
6-17-13

STATE OF MAINE
DEPARTMENT OF TRANSPORTATION

BH-1510(500)X

BRIDGE NO. 3248 WIN 15105.00 BRIDGE PLANS

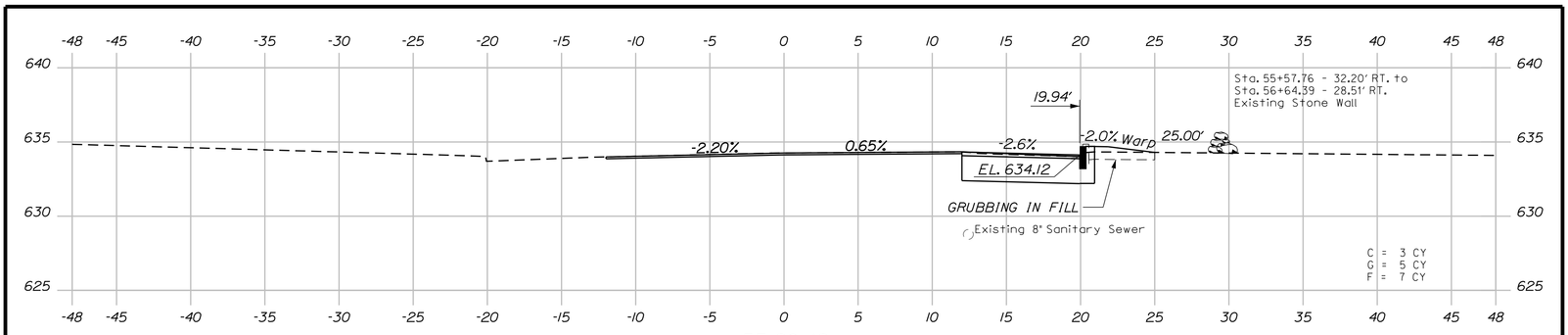

55+80.48

End Shoulder Reconstruction - Match Existing

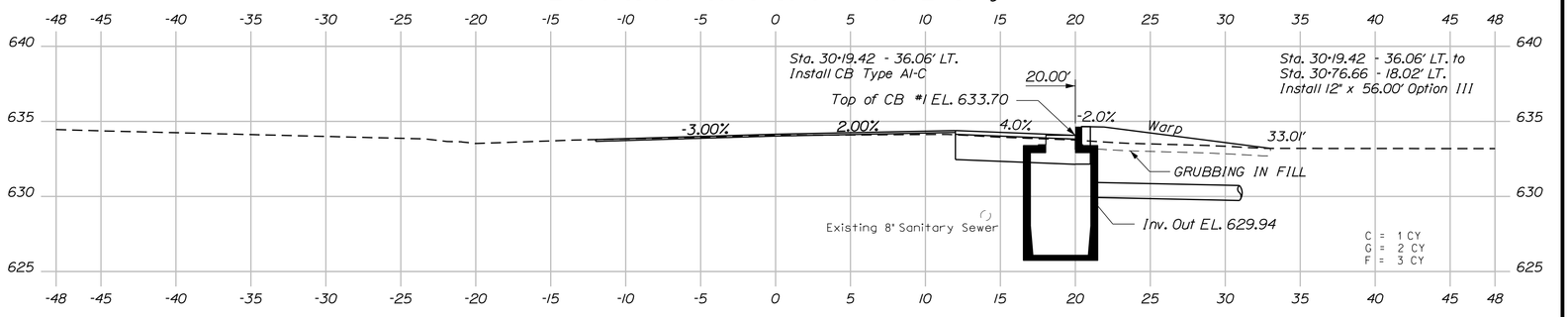

55+50.00

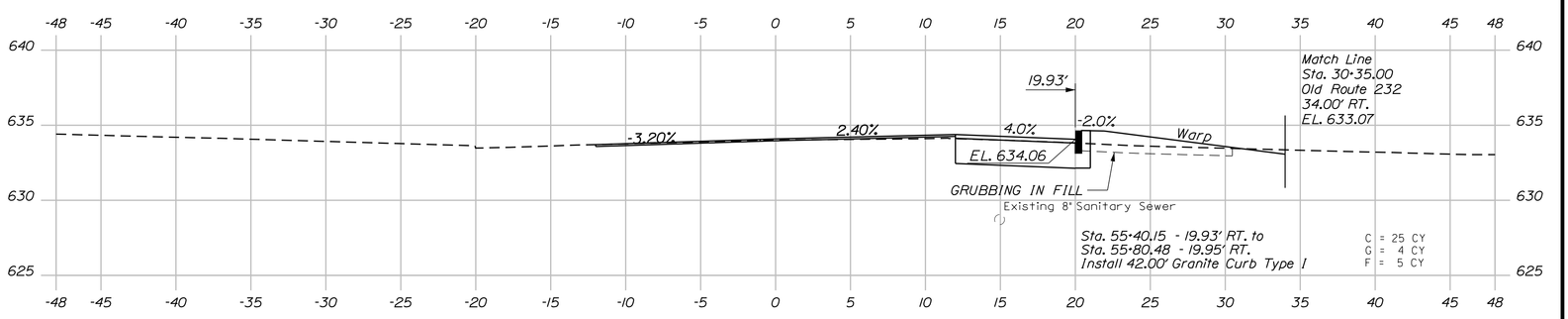

55+40.15

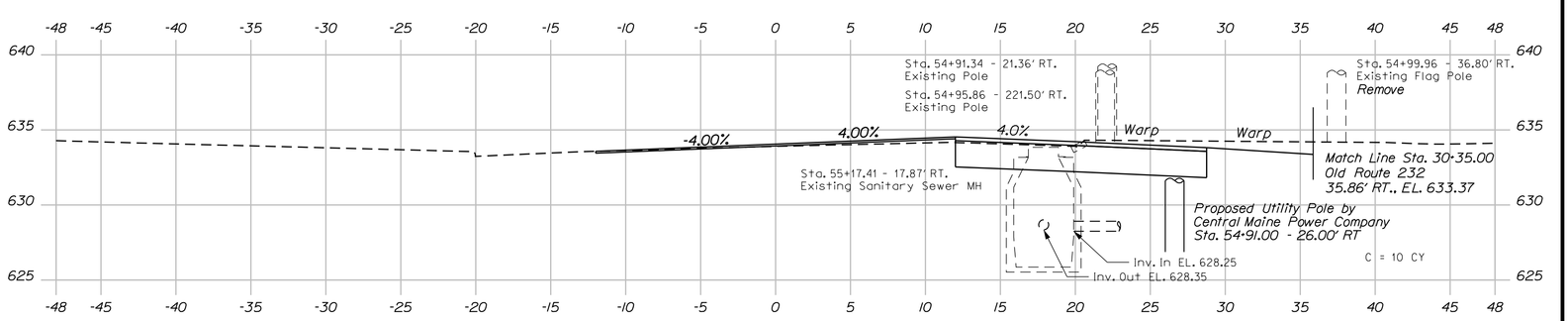

55+00.00

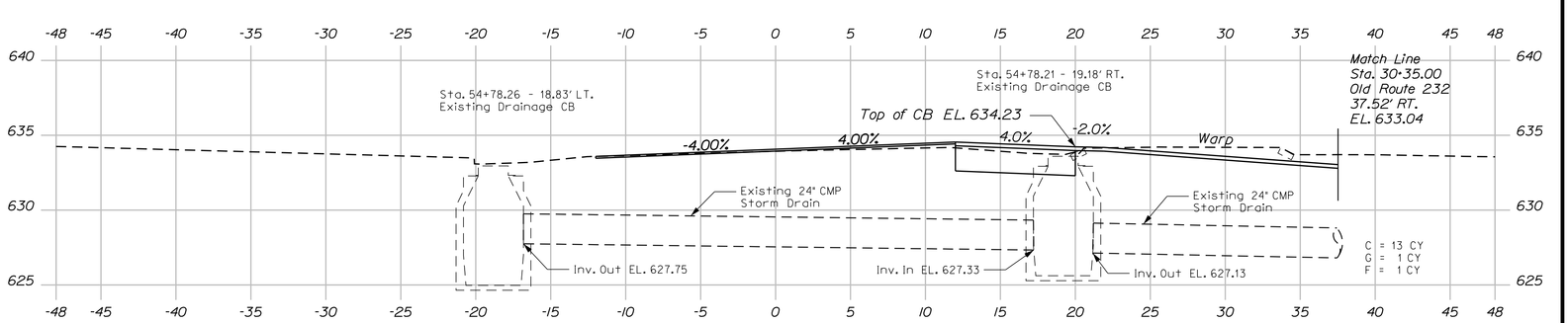

54+84.47

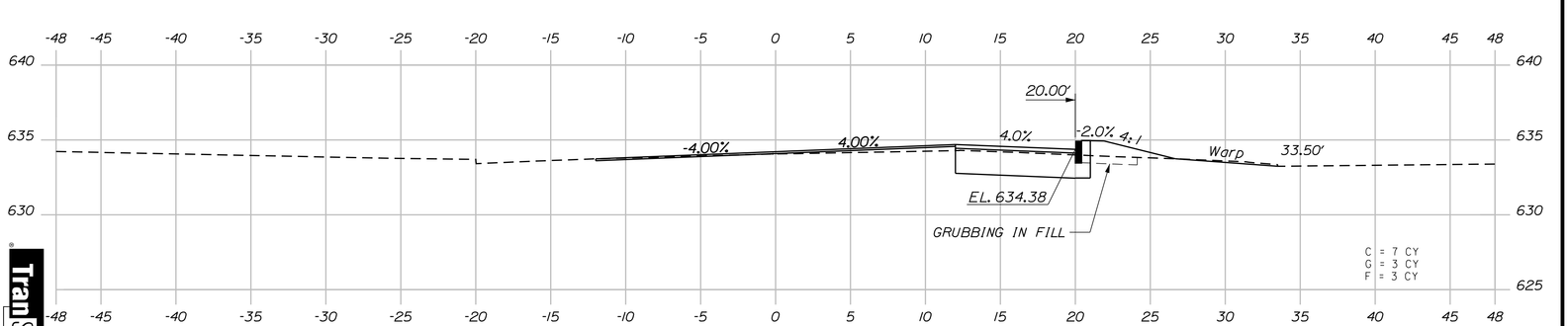

54+50.00

Sta. 54+50.00 to Sta. 55+80.48

Trans Systems

SHEET NUMBER 43 OF 95

MARTIN MEMORIAL BRIDGE
ANDROSCOGGIN RIVER
RUMFORD OXFORD COUNTY

ROUTE 2
CROSS SECTIONS

PROJ. MANAGER	S. BODGE	BY	DATE
DESIGN-DETAILED	T. SANDELL	T. SANDELL	
CHECKED-REVIEWED	D. WILK	E. LOWELL	05/2013
DESIGN2-DETAILED2			
DESIGN3-DETAILED3			
REVISIONS 1			
REVISIONS 2			
REVISIONS 3			
REVISIONS 4			
FIELD CHANGES			

SIGNATURE
9065
P.E. NUMBER
6/17/2013
DATE

STATE OF MAINE
EVAN C. LOWELL
NO. 9065
LICENSED
PROFESSIONAL ENGINEER
Evan C. Lowell
6-17-13

STATE OF MAINE
DEPARTMENT OF TRANSPORTATION

BH-1510(500)X

BRIDGE NO. 3248 WIN 15105.00 BRIDGE PLANS

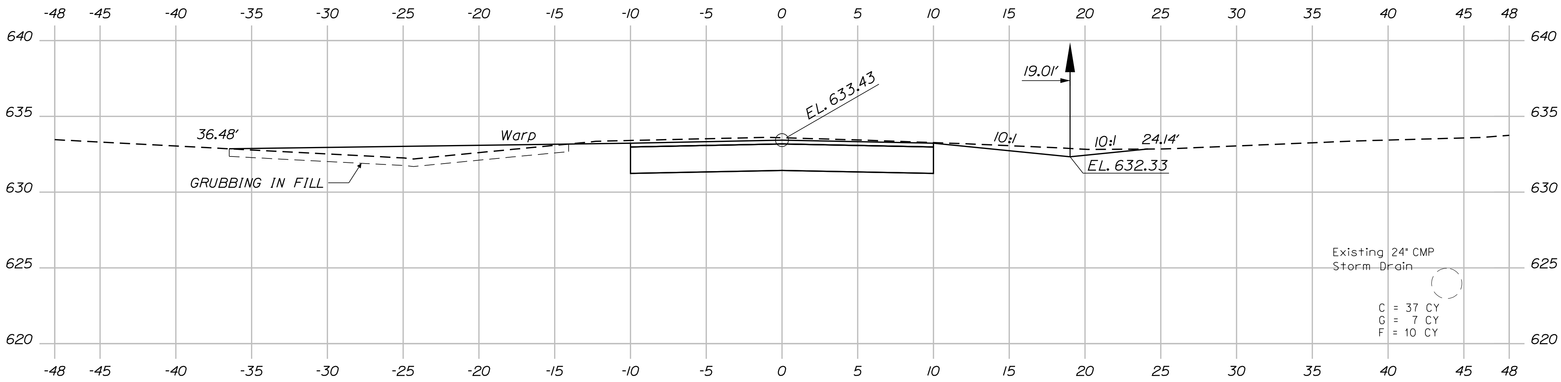

31+50.00

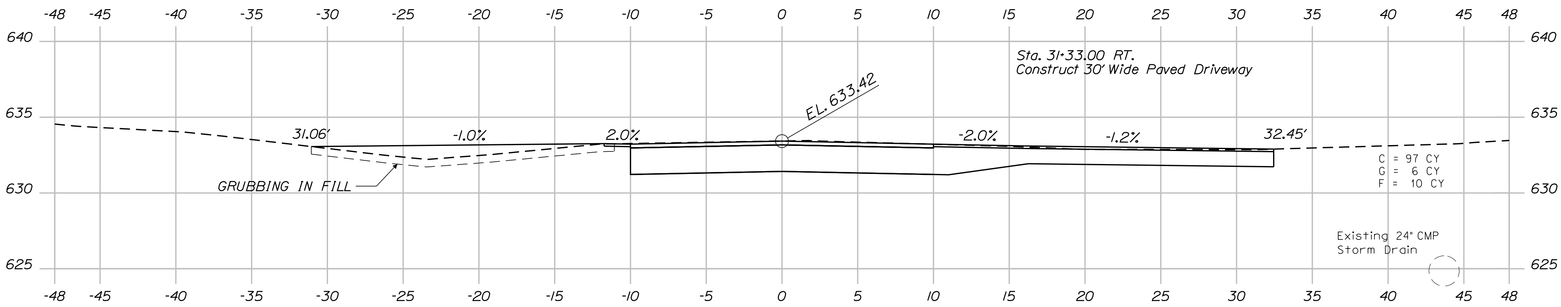

31+33.00

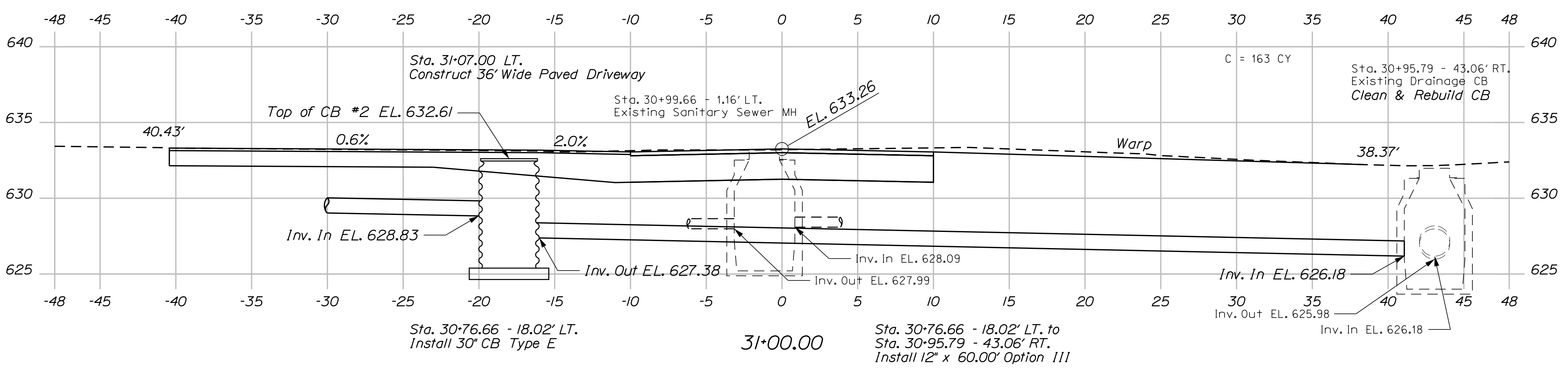

31+00.00

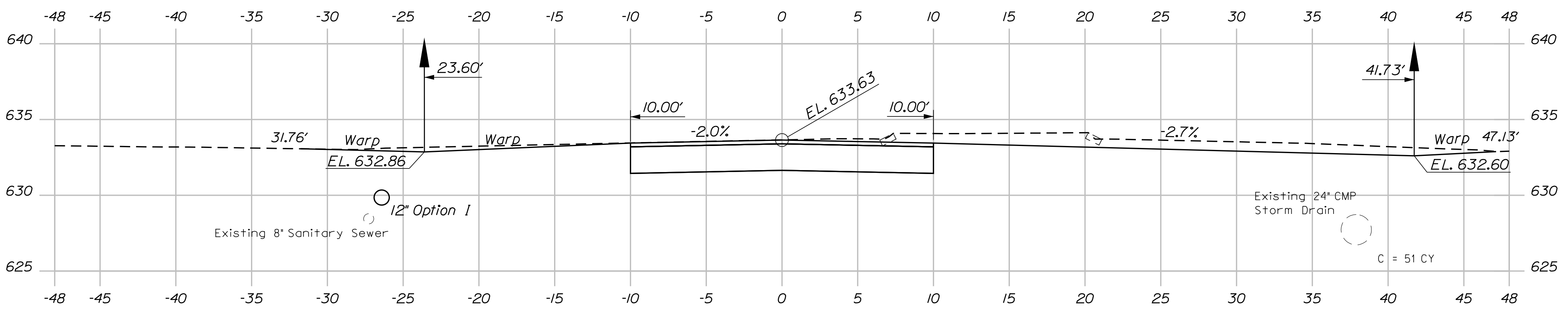

30+50.00

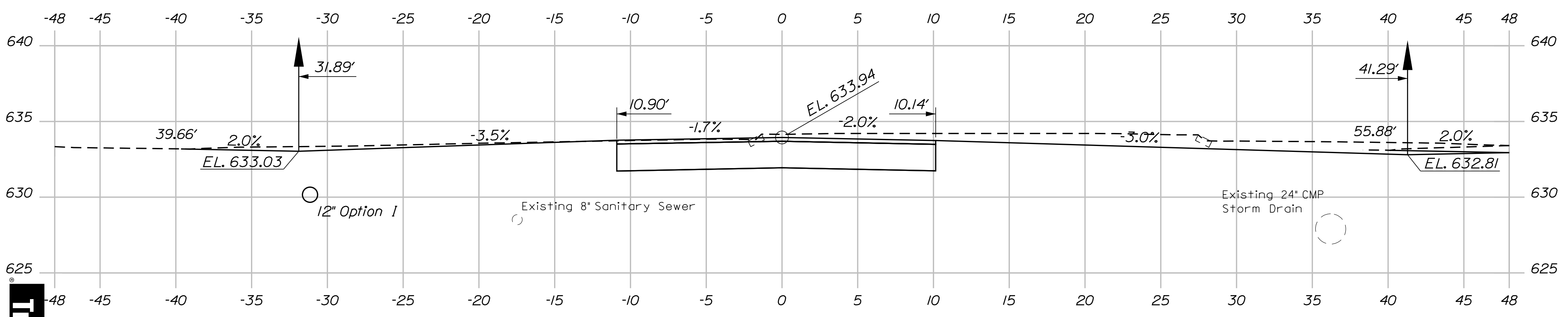

30+35.00

Sta. 30+35.00 to Sta. 31+50.00

TranSystems

PROJ. MANAGER	S. BODGE	BY	DATE
DESIGN-DETAILED	T. SANDELL	T. SANDELL	
CHECKED-REVIEWED	D. WILK	E. LOWELL	05/2013
DESIGN2-DETAILED2			
DESIGN3-DETAILED3			
REVISIONS 1			
REVISIONS 2			
REVISIONS 3			
REVISIONS 4			
FIELD CHANGES			

SIGNATURE
9065
P.E. NUMBER
6/17/2013
DATE

STATE OF MAINE
EVAN C. LOWELL
NO. 9065
LICENSED
PROFESSIONAL ENGINEER
6-17-13

MARTIN MEMORIAL BRIDGE
ANDROSCOGGIN RIVER
RUMFORD OXFORD COUNTY

OLD ROUTE 232
CROSS SECTIONS

SHEET NUMBER 44 OF 95

STATE OF MAINE
DEPARTMENT OF TRANSPORTATION

BH-1510(500)X

BRIDGE NO. 3248 WIN 15105.00 BRIDGE PLANS

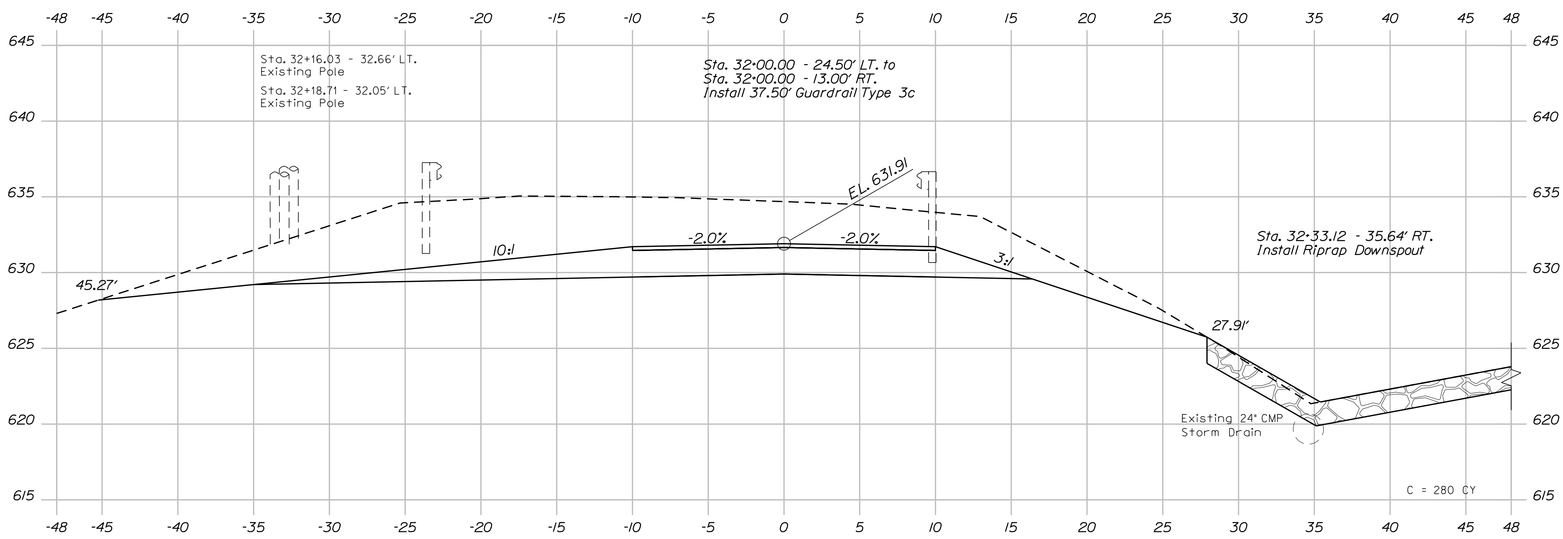

32+30.00

Sta. 32+41.96 - End Project

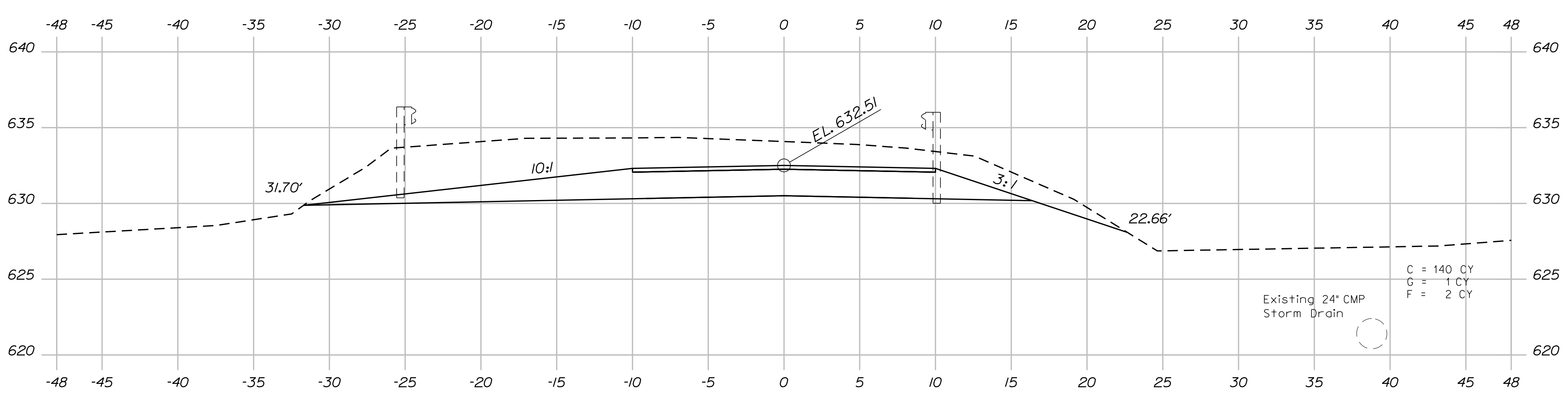

32+00.00

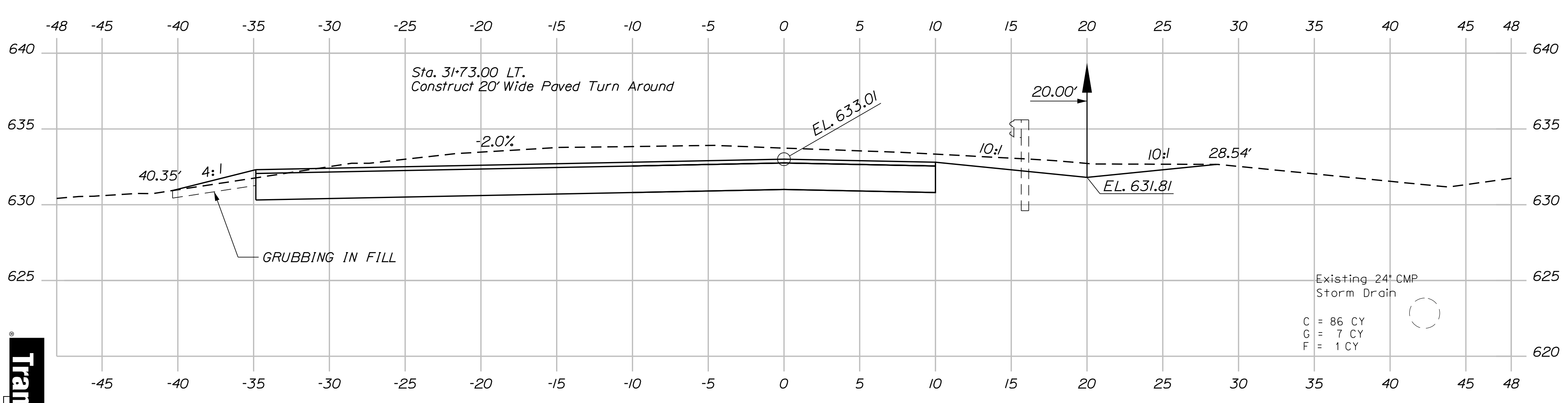

31+75.00

Sta. 31+75.00 to Sta. 32+30.00

SHEET NUMBER 45 OF 95

MARTIN MEMORIAL BRIDGE
ANDROSCOGGIN RIVER
RUMFORD OXFORD COUNTY

OLD ROUTE 232
CROSS SECTIONS

PROJ. MANAGER	S. BODGE	BY	DATE
DESIGN-DETAILED	T. SANDELL	T. SANDELL	
CHECKED-REVIEWED	D. WILK	E. LOWELL	05/2013
DESIGN2-DETAILED2			
DESIGN3-DETAILED3			
REVISIONS 1			
REVISIONS 2			
REVISIONS 3			
REVISIONS 4			
FIELD CHANGES			

SIGNATURE
9065
P.E. NUMBER
6/17/2013
DATE

STATE OF MAINE
EVAIN C. LOWELL
NO. 9065
LICENSED
PROFESSIONAL ENGINEER
Evain C. Lowell
6-17-13

STATE OF MAINE
DEPARTMENT OF TRANSPORTATION

BH-1510(500)X

WIN
BRIDGE NO. 3248 15105.00 BRIDGE PLANS

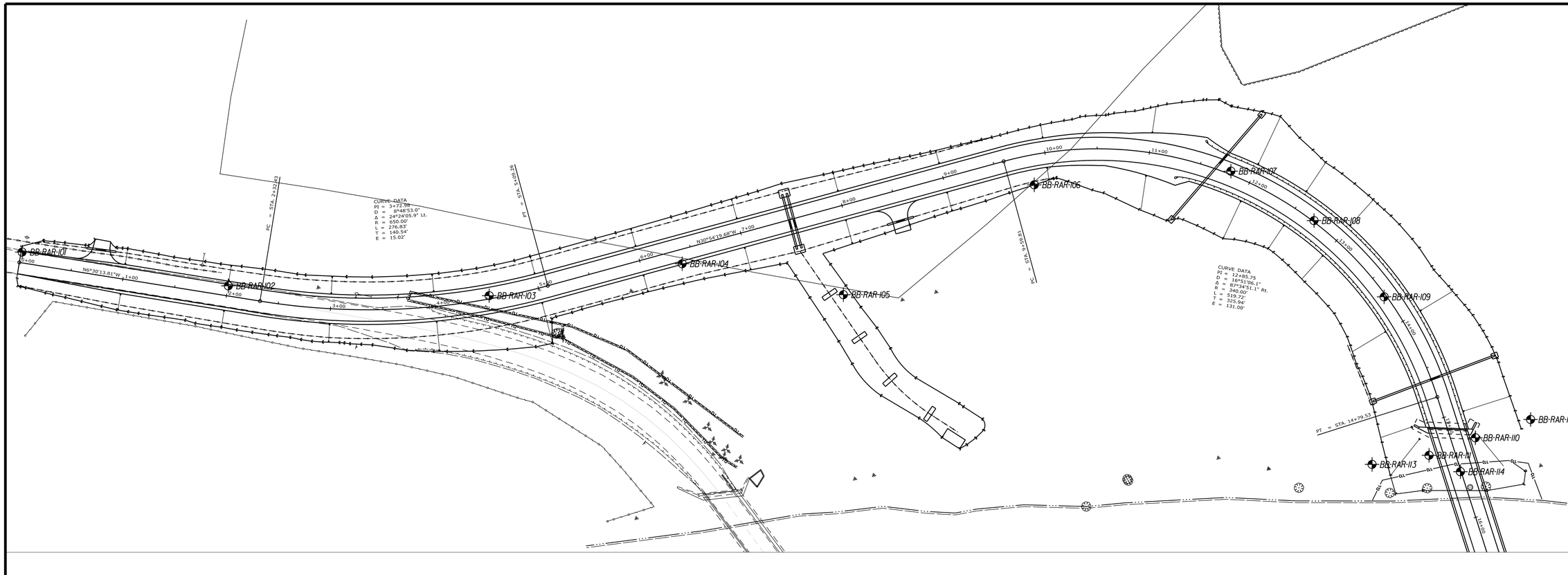

NOTES:

1. REFER TO SHEET NOS. 49 TO 61 FOR TEST BORING LOGS.

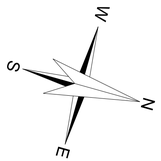

0 50 100 150 200

SCALE IN FEET

LEGEND

TEST BORING

HALEY & ALDRICH

STATE OF MAINE
DEPARTMENT OF TRANSPORTATION

BH-1510(500)X

WIN 15105.00

BRIDGE NO. 3248

BRIDGE PLANS

STATE OF MAINE — WAYNE A. CHADBOURNE — No. 10620 — PROFESSIONAL ENGINEER — LICENSED

SIGNATURE

10620
P.E. NUMBER

5/29/2013
DATE

PROJ. MANAGER	S. BODGE		
DESIGN-DETAILED	B. STEINERT	BY	DATE
CHECKED-REVIEWED	W. CHADBOURNE	B. STEINERT	09/2012
DESIGN2-DETAILED2		W. CHADBOURNE	09/2012
DESIGN3-DETAILED3			
REVISIONS 1			
REVISIONS 2			
REVISIONS 3			
REVISIONS 4			
FIELD CHANGES			

MARTIN MEMORIAL BRIDGE
ANDROSCOGGIN RIVER
RUMFORD OXFORD COUNTY

BORING LOCATION PLAN

SHEET NUMBER

46

OF 95

Filename: ...\046_BoringLocationPlan.dgn Division: BRIDGE Username: T SANDELL Date:5/29/2013

NOTES:

1. REFER TO SHEET NOS. 49 TO 61 FOR TEST BORING LOGS.

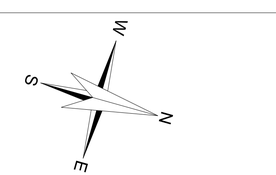

LEGEND

TEST BORING

HALEY & ALDRICH

STATE OF MAINE
DEPARTMENT OF TRANSPORTATION

BH-1510(500)X

WIN 15105.00

BRIDGE NO. 3248

BRIDGE PLANS

STATE OF MAINE
WAYNE A. CHADBOURNE
No. 10620
LICENSED PROFESSIONAL ENGINEER

PROJ. MANAGER	S. BODGE	BY	DATE
DESIGN-DETAILED	B. STEINERT	B. STEINERT	09/2012
CHECKED-REVIEWED	W. CHADBOURNE	W. CHADBOURNE	09/2012
DESIGN2-DETAILED2			
DESIGN3-DETAILED3			
REVISIONS 1			
REVISIONS 2			
REVISIONS 3			
REVISIONS 4			
FIELD CHANGES			

SIGNATURE

10620
P.E. NUMBER

5/29/2013
DATE

MARTIN MEMORIAL BRIDGE
ANDROSCOGGIN RIVER
RUMFORD OXFORD COUNTY

BORING LOCATION PLAN

SHEET NUMBER

47

OF 95

Filename: ...\047_BoringLocationPlan.dgn Division: BRIDGE Username: T SANDELL Date:5/29/2013

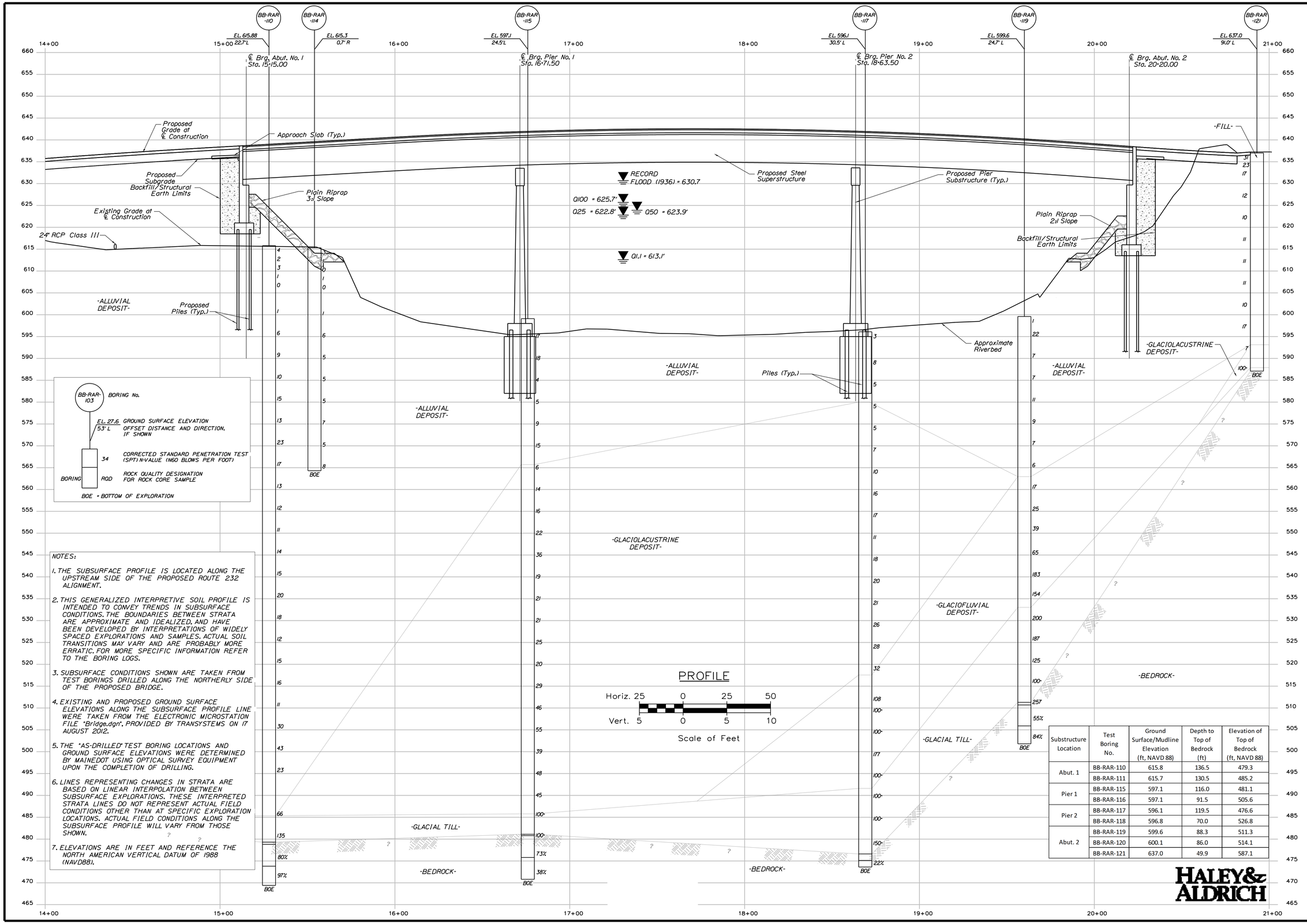

NOTES:

1. THE SUBSURFACE PROFILE IS LOCATED ALONG THE UPSTREAM SIDE OF THE PROPOSED ROUTE 232 ALIGNMENT.
2. THIS GENERALIZED INTERPRETIVE SOIL PROFILE IS INTENDED TO CONVEY TRENDS IN SUBSURFACE CONDITIONS. THE BOUNDARIES BETWEEN STRATA ARE APPROXIMATE AND IDEALIZED, AND HAVE BEEN DEVELOPED BY INTERPRETATIONS OF WIDELY SPACED EXPLORATIONS AND SAMPLES. ACTUAL SOIL TRANSITIONS MAY VARY AND ARE PROBABLY MORE ERRATIC. FOR MORE SPECIFIC INFORMATION REFER TO THE BORING LOGS.
3. SUBSURFACE CONDITIONS SHOWN ARE TAKEN FROM TEST BORINGS DRILLED ALONG THE NORTHERLY SIDE OF THE PROPOSED BRIDGE.
4. EXISTING AND PROPOSED GROUND SURFACE ELEVATIONS ALONG THE SUBSURFACE PROFILE LINE WERE TAKEN FROM THE ELECTRONIC MICROSTATION FILE "Bridge.dgn", PROVIDED BY TRANSYSTEMS ON 17 AUGUST 2012.
5. THE "AS-DRILLED" TEST BORING LOCATIONS AND GROUND SURFACE ELEVATIONS WERE DETERMINED BY MAINEDOT USING OPTICAL SURVEY EQUIPMENT UPON THE COMPLETION OF DRILLING.
6. LINES REPRESENTING CHANGES IN STRATA ARE BASED ON LINEAR INTERPOLATION BETWEEN SUBSURFACE EXPLORATIONS. THESE INTERPRETED STRATA LINES DO NOT REPRESENT ACTUAL FIELD CONDITIONS OTHER THAN AT SPECIFIC EXPLORATION LOCATIONS. ACTUAL FIELD CONDITIONS ALONG THE SUBSURFACE PROFILE WILL VARY FROM THOSE SHOWN.
7. ELEVATIONS ARE IN FEET AND REFERENCE THE NORTH AMERICAN VERTICAL DATUM OF 1988 (NAVD88).

Substructure Location	Test Boring No.	Ground Surface/Mudline Elevation (ft, NAVD 88)	Depth to Top of Bedrock (ft)	Elevation of Top of Bedrock (ft, NAVD 88)
Abut. 1	BB-RAR-110	615.8	136.5	479.3
	BB-RAR-111	615.7	130.5	485.2
Pier 1	BB-RAR-115	597.1	116.0	481.1
	BB-RAR-116	597.1	91.5	505.6
Pier 2	BB-RAR-117	596.1	119.5	476.6
	BB-RAR-118	596.8	70.0	526.8
Abut. 2	BB-RAR-119	599.6	88.3	511.3
	BB-RAR-120	600.1	86.0	514.1
	BB-RAR-121	637.0	49.9	587.1

HALEY & ALDRICH

STATE OF MAINE
DEPARTMENT OF TRANSPORTATION

BH-1510(500)X

WIN 15105.00

BRIDGE NO. 3248

BRIDGE PLANS

STATE OF MAINE WAYNE A. CHADBOURNE No. 10620 PROFESSIONAL ENGINEER

SIGNATURE		
10620	P.E. NUMBER	
5/29/2013	DATE	

PROJ. MANAGER	S. BODGE		
DESIGN-DETAILED	B. STEINERT	B. STEINERT	09/2012
CHECKED-REVIEWED	W. CHADBOURNE	W. CHADBOURNE	09/2012
DESIGN2-DETAILED2			
DESIGN3-DETAILED3			
REVISIONS 1			
REVISIONS 2			
REVISIONS 3			
REVISIONS 4			
FIELD CHANGES			

MARTIN MEMORIAL BRIDGE
ANDROSCOGGIN RIVER
RUMFORD OXFORD COUNTY

INTERPRETIVE SUBSURFACE PROFILE

SHEET NUMBER
48
OF 95

Filename: ...\Road\048_SubsurfaceProfile.dgn Division: BRIDGE Username: T SANDELL Date:5/29/2013

Filename: ...\0030\Road\049_BoringLogs.dgn Division: BRIDGE Username: T SANDELL Date:5/29/2013

Maine Department of Transportation
Soil/Rock Exploration Log
US CUSTOMARY UNITS

Project: Martin Memorial Bridge Replacement
Location: Route 232 - Rumford, Maine
Boring No.: BB-RAR-101
PIN: 15105.00

Driller:	Maine Test Borings	Elevation (ft.)	624.8	Auger ID/OD:	HSA-2.25 in. ID
Operator:	B. Enos	Datum:	NAVD 88	Sampler:	Split Spoon-1.375 in. ID
Logged By:	B. Babcock	Rig Type:	CME 45 Skid on Trailer	Hammer Wt./Fall:	S-140/30
Date Start/Finish:	06-07-2012/06-07-2012	Drilling Method:	HSA	Core Barrel:	--
Boring Location:	Sta. 00+00, 10.2' Lt.	Casing ID/OD:	--	Water Level *:	9.6
Hammer Efficiency Factor:	0.6	Hammer Type:	Automatic☐ Hydraulic☐ Rope & Cathead☒		

Definitions:
D = Split Spoon Sample
MD = Unsuccessful Split Spoon Sample attempt
U = Thin Wall Tube Sample
MU = Unsuccessful Thin Wall Tube Sample attempt
V = Insitu Vane Shear Test
MV = Unsuccessful Insitu Vane Shear Test attempt
R = Rock Core Sample
SSA = Solid Stem Auger
HSA = Hollow Stem Auger
RC = Roller Cone
WOH = weight of 140lb. hammer
WOR = weight of rods
WO1P = Weight of one person
S=u = Insitu Field Vane Shear Strength (psf)
T=v = Pocket Torvane Shear Strength (psf)
q=p = Unconfined Compressive Strength (ksf)
N-uncorrected = Raw field SPT N-value
Hammer Efficiency Factor = Annual Calibration Value
N=6-0 = SPT N-uncorrected corrected for hammer efficiency
N=6-0 = (Hammer Efficiency Factor/60%)*N-uncorrected
S=u (~1~a~b~) = Lab Vane Shear Strength (psf)
WC = water content, percent
LL = Liquid Limit
PL = Plastic Limit
PI = Plasticity Index
G = Grain Size Analysis
C = Consolidation Test

Sample Information

Depth (ft.)	Sample No.	Pen./Rec. (in.)	Sample Depth (ft.)	Blows (6 in.) Shear Strength (psf) or RQD (%)	N-uncorrected	N=6-0	Casing Blows	Elevation (ft.)	Visual Description and Remarks	Laboratory Testing Results/ AASHTO and Unified Class.
0	1D	18/6	0.5 - 2.0	11/13/7	20	20	HSA	624.1	-BITUMINOUS CONCRETE- 0.7	
								622.3	Brown to light brown, dry, medium dense, fine to coarse SAND, trace silt, little fine gravel -FILL-(SW-SM) 2.0	G#248300 A-1-b, SW-SM WC=4.5%
	2D	24/12	2.0 - 4.0	11/6/3/2	9	9			Dark brown to brown, dry to moist, loose, fine to coarse SAND, little silt, little fine gravel, grading to silty SAND in tip of spoon -ALLUVIAL DEPOSIT-(SM)	G#248301 A-1-b, SM WC=7.4%
	3D	24/18	4.0 - 6.0	1/3/2/6	5	5		618.8	Brown to light brown, moist, loose, fine to medium SAND, little silt, trace coarse sand and fine gravel, stratified -ALLUVIAL DEPOSIT-(SM) 6.0	G#248302 A-1-b, SM WC=15.3%
	4D	24/16	6.0 - 8.0	11/20/16/17	36	36			Light brown, moist, dense, fine to coarse SAND, little gravel, stratified -ALLUVIAL DEPOSIT-(SW)	
	5D	24/14	8.0 - 10.0	25/20/16/15	36	36		614.8	Light brown, moist, dense, fine to coarse SAND, little gravel, stratified -ALLUVIAL DEPOSIT-(SW) 10.0	
25									Bottom of Exploration at 10.0 feet below ground surface.	

Remarks:
1. As-drilled coordinates of test borings determined by MaineDOT and provided to Haley & Aldrich in NAD 83 Maine 2000 West Zone Coordinate System. As-drilled coordinates related to station and offset information by TranSystems.

Stratification lines represent approximate boundaries between soil types; transitions may be gradual.
** Water level readings have been made at times and under conditions stated. Groundwater fluctuations may occur due to conditions other than those present at the time measurements were made.

Page 1 of 1
Boring No.: BB-RAR-101

Maine Department of Transportation
Soil/Rock Exploration Log
US CUSTOMARY UNITS

Project: Martin Memorial Bridge Replacement
Location: Route 232 - Rumford, Maine
Boring No.: BB-RAR-102
PIN: 15105.00

Driller:	Maine Test Borings	Elevation (ft.)	622.8	Auger ID/OD:	HSA-2.25 in. ID
Operator:	B. Enos	Datum:	NAVD 88	Sampler:	Split Spoon-1.375 in. ID
Logged By:	B. Babcock	Rig Type:	CME 45 Skid on Trailer	Hammer Wt./Fall:	S-140/30
Date Start/Finish:	06-07-2012/06-07-2012	Drilling Method:	HSA	Core Barrel:	--
Boring Location:	Sta. 02+00, 9.6' Lt.	Casing ID/OD:	--	Water Level *:	11.5
Hammer Efficiency Factor:	0.6	Hammer Type:	Automatic☐ Hydraulic☐ Rope & Cathead☒		

Definitions:
D = Split Spoon Sample
MD = Unsuccessful Split Spoon Sample attempt
U = Thin Wall Tube Sample
MU = Unsuccessful Thin Wall Tube Sample attempt
V = Insitu Vane Shear Test
MV = Unsuccessful Insitu Vane Shear Test attempt
R = Rock Core Sample
SSA = Solid Stem Auger
HSA = Hollow Stem Auger
RC = Roller Cone
WOH = weight of 140lb. hammer
WOR = weight of rods
WO1P = Weight of one person
S=u = Insitu Field Vane Shear Strength (psf)
T=v = Pocket Torvane Shear Strength (psf)
q=p = Unconfined Compressive Strength (ksf)
N-uncorrected = Raw field SPT N-value
Hammer Efficiency Factor = Annual Calibration Value
N=6-0 = SPT N-uncorrected corrected for hammer efficiency
N=6-0 = (Hammer Efficiency Factor/60%)*N-uncorrected
S=u (~1~a~b~) = Lab Vane Shear Strength (psf)
WC = water content, percent
LL = Liquid Limit
PL = Plastic Limit
PI = Plasticity Index
G = Grain Size Analysis
C = Consolidation Test

Sample Information

Depth (ft.)	Sample No.	Pen./Rec. (in.)	Sample Depth (ft.)	Blows (6 in.) Shear Strength (psf) or RQD (%)	N-uncorrected	N=6-0	Casing Blows	Elevation (ft.)	Visual Description and Remarks	Laboratory Testing Results/ AASHTO and Unified Class.
0							HSA	622.3	-BITUMINOUS CONCRETE- 0.7	
	1D	24/15	1.0 - 3.0	13/4/3/4	7	7		620.8	Black to light brown, dry, loose, fine to medium SAND, trace coarse sand, little silt and fine gravel -FILL-(SM) 2.0	G#248303 A-1-b, SM WC=9.5%
	2D	24/14	3.0 - 5.0	4/3/3/5	6	6		619.8	Brown to red-brown, moist, loose, silty fine to medium SAND, trace coarse sand, some fine gravel -ALLUVIAL DEPOSIT-(SM) 3.0	G#248374 A-7-5, SM LL=55, PL=40 PI=15
	3D	24/10	5.0 - 7.0	7/9/10/9	19	19			Light brown, moist, loose, fine to coarse SAND, little silt and fine gravel ALLUVIAL DEPOSIT-(SW-SM)	G#248304 A-1-b, SW-SM WC=10.8%
	4D	24/20	7.0 - 9.0	5/5/4/4	9	9			Light brown, moist, medium dense, fine to coarse SAND, trace gravel, stratified -ALLUVIAL DEPOSIT-(SW) Light brown, moist, loose, fine to coarse SAND, stratified -ALLUVIAL DEPOSIT-(SW)	
	5D	24/16	9.0 - 11.0	4/3/3/4	6	6			Light brown with occasional red-brown mottling, moist, loose, fine to coarse SAND, stratified -ALLUVIAL DEPOSIT-(SW)	
	6D	24/22	11.0 - 13.0	4/3/2/3	5	5			Light brown, wet, loose, fine to medium SAND, trace coarse sand, trace silt, stratified -ALLUVIAL DEPOSIT-(SW)	
								609.8	13.0	
25									Bottom of Exploration at 13.0 feet below ground surface.	

Remarks:
1. As-drilled coordinates of test borings determined by MaineDOT and provided to Haley & Aldrich in NAD 83 Maine 2000 West Zone Coordinate System. As-drilled coordinates related to station and offset information by TranSystems.

Stratification lines represent approximate boundaries between soil types; transitions may be gradual.
** Water level readings have been made at times and under conditions stated. Groundwater fluctuations may occur due to conditions other than those present at the time measurements were made.

Page 1 of 1
Boring No.: BB-RAR-102

Maine Department of Transportation
Soil/Rock Exploration Log
US CUSTOMARY UNITS

Project: Martin Memorial Bridge Replacement
Location: Route 232 - Rumford, Maine
Boring No.: BB-RAR-103
PIN: 15105.00

Driller:	Maine Test Borings	Elevation (ft.)	619.7	Auger ID/OD:	HSA-2.25 in. ID
Operator:	B. Enos	Datum:	NAVD 88	Sampler:	Split Spoon-1.375 in. ID
Logged By:	B. Babcock	Rig Type:	CME 45 Skid on Trailer	Hammer Wt./Fall:	S-140/30
Date Start/Finish:	06-07-2012/06-07-2012	Drilling Method:	HSA	Core Barrel:	--
Boring Location:	Sta. 04+53, 3.1' Lt.	Casing ID/OD:	--	Water Level *:	9.0
Hammer Efficiency Factor:	0.6	Hammer Type:	Automatic☐ Hydraulic☐ Rope & Cathead☒		

Definitions:
D = Split Spoon Sample
MD = Unsuccessful Split Spoon Sample attempt
U = Thin Wall Tube Sample
MU = Unsuccessful Thin Wall Tube Sample attempt
V = Insitu Vane Shear Test
MV = Unsuccessful Insitu Vane Shear Test attempt
R = Rock Core Sample
SSA = Solid Stem Auger
HSA = Hollow Stem Auger
RC = Roller Cone
WOH = weight of 140lb. hammer
WOR = weight of rods
WO1P = Weight of one person
S=u = Insitu Field Vane Shear Strength (psf)
T=v = Pocket Torvane Shear Strength (psf)
q=p = Unconfined Compressive Strength (ksf)
N-uncorrected = Raw field SPT N-value
Hammer Efficiency Factor = Annual Calibration Value
N=6-0 = SPT N-uncorrected corrected for hammer efficiency
N=6-0 = (Hammer Efficiency Factor/60%)*N-uncorrected
S=u (~1~a~b~) = Lab Vane Shear Strength (psf)
WC = water content, percent
LL = Liquid Limit
PL = Plastic Limit
PI = Plasticity Index
G = Grain Size Analysis
C = Consolidation Test

Sample Information

Depth (ft.)	Sample No.	Pen./Rec. (in.)	Sample Depth (ft.)	Blows (6 in.) Shear Strength (psf) or RQD (%)	N-uncorrected	N=6-0	Casing Blows	Elevation (ft.)	Visual Description and Remarks	Laboratory Testing Results/ AASHTO and Unified Class.
0	1D	24/14	0.0 - 2.0	1/1/2/3	3	3	HSA	617.7	Brown, moist, soft, elastic SILT, trace fine to medium sand, roots in top 6 in. of recovery -TOPSOIL-(MH) 2.0	G#248375 A-7-5, MH LL=53, PL=39 PI=14
	2D	24/12	2.0 - 4.0	5/10/10/10	20	20			Light brown, moist, medium dense, fine to coarse SAND, trace silt, some fine gravel, stratified -ALLUVIAL DEPOSIT-(SW)	G#248305 A-1-b, SW WC=4.4%
	3D	24/12	4.0 - 6.0	8/10/10/10	20	20			Light brown, moist, medium dense, fine to coarse SAND, trace gravel, stratified -ALLUVIAL DEPOSIT-(SW)	
	4D	24/20	6.0 - 8.0	9/8/8/7	16	16			Tan, moist, medium dense, fine to coarse SAND, stratified -ALLUVIAL DEPOSIT-(SW)	
	5D	24/16	8.0 - 10.0	7/7/7/7	14	14			Tan with faint orange mottling, moist, medium dense, fine to coarse SAND, stratified -ALLUVIAL DEPOSIT-(SW)	
								609.7	10.0	
25									Bottom of Exploration at 10.0 feet below ground surface.	

Remarks:
1. As-drilled coordinates of test borings determined by MaineDOT and provided to Haley & Aldrich in NAD 83 Maine 2000 West Zone Coordinate System. As-drilled coordinates related to station and offset information by TranSystems.

Stratification lines represent approximate boundaries between soil types; transitions may be gradual.
** Water level readings have been made at times and under conditions stated. Groundwater fluctuations may occur due to conditions other than those present at the time measurements were made.

Page 1 of 1
Boring No.: BB-RAR-103

Maine Department of Transportation
Soil/Rock Exploration Log
US CUSTOMARY UNITS

Project: Martin Memorial Bridge Replacement
Location: Route 232 - Rumford, Maine
Boring No.: BB-RAR-104
PIN: 15105.00

Driller:	Maine Test Borings	Elevation (ft.)	619.2	Auger ID/OD:	HSA-2.25 in. ID
Operator:	B. Enos	Datum:	NAVD 88	Sampler:	Split Spoon-1.375 in. ID
Logged By:	B. Babcock	Rig Type:	CME 45 Skid on Trailer	Hammer Wt./Fall:	S-140/30
Date Start/Finish:	06-07-2012/06-07-2012	Drilling Method:	HSA	Core Barrel:	--
Boring Location:	Sta. 06+38, 13.5' Rt.	Casing ID/OD:	--	Water Level *:	9.0
Hammer Efficiency Factor:	0.6	Hammer Type:	Automatic☐ Hydraulic☐ Rope & Cathead☒		

Definitions:
D = Split Spoon Sample
MD = Unsuccessful Split Spoon Sample attempt
U = Thin Wall Tube Sample
MU = Unsuccessful Thin Wall Tube Sample attempt
V = Insitu Vane Shear Test
MV = Unsuccessful Insitu Vane Shear Test attempt
R = Rock Core Sample
SSA = Solid Stem Auger
HSA = Hollow Stem Auger
RC = Roller Cone
WOH = weight of 140lb. hammer
WOR = weight of rods
WO1P = Weight of one person
S=u = Insitu Field Vane Shear Strength (psf)
T=v = Pocket Torvane Shear Strength (psf)
q=p = Unconfined Compressive Strength (ksf)
N-uncorrected = Raw field SPT N-value
Hammer Efficiency Factor = Annual Calibration Value
N=6-0 = SPT N-uncorrected corrected for hammer efficiency
N=6-0 = (Hammer Efficiency Factor/60%)*N-uncorrected
S=u (~1~a~b~) = Lab Vane Shear Strength (psf)
WC = water content, percent
LL = Liquid Limit
PL = Plastic Limit
PI = Plasticity Index
G = Grain Size Analysis
C = Consolidation Test

Sample Information

Depth (ft.)	Sample No.	Pen./Rec. (in.)	Sample Depth (ft.)	Blows (6 in.) Shear Strength (psf) or RQD (%)	N-uncorrected	N=6-0	Casing Blows	Elevation (ft.)	Visual Description and Remarks	Laboratory Testing Results/ AASHTO and Unified Class.
0	1D	24/14	0.0 - 2.0	1/2/3/4	5	5	HSA	616.2	Brown to red-brown, moist, medium stiff, elastic SILT, trace fine to medium sand, roots in top 6 in. -TOPSOIL-(MH) 3.0	G#248376 A-7-5, MH LL=50, PL=35 PI=15 WC=38.4%
	2D	24/14	2.0 - 4.0	2/5/8/14	13	13		615.2	Brown to light brown, moist, medium dense, silty fine to medium SAND, trace coarse sand and fine gravel, stratified -ALLUVIAL DEPOSIT-(SM) 4.0	G#248377 A-4, SC-SM LL=23, PL=17 PI=6 WC=14.1%
	3D	24/12	4.0 - 6.0	18/19/19/20	38	38			Tan, moist, dense, fine to coarse SAND, trace silt, little fine gravel, stratified -ALLUVIAL DEPOSIT-(SW-SM)	G#248306 A-1-b, SW-SM WC=5.9%
	4D	24/16	6.0 - 8.0	16/11/11/13	22	22			Tan, moist, medium dense, fine to coarse SAND, little gravel, stratified -ALLUVIAL DEPOSIT-(SW)	
	5D	24/16	8.0 - 10.0	10/8/7/9	15	15			Tan to gray-brown, moist to saturated, medium dense, fine to coarse SAND, trace gravel, stratified -ALLUVIAL DEPOSIT-(SW)	
								609.2	10.0	
25									Bottom of Exploration at 10.0 feet below ground surface.	

Remarks:
1. As-drilled coordinates of test borings determined by MaineDOT and provided to Haley & Aldrich in NAD 83 Maine 2000 West Zone Coordinate System. As-drilled coordinates related to station and offset information by TranSystems.

Stratification lines represent approximate boundaries between soil types; transitions may be gradual.
** Water level readings have been made at times and under conditions stated. Groundwater fluctuations may occur due to conditions other than those present at the time measurements were made.

Page 1 of 1
Boring No.: BB-RAR-104

Maine Department of Transportation
Soil/Rock Exploration Log
US CUSTOMARY UNITS

Project: Martin Memorial Bridge Replacement
Location: Route 232 - Rumford, Maine
Boring No.: BB-RAR-105
PIN: 15105.00

Driller:	Maine Test Borings	Elevation (ft.)	619.5	Auger ID/OD:	HSA-2.25 in. ID
Operator:	B. Enos	Datum:	NAVD 88	Sampler:	Split Spoon-1.375 in. ID
Logged By:	B. Babcock	Rig Type:	CME 45 Skid on Trailer	Hammer Wt./Fall:	S-140/30
Date Start/Finish:	06-07-2012/06-07-2012	Drilling Method:	HSA	Core Barrel:	--
Boring Location:	Sta. 07+79, 82.4' Rt.	Casing ID/OD:	--	Water Level *:	8.5
Hammer Efficiency Factor:	0.6	Hammer Type:	Automatic☐ Hydraulic☐ Rope & Cathead☒		

Definitions:
D = Split Spoon Sample
MD = Unsuccessful Split Spoon Sample attempt
U = Thin Wall Tube Sample
MU = Unsuccessful Thin Wall Tube Sample attempt
V = Insitu Vane Shear Test
MV = Unsuccessful Insitu Vane Shear Test attempt
R = Rock Core Sample
SSA = Solid Stem Auger
HSA = Hollow Stem Auger
RC = Roller Cone
WOH = weight of 140lb. hammer
WOR = weight of rods
WO1P = Weight of one person
S=u = Insitu Field Vane Shear Strength (psf)
T=v = Pocket Torvane Shear Strength (psf)
q=p = Unconfined Compressive Strength (ksf)
N-uncorrected = Raw field SPT N-value
Hammer Efficiency Factor = Annual Calibration Value
N=6-0 = SPT N-uncorrected corrected for hammer efficiency
N=6-0 = (Hammer Efficiency Factor/60%)*N-uncorrected
S=u (~1~a~b~) = Lab Vane Shear Strength (psf)
WC = water content, percent
LL = Liquid Limit
PL = Plastic Limit
PI = Plasticity Index
G = Grain Size Analysis
C = Consolidation Test

Sample Information

Depth (ft.)	Sample No.	Pen./Rec. (in.)	Sample Depth (ft.)	Blows (6 in.) Shear Strength (psf) or RQD (%)	N-uncorrected	N=6-0	Casing Blows	Elevation (ft.)	Visual Description and Remarks	Laboratory Testing Results/ AASHTO and Unified Class.
0	1D	24/20	0.0 - 2.0	1/3/2/3	5	5	HSA	615.5	Dark brown to brown, moist, medium stiff, SILT, little fine sand, trace clay, occasional stratification, roots in top 6 in. -TOPSOIL-(ML)	
	2D	24/14	2.0 - 4.0	1/2/3/3	5	5			Brown, moist to wet, medium stiff, SILT, little fine sand -TOPSOIL-(ML) 4.0	
	3D	24/16	4.0 - 6.0	2/5/6/8	11	11			Brown to light brown, moist to wet, medium dense, fine to coarse SAND, trace silt, stratified -ALLUVIAL DEPOSIT-(SW)	
	4D	24/14	6.0 - 8.0	13/16/17/14	33	33			Tan, moist, dense, fine to coarse SAND, little gravel, stratified -ALLUVIAL DEPOSIT-(SW)	
	5D	24/14	8.0 - 10.0	7/8/9/10	17	17			Tan to light brown, moist to wet, medium dense, fine to coarse SAND, little gravel, stratified -ALLUVIAL DEPOSIT-(SW)	
	6D	24/16	10.0 - 12.0	7/8/8/8	16	16			Light brown, wet, medium dense, fine to coarse SAND, trace gravel, stratified -ALLUVIAL DEPOSIT-(SW)	
								607.5	12.0	
25									Bottom of Exploration at 12.0 feet below ground surface.	

Remarks:
1. As-drilled coordinates of test borings determined by MaineDOT and provided to Haley & Aldrich in NAD 83 Maine 2000 West Zone Coordinate System. As-drilled coordinates related to station and offset information by TranSystems.

Stratification lines represent approximate boundaries between soil types; transitions may be gradual.
** Water level readings have been made at times and under conditions stated. Groundwater fluctuations may occur due to conditions other than those present at the time measurements were made.

Page 1 of 1
Boring No.: BB-RAR-105

Maine Department of Transportation
Soil/Rock Exploration Log
US CUSTOMARY UNITS

Project: Martin Memorial Bridge Replacement
Location: Route 232 - Rumford, Maine
Boring No.: BB-RAR-106
PIN: 15105.00

Driller:	Maine Test Borings	Elevation (ft.)	620.2	Auger ID/OD:	HSA-2.25 in. ID
Operator:	B. Enos	Datum:	NAVD 88	Sampler:	Split Spoon-1.375 in. ID
Logged By:	B. Babcock	Rig Type:	CME 45 Skid on Trailer	Hammer Wt./Fall:	S-140/30
Date Start/Finish:	06-07-2012/06-07-2012	Drilling Method:	HSA	Core Barrel:	--
Boring Location:	Sta. 09+84, 28.4' Rt.	Casing ID/OD:	--	Water Level *:	9.2
Hammer Efficiency Factor:	0.6	Hammer Type:	Automatic☐ Hydraulic☐ Rope & Cathead☒		

Definitions:
D = Split Spoon Sample
MD = Unsuccessful Split Spoon Sample attempt
U = Thin Wall Tube Sample
MU = Unsuccessful Thin Wall Tube Sample attempt
V = Insitu Vane Shear Test
MV = Unsuccessful Insitu Vane Shear Test attempt
R = Rock Core Sample
SSA = Solid Stem Auger
HSA = Hollow Stem Auger
RC = Roller Cone
WOH = weight of 140lb. hammer
WOR = weight of rods
WO1P = Weight of one person
S=u = Insitu Field Vane Shear Strength (psf)
T=v = Pocket Torvane Shear Strength (psf)
q=p = Unconfined Compressive Strength (ksf)
N-uncorrected = Raw field SPT N-value
Hammer Efficiency Factor = Annual Calibration Value
N=6-0 = SPT N-uncorrected corrected for hammer efficiency
N=6-0 = (Hammer Efficiency Factor/60%)*N-uncorrected
S=u (~1~a~b~) = Lab Vane Shear Strength (psf)
WC = water content, percent
LL = Liquid Limit
PL = Plastic Limit
PI = Plasticity Index
G = Grain Size Analysis
C = Consolidation Test

Sample Information

Depth (ft.)	Sample No.	Pen./Rec. (in.)	Sample Depth (ft.)	Blows (6 in.) Shear Strength (psf) or RQD (%)	N-uncorrected	N=6-0	Casing Blows	Elevation (ft.)	Visual Description and Remarks	Laboratory Testing Results/ AASHTO and Unified Class.
0	1D	24/20	0.0 - 2.0	1/2/3/3	5	5	HSA	616.2	Dark brown, moist, medium stiff, SILT, some fine sand, trace medium sand, occasional stratification, roots in top 6 in. -TOPSOIL-(ML)	G#248378 A-7-6, ML LL=41, PL=29 PI=12 WC=30.6%
	2D	24/14	2.0 - 4.0	2/1/1/2	2	2			Light brown, moist to wet, soft, SILT, some fine sand, trace clay, trace plant fibers, low plasticity to non-plastic -TOPSOIL-(ML) 4.0	
	3D	24/14	4.0 - 6.0	WOH/1/1/1	2	2			Light brown, moist, soft, SILT, some fine sand, trace plant fibers, occasional stratification -ALLUVIAL DEPOSIT-(ML)	
	4D	24/18	6.0 - 8.0	2/2/3/2	5	5		613.7	Red-brown, moist, medium stiff, SILT, little fine sand -ALLUVIAL DEPOSIT-(ML) 6.5	
	5D	24/18	8.0 - 10.0	3/2/2/2	4	4			Mottled red-brown to gray-brown, wet, loose, fine SAND, little silt -ALLUVIAL DEPOSIT-(SM) Gray-brown with red-brown, wet, very loose, fine SAND, little silt, possible faint mottling visible -ALLUVIAL DEPOSIT-(SM)	
	6D	24/24	10.0 - 12.0	2/2/3/7	5	5			Gray-brown with red-brown, saturated, loose, fine SAND, little medium to coarse sand, little silt, trace fine gravel in tip of spoon, stratified -ALLUVIAL DEPOSIT-(SM)	
								608.2	12.0	
25									Bottom of Exploration at 12.0 feet below ground surface.	

Remarks:
1. As-drilled coordinates of test borings determined by MaineDOT and provided to Haley & Aldrich in NAD 83 Maine 2000 West Zone Coordinate System. As-drilled coordinates related to station and offset information by TranSystems.

Stratification lines represent approximate boundaries between soil types; transitions may be gradual.
** Water level readings have been made at times and under conditions stated. Groundwater fluctuations may occur due to conditions other than those present at the time measurements were made.

Page 1 of 1
Boring No.: BB-RAR-106

HALEY & ALDRICH

STATE OF MAINE
DEPARTMENT OF TRANSPORTATION

BH-1510(500)X

WIN 15105.00

BRIDGE PLANS

BRIDGE NO. 3248

STATE OF MAINE WAYNE A. CHADBOURNE No. 10620 PROFESSIONAL ENGINEER

	BY	DATE
PROJ. MANAGER	S. BODGE	
DESIGN-DETAILED	B. STEINERT	02/2013
CHECKED-REVIEWED	W. CHADBOURNE	02/2013
DESIGN2-DETAILED2		
DESIGN3-DETAILED3		
REVISIONS 1		
REVISIONS 2		
REVISIONS 3		
REVISIONS 4		
FIELD CHANGES		

SIGNATURE
10620
P.E. NUMBER
5/29/2013
DATE

MARTIN MEMORIAL BRIDGE
ANDROSCOGGIN RIVER
RUMFORD OXFORD COUNTY

BORING LOGS

SHEET NUMBER
49
OF 95

Filename: ...\0030\Road\050_BoringLogs.dgn Division: BRIDGE Username: T SANDELL Date:5/29/2013

Maine Department of Transportation
Soil/Rock Exploration Log
US CUSTOMARY UNITS

Project: Martin Memorial Bridge Replacement
Location: Route 232 - Rumford, Maine
Boring No.: BB-RAR-107
PIN: 15105.00

Driller:	Maine Test Borings	**Elevation (ft.)**	612.9	**Auger ID/OD:**	--
Operator:	B. Enos	**Datum:**	NAVD 88	**Sampler:**	Split Spoon-1.375 in. ID
Logged By:	M. Snow	**Rig Type:**	CME 45 Skid on Trailer	**Hammer Wt./Fall:**	NW-300/24; S-140/30
Date Start/Finish:	06-12-2012/06-12-2012	**Drilling Method:**	NW Drive	**Core Barrel:**	--
Boring Location:	Sta. 11+80, 3.0' Lt.	**Casing ID/OD:**	NW-3.0 in. ID	**Water Level*:**	6.6
Hammer Efficiency Factor: 0.6		**Hammer Type:**	Automatic☐ Hydraulic☐ Rope & Catheads☒		

Definitions:
D = Split Spoon Sample; MD = Unsuccessful Split Spoon Sample attempt; U = Thin Wall Tube Sample; MU = Unsuccessful Thin Wall Tube Sample attempt; V = Insitu Vane Shear Test; MV = Unsuccessful Insitu Vane Shear Test attempt
R = Rock Core Sample; SSA = Solid Stem Auger; HSA = Hollow Stem Auger; RC = Roller Cone; WOH = weight of 140lb. hammer; WOR = weight of rods; WO1P = Weight of one person
S-u = Insitu Field Vane Shear Strength (psf); T-v = Pocket Torvane Shear Strength (psf); q-p = Unconfined Compressive Strength (ksf); N-uncorrected = Raw field SPT N-value; Hammer Efficiency Factor = Annual Calibration Value; N-60 = SPT N-uncorrected corrected for hammer efficiency; N-60 = (Hammer Efficiency Factor/60%)*N-uncorrected
S-u=(-1+a-b+) = Lab Vane Shear Strength (psf); WC = water content, percent; LL = Liquid Limit; PL = Plastic Limit; PI = Plasticity Index; G = Grain Size Analysis; C = Consolidation Test

Depth (ft.)	Sample No.	Pen./Rec. (in.)	Sample Depth (ft.)	Blows (/6 in.) Shear Strength (psf) or RQD (%)	N-uncorrected	N-60	Casing Blows	Elevation (ft.)	Visual Description and Remarks	Laboratory Testing Results/ AASHTO and Unified Class.
0	1D	24/14	0.0 - 2.0	1/2/2/1	4	4	NW Push		Dark brown, moist, soft, SILT, little fine sand, roots -TOPSOIL-(ML)	
	2D	24/18	2.0 - 4.0	1/1/2/1	3	3			Dark brown, moist, soft, SILT, little fine sand, roots -TOPSOIL-(ML)	
								608.9	4.0	
5	3D	24/20	4.0 - 6.0	1/1/2/1	3	3			Dark brown to brown, moist, soft, mottled fine sandy SILT -ALLUVIAL DEPOSIT-(ML)	
								606.9	6.0	
	4D	24/20	6.0 - 8.0	1/2/2/2	4	4			Brown to gray-brown, wet, very loose, silty fine SAND, trace organics -ALLUVIAL DEPOSITS-(SM)	
	5D	24/24	8.0 - 10.0	3/3/4/4	7	7			Brown to gray-brown, wet, loose, fine SAND, little medium sand, trace silt, stratified, micaceous -ALLUVIAL DEPOSITS-(SP)	
10								598.9	14.0	
15	6D	24/12	14.0 - 16.0	1/2/4/6	6	6			Gray, wet, loose, fine to medium SAND, trace coarse sand, trace gravel, wood pieces -ALLUVIAL DEPOSIT-(SP)	
	7D	24/18	19.0 - 21.0	8/5/7/6	12	12			Gray, wet, medium dense, fine SAND, little medium sand, trace coarse sand, trace gravel, stratified -ALLUVIAL DEPOSIT-(SP)	
20									Brown to gray-brown, loose, fine SAND, some medium sand, little coarse sand, trace silt, trace gravel, stratified, rust-brown sand layer and sandy silt seam -ALLUVIAL DEPOSIT-(SP)	
25	8D	24/20	24.0 - 26.0	5/5/5/4	10	10			Gray-brown, loose, wet, fine to coarse SAND, trace gravel, well graded -ALLUVIAL DEPOSIT-(SW)	
30	9D	24/12	29.0 - 31.0	3/3/4/5	7	7			Gray-brown, wet, loose, fine to medium SAND, little coarse sand, trace gravel -ALLUVIAL DEPOSIT-(SP)	
35	10D	24/12	34.0 - 36.0	2/4/5/6	9	9				
								576.9	36.0	
40									Bottom of Exploration at 36.0 feet below ground surface.	
45										
50										

Remarks:
1. As-drilled coordinates of test borings determined by MaineDOT and provided to Haley & Aldrich in NAD 83 Maine 2000 West Zone Coordinate System. As-drilled coordinates related to station and offset information by TranSystems.

Stratification lines represent approximate boundaries between soil types; transitions may be gradual.
* Water level readings have been made at times and under conditions stated. Groundwater fluctuations may occur due to conditions other than those present at the time measurements were made.

Maine Department of Transportation
Soil/Rock Exploration Log
US CUSTOMARY UNITS

Project: Martin Memorial Bridge Replacement
Location: Route 232 - Rumford, Maine
Boring No.: BB-RAR-108
PIN: 15105.00

Driller:	Maine Test Borings	**Elevation (ft.)**	615.5	**Auger ID/OD:**	--
Operator:	B. Enos	**Datum:**	NAVD 88	**Sampler:**	Split Spoon-1.375 in. ID
Logged By:	B. Babcock	**Rig Type:**	CME 45 Skid on Trailer	**Hammer Wt./Fall:**	NW-300/24; S-140/30
Date Start/Finish:	06-07-2012/06-08-2012	**Drilling Method:**	NW Drive	**Core Barrel:**	--
Boring Location:	Sta. 12+71, 1.0' Lt.	**Casing ID/OD:**	NW-3.0 in. ID	**Water Level*:**	4.3
Hammer Efficiency Factor: 0.6		**Hammer Type:**	Automatic☐ Hydraulic☐ Rope & Catheads☒		

Definitions:
D = Split Spoon Sample; MD = Unsuccessful Split Spoon Sample attempt; U = Thin Wall Tube Sample; MU = Unsuccessful Thin Wall Tube Sample attempt; V = Insitu Vane Shear Test; MV = Unsuccessful Insitu Vane Shear Test attempt
R = Rock Core Sample; SSA = Solid Stem Auger; HSA = Hollow Stem Auger; RC = Roller Cone; WOH = weight of 140lb. hammer; WOR = weight of rods; WO1P = Weight of one person
S-u = Insitu Field Vane Shear Strength (psf); T-v = Pocket Torvane Shear Strength (psf); q-p = Unconfined Compressive Strength (ksf); N-uncorrected = Raw field SPT N-value; Hammer Efficiency Factor = Annual Calibration Value; N-60 = SPT N-uncorrected corrected for hammer efficiency; N-60 = (Hammer Efficiency Factor/60%)*N-uncorrected
S-u=(-1+a-b+) = Lab Vane Shear Strength (psf); WC = water content, percent; LL = Liquid Limit; PL = Plastic Limit; PI = Plasticity Index; G = Grain Size Analysis; C = Consolidation Test

Depth (ft.)	Sample No.	Pen./Rec. (in.)	Sample Depth (ft.)	Blows (/6 in.) Shear Strength (psf) or RQD (%)	N-uncorrected	N-60	Casing Blows	Elevation (ft.)	Visual Description and Remarks	Laboratory Testing Results/ AASHTO and Unified Class.
0	1D	24/16	0.0 - 2.0	1/1/1/1	2	2	1		Dark brown to brown, moist, soft, fine sandy SILT, roots in top 6 in. -TOPSOIL-(ML)	
							1			
	2D	24/16	2.0 - 4.0	1/1/1/WOH	2	2	1		Brown to light brown, moist to wet, SILT, some fine sand, trace clay, low plasticity to non-plastic -TOPSOIL-(ML)	
							1			
5	3D	24/20	4.0 - 6.0	1/WOH/1/2	1	1	2		Light brown, wet, very soft, SILT, some fine sand, trace clay, low plasticity to non-plastic -TOPSOIL-(ML)	
							6			
	4D	24/22	6.0 - 8.0	2/2/1/2	3	3	8	609.5	6.0 Light brown to gray-brown, saturated, very loose, fine SAND, little medium to coarse sand, trace silt, stratified -ALLUVIAL DEPOSIT-(SP-SM)	
							10			
	5D	24/20	8.0 - 10.0	2/4/3/4	7	7	17		Gray-brown, saturated, loose, fine to medium SAND, trace coarse sand, stratified -ALLUVIAL DEPOSIT-(SW)	
10							22			
							20			
							17			
							18			
							22			
15	6D	24/12	14.0 - 16.0	2/2/4/3	6	6	3		Light brown, saturated, loose, fine to coarse SAND, trace gravel, stratified -ALLUVIAL DEPOSIT-(SW)	
							6			
							22			
							17			
							19			
20	7D	24/12	19.0 - 21.0	2/2/4/4	6	6	3		Light brown, saturated, loose, medium to coarse SAND, little gravel, trace fine sand -ALLUVIAL DEPOSIT-(SW)	
							4			
							17			
							17			
							18		Note: Driller notes gravel layer between approximately 22.5 and 23.5 ft.	
25	8D	24/14	24.0 - 26.0	3/3/3/4	6	6	9		Light brown, saturated, loose, fine to coarse SAND, trace gravel, stratified -ALLUVIAL DEPOSIT-(SW)	
							12			
							13			
							17			
							18			
30	9D	24/10	29.0 - 31.0	1/2/3/11	5	5	11		Light brown, saturated, loose, fine to coarse SAND, trace gravel, trace silt, stratified -ALLUVIAL DEPOSIT-(SW)	
							22			
							47			
							34			
							35			
35	10D	24/2	34.0 - 36.0	10/3/4/5	7	7	15		Light brown, saturated, loose, fine to coarse SAND, little coarse gravel, 1 in. piece of gravel in tip of spoon, attempted overdrive with no recovery -ALLUVIAL DEPOSIT-(SW)	
							27			
							35			
							37			
							39			
40	11D	24/10	39.0 - 41.0	5/4/4/5	8	8			Light brown, saturated, loose, fine to coarse SAND, trace gravel, occasional stratification -ALLUVIAL DEPOSIT-(SW)	
								574.5	41.0	
									Bottom of Exploration at 41.0 feet below ground surface.	
45										
50										

Remarks:
1. As-drilled coordinates of test borings determined by MaineDOT and provided to Haley & Aldrich in NAD 83 Maine 2000 West Zone Coordinate System. As-drilled coordinates related to station and offset information by TranSystems.

Stratification lines represent approximate boundaries between soil types; transitions may be gradual.
* Water level readings have been made at times and under conditions stated. Groundwater fluctuations may occur due to conditions other than those present at the time measurements were made.

Maine Department of Transportation
Soil/Rock Exploration Log
US CUSTOMARY UNITS

Project: Martin Memorial Bridge Replacement
Location: Route 232 - Rumford, Maine
Boring No.: BB-RAR-109
PIN: 15105.00

Driller:	Maine Test Borings	**Elevation (ft.)**	619.0	**Auger ID/OD:**	--
Operator:	B. Enos	**Datum:**	NAVD 88	**Sampler:**	Split Spoon-1.375 in. ID
Logged By:	B. Babcock/M. Snow	**Rig Type:**	CME 45 Skid on Trailer	**Hammer Wt./Fall:**	NW-300/24; S-140/30
Date Start/Finish:	06-11-2012/06-12-2012	**Drilling Method:**	NW Drive	**Core Barrel:**	--
Boring Location:	Sta. 13+71, 2.1' Rt.	**Casing ID/OD:**	NW-3.0 in. ID	**Water Level*:**	12.5
Hammer Efficiency Factor: 0.6		**Hammer Type:**	Automatic☐ Hydraulic☐ Rope & Catheads☒		

Definitions:
D = Split Spoon Sample; MD = Unsuccessful Split Spoon Sample attempt; U = Thin Wall Tube Sample; MU = Unsuccessful Thin Wall Tube Sample attempt; V = Insitu Vane Shear Test; MV = Unsuccessful Insitu Vane Shear Test attempt
R = Rock Core Sample; SSA = Solid Stem Auger; HSA = Hollow Stem Auger; RC = Roller Cone; WOH = weight of 140lb. hammer; WOR = weight of rods; WO1P = Weight of one person
S-u = Insitu Field Vane Shear Strength (psf); T-v = Pocket Torvane Shear Strength (psf); q-p = Unconfined Compressive Strength (ksf); N-uncorrected = Raw field SPT N-value; Hammer Efficiency Factor = Annual Calibration Value; N-60 = SPT N-uncorrected corrected for hammer efficiency; N-60 = (Hammer Efficiency Factor/60%)*N-uncorrected
S-u=(-1+a-b+) = Lab Vane Shear Strength (psf); WC = water content, percent; LL = Liquid Limit; PL = Plastic Limit; PI = Plasticity Index; G = Grain Size Analysis; C = Consolidation Test

Depth (ft.)	Sample No.	Pen./Rec. (in.)	Sample Depth (ft.)	Blows (/6 in.) Shear Strength (psf) or RQD (%)	N-uncorrected	N-60	Casing Blows	Elevation (ft.)	Visual Description and Remarks	Laboratory Testing Results/ AASHTO and Unified Class.
0	1D	24/16	0.0 - 2.0	1/1/2/1	3	3	NW Push		Dark brown, moist, soft, SILT, some fine sand, roots in top 6 in. -TOPSOIL-(ML)	
								617.0	2.0	
	2D	24/20	2.0 - 4.0	1/1/1/1	2	2			Brown, dry, very loose, silty fine SAND -ALLUVIAL DEPOSIT-(SM)	
	3D	24/20	4.0 - 6.0	1/WOH/1/1	1	1	4		Brown, moist, very loose, fine SAND, some silt -ALLUVIAL DEPOSIT-(SM)	
5							4			
	4D	24/16	6.0 - 8.0	1/1/1/WOH	2	2	4		Brown to gray-brown, moist, very loose, fine SAND, some silt -ALLUVIAL DEPOSIT-(SM)	
							6			
	5D	24/22	8.0 - 10.0	1/1/1/1	2	2	6		Brown with gray-brown, moist to wet, very loose, fine SAND, little silt -ALLUVIAL DEPOSIT-(SM)	
10							6			
							7			
							8			
							9			
							9			
15	6D	24/12	14.0 - 16.0	3/4/3/4	7	7	5		Gray-brown with occasional red seams, saturated, loose, fine to coarse SAND, stratified -ALLUVIAL DEPOSIT-(SW)	
							8			
							17			
							19			
							24			
20	7D	24/12	19.0 - 21.0	3/2/3/3	5	5	3		Gray-brown, saturated, loose, fine to coarse SAND, trace gravel, stratified -ALLUVIAL DEPOSIT-(SW)	
							4			
							4			
							17			
							41			
25	8D	24/15	24.0 - 26.0	4/5/6/8	11	11	17		Gray-brown, wet, medium dense, fine to medium SAND, little coarse sand, trace fine gravel, trace silt -ALLUVIAL DEPOSIT-(SP)	
							12			
							18			
							26			
							27			
								590.0	29.0	
30	9D	24/18	29.0 - 31.0	4/5/5/5	10	10	14		Rust-brown, wet, loose, fine to medium SAND, little coarse sand, little silt, trace gravel -ALLUVIAL DEPOSIT-(SP-SM)	
							19			
							26			
							30			
							35			
35	10D	24/20	34.0 - 36.0	5/5/6/7	11	11	24		Rust-brown, wet, medium dense, fine to medium SAND, little coarse sand, little silt, trace gravel -ALLUVIAL DEPOSIT-(SP-SM)	
							21			
							29			
							42			
							44			
40	11D	24/20	39.0 - 41.0	4/5/5/6	10	10			Rust-brown, wet, loose, fine to medium SAND, little gravel, trace silt -ALLUVIAL DEPOSIT-(SW)	
								578.0	41.0	
									Bottom of Exploration at 41.0 feet below ground surface.	
45										
50										

Remarks:
1. As-drilled coordinates of test borings determined by MaineDOT and provided to Haley & Aldrich in NAD 83 Maine 2000 West Zone Coordinate System. As-drilled coordinates related to station and offset information by TranSystems.

Stratification lines represent approximate boundaries between soil types; transitions may be gradual.
* Water level readings have been made at times and under conditions stated. Groundwater fluctuations may occur due to conditions other than those present at the time measurements were made.

HALEY & ALDRICH

STATE OF MAINE
DEPARTMENT OF TRANSPORTATION
BH-1510(500)X
WIN 15105.00
BRIDGE NO. 3248
BRIDGE PLANS

STATE OF MAINE WAYNE A. CHADBOURNE No. 10620 PROFESSIONAL ENGINEER LICENSED

SIGNATURE		
10620	P.E. NUMBER	
5/29/2013	DATE	

PROJ. MANAGER	S. BODGE	BY	DATE
DESIGN-DETAILED	B. STEINERT	B. STEINERT	02/2013
CHECKED-REVIEWED	W. CHADBOURNE	W. CHADBOURNE	02/2013
DESIGN2-DETAILED2			
DESIGN3-DETAILED3			
REVISIONS 1			
REVISIONS 2			
REVISIONS 3			
REVISIONS 4			
FIELD CHANGES			

MARTIN MEMORIAL BRIDGE
ANDROSCOGGIN RIVER
RUMFORD OXFORD COUNTY

BORING LOGS

SHEET NUMBER
50
OF 95

Filename: ...\0030\Road\051_BoringLogs.dgn Division: BRIDGE Username: T SANDELL Date:5/29/2013

Maine Department of Transportation

Soil/Rock Exploration Log
US CUSTOMARY UNITS

Project:	Martin Memorial Bridge Replacement	**Boring No.:**	BB-RAR-110
Location:	Route 232 - Rumford, Maine	**PIN:**	15105.00
Driller:	Maine Test Borings	**Elevation (ft.)**	615.8
Auger ID/OD:	--		
Operator:	B. Enos	**Datum:**	NAVD 88
Sampler:	Split Spoon-1.375 in. ID		
Logged By:	B. Babcock/M. Snow	**Rig Type:**	CME 45 Skid on Trailer
Hammer Wt./Fall:	NW-300/24; S-140/30		
Date Start/Finish:	06-12-2012/06-18-2012	**Drilling Method:**	NW Drive
Core Barrel:	--		
Boring Location:	Sta. 15+28, 22.7' Lt.	**Casing ID/OD:**	NW-3.0 in. ID
Water Level*:	11.3 ft		
Hammer Efficiency Factor:	0.6	**Hammer Type:**	Automatic☐ Hydraulic☐ Rope & Cathead☒

Definitions:
D = Split Spoon Sample
MD = Unsuccessful Split Spoon Sample attempt
U = Thin Wall Tube Sample
MU = Unsuccessful Thin Wall Tube Sample attempt
V = Insitu Vane Shear Test
MV = Unsuccessful Insitu Vane Shear Test attempt
R = Rock Core Sample
SSA = Solid Stem Auger
HSA = Hollow Stem Auger
RC = Roller Cone
WOH = weight of 140lb. hammer
WOR = weight of rods
WO1P = Weight of one person
S=u=(~t~a~b~) = Insitu Field Vane Shear Strength (psf)
T=v = Pocket Torvane Shear Strength (psf)
q=p = Unconfined Compressive Strength (ksf)
N-uncorrected = Raw field SPT N-value
Hammer Efficiency Factor = Annual Calibration Value
N=6-0 = SPT N-uncorrected corrected for hammer efficiency
N=6-0 = (Hammer Efficiency Factor/60%)*N-uncorrected
S=u=(~f~a~b~) = Lab Vane Shear Strength (psf)
WC = water content, percent
LL = Liquid Limit
PL = Plastic Limit
PI = Plasticity Index
G = Grain Size Analysis
C = Consolidation Test

Depth (ft.)	Sample No.	Pen./Rec. (in.)	Sample Depth (ft.)	Blows (# lb.) Shear Strength (psf) or RQD (%)	N-uncorrected	N=6-0	Casing Blows	Elevation (ft.)	Visual Description and Remarks	Laboratory Testing Results/ AASHTO and Unified Class.
0	1D	24/20	0.0 - 2.0	2/2/2/1	4	4	NW Push		Dark brown, moist, soft, fine sandy SILT, rootlets -TOPSOIL-(ML)	
	2D	24/20	2.0 - 4.0	1/1/1/1	2	2			Dark brown, moist, soft, fine sandy SILT, rootlets -TOPSOIL-(ML)	
								612.3	3.5'	
5	3D	24/20	4.0 - 6.0	1/1/2/1	3	3	12		Brown, moist, very loose, fine SAND, some silt -ALLUVIAL DEPOSIT-(SM)	
							5			
	4D	24/18	6.0 - 8.0	1/WOH/1/WOH	1	1	7		Brown, wet, very loose, fine SAND, little silt -ALLUVIAL DEPOSIT-(SP-SM)	
							4			
	5D	24/18	8.0 - 10.0	1/WOH/WOH/1	0	0	4		Brown, wet, very loose, fine SAND, some silt, contains organics -ALLUVIAL DEPOSIT-(SM)	
10							7			
							5			
							6			
							7			
15	6D	24/20	14.0 - 16.0	1/WOH/WOH/1	1	1	4		Gray-brown to gray, saturated, very loose, fine SAND, trace medium sand, silt and fine gravel, trace fibrous organic soil, stratified, faint organic odor -ALLUVIAL DEPOSIT-(SP-SM)	G#248309 A-3, SP-SM WC=36.5% GTX#121945 DS-1 FA=36.9°o c=92 psf
							4			
							6			
							6			
							7			
20	7D	24/16	19.0 - 21.0	3/3/3/5	6	6	12		Gray, saturated, loose, fine SAND, trace medium sand, silt and fine gravel, trace fibrous organic soil, stratified, faint organic odor -ALLUVIAL DEPOSIT-(SP-SM)	G#248309 A-3, SP-SM WC=36.5% GTX#121945 DS-1 FA=36.9°o c=92 psf
							12			
							17			
							24			
							32			
								591.8	24.0	
25	8D	24/16	24.0 - 26.0	5/5/4/4	9	9	14		Gray-brown, saturated, loose, fine to coarse SAND, trace gravel, stratified -ALLUVIAL DEPOSIT-(SW) Note: Drilling mud used from 26.0 to 31.0 ft.	
							14			
							25			
							36			
							44			
30	9D	24/14	29.0 - 31.0	3/4/6/9	10	10	21		Gray, saturated, loose, fine to coarse SAND, trace gravel, stratified -ALLUVIAL DEPOSIT-(SW)	
							24			
							31			
							45			
							56			
35	10D	24/12	34.0 - 36.0	5/6/9/11	15	15	21		Gray, saturated, medium dense, fine to coarse SAND, trace gravel, stratified -ALLUVIAL DEPOSIT-(SW)	
							27			
							41			
							52			
							60			
40	11D	24/16	39.0 - 41.0	8/5/8/10	13	13	25		Light brown, saturated, medium dense, fine to coarse SAND, trace gravel, stratified -ALLUVIAL DEPOSIT-(SW)	
							26			
							33			
							51			
							66			
45	12D	24/12	44.0 - 46.0	7/11/12/16	23	23	38		Light brown, saturated, medium dense, fine to medium SAND, trace coarse sand, stratified -ALLUVIAL DEPOSIT-(SW)	
							43			
							63			
							84			
							87			
50	13D	24/10	49.0 - 51.0	5/7/10/12	17	17	54		Light brown, saturated, medium dense, fine to coarse SAND, trace gravel, stratified	

Remarks:

1. As-drilled coordinates of test borings determined by MaineDOT and provided to Haley & Aldrich in NAD 83 Maine 2000 West Zone Coordinate System. As-drilled coordinates related to station and offset information by TranSystems.
2. DS-1 = direct shear test no.; FA = friction angle; c = cohesion; psf = pounds per square foot.

Stratification lines represent approximate boundaries between soil types; transitions may be gradual.

* Water level readings have been made at times and under conditions stated. Groundwater fluctuations may occur due to conditions other than those present at the time measurements were made.

Boring No.: BB-RAR-110

Maine Department of Transportation

Soil/Rock Exploration Log
US CUSTOMARY UNITS

Project:	Martin Memorial Bridge Replacement	**Boring No.:**	BB-RAR-110
Location:	Route 232 - Rumford, Maine	**PIN:**	15105.00
Driller:	Maine Test Borings	**Elevation (ft.)**	615.8
Auger ID/OD:	--		
Operator:	B. Enos	**Datum:**	NAVD 88
Sampler:	Split Spoon-1.375 in. ID		
Logged By:	B. Babcock/M. Snow	**Rig Type:**	CME 45 Skid on Trailer
Hammer Wt./Fall:	NW-300/24; S-140/30		
Date Start/Finish:	06-12-2012/06-18-2012	**Drilling Method:**	NW Drive
Core Barrel:	--		
Boring Location:	Sta. 15+28, 22.7' Lt.	**Casing ID/OD:**	NW-3.0 in. ID
Water Level*:	11.3 ft		
Hammer Efficiency Factor:	0.6	**Hammer Type:**	Automatic☐ Hydraulic☐ Rope & Cathead☒

Definitions:
D = Split Spoon Sample
MD = Unsuccessful Split Spoon Sample attempt
U = Thin Wall Tube Sample
MU = Unsuccessful Thin Wall Tube Sample attempt
V = Insitu Vane Shear Test
MV = Unsuccessful Insitu Vane Shear Test attempt
R = Rock Core Sample
SSA = Solid Stem Auger
HSA = Hollow Stem Auger
RC = Roller Cone
WOH = weight of 140lb. hammer
WOR = weight of rods
WO1P = Weight of one person
S=u=(~t~a~b~) = Insitu Field Vane Shear Strength (psf)
T=v = Pocket Torvane Shear Strength (psf)
q=p = Unconfined Compressive Strength (ksf)
N-uncorrected = Raw field SPT N-value
Hammer Efficiency Factor = Annual Calibration Value
N=6-0 = SPT N-uncorrected corrected for hammer efficiency
N=6-0 = (Hammer Efficiency Factor/60%)*N-uncorrected
S=u=(~f~a~b~) = Lab Vane Shear Strength (psf)
WC = water content, percent
LL = Liquid Limit
PL = Plastic Limit
PI = Plasticity Index
G = Grain Size Analysis
C = Consolidation Test

Depth (ft.)	Sample No.	Pen./Rec. (in.)	Sample Depth (ft.)	Blows (# lb.) Shear Strength (psf) or RQD (%)	N-uncorrected	N=6-0	Casing Blows	Elevation (ft.)	Visual Description and Remarks	Laboratory Testing Results/ AASHTO and Unified Class.
50							45		-ALLUVIAL DEPOSIT-(SW)	
							65			
							91			
							83			
55	14D	24/8	54.0 - 56.0	3/6/7/9	13	13	69		Light brown, saturated, medium dense, fine to medium SAND, trace coarse sand, silt and fine gravel, stratified -ALLUVIAL DEPOSIT-(SP)	G#248310 A-1-b, SP
							61			
							72			
							100			
							90			
60	15D	24/14	59.0 - 61.0	5/6/6/7	12	12	71		Light brown, saturated, medium dense, fine to medium SAND, trace coarse sand, silt and fine gravel, stratified -ALLUVIAL DEPOSIT-(SP)	G#248310 A-1-b, SP
							65			
							86			
							100			
							110			
65	16D	24/12	64.0 - 66.0	4/5/6/6	11	11	73		Light brown, saturated, medium dense, fine to coarse SAND, trace gravel, stratified -ALLUVIAL DEPOSIT-(SW)	
							92			
							78			
							88			
							84			
70	17D	24/8	69.0 - 71.0	5/6/8/9	14	14	74		Light gray-brown, saturated, medium dense, fine to coarse SAND, trace gravel, weakly stratified -ALLUVIAL DEPOSIT-(SW)	
							76			
							92			
							128			
							120			
75	18D	24/14	74.0 - 76.0	4/7/8/10	15	15	82		Light gray-brown, saturated, medium dense, fine to coarse SAND, trace gravel, stratified -ALLUVIAL DEPOSIT-(SW)	
							84			
							90			
							100			
							133			
80	19D	24/16	79.0 - 81.0	5/9/11/14	20	20	90		Light gray-brown, saturated, medium dense, fine to medium SAND, trace coarse sand, silt and fine gravel, stratified -ALLUVIAL DEPOSIT-(SP)	G#248311 A-3, SP
							100			
							129			
							146			
							130			
85	20D	24/8	84.0 - 86.0	5/7/11/12	18	18	90		Gray-brown, saturated, medium dense, fine to medium SAND, trace coarse sand, silt and fine gravel, stratified -ALLUVIAL DEPOSIT-(SP)	G#248311 A-3, SP
							80			
							96			
							136			
							140			
90	21D	24/16	89.0 - 91.0	4/6/6/6	12	12	80		Gray-brown, saturated, medium dense, fine to coarse SAND, trace gravel, stratified -ALLUVIAL DEPOSIT-(SW)	
							84			
							87			
							101			
							110			
95	22D	24/16	94.0 - 96.0	6/7/8/9	15	15	86		Gray-brown, saturated, medium dense, fine to coarse SAND, trace gravel, stratified -ALLUVIAL DEPOSIT-(SW)	
							80			
							113			
							116			
							124			
100	23D	24/8	99.0 - 101.0	6/7/9/10	16	16	89		Gray-brown, saturated, medium dense, fine to coarse SAND, trace silt, little fine gravel	G#248312 A-1-b, SP

Remarks:

1. As-drilled coordinates of test borings determined by MaineDOT and provided to Haley & Aldrich in NAD 83 Maine 2000 West Zone Coordinate System. As-drilled coordinates related to station and offset information by TranSystems.
2. DS-1 = direct shear test no.; FA = friction angle; c = cohesion; psf = pounds per square foot.

Stratification lines represent approximate boundaries between soil types; transitions may be gradual.

* Water level readings have been made at times and under conditions stated. Groundwater fluctuations may occur due to conditions other than those present at the time measurements were made.

Boring No.: BB-RAR-110

Maine Department of Transportation

Soil/Rock Exploration Log
US CUSTOMARY UNITS

Project:	Martin Memorial Bridge Replacement	**Boring No.:**	BB-RAR-110
Location:	Route 232 - Rumford, Maine	**PIN:**	15105.00
Driller:	Maine Test Borings	**Elevation (ft.)**	615.8
Auger ID/OD:	--		
Operator:	B. Enos	**Datum:**	NAVD 88
Sampler:	Split Spoon-1.375 in. ID		
Logged By:	B. Babcock/M. Snow	**Rig Type:**	CME 45 Skid on Trailer
Hammer Wt./Fall:	NW-300/24; S-140/30		
Date Start/Finish:	06-12-2012/06-18-2012	**Drilling Method:**	NW Drive
Core Barrel:	--		
Boring Location:	Sta. 15+28, 22.7' Lt.	**Casing ID/OD:**	NW-3.0 in. ID
Water Level*:	11.3 ft		
Hammer Efficiency Factor:	0.6	**Hammer Type:**	Automatic☐ Hydraulic☐ Rope & Cathead☒

Definitions:
D = Split Spoon Sample
MD = Unsuccessful Split Spoon Sample attempt
U = Thin Wall Tube Sample
MU = Unsuccessful Thin Wall Tube Sample attempt
V = Insitu Vane Shear Test
MV = Unsuccessful Insitu Vane Shear Test attempt
R = Rock Core Sample
SSA = Solid Stem Auger
HSA = Hollow Stem Auger
RC = Roller Cone
WOH = weight of 140lb. hammer
WOR = weight of rods
WO1P = Weight of one person
S=u=(~t~a~b~) = Insitu Field Vane Shear Strength (psf)
T=v = Pocket Torvane Shear Strength (psf)
q=p = Unconfined Compressive Strength (ksf)
N-uncorrected = Raw field SPT N-value
Hammer Efficiency Factor = Annual Calibration Value
N=6-0 = SPT N-uncorrected corrected for hammer efficiency
N=6-0 = (Hammer Efficiency Factor/60%)*N-uncorrected
S=u=(~f~a~b~) = Lab Vane Shear Strength (psf)
WC = water content, percent
LL = Liquid Limit
PL = Plastic Limit
PI = Plasticity Index
G = Grain Size Analysis
C = Consolidation Test

Depth (ft.)	Sample No.	Pen./Rec. (in.)	Sample Depth (ft.)	Blows (# lb.) Shear Strength (psf) or RQD (%)	N-uncorrected	N=6-0	Casing Blows	Elevation (ft.)	Visual Description and Remarks	Laboratory Testing Results/ AASHTO and Unified Class.
100							85		-ALLUVIAL DEPOSIT-(SP)	
							120			
							112			
							120			
105	24D	24/18	104.0 - ~~106.0~~	3/5/6/7	11	11	74		Light brown, saturated, medium dense, fine to coarse SAND, trace silt, little fine gravel -ALLUVIAL DEPOSIT-(SP)	G#248312 A-1-b, SP
							80			
							113			
							140			
							169			
110	MD		109.0 - ~~111.0~~	5/11/19/17	30	30	108		No recovery, residue in spoon similar to 24D. Probable pushed gravel.	
							105			
							210			
							140			
							153			
115	25D	24/14	114.0 - ~~116.0~~	11/18/25/23	43	43	129		Light brown with gray-brown, saturated, dense, fine to medium SAND, trace coarse sand, stratified -ALLUVIAL DEPOSIT-(SW)	
							145			
							164			
							180			
							265			
120	MD		119.0 - ~~121.0~~	6/11/12/12	23	23	96		No recovery, re-drove spoon without recovery. Residue in spoon similar to above.	
							126			
							162			
							142			
							192			
125							131		Note: 18 in. blown sands in borehole prior to sampling at 124.0 ft. Drove spoon from 122.5 to 126 ft. Recovered 14 in. light brown, saturated, fine to coarse SAND, little gravel, grading from fine to coarse material in bottom 6 in. of recovery (SW). Note: Drill action and cuttings indicate gravel between approximately 126.0 to 129.0 ft. Near total water loss while floating rods in/out of borehole prior to sampling.	
							154			
							146			
							145			
							180			
130	26D	24/13	129.0 - ~~131.0~~	16/36/30/15	66	66	180	486.4	Light brown, saturated, very dense, medium to coarse SAND, little gravel, trace fine sand -ALLUVIAL DEPOSIT-(SW)	
							238		129.4	
							195		Light brown with red-brown and gray, saturated, very dense, highly weathered BEDROCK interbedded with seams of fine to coarse SAND, trace gravel, mica specks throughout -GLACIAL TILL-(GW) Note: Advanced borehole to 134.0 ft and collected sample with NW casing at 132.0 ft.	
							190			
							157			
135	27D	24/12	134.0 - ~~136.0~~	11/58/77/54	135	135	216		Olive-brown to red-brown to green-gray, wet, very dense, fine to coarse GRAVEL, some fine to coarse sand, trace silt, poorly sorted and well bonded in-situ with frequent pockets of slightly to highly weathered bedrock, mica fragments, pieces and specks throughout recovery -GLACIAL TILL-(GW-GM)	
							387			
							334(8.0")	479.3	136.5	
	R1	60/54	137.0 - ~~142.0~~	RQD = 80%					Top of Bedrock at El. 479.3 Light green-gray, coarse grained, micaceous quartz PEGMATITE, hard, very slight weathering. Joints dipping at low angles, moderately close, open, discolored. Rock Mass Quality=Good Recovery=90% R1 Core Times (min:sec): 137.0-138.0' (4:03); 138.0-139.0' (2:45); 139.0-140.0' (3:16); 140.0-141.0' (3:50); 141.0-142.0' (3:37) Note: Borehole open to 141.5 ft upon completion of core run. 6 in. of core left in borehole. Total water loss between 138.0 and 142.0 ft.	
140										
	R2	53/53	142.0 - ~~146.4~~	RQD = 97%					Light green-gray, coarse grained, micaceous quartz PEGMATITE, hard, very slight weathering. Joints dipping at low angles, moderately close, open, discolored. Rock Mass Quality=Excellent Recovery=97% R2 Core Times (min:sec): 142.0-143.0' (4:32); 143.0-144.0' (2:50); 144.0-145.0' (2:58); 145.0-146.0' (3:21); 146.0-146.4' (1:50)	
145										
								469.4	146.4	
									Bottom of Exploration at 146.4 feet below ground surface.	
150										

Remarks:

1. As-drilled coordinates of test borings determined by MaineDOT and provided to Haley & Aldrich in NAD 83 Maine 2000 West Zone Coordinate System. As-drilled coordinates related to station and offset information by TranSystems.
2. DS-1 = direct shear test no.; FA = friction angle; c = cohesion; psf = pounds per square foot.

Stratification lines represent approximate boundaries between soil types; transitions may be gradual.

* Water level readings have been made at times and under conditions stated. Groundwater fluctuations may occur due to conditions other than those present at the time measurements were made.

Boring No.: BB-RAR-110

HALEY & ALDRICH

STATE OF MAINE
DEPARTMENT OF TRANSPORTATION

BH-1510(500)X

WIN 15105.00

BRIDGE PLANS

BRIDGE NO. 3248

STATE OF MAINE — WAYNE A. CHADBOURNE — No. 10620 — PROFESSIONAL ENGINEER

PROJ. MANAGER	S. BODGE		
DESIGN-DETAILED	B. STEINERT	B. STEINERT	02/2013
CHECKED-REVIEWED	W. CHADBOURNE	W. CHADBOURNE	02/2013
DESIGN2-DETAILED2			
DESIGN3-DETAILED3			
REVISIONS: 1			
REVISIONS: 2			
REVISIONS: 3			
REVISIONS: 4			
FIELD CHANGES			

SIGNATURE
10620
P.E. NUMBER
5/29/2013
DATE

MARTIN MEMORIAL BRIDGE
ANDROSCOGGIN RIVER
RUMFORD OXFORD COUNTY

BORING LOGS

SHEET NUMBER
51
OF 95

Filename: ...\0030\Road\052_BoringLogs.dgn Division: BRIDGE Username: T SANDELL Date:5/29/2013

Maine Department of Transportation
Soil/Rock Exploration Log
US CUSTOMARY UNITS

Project: Martin Memorial Bridge Replacement
Location: Route 232 - Rumford, Maine
Boring No.: BB-RAR-111
PIN: 15105.00

Driller:	Maine Test Borings	**Elevation (ft.)**	615.7	**Auger ID/OD:**	--
Operator:	B. Enos	**Datum:**	NAVD 88	**Sampler:**	Split Spoon-1.375 in. ID
Logged By:	B. Steinert	**Rig Type:**	CME 45 Skid on Trailer	**Hammer Wt./Fall:**	HW/NW-300/16; S-140/30
Date Start/Finish:	07-12-2012/07-13-2012	**Drilling Method:**	HW/NW Drive	**Core Barrel:**	NQ-2.0 in. ID
Boring Location:	Sta. 15+30, 24.4' Rt.	**Casing ID/OD:**	HW-4.0 in. ID/NW-3.0 in. ID	**Water Level**:**	NE
Hammer Efficiency Factor: 0.6		**Hammer Type:**	Automatic☐ Hydraulic☐ Rope & Cathead☒		

Definitions:
D = Split Spoon Sample
MD = Unsuccessful Split Spoon Sample attempt
U = Thin Wall Tube Sample
MU = Unsuccessful Thin Wall Tube Sample attempt
V = Insitu Vane Shear Test
MV = Unsuccessful Insitu Vane Shear Test attempt
R = Rock Core Sample
SSA = Solid Stem Auger
HSA = Hollow Stem Auger
RC = Roller Cone
WOH = weight of 140lb. hammer
WOR = weight of rods
WO1P = Weight of one person
S=u=(~t~a~b~) = Insitu Field Vane Shear Strength (psf)
T=v = Pocket Torvane Shear Strength (psf)
q=p = Unconfined Compressive Strength (ksf)
N-uncorrected = Raw field SPT N-value
Hammer Efficiency Factor = Annual Calibration Value
N=6-0 = SPT N-uncorrected corrected for hammer efficiency
N=6-0 = (Hammer Efficiency Factor/60%)*N-uncorrected
S=u=(~f~a~b~) = Lab Vane Shear Strength (psf)
WC = water content, percent
LL = Liquid Limit
PL = Plastic Limit
PI = Plasticity Index
G = Grain Size Analysis
C = Consolidation Test

Sample Information

Depth (ft.)	Sample No.	Pen./Rec. (in.)	Sample Depth (ft.)	Blows (6 in.) Shear Strength (psf) or RQD (%)	N-uncorrected	N=6-0	Casing Blows	Elevation (ft.)	Graphic Log	Visual Description and Remarks	Laboratory Testing Results/ AASHTO and Unified Class.
0	1D	24/18	0.0 - 2.0	2/2/2/1	4	4	7			Dark brown and tan, dry to moist, very loose, silty fine SAND with organics (rootlets) throughout -TOPSOIL-(SM)	
							9				
							8	612.2		3.5	
							10				
5	2D	24/16	5.0 - 7.0	2/1/1/1	2	2	6			Light brown, moist to wet, very loose, fine SAND, some silt, trace medium sand -ALLUVIAL DEPOSIT-(SM)	G#248313 A-2-4, SM WC=30.9% GTX#12194 DS-2 FA=32.5°o c=264 psf
							6				
							10				
							11				
	3D	24/16	9.0 - 11.0	1/WOH/1/WOH	1	1	7			Light brown with orange, saturated, very loose, fine SAND, some silt, trace medium sand, occasional organics -ALLUVIAL DEPOSIT-(SM)	G#248313 A-2-4, SM WC=30.9% GTX#12194 DS-2 FA=32.5°o c=264 psf
10							10				
							12				
							18			Note: Mix drilling mud prior washing ahead to 14 ft.	
							22				
	4D	24/18	14.0 - 16.0	1/1/1/1	2	2	11			Gray-brown and tan, saturated, very loose, fine to medium SAND, trace silt, frequent dark brown organics, bottom 3 in. of recovered sample predominantly dark brown organic material, organic odor -ALLUVIAL DEPOSIT-(SP)	
							17				
							22				
							25	598.2		17.5	
							34				
20	5D	24/12	19.0 - 21.0	2/2/3/3	5	5	26			Gray-brown, saturated, loose, fine to medium SAND, trace silt and coarse sand, frequent bands of dark brown organic material, numerous pieces of wood, organic odor -ALLUVIAL DEPOSIT-(SW)	
							28				
							36				
							41				
							61				
25	MD	24/0	24.0 - 26.0	7/8/4/5	12	12	34			No Recovery, 1.5 in. cobble and wood fragments stuck in tip of spoon, wash suggests similar material to above with more coarse sand and gravel, blow counts likely not representative of actual soil conditions	
							41				
							46				
							59			Note: Frequent gravel/cobble layers observed between approximately 24 and 29 ft based on drill action.	
							62				
	6D	24/10	29.0 - 31.0	7/6/5/7	11	11	45			Gray-brown, saturated, medium dense, medium to coarse SAND, trace silt, fine sand and gravel, occasional wood fibers -ALLUVIAL DEPOSIT-(SW)	
30							64				
							91				
							115	584.7		31.0	
							115				
35	7D	24/12	34.0 - 36.0	6/6/5/7	11	11	OPEN			Gray-brown to red-brown, saturated, medium dense, medium to coarse SAND with layers of fine sand, trace silt -ALLUVIAL DEPOSIT-(SW)	
	8D	24/12	39.0 - 41.0	6/8/7/10	15	15				Gray-brown to red-brown, saturated, medium dense, medium to coarse SAND with layers of fine sand, trace silt -ALLUVIAL DEPOSIT-(SW)	
40											
	9D	24/11	44.0 - 46.0	9/11/8/9	19	19				Gray-brown to red-brown, saturated, medium dense, medium to coarse SAND with layers of fine sand, trace silt -ALLUVIAL DEPOSIT-(SW)	
45											
	10D	24/10	49.0 - 51.0	5/7/7/7	14	14				Gray-brown to red-brown, saturated, medium dense, medium to coarse SAND with layers of fine sand, trace silt	
50											

Remarks:
1. As-drilled coordinates of test borings determined by MaineDOT and provided to Haley & Aldrich in NAD 83 Maine 2000 West Zone Coordinate System. As-drilled coordinates related to station and offset information by TranSystems.
2. DS-1 = direct shear test no.; FA = friction angle; c = cohesion; psf = pounds per square foot.

Stratification lines represent approximate boundaries between soil types; transitions may be gradual.

* Water level readings have been made at times and under conditions stated. Groundwater fluctuations may occur due to conditions other than those present at the time measurements were made.

Maine Department of Transportation
Soil/Rock Exploration Log
US CUSTOMARY UNITS

Project: Martin Memorial Bridge Replacement
Location: Route 232 - Rumford, Maine
Boring No.: BB-RAR-111
PIN: 15105.00

Driller:	Maine Test Borings	**Elevation (ft.)**	615.7	**Auger ID/OD:**	--
Operator:	B. Enos	**Datum:**	NAVD 88	**Sampler:**	Split Spoon-1.375 in. ID
Logged By:	B. Steinert	**Rig Type:**	CME 45 Skid on Trailer	**Hammer Wt./Fall:**	HW/NW-300/16; S-140/30
Date Start/Finish:	07-12-2012/07-13-2012	**Drilling Method:**	HW/NW Drive	**Core Barrel:**	NQ-2.0 in. ID
Boring Location:	Sta. 15+30, 24.4' Rt.	**Casing ID/OD:**	HW-4.0 in. ID/NW-3.0 in. ID	**Water Level**:**	NE
Hammer Efficiency Factor: 0.6		**Hammer Type:**	Automatic☐ Hydraulic☐ Rope & Cathead☒		

Definitions:
D = Split Spoon Sample
MD = Unsuccessful Split Spoon Sample attempt
U = Thin Wall Tube Sample
MU = Unsuccessful Thin Wall Tube Sample attempt
V = Insitu Vane Shear Test
MV = Unsuccessful Insitu Vane Shear Test attempt
R = Rock Core Sample
SSA = Solid Stem Auger
HSA = Hollow Stem Auger
RC = Roller Cone
WOH = weight of 140lb. hammer
WOR = weight of rods
WO1P = Weight of one person
S=u=(~t~a~b~) = Insitu Field Vane Shear Strength (psf)
T=v = Pocket Torvane Shear Strength (psf)
q=p = Unconfined Compressive Strength (ksf)
N-uncorrected = Raw field SPT N-value
Hammer Efficiency Factor = Annual Calibration Value
N=6-0 = SPT N-uncorrected corrected for hammer efficiency
N=6-0 = (Hammer Efficiency Factor/60%)*N-uncorrected
S=u=(~f~a~b~) = Lab Vane Shear Strength (psf)
WC = water content, percent
LL = Liquid Limit
PL = Plastic Limit
PI = Plasticity Index
G = Grain Size Analysis
C = Consolidation Test

Sample Information

Depth (ft.)	Sample No.	Pen./Rec. (in.)	Sample Depth (ft.)	Blows (6 in.) Shear Strength (psf) or RQD (%)	N-uncorrected	N=6-0	Casing Blows	Elevation (ft.)	Graphic Log	Visual Description and Remarks	Laboratory Testing Results/ AASHTO and Unified Class.
50							OPEN			-ALLUVIAL DEPOSIT-(SW)	
55	11D	24/8	54.0 - 56.0	7/8/8/10	16	16				Gray-brown to red-brown, saturated, medium dense, medium to coarse SAND with layers of fine sand, trace silt -ALLUVIAL DEPOSIT-(SW)	
60	12D	24/10	59.0 - 61.0	5/8/9/9	17	17				Gray-brown to red-brown, saturated, medium dense, medium to coarse SAND with layers of fine sand, trace silt -ALLUVIAL DEPOSIT-(SW)	
65	13D	24/12	64.0 - 66.0	6/6/7/7	13	13				Gray-brown to red-brown, saturated, medium dense, medium to coarse SAND with layers of fine sand, trace silt -ALLUVIAL DEPOSIT-(SW)	
70	14D	24/10	69.0 - 71.0	6/7/7/7	14	14				Gray-brown to red-brown, saturated, medium dense, medium to coarse SAND with layers of fine sand, trace silt -ALLUVIAL DEPOSIT-(SW)	
75	15D	24/20	74.0 - 76.0	6/7/6/6	13	13				Gray-brown to red-brown, saturated, medium dense, fine to medium SAND, trace silt, coarse sand and fine gravel -ALLUVIAL DEPOSIT-(SP)	G#248314 A-3, SP WC=20.6% GTX#12194 DS-3 FA=35.0°o c=534 psf
							OPEN				
80	16D	24/12	79.0 - 81.0	5/3/4/5	7	7				Gray-brown to red-brown, saturated, loose, fine to medium SAND, trace silt, coarse sand and fine gravel -ALLUVIAL DEPOSIT-(SP)	G#248314 A-3, SP WC=20.6% GTX#12194 DS-3 FA=35.0°o c=534 psf
85	17D	24/15	85.0 - 87.0	9/7/9/11	16	16				Gray-brown to red-brown, saturated, medium dense, medium to coarse SAND, trace silt, fine sand and gravel, weakly stratified with alternating layers of medium and coarse sand -ALLUVIAL DEPOSIT-(SW)	
								527.2		88.5	
90	18D	24/16	90.0 - 92.0	11/11/10/12	21	21				Orange-brown, saturated, medium dense, gravelly medium to coarse SAND, trace fine sand -ALLUVIAL DEPOSIT-(SW)	
95	19D	24/13	95.0 - 97.0	8/7/9/9	16	16				Orange-brown to gray-brown, saturated, medium dense, fine to coarse SAND, trace silt, little fine gravel -ALLUVIAL DEPOSIT-(SP)	G#248315 A-1-b, SP WC=10.5% GTX#12194 DS-4 FA=38.1°o c=211 psf
100											

Remarks:
1. As-drilled coordinates of test borings determined by MaineDOT and provided to Haley & Aldrich in NAD 83 Maine 2000 West Zone Coordinate System. As-drilled coordinates related to station and offset information by TranSystems.
2. DS-1 = direct shear test no.; FA = friction angle; c = cohesion; psf = pounds per square foot.

Stratification lines represent approximate boundaries between soil types; transitions may be gradual.

* Water level readings have been made at times and under conditions stated. Groundwater fluctuations may occur due to conditions other than those present at the time measurements were made.

Maine Department of Transportation
Soil/Rock Exploration Log
US CUSTOMARY UNITS

Project: Martin Memorial Bridge Replacement
Location: Route 232 - Rumford, Maine
Boring No.: BB-RAR-111
PIN: 15105.00

Driller:	Maine Test Borings	**Elevation (ft.)**	615.7	**Auger ID/OD:**	--
Operator:	B. Enos	**Datum:**	NAVD 88	**Sampler:**	Split Spoon-1.375 in. ID
Logged By:	B. Steinert	**Rig Type:**	CME 45 Skid on Trailer	**Hammer Wt./Fall:**	HW/NW-300/16; S-140/30
Date Start/Finish:	07-12-2012/07-13-2012	**Drilling Method:**	HW/NW Drive	**Core Barrel:**	NQ-2.0 in. ID
Boring Location:	Sta. 15+30, 24.4' Rt.	**Casing ID/OD:**	HW-4.0 in. ID/NW-3.0 in. ID	**Water Level**:**	NE
Hammer Efficiency Factor: 0.6		**Hammer Type:**	Automatic☐ Hydraulic☐ Rope & Cathead☒		

Definitions:
D = Split Spoon Sample
MD = Unsuccessful Split Spoon Sample attempt
U = Thin Wall Tube Sample
MU = Unsuccessful Thin Wall Tube Sample attempt
V = Insitu Vane Shear Test
MV = Unsuccessful Insitu Vane Shear Test attempt
R = Rock Core Sample
SSA = Solid Stem Auger
HSA = Hollow Stem Auger
RC = Roller Cone
WOH = weight of 140lb. hammer
WOR = weight of rods
WO1P = Weight of one person
S=u=(~t~a~b~) = Insitu Field Vane Shear Strength (psf)
T=v = Pocket Torvane Shear Strength (psf)
q=p = Unconfined Compressive Strength (ksf)
N-uncorrected = Raw field SPT N-value
Hammer Efficiency Factor = Annual Calibration Value
N=6-0 = SPT N-uncorrected corrected for hammer efficiency
N=6-0 = (Hammer Efficiency Factor/60%)*N-uncorrected
S=u=(~f~a~b~) = Lab Vane Shear Strength (psf)
WC = water content, percent
LL = Liquid Limit
PL = Plastic Limit
PI = Plasticity Index
G = Grain Size Analysis
C = Consolidation Test

Sample Information

Depth (ft.)	Sample No.	Pen./Rec. (in.)	Sample Depth (ft.)	Blows (6 in.) Shear Strength (psf) or RQD (%)	N-uncorrected	N=6-0	Casing Blows	Elevation (ft.)	Graphic Log	Visual Description and Remarks	Laboratory Testing Results/ AASHTO and Unified Class.
100	20D	24/12	100.0 - ~~102.0~~	8/10/11/14	21	21	OPEN			Orange-brown to gray-brown, saturated, medium dense, fine to coarse SAND, trace silt, little fine gravel -ALLUVIAL DEPOSIT-(SP)	G#248315 A-1-b, SP WC=10.5% GTX#12194 DS-4 FA=38.1°o c=211 psf
105											
110										Note: Increased drilling resistance at approximately 109 ft.	
	21D	24/13	110.0 - ~~112.0~~	11/13/13/12	26	26	19			Orange-brown to gray-brown, saturated, medium dense, fine to coarse SAND, trace silt, trace gravel -ALLUVIAL DEPOSIT-(SW)	
							29				
							32			Note: Advance NW casing from 34 ft to approximately 119 ft after 22D.	
							35				
115							44				
							45				
							55				
							61				
							56				
120	22D	24/14	119.0 - ~~121.0~~	7/9/13/20	22	22	36	495.7		120.0 Gray-brown, saturated, medium dense, fine SAND, trace silt -ALLUVIAL DEPOSIT-(SW)	
							37				
							111				
							108				
							112				
							155	491.7		124.0	
125							233				
							200			-PROBABLE GLACIAL TILL-	
							205			Note: Geologic interpretation based on conditions encountered in testing boring BB-RAR-110 and observed casing blows.	
							192				
130	23D		129.5 - ~~130.5~~	24/56	80	80	116 864.1.0%				
	R1	60/49	130.8 - ~~135.8~~	RQD = 82%				485.2		130.5 Top of Bedrock at El. 485.2 Light to gray, medium grained SCHIST. Moderately hard, fresh to slightly weathered. Joints moderate to steeply dipping, close, open.	
								483.5		-LITTLETON FORMATION- 132.2	
										Light gray to greenish-gray, coarse grained quartz PEGMATITE. Hard, fresh to slightly weathered. Joints dipping at low to moderate angles, moderately close, open, discolored. Rock Mass Quality=Good Recovery=100% R1 Core Times (min:sec): 130.8-131.8' (3:09); 131.8-132.8' (2:47); 132.8-133.8' (2:32); 133.8-134.8' (2:41); 134.8-135.8' (2:57)	
135											
	R2	60/55	135.8 - ~~140.8~~	RQD = 92%						Light gray to green-gray, coarse grained quartz PEGMATITE. Hard, fresh to slightly weathered. Joints dipping at low to moderate angles, close to moderately close, open, discolored. Rock Mass Quality=Good Recovery=100% R2 Core Times (min:sec): 135.8-136.8' (2:20); 136.8-137.8' (1:47); 137.8-138.8' (2:18); 138.8-139.8' (2:26); 139.8-140.8' (2:36)	
140								474.9		140.8 Bottom of Exploration at 140.8 feet below ground surface.	
145											
150											

Remarks:
1. As-drilled coordinates of test borings determined by MaineDOT and provided to Haley & Aldrich in NAD 83 Maine 2000 West Zone Coordinate System. As-drilled coordinates related to station and offset information by TranSystems.
2. DS-1 = direct shear test no.; FA = friction angle; c = cohesion; psf = pounds per square foot.

Stratification lines represent approximate boundaries between soil types; transitions may be gradual.

* Water level readings have been made at times and under conditions stated. Groundwater fluctuations may occur due to conditions other than those present at the time measurements were made.

HALEY & ALDRICH

STATE OF MAINE
DEPARTMENT OF TRANSPORTATION

BH-1510(500)X

WIN 15105.00

BRIDGE PLANS

BRIDGE NO. 3248

STATE OF MAINE WAYNE A. CHADBOURNE No. 10620 PROFESSIONAL ENGINEER

SIGNATURE		
10620	P.E. NUMBER	
5/29/2013	DATE	

PROJ. MANAGER	S. BODGE	BY	DATE
DESIGN-DETAILED	B. STEINERT	B. STEINERT	02/2013
CHECKED-REVIEWED	W. CHADBOURNE	W. CHADBOURNE	02/2013
DESIGN2-DETAILED2			
DESIGN3-DETAILED3			
REVISIONS 1			
REVISIONS 2			
REVISIONS 3			
REVISIONS 4			
FIELD CHANGES			

MARTIN MEMORIAL BRIDGE
ANDROSCOGGIN RIVER
RUMFORD OXFORD COUNTY

BORING LOGS

SHEET NUMBER
52
OF 95

Filename: ...\0030\Road\053_BoringLogs.dgn Division: BRIDGE Username: T SANDELL Date:5/29/2013

Maine Department of Transportation
Soil/Rock Exploration Log
US CUSTOMARY UNITS

Project: Martin Memorial Bridge Replacement
Location: Route 232 - Rumford, Maine
Boring No.: BB-RAR-112
PIN: 15105.00

Driller:	Maine Test Borings	**Elevation (ft.)**	615.4	**Auger ID/OD:**	--
Operator:	B. Enos	**Datum:**	NAVD 88	**Sampler:**	Split Spoon-1.375 in. ID
Logged By:	M. Snow	**Rig Type:**	CME 45 Skid on Trailer	**Hammer Wt./Fall:**	NW-300/24; S-140/30
Date Start/Finish:	06-12-2012/06-12-2012	**Drilling Method:**	NW Drive	**Core Barrel:**	--
Boring Location:	Sta. 15+27, 78.2' Lt.	**Casing ID/OD:**	NW-3.0 in. ID	**Water Level *:**	8.0
Hammer Efficiency Factor:	0.6	**Hammer Type:**	Automatic☐ Hydraulic☐ Rope & Cathead☒		

Definitions:
D = Split Spoon Sample
MD = Unsuccessful Split Spoon Sample attempt
U = Thin Wall Tube Sample
MU = Unsuccessful Thin Wall Tube Sample attempt
V = Insitu Vane Shear Test
MV = Unsuccessful Insitu Vane Shear Test attempt
R = Rock Core Sample
SSA = Solid Stem Auger
HSA = Hollow Stem Auger
RC = Roller Cone
WOH = weight of 140lb. hammer
WOR = weight of rods
WO1P = Weight of one person
S-u = Insitu Field Vane Shear Strength (psf)
T-v = Pocket Torvane Shear Strength (psf)
q-p = Unconfined Compressive Strength (ksf)
N-uncorrected = Raw field SPT N-value
Hammer Efficiency Factor = Annual Calibration Value
N-6-0 = SPT N-uncorrected corrected for hammer efficiency
N-60 = (Hammer Efficiency Factor/60%)*N-uncorrected
S-u-(-I-a-b-) = Lab Vane Shear Strength (psf)
WC = water content, percent
LL = Liquid Limit
PL = Plastic Limit
PI = Plasticity Index
G = Grain Size Analysis
C = Consolidation Test

Sample Information

Depth (ft.)	Sample No.	Pen./Rec. (in.)	Sample Depth (ft.)	Blows (/6 in.) Shear Strength (psf) or RQD (%)	N-uncorrected	N-60	Casing Blows	Elevation (ft.)	Graphic Log	Visual Description and Remarks	Laboratory Testing Results/ AASHTO and Unified Class.
0	1D	24/18	0.0 - 2.0	1/2/1/2	3	3	NW Push			Dark brown, moist, soft, fine sandy SILT, roots -TOPSOIL-(ML)	
								613.4		2.0	
	2D	24/18	2.0 - 4.0	1/WOH/2/1	2	2				Dark brown, moist, soft, silty fine SAND, rootlets -TOPSOIL-(SM)	
								611.9		3.5	
5	3D	24/18	4.0 - 6.0	1/1/1/1	2	2	4			Brown, moist, very loose, fine SAND, little silt -ALLUVIAL DEPOSIT-(SP-SM)	
							6				
	4D	24/18	6.0 - 8.0	1/WOH/WOH/1	0	0	4			Brown, wet, very loose, fine SAND, little silt -ALLUVIAL DEPOSIT-(SP-SM)	
							4				
	5D	24/22	8.0 - 10.0	2/1/1/WOH	2	2	5			Brown, wet, very loose, fine SAND, little silt -ALLUVIAL DEPOSIT-(SP-SM)	
							5				
10							10				
							10				
							9				
							8				
								601.4		14.0	
	6D	24/18	14.0 - 16.0	1/1/3/1	4	4	12			Gray, wet, very loose, fine SAND, trace silt, contains organics, organic odor -ALLUVIAL DEPOSIT-(SP-SM)	
15							12				
							9				
							14				
							16				
	7D	24/16	19.0 - 21.0	2/2/4/3	6	6	11			Gray, wet, loose, fine SAND, little medium sand, organic odor -ALLUVIAL DEPOSIT-(SP)	
20							11				
							15				
							26				
							28				
25	8D	24/20	24.0 - 26.0	2/2/5/7	7	7	13			Gray, wet, loose, fine to medium SAND, trace coarse sand and silt, little fine gravel, stratified -ALLUVIAL DEPOSIT-(SP)	G#248316 A-1-b, SP WC=16.4% GTX#12194 DS-5 FA=41.5°o c=188 psf
							16				
							22				
							33				
							38				
30	9D	24/12	29.0 - 31.0	7/5/9/10	14	14	21			Gray-brown, wet, medium dense, fine to medium SAND, trace coarse sand and silt, little fine gravel -ALLUVIAL DEPOSIT-(SP)	G#248316 A-1-b, SP WC=16.4% GTX#12194 DS-5 FA=41.5°o c=188 psf
							20				
							37				
							41				
							41				
								581.4		34.0	
35	10D	24/14	34.0 - 36.0	2/4/5/7	9	9	19			Brown, wet, loose, fine to medium SAND, little coarse sand, occasional stratification -ALLUVIAL DEPOSIT-(SP)	
							16				
							32				
							36				
							41				
40	11D	24/16	39.0 - 41.0	4/7/9/10	16	16	25			Brown, wet, medium dense, fine to medium SAND, trace coarse sand, trace silt -ALLUVIAL DEPOSIT-(SP)	
							28				
							47				
							57				
							65				
45	12D	24/20	44.0 - 46.0	5/11/11/13	22	22	47			Brown, wet, medium dense, fine to medium SAND, little coarse sand, stratified -ALLUVIAL DEPOSIT-(SW)	
							43				
							57				
							69				
							68				
50	13D	24/12	49.0 - 51.0	3/3/5/8	8	8				Brown, wet, loose, fine to medium SAND, little coarse sand, occasional stratification	

Remarks:
1. As-drilled coordinates of test borings determined by MaineDOT and provided to Haley & Aldrich in NAD 83 Maine 2000 West Zone Coordinate System. As-drilled coordinates related to station and offset information by TranSystems.
2. DS-1 = direct shear test no.; FA = friction angle; c = cohesion; psf = pounds per square foot.

Stratification lines represent approximate boundaries between soil types; transitions may be gradual.

* Water level readings have been made at times and under conditions stated. Groundwater fluctuations may occur due to conditions other than those present at the time measurements were made.

Page 2 of 3
Boring No.: BB-RAR-112

Maine Department of Transportation
Soil/Rock Exploration Log
US CUSTOMARY UNITS

Project: Martin Memorial Bridge Replacement
Location: Route 232 - Rumford, Maine
Boring No.: BB-RAR-112
PIN: 15105.00

Driller:	Maine Test Borings	**Elevation (ft.)**	615.4	**Auger ID/OD:**	--
Operator:	B. Enos	**Datum:**	NAVD 88	**Sampler:**	Split Spoon-1.375 in. ID
Logged By:	M. Snow	**Rig Type:**	CME 45 Skid on Trailer	**Hammer Wt./Fall:**	NW-300/24; S-140/30
Date Start/Finish:	06-12-2012/06-12-2012	**Drilling Method:**	NW Drive	**Core Barrel:**	--
Boring Location:	Sta. 15+27, 78.2' Lt.	**Casing ID/OD:**	NW-3.0 in. ID	**Water Level *:**	8.0
Hammer Efficiency Factor:	0.6	**Hammer Type:**	Automatic☐ Hydraulic☐ Rope & Cathead☒		

Definitions:
D = Split Spoon Sample
MD = Unsuccessful Split Spoon Sample attempt
U = Thin Wall Tube Sample
MU = Unsuccessful Thin Wall Tube Sample attempt
V = Insitu Vane Shear Test
MV = Unsuccessful Insitu Vane Shear Test attempt
R = Rock Core Sample
SSA = Solid Stem Auger
HSA = Hollow Stem Auger
RC = Roller Cone
WOH = weight of 140lb. hammer
WOR = weight of rods
WO1P = Weight of one person
S-u = Insitu Field Vane Shear Strength (psf)
T-v = Pocket Torvane Shear Strength (psf)
q-p = Unconfined Compressive Strength (ksf)
N-uncorrected = Raw field SPT N-value
Hammer Efficiency Factor = Annual Calibration Value
N-6-0 = SPT N-uncorrected corrected for hammer efficiency
N-60 = (Hammer Efficiency Factor/60%)*N-uncorrected
S-u-(-I-a-b-) = Lab Vane Shear Strength (psf)
WC = water content, percent
LL = Liquid Limit
PL = Plastic Limit
PI = Plasticity Index
G = Grain Size Analysis
C = Consolidation Test

Sample Information

Depth (ft.)	Sample No.	Pen./Rec. (in.)	Sample Depth (ft.)	Blows (/6 in.) Shear Strength (psf) or RQD (%)	N-uncorrected	N-60	Casing Blows	Elevation (ft.)	Graphic Log	Visual Description and Remarks	Laboratory Testing Results/ AASHTO and Unified Class.
50								564.4		-ALLUVIAL DEPOSIT-(SW)	
										51.0 Bottom of Exploration at 51.0 feet below ground surface.	
55											
60											
65											
70											
75											

Remarks:
1. As-drilled coordinates of test borings determined by MaineDOT and provided to Haley & Aldrich in NAD 83 Maine 2000 West Zone Coordinate System. As-drilled coordinates related to station and offset information by TranSystems.
2. DS-1 = direct shear test no.; FA = friction angle; c = cohesion; psf = pounds per square foot.

Stratification lines represent approximate boundaries between soil types; transitions may be gradual.

* Water level readings have been made at times and under conditions stated. Groundwater fluctuations may occur due to conditions other than those present at the time measurements were made.

Page 3 of 3
Boring No.: BB-RAR-112

Maine Department of Transportation
Soil/Rock Exploration Log
US CUSTOMARY UNITS

Project: Martin Memorial Bridge Replacement
Location: Route 232 - Rumford, Maine
Boring No.: BB-RAR-113
PIN: 15105.00

Driller:	Maine Test Borings	**Elevation (ft.)**	615.8	**Auger ID/OD:**	--
Operator:	B. Enos	**Datum:**	NAVD 88	**Sampler:**	Split Spoon-1.375 in. ID
Logged By:	B. Babcock	**Rig Type:**	CME 45 Skid on Trailer	**Hammer Wt./Fall:**	NW-300/16; S-140/30
Date Start/Finish:	06-11-2012/06-11-2012	**Drilling Method:**	NW Drive	**Core Barrel:**	--
Boring Location:	Sta. 15+22, 78.8' Rt.	**Casing ID/OD:**	NW-3.0 in. ID	**Water Level *:**	8.0
Hammer Efficiency Factor:	0.6	**Hammer Type:**	Automatic☐ Hydraulic☐ Rope & Cathead☒		

Definitions:
D = Split Spoon Sample
MD = Unsuccessful Split Spoon Sample attempt
U = Thin Wall Tube Sample
MU = Unsuccessful Thin Wall Tube Sample attempt
V = Insitu Vane Shear Test
MV = Unsuccessful Insitu Vane Shear Test attempt
R = Rock Core Sample
SSA = Solid Stem Auger
HSA = Hollow Stem Auger
RC = Roller Cone
WOH = weight of 140lb. hammer
WOR = weight of rods
WO1P = Weight of one person
S-u = Insitu Field Vane Shear Strength (psf)
T-v = Pocket Torvane Shear Strength (psf)
q-p = Unconfined Compressive Strength (ksf)
N-uncorrected = Raw field SPT N-value
Hammer Efficiency Factor = Annual Calibration Value
N-6-0 = SPT N-uncorrected corrected for hammer efficiency
N-60 = (Hammer Efficiency Factor/60%)*N-uncorrected
S-u-(-I-a-b-) = Lab Vane Shear Strength (psf)
WC = water content, percent
LL = Liquid Limit
PL = Plastic Limit
PI = Plasticity Index
G = Grain Size Analysis
C = Consolidation Test

Sample Information

Depth (ft.)	Sample No.	Pen./Rec. (in.)	Sample Depth (ft.)	Blows (/6 in.) Shear Strength (psf) or RQD (%)	N-uncorrected	N-60	Casing Blows	Elevation (ft.)	Graphic Log	Visual Description and Remarks	Laboratory Testing Results/ AASHTO and Unified Class.
0	1D	24/20	0.0 - 2.0	1/2/2/2	4	4	NW Push			Dark brown to brown, moist to dry, very loose, fine SAND, some silt, roots in top 6 in. -TOPSOIL-(SM)	
								613.8		2.0	
	2D	24/14	2.0 - 4.0	1/1/WOH/1	1	1				Light brown, dry, very loose, fine SAND, little silt -ALLUVIAL DEPOSIT-(SM)	
5	3D	24/16	4.0 - 6.0	1/1/WOH/1	1	1	3			Light brown, moist, very loose, fine SAND, trace silt -ALLUVIAL DEPOSIT-(SP-SM)	
							3				
	4D	24/18	6.0 - 8.0	1/WOH/WOH/WOH	0	0	4			Light brown, wet, very loose, fine SAND, some silt, stratified -ALLUVIAL DEPOSIT-(SM)	
							3				
	5D	24/24	8.0 - 10.0	1/WOH/WOH/WOH	0	0	2			Light brown, saturated, very loose, fine SAND, trace silt, trace plant fibers -ALLUVIAL DEPOSIT-(SP-SM)	
10							3				
							9				
							8				
							10				
							11				
15	6D	24/20	14.0 - 16.0	1/WOH/1/1	1	1	9			Gray-brown, saturated, very loose, fine SAND, trace silt, trace medium sand, trace gravel, stratified -ALLUVIAL DEPOSIT-(SP-SM)	
							11				
							11				
							19				
							20				
20	7D	24/20	19.0 - 21.0	1/2/2/2	4	4	14			Gray, saturated, very loose, fine to coarse SAND, trace silt, trace gravel, trace organic soil with plant fibers in very thin seams in top 6 in. of recovery, stratified -ALLUVIAL DEPOSIT-(SW)	
							15				
							16				
							27				
							31				
25	8D	24/18	24.0 - 26.0	2/2/2/5	4	4	13			Gray, saturated, very loose, fine to coarse SAND, trace gravel, stratified	

Remarks:
1. As-drilled coordinates of test borings determined by MaineDOT and provided to Haley & Aldrich in NAD 83 Maine 2000 West Zone Coordinate System. As-drilled coordinates related to station and offset information by TranSystems.
2. DS-1 = direct shear test no.; FA = friction angle; c = cohesion; psf = pounds per square foot.

Stratification lines represent approximate boundaries between soil types; transitions may be gradual.

* Water level readings have been made at times and under conditions stated. Groundwater fluctuations may occur due to conditions other than those present at the time measurements were made.

Page 1 of 3
Boring No.: BB-RAR-113

Maine Department of Transportation
Soil/Rock Exploration Log
US CUSTOMARY UNITS

Project: Martin Memorial Bridge Replacement
Location: Route 232 - Rumford, Maine
Boring No.: BB-RAR-113
PIN: 15105.00

Driller:	Maine Test Borings	**Elevation (ft.)**	615.8	**Auger ID/OD:**	--
Operator:	B. Enos	**Datum:**	NAVD 88	**Sampler:**	Split Spoon-1.375 in. ID
Logged By:	B. Babcock	**Rig Type:**	CME 45 Skid on Trailer	**Hammer Wt./Fall:**	NW-300/16; S-140/30
Date Start/Finish:	06-11-2012/06-11-2012	**Drilling Method:**	NW Drive	**Core Barrel:**	--
Boring Location:	Sta. 15+22, 78.8' Rt.	**Casing ID/OD:**	NW-3.0 in. ID	**Water Level *:**	8.0
Hammer Efficiency Factor:	0.6	**Hammer Type:**	Automatic☐ Hydraulic☐ Rope & Cathead☒		

Definitions:
D = Split Spoon Sample
MD = Unsuccessful Split Spoon Sample attempt
U = Thin Wall Tube Sample
MU = Unsuccessful Thin Wall Tube Sample attempt
V = Insitu Vane Shear Test
MV = Unsuccessful Insitu Vane Shear Test attempt
R = Rock Core Sample
SSA = Solid Stem Auger
HSA = Hollow Stem Auger
RC = Roller Cone
WOH = weight of 140lb. hammer
WOR = weight of rods
WO1P = Weight of one person
S-u = Insitu Field Vane Shear Strength (psf)
T-v = Pocket Torvane Shear Strength (psf)
q-p = Unconfined Compressive Strength (ksf)
N-uncorrected = Raw field SPT N-value
Hammer Efficiency Factor = Annual Calibration Value
N-6-0 = SPT N-uncorrected corrected for hammer efficiency
N-60 = (Hammer Efficiency Factor/60%)*N-uncorrected
S-u-(-I-a-b-) = Lab Vane Shear Strength (psf)
WC = water content, percent
LL = Liquid Limit
PL = Plastic Limit
PI = Plasticity Index
G = Grain Size Analysis
C = Consolidation Test

Sample Information

Depth (ft.)	Sample No.	Pen./Rec. (in.)	Sample Depth (ft.)	Blows (/6 in.) Shear Strength (psf) or RQD (%)	N-uncorrected	N-60	Casing Blows	Elevation (ft.)	Graphic Log	Visual Description and Remarks	Laboratory Testing Results/ AASHTO and Unified Class.
25							15			-ALLUVIAL DEPOSIT-(SW)	
							37				
							40				
							55				
30	9D	24/6	29.0 - 31.0	6/6/6/6	12	12	26			Gray-brown, saturated, medium dense, fine to medium SAND, trace coarse sand, silt and fine gravel, stratified -ALLUVIAL DEPOSIT-(SP)	G#248317 A-3, SP WC=21% GTX#12194 DS-6 FA=35.3°o c=292 psf
							26				
							42				
							45				
							59				
35	10D	24/6	34.0 - 36.0	5/5/6/6	11	11	25			Gray-brown, saturated, medium dense, fine to medium SAND, trace coarse sand, silt and fine gravel, weakly stratified -ALLUVIAL DEPOSIT-(SP)	G#248317 A-3, SP WC=21% GTX#12194 DS-6 FA=35.3°o c=292 psf
							25				
							40				
							49				
							56				
40	11D	24/10	39.0 - 41.0	4/4/6/5	10	10	31			Gray-brown, saturated, loose, fine to coarse SAND, trace gravel, weakly stratified -ALLUVIAL DEPOSIT-(SW)	
							29				
							36				
							47				
							48				
45	12D	24/4	44.0 - 46.0	3/4/5/7	9	9	31			Gray-brown, saturated, loose, fine to coarse SAND -ALLUVIAL DEPOSIT-(SW)	
							34				
							45				
							51				
							83				
50	13D	24/14	49.0 - 51.0	1/5/7/7	12	12				Gray-brown, saturated, fine to coarse SAND, trace gravel, stratified -ALLUVIAL DEPOSIT-	
								564.8		51.0 Bottom of Exploration at 51.0 feet below ground surface.	
60											
65											
70											
75											

Remarks:
1. As-drilled coordinates of test borings determined by MaineDOT and provided to Haley & Aldrich in NAD 83 Maine 2000 West Zone Coordinate System. As-drilled coordinates related to station and offset information by TranSystems.
2. DS-1 = direct shear test no.; FA = friction angle; c = cohesion; psf = pounds per square foot.

Stratification lines represent approximate boundaries between soil types; transitions may be gradual.

* Water level readings have been made at times and under conditions stated. Groundwater fluctuations may occur due to conditions other than those present at the time measurements were made.

Page 3 of 3
Boring No.: BB-RAR-113

HALEY & ALDRICH

STATE OF MAINE
DEPARTMENT OF TRANSPORTATION

BH-1510(500)X

WIN 15105.00

BRIDGE PLANS

BRIDGE NO. 3248

STATE OF MAINE WAYNE A. CHADBOURNE No. 10620 LICENSED PROFESSIONAL ENGINEER

SIGNATURE		
10620	P.E. NUMBER	
5/29/2013	DATE	

PROJ. MANAGER	S. BOGGE		
DESIGN-DETAILED	B. STEINERT	B. STEINERT	02/2013
CHECKED-REVIEWED	W. CHADBOURNE	W. CHADBOURNE	02/2013
DESIGN2-DETAILED2			
DESIGN3-DETAILED3			
REVISIONS 1			
REVISIONS 2			
REVISIONS 3			
REVISIONS 4			
FIELD CHANGES			

MARTIN MEMORIAL BRIDGE
ANDROSCOGGIN RIVER
RUMFORD OXFORD COUNTY

BORING LOGS

SHEET NUMBER
53
OF 95

Filename: ...\0030\Road\054_BoringLogs.dgn Division: BRIDGE Username: T SANDELL Date:5/29/2013

Maine Department of Transportation
Soil/Rock Exploration Log
US CUSTOMARY UNITS

Project: Martin Memorial Bridge Replacement
Location: Route 232 - Rumford, Maine
Boring No.: BB-RAR-114
PIN: 15105.00

Driller:	Maine Test Borings	**Elevation (ft.)**	615.3	**Auger ID/OD:**	--
Operator:	B. Enos	**Datum:**	NAVD 88	**Sampler:**	Split Spoon-1.375 in. ID
Logged By:	B. Babcock	**Rig Type:**	CME 45 Skid on Trailer	**Hammer Wt./Fall:**	NW-300/16; S-140/30
Date Start/Finish:	06-08-2012/06-11-2012	**Drilling Method:**	NW Drive	**Core Barrel:**	--
Boring Location:	Sta. 15+54, 0.7' Rt.	**Casing ID/OD:**	NW-3.0 in. ID	**Water Level **:**	4.2
Hammer Efficiency Factor:	0.6	**Hammer Type:**	Automatic☐ Hydraulic☐ Rope & Cathead☒		

Definitions:
D = Split Spoon Sample
MD = Unsuccessful Split Spoon Sample attempt
U = Thin Wall Tube Sample
MU = Unsuccessful Thin Wall Tube Sample attempt
V = Insitu Vane Shear Test
MV = Unsuccessful Insitu Vane Shear Test attempt
R = Rock Core Sample
SSA = Solid Stem Auger
HSA = Hollow Stem Auger
RC = Roller Cone
WOH = weight of 140lb. hammer
WOR = weight of rods
WO1P = Weight of one person
S=u = Insitu Field Vane Shear Strength (psf)
T=v = Pocket Torvane Shear Strength (psf)
q=p = Unconfined Compressive Strength (ksf)
N-uncorrected = Raw field SPT N-value
Hammer Efficiency Factor = Annual Calibration Value
N=6-0 = SPT N-uncorrected corrected for hammer efficiency
N=6-0 = (Hammer Efficiency Factor/60%)*N-uncorrected
S=u-(-l-a-b-r) = Lab Vane Shear Strength (psf)
WC = water content, percent
LL = Liquid Limit
PL = Plastic Limit
PI = Plasticity Index
G = Grain Size Analysis
C = Consolidation Test

Sample Information

Depth (ft.)	Sample No.	Pen./Rec. (in.)	Sample Depth (ft.)	Blows (/6 in.) Shear Strength (psf) or RQD (%)	N-uncorrected	N=6-0	Casing Blows	Elevation (ft.)	Visual Description and Remarks	Laboratory Testing Results/ AASHTO and Unified Class.
0	1D	24/14	0.0 - 2.0	1/1/2/1	3	3	1		Dark brown to brown, moist, very loose, silty fine SAND, roots in top 6 in. of recovery -TOPSOIL-(SM)	
							1			
	2D	24/18	2.0 - 4.0	1/WOH/1/WOH	1	1	1		Brown to yellow-brown, moist, very soft, fine sandy SILT, occasional very thin seams of black organic soil -TOPSOIL-(ML)	
							3	611.3	4.0'	
	3D	24/24	4.0 - 6.0	1/WOH/WOH/1	0	0	3		Yellow-brown with brown, wet, very loose, fine SAND, trace medium sand, some silt -ALLUVIAL DEPOSIT-(SM)	G#248318 A-2-4, SM WC=36% GTX#12194 DS-7 FA=35.9° o c=154 psf
							4			
	4D	24/20	6.0 - 8.0	WOH/1/WOH/1	1	1	6		Light brown, saturated, very loose, fine SAND, trace medium sand, some silt, trace plant fibers, stratified -ALLUVIAL DEPOSIT-(SM)	
							6	607.3	8.0'	
	5D	24/20	8.0 - 10.0	1/WOH/WOH/WOH	0	0	7		Light brown, saturated, very loose, fine SAND, trace silt, trace medium sand, stratified -ALLUVIAL DEPOSIT-(SP-SM)	G#248318 A-2-4, SM WC=36% GTX#12194 DS-7 FA=35.9° o c=154 psf
10							9			
							6			
							8			
							9			
							9			
	6D	24/24	14.0 - 16.0	1/WOH/1/WOH	1	1	8		Gray, saturated, very loose, fine SAND, little silt, trace wood, plant fibers throughout, frequent very thin seams of brown organic soil, faint organic odor, stratified -ALLUVIAL DEPOSIT-(SM)	
15							11			
							15			
							21			
							29			
	7D	24/18	19.0 - 21.0	2/2/4/5	6	6	13		Gray, saturated, loose, fine to medium SAND, trace gravel, trace coarse sand, stratified with occasional very thin seams of brown organic soil, very faint organic odor -ALLUVIAL DEPOSIT-(SW)	
20							14			
							15			
							37			
							44			
	8D	24/8	24.0 - 26.0	4/2/3/4	5	5	12		Gray, saturated, loose, fine to medium SAND, trace coarse sand -ALLUVIAL DEPOSIT-(SW)	
25							14			
							16			
							34			
							41			
	9D	24/2	29.0 - 31.0	1/2/3/3	5	5	13		Gray-brown, saturated, loose, fine to medium SAND, trace coarse sand -ALLUVIAL DEPOSIT-(SW)	
30							11			
							19			
							34			
							35			
	10D	24/18	34.0 - 36.0	2/2/3/3	5	5	24		Gray-brown, saturated, loose, fine to coarse SAND, trace gravel, stratified -ALLUVIAL DEPOSIT-(SW)	
35							15			
							29			
							37			
							50			
	11D	24/12	39.0 - 41.0	3/3/4/5	7	7	34		Gray-brown, saturated, loose, fine to coarse SAND, trace silt, little gravel, stratified -ALLUVIAL DEPOSIT-(SW)	G#248319 A-1-b, SW WC=16.8% GTX#12194 DS-8 FA=37.0° o c=471 psf
40							27			
							42			
							60			
							74			
	12D	24/18	44.0 - 46.0	3/2/3/3	5	5	50		Gray-brown, saturated, loose, fine to coarse SAND, trace silt, little gravel, weakly stratified -ALLUVIAL DEPOSIT-(SW)	G#248319 A-1-b, SW WC=16.8% GTX#12194 DS-8 FA=37.0° o c=471 psf
45							42			
							47			
							50			
							69			
	13D	24/12	49.0 - 51.0	3/3/5/7	8	8			Gray-brown, saturated, loose, fine to coarse SAND, trace gravel, weakly stratified	
50										

Remarks:
1. As-drilled coordinates of test borings determined by MaineDOT and provided to Haley & Aldrich in NAD 83 Maine 2000 West Zone Coordinate System. As-drilled coordinates related to station and offset information by TranSystems.
2. DS-1 = direct shear test no.; FA = friction angle; c = cohesion; psf = pounds per square foot.

Stratification lines represent approximate boundaries between soil types; transitions may be gradual.

** Water level readings have been made at times and under conditions stated. Groundwater fluctuations may occur due to conditions other than those present at the time measurements were made.

Page 2 of 3

Boring No.: BB-RAR-114

Maine Department of Transportation
Soil/Rock Exploration Log
US CUSTOMARY UNITS

Project: Martin Memorial Bridge Replacement
Location: Route 232 - Rumford, Maine
Boring No.: BB-RAR-114
PIN: 15105.00

Driller:	Maine Test Borings	**Elevation (ft.)**	615.3	**Auger ID/OD:**	--
Operator:	B. Enos	**Datum:**	NAVD 88	**Sampler:**	Split Spoon-1.375 in. ID
Logged By:	B. Babcock	**Rig Type:**	CME 45 Skid on Trailer	**Hammer Wt./Fall:**	NW-300/16; S-140/30
Date Start/Finish:	06-08-2012/06-11-2012	**Drilling Method:**	NW Drive	**Core Barrel:**	--
Boring Location:	Sta. 15+54, 0.7' Rt.	**Casing ID/OD:**	NW-3.0 in. ID	**Water Level **:**	4.2
Hammer Efficiency Factor:	0.6	**Hammer Type:**	Automatic☐ Hydraulic☐ Rope & Cathead☒		

Definitions:
D = Split Spoon Sample
MD = Unsuccessful Split Spoon Sample attempt
U = Thin Wall Tube Sample
MU = Unsuccessful Thin Wall Tube Sample attempt
V = Insitu Vane Shear Test
MV = Unsuccessful Insitu Vane Shear Test attempt
R = Rock Core Sample
SSA = Solid Stem Auger
HSA = Hollow Stem Auger
RC = Roller Cone
WOH = weight of 140lb. hammer
WOR = weight of rods
WO1P = Weight of one person
S=u = Insitu Field Vane Shear Strength (psf)
T=v = Pocket Torvane Shear Strength (psf)
q=p = Unconfined Compressive Strength (ksf)
N-uncorrected = Raw field SPT N-value
Hammer Efficiency Factor = Annual Calibration Value
N=6-0 = SPT N-uncorrected corrected for hammer efficiency
N=6-0 = (Hammer Efficiency Factor/60%)*N-uncorrected
S=u-(-l-a-b-r) = Lab Vane Shear Strength (psf)
WC = water content, percent
LL = Liquid Limit
PL = Plastic Limit
PI = Plasticity Index
G = Grain Size Analysis
C = Consolidation Test

Sample Information

Depth (ft.)	Sample No.	Pen./Rec. (in.)	Sample Depth (ft.)	Blows (/6 in.) Shear Strength (psf) or RQD (%)	N-uncorrected	N=6-0	Casing Blows	Elevation (ft.)	Visual Description and Remarks	Laboratory Testing Results/ AASHTO and Unified Class.
50								564.3	-ALLUVIAL DEPOSIT-(SW)	
									51.0' Bottom of Exploration at 51.0 feet below ground surface.	
55										
60										
65										
70										
75										

Remarks:
1. As-drilled coordinates of test borings determined by MaineDOT and provided to Haley & Aldrich in NAD 83 Maine 2000 West Zone Coordinate System. As-drilled coordinates related to station and offset information by TranSystems.
2. DS-1 = direct shear test no.; FA = friction angle; c = cohesion; psf = pounds per square foot.

Stratification lines represent approximate boundaries between soil types; transitions may be gradual.

** Water level readings have been made at times and under conditions stated. Groundwater fluctuations may occur due to conditions other than those present at the time measurements were made.

Page 3 of 3

Boring No.: BB-RAR-114

HALEY & ALDRICH

STATE OF MAINE
DEPARTMENT OF TRANSPORTATION

BH-1510(500)X

WIN 15105.00

BRIDGE NO. 3248

BRIDGE PLANS

STATE OF MAINE WAYNE A. CHADBOURNE No. 10620 LICENSED PROFESSIONAL ENGINEER

		BY	DATE
PROJ. MANAGER	S. BODGE		
DESIGN-DETAILED	B. STEINERT	B. STEINERT	02/2013
CHECKED-REVIEWED	W. CHADBOURNE	W. CHADBOURNE	02/2013
DESIGN2-DETAILED2			
DESIGN3-DETAILED3			
REVISIONS 1			
REVISIONS 2			
REVISIONS 3			
REVISIONS 4			
FIELD CHANGES			

SIGNATURE

10620
P.E. NUMBER

5/29/2013
DATE

MARTIN MEMORIAL BRIDGE
ANDROSCOGGIN RIVER
RUMFORD OXFORD COUNTY

BORING LOGS

SHEET NUMBER
54
OF 95

Filename: ...\0030\Road\055_BoringLogs.dgn Division: BRIDGE Username: T SANDELL Date:5/29/2013

Maine Department of Transportation
Soil/Rock Exploration Log
US CUSTOMARY UNITS

Project: Martin Memorial Bridge Replacement
Location: Route 232 - Rumford, Maine
Boring No.: BB-RAR-115
PIN: 15105.00

Driller:	Maine Test Borings	**Elevation (ft.)**	597.1	**Auger ID/OD:**	--
Operator:	B. Enos	**Datum:**	NAVD 88	**Sampler:**	Split Spoon-1.375 in. ID
Logged By:	B. Babcock	**Rig Type:**	CME 45 Skid on Spud Barge	**Hammer Wt./Fall:**	HW/NW-300/16; S-140/30
Date Start/Finish:	07-03-2012/07-04-2012	**Drilling Method:**	HW/NW Drive	**Core Barrel:**	NQ-2.0 in. ID
Boring Location:	Sta. 16+76, 24.5' Lt.	**Casing ID/OD:**	HW-4.0 in. ID/NW-3.0 in. ID	**Water Level*:**	Not Measured
Hammer Efficiency Factor: 0.6		**Hammer Type:**	Automatic☐ Hydraulic☐ Rope & Cathead☒		

Definitions:
D = Split Spoon Sample
MD = Unsuccessful Split Spoon Sample attempt
U = Thin Wall Tube Sample
MU = Unsuccessful Thin Wall Tube Sample attempt
V = Insitu Vane Shear Test
MV = Unsuccessful Insitu Vane Shear Test attempt
R = Rock Core Sample
SSA = Solid Stem Auger
HSA = Hollow Stem Auger
RC = Roller Cone
WOH = weight of 140lb. hammer
WOR = weight of rods
WO1P = Weight of one person
S=u=(~1~a~b~) = Insitu Field Vane Shear Strength (psf)
T=v = Pocket Torvane Shear Strength (psf)
q=p = Unconfined Compressive Strength (ksf)
N-uncorrected = Raw field SPT N-value
Hammer Efficiency Factor = Annual Calibration Value
N=6-0 = SPT N-uncorrected corrected for hammer efficiency
N=6-0 = (Hammer Efficiency Factor/60%)*N-uncorrected
S=u=(~4~a~b~) = Lab Vane Shear Strength (psf)
WC = water content, percent
LL = Liquid Limit
PL = Plastic Limit
PI = Plasticity Index
G = Grain Size Analysis
C = Consolidation Test

Sample Information

Depth (ft.)	Sample No.	Pen./Rec. (in.)	Sample Depth (ft.)	Blows (6 in.) Shear Strength (psf) or RQD (%)	N-uncorrected	N=6-0	Casing Blows	Elevation (ft.)	Graphic Log	Visual Description and Remarks	Laboratory Testing Results/ AASHTO and Unified Class.
0	1D*	24/14	0.0 - 2.0	1/5/12/12	17	17	PUSH			Gray-brown, saturated, medium dense, fine to coarse SAND, some fine to coarse gravel, grading from fine to coarse material, trace plant fibers in top 6 in. -ALLUVIAL DEPOSIT-(SW) Note: * indicates 3 in. diameter split spoon, 140 lb hammer used to collect sample.	
							32				
							31				
							36				
5							29				
							42				
	2D*	24/12	6.0 - 8.0	19/11/7/6	18	18	14			Light brown, saturated, medium dense, fine SAND, trace medium and coarse sand, trace silt, stratified -ALLUVIAL DEPOSIT-(SP)	G#248320 A-3, SP
							15				
							20				
							25				
10							41				
	3D	24/10	11.0 - 13.0	1/2/2/2	4	4	16			Light brown, saturated, very loose, fine SAND, trace medium and coarse sand, trace silt -ALLUVIAL DEPOSIT-(SP)	G#248320 A-3, SP
							15				
							19				
							38				
15							73				
	4D	24/1	16.0 - 18.0	1/2/3/4	5	5	25			Light brown, saturated, loose, fine SAND, trace silt, recovery lost while removing spoon from borehole -ALLUVIAL DEPOSIT-(SP)	
							21				
							47				
							90				
20							108				
	5D	24/10	21.0 - 23.0	3/4/5/6	9	9	45			Light brown with gray-brown, saturated, loose, fine SAND, trace coarse sand, little silt, stratified -ALLUVIAL DEPOSIT-(SP-SM) Note: Drilling mud introduced to borehole at 23.0 ft.	G#248321 A-2-4, SP-SM
							45				
							OPEN				
25							OPEN				
	6D	24/18	26.0 - 28.0	4/7/8/8	15	15				Gray-brown to light brown with red-brown, saturated, medium dense, fine SAND, little silt, stratified -ALLUVIAL DEPOSIT-(SM)	
30								566.1		31.0'	
	7D	24/24	31.0 - 33.0	2/3/3/5	6	6				Light brown with red-brown, saturated, loose, silty fine SAND, trace medium sand, stratified -GLACIOLACUSTRINE DEPOSIT-(SM) Note: Drove HW casing to 31.0 ft through open hole following 7D.	G#248322 A-4, SM WC=26.9% GTX#12194 DS-9 FA=35.7 o c=153 psf
35											
	8D	24/20	36.0 - 38.0	4/6/8/11	14	14				Gray-brown with orange-brown, saturated, medium dense, silty fine SAND, trace medium sand, stratified -GLACIOLACUSTRINE DEPOSIT-(SM)	G#248322 A-4, SM WC=26.9% GTX#12194 DS-9 FA=35.7 o c=153 psf
40											
	9D	24/18	41.0 - 43.0	5/6/10/15	16	16				Orange-brown with gray-brown, saturated, medium dense, fine SAND, little silt, stratified, grading to finer material in bottom 6 in. of recovery, very thin layering (<2 mm) -GLACIOLACUSTRINE DEPOSIT-(SM) Note: Drove HW casing to 41.0 ft through open hole following 9D.	
45											
	10D	24/24	46.0 - 48.0	8/11/11/13	22	22				Light brown with gray-brown, saturated, medium dense, fine to medium SAND, stratified -GLACIOLACUSTRINE DEPOSIT-(SP)	
50											

Remarks:
1. As-drilled coordinates of test borings determined by MaineDOT and provided to Haley & Aldrich in NAD 83 Maine 2000 West Zone Coordinate System. As-drilled coordinates related to station and offset information by TranSystems.
2. DS-1 = direct shear test no.; FA = friction angle; c = cohesion; psf = pounds per square foot.

Stratification lines represent approximate boundaries between soil types; transitions may be gradual.
* Water level readings have been made at times and under conditions stated. Groundwater fluctuations may occur due to conditions other than those present at the time measurements were made.

Page 1 of 3
Boring No.: BB-RAR-115

Maine Department of Transportation
Soil/Rock Exploration Log
US CUSTOMARY UNITS

Project: Martin Memorial Bridge Replacement
Location: Route 232 - Rumford, Maine
Boring No.: BB-RAR-115
PIN: 15105.00

Driller:	Maine Test Borings	**Elevation (ft.)**	597.1	**Auger ID/OD:**	--
Operator:	B. Enos	**Datum:**	NAVD 88	**Sampler:**	Split Spoon-1.375 in. ID
Logged By:	B. Babcock	**Rig Type:**	CME 45 Skid on Spud Barge	**Hammer Wt./Fall:**	HW/NW-300/16; S-140/30
Date Start/Finish:	07-03-2012/07-04-2012	**Drilling Method:**	HW/NW Drive	**Core Barrel:**	NQ-2.0 in. ID
Boring Location:	Sta. 16+76, 24.5' Lt.	**Casing ID/OD:**	HW-4.0 in. ID/NW-3.0 in. ID	**Water Level*:**	Not Measured
Hammer Efficiency Factor: 0.6		**Hammer Type:**	Automatic☐ Hydraulic☐ Rope & Cathead☒		

Definitions:
D = Split Spoon Sample
MD = Unsuccessful Split Spoon Sample attempt
U = Thin Wall Tube Sample
MU = Unsuccessful Thin Wall Tube Sample attempt
V = Insitu Vane Shear Test
MV = Unsuccessful Insitu Vane Shear Test attempt
R = Rock Core Sample
SSA = Solid Stem Auger
HSA = Hollow Stem Auger
RC = Roller Cone
WOH = weight of 140lb. hammer
WOR = weight of rods
WO1P = Weight of one person
S=u=(~1~a~b~) = Insitu Field Vane Shear Strength (psf)
T=v = Pocket Torvane Shear Strength (psf)
q=p = Unconfined Compressive Strength (ksf)
N-uncorrected = Raw field SPT N-value
Hammer Efficiency Factor = Annual Calibration Value
N=6-0 = SPT N-uncorrected corrected for hammer efficiency
N=6-0 = (Hammer Efficiency Factor/60%)*N-uncorrected
S=u=(~4~a~b~) = Lab Vane Shear Strength (psf)
WC = water content, percent
LL = Liquid Limit
PL = Plastic Limit
PI = Plasticity Index
G = Grain Size Analysis
C = Consolidation Test

Sample Information

Depth (ft.)	Sample No.	Pen./Rec. (in.)	Sample Depth (ft.)	Blows (6 in.) Shear Strength (psf) or RQD (%)	N-uncorrected	N=6-0	Casing Blows	Elevation (ft.)	Graphic Log	Visual Description and Remarks	Laboratory Testing Results/ AASHTO and Unified Class.
50							OPEN				
	11D	24/20	51.0 - 53.0	16/18/18/16	36	36				Gray-brown with orange-brown, saturated, dense, fine to medium SAND, trace coarse sand and silt, stratified -GLACIOLACUSTRINE DEPOSIT-(SP)	G#248323 A-3, SP
										Note: Drove HW casing to 46.0 ft through open hole following 11D.	
55											
	12D	24/18	56.0 - 58.0	7/9/10/10	19	19				Light brown with gray-brown and red-brown, saturated, medium dense, fine to medium SAND, trace coarse sand and silt, stratified -GLACIOLACUSTRINE DEPOSIT-(SP)	G#248323 A-3, SP
										Note: Drove HW casing to 51.0 ft through open hole following 12D.	
60											
	13D	24/18	61.0 - 63.0	10/9/12/14	21	21				Gray-brown with orange-brown, saturated, medium dense, fine to medium SAND, trace silt -GLACIOLACUSTRINE DEPOSIT-(SP)	
										Note: Drove HW casing to 56.0 ft through open hole following 13D.	
65											
	14D	24/18	66.0 - 68.0	12/10/11/13	21	21				Light brown, saturated, medium dense, fine to medium SAND, stratified -GLACIOLACUSTRINE DEPOSIT-(SP)	
										Note: Drove HW casing to 66.0 ft through open hole following 14D.	
70											
	15D	24/18	71.0 - 73.0	12/11/14/17	25	25				Light brown, saturated, medium dense, fine to medium SAND, trace silt, stratified -GLACIOLACUSTRINE DEPOSIT-(SP)	
75							OPEN				
	16D	24/16	76.0 - 78.0	8/8/12/15	20	20				Gray-brown with red-brown and orange-brown, saturated, medium dense, fine to medium SAND, little silt, stratified -GLACIOLACUSTRINE DEPOSIT-(SP)	G#248324 A-2-4, SP
80											
	17D	24/16	81.0 - 83.0	10/12/17/16	29	29				Light gray-brown with orange-brown, saturated, medium dense, fine to medium SAND, little silt, stratified -GLACIOLACUSTRINE DEPOSIT-(SP)	G#248324 A-2-4, SP
85											
	18D	24/18	86.0 - 88.0	18/24/22/21	46	46				Light brown, saturated, dense, fine SAND, little silt, trace medium sand, stratified -GLACIOLACUSTRINE DEPOSIT-(SM)	G#248325 A-2-4, SM
90											
	19D	24/14	91.0 - 93.0	19/26/29/33	55	55				Gray-brown, saturated, very dense, fine SAND, little silt, trace medium sand, stratified -GLACIOLACUSTRINE DEPOSIT-(SM)	G#248325 A-2-4, SM
95											
	20D	24/20	96.0 - 98.0	15/15/24/30	39	39				Gray-brown, saturated, dense, fine SAND, little silt, trace medium sand, stratified -GLACIOLACUSTRINE DEPOSIT-(SM)	G#248325 A-2-4, SM
100											

Remarks:
1. As-drilled coordinates of test borings determined by MaineDOT and provided to Haley & Aldrich in NAD 83 Maine 2000 West Zone Coordinate System. As-drilled coordinates related to station and offset information by TranSystems.
2. DS-1 = direct shear test no.; FA = friction angle; c = cohesion; psf = pounds per square foot.

Stratification lines represent approximate boundaries between soil types; transitions may be gradual.
* Water level readings have been made at times and under conditions stated. Groundwater fluctuations may occur due to conditions other than those present at the time measurements were made.

Page 2 of 3
Boring No.: BB-RAR-115

Maine Department of Transportation
Soil/Rock Exploration Log
US CUSTOMARY UNITS

Project: Martin Memorial Bridge Replacement
Location: Route 232 - Rumford, Maine
Boring No.: BB-RAR-115
PIN: 15105.00

Driller:	Maine Test Borings	**Elevation (ft.)**	597.1	**Auger ID/OD:**	--
Operator:	B. Enos	**Datum:**	NAVD 88	**Sampler:**	Split Spoon-1.375 in. ID
Logged By:	B. Babcock	**Rig Type:**	CME 45 Skid on Spud Barge	**Hammer Wt./Fall:**	HW/NW-300/16; S-140/30
Date Start/Finish:	07-03-2012/07-04-2012	**Drilling Method:**	HW/NW Drive	**Core Barrel:**	NQ-2.0 in. ID
Boring Location:	Sta. 16+76, 24.5' Lt.	**Casing ID/OD:**	HW-4.0 in. ID/NW-3.0 in. ID	**Water Level*:**	Not Measured
Hammer Efficiency Factor: 0.6		**Hammer Type:**	Automatic☐ Hydraulic☐ Rope & Cathead☒		

Definitions:
D = Split Spoon Sample
MD = Unsuccessful Split Spoon Sample attempt
U = Thin Wall Tube Sample
MU = Unsuccessful Thin Wall Tube Sample attempt
V = Insitu Vane Shear Test
MV = Unsuccessful Insitu Vane Shear Test attempt
R = Rock Core Sample
SSA = Solid Stem Auger
HSA = Hollow Stem Auger
RC = Roller Cone
WOH = weight of 140lb. hammer
WOR = weight of rods
WO1P = Weight of one person
S=u=(~1~a~b~) = Insitu Field Vane Shear Strength (psf)
T=v = Pocket Torvane Shear Strength (psf)
q=p = Unconfined Compressive Strength (ksf)
N-uncorrected = Raw field SPT N-value
Hammer Efficiency Factor = Annual Calibration Value
N=6-0 = SPT N-uncorrected corrected for hammer efficiency
N=6-0 = (Hammer Efficiency Factor/60%)*N-uncorrected
S=u=(~4~a~b~) = Lab Vane Shear Strength (psf)
WC = water content, percent
LL = Liquid Limit
PL = Plastic Limit
PI = Plasticity Index
G = Grain Size Analysis
C = Consolidation Test

Sample Information

Depth (ft.)	Sample No.	Pen./Rec. (in.)	Sample Depth (ft.)	Blows (6 in.) Shear Strength (psf) or RQD (%)	N-uncorrected	N=6-0	Casing Blows	Elevation (ft.)	Graphic Log	Visual Description and Remarks	Laboratory Testing Results/ AASHTO and Unified Class.
100							OPEN				
	21D	24/24	101.0 - 103.0	20/24/24/33	48	48				Gray-brown with brown, saturated, dense, fine SAND, little silt, trace medium sand, stratified -GLACIOLACUSTRINE DEPOSIT-(SM)	G#248326 A-2-4, SM
105											
	22D	24/22	106.0 - 108.0	17/22/23/23	45	45				Gray-brown with orange-brown, saturated, dense, fine SAND, trace medium sand, little silt -GLACIOLACUSTRINE DEPOSIT-(SM)	G#248326 A-2-4, SM
110										Note: Driller notes stratum change at approximately 110.8 ft. 110.8	
	23D	10/6	111.0 - 111.8	73/100(3.0")				486.3		Gray-brown with orange-brown, saturated, very dense, fine to medium SAND, trace silt, trace gravel, gravel fraction weathered, stratified -GLACIAL TILL-(SW-SM)	
							40				
							75				
							100				
115								481.1		116.0	
	24D R1	3/3 60/48	116.0 - 116.3 116.3 - 121.3	100(3") RQD = 73%			50(4.0")			Top of Bedrock at El. 481.1 Recovered 3 in. highly weathered GNEISS. Distinct rock fabric. Light purple-gray, fine to coarse grained micaceous GNEISS. Hard, very slightly weathered. Joints dipping at low to moderate angles parallel to foliation. Moderately close, rough, planar, discolored, open. Rock Mass Quality=Fair Recovery=80% -LITTLETON FORMATION- R1 Core Times (min:sec): 116.3-117.3' (4:18); 117.3-118.3'(2:55); 118.3-119.3' (2:28); 119.3-120.3' (2:22); 120.3-121.3' (1:31) Note: Drill action and recovery suggests severely weathered zone between 120.3 and 121.3 ft.	
120											
	R2	60/56	121.3 - 126.3	RQD = 38%						Light purple-gray, fine to coarse grained micaceous GNEISS. Hard to moderately hard, slightly weathered. Joints dipping at low to moderate angles, parallel to foliation, close, smooth, planar, discolored, open. Near total water loss throughout drilling. Frequent drill breaks throughout recovery. Rock Mass Quality=Poor Recovery=93% -LITTLETON FORMATION- R2 Core Times (min:sec): 121.3-122.3' (2:23); 122.3-123.3' (2:40); 123.3-124.3' (2:23); 124.3-125.3' (2:25); 125.3-126.3' (2:19)	
125								470.8		126.3	
										Bottom of Exploration at 126.3 feet below ground surface.	
130											
135											
140											
145											
150											

Remarks:
1. As-drilled coordinates of test borings determined by MaineDOT and provided to Haley & Aldrich in NAD 83 Maine 2000 West Zone Coordinate System. As-drilled coordinates related to station and offset information by TranSystems.
2. DS-1 = direct shear test no.; FA = friction angle; c = cohesion; psf = pounds per square foot.

Stratification lines represent approximate boundaries between soil types; transitions may be gradual.
* Water level readings have been made at times and under conditions stated. Groundwater fluctuations may occur due to conditions other than those present at the time measurements were made.

Page 3 of 3
Boring No.: BB-RAR-115

HALEY & ALDRICH

STATE OF MAINE
DEPARTMENT OF TRANSPORTATION
BH-1510(500)X
WIN 15105.00
BRIDGE NO. 3248
BRIDGE PLANS

STATE OF MAINE WAYNE A. CHADBOURNE No. 10620 PROFESSIONAL ENGINEER

	SIGNATURE	
	10620	
	P.E. NUMBER	
	5/29/2013	
	DATE	

PROJ. MANAGER	S. BRIDGE	BY	DATE
DESIGN-DETAILED	B. STEINERT	B. STEINERT	02/2013
CHECKED-REVIEWED	W. CHADBOURNE	W. CHADBOURNE	02/2013
DESIGN2-DETAILED2			
DESIGN3-DETAILED3			
REVISIONS 1			
REVISIONS 2			
REVISIONS 3			
REVISIONS 4			
FIELD CHANGES			

MARTIN MEMORIAL BRIDGE
ANDROSCOGGIN RIVER
RUMFORD OXFORD COUNTY

BORING LOGS

SHEET NUMBER
55
OF 95

Filename: ...\0030\Road\V056_BoringLogs.dgn Division: BRIDGE Username: T SANDELL Date:5/29/2013

Maine Department of Transportation
Soil/Rock Exploration Log
US CUSTOMARY UNITS

Project: Martin Memorial Bridge Replacement
Location: Route 232 - Rumford, Maine
Boring No.: BB-RAR-116
PIN: 15105.00

Driller:	Maine Test Borings	**Elevation (ft.)**	597.1	**Auger ID/OD:**	--
Operator:	B. Enos	**Datum:**	NAVD 88	**Sampler:**	Split Spoon-1.375 in. ID
Logged By:	B. Babcock/B. Steinert	**Rig Type:**	CME 45 Skid on Spud Barge	**Hammer Wt./Fall:**	HW/NW-300/16; S-140/30
Date Start/Finish:	07-05-2012/07-11-2012	**Drilling Method:**	HW/NW Drive	**Core Barrel:**	NQ-2.0 in. ID
Boring Location:	Sta. 16+74, 17.1' Rt.	**Casing ID/OD:**	HW-4.0 in. ID/NW-3.0 in. ID	**Water Level**:**	Not Measured
Hammer Efficiency Factor: 0.6		**Hammer Type:**	Automatic☐ Hydraulic☐ Rope & Cathead☒		

Definitions:
D = Split Spoon Sample
MD = Unsuccessful Split Spoon Sample attempt
U = Thin Wall Tube Sample
MU = Unsuccessful Thin Wall Tube Sample attempt
V = Insitu Vane Shear Test
MV = Unsuccessful Insitu Vane Shear Test attempt
R = Rock Core Sample
SSA = Solid Stem Auger
HSA = Hollow Stem Auger
RC = Roller Cone
WOH = weight of 140lb. hammer
WOR = weight of rods
WO1P = Weight of one person
S-u = Insitu Field Vane Shear Strength (psf)
T-v = Pocket Torvane Shear Strength (psf)
q-p = Unconfined Compressive Strength (ksf)
N-uncorrected = Raw field SPT N-value
Hammer Efficiency Factor = Annual Calibration Value
N-6-0 = SPT N-uncorrected corrected for hammer efficiency
N-6-0 = (Hammer Efficiency Factor/60%)*N-uncorrected
S-u-(~I~a~b~) = Lab Vane Shear Strength (psf)
WC = water content, percent
LL = Liquid Limit
PL = Plastic Limit
PI = Plasticity Index
G = Grain Size Analysis
C = Consolidation Test

Sample Information

Depth (ft.)	Sample No.	Pen./Rec. (in.)	Sample Depth (ft.)	Blows (/6 in.) Shear Strength (psf) or RQD (%)	N-uncorrected	N-6-0	Casing Blows	Elevation (ft.)	Graphic Log	Visual Description and Remarks	Laboratory Testing Results/ AASHTO and Unified Class.
0	1D*	24/6	0.0 - 2.0	1/2/3/2	5	5	0			Light gray-brown, saturated, loose, fine SAND, trace fine gravel, trace plant fiber -ALLUVIAL DEPOSIT-(SP) Note: * indicates 3 in. diameter split spoon, 140 lb. hammer used to collect sample. Note: Wood in wash between approximately 3.0 and 4.5 ft.	
							3				
							3				
							5				
							30				
5	2D*	24/12	5.0 - 7.0	14/13/8/7	21	21	20			Light gray-brown, saturated, medium dense, fine to coarse SAND, some fine to coarse gravel, trace silt -ALLUVIAL DEPOSIT-(SW)	
							28				
							19				
							24				
							41				
10	3D	24/18	10.0 - 12.0	3/2/4/3	6	6	23			Light gray-brown, saturated, loose, fine SAND, trace medium sand, little silt, stratified -ALLUVIAL DEPOSIT-(SM) Note: Drilling mud introduced to borehole at 15.0 ft.	G#248327 A-2-4, SM
							29				
							36				
							65				
							93				
15	4D	24/18	15.0 - 17.0	3/3/4/5	7	7	OPEN			Light gray-brown, saturated, loose, fine SAND, trace medium sand, little silt, stratified -ALLUVIAL DEPOSIT-(SM)	G#248327 A-2-4, SM
20	5D	24/14	20.0 - 22.0	5/6/6/6	12	12				Light brown with orange-brown, saturated, medium dense, fine SAND, trace medium sand, little silt, stratified -ALLUVIAL DEPOSIT-(SM)	G#248327 A-2-4, SM
25	6D	24/16	25.0 - 27.0	8/9/6/8	15	15	OPEN			Red-brown to gray-brown, saturated, medium dense, fine SAND, some silt, stratified -GLACIOLACUSTRINE DEPOSIT-(SM) Note: Drove HW casing through open hole to 25.0 ft following 6D.	
30	7D	24/14	30.0 - 32.0	3/4/5/9	9	9				Light-brown, saturated, loose, fine SAND, some silt, stratified -GLACIOLACUSTRINE DEPOSIT-(SM)	
35	8D	24/16	35.0 - 37.0	7/9/9/13	18	18				Light brown with red-brown and gray-brown, fine SAND, some silt, trace medium sand, stratified -GLACIOLACUSTRINE DEPOSIT-(SM)	
40	9D	24/14	40.0 - 42.0	12/12/11/13	23	23		557.1		40.0 Light gray-brown with red-brown, saturated, medium dense, fine SAND, trace medium sand, some silt, stratified with very thin bedding in bottom 6 in. of recovery, grading to finer material -GLACIOLACUSTRINE DEPOSIT-(SM) Note: Drove HW casing through open hole to 40.0 ft following 9D.	G#248328 A-2-4, SM
45	10D	24/16	45.0 - 47.0	8/11/11/11	22	22				Light brown with red-brown, saturated, medium dense, fine SAND, trace medium sand, some silt, stratified with very thin bedding in top 8 in. of recovery, grading to coarser material -GLACIOLACUSTRINE DEPOSIT-(SM)	G#248328 A-2-4, SM
50								548.6		48.5 Note: Drive HW casing through open hole to 41.4 ft following 10D.	

Remarks:

1. As-drilled coordinates of test borings determined by MaineDOT and provided to Haley & Aldrich in NAD 83 Maine 2000 West Zone Coordinate System. As-drilled coordinates related to station and offset information by TranSystems.

Stratification lines represent approximate boundaries between soil types; transitions may be gradual.

** Water level readings have been made at times and under conditions stated. Groundwater fluctuations may occur due to conditions other than those present at the time measurements were made.

Page 2 of 6
Boring No.: BB-RAR-116

Maine Department of Transportation
Soil/Rock Exploration Log
US CUSTOMARY UNITS

Project: Martin Memorial Bridge Replacement
Location: Route 232 - Rumford, Maine
Boring No.: BB-RAR-116
PIN: 15105.00

Driller:	Maine Test Borings	**Elevation (ft.)**	597.1	**Auger ID/OD:**	--
Operator:	B. Enos	**Datum:**	NAVD 88	**Sampler:**	Split Spoon-1.375 in. ID
Logged By:	B. Babcock/B. Steinert	**Rig Type:**	CME 45 Skid on Spud Barge	**Hammer Wt./Fall:**	HW/NW-300/16; S-140/30
Date Start/Finish:	07-05-2012/07-11-2012	**Drilling Method:**	HW/NW Drive	**Core Barrel:**	NQ-2.0 in. ID
Boring Location:	Sta. 16+74, 17.1' Rt.	**Casing ID/OD:**	HW-4.0 in. ID/NW-3.0 in. ID	**Water Level**:**	Not Measured
Hammer Efficiency Factor: 0.6		**Hammer Type:**	Automatic☐ Hydraulic☐ Rope & Cathead☒		

Definitions:
D = Split Spoon Sample
MD = Unsuccessful Split Spoon Sample attempt
U = Thin Wall Tube Sample
MU = Unsuccessful Thin Wall Tube Sample attempt
V = Insitu Vane Shear Test
MV = Unsuccessful Insitu Vane Shear Test attempt
R = Rock Core Sample
SSA = Solid Stem Auger
HSA = Hollow Stem Auger
RC = Roller Cone
WOH = weight of 140lb. hammer
WOR = weight of rods
WO1P = Weight of one person
S-u = Insitu Field Vane Shear Strength (psf)
T-v = Pocket Torvane Shear Strength (psf)
q-p = Unconfined Compressive Strength (ksf)
N-uncorrected = Raw field SPT N-value
Hammer Efficiency Factor = Annual Calibration Value
N-6-0 = SPT N-uncorrected corrected for hammer efficiency
N-6-0 = (Hammer Efficiency Factor/60%)*N-uncorrected
S-u-(~I~a~b~) = Lab Vane Shear Strength (psf)
WC = water content, percent
LL = Liquid Limit
PL = Plastic Limit
PI = Plasticity Index
G = Grain Size Analysis
C = Consolidation Test

Sample Information

Depth (ft.)	Sample No.	Pen./Rec. (in.)	Sample Depth (ft.)	Blows (/6 in.) Shear Strength (psf) or RQD (%)	N-uncorrected	N-6-0	Casing Blows	Elevation (ft.)	Graphic Log	Visual Description and Remarks	Laboratory Testing Results/ AASHTO and Unified Class.
50	11D	24/20	50.0 - 52.0	8/7/9/11	16	16	OPEN			Light-brown with red-brown, saturated, medium dense, fine to medium SAND, trace silt, stratified with thin bedding -GLACIOLACUSTRINE DEPOSIT-(SP)	
55	12D	24/18	55.0 - 57.0	6/7/5/6	12	12				Light-brown with red-brown, saturated, medium dense, fine to medium SAND, trace silt, stratified with thin bedding -GLACIOLACUSTRINE DEPOSIT-(SP) Note: Drove HW casing through open hole to 50.4 ft following 12D.	
60	13D	24/20	60.0 - 62.0	11/13/13/14	26	26				Light-brown with red-brown, saturated, medium dense, fine to medium SAND, trace silt -GLACIOLACUSTRINE DEPOSIT-(SP)	
65	14D	24/18	65.0 - 67.0	9/10/11/12	21	21				Light-brown with red-brown, saturated, medium dense, fine to medium SAND, trace silt -GLACIOLACUSTRINE DEPOSIT-(SP) Note: Drive HW casing through open hole to 60 ft following 14D. Mixed new batch of drilling mud.	
70	15D	24/14	70.0 - 72.0	6/9/12/15	21	21				Light brown, moist, medium dense, medium to fine SAND, trace silt, stratified in bottom 5 in. spoon with more fines -GLACIOLACUSTRINE DEPOSIT-(SP)	
75	16D	24/17	75.0 - 77.0	7/9/13/24	22	22	OPEN			Gray-brown and tan, moist, medium dense, fine SAND with thin silt laminae -GLACIOLACUSTRINE DEPOSIT-(SP)	
80	17D	24/16	80.0 - 82.0	20/26/25/28	51	51				Gray-brown, moist, very dense, silty fine SAND, trace medium sand -GLACIOLACUSTRINE DEPOSIT-(SP)	
										Note: Gravel/cobble layer encountered between approximately 83.5 ft to 84.5 ft.	
85	18D	24/19	85.0 - 87.0	13/19/23/28	42	42				Gray-brown, saturated, dense, fine SAND, trace silt -GLACIOLACUSTRINE DEPOSIT-(SP)	
										Note: Drive casing through open hole to 80.7 ft after 18D.	
										Note: Gravel/cobble layer encountered from approximately 89.5 to 90.0 ft.	
90											
	19D	9/9	91.0 - 91.8	19/75(3.0")				505.6		Gray-brown, saturated, medium dense, fine SAND, trace silt to gray-brown to red-brown, saturated, medium dense to dense, clayey fine to medium SAND, decomposed rock fragments recovered in bottom 3 in. of spoon. -GLACIOLACUSTRINE DEPOSIT-(SP)	
	R1	60/14	93.0 - 98.0	RQD = 12%						91.5 Top of Bedrock at El. 505.6 Gray, medium to fine grained SCHIST. Moderately hard, fresh to moderately weathered. Joints moderate to steeply dipping, very close to close, open, 6 in. granitic intrusion. Note: Variable erratic drilling, sand observed in wash water, frequent color changes in wash water. Probable weathered zones. Rock Mass Quality=Very Poor Recovery=23% -LITTLETON FORMATION- R1 Core Times (min:sec): 93.0-94.0' (1:41); 94.0-95.0' (2:02); 95.0-96.0' (1:18); 96.0-97.0' (1:40); 97.0-98.0' (1:00) Gray, medium to fine grained SCHIST. Moderately hard, fresh to severely weathered. Few observed joints are moderately dipping, parallel to foliation, very close, open. Run is severely fractured	
95											
	R2	38/9	98.0 - 101.2	RQD = 0%							
100											

Remarks:

1. As-drilled coordinates of test borings determined by MaineDOT and provided to Haley & Aldrich in NAD 83 Maine 2000 West Zone Coordinate System. As-drilled coordinates related to station and offset information by TranSystems.

Stratification lines represent approximate boundaries between soil types; transitions may be gradual.

** Water level readings have been made at times and under conditions stated. Groundwater fluctuations may occur due to conditions other than those present at the time measurements were made.

Page 4 of 6
Boring No.: BB-RAR-116

Maine Department of Transportation
Soil/Rock Exploration Log
US CUSTOMARY UNITS

Project: Martin Memorial Bridge Replacement
Location: Route 232 - Rumford, Maine
Boring No.: BB-RAR-116
PIN: 15105.00

Driller:	Maine Test Borings	**Elevation (ft.)**	597.1	**Auger ID/OD:**	--
Operator:	B. Enos	**Datum:**	NAVD 88	**Sampler:**	Split Spoon-1.375 in. ID
Logged By:	B. Babcock/B. Steinert	**Rig Type:**	CME 45 Skid on Spud Barge	**Hammer Wt./Fall:**	HW/NW-300/16; S-140/30
Date Start/Finish:	07-05-2012/07-11-2012	**Drilling Method:**	HW/NW Drive	**Core Barrel:**	NQ-2.0 in. ID
Boring Location:	Sta. 16+74, 17.1' Rt.	**Casing ID/OD:**	HW-4.0 in. ID/NW-3.0 in. ID	**Water Level**:**	Not Measured
Hammer Efficiency Factor: 0.6		**Hammer Type:**	Automatic☐ Hydraulic☐ Rope & Cathead☒		

Definitions:
D = Split Spoon Sample
MD = Unsuccessful Split Spoon Sample attempt
U = Thin Wall Tube Sample
MU = Unsuccessful Thin Wall Tube Sample attempt
V = Insitu Vane Shear Test
MV = Unsuccessful Insitu Vane Shear Test attempt
R = Rock Core Sample
SSA = Solid Stem Auger
HSA = Hollow Stem Auger
RC = Roller Cone
WOH = weight of 140lb. hammer
WOR = weight of rods
WO1P = Weight of one person
S-u = Insitu Field Vane Shear Strength (psf)
T-v = Pocket Torvane Shear Strength (psf)
q-p = Unconfined Compressive Strength (ksf)
N-uncorrected = Raw field SPT N-value
Hammer Efficiency Factor = Annual Calibration Value
N-6-0 = SPT N-uncorrected corrected for hammer efficiency
N-6-0 = (Hammer Efficiency Factor/60%)*N-uncorrected
S-u-(~I~a~b~) = Lab Vane Shear Strength (psf)
WC = water content, percent
LL = Liquid Limit
PL = Plastic Limit
PI = Plasticity Index
G = Grain Size Analysis
C = Consolidation Test

Sample Information

Depth (ft.)	Sample No.	Pen./Rec. (in.)	Sample Depth (ft.)	Blows (/6 in.) Shear Strength (psf) or RQD (%)	N-uncorrected	N-6-0	Casing Blows	Elevation (ft.)	Graphic Log	Visual Description and Remarks	Laboratory Testing Results/ AASHTO and Unified Class.
100										(rubble-like pieces). Rock Mass Quality=Very Poor Recovery=26% -LITTLETON FORMATION- R2 Core Times (min:sec): 98.0-99.0' (0:27); 99.0-100.0' (0:37); 100.0-101.0' (3:16) Gray, medium to fine grained SCHIST. Moderately hard, fresh to severely weathered. Few observed joints are moderately dipping, parallel to foliation, very close, open. Run is severely fractured (rubble-like pieces). Rock Mass Quality=Very Poor Recovery=100% -LITTLETON FORMATION- R3 Core Times (min:sec): 101.2-102.2' (2:48); 102.2-103.2' (1:12); 103.2-104.2' (3:41) Gray, medium to fine grained SCHIST. Moderately hard, fresh to moderately weathered. Few observed joints are moderately dipping, parallel to foliation, very close, open. Run is severely fractured (rubble-like pieces). Rock Mass Quality=Very Poor Recovery=100% R4 Core Times (min:sec): 102.4-103.2' (2:24) Gray, medium to fine grained SCHIST. Moderately hard, fresh to severely weathered. Few observed joints are moderately dipping, parallel to foliation, very close, open. Run is severely fractured (rubble-like pieces). Rock Mass Quality=Poor Recovery=83% -LITTLETON FORMATION- R5 Core Times (min:sec): 103.2-104.2' (3:30) Gray, medium to fine grained SCHIST. Moderately hard, fresh to severely weathered. Few observed joints are moderately dipping, parallel to foliation, very close, open. Run is severely fractured (rubble-like pieces). Occasional 2 to 3 in. quartz intrusions and occasional quartz veins. Rock quality improves with depth becoming sound at approximately 105.0 ft. Rock Mass Quality=Very Poor Recovery=100% R6 Core Times (min:sec): 104.4-105.4' (2:15); 105.4-106.4' (3:22) Gray to dark gray, medium to fine grained SCHIST. Moderately hard, fresh to moderately weathered. Joints dipping at low to moderate angles, parallel to foliation, very close to moderately close, tight to open. Rock Mass Quality=Fair Recovery=83% R7 Core Times (min:sec): 106.9-107.9' (2:58); 107.9-108.9' (2:24); 108.9-109.9' (2:53); 109.9-110.9' (3:46) Gray to dark gray, medium to fine grained SCHIST. Moderately hard, fresh to moderately weathered. Joints dipping at low to moderate angles, parallel to foliation, very close to moderately close, tight to open. Discolored, rubble-like pieces approximately 4 in. at top of run, one quartz vein. Rock Mass Quality=Fair Recovery=100% R8 Core Times (min:sec) 110.9-111.9' (2:11) 111.9 Bottom of Exploration at 111.9 feet below ground surface.	
	R3	14/14	101.2 - 102.4	RQD = 0%							
	R4	11/11	102.4 - 103.2	RQD = 0%							
	R5	14/12	103.2 - 104.4	RQD = 29%							
	R6	30/30	104.4 - 106.9	RQD = 80%							
105											
	R7	48/41	106.9 - 110.9	RQD = 52%							
110											
	R8	12/12	110.9 - 111.9	RQD = 58%							
								485.2			
115											
120											
125											
130											
135											
140											
145											
150											

Remarks:

1. As-drilled coordinates of test borings determined by MaineDOT and provided to Haley & Aldrich in NAD 83 Maine 2000 West Zone Coordinate System. As-drilled coordinates related to station and offset information by TranSystems.

Stratification lines represent approximate boundaries between soil types; transitions may be gradual.

** Water level readings have been made at times and under conditions stated. Groundwater fluctuations may occur due to conditions other than those present at the time measurements were made.

Page 6 of 6
Boring No.: BB-RAR-116

STATE OF MAINE
DEPARTMENT OF TRANSPORTATION

BH-1510(500)X

WIN 15105.00

BRIDGE NO. 3248

BRIDGE PLANS

STATE OF MAINE
WAYNE A. CHADBOURNE
No. 10620
PROFESSIONAL ENGINEER

PROJ. MANAGER	S. BODGE	BY	DATE
DESIGN-DETAILED	B. STEINERT	B. STEINERT	02/2013
CHECKED-REVIEWED	W. CHADBOURNE	W. CHADBOURNE	02/2013
DESIGN2-DETAILED2			
DESIGN3-DETAILED3			
REVISIONS 1			
REVISIONS 2			
REVISIONS 3			
REVISIONS 4			
FIELD CHANGES			

SIGNATURE
10620
P.E. NUMBER
5/29/2013
DATE

MARTIN MEMORIAL BRIDGE
ANDROSCOGGIN RIVER
RUMFORD OXFORD COUNTY

BORING LOGS

HALEY & ALDRICH

SHEET NUMBER
56
OF 95

Filename: ...\0030\Road\057_BoringLogs.dgn Division: BRIDGE Username: T SANDELL Date:5/29/2013

Maine Department of Transportation
Soil/Rock Exploration Log
US CUSTOMARY UNITS

Project: Martin Memorial Bridge Replacement
Location: Route 232 - Rumford, Maine
Boring No.: BB-RAR-117
PIN: 15105.00

Driller:	Maine Test Borings	**Elevation (ft.)**	596.1	**Auger ID/OD:**	--
Operator:	B. Enos	**Datum:**	NAVD 88	**Sampler:**	Split Spoon-1.375 in. ID
Logged By:	B. Babcock	**Rig Type:**	CME 45 Skid on Spud Barge	**Hammer Wt./Fall:**	HW/NW-300/24; S-140/30
Date Start/Finish:	06-27-2012/06-29-2012	**Drilling Method:**	HW/NW Drive	**Core Barrel:**	NQ - 2.0 in. ID
Boring Location:	Sta. 18+69, 30.5' Lt.	**Casing ID/OD:**	HW-4.0 in. ID/NW-3.0 in. ID	**Water Level*:**	Not Measured
Hammer Efficiency Factor: 0.6		**Hammer Type:**	Automatic☐ Hydraulic☐ Rope & Cathead☒		

Definitions:
D = Split Spoon Sample
MD = Unsuccessful Split Spoon Sample attempt
U = Thin Wall Tube Sample
MU = Unsuccessful Thin Wall Tube Sample attempt
V = Insitu Vane Shear Test
MV = Unsuccessful Insitu Vane Shear Test attempt
R = Rock Core Sample
SSA = Solid Stem Auger
HSA = Hollow Stem Auger
RC = Roller Cone
WOH = weight of 140lb. hammer
WOR = weight of rods
WO1P = Weight of one person
S=u=(-t-a-b-) = Insitu Field Vane Shear Strength (psf)
T=v = Pocket Torvane Shear Strength (psf)
q=p = Unconfined Compressive Strength (ksf)
N-uncorrected = Raw field SPT N-value
Hammer Efficiency Factor = Annual Calibration Value
N=6-0 = SPT N-uncorrected corrected for hammer efficiency
N=6-0 = (Hammer Efficiency Factor/60%)*N-uncorrected
S=u=(-t-a-b-) = Lab Vane Shear Strength (psf)
WC = water content, percent
LL = Liquid Limit
PL = Plastic Limit
PI = Plasticity Index
G = Grain Size Analysis
C = Consolidation Test

Depth (ft.)	Sample No.	Pen./Rec. (in.)	Sample Depth (ft.)	Blows (6 in.) Shear Strength (psf) or RQD (%)	N-uncorrected	N=6-0	Casing Blows	Elevation (ft.)	Graphic Log	Visual Description and Remarks	Laboratory Testing Results/ AASHTO and Unified Class.
0	*1D	24/6	0.0 - 2.0	1/1/2/3	3	3	PUSH			Brown, saturated, very loose, medium to coarse SAND, some gravel, trace fine sand -ALLUVIAL DEPOSIT-(SW) Note: * Indicates sample collected with 3 in. spoon and 140 lb. hammer.	
							3				
							8				
							16				
5							14				
							18				
	*2D	24/12	6.0 - 8.0	4/4/4/5	8	8	6			Light gray-brown, wet, loose, fine SAND, trace medium sand and silt, stratified -ALLUVIAL DEPOSIT-(SP)	G#248329 A-2-4, SP
							7				
							8				
							19				
10							38				
	3D	24/22	11.0 - 13.0	2/2/3/3	5	5	15			Light gray-brown, saturated, loose, fine SAND, trace medium sand and silt, stratified -ALLUVIAL DEPOSIT-(SP)	G#248329 A-2-4, SP
							18				
							30				
							72				
15							115			16.0	
	4D	24/18	16.0 - 18.0	1/2/3/3	5	5	43	580.1		Light gray-brown, saturated, loose, silty fine SAND, stratified -GLACIOLACUSTRINE DEPOSIT-(SM)	G#248330 A-4, SM
							68				
							63				
							146				
20							169				
	5D	24/22	21.0 - 23.0	2/2/3/3	5	5	70			Light gray-brown, saturated, loose, silty fine SAND, stratified -GLACIOLACUSTRINE DEPOSIT-(SM)	G#248330 A-4,SM
							49				
							40				
							61				
25							67				
	6D	24/24	26.0 - 28.0	3/3/4/4	7	7	OPEN	570.1		26.0 Light gray-brown with light brown, saturated, loose, sandy SILT, stratified -GLACIOLACUSTRINE DEPOSIT-(ML) Note: HW casing driven through open hole between 26.0 and 51.0 ft after washing ahead of casing with roller bit.	G#248331 A-4, ML
30											
	7D	24/24	31.0 - 33.0	4/4/6/6	10	10		564.6		Light gray-brown with light brown, saturated, stiff, sandy SILT, stratified -GLACIOLACUSTRINE DEPOSIT-(ML)	G#248331 A-4, ML
										31.5 Light brown, saturated, loose, fine SAND, trace silt, stratified -GLACIOLACUSTRINE DEPOSIT-(SP)	
35											
	8D	24/16	36.0 - 38.0	5/7/9/11	16	16				Light brown, saturated, medium dense, silty fine SAND, stratified -GLACIOLACUSTRINE DEPOSIT-(SM)	G#248332 A-4, SM WC=28.6% GTX#12194 DS-10 FA=34.3˚o c=192 psf
40											
	9D	24/16	41.0 - 43.0	4/6/11/11	17	17				Light gray-brown, saturated, medium dense, silty fine SAND, stratified -GLACIOLACUSTRINE DEPOSIT-(SM)	G#248332 A-4, SM WC=28.6% GTX#12194 DS-10 FA=34.3˚o c=192 psf
45											
	10D	24/24	46.0 - 48.0	WOR/3/8/9	11	11				Light gray-brown with light brown, saturated, medium dense, fine SAND, trace medium sand, trace silt, stratified -GLACIOLACUSTRINE DEPOSIT-(SP-SM)	
50											

Remarks:
1. As-drilled coordinates of test borings determined by MaineDOT and provided to Haley & Aldrich in NAD 83 Maine 2000 West Zone Coordinate System. As-drilled coordinates related to station and offset information by TranSystems.
2. DS-1 = direct shear test no.; FA = friction angle; c = cohesion; psf = pounds per square foot.

Stratification lines represent approximate boundaries between soil types; transitions may be gradual.
* Water level readings have been made at times and under conditions stated. Groundwater fluctuations may occur due to conditions other than those present at the time measurements were made.

Maine Department of Transportation
Soil/Rock Exploration Log
US CUSTOMARY UNITS

Project: Martin Memorial Bridge Replacement
Location: Route 232 - Rumford, Maine
Boring No.: BB-RAR-117
PIN: 15105.00

Driller:	Maine Test Borings	**Elevation (ft.)**	596.1	**Auger ID/OD:**	--
Operator:	B. Enos	**Datum:**	NAVD 88	**Sampler:**	Split Spoon-1.375 in. ID
Logged By:	B. Babcock	**Rig Type:**	CME 45 Skid on Spud Barge	**Hammer Wt./Fall:**	HW/NW-300/24; S-140/30
Date Start/Finish:	06-27-2012/06-29-2012	**Drilling Method:**	HW/NW Drive	**Core Barrel:**	NQ - 2.0 in. ID
Boring Location:	Sta. 18+69, 30.5' Lt.	**Casing ID/OD:**	HW-4.0 in. ID/NW-3.0 in. ID	**Water Level*:**	Not Measured
Hammer Efficiency Factor: 0.6		**Hammer Type:**	Automatic☐ Hydraulic☐ Rope & Cathead☒		

Definitions:
D = Split Spoon Sample
MD = Unsuccessful Split Spoon Sample attempt
U = Thin Wall Tube Sample
MU = Unsuccessful Thin Wall Tube Sample attempt
V = Insitu Vane Shear Test
MV = Unsuccessful Insitu Vane Shear Test attempt
R = Rock Core Sample
SSA = Solid Stem Auger
HSA = Hollow Stem Auger
RC = Roller Cone
WOH = weight of 140lb. hammer
WOR = weight of rods
WO1P = Weight of one person
S=u=(-t-a-b-) = Insitu Field Vane Shear Strength (psf)
T=v = Pocket Torvane Shear Strength (psf)
q=p = Unconfined Compressive Strength (ksf)
N-uncorrected = Raw field SPT N-value
Hammer Efficiency Factor = Annual Calibration Value
N=6-0 = SPT N-uncorrected corrected for hammer efficiency
N=6-0 = (Hammer Efficiency Factor/60%)*N-uncorrected
S=u=(-t-a-b-) = Lab Vane Shear Strength (psf)
WC = water content, percent
LL = Liquid Limit
PL = Plastic Limit
PI = Plasticity Index
G = Grain Size Analysis
C = Consolidation Test

Depth (ft.)	Sample No.	Pen./Rec. (in.)	Sample Depth (ft.)	Blows (6 in.) Shear Strength (psf) or RQD (%)	N-uncorrected	N=6-0	Casing Blows	Elevation (ft.)	Graphic Log	Visual Description and Remarks	Laboratory Testing Results/ AASHTO and Unified Class.
50							OPEN			Note: Drill mud introduced to borehole at 51.0 ft.	
	11D	24/10	51.0 - 53.0	2/8/10/16	18	18				Light brown, saturated, medium dense, fine to medium SAND, trace gravel -GLACIOLACUSTRINE DEPOSIT-(SW)	
55											
	12D	24/16	56.0 - 58.0	7/9/11/20	20	20				Light brown with gray-brown, saturated, medium dense, fine SAND, trace medium sand, some silt, stratified -GLACIOLACUSTRINE DEPOSIT-(SM)	G#248333 A-2-4, SM WC=6.1% GTX12194 DS-11 FA=38.1˚o c=0 psf
60											
	13D	24/14	61.0 - 63.0	7/9/12/16	21	21				Light brown, saturated, medium dense, fine SAND, trace medium sand, some silt, stratified -GLACIOLACUSTRINE DEPOSIT-(SM)	G#248333 A-2-4, SM WC=6.1% GTX#12194 DS-11 FA=38.1˚o c=0 psf
										Note: Drill action indicates gravel/cobbles between approximately 64.0 and 66.0 ft.	
65											
	14D	24/20	66.0 - 68.0	14/13/13/15	26	26				Gray, saturated, medium dense, fine SAND, trace medium sand, some silt, stratified -GLACIOLACUSTRINE DEPOSIT-(SM)	G#248333 A-2-4, SM WC=6.1% GTX#12194 DS-11 FA=38.1˚o c=0 psf
70											
	15D	24/20	71.0 - 73.0	11/14/14/16	28	28				Gray, saturated, medium dense, fine SAND, trace silt, trace medium sand, stratified -GLACIOLACUSTRINE DEPOSIT-(SP-SM)	
75											
75							OPEN				
	16D	24/20	76.0 - 78.0	15/18/14/15	32	32				Gray, saturated, dense, fine SAND, little silt, stratified -GLACIOLACUSTRINE DEPOSIT-(SM)	
								517.9		78.2 Note: Drill action indicates cobble from approximately 78.2 to 78.7 ft. Rig chatter from approximately 78.2 to 82.7 ft, telescope NW casing to 83.0 ft.	
							18				
80											
							41				
							33				
							45				
	17D	24/24	83.0 - 85.0	12/38/70/99	108	108	40			Gray, wet, very dense, fine to coarse SAND, trace silt, trace fine gravel, stratified -GLACIOFLUVIAL DEPOSIT-(SW-SM)	
85							55				
							103				
	18D	13/12	86.0 - 87.1	35/56/50(1")	106	106	41			Gray, saturated, very dense, fine to coarse SAND, trace gravel, stratified, occasional pockets of bonded material -GLACIOFLUVIAL DEPOSIT-(SW)	
							70	509.0		87.1	
							220	508.1		-GRAVEL/COBBLES- 88.0 Note: Attempted core run from approximately 87.5 to 91.0 ft with no recovery.	
							346				
90							475				
	19D	11/10	91.0 - 91.9	34/100(5.0")			68			Gray, saturated, very dense, fine to coarse SAND, trace gravel, trace silt, stratified, loosely bonded -GLACIOFLUVIAL DEPOSIT-(SW)	
							66			Note: Washed ahead of NW casing prior to driving.	
							115				
							210				
95							335				
	20D	17/16	96.0 - 97.4	71/77/100(5.0")			42			Gray, wet, very dense, fine to coarse SAND, little gravel, trace silt, stratified, occasional loose bonding -GLACIOFLUVIAL DEPOSIT-(SW)	
							33				
							36				
100							96			Note: Washed ahead of casing prior to driving. Drill action indicates gravel between approximately 99.0 and 101.0 ft.	

Remarks:
1. As-drilled coordinates of test borings determined by MaineDOT and provided to Haley & Aldrich in NAD 83 Maine 2000 West Zone Coordinate System. As-drilled coordinates related to station and offset information by TranSystems.
2. DS-1 = direct shear test no.; FA = friction angle; c = cohesion; psf = pounds per square foot.

Stratification lines represent approximate boundaries between soil types; transitions may be gradual.
* Water level readings have been made at times and under conditions stated. Groundwater fluctuations may occur due to conditions other than those present at the time measurements were made.

Maine Department of Transportation
Soil/Rock Exploration Log
US CUSTOMARY UNITS

Project: Martin Memorial Bridge Replacement
Location: Route 232 - Rumford, Maine
Boring No.: BB-RAR-117
PIN: 15105.00

Driller:	Maine Test Borings	**Elevation (ft.)**	596.1	**Auger ID/OD:**	--
Operator:	B. Enos	**Datum:**	NAVD 88	**Sampler:**	Split Spoon-1.375 in. ID
Logged By:	B. Babcock	**Rig Type:**	CME 45 Skid on Spud Barge	**Hammer Wt./Fall:**	HW/NW-300/24; S-140/30
Date Start/Finish:	06-27-2012/06-29-2012	**Drilling Method:**	HW/NW Drive	**Core Barrel:**	NQ - 2.0 in. ID
Boring Location:	Sta. 18+69, 30.5' Lt.	**Casing ID/OD:**	HW-4.0 in. ID/NW-3.0 in. ID	**Water Level*:**	Not Measured
Hammer Efficiency Factor: 0.6		**Hammer Type:**	Automatic☐ Hydraulic☐ Rope & Cathead☒		

Definitions:
D = Split Spoon Sample
MD = Unsuccessful Split Spoon Sample attempt
U = Thin Wall Tube Sample
MU = Unsuccessful Thin Wall Tube Sample attempt
V = Insitu Vane Shear Test
MV = Unsuccessful Insitu Vane Shear Test attempt
R = Rock Core Sample
SSA = Solid Stem Auger
HSA = Hollow Stem Auger
RC = Roller Cone
WOH = weight of 140lb. hammer
WOR = weight of rods
WO1P = Weight of one person
S=u=(-t-a-b-) = Insitu Field Vane Shear Strength (psf)
T=v = Pocket Torvane Shear Strength (psf)
q=p = Unconfined Compressive Strength (ksf)
N-uncorrected = Raw field SPT N-value
Hammer Efficiency Factor = Annual Calibration Value
N=6-0 = SPT N-uncorrected corrected for hammer efficiency
N=6-0 = (Hammer Efficiency Factor/60%)*N-uncorrected
S=u=(-t-a-b-) = Lab Vane Shear Strength (psf)
WC = water content, percent
LL = Liquid Limit
PL = Plastic Limit
PI = Plasticity Index
G = Grain Size Analysis
C = Consolidation Test

Depth (ft.)	Sample No.	Pen./Rec. (in.)	Sample Depth (ft.)	Blows (6 in.) Shear Strength (psf) or RQD (%)	N-uncorrected	N=6-0	Casing Blows	Elevation (ft.)	Graphic Log	Visual Description and Remarks	Laboratory Testing Results/ AASHTO and Unified Class.
100							247				
	21D	11/10	101.0 - 101.9	35/100(5.0")			45			Gray, wet, very dense, fine to coarse SAND, trace gravel, trace silt, stratified, occasional loose bonding -GLACIOFLUVIAL DEPOSIT-(SW) Note: Washed ahead of casing prior to driving from approximately 101.0 to 106.0 ft. Drill action indicates stratum change at approximately 104.5 ft.	
							47				
							118				
							330	491.6		104.5	
105							400				
	22D	5/4	106.0 - 106.4	100(5.0")			77			Gray, wet, very dense, fine to coarse SAND, some silt, little gravel, well bonded in-situ -GLACIAL TILL-(SM)	
							324				
							32			Note: Driller noted stratum change at approximately 110.0 ft.	
							49				
110							75	486.1		110.0	
	23D R1	8/6	111.0 - 111.7	74/100(3.0")			60			Recovered 6 in. completely weathered GNEISS consisting of dark green with gray, very dense, wet, SILT, some fine to coarse sand, little gravel, trace clay, distinct rock fabric. R1:Recovered 16 in. severely weathered GNEISS, probable boulder. 3 in. dark olive-green, moist, very dense, SILT, some clay, little fine to coarse sand, little fine to coarse gravel, well bonded in-situ. Gravel fraction well rounded. Probable GLACIAL TILL.	
			111.7 - 116.5				120				
							183	483.0		113.1	
							198				
115							250(10.0")				
	24D	12/10	116.5 - 117.5	52/150						Dark olive-gray, moist, very dense, SILT, some gravel, little fine to coarse sand, trace clay, well bonded in-situ, gravel fraction angular to sub-rounded -GLACIAL TILL-(ML)	
										Note: Driller noted stratum change at approximately 119.5 ft.	
								476.6		119.5 Top of Bedrock at El. 476.6	
120											
	R2	18/6	121.0 - 122.5	RQD = 22%						Green with gray, coarse grained, GNEISS. Hard, very slightly weathered. Joints indiscernible due to poor recovery. Rock Mass Quality=Very Poor Recovery=33% -LITTLETON FORMATION- R2 Core Times (min:sec): 121.0-122.0' (1:57); 122.0-122.5' (2:00)	
								473.6		122.5 Bottom of Exploration at 122.5 feet below ground surface.	
125											

Remarks:
1. As-drilled coordinates of test borings determined by MaineDOT and provided to Haley & Aldrich in NAD 83 Maine 2000 West Zone Coordinate System. As-drilled coordinates related to station and offset information by TranSystems.
2. DS-1 = direct shear test no.; FA = friction angle; c = cohesion; psf = pounds per square foot.

Stratification lines represent approximate boundaries between soil types; transitions may be gradual.
* Water level readings have been made at times and under conditions stated. Groundwater fluctuations may occur due to conditions other than those present at the time measurements were made.

HALEY & ALDRICH

STATE OF MAINE
DEPARTMENT OF TRANSPORTATION

BH-1510(500)X

WIN 15105.00

BRIDGE PLANS

BRIDGE NO. 3248

STATE OF MAINE WAYNE A. CHADBOURNE No. 10620 PROFESSIONAL ENGINEER

	BY	DATE
PROJ. MANAGER	S. BODGE	
DESIGN-DETAILED	B. STEINERT	02/2013
CHECKED-REVIEWED	W. CHADBOURNE	02/2013
DESIGN2-DETAILED2		
DESIGN3-DETAILED3		
REVISIONS 1		
REVISIONS 2		
REVISIONS 3		
REVISIONS 4		
FIELD CHANGES		

SIGNATURE
10620
P.E. NUMBER
5/29/2013
DATE

MARTIN MEMORIAL BRIDGE
ANDROSCOGGIN RIVER
RUMFORD OXFORD COUNTY

BORING LOGS

SHEET NUMBER
57
OF 95

Filename: ...\0030\Road\058_BoringLogs.dgn Division: BRIDGE Username: T SANDELL Date:5/29/2013

Maine Department of Transportation

Soil/Rock Exploration Log
US CUSTOMARY UNITS

Project: Martin Memorial Bridge Replacement
Location: Route 232 - Rumford, Maine
Boring No.: BB-RAR-118
PIN: 15105.00

Driller:	Maine Test Borings	**Elevation (ft.)**	596.8	**Auger ID/OD:**	--
Operator:	B. Enos	**Datum:**	NAVD 88	**Sampler:**	Split Spoon-1.375 in. ID
Logged By:	B. Babcock	**Rig Type:**	CME 45 Skid on Spud Barge	**Hammer Wt./Fall:**	HW/NW-300/24; S-140/30
Date Start/Finish:	06-25-2012/06-27-2012	**Drilling Method:**	HW/NW Drive	**Core Barrel:**	NQ - 2.0 in. ID
Boring Location:	Sta. 18+51, 27.3' Rt.	**Casing ID/OD:**	HW-4.0 in. ID/NW-3.0 in. ID	**Water Level *:**	Not Measured
Hammer Efficiency Factor:	0.6	**Hammer Type:**	Automatic☐ Hydraulic☐ Rope & Catheads☒		

Definitions:
D = Split Spoon Sample
MD = Unsuccessful Split Spoon Sample attempt
U = Thin Wall Tube Sample
MU = Unsuccessful Thin Wall Tube Sample attempt
V = Insitu Vane Shear Test
MV = Unsuccessful Insitu Vane Shear Test attempt
R = Rock Core Sample
SSA = Solid Stem Auger
HSA = Hollow Stem Auger
RC = Roller Cone
WOH = weight of 140lb. hammer
WOR = weight of rods
WO1P = Weight of one person
S=u = Insitu Field Vane Shear Strength (psf)
T=v = Pocket Torvane Shear Strength (psf)
q=p = Unconfined Compressive Strength (ksf)
N-uncorrected = Raw field SPT N-value
Hammer Efficiency Factor = Annual Calibration Value
N=E=0 = SPT N-uncorrected corrected for hammer efficiency
N=E=0 = (Hammer Efficiency Factor/60%)*N-uncorrected
S=u=(-i-a-b-) = Lab Vane Shear Strength (psf)
WC = water content, percent
LL = Liquid Limit
PL = Plastic Limit
PI = Plasticity Index
G = Grain Size Analysis
C = Consolidation Test

Depth (ft.)	Sample No.	Pen./Rec. (in.)	Sample Depth (ft.)	Blows (6 in.) Shear Strength (psf) or RQD (%)	N-uncorrected	N=E=0	Casing Blows	Elevation (ft.)	Visual Description and Remarks	Laboratory Testing Results/ AASHTO and Unified Class.
0	*1D	24/4	0.0 - 2.0	1/2/3/3	5	5	2		Light brown, saturated, loose, fine to coarse SAND, trace silt, little fine gravel -ALLUVIAL DEPOSIT-(SW)	G#248334 A-1-b, SW
							6			
							10		Note: * Indicates 3 in. diameter split spoon and 140 lb. hammer used to collect sample.	
							11			
							12			
5	*2D	24/8	5.0 - 7.0	5/4/4/5	8	8	6		Light brown, saturated, loose, fine to coarse SAND, trace silt, little fine gravel -ALLUVIAL DEPOSIT-(SW)	G#248334 A-1-b, SW
							10			
							12			
							13			
							41			
10	3D	24/20	10.0 - 12.0	2/2/3/3	5	5	15		Light gray-brown, saturated, loose, fine SAND, trace medium sand, trace silt, stratified -ALLUVIAL DEPOSIT-(SP)	
							19			
							27			
							58			
							81	581.8	15.0	
15	4D	24/18	15.0 - 17.0	2/2/2/3	4	4	22		Light gray-brown, saturated, very loose, fine SAND, some silt, stratified -GLACIOLACUSTRINE DEPOSIT-(SM)	
							57			
							88			
							108			
							120			
20	5D	24/22	20.0 - 22.0	2/2/3/4	5	5	81		Light gray-brown, saturated, loose, fine SAND, some silt -GLACIOLACUSTRINE DEPOSIT-(SM)	
							75			
							93			
							149			
							165			
25	6D	24/24	25.0 - 27.0	3/2/3/3	5	5	50		Light brown with red-brown partings, saturated, loose, silty fine SAND, trace clay, stratified -GLACIOLACUSTRINE DEPOSIT-(SM)	
							115			
							163			
							148			
							143			
30	7D	24/18	30.0 - 32.0	1/3/4/5	7	7	OPEN		Light gray-brown, saturated, loose, fine SAND, some silt, stratified -GLACIOLACUSTRINE DEPOSIT-(SM)	
									Note: Mud introduced to borehole at 32.0 ft.	
35	8D	24/20	35.0 - 37.0	6/9/11/13	20	20			Light gray-brown with light brown and red-brown, saturated, medium dense, fine SAND, some silt, trace medium sand, stratified -GLACIOLACUSTRINE DEPOSIT-(SM)	
40	9D	24/20	40.0 - 42.0	8/9/13/19	22	22			Light gray-brown with light brown, saturated, medium dense, fine SAND, some silt, stratified -GLACIOLACUSTRINE DEPOSIT-(SM)	
45	10D	24/22	45.0 - 47.0	15/13/13/20	26	26			Light gray-brown, saturated, medium dense, fine SAND, trace silt, stratified -GLACIOLACUSTRINE DEPOSIT-(SP)	
50										

Remarks:

1. As-drilled coordinates of test borings determined by MaineDOT and provided to Haley & Aldrich in NAD 83 Maine 2000 West Zone Coordinate System. As-drilled coordinates related to station and offset information by TranSystems.

Stratification lines represent approximate boundaries between soil types; transitions may be gradual.

** Water level readings have been made at times and under conditions stated. Groundwater fluctuations may occur due to conditions other than those present at the time measurements were made.

Boring No.: BB-RAR-118

Maine Department of Transportation

Soil/Rock Exploration Log
US CUSTOMARY UNITS

Project: Martin Memorial Bridge Replacement
Location: Route 232 - Rumford, Maine
Boring No.: BB-RAR-118
PIN: 15105.00

Driller:	Maine Test Borings	**Elevation (ft.)**	596.8	**Auger ID/OD:**	--
Operator:	B. Enos	**Datum:**	NAVD 88	**Sampler:**	Split Spoon-1.375 in. ID
Logged By:	B. Babcock	**Rig Type:**	CME 45 Skid on Spud Barge	**Hammer Wt./Fall:**	HW/NW-300/24; S-140/30
Date Start/Finish:	06-25-2012/06-27-2012	**Drilling Method:**	HW/NW Drive	**Core Barrel:**	NQ - 2.0 in. ID
Boring Location:	Sta. 18+51, 27.3' Rt.	**Casing ID/OD:**	HW-4.0 in. ID/NW-3.0 in. ID	**Water Level *:**	Not Measured
Hammer Efficiency Factor:	0.6	**Hammer Type:**	Automatic☐ Hydraulic☐ Rope & Catheads☒		

Definitions:
D = Split Spoon Sample
MD = Unsuccessful Split Spoon Sample attempt
U = Thin Wall Tube Sample
MU = Unsuccessful Thin Wall Tube Sample attempt
V = Insitu Vane Shear Test
MV = Unsuccessful Insitu Vane Shear Test attempt
R = Rock Core Sample
SSA = Solid Stem Auger
HSA = Hollow Stem Auger
RC = Roller Cone
WOH = weight of 140lb. hammer
WOR = weight of rods
WO1P = Weight of one person
S=u = Insitu Field Vane Shear Strength (psf)
T=v = Pocket Torvane Shear Strength (psf)
q=p = Unconfined Compressive Strength (ksf)
N-uncorrected = Raw field SPT N-value
Hammer Efficiency Factor = Annual Calibration Value
N=E=0 = SPT N-uncorrected corrected for hammer efficiency
N=E=0 = (Hammer Efficiency Factor/60%)*N-uncorrected
S=u=(-i-a-b-) = Lab Vane Shear Strength (psf)
WC = water content, percent
LL = Liquid Limit
PL = Plastic Limit
PI = Plasticity Index
G = Grain Size Analysis
C = Consolidation Test

Depth (ft.)	Sample No.	Pen./Rec. (in.)	Sample Depth (ft.)	Blows (6 in.) Shear Strength (psf) or RQD (%)	N-uncorrected	N=E=0	Casing Blows	Elevation (ft.)	Visual Description and Remarks	Laboratory Testing Results/ AASHTO and Unified Class.
50	11D	24/18	50.0 - 52.0	11/11/13/24	24	24	OPEN		Light gray-brown with light brown, saturated, medium dense, fine to medium SAND, stratified -GLACIOLACUSTRINE DEPOSIT-(SP)	
55	12D	24/20	55.0 - 57.0	11/14/16/13	30	30			Light brown, saturated, medium dense, fine SAND, little silt, stratified -GLACIOLACUSTRINE DEPOSIT-(SM)	
60	13D	24/16	60.0 - 62.0	9/10/12/17	22	22			Gray-brown to orange-brown, saturated, medium dense, fine SAND, trace silt, stratified -GLACIOLACUSTRINE DEPOSIT-(SP-SM)	
65	14D	8/6	65.0 - 65.7	12/100(2.0")			17	531.8	65.0	
							14	531.1	Brown with red-brown, saturated, very dense, fine to medium SAND, trace silt, trace gravel in tip of spoon, stratified -GLACIOLACUSTRINE DEPOSIT-(SW) Note: HW casing advanced through open borehole to 64.0 ft. Advanced borehole to 70.0 ft through boulder (65.7-67.0 ft), cobbles/ gravel (67.0-70.0 ft).	
							14	529.8	65.7 -BOULDER- 67.0	
							42		Gravel/cobbles -PROBABLE GLACIAL TILL-	
70	MD	0/0	70.0 - 70.0	50(0.0")			120(6.0")	526.8	70.0 No recovery. Approximately 2.0 ft blow-in in borehole prior to sampling attempt at 70.0 ft. Gray gravel in tip of spoon. Note: Telescope NW casing to 66.1 ft following failed sample attempt at 70.0 ft. End of drilling mud use. Note: Advanced borehole to 72.4 ft with rollerbit. Drill action suggests bedrock. Top of Bedrock at El. 526.8 Light purple-gray with light green, fine to coarse grained, micaceous GNEISS. Hard to moderately hard, very slightly weathered. Joints dipping at low angles, close, rough, stepped, discolored to very slightly weathered, open. Quartzose veins from approximately 75.3 to 76.0 ft and 77.0 to 77.4 ft. Foliation dipping at low to moderate angles. Rock Mass Quality=Fair Recovery=100% -LITTLETON FORMATION- R1 Core Times (min:sec): 72.4-73.4' (3:52); 73.4-74.4' (2:33); 74.4-75.4' (2:45); 75.4-76.4' (1:55); 76.4-77.4' (2:05)	
	R1	60/60	72.4 - 77.4	RQD = 65%						
75										
	R2	60/60	77.4 - 82.4	RQD = 40%						
80								514.4	Light green with light purple-gray, coarse grained, micaceous GNEISS. Hard, very slightly weathered. Joints dipping at low angles, close to moderately close, rough, stepped, discolored, open. Foliation dipping at low to moderate angles where discernible. Approximately 75% of fractures due to drill breaks, mineralogy. Rock Mass Quality=Poor Recovery=100% -LITTLETON FORMATION- R2 Core Times (min:sec): 77.4-78.4' (2:13); 78.4-79.4' (1:37); 79.4-80.4' (1:43); 80.4-81.4' (1:38); 81.4-82.4' (2:11) 82.4	
85									Bottom of Exploration at 82.4 feet below ground surface.	
90										
95										
100										

Remarks:

1. As-drilled coordinates of test borings determined by MaineDOT and provided to Haley & Aldrich in NAD 83 Maine 2000 West Zone Coordinate System. As-drilled coordinates related to station and offset information by TranSystems.

Stratification lines represent approximate boundaries between soil types; transitions may be gradual.

** Water level readings have been made at times and under conditions stated. Groundwater fluctuations may occur due to conditions other than those present at the time measurements were made.

Boring No.: BB-RAR-118

HALEY & ALDRICH

STATE OF MAINE
DEPARTMENT OF TRANSPORTATION

BH-1510(500)X

WIN 15105.00

BRIDGE PLANS

BRIDGE NO. 3248

STATE OF MAINE WAYNE A. CHADBOURNE No. 10620 LICENSED PROFESSIONAL ENGINEER

		SIGNATURE	
		10620	P.E. NUMBER
		5/29/2013	DATE

		BY	DATE
PROJ. MANAGER	S. BODGE		
DESIGN-DETAILED	B. STEINERT	B. STEINERT	02/2013
CHECKED-REVIEWED	W. CHADBOURNE	W. CHADBOURNE	02/2013
DESIGN2-DETAILED2			
DESIGN3-DETAILED3			
REVISIONS 1			
REVISIONS 2			
REVISIONS 3			
REVISIONS 4			
FIELD CHANGES			

MARTIN MEMORIAL BRIDGE
ANDROSCOGGIN RIVER
RUMFORD OXFORD COUNTY

BORING LOGS

SHEET NUMBER
58
OF 95

Filename: ...\0030\Road\059_BoringLogs.dgn Division: BRIDGE Username: T SANDELL Date:5/29/2013

Maine Department of Transportation
Soil/Rock Exploration Log
US CUSTOMARY UNITS

Project: Martin Memorial Bridge Replacement
Location: Route 232 - Rumford, Maine
Boring No.: BB-RAR-119
PIN: 15105.00

Driller:	Maine Test Borings	**Elevation (ft.)**	599.6	**Auger ID/OD:**	--
Operator:	B. Enos	**Datum:**	NAVD 88	**Sampler:**	Split Spoon-1.375 in. ID
Logged By:	B. Babcock/B. Steinert	**Rig Type:**	CME 45 Skid on Spud Barge	**Hammer Wt./Fall:**	HW/NW-300/16; S-140/30
Date Start/Finish:	06-18-2012/06-20-2012	**Drilling Method:**	HW/NW Drive	**Core Barrel:**	NQ - 2.0 in. ID
Boring Location:	Sta. 19+60, 24.7' Lt.	**Casing ID/OD:**	HW/NW - 1.333 in. ID	**Water Level*:**	Not Measured
Hammer Efficiency Factor: 0.6		**Hammer Type:**	Automatic☐ Hydraulic☐ Rope & Cathead☒		

Definitions:
D = Split Spoon Sample
MD = Unsuccessful Split Spoon Sample attempt
U = Thin Wall Tube Sample
MU = Unsuccessful Thin Wall Tube Sample attempt
V = Insitu Vane Shear Test
MV = Unsuccessful Insitu Vane Shear Test attempt
R = Rock Core Sample
SSA = Solid Stem Auger
HSA = Hollow Stem Auger
RC = Roller Cone
WOH = weight of 140lb. hammer
WOR = weight of rods
WO1P = Weight of one person
S=u=(-1-a-b-)= Insitu Field Vane Shear Strength (psf)
T=v = Pocket Torvane Shear Strength (psf)
q=p = Unconfined Compressive Strength (ksf)
N-uncorrected = Raw field SPT N-value
Hammer Efficiency Factor = Annual Calibration Value
N=6-0 = SPT N-uncorrected corrected for hammer efficiency
N=6-0 = (Hammer Efficiency Factor/60%)*N-uncorrected
S=u=(-1-a-b-)= Lab Vane Shear Strength (psf)
WC = water content, percent
LL = Liquid Limit
PL = Plastic Limit
PI = Plasticity Index
G = Grain Size Analysis
C = Consolidation Test

Sample Information

Depth (ft.)	Sample No.	Pen./Rec. (in.)	Sample Depth (ft.)	Blows (6 in.) Shear Strength (psf) or RQD (%)	N-uncorrected	N=6-0	Casing Blows	Elevation (ft.)	Graphic Log	Visual Description and Remarks	Laboratory Testing Results/ AASHTO and Unified Class.
0	1D*	24/6	0.0 - 2.0	WOH/WOH/1/2	1	1	1			Gray-brown, saturated, very loose, fine to medium SAND, trace leaves, plant fibers, sticks -ALLUVIAL DEPOSIT-(SP)	
							3				
							6			Note: * indicates 3 in. spoon and 140 lb. hammer used to collect sample.	
	2D*	24/10	3.0 - 5.0	14/12/10/11	22	22	32			Gray-brown, saturated, medium dense, fine SAND, some silt -ALLUVIAL DEPOSIT-(SM)	
5							30				
							31			Note: Gravel layer encountered from approximately 6 to 8 ft based on drill action.	
							54				
							81				
	3D	24/20	8.0 - 10.0	2/3/4/5	7	7	20			Gray-brown, moist, loose, fine SAND, trace silt -ALLUVIAL DEPOSIT-(SP)	
10							28				
							54			Note: Mix drilling mud prior to washing out from 8 to 13 ft.	
							89				
							107				
	4D	24/18	13.0 - 15.0	3/3/4/5	7	7	OPEN			Gray-brown, moist, loose, fine SAND, trace silt -ALLUVIAL DEPOSIT-(SP)	
15											
	5D	24/18	18.0 - 20.0	3/5/6/6	11	11				Gray-brown, moist, medium dense, fine SAND, trace silt -ALLUVIAL DEPOSIT-(SP)	
20											
	6D	24/18	23.0 - 25.0	3/4/5/5	9	9				Gray-brown, moist, loose, fine SAND, trace silt -ALLUVIAL DEPOSIT-(SP)	
25							OPEN				
	7D	24/20	28.0 - 30.0	4/3/4/5	7	7				Gray-brown, saturated, loose, fine SAND, trace silt -ALLUVIAL DEPOSIT-(SP)	
30											
	8D	24/20	33.0 - 35.0	5/3/3/2	6	6				Gray-brown, saturated, loose, fine SAND, trace silt -ALLUVIAL DEPOSIT-(SP)	
35											
								563.1		36.5	
	9D	24/24	38.0 - 40.0	6/5/12/9	17	17				Red-brown to red, saturated, medium dense, fine to medium SAND, little gravel, trace silt -GLACIOFLUVIAL DEPOSIT-(SW)	
								560.6		39.0	
40										Gray-brown to red-brown, saturated, medium dense, fine SAND, some gravel, some silt, trace medium to coarse sand -GLACIOFLUVIAL DEPOSIT-(SM)	
	10D	24/10	43.0 - 45.0	6/7/18/23	25	25				Gray-brown with red-brown, saturated, medium dense, fine to medium SAND, little silt, trace coarse sand, trace gravel, stratified -GLACIOFLUVIAL DEPOSIT-(SM)	
45											
										Note: Frequent zones of gravel between approximately 45 and 48 ft.	
	11D	24/12	47.5 - 49.5	15/16/23/22	39	39				Gray-brown with red-brown, saturated, dense, fine to medium SAND, trace coarse sand, little silt, trace gravel, stratified -GLACIOFLUVIAL DEPOSIT-(SM)	
							83				
50							85				

Remarks:

1. As-drilled coordinates of test borings determined by MaineDOT and provided to Haley & Aldrich in NAD 83 Maine 2000 West Zone Coordinate System. As-drilled coordinates related to station and offset information by TranSystems.

Stratification lines represent approximate boundaries between soil types; transitions may be gradual.

* Water level readings have been made at times and under conditions stated. Groundwater fluctuations may occur due to conditions other than those present at the time measurements were made.

Page 1 of 3
Boring No.: BB-RAR-119

Maine Department of Transportation
Soil/Rock Exploration Log
US CUSTOMARY UNITS

Project: Martin Memorial Bridge Replacement
Location: Route 232 - Rumford, Maine
Boring No.: BB-RAR-119
PIN: 15105.00

Driller:	Maine Test Borings	**Elevation (ft.)**	599.6	**Auger ID/OD:**	--
Operator:	B. Enos	**Datum:**	NAVD 88	**Sampler:**	Split Spoon-1.375 in. ID
Logged By:	B. Babcock/B. Steinert	**Rig Type:**	CME 45 Skid on Spud Barge	**Hammer Wt./Fall:**	HW/NW-300/16; S-140/30
Date Start/Finish:	06-18-2012/06-20-2012	**Drilling Method:**	HW/NW Drive	**Core Barrel:**	NQ - 2.0 in. ID
Boring Location:	Sta. 19+60, 24.7' Lt.	**Casing ID/OD:**	HW/NW - 1.333 in. ID	**Water Level*:**	Not Measured
Hammer Efficiency Factor: 0.6		**Hammer Type:**	Automatic☐ Hydraulic☐ Rope & Cathead☒		

Definitions:
D = Split Spoon Sample
MD = Unsuccessful Split Spoon Sample attempt
U = Thin Wall Tube Sample
MU = Unsuccessful Thin Wall Tube Sample attempt
V = Insitu Vane Shear Test
MV = Unsuccessful Insitu Vane Shear Test attempt
R = Rock Core Sample
SSA = Solid Stem Auger
HSA = Hollow Stem Auger
RC = Roller Cone
WOH = weight of 140lb. hammer
WOR = weight of rods
WO1P = Weight of one person
S=u=(-1-a-b-)= Insitu Field Vane Shear Strength (psf)
T=v = Pocket Torvane Shear Strength (psf)
q=p = Unconfined Compressive Strength (ksf)
N-uncorrected = Raw field SPT N-value
Hammer Efficiency Factor = Annual Calibration Value
N=6-0 = SPT N-uncorrected corrected for hammer efficiency
N=6-0 = (Hammer Efficiency Factor/60%)*N-uncorrected
S=u=(-1-a-b-)= Lab Vane Shear Strength (psf)
WC = water content, percent
LL = Liquid Limit
PL = Plastic Limit
PI = Plasticity Index
G = Grain Size Analysis
C = Consolidation Test

Sample Information

Depth (ft.)	Sample No.	Pen./Rec. (in.)	Sample Depth (ft.)	Blows (6 in.) Shear Strength (psf) or RQD (%)	N-uncorrected	N=6-0	Casing Blows	Elevation (ft.)	Graphic Log	Visual Description and Remarks	Laboratory Testing Results/ AASHTO and Unified Class.
50							46				
							60			Note: Approximately 2.5 ft of soil in casing after washout. Wash out again and float rods.	
							65				
	12D	12/12	53.0 - 54.0	9/65			11			Gray-brown to red-brown, moist, very dense, medium SAND, trace fine sand -GLACIOFLUVIAL DEPOSIT-(SP)	
55							166				
							27			Note: Split spoon refusal at approximately 54.0 ft. Casing refusal at approximately 55.0 ft. Washed ahead and drive to 58.0 ft.	
							41				
							106(7.0")				
	13D	24/15	58.0 - 60.0	7/132/51(3.0")			25			Gray-brown to red-brown, moist, loose to very dense, medium SAND, trace fine sand -GLACIOFLUVIAL DEPOSIT-(SP)	
60							125				
							325				
							128(2.0")	538.6		61.0	
	14D	24/19	62.5 - 64.5	32/61/93/38(1.0")	154	154	DRIVE			Gray-brown to gray, moist, very dense, fine SAND, trace silt to medium sand, trace fine sand and silt, alternating layers -GLACIOFLUVIAL DEPOSIT-(SP)	
65											
								533.6		66.0	
	15D	24/16	68.0 - 70.0	80/104/96(5.0")			OPEN			Gray, moist, very dense, fine SAND, trace silt and gravel, well bonded -GLACIAL TILL-(SW)	
70											
	16D	16/16	73.0 - 74.3	60/87/100(4.0")						Gray, moist, very dense, fine to medium SAND, trace silt, coarse sand and gravel, well bonded -GLACIAL TILL-(SW)	
75							OPEN			Note: Encountered frequent gravel layers from approximately 75.0 to 78.0 ft.	
	17D	16/16	78.0 - 79.3	34/50/75(4.0")			13			Gray, wet, dense to very dense, medium to coarse SAND, trace silt, fine sand and gravel -GLACIAL TILL-(SW)	
80							17				
							25			Note: Driller washing ahead before driving casing from approximately 79.3 to 88.6 ft.	
							52				
							250				
	18D	10/8	83.0 - 83.8	56/100(3.0")			24			Gray, moist, very dense, fine to medium SAND, little silt, trace gravel, trace coarse sand, trace clay, well bonded in-situ -GLACIAL TILL-(SM)	
85							28				
							40			Note: Drill action indicates gravel between approximately 83.0 and 87.0 ft.	
							75				
							150				
	19D	3/3	88.0 - 88.3	257(3.0")			300(7")	511.3		Green-gray, wet, very dense, fine to coarse SAND, little fine to coarse gravel, little silt, approximately 50% weathered bedrock, well bonded in-situ -GLACIAL TILL-(SM)	
	R1	58/32	88.9 - 93.7	RQD = 55%						88.3	
90										Top of Bedrock at El. 511.3 Light green, coarse grained, quartz, mica, PEGMATITE. Very hard, very slightly weathered. Joints dipping at low to moderate angles, close, rough, stepped, open, discolored. Note: Wash color changes from milky white to dark gray at approximately 93.0 ft.	
								506.6		93.0	
	R2	50/42	93.7 - 97.9	RQD = 84%						Dark purple-gray, fine to coarse grained, micaceous GNEISS. Very hard, slightly weathered. Joints dipping at moderate angles, close, rough, stepped, open, discolored to slightly weathered. Foliation dipping at moderate angles. Rock Mass Quality=Fair Recovery=100% -LITTLETON FORMATION- R1 Core Times (min:sec): 88.9-90.9' (3:40); 90.9-91.9 (2:38); 91.9-92.9' (2:43); 92.9-93.9' (2:56); 93.9-94.9' (3:11) Note: Bottom 10 in. of recovery captured during R2	
95								501.8		Dark purple-gray, fine to coarse grained, micaceous GNEISS. Very hard, very slightly weathered. Joints dipping at moderate angles, close to moderately close, rough, stepped to planar, open, discolored to slightly weathered with minimal silt infilling. Foliation dipping at	
100											

Remarks:

1. As-drilled coordinates of test borings determined by MaineDOT and provided to Haley & Aldrich in NAD 83 Maine 2000 West Zone Coordinate System. As-drilled coordinates related to station and offset information by TranSystems.

Stratification lines represent approximate boundaries between soil types; transitions may be gradual.

* Water level readings have been made at times and under conditions stated. Groundwater fluctuations may occur due to conditions other than those present at the time measurements were made.

Page 2 of 3
Boring No.: BB-RAR-119

Maine Department of Transportation
Soil/Rock Exploration Log
US CUSTOMARY UNITS

Project: Martin Memorial Bridge Replacement
Location: Route 232 - Rumford, Maine
Boring No.: BB-RAR-119
PIN: 15105.00

Driller:	Maine Test Borings	**Elevation (ft.)**	599.6	**Auger ID/OD:**	--
Operator:	B. Enos	**Datum:**	NAVD 88	**Sampler:**	Split Spoon-1.375 in. ID
Logged By:	B. Babcock/B. Steinert	**Rig Type:**	CME 45 Skid on Spud Barge	**Hammer Wt./Fall:**	HW/NW-300/16; S-140/30
Date Start/Finish:	06-18-2012/06-20-2012	**Drilling Method:**	HW/NW Drive	**Core Barrel:**	NQ - 2.0 in. ID
Boring Location:	Sta. 19+60, 24.7' Lt.	**Casing ID/OD:**	HW/NW - 1.333 in. ID	**Water Level*:**	Not Measured
Hammer Efficiency Factor: 0.6		**Hammer Type:**	Automatic☐ Hydraulic☐ Rope & Cathead☒		

Definitions:
D = Split Spoon Sample
MD = Unsuccessful Split Spoon Sample attempt
U = Thin Wall Tube Sample
MU = Unsuccessful Thin Wall Tube Sample attempt
V = Insitu Vane Shear Test
MV = Unsuccessful Insitu Vane Shear Test attempt
R = Rock Core Sample
SSA = Solid Stem Auger
HSA = Hollow Stem Auger
RC = Roller Cone
WOH = weight of 140lb. hammer
WOR = weight of rods
WO1P = Weight of one person
S=u=(-1-a-b-)= Insitu Field Vane Shear Strength (psf)
T=v = Pocket Torvane Shear Strength (psf)
q=p = Unconfined Compressive Strength (ksf)
N-uncorrected = Raw field SPT N-value
Hammer Efficiency Factor = Annual Calibration Value
N=6-0 = SPT N-uncorrected corrected for hammer efficiency
N=6-0 = (Hammer Efficiency Factor/60%)*N-uncorrected
S=u=(-1-a-b-)= Lab Vane Shear Strength (psf)
WC = water content, percent
LL = Liquid Limit
PL = Plastic Limit
PI = Plasticity Index
G = Grain Size Analysis
C = Consolidation Test

Sample Information

Depth (ft.)	Sample No.	Pen./Rec. (in.)	Sample Depth (ft.)	Blows (6 in.) Shear Strength (psf) or RQD (%)	N-uncorrected	N=6-0	Casing Blows	Elevation (ft.)	Graphic Log	Visual Description and Remarks	Laboratory Testing Results/ AASHTO and Unified Class.
100										moderate angles Rock Mass Quality=Fair Recovery=100% -LITTLETON FORMATION- R2 Core Times (min:sec): 93.7-94.7' (1:56); 94.7-95.7' (1:51); 95.7-96.7' (1:52); 96.7-97.7' (2:05); 97.7-97.8' (1:00/0.1')	
										97.8	
										Bottom of Exploration at 97.8 feet below ground surface.	
105											
110											
115											
120											
125											

Remarks:

1. As-drilled coordinates of test borings determined by MaineDOT and provided to Haley & Aldrich in NAD 83 Maine 2000 West Zone Coordinate System. As-drilled coordinates related to station and offset information by TranSystems.

Stratification lines represent approximate boundaries between soil types; transitions may be gradual.

* Water level readings have been made at times and under conditions stated. Groundwater fluctuations may occur due to conditions other than those present at the time measurements were made.

Page 3 of 3
Boring No.: BB-RAR-119

HALEY & ALDRICH

STATE OF MAINE
DEPARTMENT OF TRANSPORTATION

BH-1510(500)X

WIN 15105.00

BRIDGE NO. 3248

BRIDGE PLANS

STATE OF MAINE
WAYNE A. CHADBOURNE
No. 10620
LICENSED PROFESSIONAL ENGINEER

		SIGNATURE	
		10620	P.E. NUMBER
		5/29/2013	DATE
PROJ. MANAGER	S. BODGE	BY	DATE
DESIGN-DETAILED	B. STEINERT	B. STEINERT	02/2013
CHECKED-REVIEWED	W. CHADBOURNE	W. CHADBOURNE	02/2013
DESIGN2-DETAILED2			
DESIGN3-DETAILED3			
REVISIONS 1			
REVISIONS 2			
REVISIONS 3			
REVISIONS 4			
FIELD CHANGES			

MARTIN MEMORIAL BRIDGE
ANDROSCOGGIN RIVER
RUMFORD OXFORD COUNTY

BORING LOGS

SHEET NUMBER
59
OF 95

Filename: ...\0030\Road\060_Boring_Logs.dgn Division: BRIDGE Username: T SANDELL Date:5/29/2013

Maine Department of Transportation
Soil/Rock Exploration Log
US CUSTOMARY UNITS

Project: Martin Memorial Bridge Replacement
Location: Route 232 - Rumford, Maine
Boring No.: BB-RAR-120
PIN: 15105.00

Driller:	Maine Test Borings	**Elevation (ft.)**	600.1	**Auger ID/OD:**	--
Operator:	B. Enos	**Datum:**	NAVD 88	**Sampler:**	Split Spoon-1.375 in. ID
Logged By:	B. Babcock	**Rig Type:**	CME 45 Skid on Spud Barge	**Hammer Wt./Fall:**	HW/NW-300/24; S-140/30
Date Start/Finish:	06-25-2012/06-27-2012	**Drilling Method:**	HW/NW Drive	**Core Barrel:**	NQ - 2.0 in. ID
Boring Location:	Sta. 19+42, 22.3' Rt.	**Casing ID/OD:**	HW-4.0 in. ID/NW-3.0 in. ID	**Water Level*:**	Not Measured
Hammer Efficiency Factor: 0.6		**Hammer Type:**	Automatic☐ Hydraulic☐ Rope & Cathead☒		

Definitions:
D = Split Spoon Sample
MD = Unsuccessful Split Spoon Sample attempt
U = Thin Wall Tube Sample
MU = Unsuccessful Thin Wall Tube Sample attempt
V = Insitu Vane Shear Test
MV = Unsuccessful Insitu Vane Shear Test attempt
R = Rock Core Sample
SSA = Solid Stem Auger
HSA = Hollow Stem Auger
RC = Roller Cone
WOH = weight of 140lb. hammer
WOR = weight of rods
WO1P = Weight of one person
S=u=(~f~a~b~) = Insitu Field Vane Shear Strength (psf)
T=v = Pocket Torvane Shear Strength (psf)
q=p = Unconfined Compressive Strength (ksf)
N-uncorrected = Raw field SPT N-value
Hammer Efficiency Factor = Annual Calibration Value
N-6-0 = SPT N-uncorrected corrected for hammer efficiency
N-6-0 = (Hammer Efficiency Factor/60%)*N-uncorrected
S=u=(~f~a~b~) = Lab Vane Shear Strength (psf)
WC = water content, percent
LL = Liquid Limit
PL = Plastic Limit
PI = Plasticity Index
G = Grain Size Analysis
C = Consolidation Test

Sample Information

Depth (ft.)	Sample No.	Pen./Rec. (in.)	Sample Depth (ft.)	Blows (6 in.) Shear Strength (psf) or RQD (%)	N-uncorrected	N-6-0	Casing Blows	Elevation (ft.)	Visual Description and Remarks	Laboratory Testing Results/ AASHTO and Unified Class.
0	*1D	24/4	0.0 - 2.0	WOR/WOH/WOH/1	0	0	PUSH		Gray-brown, saturated, very loose, fine SAND, trace medium to coarse sand, some silt, trace fine gravel, trace plant fibers, faint organic odor -ALLUVIAL DEPOSIT-(SM) Note: * Indicates 3 in. spoon, 140 lb. hammer used to collect sample.	G#248335 A-2-4, SM
	*2D	24/14	4.0 - 6.0	15/13/8/15	21	21	25		Light brown, saturated, medium dense, fine SAND, trace medium to coarse sand, trace fine gravel grading to fine sand, some silt -ALLUVIAL DEPOSIT-(SM)	G#248335 A-2-4, SM
5	3D	24/18	9.0 - 11.0	4/3/4/4	7	7	12		Light brown, saturated, loose, fine SAND, trace silt, trace medium sand -ALLUVIAL DEPOSIT-(SP-SM)	
10	4D	24/16	14.0 - 16.0	5/3/5/5	8	8	26		Light brown, saturated, loose, fine SAND, trace silt, trace medium sand -ALLUVIAL DEPOSIT-(SP)	G#248336 A-3, SP WC=24.8% GTX#121194 DS=12 FA=32.5°o c=264 psf
									Note: Drilling mud introduced to borehole at 19.0 ft.	
15	5D	24/18	19.0 - 21.0	4/3/4/4	7	7	OPEN		Light brown, saturated, loose, fine SAND, trace silt, trace medium sand -ALLUVIAL DEPOSIT-(SP)	G#248336 A-3, SP WC=24.8% GTX#121194 DS=12 FA=32.5°o c=264 psf
20	6D	24/14	24.0 - 26.0	5/5/7/9	12	12	OPEN		Light gray-brown, saturated, medium dense, fine SAND, trace medium sand, little silt -ALLUVIAL DEPOSIT-(SM)	G#248337 A-2-4, SM
25	7D	24/14	29.0 - 31.0	5/8/8/8	16	16			Light gray-brown, saturated, medium dense, fine SAND, trace medium sand, little silt -ALLUVIAL DEPOSIT-(SM)	G#248337 A-2-4, SM
30	8D	24/20	34.0 - 36.0	5/5/5/7	10	10			Light brown, saturated, silty fine SAND -GLACIOLACUSTRINE DEPOSIT-(SM)	G#248338 A-4, SM WC=28.8% GTX#121194 DS=13 FA=34.7°o c=156 psf
35	9D	24/16	39.0 - 41.0	9/10/10/12	20	20			Light brown with partings and pockets of red- brown, saturated, medium dense, silty fine SAND, stratified -GLACIOLACUSTRINE DEPOSIT-(SM)	G#248338 A-4, SM WC=28.8% GTX#121194 DS=13 FA=34.7°o c=156 psf
40	10D	24/14	44.0 - 46.0	4/2/3/9	5	5			Light brown with red-brown, saturated, loose, sandy SILT, frequent partings of silt and fine sand, frequent silt laminae, stratified -GLACIOLACUSTRINE DEPOSIT-(ML)	G#248339 A-4, ML
45	11D	24/24	49.0 - 51.0	11/12/17/20	29	29		551.1	49.0 Light brown to red-brown, saturated, medium dense, sandy SILT to	G#248339 A-4, ML
50										

Remarks:
1. As-drilled coordinates of test borings determined by MaineDOT and provided to Haley & Aldrich in NAD 83 Maine 2000 West Zone Coordinate System. As-drilled coordinates related to station and offset information by TranSystems.
2. DS-1 = direct shear test no.; FA = friction angle; c = cohesion; psf = pounds per square foot.

Stratification lines represent approximate boundaries between soil types; transitions may be gradual.
* Water level readings have been made at times and under conditions stated. Groundwater fluctuations may occur due to conditions other than those present at the time measurements were made.

Page 2 of 5
Boring No.: BB-RAR-120

Maine Department of Transportation
Soil/Rock Exploration Log
US CUSTOMARY UNITS

Project: Martin Memorial Bridge Replacement
Location: Route 232 - Rumford, Maine
Boring No.: BB-RAR-120
PIN: 15105.00

Driller:	Maine Test Borings	**Elevation (ft.)**	600.1	**Auger ID/OD:**	--
Operator:	B. Enos	**Datum:**	NAVD 88	**Sampler:**	Split Spoon-1.375 in. ID
Logged By:	B. Babcock	**Rig Type:**	CME 45 Skid on Spud Barge	**Hammer Wt./Fall:**	HW/NW-300/24; S-140/30
Date Start/Finish:	06-25-2012/06-27-2012	**Drilling Method:**	HW/NW Drive	**Core Barrel:**	NQ - 2.0 in. ID
Boring Location:	Sta. 19+42, 22.3' Rt.	**Casing ID/OD:**	HW-4.0 in. ID/NW-3.0 in. ID	**Water Level*:**	Not Measured
Hammer Efficiency Factor: 0.6		**Hammer Type:**	Automatic☐ Hydraulic☐ Rope & Cathead☒		

Definitions:
D = Split Spoon Sample
MD = Unsuccessful Split Spoon Sample attempt
U = Thin Wall Tube Sample
MU = Unsuccessful Thin Wall Tube Sample attempt
V = Insitu Vane Shear Test
MV = Unsuccessful Insitu Vane Shear Test attempt
R = Rock Core Sample
SSA = Solid Stem Auger
HSA = Hollow Stem Auger
RC = Roller Cone
WOH = weight of 140lb. hammer
WOR = weight of rods
WO1P = Weight of one person
S=u=(~f~a~b~) = Insitu Field Vane Shear Strength (psf)
T=v = Pocket Torvane Shear Strength (psf)
q=p = Unconfined Compressive Strength (ksf)
N-uncorrected = Raw field SPT N-value
Hammer Efficiency Factor = Annual Calibration Value
N-6-0 = SPT N-uncorrected corrected for hammer efficiency
N-6-0 = (Hammer Efficiency Factor/60%)*N-uncorrected
S=u=(~f~a~b~) = Lab Vane Shear Strength (psf)
WC = water content, percent
LL = Liquid Limit
PL = Plastic Limit
PI = Plasticity Index
G = Grain Size Analysis
C = Consolidation Test

Sample Information

Depth (ft.)	Sample No.	Pen./Rec. (in.)	Sample Depth (ft.)	Blows (6 in.) Shear Strength (psf) or RQD (%)	N-uncorrected	N-6-0	Casing Blows	Elevation (ft.)	Visual Description and Remarks	Laboratory Testing Results/ AASHTO and Unified Class.
50							OPEN	550.1	silty fine SAND, stratified -GLACIOLACUSTRINE DEPOSIT-(ML) 50.0 -GLACIOFLUVIAL DEPOSIT- Note: Drill action indicates gravel between approximately 51.0 and 54.0 ft.	
	12D	24/20	54.0 - 56.0	8/11/12/16	23	23		546.1	54.0 Light brown with red-brown, saturated, medium dense, silty fine to medium SAND, trace coarse sand and fine gravel, stratified -GLACIOLACUSTRINE DEPOSIT-(SM) Note: HW casing driven through open hole to 54.0 ft on 6/21/12.	G#248340 A-4, SM WC=17.4% GTX#121194 DS-14 FA=28.9°o c=431 psf
55	13D	24/20	59.0 - 61.0	4/5/9/20	14	14		538.1	Light-brown with red-brown, saturated, medium dense, silty fine to medium SAND, trace coarse sand and gravel, stratified, with pockets of slightly plastic silt and clay -GLACIOLACUSTRINE DEPOSIT-(SM) 62.0 Note: Drill action indicates gravel between approximately 62.0 and 64.0 ft. Probable stratum change.	G#248340 A-4, SM WC=17.4% GTX#121194 DS-14 FA=28.9°o c=431 psf
60	14D	24/16	64.0 - 66.0	9/17/21/26	38	38			Gray-brown with red and gray, saturated, dense, fine to coarse SAND, trace gravel, stratified -GLACIOFLUVIAL DEPOSIT-(SW) Note: Driller overshot sample depth at 69.0 ft.	
65									Note: Drill wash changes from brown to gray at approximately 72.5 ft. Gravel/cobbles encountered from approximately 72.5 to 74.0 ft.	
70	15D	11/6	74.0 - 74.9	52/100(5.0")			OPEN		Gray, wet, very dense, fine SAND, little silt, trace medium sand -GLACIOFLUVIAL DEPOSIT-(SM) Note: Drill action indicates gravel/cobbles between approximately 74.9 and 79.0 ft.	
75	16D	12/6	79.0 - 80.0	78/100				521.1	79.0 Gray, wet, very dense, fine to coarse SAND, trace silt, trace gravel, bonded -GLACIAL TILL-(SW-SM)	
80	MD	6/0	84.0 - 84.5	100			60		No recovery. Residue in spoon similar to above, possible pushed gravel. Note: Drill action indicates stratum change at approximately 86.0 ft.	
85							80	514.1	86.0 Note: Drill action and cuttings indicate light green-gray GRANULITE from 86.0-88.0 ft. Drill action and casing advancement indicate -WEATHERED BEDROCK-	
							24			
							28	512.1	88.0 Top of Bedrock at EL. 512.1	
							30		Dark purple-gray, fine to coarse grained, micaceous GNEISS. Soft to hard, severely to moderately weathered. Joints dipping at low angles, close, rough to smooth, planar, slightly to severely weathered with decomposed rock infilling, open. Foliation dipping at low angles. Rock Mass Quality=Very Poor Recovery=100% -LITTLETON FORMATION- R1 Core Times (min:sec): 89.0-90.0' (6:10); 90.0-91.0' (3:11); 91.0-92.0' (3:09) Dark green-gray, fine to coarse grained, micaceous GNEISS. Soft, moderately severe to severely weathered. Joints dipping at low angles where discernible, very close, rough, planar, moderately weathered to decomposed. Probable zone of lost recovery is 94.0 to 96.7 ft based on drill action. Borehole open to 96.7 ft at completion of run. Rock Mass Quality=Very Poor Recovery=54% -LITTLETON FORMATION- R2 Core Times (min:sec): 92.0-93.0' (3:28); 93.0-94.0' (2:37); 94.0-95.0' (1:35); 95.0-96.0' (1:55); 96.0-96.7' (1:36) Dark green-gray to light green-gray, fine to coarse grained, micaceous GNEISS, very soft, severely weathered. Joints indiscernible due to fractured/decomposed nature of recovery.	
90	R1	36/36	89.0 - 92.0	RQD = 12%						
	R2	56/30	92.0 - 96.7	RQD = 0%						
95	R3	48/24	96.7 - 100.7	RQD = 0%						
100										

Remarks:
1. As-drilled coordinates of test borings determined by MaineDOT and provided to Haley & Aldrich in NAD 83 Maine 2000 West Zone Coordinate System. As-drilled coordinates related to station and offset information by TranSystems.
2. DS-1 = direct shear test no.; FA = friction angle; c = cohesion; psf = pounds per square foot.

Stratification lines represent approximate boundaries between soil types; transitions may be gradual.
* Water level readings have been made at times and under conditions stated. Groundwater fluctuations may occur due to conditions other than those present at the time measurements were made.

Page 4 of 5
Boring No.: BB-RAR-120

Maine Department of Transportation
Soil/Rock Exploration Log
US CUSTOMARY UNITS

Project: Martin Memorial Bridge Replacement
Location: Route 232 - Rumford, Maine
Boring No.: BB-RAR-120
PIN: 15105.00

Driller:	Maine Test Borings	**Elevation (ft.)**	600.1	**Auger ID/OD:**	--
Operator:	B. Enos	**Datum:**	NAVD 88	**Sampler:**	Split Spoon-1.375 in. ID
Logged By:	B. Babcock	**Rig Type:**	CME 45 Skid on Spud Barge	**Hammer Wt./Fall:**	HW/NW-300/24; S-140/30
Date Start/Finish:	06-25-2012/06-27-2012	**Drilling Method:**	HW/NW Drive	**Core Barrel:**	NQ - 2.0 in. ID
Boring Location:	Sta. 19+42, 22.3' Rt.	**Casing ID/OD:**	HW-4.0 in. ID/NW-3.0 in. ID	**Water Level*:**	Not Measured
Hammer Efficiency Factor: 0.6		**Hammer Type:**	Automatic☐ Hydraulic☐ Rope & Cathead☒		

Definitions:
D = Split Spoon Sample
MD = Unsuccessful Split Spoon Sample attempt
U = Thin Wall Tube Sample
MU = Unsuccessful Thin Wall Tube Sample attempt
V = Insitu Vane Shear Test
MV = Unsuccessful Insitu Vane Shear Test attempt
R = Rock Core Sample
SSA = Solid Stem Auger
HSA = Hollow Stem Auger
RC = Roller Cone
WOH = weight of 140lb. hammer
WOR = weight of rods
WO1P = Weight of one person
S=u=(~f~a~b~) = Insitu Field Vane Shear Strength (psf)
T=v = Pocket Torvane Shear Strength (psf)
q=p = Unconfined Compressive Strength (ksf)
N-uncorrected = Raw field SPT N-value
Hammer Efficiency Factor = Annual Calibration Value
N-6-0 = SPT N-uncorrected corrected for hammer efficiency
N-6-0 = (Hammer Efficiency Factor/60%)*N-uncorrected
S=u=(~f~a~b~) = Lab Vane Shear Strength (psf)
WC = water content, percent
LL = Liquid Limit
PL = Plastic Limit
PI = Plasticity Index
G = Grain Size Analysis
C = Consolidation Test

Sample Information

Depth (ft.)	Sample No.	Pen./Rec. (in.)	Sample Depth (ft.)	Blows (6 in.) Shear Strength (psf) or RQD (%)	N-uncorrected	N-6-0	Casing Blows	Elevation (ft.)	Visual Description and Remarks	Laboratory Testing Results/ AASHTO and Unified Class.
100	R4	35/18	100.7 - 103.6	RQD = 0%				496.5	Foliation dipping at low angles where discernible. Rock Mass Quality=Very Poor Recovery=50% -LITTLETON FORMATION- R3 Core Times (min:sec): 96.7-97.7' (3:00); 97.7-98.7' (3:08); 98.7-99.7' (4:47); 99.7-100.7' (4:33) Dark green-gray to light green-gray, fine to coarse grained, micaceous GNEISS. Very soft, severely weathered. Joints indiscernible due to fractured/decomposed nature of recovery. Foliation dipping at low angles where discernible. Rock Mass Quality=Very Poor Recovery=51% -LITTLETON FORMATION- R4 Core Times (min:sec): 100.7-101.7' (6:46); 101.7-102.2' (6:00); 102.2-103.2' (4:15); 103.2-103.6' (5:23) 103.6 Bottom of Exploration at 103.6 feet below ground surface.	
105										
110										
115										
120										
125										

Remarks:
1. As-drilled coordinates of test borings determined by MaineDOT and provided to Haley & Aldrich in NAD 83 Maine 2000 West Zone Coordinate System. As-drilled coordinates related to station and offset information by TranSystems.
2. DS-1 = direct shear test no.; FA = friction angle; c = cohesion; psf = pounds per square foot.

Stratification lines represent approximate boundaries between soil types; transitions may be gradual.
* Water level readings have been made at times and under conditions stated. Groundwater fluctuations may occur due to conditions other than those present at the time measurements were made.

Page 5 of 5
Boring No.: BB-RAR-120

HALEY & ALDRICH

STATE OF MAINE
DEPARTMENT OF TRANSPORTATION
BH-1510(500)X
WIN 15105.00
BRIDGE PLANS
BRIDGE NO. 3248

STATE OF MAINE WAYNE R. CHADBOURNE No. 10620 PROFESSIONAL ENGINEER

SIGNATURE		
10620	P.E. NUMBER	
5/29/2013	DATE	

PROJ. MANAGER	S. BRIDGE	BY	DATE
DESIGN-DETAILED	B. STEINERT	B. STEINERT	02/2013
CHECKED-REVIEWED	B. STEINERT	W. CHADBOURNE	02/2013
DESIGN2-DETAILED2			
DESIGN3-DETAILED3			
REVISIONS 1			
REVISIONS 2			
REVISIONS 3			
REVISIONS 4			
FIELD CHANGES			

MARTIN MEMORIAL BRIDGE
ANDROSCOGGIN RIVER
RUMFORD OXFORD COUNTY
BORING LOGS

SHEET NUMBER
60
OF 95

Filename: ...\0030\Road\061_BoringLogs.dgn Division: BRIDGE Username: T SANDELL Date:5/29/2013

Maine Department of Transportation
Soil/Rock Exploration Log
US CUSTOMARY UNITS

Project: Martin Memorial Bridge Replacement
Location: Route 232 - Rumford, Maine
Boring No.: BB-RAR-121
PIN: 15105.00

Driller:	Maine Test Borings	**Elevation (ft.)**	637.0	**Auger ID/OD:**	--
Operator:	B. Enos	**Datum:**	NAVD 88	**Sampler:**	Split Spoon-1.375 in. ID
Logged By:	B. Babcock	**Rig Type:**	CME 45 Skid on Trailer	**Hammer Wt./Fall:**	NW-300/24; S-140/30
Date Start/Finish:	06-06-2012/06-06-2012	**Drilling Method:**	NW Drive	**Core Barrel:**	--
Boring Location:	Sta. 20+93, 91.0' Lt.	**Casing ID/OD:**	NW-3.0 in. ID	**Water Level *:**	22.4
Hammer Efficiency Factor:	0.6	**Hammer Type:**	Automatic☐ Hydraulic☐ Rope & Cathead☒		

Definitions:
D = Split Spoon Sample
MD = Unsuccessful Split Spoon Sample attempt
U = Thin Wall Tube Sample
MU = Unsuccessful Thin Wall Tube Sample attempt
V = Insitu Vane Shear Test
MV = Unsuccessful Insitu Vane Shear Test attempt
R = Rock Core Sample
SSA = Solid Stem Auger
HSA = Hollow Stem Auger
RC = Roller Cone
WOH = weight of 140lb. hammer
WOR = weight of rods
WO1P = Weight of one person
S-u =Insitu Field Vane Shear Strength (psf)
T-v = Pocket Torvane Shear Strength (psf)
q-p = Unconfined Compressive Strength (ksf)
N-uncorrected = Raw field SPT N-value
Hammer Efficiency Factor = Annual Calibration Value
N-6-0 = SPT N-uncorrected corrected for hammer efficiency
N-6-0 = (Hammer Efficiency Factor/60%)*N-uncorrected
S-u-(-t-a-b-) = Lab Vane Shear Strength (psf)
WC = water content, percent
LL = Liquid Limit
PL = Plastic Limit
PI = Plasticity Index
G = Grain Size Analysis
C = Consolidation Test

Sample Information

Depth (ft.)	Sample No.	Pen./Rec. (in.)	Sample Depth (ft.)	Blows (/6 in.) Shear Strength (psf) or RQD (%)	N-uncorrected	N-6-0	Casing Blows	Elevation (ft.)	Graphic Log	Visual Description and Remarks	Laboratory Testing Results/ AASHTO and Unified Class.
0	1D	18/8	0.5 - 2.0	7/17/14	31	31	NW Push	636.5		-BITUMINOUS CONCRETE- (0.5)	
										Brown, dry, dense, fine to medium SAND, trace coarse sand and silt, little fine gravel -FILL-(SP) (2.0)	G#248307 A-1-b, SP WC=2.6%
	2D	24/12	2.0 - 4.0	8/11/12/12	23	23		635.0		Brown, dry, medium dense, fine to medium SAND, trace coarse sand, silt and fine gravel, weakly stratified -ALLUVIAL DEPOSIT-(SP)	G#248308 A-1-b, SP WC=4.4%
	3D	24/20	4.0 - 6.0	10/9/8/9	17	17	14			Tan, dry, medium dense, fine to coarse SAND, stratified -ALLUVIAL DEPOSIT-(SW)	
5							12				
							10				
							10				
							16				
	4D	24/8	9.0 - 11.0	5/6/6/6	12	12	16			Tan, wet, medium dense, fine to coarse SAND, stratified -ALLUVIAL DEPOSIT-(SW)	
10							16				
							15				
							15				
							15				
	5D	24/6	14.0 - 16.0	4/4/6/7	10	10	20			Gray-brown, wet, loose, fine to coarse SAND, stratified -ALLUVIAL DEPOSIT-(SW)	
15							19				
							18				
							16				
							18				
	6D	24/8	19.0 - 21.0	5/5/6/6	11	11	18			Gray-brown and yellow, saturated, medium dense, fine to coarse SAND, stratified -ALLUVIAL DEPOSIT-(SW)	
20							20				
							26				
							29				
							30				
	7D	24/10	24.0 - 26.0	6/5/6/6	11	11	19			Gray-brown to brown, saturated, medium dense, fine to coarse SAND, trace gravel, stratified -ALLUVIAL DEPOSIT-(SW)	
25							20				
							24				
							25				
							24				
	8D	24/10	29.0 - 31.0	4/5/6/8	11	11	14			Gray-brown, saturated, medium dense, fine to coarse SAND, trace gravel, stratified -ALLUVIAL DEPOSIT-(SW)	
30							18				
							26				
							37				
							44				
	9D	24/12	34.0 - 36.0	4/4/6/7	10	10	26	603.0		Gray-brown, saturated, loose, fine SAND, trace silt, trace medium sand, weakly stratified -ALLUVIAL DEPOSIT-(SP) (34.0)	
35							48				
							58				
							64				
							69				
	10D	24/8	39.0 - 41.0	8/10/7/6	17	17	24	598.0		Brown with gray-brown, saturated, medium dense, fine to coarse SAND, little gravel, trace silt, occasional very loose bonding -ALLUVIAL DEPOSIT-(SW) (39.0)	
40							39				
							57				
							43				
							49				
	11D	24/16	44.0 - 46.0	3/2/5/7	7	7	OPEN	593.0		Gray-brown, saturated, loose, silty fine SAND, trace clay, trace medium to coarse sand in bottom 2 in. of recovery, stratified with occasional clay laminae -GLACIOLACUSTRINE DEPOSIT-(SM) (44.0)	
45											
50	12D	11/6	49.0 - 49.9	11/100(5.0")				588.0		Brown, wet, very dense, fine to coarse SAND, little silt, trace gravel (49.0)	

Remarks:

1. As-drilled coordinates of test borings determined by MaineDOT and provided to Haley & Aldrich in NAD 83 Maine 2000 West Zone Coordinate System. As-drilled coordinates related to station and offset information by TranSystems.

Stratification lines represent approximate boundaries between soil types; transitions may be gradual.

* Water level readings have been made at times and under conditions stated. Groundwater fluctuations may occur due to conditions other than those present at the time measurements were made.

Page 2 of 3

Boring No.: BB-RAR-121

Maine Department of Transportation
Soil/Rock Exploration Log
US CUSTOMARY UNITS

Project: Martin Memorial Bridge Replacement
Location: Route 232 - Rumford, Maine
Boring No.: BB-RAR-121
PIN: 15105.00

Driller:	Maine Test Borings	**Elevation (ft.)**	637.0	**Auger ID/OD:**	--
Operator:	B. Enos	**Datum:**	NAVD 88	**Sampler:**	Split Spoon-1.375 in. ID
Logged By:	B. Babcock	**Rig Type:**	CME 45 Skid on Trailer	**Hammer Wt./Fall:**	NW-300/24; S-140/30
Date Start/Finish:	06-06-2012/06-06-2012	**Drilling Method:**	NW Drive	**Core Barrel:**	--
Boring Location:	Sta. 20+93, 91.0' Lt.	**Casing ID/OD:**	NW-3.0 in. ID	**Water Level *:**	22.4
Hammer Efficiency Factor:	0.6	**Hammer Type:**	Automatic☐ Hydraulic☐ Rope & Cathead☒		

Definitions:
D = Split Spoon Sample
MD = Unsuccessful Split Spoon Sample attempt
U = Thin Wall Tube Sample
MU = Unsuccessful Thin Wall Tube Sample attempt
V = Insitu Vane Shear Test
MV = Unsuccessful Insitu Vane Shear Test attempt
R = Rock Core Sample
SSA = Solid Stem Auger
HSA = Hollow Stem Auger
RC = Roller Cone
WOH = weight of 140lb. hammer
WOR = weight of rods
WO1P = Weight of one person
S-u =Insitu Field Vane Shear Strength (psf)
T-v = Pocket Torvane Shear Strength (psf)
q-p = Unconfined Compressive Strength (ksf)
N-uncorrected = Raw field SPT N-value
Hammer Efficiency Factor = Annual Calibration Value
N-6-0 = SPT N-uncorrected corrected for hammer efficiency
N-6-0 = (Hammer Efficiency Factor/60%)*N-uncorrected
S-u-(-t-a-b-) = Lab Vane Shear Strength (psf)
WC = water content, percent
LL = Liquid Limit
PL = Plastic Limit
PI = Plasticity Index
G = Grain Size Analysis
C = Consolidation Test

Sample Information

Depth (ft.)	Sample No.	Pen./Rec. (in.)	Sample Depth (ft.)	Blows (/6 in.) Shear Strength (psf) or RQD (%)	N-uncorrected	N-6-0	Casing Blows	Elevation (ft.)	Graphic Log	Visual Description and Remarks	Laboratory Testing Results/ AASHTO and Unified Class.
50								587.1		weakly bonded -GLACIAL TILL-(SM) (49.9)	
										Bottom of Exploration at 49.9 feet below ground surface.	
										Note: Split spoon refusal on top of probable bedrock at 49.9 ft.	
55											
60											
65											
70											
75											

Remarks:

1. As-drilled coordinates of test borings determined by MaineDOT and provided to Haley & Aldrich in NAD 83 Maine 2000 West Zone Coordinate System. As-drilled coordinates related to station and offset information by TranSystems.

Stratification lines represent approximate boundaries between soil types; transitions may be gradual.

* Water level readings have been made at times and under conditions stated. Groundwater fluctuations may occur due to conditions other than those present at the time measurements were made.

Page 3 of 3

Boring No.: BB-RAR-121

Maine Department of Transportation
Soil/Rock Exploration Log
US CUSTOMARY UNITS

Project: Martin Memorial Bridge Replacement
Location: Route 232 - Rumford, Maine
Boring No.: BB-RAR-122
PIN: 15105.00

Driller:	Maine Test Borings	**Elevation (ft.)**	633.5	**Auger ID/OD:**	HSA-2.25 in. ID
Operator:	B. Enos	**Datum:**	NAVD 88	**Sampler:**	Split Spoon-1.375 in. ID
Logged By:	B. Babcock	**Rig Type:**	CME 45 Skid on Trailer	**Hammer Wt./Fall:**	S-140/30
Date Start/Finish:	06-07-2012/06-07-2012	**Drilling Method:**	HSA	**Core Barrel:**	--
Boring Location:	Sta. 30+66, 19.2' Rt.	**Casing ID/OD:**	--	**Water Level *:**	None Encountered
Hammer Efficiency Factor:	0.6	**Hammer Type:**	Automatic☐ Hydraulic☐ Rope & Cathead☒		

Definitions:
D = Split Spoon Sample
MD = Unsuccessful Split Spoon Sample attempt
U = Thin Wall Tube Sample
MU = Unsuccessful Thin Wall Tube Sample attempt
V = Insitu Vane Shear Test
MV = Unsuccessful Insitu Vane Shear Test attempt
R = Rock Core Sample
SSA = Solid Stem Auger
HSA = Hollow Stem Auger
RC = Roller Cone
WOH = weight of 140lb. hammer
WOR = weight of rods
WO1P = Weight of one person
S-u =Insitu Field Vane Shear Strength (psf)
T-v = Pocket Torvane Shear Strength (psf)
q-p = Unconfined Compressive Strength (ksf)
N-uncorrected = Raw field SPT N-value
Hammer Efficiency Factor = Annual Calibration Value
N-6-0 = SPT N-uncorrected corrected for hammer efficiency
N-6-0 = (Hammer Efficiency Factor/60%)*N-uncorrected
S-u-(-t-a-b-) = Lab Vane Shear Strength (psf)
WC = water content, percent
LL = Liquid Limit
PL = Plastic Limit
PI = Plasticity Index
G = Grain Size Analysis
C = Consolidation Test

Sample Information

Depth (ft.)	Sample No.	Pen./Rec. (in.)	Sample Depth (ft.)	Blows (/6 in.) Shear Strength (psf) or RQD (%)	N-uncorrected	N-6-0	Casing Blows	Elevation (ft.)	Graphic Log	Visual Description and Remarks	Laboratory Testing Results/ AASHTO and Unified Class.
0	1D	24/16	0.5 - 2.5	10/18/13/31	31	31	HSA	633.5		-BITUMINOUS CONCRETE- (0.4)	
										Brown, dry, dense, fine to coarse SAND, trace gravel, trace silt -FILL-(SW) (2.5)	
	2D	24/14	2.5 - 4.5	19/14/10/10	24	24		631.0		Red-brown to tan, dry, medium dense, fine SAND, little medium to coarse sand, trace gravel in top 2 in. of recovery, stratified -ALLUVIAL DEPOSIT-(SP) (5.5)	
5	3D	24/18	5.5 - 7.5	6/6/8/8	14	14		628.0		Tan, dry, medium dense, fine to coarse SAND, trace silt, stratified with frequent silt partings -ALLUVIAL DEPOSIT-(SW-SM)	
										Tan, dry, medium dense, fine to coarse SAND, stratified -ALLUVIAL DEPOSIT-(SW)	
	4D	24/12	7.5 - 9.5	6/6/7/9	13	13					
										Tan, dry, medium dense, fine to coarse SAND, stratified -ALLUVIAL DEPOSIT-(SW)	
	5D	24/20	9.5 - 11.5	7/5/7/7	12	12					
10											
15											
20											
25											

Remarks:

1. As-drilled coordinates of test borings determined by MaineDOT and provided to Haley & Aldrich in NAD 83 Maine 2000 West Zone Coordinate System. As-drilled coordinates related to station and offset information by TranSystems.
2. Station and offset information reference the existing Route 232 baseline.

Stratification lines represent approximate boundaries between soil types; transitions may be gradual.

* Water level readings have been made at times and under conditions stated. Groundwater fluctuations may occur due to conditions other than those present at the time measurements were made.

Page 1 of 1

Boring No.: BB-RAR-122

Maine Department of Transportation
Soil/Rock Exploration Log
US CUSTOMARY UNITS

Project: Martin Memorial Bridge Replacement
Location: Route 232 - Rumford, Maine
Boring No.: BB-RAR-123
PIN: 15105.00

Driller:	Maine Test Borings	**Elevation (ft.)**	634.1	**Auger ID/OD:**	HSA-2.25 in. ID
Operator:	B. Enos	**Datum:**	NAVD 88	**Sampler:**	Split Spoon-1.375 in. ID
Logged By:	B. Babcock	**Rig Type:**	CME 45 Skid on Trailer	**Hammer Wt./Fall:**	S-140/30
Date Start/Finish:	06-07-2012/06-07-2012	**Drilling Method:**	HSA	**Core Barrel:**	--
Boring Location:	Sta. 32+07, 0.5' Lt.	**Casing ID/OD:**	--	**Water Level *:**	16.9
Hammer Efficiency Factor:	0.6	**Hammer Type:**	Automatic☐ Hydraulic☐ Rope & Cathead☒		

Definitions:
D = Split Spoon Sample
MD = Unsuccessful Split Spoon Sample attempt
U = Thin Wall Tube Sample
MU = Unsuccessful Thin Wall Tube Sample attempt
V = Insitu Vane Shear Test
MV = Unsuccessful Insitu Vane Shear Test attempt
R = Rock Core Sample
SSA = Solid Stem Auger
HSA = Hollow Stem Auger
RC = Roller Cone
WOH = weight of 140lb. hammer
WOR = weight of rods
WO1P = Weight of one person
S-u =Insitu Field Vane Shear Strength (psf)
T-v = Pocket Torvane Shear Strength (psf)
q-p = Unconfined Compressive Strength (ksf)
N-uncorrected = Raw field SPT N-value
Hammer Efficiency Factor = Annual Calibration Value
N-6-0 = SPT N-uncorrected corrected for hammer efficiency
N-6-0 = (Hammer Efficiency Factor/60%)*N-uncorrected
S-u-(-t-a-b-) = Lab Vane Shear Strength (psf)
WC = water content, percent
LL = Liquid Limit
PL = Plastic Limit
PI = Plasticity Index
G = Grain Size Analysis
C = Consolidation Test

Sample Information

Depth (ft.)	Sample No.	Pen./Rec. (in.)	Sample Depth (ft.)	Blows (/6 in.) Shear Strength (psf) or RQD (%)	N-uncorrected	N-6-0	Casing Blows	Elevation (ft.)	Graphic Log	Visual Description and Remarks	Laboratory Testing Results/ AASHTO and Unified Class.
0	1D	18/10	0.5 - 2.0	22/25/24	49	49	HSA	633.6		-BITUMINOUS CONCRETE- (0.5)	
										Brown, dry, dense, fine to coarse SAND, little gravel -FILL-(SW) Note: Drill action and cuttings indicated 10-20% fine to coarse gravel between approximately 0.5 and 4.0 ft.	
	2D	24/10	2.0 - 4.0	10/9/10/9	19	19				Light brown, dry, medium dense, fine to coarse SAND, little gravel -FILL-(SW)	
	3D	24/12	4.0 - 6.0	4/4/2/2	6	6				Light brown to tan, dry, loose, fine to coarse SAND, trace gravel, occasional weak layering -FILL-(SW)	
5	4D	24/4	6.0 - 8.0	2/1/1/5	2	2				Light brown, dry, very loose, fine to coarse SAND, trace fine to coarse gravel -FILL-(SW)	
	5D	24/17	8.0 - 10.0	4/3/4/11	7	7		624.9		Light brown, dry, loose, fine to coarse SAND -FILL-(SW) (9.2)	
10	6D	24/8	10.0 - 12.0	10/9/8/7	17	17				Dark gray-brown, moist, loose, fine to coarse SAND, trace silt, trace plant fibers, stratified -ALLUVIAL DEPOSIT-(SW-SM) Dark gray-brown to mottled gray with red, moist, medium dense, fine to medium SAND, little silt, trace coarse sand, stratified -ALLUVIAL DEPOSIT-(SW)	
15	7D	24/10	15.0 - 17.0	1/1/1/3	2	2		619.1		Light brown to red-brown, moist, soft, SILT, little fine to medium sand, trace clay, trace plant fibers, low plasticity -ALLUVIAL DEPOSIT-(ML) (15.0)	
								617.1		Bottom of Exploration at 17.0 feet below ground surface. (17.0)	
20											
25											

Remarks:

1. As-drilled coordinates of test borings determined by MaineDOT and provided to Haley & Aldrich in NAD 83 Maine 2000 West Zone Coordinate System. As-drilled coordinates related to station and offset information by TranSystems.
2. Station and offset information reference the existing Route 232 baseline.

Stratification lines represent approximate boundaries between soil types; transitions may be gradual.

* Water level readings have been made at times and under conditions stated. Groundwater fluctuations may occur due to conditions other than those present at the time measurements were made.

Page 1 of 1

Boring No.: BB-RAR-123

HALEY & ALDRICH

STATE OF MAINE
DEPARTMENT OF TRANSPORTATION

BH-1510(500)X

WIN 15105.00

BRIDGE PLANS

BRIDGE NO. 3248

STATE OF MAINE — WAYNE A. CHADBOURNE — No. 10620 — PROFESSIONAL ENGINEER

	BY	DATE
PROJ. MANAGER	S. BOGGE	
DESIGN-DETAILED	B. STEINERT	02/2013
CHECKED-REVIEWED	W. CHADBOURNE	02/2013
DESIGN2-DETAILED2		
DESIGN3-DETAILED3		
REVISIONS 1		
REVISIONS 2		
REVISIONS 3		
REVISIONS 4		
FIELD CHANGES		

SIGNATURE

10620
P.E. NUMBER

5/29/2013
DATE

MARTIN MEMORIAL BRIDGE
ANDROSCOGGIN RIVER
RUMFORD OXFORD COUNTY

BORING LOGS

SHEET NUMBER
61
OF 95

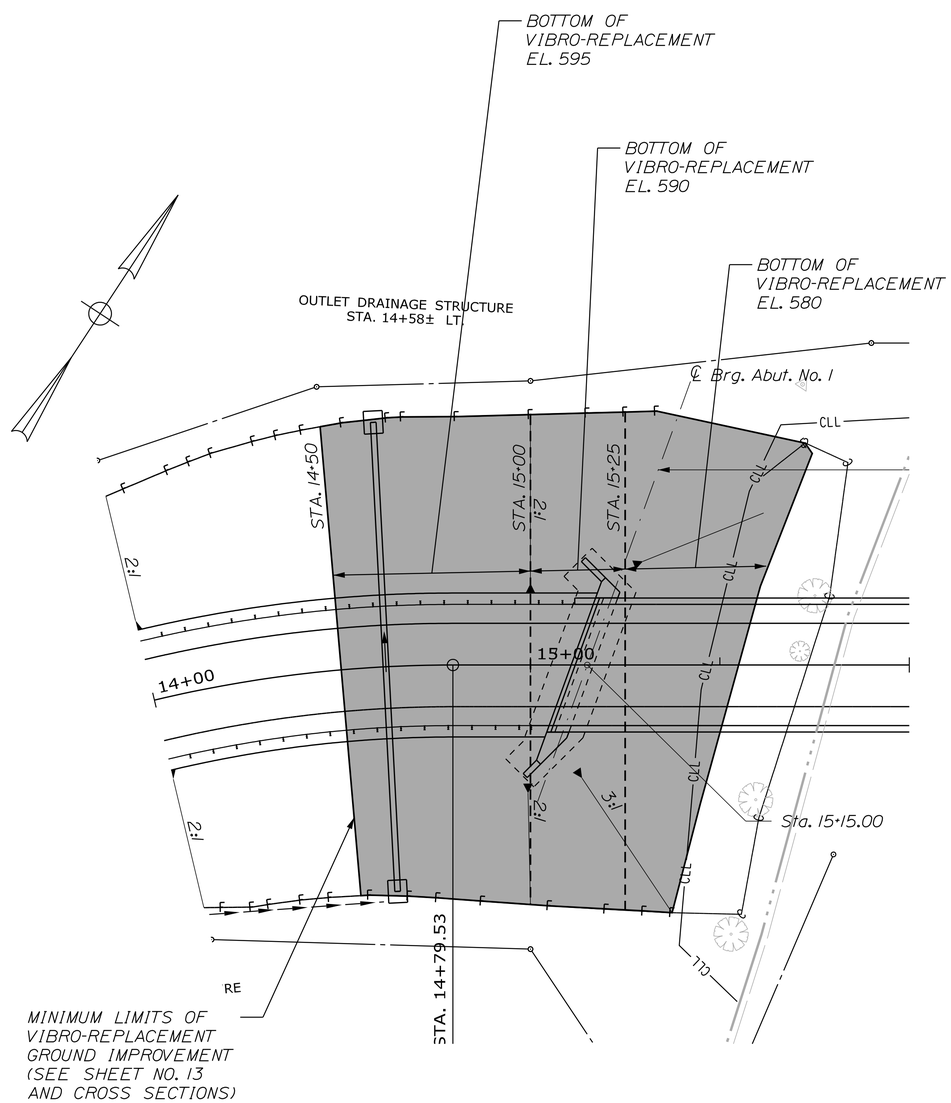

ABUTMENT 1 PLAN

20 0 20 40
Scale in Feet

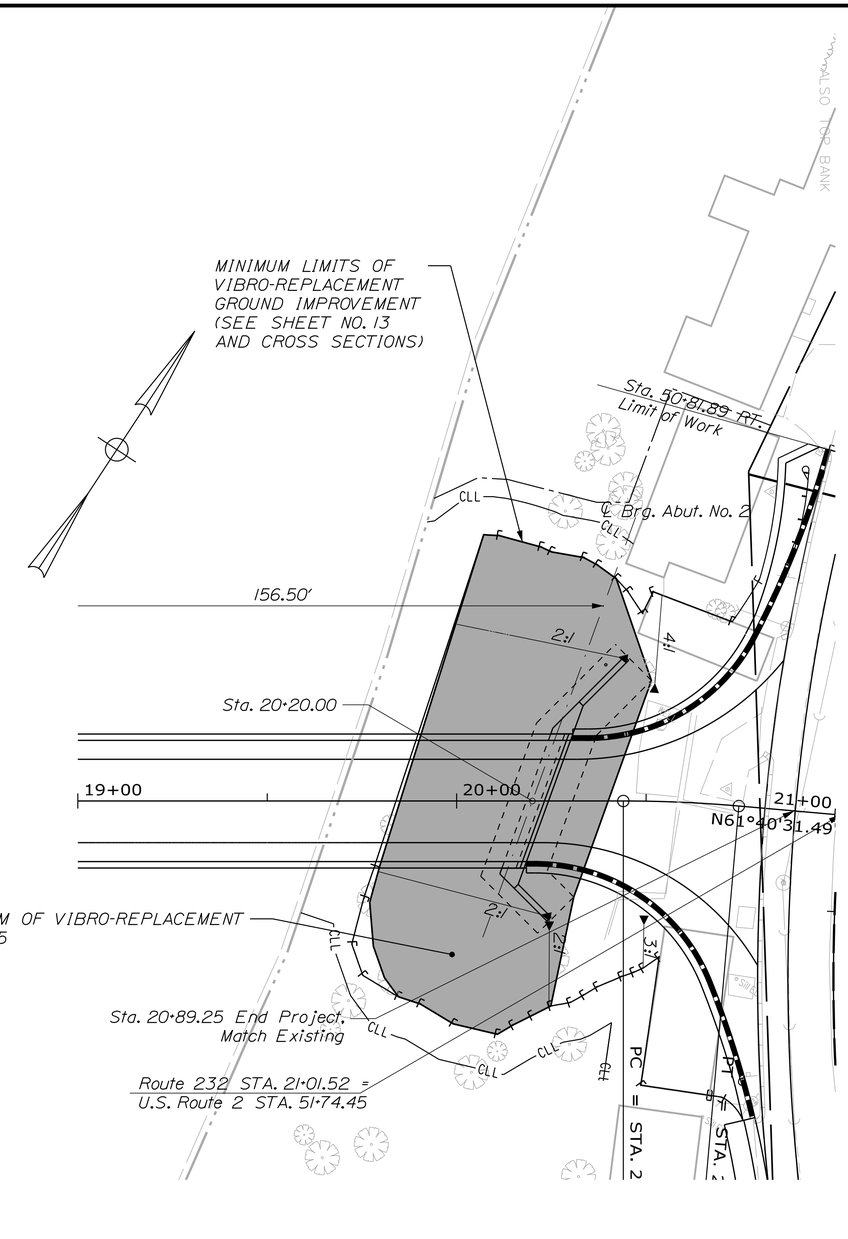

ABUTMENT 2 PLAN

20 0 20 40
Scale in Feet

VIBRO-REPLACEMENT GROUND IMPROVEMENT NOTES:

1. DESIGN AND CONSTRUCTION OF VIBRO-REPLACEMENT GROUND IMPROVEMENT SHALL BE COMPLETED IN ACCORDANCE WITH SPECIAL PROVISION 203 - VIBRO-REPLACEMENT GROUND IMPROVEMENT AND WILL BE PAID FOR UNDER ITEM NO. 203.218.
2. VIBRO-REPLACEMENT GROUND IMPROVEMENT SHALL BE COMPLETED TO THE ELEVATIONS SHOWN. REFER TO CROSS SECTION DRAWINGS FOR ADDITIONAL DETAILS ON THE MINIMUM HORIZONTAL AND VERTICAL LIMITS OF VIBRO-REPLACEMENT GROUND IMPROVEMENT.
3. THE VIBRO-REPLACEMENT GROUND IMPROVEMENT PATTERN AND SPACING SHALL BE COORDINATED WITH THE PLAN LOCATION OF THE ABUTMENT FOUNDATION PILES AND PROPOSED CONSTRUCTION SEQUENCING.

HALEY & ALDRICH

STATE OF MAINE
DEPARTMENT OF TRANSPORTATION

BH-1510(500)X

WIN 15105.00

BRIDGE NO. 3248

BRIDGE PLANS

STATE OF MAINE WAYNE A. CHADBOURNE No. 10620 LICENSED PROFESSIONAL ENGINEER

PROJ. MANAGER	S. BODGE		
DESIGN-DETAILED	B. STEINERT	B. STEINERT	02/2013
CHECKED-REVIEWED	W. CHADBOURNE	W. CHADBOURNE	
DESIGN2-DETAILED2			
DESIGN3-DETAILED3			
REVISIONS 1			
REVISIONS 2			
REVISIONS 3			
REVISIONS 4			
FIELD CHANGES			

SIGNATURE
106620
P.E. NUMBER
5/29/2013
DATE

MARTIN MEMORIAL BRIDGE
ANDROSCOGGIN RIVER
RUMFORD OXFORD COUNTY

GROUND IMPROVEMENT PLAN

SHEET NUMBER
62
OF 95

Filename: ...\062_GroundImprovementPlan.dgn Division: BRIDGE Username: T SANDELL Date:5/29/2013

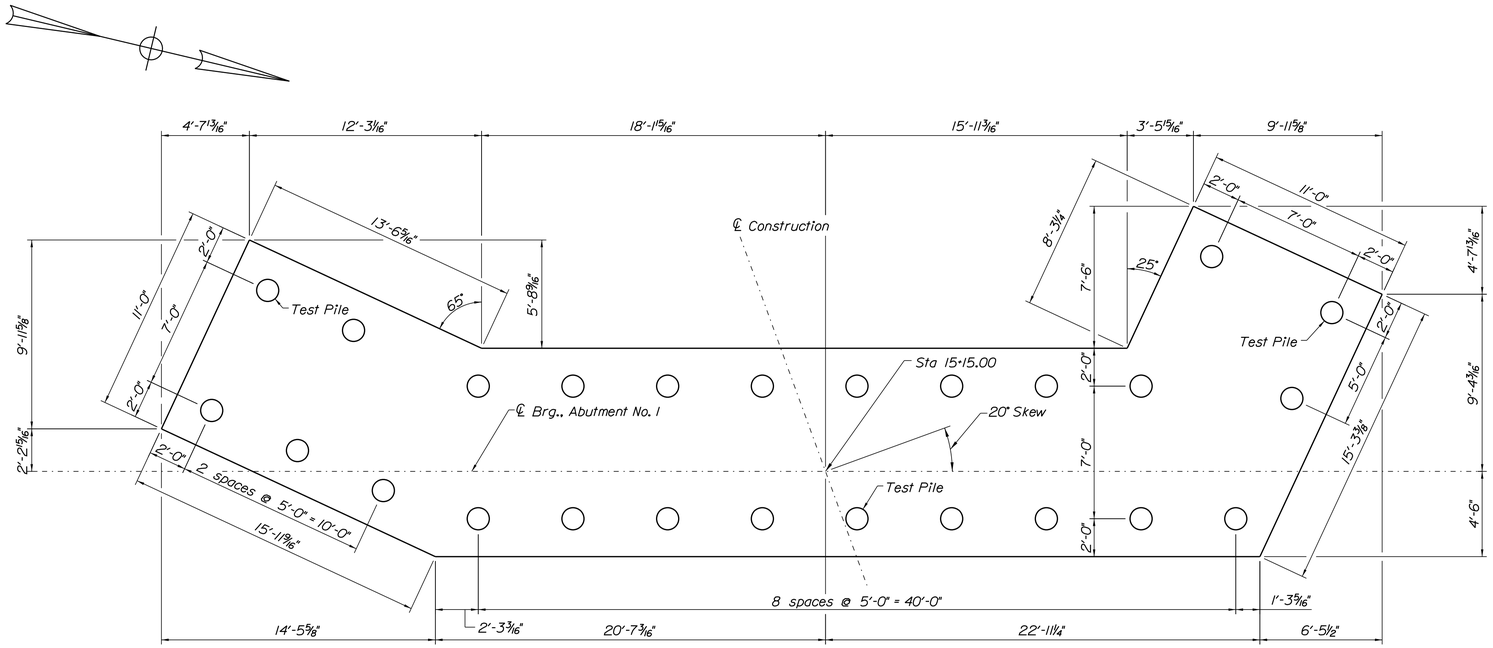

ABUTMENT NO. 1 FOOTING PLAN

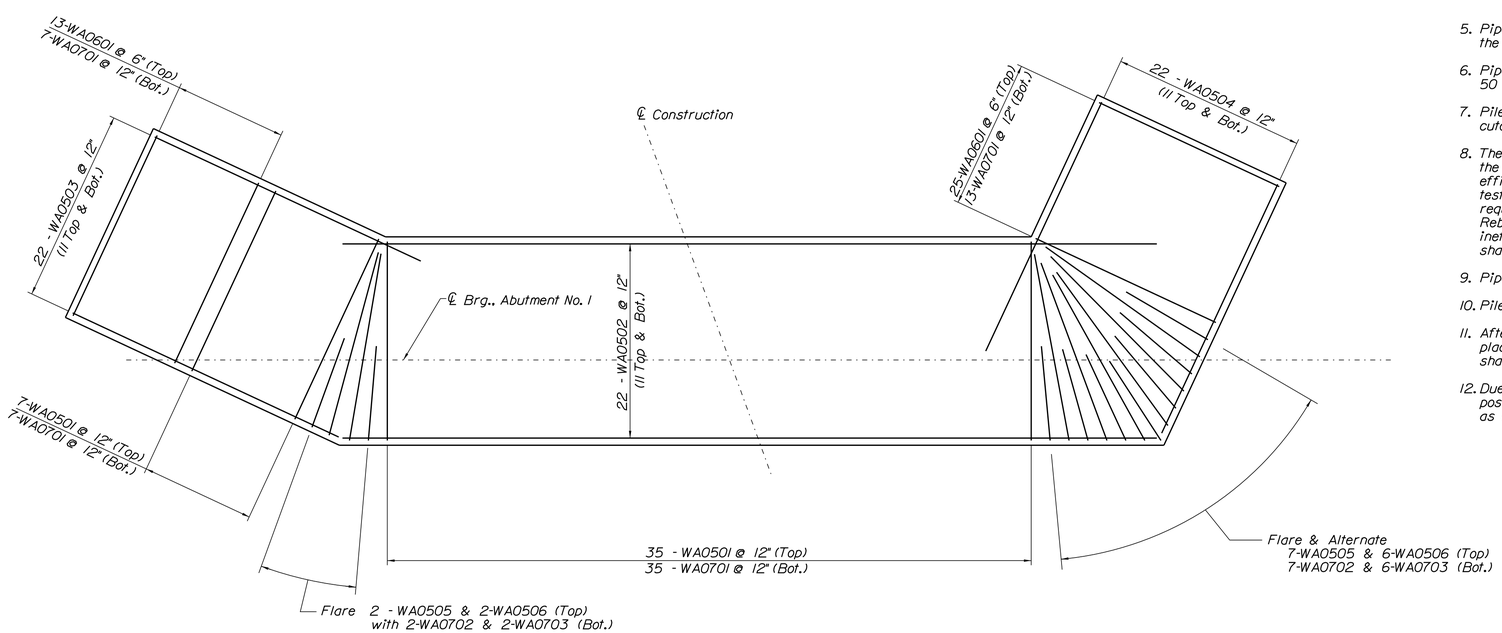

ABUTMENT NO. 1 REINFORCEMENT PLAN

Abutment Notes

1. Reinforcing steel shall have a minimum concrete cover of 2 inches in the walls and 3 inches cover in the footings unless otherwise noted.
2. Cover joints where waterstops are not required in accordance with Standard Detail 502 (01).
3. Place 4 inch diameter drains in breastwall and wingwalls at 10 foot maximum spacing. The exact location will be determined by the Resident.
4. Construct French Drains behind the abutments and wingwalls in accordance with Standard Specification Section 512, French Drains.
5. Structural Earth Excavation, Abutments and Retaining Walls, required more than 12 inches below the bottom of the structure, will be paid for in accordance with Standard Specifications Section 206, Structural Excavation.
6. Abutments, wingwalls, and their footings shall be backfilled with Granular Borrow. Pay limits will be the structural excavation limits in cut areas and a vertical plane located 10 feet behind the walls in fill areas.

Abutment & Pier Pile Notes

1. The maximum factored pile loads (excluding downdrag) are:
   Abutment No. 1: 226 kips
   Abutment No. 2: 248 kips
   Pier No. 1: 327 kips
   Pier No. 2: 327 kips
2. Estimate of piles required:
   Abutment No. 1: 25 - 14 x 0.500 @ EL. 505
   Abutment No. 2: 32 - 14 x 0.500 @ EL. 535
   Pier No. 1: 18 - 24 x 0.625 (See sheet 71 for pile tip elevations)
   Pier No. 2: 18 - 24 x 0.625 (See sheet 71 for pile tip elevations)

   Estimated minimum pile tip elevations shown are required to resist all loading combinations and consider the estimated scour depths.
3. The Contractor shall perform and submit a wave equation analysis for review and acceptance by the Resident. The maximum allowable driving stress is 0.90 times Fy. The submittal analyses shall include the proposed stopping criteria based on the wave equation analysis and the proposed driving system. The stopping criteria shall include the blows per inch and the number of 1 inch driving intervals at which pile installation may be terminated. The cost of performing the wave equation analysis Will be considered incidental to Item No. 501.92, Pile Driving Equipment Mobilization.
4. The Contractor shall perform a total of 12 dynamic pile load tests, three at each substructure (abutment, pier), with 24-hour (minimum) restrike tests to confirm the nominal resistance of the piles. The dynamic pile load tests at each substructure (abutment, pier) location shall be completed prior to production pile driving at each location. At each substructure location, two test piles shall be located at the opposite ends of the substructure and one test pile shall be located at the midway point of the substructure as shown on the plans. The minimum required nominal pile resistances (including both structural demand and downdrag forces) are:

   Abutment 1: 348 kips
   Abutment 2: 382 kips
   Pier 1: 747 kips
   Pier 2: 702 kips
5. Pipe piles shall be driven close-ended and be fitted with a conical pile tip that meets the requirements of the Standard Specifications Section 711.01.
6. Pipe pile material shall be ASTM A252, Grade 3 modified, miminum yield stress, Fy = 50 ksi.
7. Piles shall not be out of position more than 6 inches in any direction at the proposed cutoff elevation.
8. The driving system shall be operating at efficiency equal to or greater than that used in the wave equation submittal. If the driving system is not operating at the required efficiency, as indicated by the approved wave equation analysis and/or dynamic load test results, the Contractor shall rebuild or replace driving system components, as required to provide an acceptable driving system, as approved by the Department. Rebuilding or replacing driving system components resulting from driving system inefficiency, including additional wave equation analyses and/or dynamic load tests shall be at no additional cost.
9. Pipe pile splices shall be in accordance With Standard Detail 501(02).
10. Pile layout dimensions provided are along the bottom of abutment or pile cap.
11. After installation, pipe piles will be filled with Class A concrete. Concrete shall be placed using tremie methods. All costs associated with furnishing and placing concrete shall be considered incidental to the cost of Item 501.701 Steel Pipe Pile, In Place.
12. Due to the presence of sloping bedrock at the site, pile "walking" during driving is possible. Costs associated with removing and re-driving pile(s) that are out of position as a result of "walking" shall be incidental to related contract items.

TranSystems

STATE OF MAINE
DEPARTMENT OF TRANSPORTATION

BH-1510(500)X

WIN 15105.00

BRIDGE NO. 3248

BRIDGE PLANS

STATE OF MAINE
EVAN C. LOWELL
NO. 9065
PROFESSIONAL ENGINEER

PROJ. MANAGER	S. BODGE	BY	DATE
DESIGN-DETAILED	C. GAMACHE	D. HODGES	9/12
CHECKED-REVIEWED	E. LOWELL	T. STUDPIS	9/12
DESIGN2-DETAILED2	B. BOYACI	J. NEARY	9/12
DESIGN3-DETAILED3			
REVISIONS 1			
REVISIONS 2			
REVISIONS 3			
REVISIONS 4			
FIELD CHANGES			

SIGNATURE
9065
P.E. NUMBER
6/17/2013
DATE

MARTIN MEMORIAL BRIDGE
ANDROSCOGGIN RIVER
RUMFORD OXFORD COUNTY

ABUTMENT 1 FOOTING PLAN

SHEET NUMBER
63
OF 95

Filename: ...\Road\063_Abut_1_Footing.dgn Division: BRIDGE Username: T SANDELL Date:6/17/2013

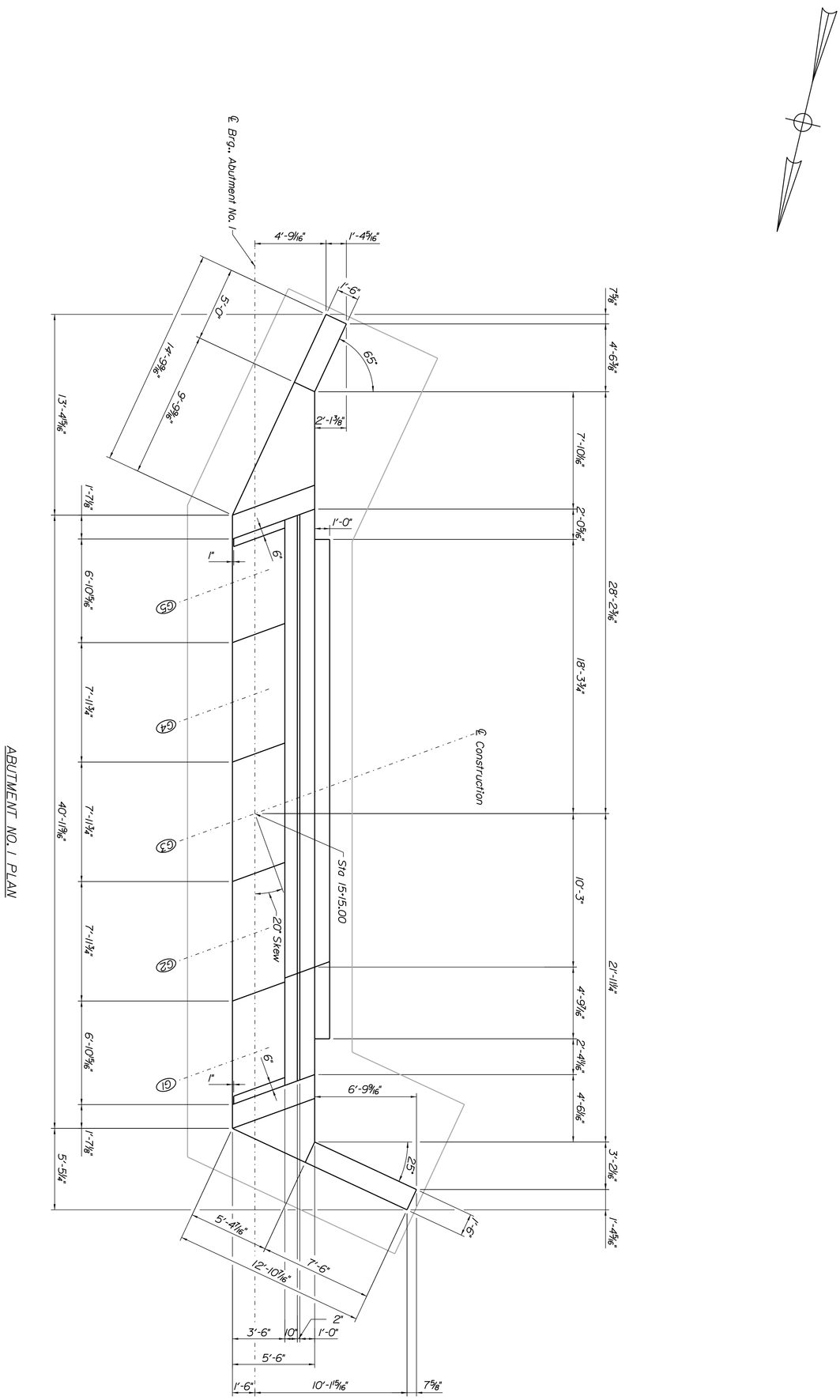

PROJ. MANAGER	S. BODGE	BY	DATE
DESIGN-DETAILED	C. GAMACHE	D. HODGES	9/12
CHECKED-REVIEWED	E. LOWELL	T. STUOPIS	9/12
DESIGN2-DETAILED2	B. BOYACI	J. NEARY	9/12
DESIGN3-DETAILED3			
REVISIONS 1			
REVISIONS 2			
REVISIONS 3			
REVISIONS 4			
FIELD CHANGES			

SIGNATURE
9065
P.E. NUMBER
6/17/2013
DATE

STATE OF MAINE
EVAN C. LOWELL
NO. 9065
LICENSED
PROFESSIONAL ENGINEER
Evan C. Lowell
6-17-13

MARTIN MEMORIAL BRIDGE
ANDROSCOGGIN RIVER
RUMFORD OXFORD COUNTY

ABUTMENT 1 PLAN

STATE OF MAINE
DEPARTMENT OF TRANSPORTATION

BH-1510(500)X

WIN
BRIDGE NO. 3248 15105.00 BRIDGE PLANS

SHEET NUMBER 64 OF 95

Trans Systems

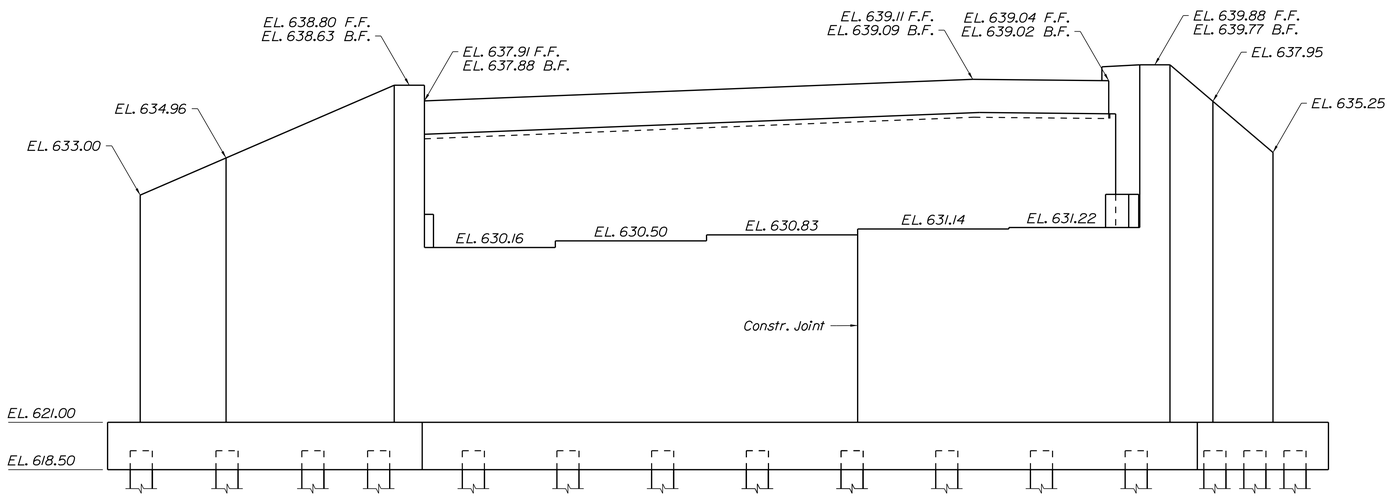

ABUTMENT NO. 1 ELEVATION

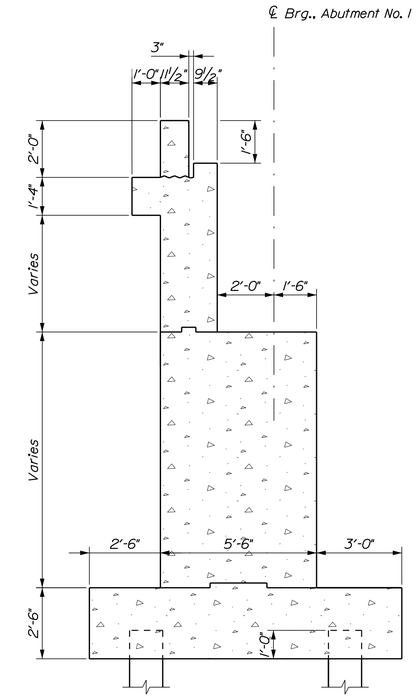

ABUTMENT NO. 1 TYPICAL SECTION

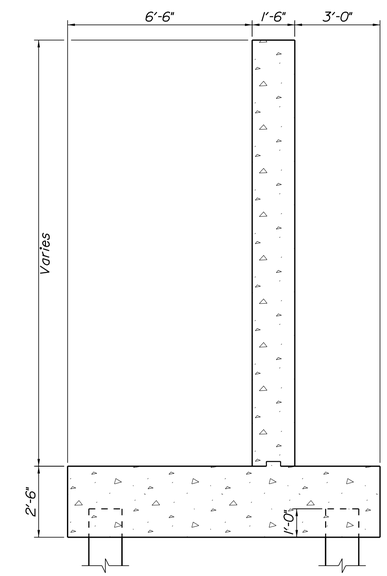

WINGWALL SECTION

Tran Systems

STATE OF MAINE
DEPARTMENT OF TRANSPORTATION

BH-1510(500)X

WIN 15105.00

BRIDGE NO. 3248

BRIDGE PLANS

STATE OF MAINE
EVAN C. LOWELL
NO. 9065
LICENSED
PROFESSIONAL ENGINEER

6-17-13

PROJ. MANAGER	S. BODGE		
DESIGN-DETAILED	C.GAMACHE	T.SANDELL	12/2012
CHECKED-REVIEWED	E.LOWELL	M.D'ANGELO	12/7/12
DESIGN2-DETAILED2			
DESIGN3-DETAILED3			
REVISIONS 1			
REVISIONS 2			
REVISIONS 3			
REVISIONS 4			
FIELD CHANGES			

SIGNATURE

9065
P.E. NUMBER

6/17/2013
DATE

MARTIN MEMORIAL BRIDGE
ANDROSCOGGIN RIVER
RUMFORD OXFORD COUNTY

ABUTMENT 1
ELEVATION & SECTIONS

SHEET NUMBER
65
OF 95

Filename: ...\0030\Road\065_Abutment 1.dgn Division: BRIDGE Username: T SANDELL Date:6/17/2013

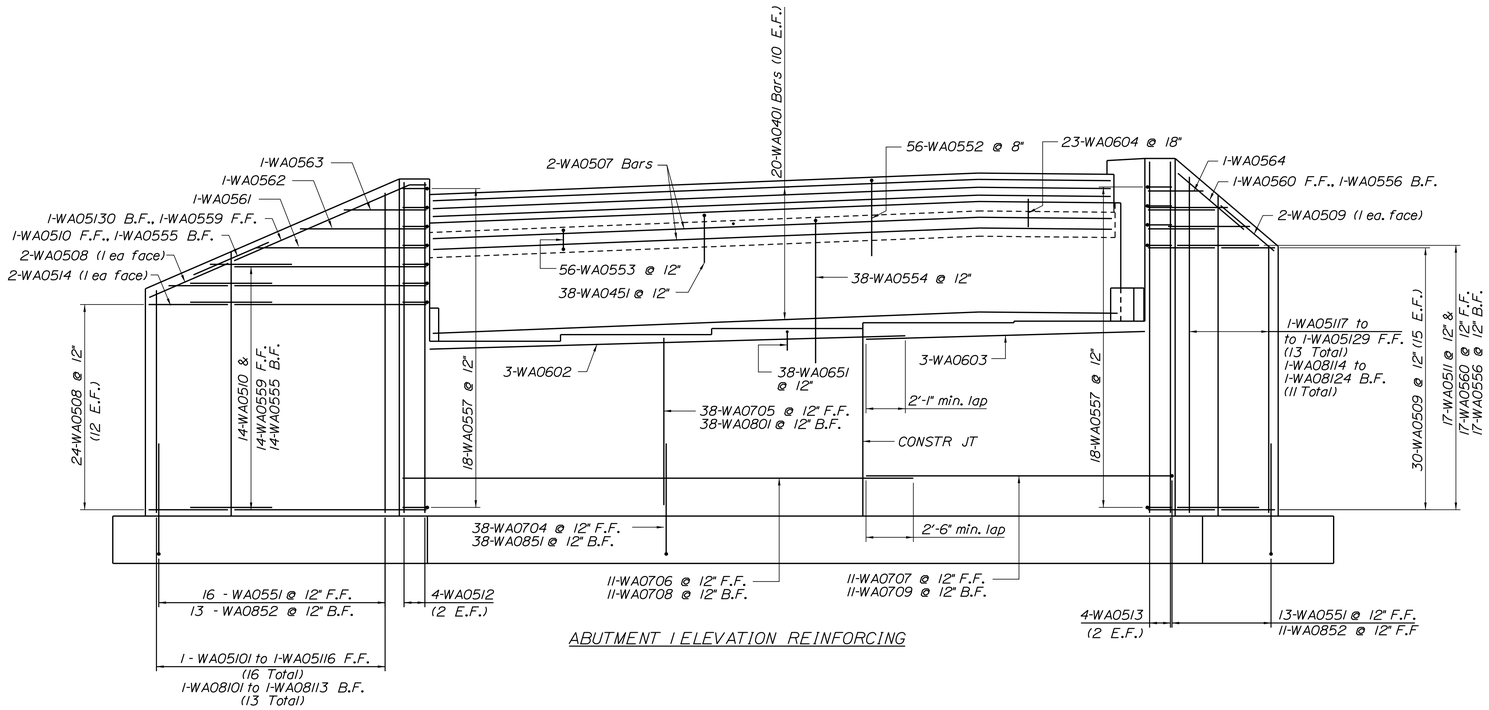

ABUTMENT 1 ELEVATION REINFORCING

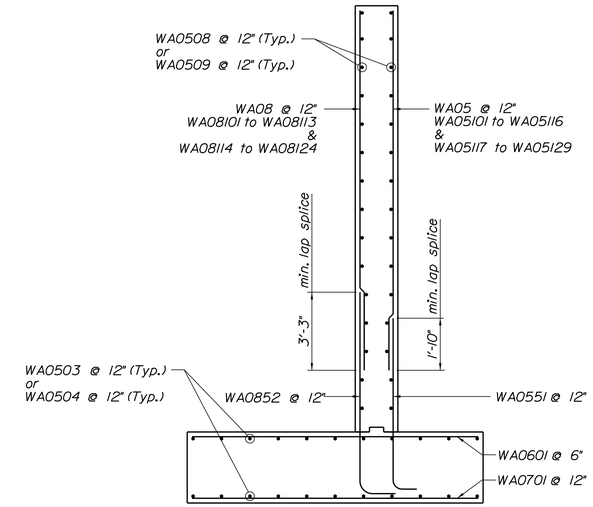

WINGWALL TYPICAL REINFORCING

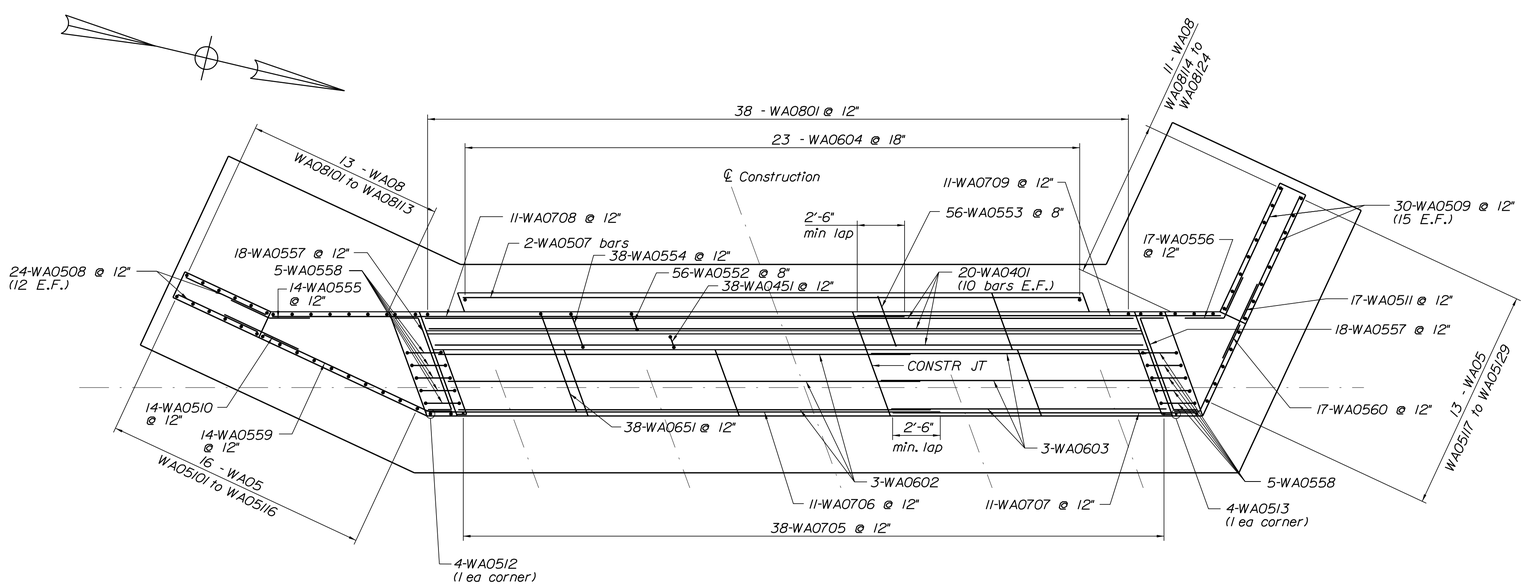

ABUTMENT 1 PLAN REINFORCING

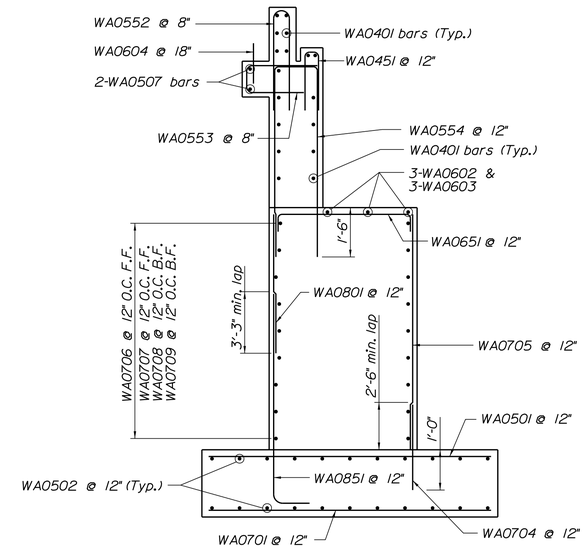

ABUTMENT 1 REINFORCING

TranSystems

STATE OF MAINE
DEPARTMENT OF TRANSPORTATION

BH-1510(500)X

WIN 15105.00

BRIDGE NO. 3248

BRIDGE PLANS

STATE OF MAINE
EVAN C. LOWELL
NO. 9065
PROFESSIONAL ENGINEER

6-17-13

PROJ. MANAGER	S. BODGE		
DESIGN-DETAILED	C.GAMACHE	T.SANDELL	12/2012
CHECKED-REVIEWED	E.LOWELL	M.D'ANGELO	12/7/12
DESIGN2-DETAILED2			
DESIGN3-DETAILED3			
REVISIONS 1			
REVISIONS 2			
REVISIONS 3			
REVISIONS 4			
FIELD CHANGES			

SIGNATURE
9065
P.E. NUMBER
6/17/2013
DATE

MARTIN MEMORIAL BRIDGE
ANDROSCOGGIN RIVER
RUMFORD OXFORD COUNTY

ABUTMENT 1
REINFORCING

SHEET NUMBER
66
OF 95

Filename: ...\066_Abutment 1 Reinforcing.dgn Division: BRIDGE Username: T SANDELL Date:6/17/2013

Note
1. See sheet 63 for Abutment and Pile notes.

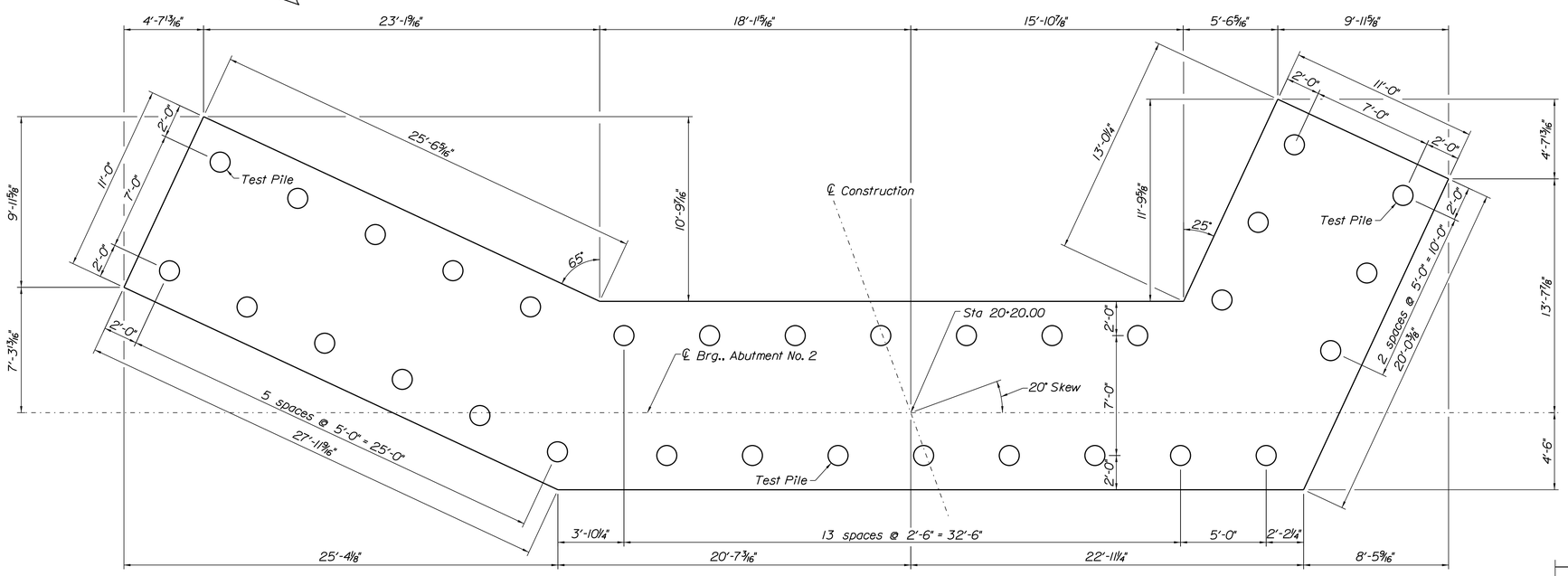

ABUTMENT NO. 2 FOOTING PLAN

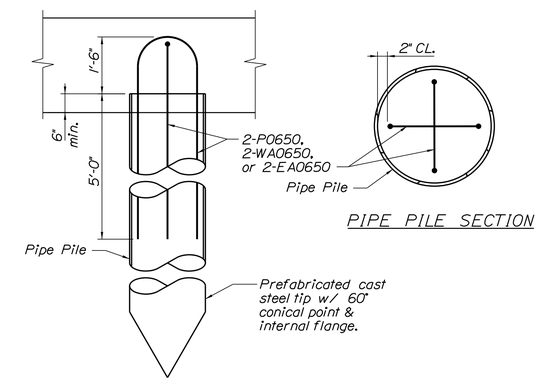

PIPE PILE SECTION

PIPE PILE ELEVATION
(Typ. for Abutments 1 & 2 and Piers 1 & 2)

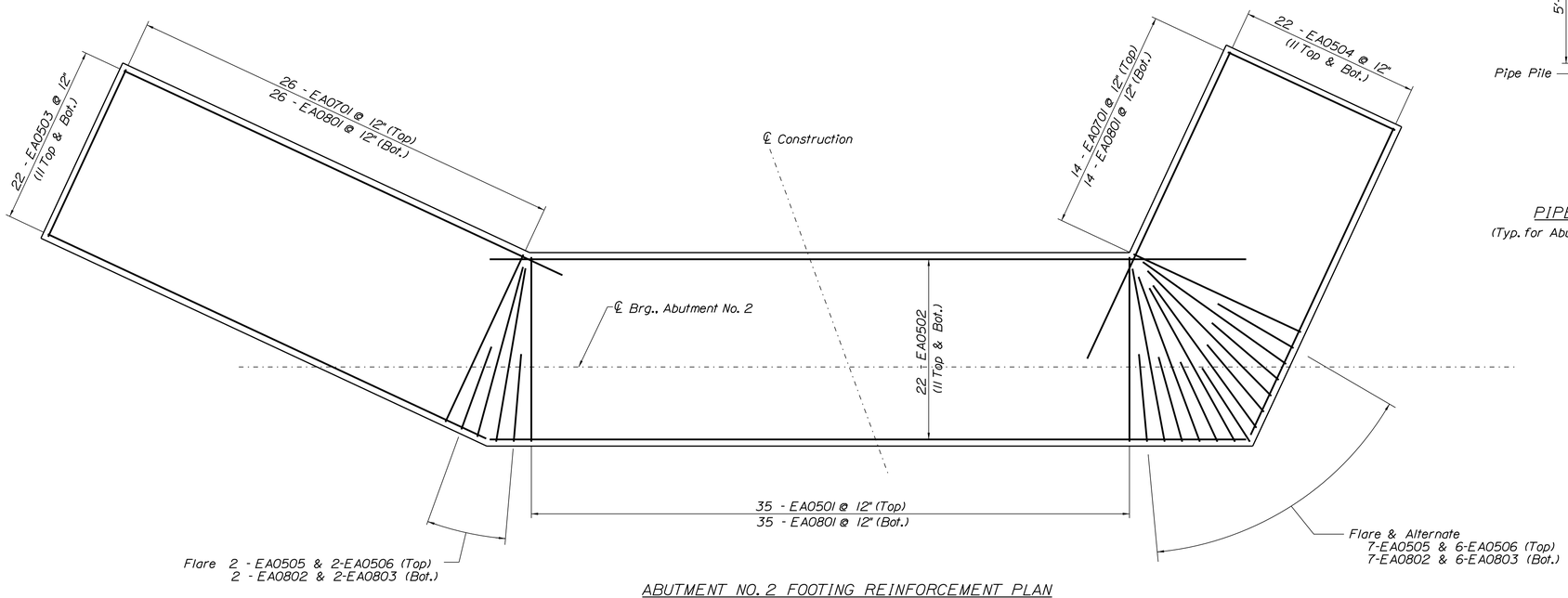

ABUTMENT NO. 2 FOOTING REINFORCEMENT PLAN

STATE OF MAINE
DEPARTMENT OF TRANSPORTATION

BH-1510(500)X

WIN 15105.00

BRIDGE NO. 3248

BRIDGE PLANS

STATE OF MAINE
EVAN C. LOWELL
NO. 9065
LICENSED PROFESSIONAL ENGINEER
6-17-13

SIGNATURE		
9065		
P.E. NUMBER		
6/17/2013		
DATE		

PROJ. MANAGER	S. BODGE	BY	DATE
DESIGN-DETAILED	C. GAMACHE	D. HODGES	9/12
CHECKED-REVIEWED	E. LOWELL	T. STUDRIS	9/12
DESIGN2-DETAILED2	B. BOYACI	J. NEARY	9/12
DESIGN3-DETAILED3			
REVISIONS 1			
REVISIONS 2			
REVISIONS 3			
REVISIONS 4			
FIELD CHANGES			

MARTIN MEMORIAL BRIDGE
ANDROSCOGGIN RIVER
RUMFORD OXFORD COUNTY

ABUTMENT 2 FOOTING PLAN

SHEET NUMBER
67
OF 95

TranSystems

Filename: ...\Road\067_Abut_2_Footing.dgn Division: BRIDGE Username: T SANDELL Date:6/17/2013

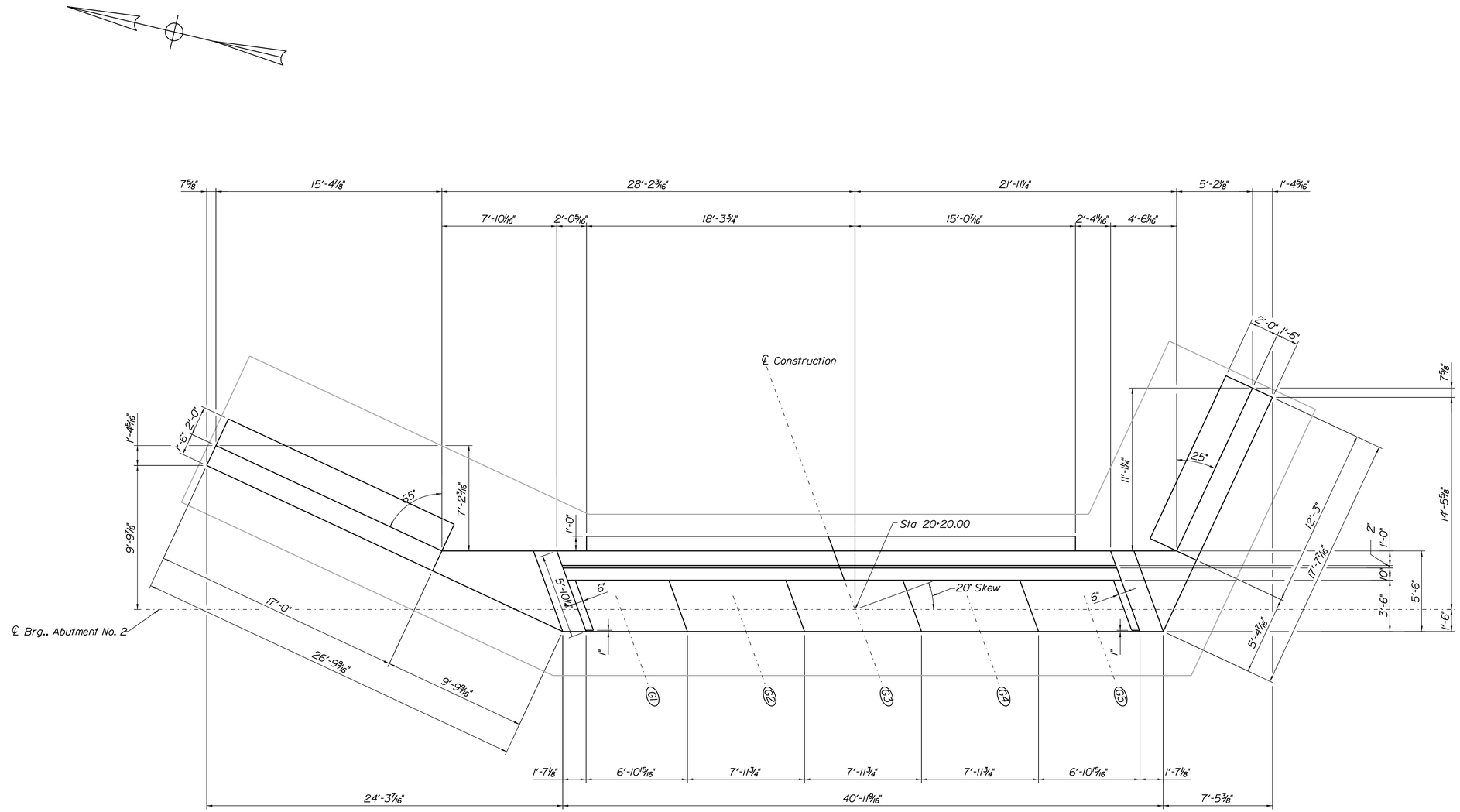

ABUTMENT NO. 2 PLAN

STATE OF MAINE
DEPARTMENT OF TRANSPORTATION

BH-1510(500)X

WIN 15105.00

BRIDGE NO. 3248

BRIDGE PLANS

STATE OF MAINE
EVAN C. LOWELL
NO. 9065
PROFESSIONAL ENGINEER

Evan Lowell 6-17-13

PROJ. MANAGER	S. BODGE	BY	DATE
DESIGN-DETAILED	C. GAMACHE	D. HODGES	9/12
CHECKED-REVIEWED	E. LOWELL	T. STUOPIS	9/12
DESIGN2-DETAILED2	B. BOYACI	J. NEARY	9/12
DESIGN3-DETAILED3			
REVISIONS 1			
REVISIONS 2			
REVISIONS 3			
REVISIONS 4			
FIELD CHANGES			

SIGNATURE

9065
P.E. NUMBER

6/17/2013
DATE

MARTIN MEMORIAL BRIDGE
ANDROSCOGGIN RIVER
RUMFORD OXFORD COUNTY

ABUTMENT 2 PLAN

SHEET NUMBER

68

OF 95

TranSystems

Filename: ...\0030\Road\068_Abut_2_Plan.dgn Division: BRIDGE Username: T SANDELL Date:6/17/2013

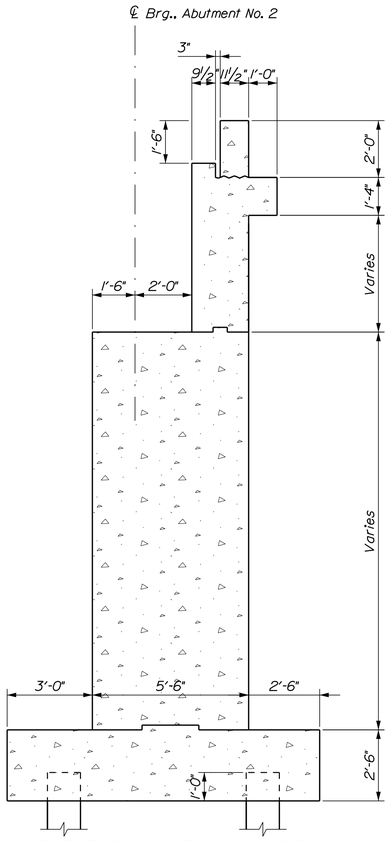

ABUTMENT NO. 2 TYPICAL SECTION

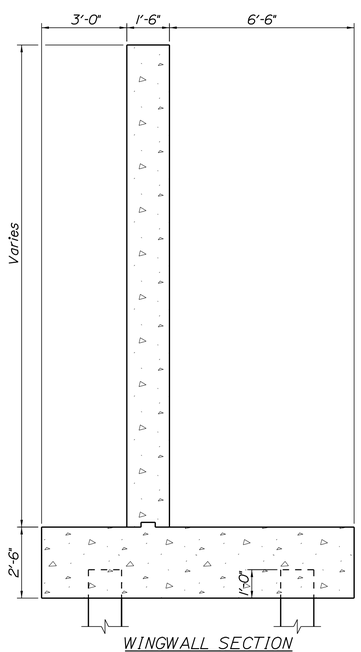

WINGWALL SECTION

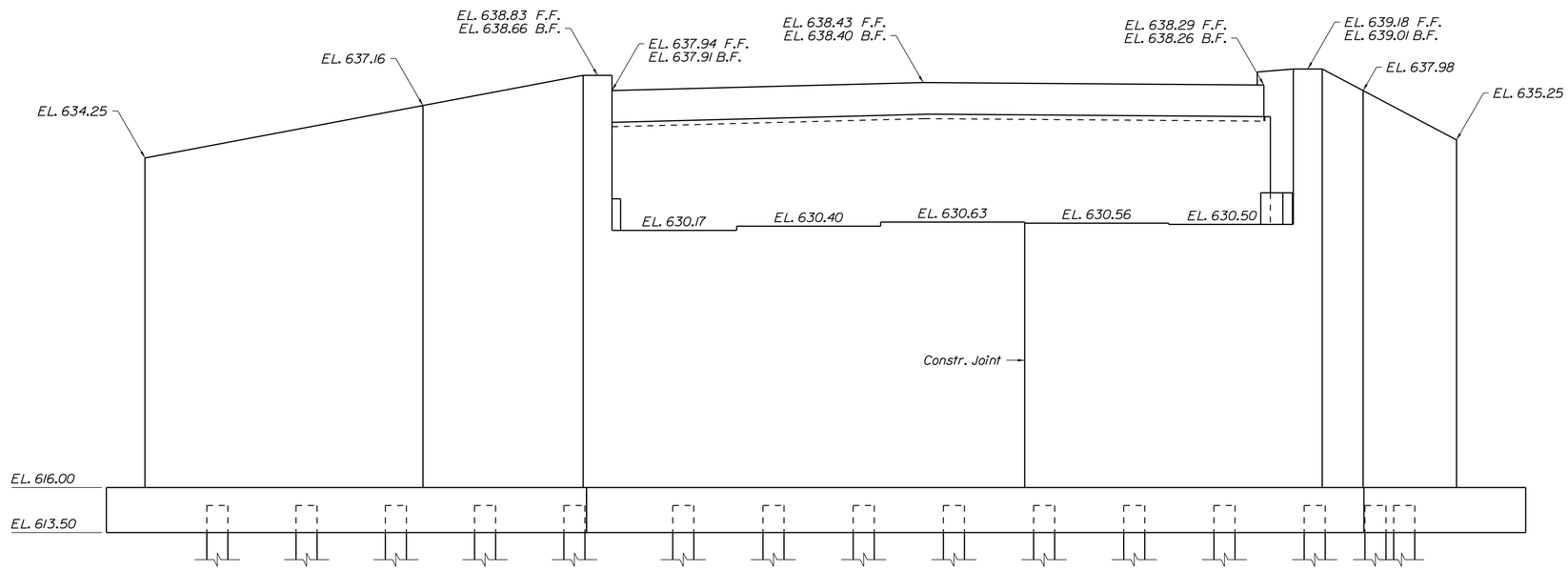

ABUTMENT NO. 2 ELEVATION

Tran Systems

STATE OF MAINE
DEPARTMENT OF TRANSPORTATION

BH-1510(500)X

WIN 15105.00

BRIDGE NO. 3248

BRIDGE PLANS

STATE OF MAINE
EVAN C. LOWELL
NO. 9065
LICENSED
PROFESSIONAL ENGINEER
6-17-13

SIGNATURE			
9065			
P.E. NUMBER			
6/17/2013			
DATE			

PROJ. MANAGER	S. BODGE	BY	DATE
DESIGN-DETAILED	C.GAMACHE	T.SANDELL	12/2012
CHECKED-REVIEWED	E.LOWELL	M.D'ANGELO	12/7/12
DESIGN2-DETAILED2			
DESIGN3-DETAILED3			
REVISIONS 1			
REVISIONS 2			
REVISIONS 3			
REVISIONS 4			
FIELD CHANGES			

MARTIN MEMORIAL BRIDGE
ANDROSCOGGIN RIVER
RUMFORD OXFORD COUNTY

ABUTMENT 2
ELEVATION & SECTIONS

SHEET NUMBER
69
OF 95

Filename: ...\0030\Road\069_Abutment 2.dgn Division: BRIDGE Username: T SANDELL Date:6/17/2013

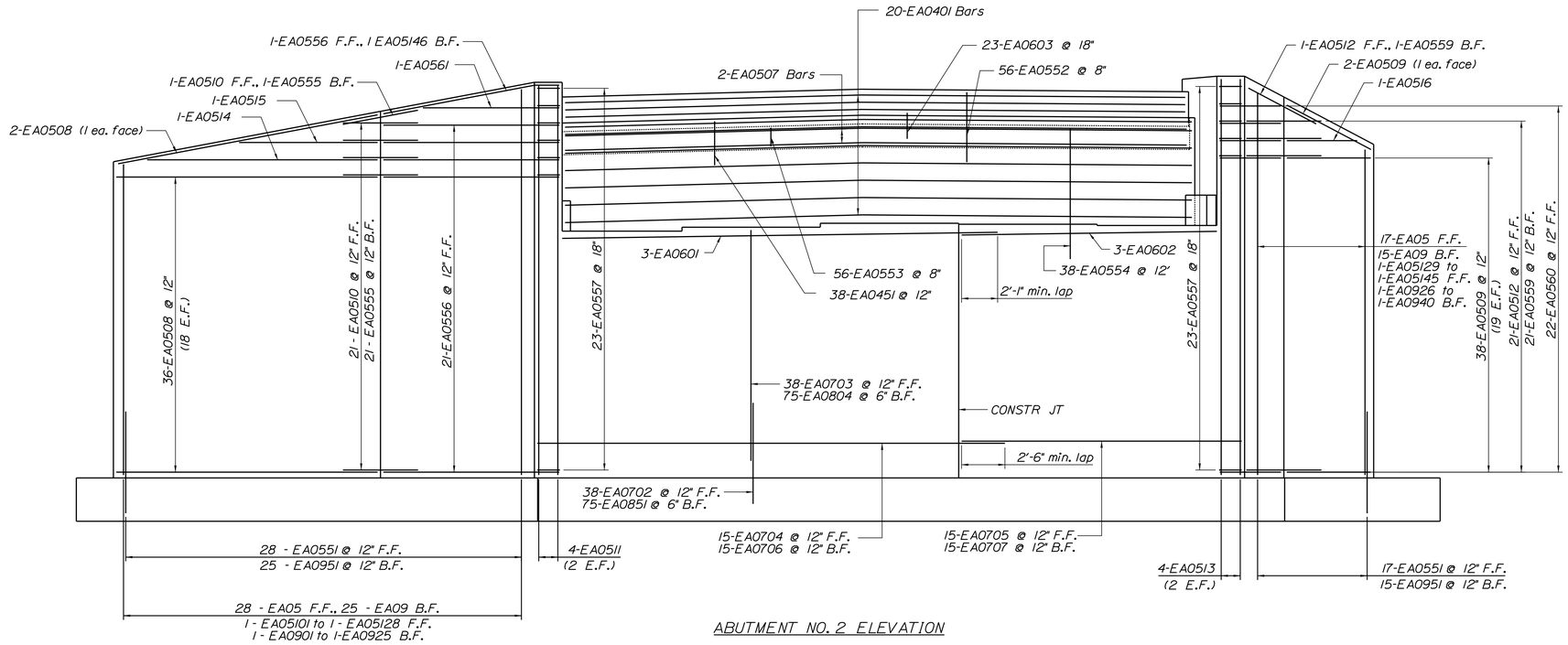

ABUTMENT NO. 2 ELEVATION

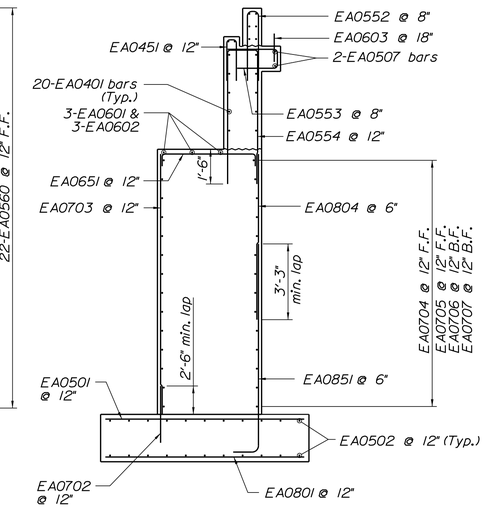

ABUTMENT NO. 2 REINFORCEMENT SECTION

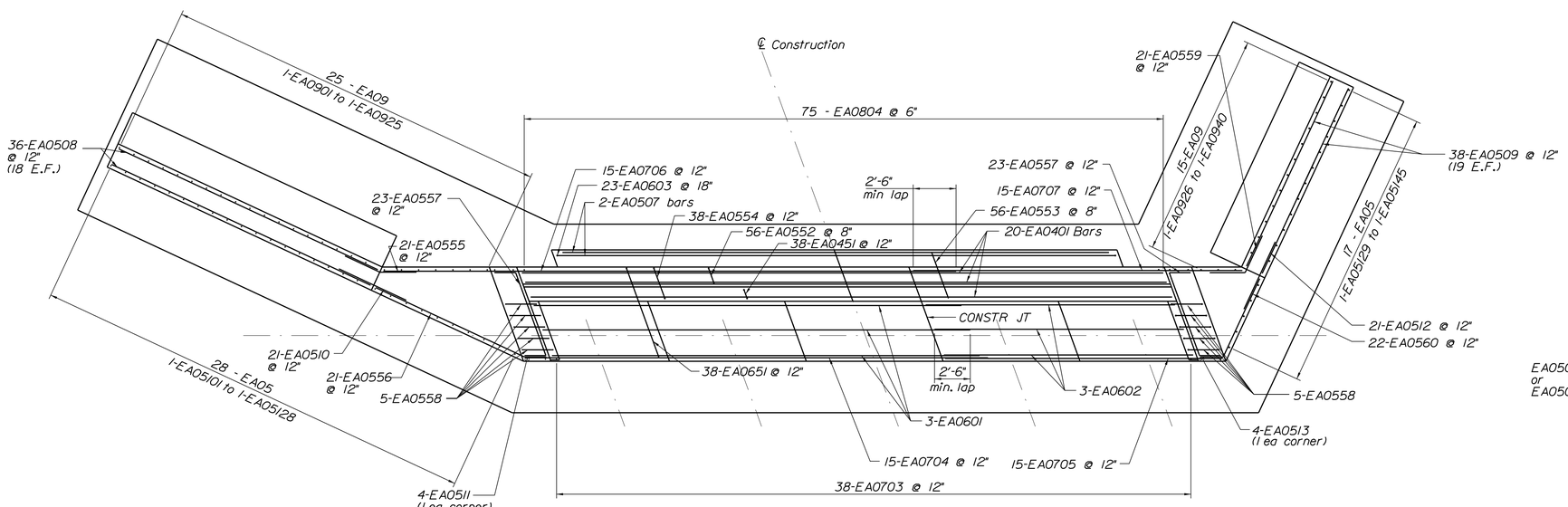

ABUTMENT NO. 2 PLAN

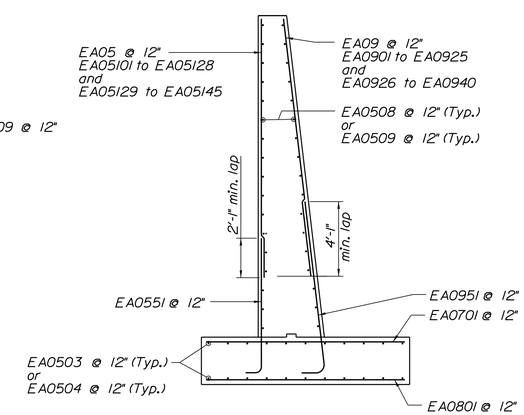

ABUTMENT NO. 2 WINGWALL REINFORCEMENT

TranSystems

STATE OF MAINE
DEPARTMENT OF TRANSPORTATION

BH-1510(500)X

WIN 15105.00

BRIDGE NO. 3248

BRIDGE PLANS

STATE OF MAINE EVAN C. LOWELL NO. 9065 PROFESSIONAL ENGINEER 6-17-13

	BY	DATE
PROJ. MANAGER S. BODGE		
DESIGN-DETAILED	T. SANDELL	12/2012
CHECKED-REVIEWED	M.D'ANGELO	12/7/12
DESIGN2-DETAILED2		
DESIGN3-DETAILED3		
REVISIONS 1		
REVISIONS 2		
REVISIONS 3		
REVISIONS 4		
FIELD CHANGES		

SIGNATURE

9065
P.E. NUMBER

6/17/2013
DATE

MARTIN MEMORIAL BRIDGE
ANDROSCOGGIN RIVER
RUMFORD OXFORD COUNTY

ABUTMENT 2
REINFORCING

SHEET NUMBER

70

OF 95

Filename: ...\070_Abutment 2 Reinforcing.dgn Division: BRIDGE Username: T SANDELL Date:6/17/2013

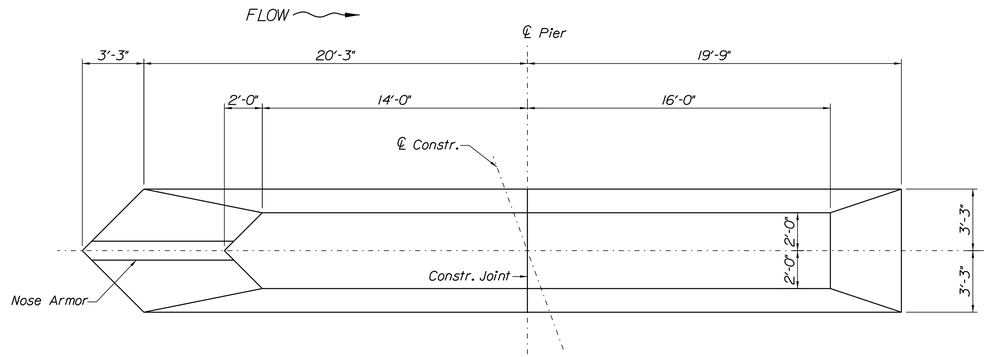

PIER SHAFT PLAN

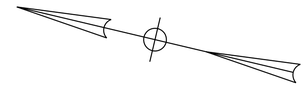

Seal Cofferdam Notes

1. The seal concrete placement dimensions shown represent the minimum seal size necessary to meet design requirements and are not based on the use of any particular sheet pile section.
2. The horizontal pay limit for seal concrete will be to the dimensions shown on the plans. No additional payment will be made for concrete placed outside of these limits.
3. When sheet piling is used for seal cofferdams, appropriate rolled corners shall be used, and the inside face of the sheet piling shall be at or outside of the seal concrete dimensions shown.
4. The depth of the seal is set for a water elevation of 613.1 ft. If the water elevation at the time of construction is higher, the depth of the seal shall be adjusted at no additional cost to the Department.
5. Tremie seal shall be paid under Item No. 502.24, Structural Concrete Piers (Placed Under Water).
6. See sheet 63 for Pier Pile Notes.

Design Criteria

1. Critical AASHTO Loading: Strength.
2. Buoyancy: Water level assumed at Elevation 625.7 ft.
3. Stream flow: Velocity of 4.5 ft/sec skewed at 0° to longitudinal centerline of pier.
4. Wind: 85 mph.
5. Ice: Thickness 2 feet:
   - Load Case 1: Pressure 100 psi at Elevation 623.9 ft
   - Load Case 2: Pressure 200 psi at Elevation 613.1 ft
   - 30% of nose force applied transverse to pier

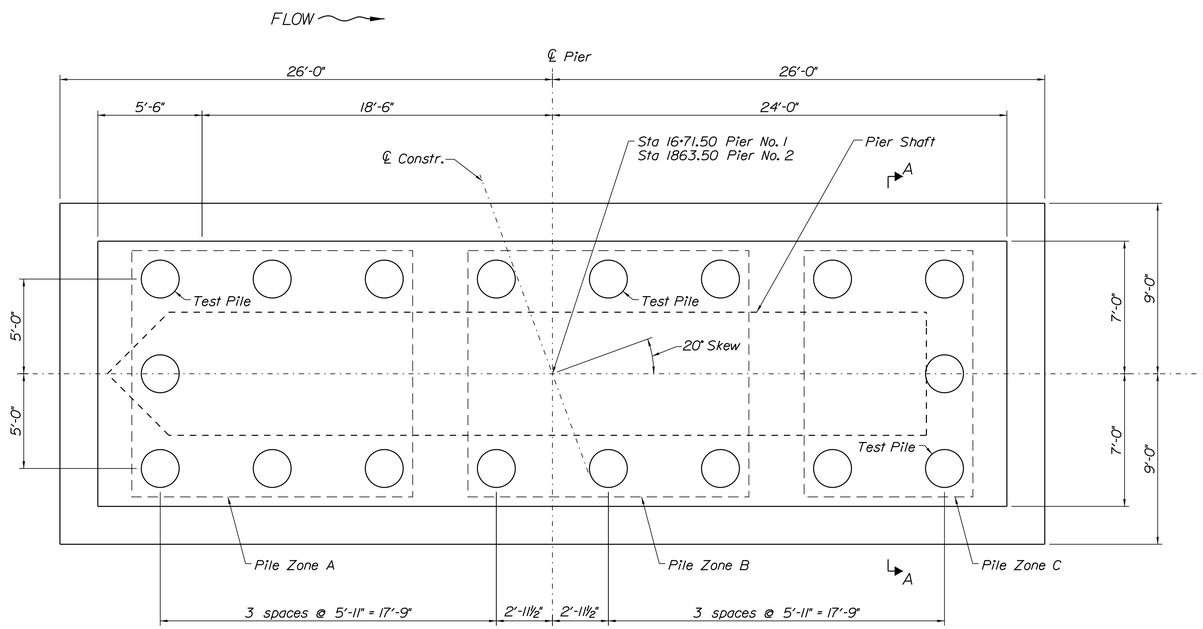

PIER PILE CAP PLAN

Substructure Location	Estimated Min. Pile Tip Elevations		
	Pile Zone A	Pile Zone B	Pile Zone C
Pier 1	EL.485	EL.495	EL.505
Pier 2	EL.510	EL.520	EL.530

Note: Estimate minimum pile tip elevations shown are required to resist all loading combinations and consider the estimated scour depths.

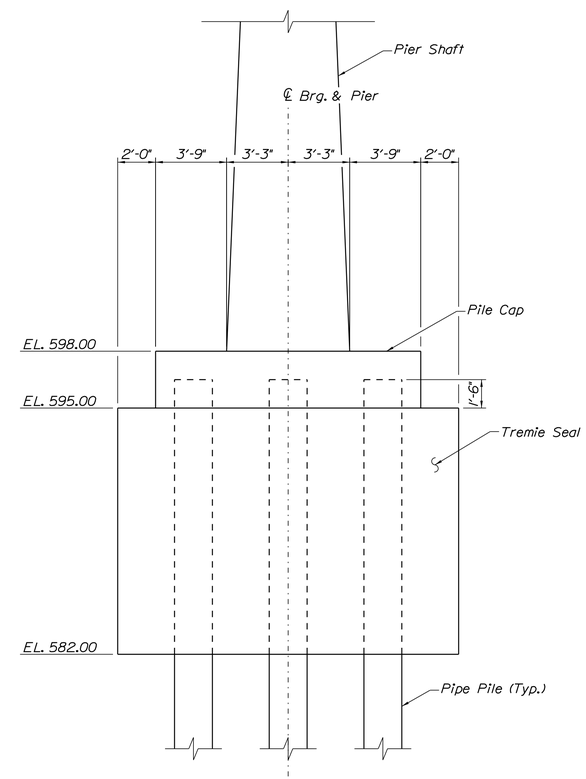

SECTION A-A - PILE CAP AND CONCRETE SEAL

TranSystems

STATE OF MAINE
DEPARTMENT OF TRANSPORTATION

BH-1510(500)X

WIN 15105.00

BRIDGE NO. 3248

BRIDGE PLANS

STATE OF MAINE
EVAN C. LOWELL
NO. 9065
PROFESSIONAL ENGINEER
6-17-13

PROJ. MANAGER	S. BOOGE	BY	DATE
DESIGN-DETAILED	J.MUCHA	D. HODGES	12/12
CHECKED-REVIEWED	E. LOWELL	M.D'ANGELO	12/12
DESIGN2-DETAILED2			
DESIGN3-DETAILED3			
REVISIONS 1			
REVISIONS 2			
REVISIONS 3			
REVISIONS 4			
FIELD CHANGES			

SIGNATURE
9065
P.E. NUMBER
6/17/2013
DATE

MARTIN MEMORIAL BRIDGE
ANDROSCOGGIN RIVER
RUMFORD OXFORD COUNTY

PIER PILE CAP PLAN & SECTION

SHEET NUMBER
71
OF 95

Filename: ...\0030\Road\071_Pier Cap P&P.dgn Division: BRIDGE Username: T SANDELL Date:6/17/2013

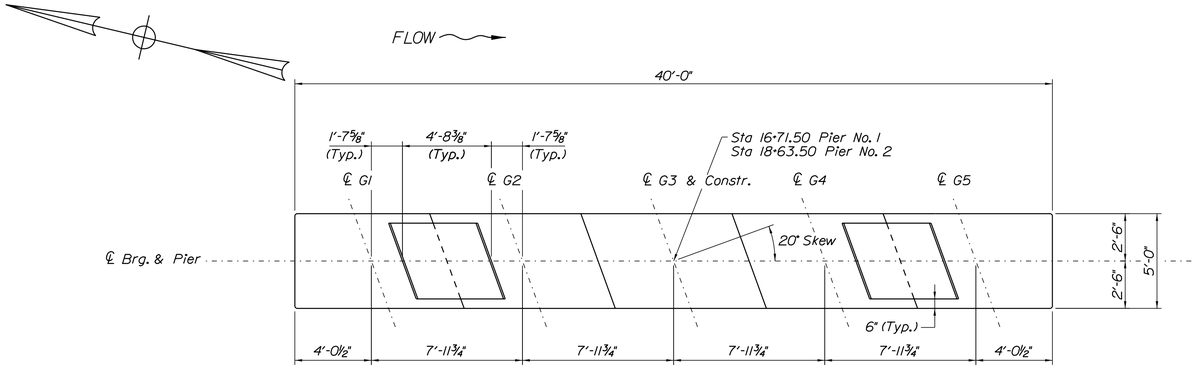

PIER CAP PLAN

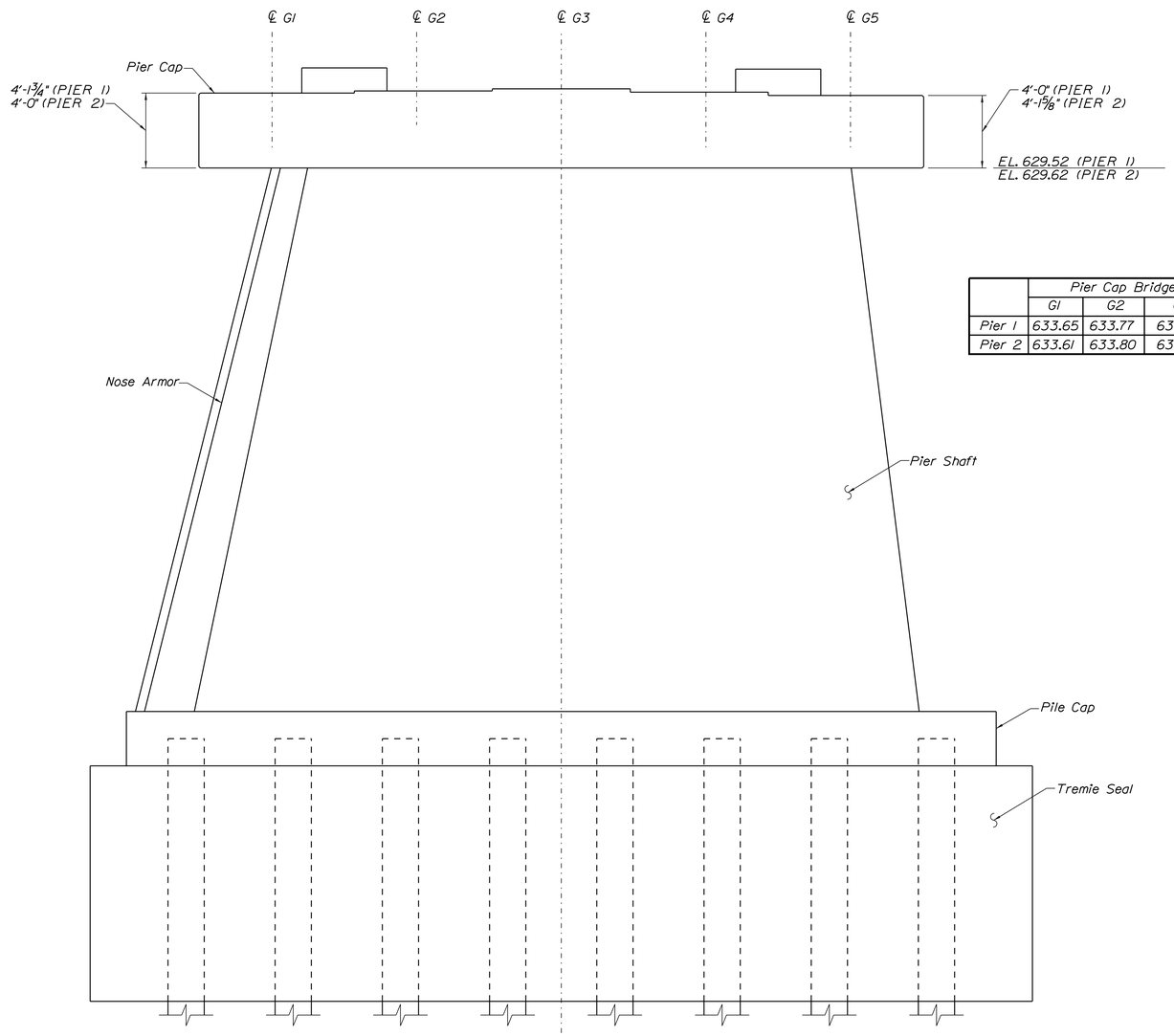

	Pier Cap Bridge Seat Elevations				
	G1	G2	G3	G4	G5
Pier 1	633.65	633.77	633.88	633.69	633.51
Pier 2	633.61	633.80	633.98	633.86	633.75

PIER ELEVATION

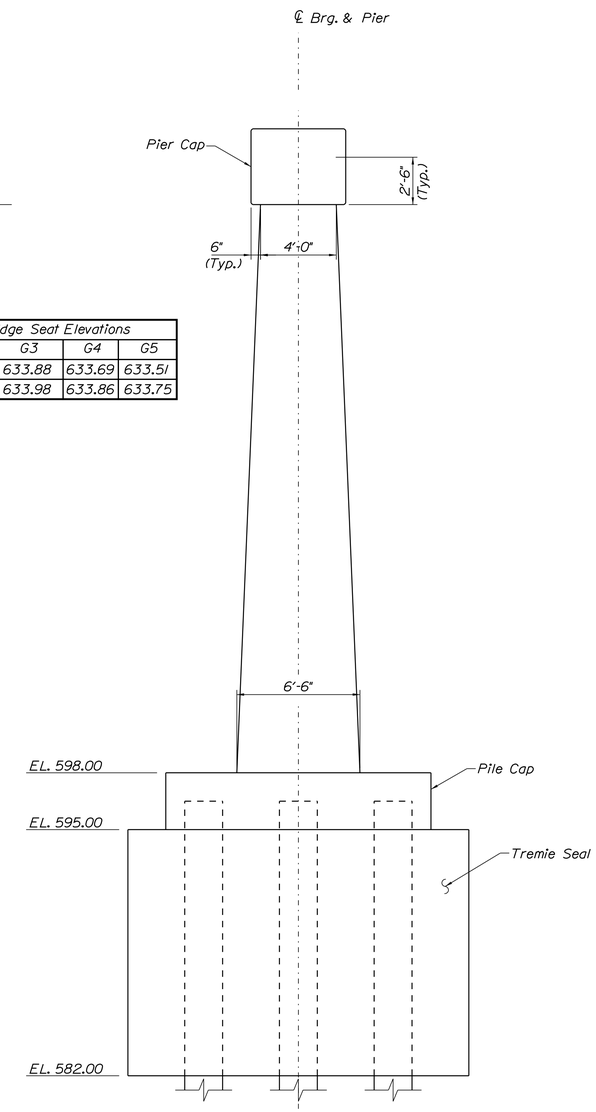

PIER END ELEVATION

TranSystems

STATE OF MAINE
DEPARTMENT OF TRANSPORTATION

BH-1510(500)X

WIN 15105.00

BRIDGE NO. 3248

BRIDGE PLANS

STATE OF MAINE EVAN C. LOWELL NO. 9065 PROFESSIONAL ENGINEER

6-17-13

PROJ. MANAGER	S. BIDGE		
DESIGN-DETAILED	J.MUCHA	D. HODGES	12/12
CHECKED-REVIEWED	E. LOWELL	M.D'ANGELO	12/12
DESIGN2-DETAILED2			
DESIGN3-DETAILED3			
REVISIONS 1			
REVISIONS 2			
REVISIONS 3			
REVISIONS 4			
FIELD CHANGES			

SIGNATURE
9065 P.E. NUMBER
6/17/2013 DATE

MARTIN MEMORIAL BRIDGE
ANDROSCOGGIN RIVER
RUMFORD OXFORD COUNTY

PIER PLAN, ELEVATION & REINFORCING

SHEET NUMBER
72
OF 95

Filename: ...\0030\Road\072_Pier P&P.dgn Division: BRIDGE Username: T SANDELL Date:6/17/2013

Pier Notes

1. Reinforcing steel shall have a minimum concrete cover of 3 inches unless otherwise noted.
2. Nose and keeper block armor, including anchor studs, shall be cleaned and galvanized in accordance with Section 506 of the Contract Special Provisions and included in Pay Item No. 502.239: Structural Concrete Piers.

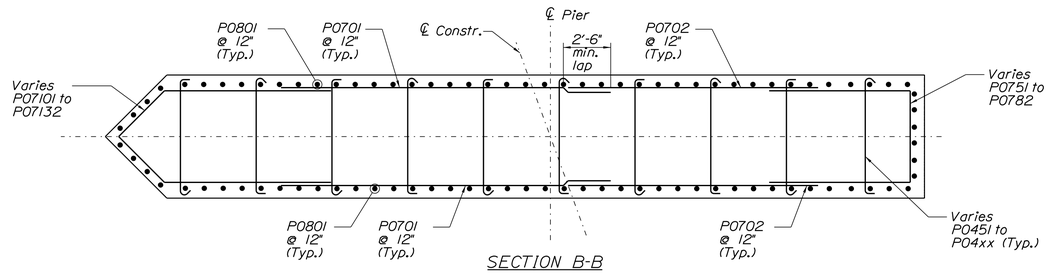

SECTION B-B

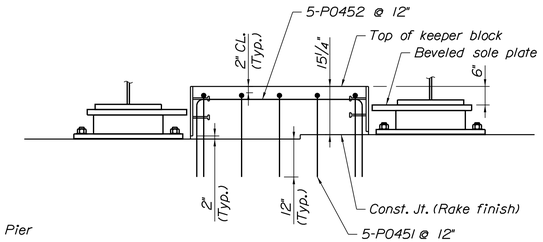

KEEPER BLOCK SECTION

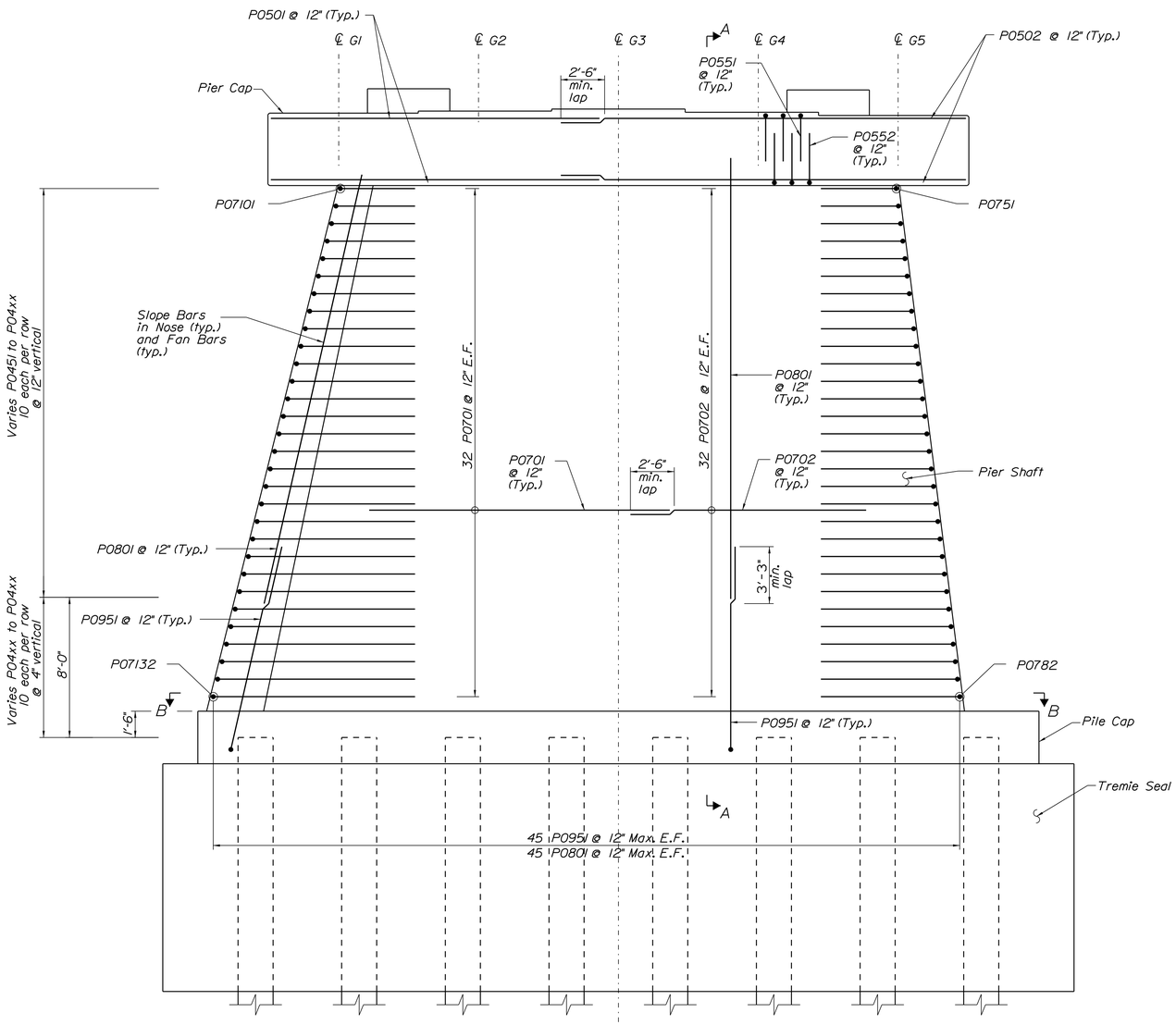

PIER ELEVATION

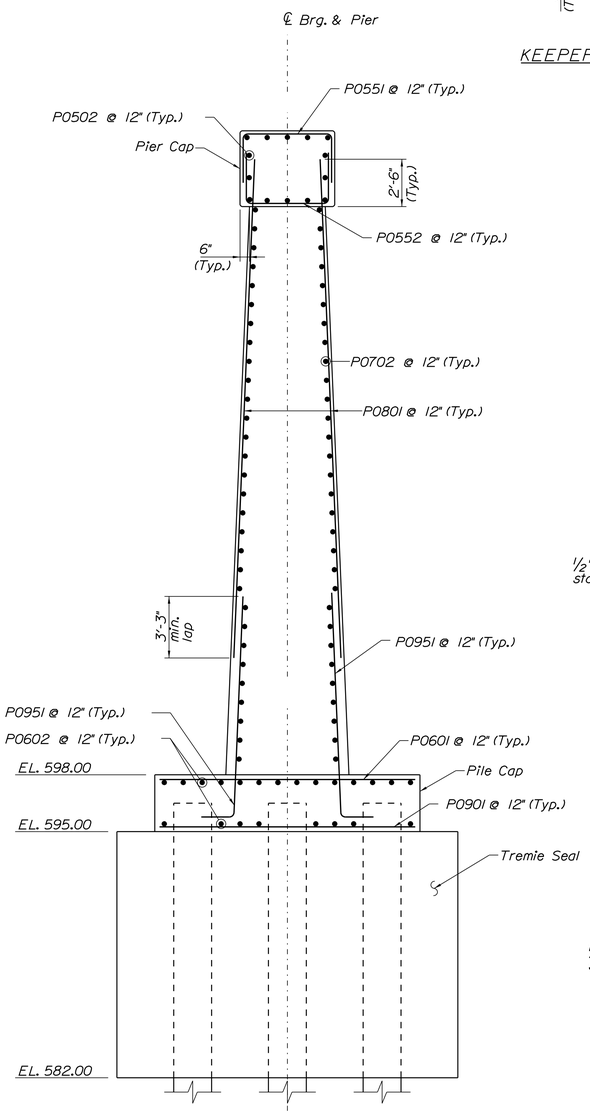

PIER END ELEVATION

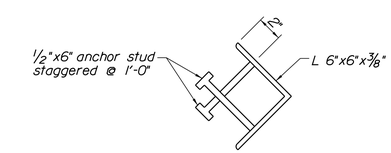

NOSE ARMOR DETAIL

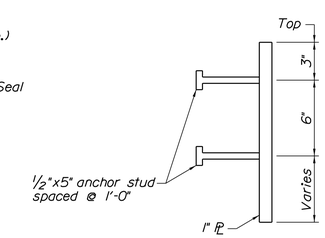

KEEPER BLOCK ARMOR DETAIL

STATE OF MAINE
DEPARTMENT OF TRANSPORTATION

BH-1510(500)X

WIN 15105.00

BRIDGE NO. 3248

BRIDGE PLANS

STATE OF MAINE EVAN C. LOWELL NO. 9065 PROFESSIONAL ENGINEER

6-17-13

PROJ. MANAGER	S. BRIDGE	BY	DATE
DESIGN-DETAILED	J.MUCHA	D. HODGES	12/12
CHECKED-REVIEWED	E. LOWELL	M.D'ANGELO	12/12
DESIGN2-DETAILED2			
DESIGN3-DETAILED3			
REVISIONS 1			
REVISIONS 2			
REVISIONS 3			
REVISIONS 4			
FIELD CHANGES			

SIGNATURE
9065
P.E. NUMBER
6/17/2013
DATE

MARTIN MEMORIAL BRIDGE
ANDROSCOGGIN RIVER
RUMFORD OXFORD COUNTY

PIER REINFORCING

SHEET NUMBER
73
OF 95

Filename: ...\Road\073_Pier Reinforcing.dgn Division: BRIDGE Username: T SANDELL Date:6/17/2013

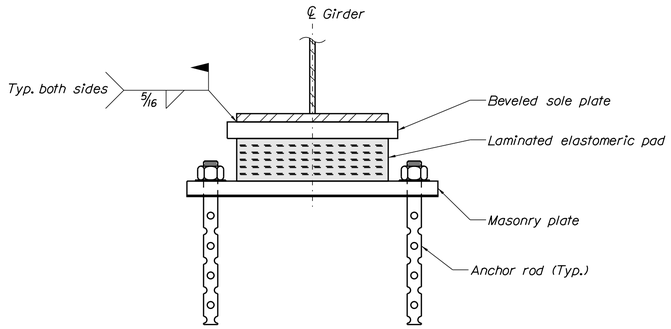

BEARING ELEVATION

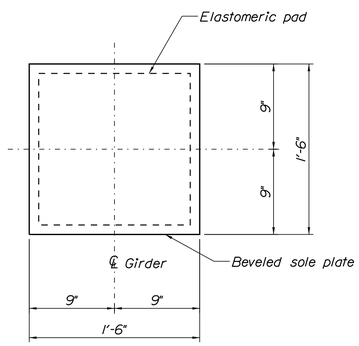

SOLE PLATE PLAN
Looking up at bottom of Sole Plate

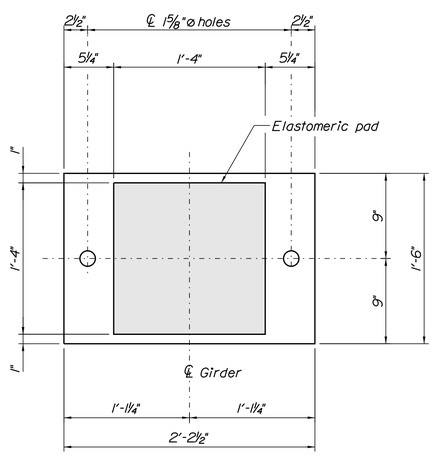

EXPANSION MASONRY PLATE PLAN
Showing laminated elastomeric pad

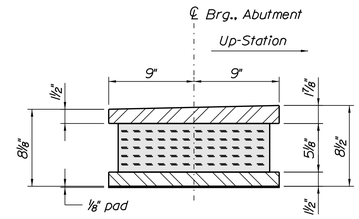

WEST ABUTMENT BEARING SECTION

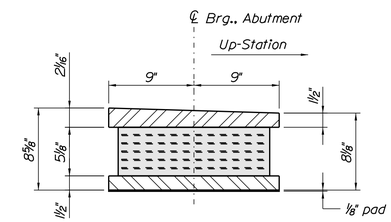

EAST ABUTMENT BEARING SECTION

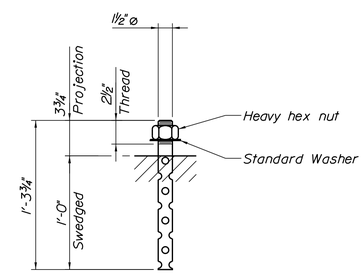

ANCHOR ROD DETAIL

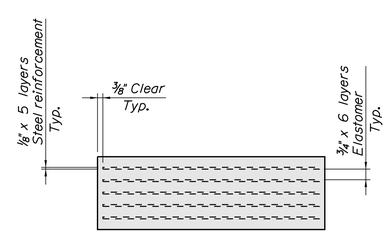

ELASTOMERIC PAD SECTION

ELASTOMERIC BEARING NOTES

1. The elastomer shall be 100% neoprene.
2. The shear modulus of the elastomer shall be 150 lb/in² +/- 15%.
3. Masonry plates shall meet the requirements of ASTM A 709/A 709M, Grade 50.
4. Sole plates and plate washers shall meet the requirements of ASTM A 709/A 709M, Grade 50W.
5. Anchor rods shall meet the requirements of ASTM F 1554, Grade 105 and shall be swedged on the embedded portion of the rod.
6. Heavy hex nuts for anchor rods shall meet the requirements of ASTM A 563, Class 5.
7. Masonry and sole plates shall be galvanized in accordance with Section 506. Anchor rods, washers, and nuts shall be galvanized to ASTM A 153 or ASTM b 695, Class 50, Type 1.
8. Vulcanizing of the elastomer to the steel plates shall be done during the primary mold process.
9. All bearings shall be marked prior to shipping. The marks shall include the bearing location on the bridge and the direction arrow that points upstation. All marks shall be permanent and shall be visible after the bearing is installed.
10. Bearings shall be covered during transit.
11. The bearings are designed so that the superstructure may be erected when the ambient air temperature is within range of 65 °F and 90 °F. If the ambient air temperature is outside this range, the bearings shall be reset as directed by the Resident.
12. All necessary precautions shall be taken to protect bearing components from field weld flash and spatter. Heat from welding operations shall be controlled such that steel adjacent to the elastomer does not exceed 200 °F. The temperature shall be verified by the use of temperature indicating crayons or other suitable means.
13. After the sole plate has been welded to the structural steel, the anchor rods, the plate washers, and the exposed surface of the sole plates, including the anchor bolt holes, shall betreated with a dielectric material as approved by the Resident.
14. Upset the threads on the anchor rods after assembly of the bearing.
15. A Preformed pad meeting the requirements of Standard Specification Subsection 713.03 shall be installed under each masonry plate. All materials and work for the installation of the pads shall be considered incidental to Pay Items No. 523.52.

ABUTMENT ELASTOMERIC BEARING LOADS (AASHTO Service I Load Combination)		
Design Loads:	DL = 100 kips	LL = 93 kips

TranSystems

STATE OF MAINE
DEPARTMENT OF TRANSPORTATION

BH-1510(500)X

WIN 15105.00

BRIDGE NO. 3248

BRIDGE PLANS

STATE OF MAINE EVAN C. LOWELL NO. 9065 PROFESSIONAL ENGINEER
6.17.13

PROJ. MANAGER	S. BRIDGE	BY	DATE
DESIGN-DETAILED	C. CAMACHE	D. HODGES	12/12
CHECKED-REVIEWED	E. LOWELL	T. STUOPIS	12/12
DESIGN2-DETAILED2	B. BOYACI	J. NEARY	12/12
DESIGN3-DETAILED3			
REVISIONS 1			
REVISIONS 2			
REVISIONS 3			
REVISIONS 4			
FIELD CHANGES			

SIGNATURE
9065
P.E. NUMBER
6/17/2013
DATE

MARTIN MEMORIAL BRIDGE
ANDROSCOGGIN RIVER
RUMFORD OXFORD COUNTY

ABUTMENT BEARINGS

SHEET NUMBER
74
OF 95

Filename: ...\Road\074_Abut_Bearings.dgn Division: BRIDGE Username: T SANDELL Date:6/19/2013

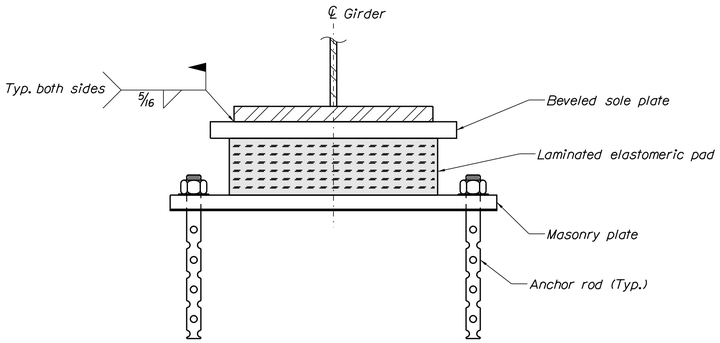

BEARING ELEVATION (GIRDER3)

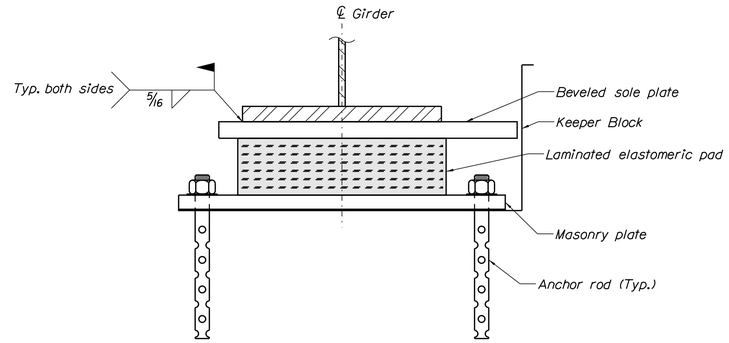

BEARING ELEVATION (GIRDERS 1, 2, 4, 5)

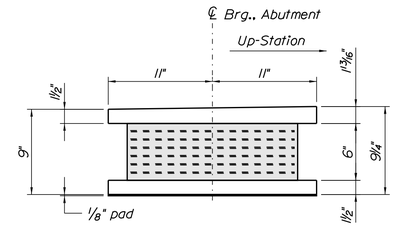

WEST PIER BEARING SECTION

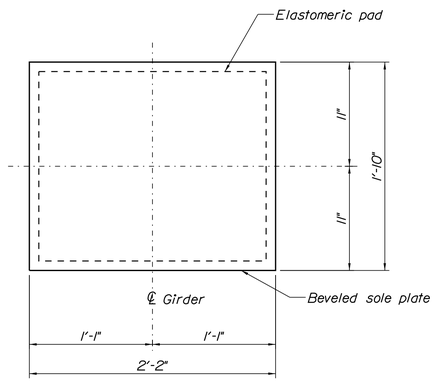

SOLE PLATE PLAN (GIRDER 3)
Looking up at bottom of Sole Plate

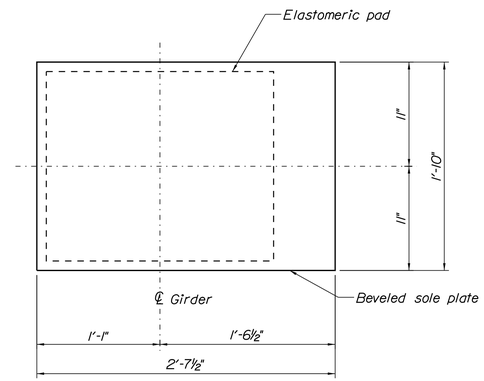

SOLE PLATE PLAN (GIRDERS 1, 2, 4, 5)
Looking up at bottom of Sole Plate

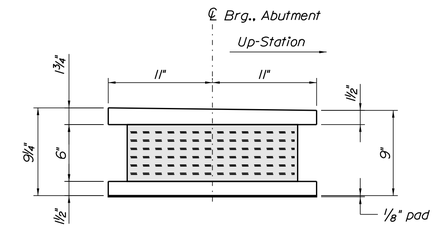

EAST PIER BEARING SECTION

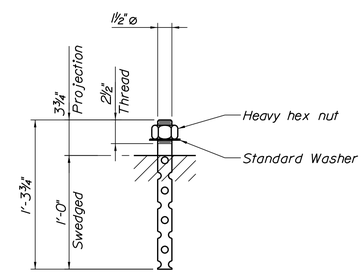

ANCHOR ROD DETAIL

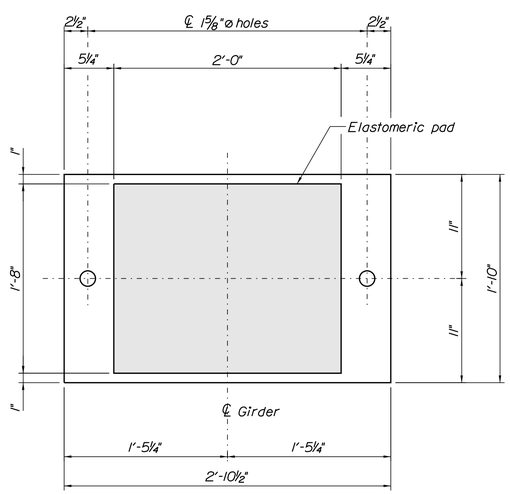

EXPANSION MASONRY PLATE PLAN
Showing laminated elastomeric pad

PIER ELASTOMERIC BEARING LOADS (AASHTO Service I Load Combination)		
Design Loads:	DL = 317 kips	LL = 216 kips

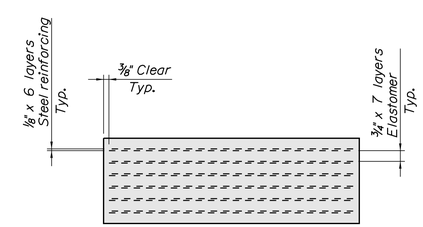

ELASTOMERIC PAD SECTION

Tran Systems

STATE OF MAINE
DEPARTMENT OF TRANSPORTATION

BH-1510(500)X

WIN 15105.00

BRIDGE NO. 3248

BRIDGE PLANS

STATE OF MAINE
EVAN C. LOWELL
NO. 9065
PROFESSIONAL ENGINEER
6-17-13

PROJ. MANAGER	S. BODGE		
DESIGN-DETAILED	C. GAMACHE	D. HODGES	12/12
CHECKED-REVIEWED	E. LOWELL	T. STUDRIS	12/12
DESIGN2-DETAILED2	B. BOYACI	J. NEARY	12/12
DESIGN3-DETAILED3			
REVISIONS 1			
REVISIONS 2			
REVISIONS 3			
REVISIONS 4			
FIELD CHANGES			

SIGNATURE
9065
P.E. NUMBER
6/17/2013
DATE

MARTIN MEMORIAL BRIDGE
ANDROSCOGGIN RIVER
RUMFORD OXFORD COUNTY

PIER BEARINGS

SHEET NUMBER
75
OF 95

Filename: ...\Road\075_Pier_Bearings.dgn Division: BRIDGE Username: T SANDELL Date:6/17/2013

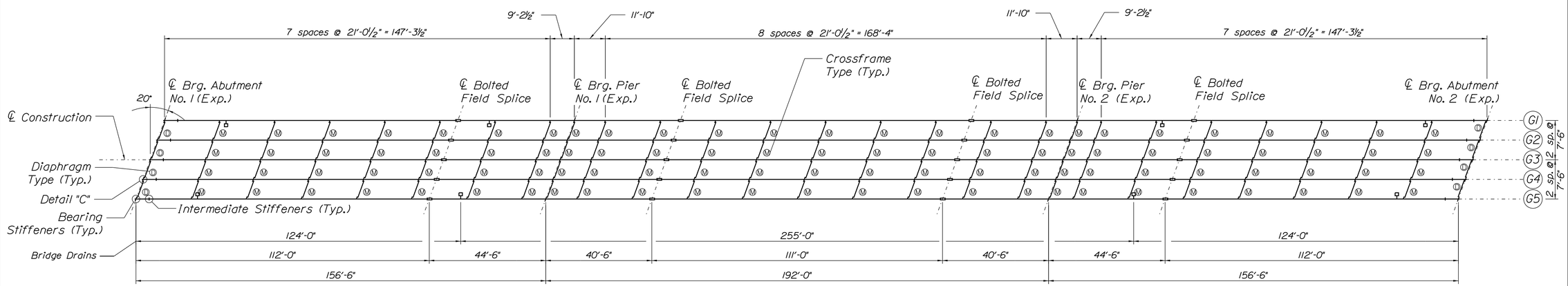

FRAMING PLAN
Dimensions are horizontal

BOTTOM OF SLAB ELEVATIONS

Girder	℄ Brg., Abut. No. 1	•15.65'	•31.30'	•46.95'	•62.60'	•78.25'	•93.90'	•109.55'	•125.20'	•140.85'	℄ Brg., Pier No. 1	•19.20'	•38.40'	•57.60'	•76.80'	•96.00'	•115.20'	•134.40'	•153.60'	•172.80'	℄ Brg., Pier No. 2	•15.65'	•31.30'	•46.95'	•62.60'	•78.25'	•93.90'	•109.55'	•125.20'	•140.85'	℄ Brg., Abut. No. 2
G1	637.72	638.25	638.73	639.15	639.51	639.80	640.02	640.20	640.34	640.51	640.69	640.92	641.13	641.30	641.42	641.45	641.41	641.29	641.10	640.89	640.66	640.47	640.27	640.06	639.80	639.50	639.14	638.71	638.21	637.65	637.04
G2	637.60	638.17	638.70	639.15	639.54	639.85	640.10	640.30	640.46	640.63	640.81	641.04	641.26	641.45	641.58	641.63	641.58	641.46	641.28	641.07	640.84	640.66	640.48	640.27	640.04	639.74	639.39	638.96	638.46	637.90	637.29
G3	637.26	637.89	638.46	638.97	639.41	639.78	640.08	640.33	640.54	640.74	640.92	641.16	641.39	641.59	641.72	641.77	641.74	641.63	641.45	641.24	641.02	640.85	640.67	640.48	640.24	639.96	639.61	639.18	638.69	638.13	637.52
G4	636.91	637.59	638.21	638.75	639.19	639.56	639.87	640.12	640.34	640.54	640.74	640.98	641.22	641.42	641.56	641.62	641.60	641.49	641.32	641.12	640.91	640.74	640.57	640.37	640.15	639.87	639.52	639.10	638.62	638.07	637.46
G5	636.54	637.25	637.92	638.49	638.94	639.32	639.64	639.90	640.14	640.35	640.55	640.80	641.04	641.24	641.38	641.45	641.43	641.34	641.18	640.99	640.79	640.62	640.45	640.26	640.03	639.75	639.40	639.00	638.52	637.99	637.40

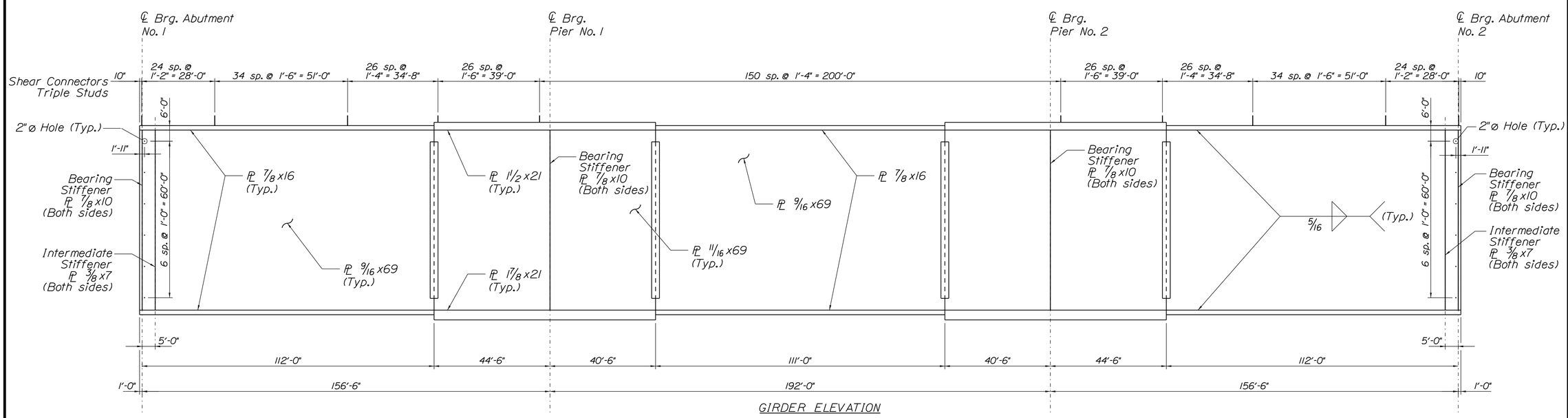

GIRDER ELEVATION
1,113 studs per beam x 5 beams = 5,565 studs

STATE OF MAINE
DEPARTMENT OF TRANSPORTATION

BH-1510(500)X

WIN 15105.00

BRIDGE NO. 3248

BRIDGE PLANS

STATE OF MAINE EVAN C. LOWELL NO. 9065 PROFESSIONAL ENGINEER

SIGNATURE		
9065		
P.E. NUMBER		
6/17/2013		
DATE		

	BY	DATE
PROJ. MANAGER	S. BODGE	
DESIGN-DETAILED	C. GAMACHE	D. HODGES 12/12
CHECKED-REVIEWED	E. LOWELL	T. STUDPIS 12/12
DESIGN2-DETAILED2	B. BOYACI	J. NEARY 12/12
DESIGN3-DETAILED3		
REVISIONS 1		
REVISIONS 2		
REVISIONS 3		
REVISIONS 4		
FIELD CHANGES		

MARTIN MEMORIAL BRIDGE
ANDROSCOGGIN RIVER
RUMFORD OXFORD COUNTY

STRUCTURAL STEEL DETAILS - 1

SHEET NUMBER
76
OF 95

TranSystems

Filename: ...\0030\Road\076_Framing Plan.dgn Division: BRIDGE Username: T SANDELL Date:6/17/2013

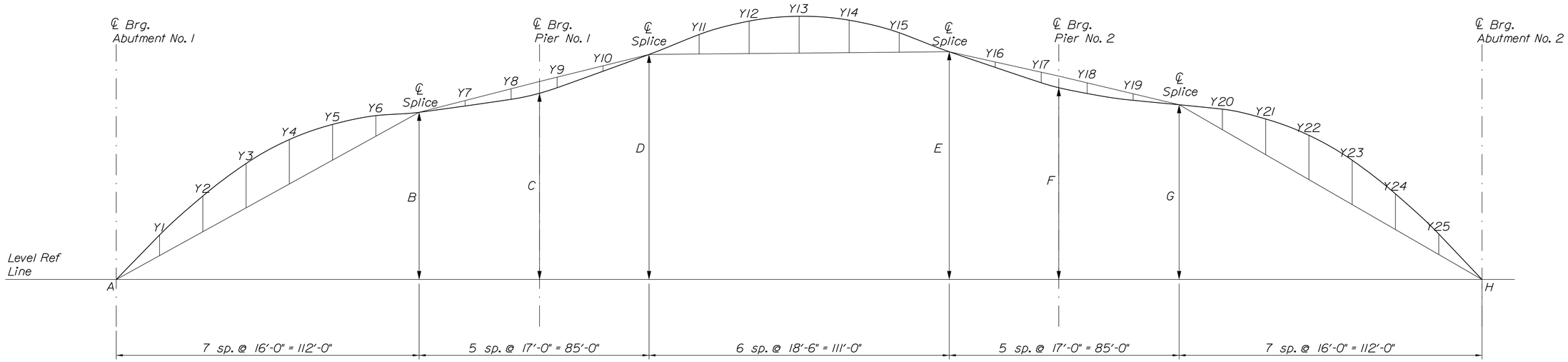

CAMBER DIAGRAM

CAMBER DIMENSIONS (inches)

Girder	A	Y1	Y2	Y3	Y4	Y5	Y6	B	Y7	Y8	C	Y9	Y10	D	Y11	Y12	Y13	Y14	Y15	E	Y16	Y17	F	Y18	Y19	G	Y20	Y21	Y22	Y23	Y24	Y25	H
G1	0.67	0.21	0.36	0.44	0.44	0.36	0.21	3.22	-0.05	-0.05	3.65	-0.04	-0.01	4.12	0.18	0.30	0.35	0.30	0.18	4.10	0.00	0.00	3.61	0.00	0.01	3.09	0.21	0.36	0.44	0.44	0.36	0.21	0.00
G2	0.32	0.22	0.38	0.46	0.46	0.38	0.22	3.08	-0.04	-0.05	3.52	-0.04	-0.02	4.02	0.19	0.32	0.36	0.32	0.19	4.03	0.00	-0.02	3.55	-0.01	0.00	3.06	0.22	0.38	0.46	0.46	0.38	0.22	0.00
G3	0.00	0.22	0.38	0.46	0.46	0.38	0.22	3.14	0.00	-0.01	3.66	-0.02	0.00	4.17	0.19	0.32	0.36	0.32	0.19	4.22	0.00	-0.02	3.76	-0.01	0.00	3.28	0.22	0.38	0.46	0.46	0.38	0.22	0.26
G4	0.00	0.25	0.44	0.53	0.51	0.41	0.23	3.29	0.00	-0.01	3.83	-0.02	0.00	4.35	0.19	0.32	0.36	0.32	0.19	4.45	0.00	-0.02	4.00	-0.01	0.00	3.54	0.22	0.38	0.46	0.46	0.38	0.22	0.55
G5	0.00	0.27	0.48	0.58	0.54	0.43	0.24	3.44	0.01	0.00	4.01	0.00	0.00	4.54	0.18	0.30	0.35	0.30	0.18	4.68	0.00	0.00	4.25	0.00	0.01	3.79	0.21	0.36	0.44	0.44	0.36	0.21	0.87

TABLE OF DEFLECTIONS (inches)

	℄ Brg., Abut. No. 1	-16.0'	-32.0'	-48.0'	-64.0'	-80.0'	-96.0'	Splice	-17.0'	-34.0'	℄ Brg., Pier No. 1	-51.0'	-68.0'	Splice	-18.5'	-37.0'	-55.5'	-74.0'	-92.5'	Splice	-17.0'	-34.0'	℄ Brg., Pier No. 2	-51.0'	-68.0'	Splice	-16.0'	-32.0'	-48.0'	-64.0'	-80.0'	-96.0'	℄ Brg., Abut. No. 2
Steel Dead Load	0.0"	0.3"	0.6"	0.8"	0.9"	0.8"	0.7"	0.5"	0.2"	0.1"	0.0"	0.0"	0.1"	0.2"	0.4"	0.5"	0.6"	0.5"	0.4"	0.2"	0.1"	0.0"	0.0"	0.1"	0.2"	0.5"	0.7"	0.8"	0.9"	0.8"	0.6"	0.3"	0.0"
Fluid Dead Load (Interior)	0.0"	1.1"	2.0"	2.6"	2.8"	2.6"	2.1"	1.4"	0.7"	0.2"	0.0"	0.0"	0.2"	0.6"	1.2"	1.6"	1.8"	1.6"	1.2"	0.6"	0.2"	0.0"	0.0"	0.2"	0.7"	1.4"	2.1"	2.6"	2.8"	2.6"	2.0"	1.1"	0.0"
Fluid Dead Load (Exterior)	0.0"	1.0"	1.7"	2.2"	2.4"	2.3"	1.8"	1.2"	0.6"	0.2"	0.0"	0.0"	0.2"	0.5"	1.0"	1.4"	1.5"	1.4"	1.0"	0.5"	0.2"	0.0"	0.0"	0.2"	0.6"	1.2"	1.8"	2.3"	2.4"	2.2"	1.7"	1.0"	0.0"
Superimposed Dead Load	0.0"	0.3"	0.5"	0.7"	0.8"	0.7"	0.6"	0.4"	0.2"	0.0"	0.0"	0.0"	0.1"	0.2"	0.4"	0.5"	0.6"	0.5"	0.4"	0.2"	0.1"	0.0"	0.0"	0.0"	0.2"	0.4"	0.6"	0.7"	0.8"	0.7"	0.5"	0.3"	0.0"

STRUCTURAL STEEL NOTES

1. Camber ordinates, as shown, are computed to compensate for all dead load deflections and for the curvature of the finished grade profile.

2. No transverse butt weld splices will be allowed in the flange plates or web plates within 10 feet or 10 percent of the span length (whichever is greater) from the points of maximum negative moment or maximum positive moment. Butt weld splices in flanges shall be not less than one foot from transverse butt welds in the web plates and no transverse web or flange butt welds shall be located within one foot of other trasverse welds (e.g. connection plates to web welds) on either flange or web. No transverse butt weld splices will be allowed in areas of stress reversal.

3. Sections of flange plates or web plates between transverse shop splices or between a transverse shop splice and a field splice shall be not less than 20 feet in length unless otherwise shown on plans.

4. Bearing stiffeners shall be plumb after erection and dead loading of the structure. Intermediate web stiffeners may be either plumb or normal to the top flange.

5. Connection plates for all Type "M" crossframes shall have a thickness of 3/8 inch.

6. Crossframe or diaphragm connection plates may be either plumb or normal to the top flange.

7. All connection plates and bearing stiffeners shall be welded to the top and bottom flanges using a 5/16 inch weld. Intermediate stiffeners shall be tight fit to both flanges.

8. Bolted field splice connections shall be made using 7/8 inch ASTM A 325 H.S. bolts. Hole size shall be 15/16 inch diameter. Bolt threads shall be excluded from the shear plane of the fieled splice connections.

9. Girder ends and end diaphragms shall be coated to a distance of 10 feet from the centerline of bearing at the abutments in accordance with Special Provisions Section 506, Protective Coating - Steel (Zinc Rich Coating System).

TranSystems

STATE OF MAINE
DEPARTMENT OF TRANSPORTATION

BH-1510(500)X

WIN 15105.00

BRIDGE NO. 3248

BRIDGE PLANS

STATE OF MAINE EVAN C. LOWELL NO. 9065 PROFESSIONAL ENGINEER

PROJ. MANAGER	S. BOOGE	BY	DATE
DESIGN-DETAILED	C. GAMACHE	T. SANDELL	12/12
CHECKED-REVIEWED	E. LOWELL	T. STUOPIS	12/12
DESIGN2-DETAILED2			
DESIGN3-DETAILED3			
REVISIONS 1			
REVISIONS 2			
REVISIONS 3			
REVISIONS 4			
FIELD CHANGES			

SIGNATURE
9065
P.E. NUMBER
6/17/2013
DATE

MARTIN MEMORIAL BRIDGE
ANDROSCOGGIN RIVER
RUMFORD OXFORD COUNTY

STRUCTURAL STEEL DETAILS - 2

SHEET NUMBER
77
OF 95

Filename: ...\Road\077_StructuralDetails.dgn Division: BRIDGE Username: T SANDELL Date:6/17/2013

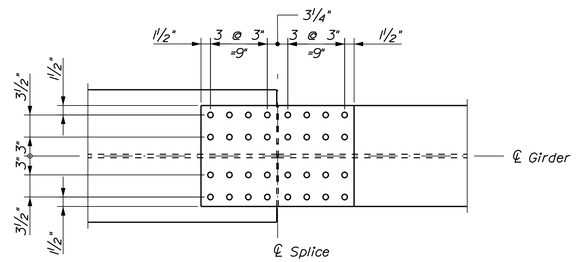

TOP & BOTTOM FLANGE SPLICES

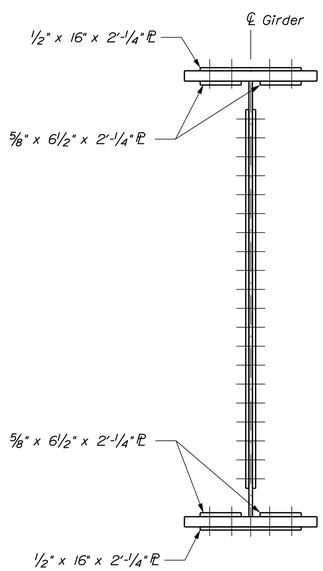

SECTION A-A

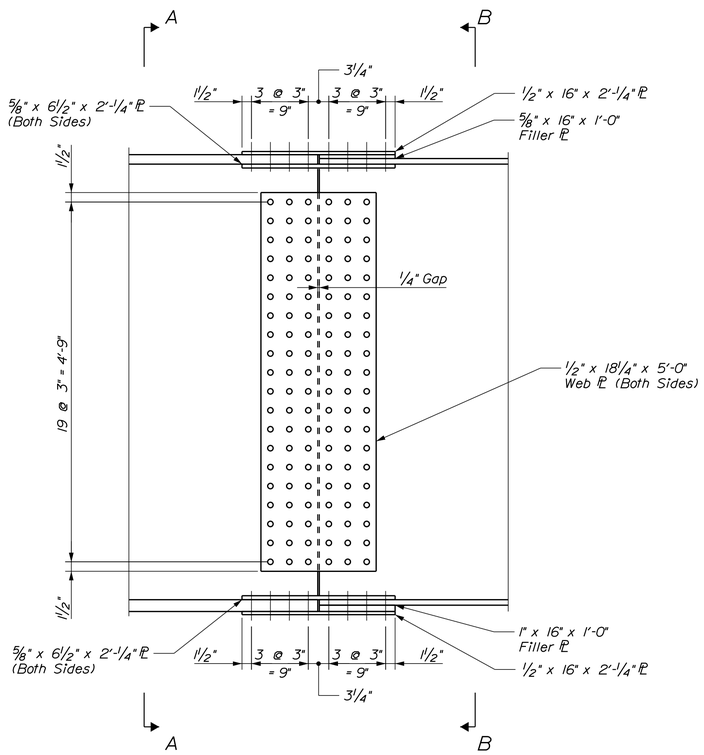

WEB SPLICE

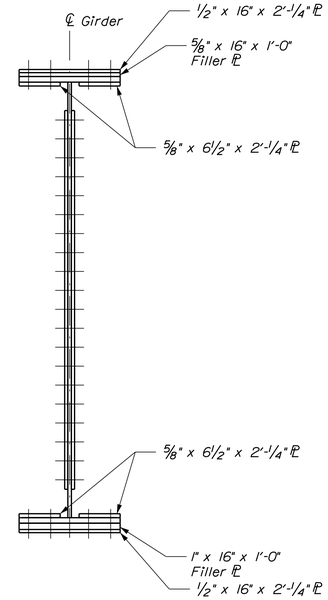

SECTION B-B

TranSystems

STATE OF MAINE
DEPARTMENT OF TRANSPORTATION

BH-1510(500)X

WIN 15105.00

BRIDGE NO. 3248

BRIDGE PLANS

STATE OF MAINE
EVAN C. LOWELL
NO. 9065
PROFESSIONAL ENGINEER
6-17-13

		BY	DATE
PROJ. MANAGER	S. BODGE		
DESIGN-DETAILED	C.GAMACHE	C.GAMACHE	12/12
CHECKED-REVIEWED	E.LOWELL	M.D'ANGELO	12/7/12
DESIGN2-DETAILED2			
DESIGN3-DETAILED3			
REVISIONS 1			
REVISIONS 2			
REVISIONS 3			
REVISIONS 4			
FIELD CHANGES			

SIGNATURE

9065
P.E. NUMBER

6/17/2013
DATE

MARTIN MEMORIAL BRIDGE
ANDROSCOGGIN RIVER
RUMFORD OXFORD COUNTY

STRUCTURAL STEEL DETAILS - 3

SHEET NUMBER
78
OF 95

Filename: ...\078_StructuralSteelDetails - 3.dgn Division: BRIDGE Username: T SANDELL Date:6/17/2013

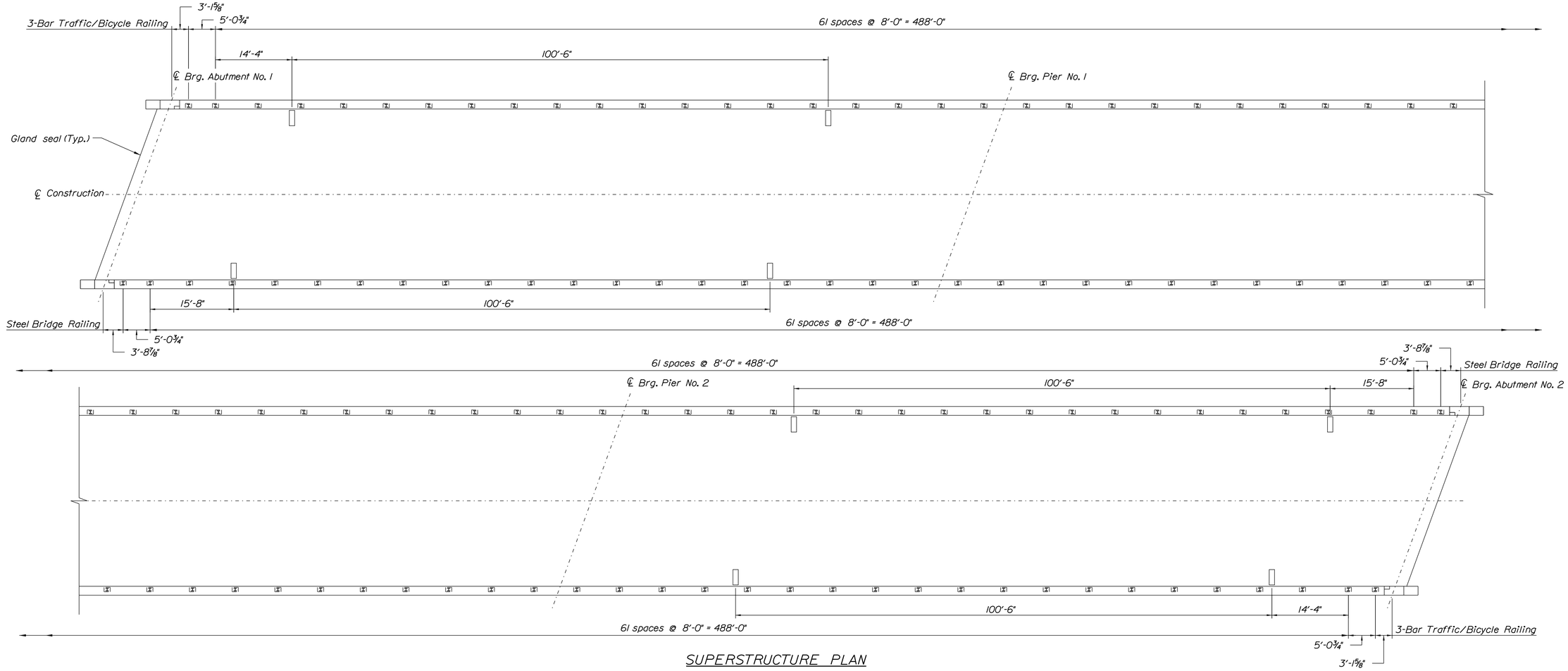

SUPERSTRUCTURE PLAN

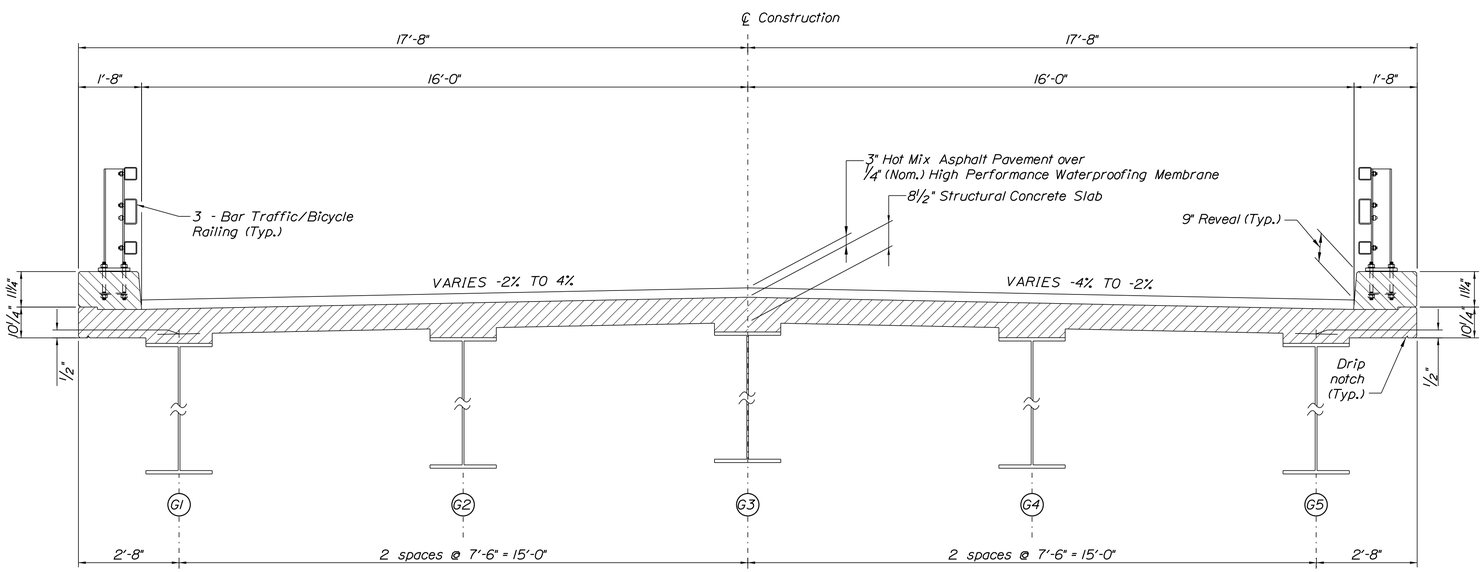

TRANSVERSE SECTION

SUPERSTRUCTURE NOTES

1. The theoretical blocking used for design of the structure is 3 inches (2 inches clear) at the centerline of bearing of the abutments. Refer to Standard Detail 502(02) for blocking details.

2. Reinforcing steel shall have a minimum concrete cover of 2 inches unless otherwise noted.

3. Adjust reinforcing steel to fit around the bridge drains in a manner approved by the Resident. Do not cut transverse reinforcing bars.

4. Form a one inch V-groove on the fascias at the horizontal joint between the curb and slab.

5. Unless the superstructure slab concrete is placed in one continuous operation, the initial placement shall start at a simply supported end of the deck slab and shall terminate at the completion of a positive moment section. Successive placements shall proceed from the end of the previous placement, terminate at the completion of a positive moment section, and include two or more spans. Concrete in a placement shall be kept plastic one complete span behind the span being placed. A minimum of 5 days shall elapse between successive partial placements. The superstructure slab concrete placement sequence shall be approved by the Resident.

6. At the Contractor's option, Precast Deck Panels may be used in place of the full depth cast-in-place deck slab, in accordance with the Special Provisions Section 502. Structural Concrete - Precast Desk panels, and in accordance with the Standard Details.

7. Payment for all reinforcing steel fabricated, delivered, and placed in the structural concrete slab and curbs will be considered incidental to the appropriate Standard Specifications Section 502 pay item.

8. Provide 3 additional stirrups in the curbs at each Transition Barrier location.

9. The Contractor shall install Transintion Barrier vertical closed stirrups, as shown in the Standard Detail Section 526 and in the Modified Transition Barrier Details, prior to the placement of the curb concrete.

TranSystems

STATE OF MAINE
DEPARTMENT OF TRANSPORTATION

BH-1510(500)X

WIN 15105.00

BRIDGE NO. 3248

BRIDGE PLANS

STATE OF MAINE
EVAN C. LOWELL
NO. 9065
PROFESSIONAL ENGINEER
6-17-13

		SIGNATURE	
		9065	
		P.E. NUMBER	
		6/17/2013	
		DATE	
PROJ. MANAGER	S. BODGE	BY	DATE
DESIGN-DETAILED	C. GAMACHE	D. HODGES	8/12
CHECKED-REVIEWED	E. LOWELL	T. STUDRIS	8/12
DESIGN2-DETAILED2			
DESIGN3-DETAILED3			
REVISIONS 1			
REVISIONS 2			
REVISIONS 3			
REVISIONS 4			
FIELD CHANGES			

MARTIN MEMORIAL BRIDGE
ANDROSCOGGIN RIVER
RUMFORD OXFORD COUNTY

SUPERSTRUCTURE

SHEET NUMBER
79
OF 95

Filename: ...\Road\079_Superstructure.dgn Division: BRIDGE Username: T SANDELL Date:6/17/2013

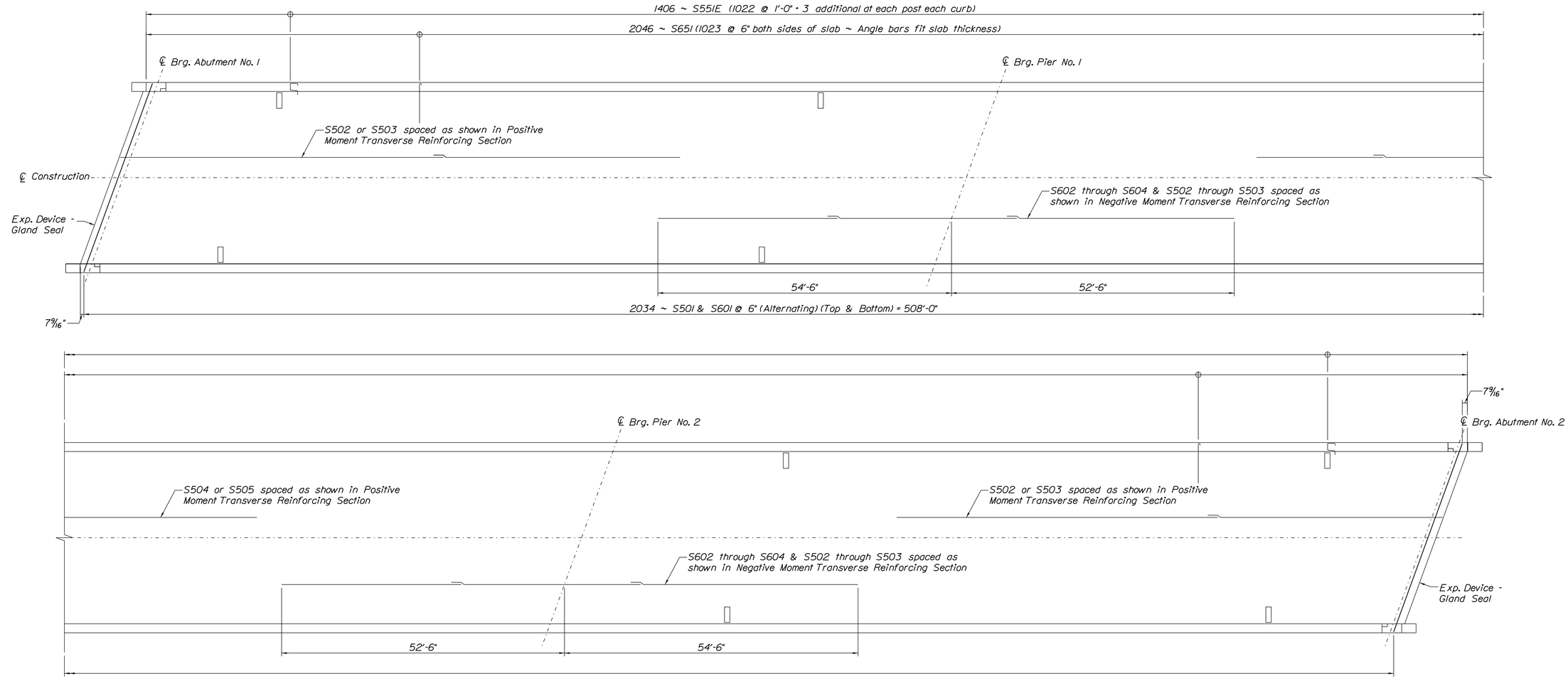

SUPERSTRUCTURE REINFORCING PLAN

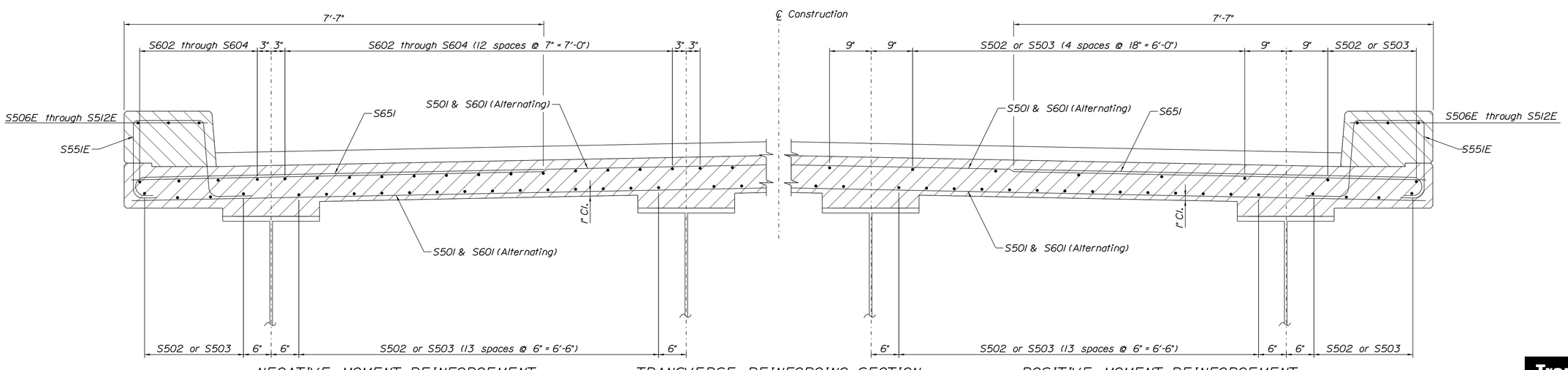

NEGATIVE MOMENT REINFORCEMENT

TRANSVERSE REINFORCING SECTION

POSITIVE MOMENT REINFORCEMENT

TranSystems

STATE OF MAINE
DEPARTMENT OF TRANSPORTATION

BH-1510(500)X

WIN 15105.00

BRIDGE NO. 3248

BRIDGE PLANS

STATE OF MAINE
EVAN C. LOWELL
NO. 9065
PROFESSIONAL ENGINEER
6-17-13

SIGNATURE		
9065		
P.E. NUMBER		
6/17/2013		
DATE		

PROJ. MANAGER	S. BODGE	BY	DATE
DESIGN-DETAILED	C. GAMACHE	D. HODGES	8/12
CHECKED-REVIEWED	E. LOWELL	T. STUDPIS	8/12
DESIGN2-DETAILED2			
DESIGN3-DETAILED3			
REVISIONS 1			
REVISIONS 2			
REVISIONS 3			
REVISIONS 4			
FIELD CHANGES			

MARTIN MEMORIAL BRIDGE
ANDROSCOGGIN RIVER
RUMFORD OXFORD COUNTY

SUPERSTRUCTURE REINFORCING

SHEET NUMBER

80

OF 95

Filename: ...\080_Superstructure Reinf.dgn Division: BRIDGE Username: T SANDELL Date:6/17/2013

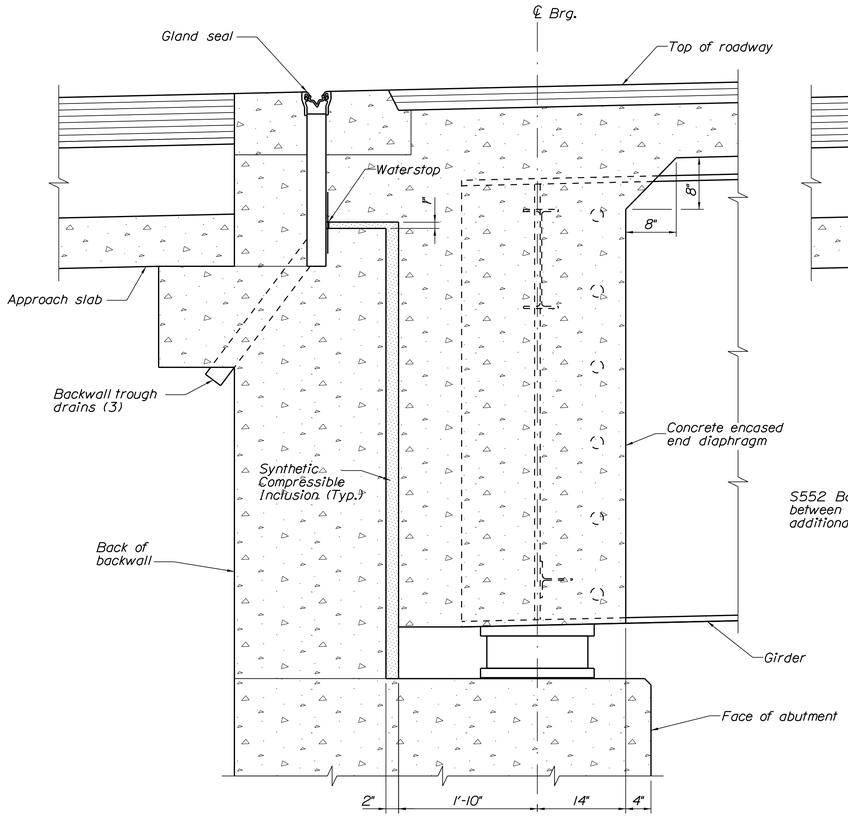

TYPICAL ROADWAY SECTION AT ABUTMENT

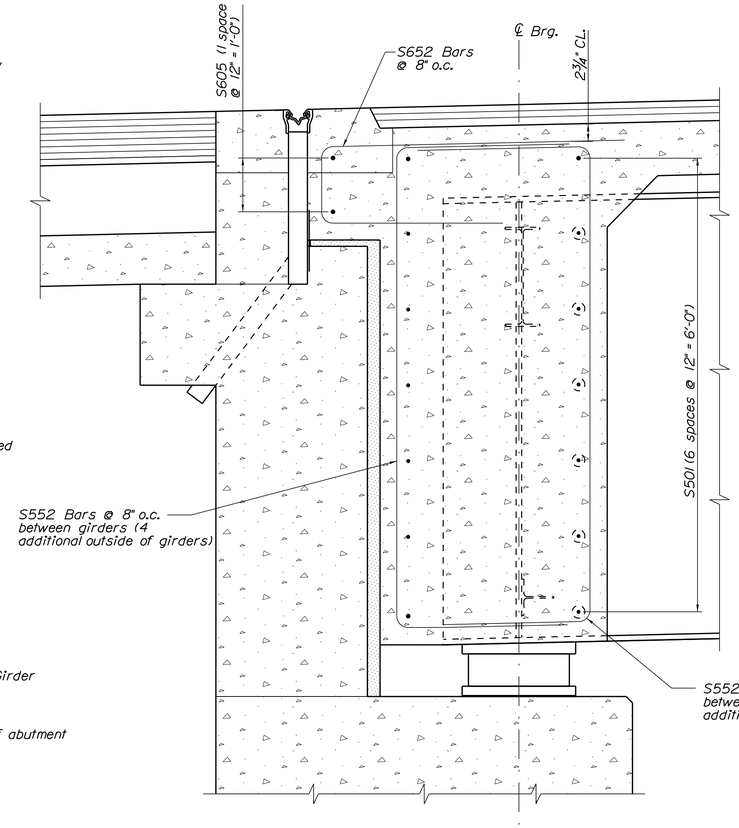

ROADWAY SECTION AT ABUTMENT REINFORCING

Roadway Section Notes

1. Expansion device, gland seal, to be cleaned and galvanized in accordance with Section 506 of the Contract Special Provisions.
2. The seals to be furnished shall have a minimum movement rating of:
   Abutment No. 1 = 3.25"
   Abutment No. 2 = 3.25"
3. The Resident shall approve the seals prior to fabrication of the expansion joint device.
4. Place 4 inch diameter backwall trough drains at each low point (3 drains per location).
5. Concrete end diaphragm to be poured monolithically with the concrete deck.

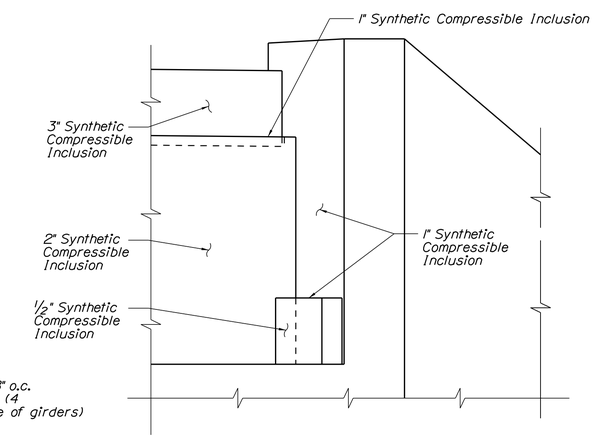

ABUTMENT SYNTHETIC COMPRESSIBLE INCLUSION DETAIL

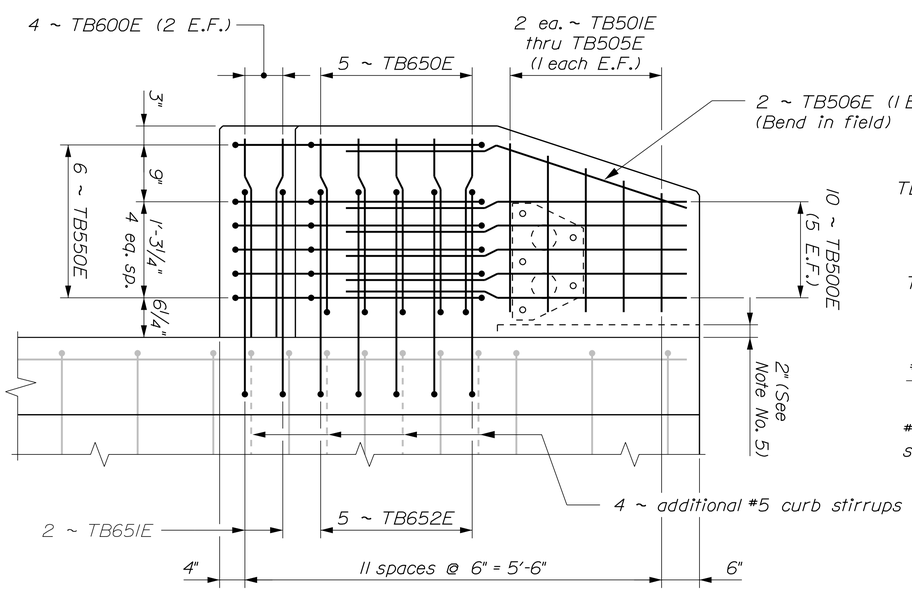

TRANSITION BARRIER ELEVATION

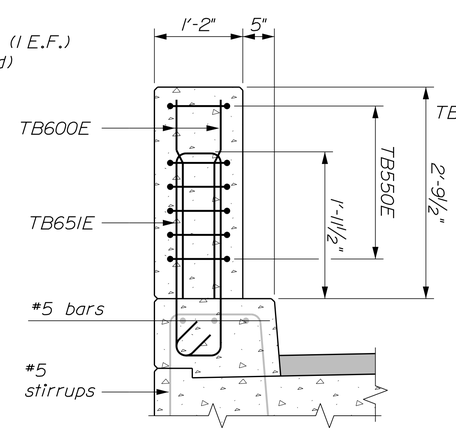

SECTION THRU RECESS

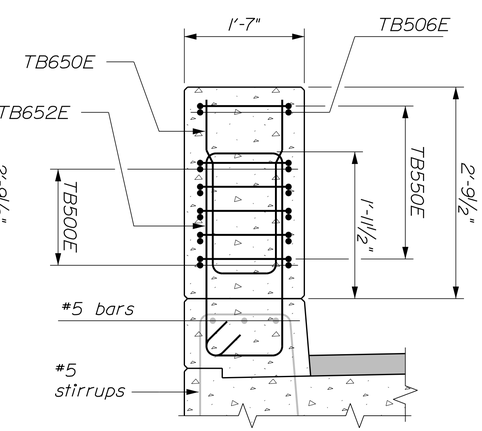

SECTION THRU STEM

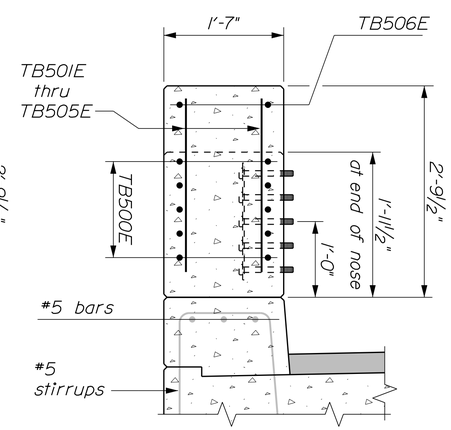

SECTION THRU NOSE

STATE OF MAINE
DEPARTMENT OF TRANSPORTATION

BH-1510(500)X

WIN 15105.00

BRIDGE NO. 3248

BRIDGE PLANS

STATE OF MAINE EVAN C. LOWELL NO. 9065 PROFESSIONAL ENGINEER 6-17-13

SIGNATURE			
9065			
P.E. NUMBER			
6/17/2013			
DATE			

PROJ. MANAGER	S. BODGE	BY	DATE
DESIGN-DETAILED	C. GAMACHE	D. HODGES	12/12
CHECKED-REVIEWED	E. LOWELL	M.D'ANGELO	12/12
DESIGN2-DETAILED2			
DESIGN3-DETAILED3			
REVISIONS 1			
REVISIONS 2			
REVISIONS 3			
REVISIONS 4			
FIELD CHANGES			

MARTIN MEMORIAL BRIDGE
ANDROSCOGGIN RIVER
RUMFORD OXFORD COUNTY

MISCELLANEOUS SUPERSTRUCTURE DETAILS

TranSystems

SHEET NUMBER
81
OF 95

Filename: ...\081_Misc_Super_Details.dgn Division: BRIDGE Username: T SANDELL Date:6/17/2013

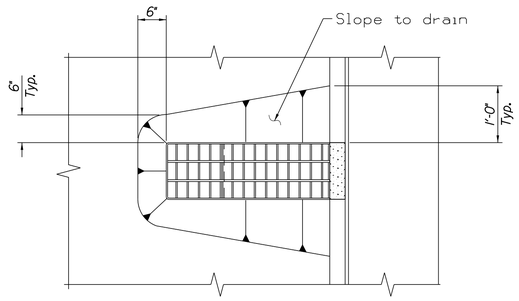

BRIDGE DRAIN PLAN

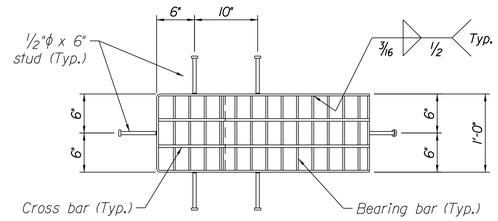

~ DRAIN TOP VIEW ~

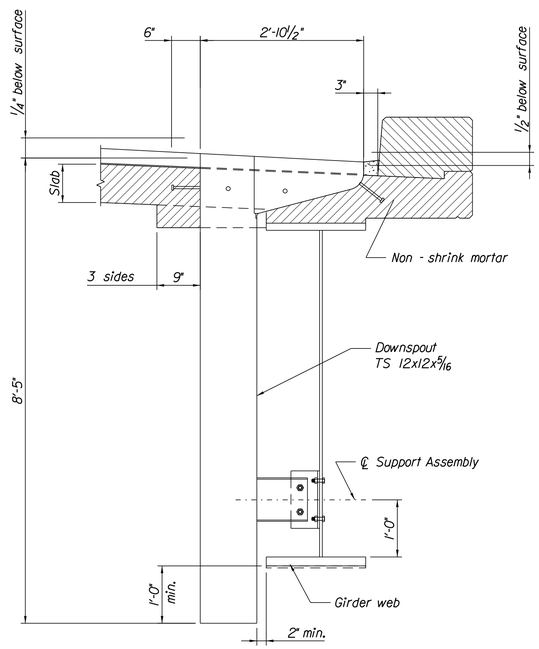

BRIDGE DRAIN ELEVATION

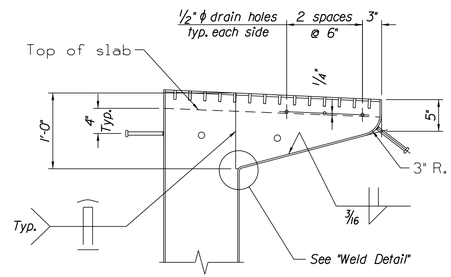

~ DRAIN SECTION ~

BRIDGE DRAIN

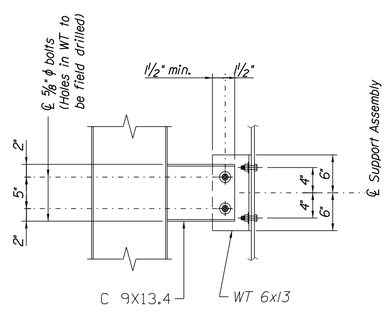

~ SUPPORT ASSEMBLY DETAIL ~

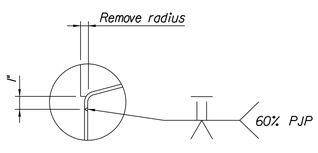

WELD DETAIL

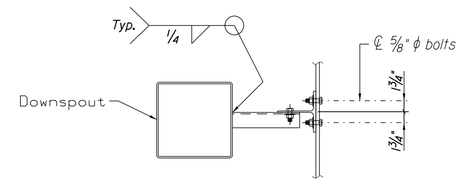

~ SUPPORT ASSEMBLY TOP VIEW ~

SUPPORT ASSEMBLY

BRIDGE DRAIN NOTES

1. All plates shall be 1/4 inch thick.

2. The grating shall be commercial heavy - duty grating with 1 1/2" x 5/16" bearing bars spaced at 2 3/8 inches and 3/8" ϕ cross bars spaced at 4 inches. The grating shall be centered in the drain top.

3. Drains, including the support assembly, shall be cleaned and galvanized in accordance with Section 506 of the Contract Special Provisions.

4. Shear connectors welded to the top flange of steel beams may require adjustment to clear the bridge drains.

5. Payment for bridge drains will be as specified under Subsection 502.19 of the Standard Specifications.

BRIDGE DRAIN MATERIALS

Downspouts _ _ _ _ _ _ _ _ _ _ _ _ _ _ _ _ _ _ ASTM A 500, Grade B.
Shapes & plates _ _ _ _ _ _ _ _ _ _ AASHTO M 270M/M 270, Grade 50
Bolts and nuts _ _ _ _ _ _ _ _ _ _ _ _ _ _ _ _ AASHTO A 307, Grade C

STATE OF MAINE
DEPARTMENT OF TRANSPORTATION

BH-1510(500)X

WIN 15105.00

BRIDGE NO. 3248

BRIDGE PLANS

STATE OF MAINE
EVAN C. LOWELL
NO. 9065
PROFESSIONAL ENGINEER
6-17-13

PROJ. MANAGER	S. BODGE	BY	DATE
DESIGN-DETAILED	C. GAMACHE	D. HODGES	8/12
CHECKED-REVIEWED	E. LOWELL	T. STUDPIS	8/12
DESIGN2-DETAILED2			
DESIGN3-DETAILED3			
REVISIONS 1			
REVISIONS 2			
REVISIONS 3			
REVISIONS 4			
FIELD CHANGES			

SIGNATURE
9065
P.E. NUMBER
6/17/2013
DATE

MARTIN MEMORIAL BRIDGE
ANDROSCOGGIN RIVER
RUMFORD OXFORD COUNTY

BRIDGE DRAINS

SHEET NUMBER
82
OF 95

TranSystems

Filename: ...\Road\082_BRIDGE DRAINS.dgn Division: BRIDGE Username: T SANDELL Date:6/17/2013

TYPE - BENDING DIAGRAMS

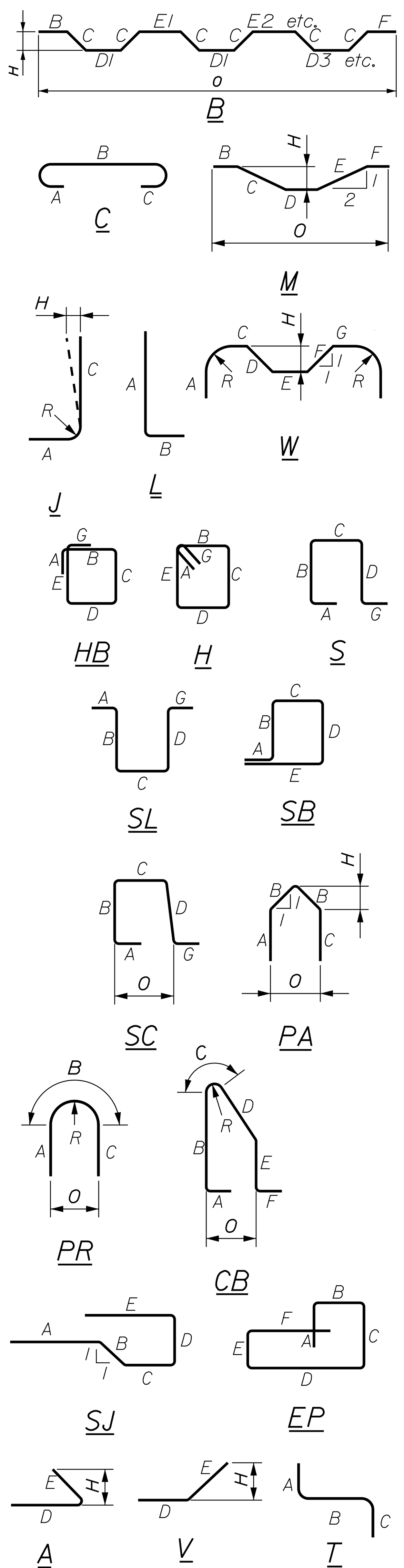

All dimensions are out-to-out of bar.

Bending details and hooks shall conform to the recommendations of the current revision of ACI Standard 318.

Reinforcing Bar: ASTM A615/A615M, Grade 420

GENERAL NOTES

1. The first two digits following the letter(s) of the mark indicate the size ofthe bar:

   Mark "A1602" = bar size #16
   Mark "P2501" = bar size #25
   Mark "S1950" = bar size #19

2. Each crank bar, Type B, may be replaced by two (2) straight bars (one top and one bottom) of the same bar size as the crank bar. Payment in either case shall be based on crank bars as schedule on the plans.

STRAIGHT BARS

MARK	QTY.	LENGTH	LOCATION	MARK	QTY.	LENGTH	LOCATION
Pier No. 1							
P0501	14	18'-9"	Horizontal - Pier Cap				
P0502	14	23'-2"	Horizontal - Pier Cap				
P0801	90	26'-4"	Vertical - Pier Stem Faces				
P0701	64	17'-2"	Horizontal - Pier Stem Faces				
P0702	64	13'-6"	Horizontal - Pier Stem Faces				
P0601	49	13'-6"	Transverse - Pile Cap Top				
P0602	22	47'-6"	Longitudinal - Pile Cap				
P0901	49	13'-6"	Transverse - Pile Cap Bottom				
Approach Slabs							
AS0501	32	32'-3"	Transverse				
AS0601	124	15'-0"	Longitudinal				
MARK	QTY.	LENGTH	LOCATION	MARK	QTY.	LENGTH	LOCATION

BENT BARS

MARK	QTY.	LENGTH	TYPE	A	B	C	D	E	F	G	H	O	R	LOCATION
Pier No. 1														
P0551	41	10'-8"	SL	--	3'-0"	4'-8"	3'-0"	--	--	--	--	--	--	Vertical U-Bar - Top Pier Cap
P0552	41	10'-6"	SL	--	3'-0"	4'-6"	3'-0"	--	--	--	--	--	--	Vertical U-Bar - Bottom Pier Cap
P0951	90	11'-11"	V	--	--	--	1'-8"	10'-3"	--	--	10'-2"	--	--	Vertical - Stem into Pile Cap
P0751	1	9'-0"	SL	--	2'-9"	3'-6"	2'-9"	--	--	--	--	--	--	Horizontal U-Bar - Back of Stem
P0752	1	9'-4"	SL	--	2'-11"	3'-6"	2'-11"	--	--	--	--	--	--	Horizontal U-Bar - Back of Stem
P0753	1	9'-7"	SL	--	3'-0"	3'-7"	3'-0"	--	--	--	--	--	--	Horizontal U-Bar - Back of Stem
P0754	1	10'-0"	SL	--	3'-2"	3'-8"	3'-2"	--	--	--	--	--	--	Horizontal U-Bar - Back of Stem
P0755	1	10'-3"	SL	--	3'-3"	3'-9"	3'-3"	--	--	--	--	--	--	Horizontal U-Bar - Back of Stem
P0756	1	10'-8"	SL	--	3'-5"	3'-10"	3'-5"	--	--	--	--	--	--	Horizontal U-Bar - Back of Stem
P0757	1	10'-11"	SL	--	3'-6"	3'-11"	3'-6"	--	--	--	--	--	--	Horizontal U-Bar - Back of Stem
P0758	1	11'-2"	SL	--	3'-7"	4'-0"	3'-7"	--	--	--	--	--	--	Horizontal U-Bar - Back of Stem
P0759	1	11'-7"	SL	--	3'-9"	4'-1"	3'-9"	--	--	--	--	--	--	Horizontal U-Bar - Back of Stem
P0760	1	11'-10"	SL	--	3'-10"	4'-2"	3'-10"	--	--	--	--	--	--	Horizontal U-Bar - Back of Stem
P0761	1	12'-3"	SL	--	4'-0"	4'-3"	4'-0"	--	--	--	--	--	--	Horizontal U-Bar - Back of Stem
P0762	1	12'-6"	SL	--	4'-1"	4'-4"	4'-1"	--	--	--	--	--	--	Horizontal U-Bar - Back of Stem
P0763	1	12'-11"	SL	--	4'-3"	4'-5"	4'-3"	--	--	--	--	--	--	Horizontal U-Bar - Back of Stem
P0764	1	13'-2"	SL	--	4'-4"	4'-6"	4'-4"	--	--	--	--	--	--	Horizontal U-Bar - Back of Stem
P0765	1	13'-5"	SL	--	4'-5"	4'-7"	4'-5"	--	--	--	--	--	--	Horizontal U-Bar - Back of Stem
P0766	1	13'-10"	SL	--	4'-7"	4'-8"	4'-7"	--	--	--	--	--	--	Horizontal U-Bar - Back of Stem
P0767	1	14'-1"	SL	--	4'-8"	4'-9"	4'-8"	--	--	--	--	--	--	Horizontal U-Bar - Back of Stem
P0768	1	14'-6"	SL	--	4'-10"	4'-10"	4'-10"	--	--	--	--	--	--	Horizontal U-Bar - Back of Stem
P0769	1	14'-9"	SL	--	4'-11"	4'-11"	4'-11"	--	--	--	--	--	--	Horizontal U-Bar - Back of Stem
P0770	1	15'-2"	SL	--	5'-1'	5'-0"	5'-1'	--	--	--	--	--	--	Horizontal U-Bar - Back of Stem
P0771	1	15'-4"	SL	--	5'-2"	5'-0"	5'-2"	--	--	--	--	--	--	Horizontal U-Bar - Back of Stem
P0772	1	15'-7"	SL	--	5'-3"	5'-1"	5'-3"	--	--	--	--	--	--	Horizontal U-Bar - Back of Stem
P0773	1	16'-0"	SL	--	5'-5"	5'-2"	5'-5"	--	--	--	--	--	--	Horizontal U-Bar - Back of Stem
P0774	1	16'-3"	SL	--	5'-6"	5'-3"	5'-6"	--	--	--	--	--	--	Horizontal U-Bar - Back of Stem
P0775	1	16'-8"	SL	--	5'-8"	5'-4"	5'-8"	--	--	--	--	--	--	Horizontal U-Bar - Back of Stem
P0776	1	16'-11"	SL	--	5'-9"	5'-5"	5'-9"	--	--	--	--	--	--	Horizontal U-Bar - Back of Stem
P0777	1	17'-4"	SL	--	5'-11"	5'-6"	5'-11"	--	--	--	--	--	--	Horizontal U-Bar - Back of Stem
P0778	1	17'-7"	SL	--	6'-0"	5'-7"	6'-0"	--	--	--	--	--	--	Horizontal U-Bar - Back of Stem
P0779	1	17'-10"	SL	--	6'-1"	5'-8"	6'-1"	--	--	--	--	--	--	Horizontal U-Bar - Back of Stem
P0780	1	18'-3"	SL	--	6'-3"	5'-9"	6'-3"	--	--	--	--	--	--	Horizontal U-Bar - Back of Stem
P0781	1	18'-6"	SL	--	6'-4"	5'-10"	6'-4"	--	--	--	--	--	--	Horizontal U-Bar - Back of Stem
P0782	1	18'-11"	SL	--	6'-6"	5'-11"	6'-6"	--	--	--	--	--	--	Horizontal U-Bar - Back of Stem
P07101	1	10'-4"	PA	2'-9"	2'-5"	2'-9"	--	--	--	--	1'-9"	3'-6"	--	Horizontal Pier Nose Stem
P07102	1	11'-0"	PA	3'-0"	2'-6"	3'-0"	--	--	--	--	1'-9"	3'-6"	--	Horizontal Pier Nose Stem
P07103	1	11'-6"	PA	3'-2"	2'-7"	3'-2"	--	--	--	--	1'-9"	3'-6"	--	Horizontal Pier Nose Stem
P07104	1	12'-0"	PA	3'-5"	2'-7"	3'-5"	--	--	--	--	1'-10"	3'-8"	--	Horizontal Pier Nose Stem
P07105	1	12'-6"	PA	3'-7"	2'-8"	3'-7"	--	--	--	--	1'-10"	3'-8"	--	Horizontal Pier Nose Stem
P07106	1	13'-0"	PA	3'-9"	2'-9"	3'-9"	--	--	--	--	1'-11"	3'-10"	--	Horizontal Pier Nose Stem
P07107	1	13'-6"	PA	4'-0"	2'-9"	4'-0"	--	--	--	--	1'-11"	3'-10"	--	Horizontal Pier Nose Stem
P07108	1	14'-0"	PA	4'-2"	2'-10"	4'-2"	--	--	--	--	2'-0"	4'-0"	--	Horizontal Pier Nose Stem
P07109	1	14'-6"	PA	4'-4"	2'-11"	4'-4"	--	--	--	--	2'-0"	4'-0"	--	Horizontal Pier Nose Stem
P07110	1	15'-0"	PA	4'-7"	2'-11"	4'-7"	--	--	--	--	2'-1"	4'-2"	--	Horizontal Pier Nose Stem
P07111	1	15'-6"	PA	4'-9"	3'-0"	4'-9"	--	--	--	--	2'-1"	4'-2"	--	Horizontal Pier Nose Stem
P07112	1	16'-2"	PA	5'-0"	3'-1"	5'-0"	--	--	--	--	2'-2"	4'-4"	--	Horizontal Pier Nose Stem
P07113	1	16'-6"	PA	5'-2"	3'-1"	5'-2"	--	--	--	--	2'-2"	4'-4"	--	Horizontal Pier Nose Stem
P07114	1	17'-0"	PA	5'-4"	3'-2"	5'-4"	--	--	--	--	2'-3"	4'-6"	--	Horizontal Pier Nose Stem
P07115	1	17'-8"	PA	5'-7"	3'-3"	5'-7"	--	--	--	--	2'-3"	4'-6"	--	Horizontal Pier Nose Stem
P07116	1	18'-0"	PA	5'-9"	3'-3"	5'-9"	--	--	--	--	2'-4"	4'-8"	--	Horizontal Pier Nose Stem
P07117	1	18'-6"	PA	5'-11"	3'-4"	5'-11"	--	--	--	--	2'-4"	4'-8"	--	Horizontal Pier Nose Stem
P07118	1	19'-2"	PA	6'-2"	3'-5"	6'-2"	--	--	--	--	2'-5"	4'-10"	--	Horizontal Pier Nose Stem
P07119	1	19'-6"	PA	6'-4"	3'-5"	6'-4"	--	--	--	--	2'-5"	4'-10"	--	Horizontal Pier Nose Stem
P07120	1	20'-2"	PA	6'-7"	3'-6'	6'-7"	--	--	--	--	2'-6"	5'-0"	--	Horizontal Pier Nose Stem
P07121	1	20'-8"	PA	6'-9"	3'-7"	6'-9"	--	--	--	--	2'-6"	5'-0"	--	Horizontal Pier Nose Stem
P07122	1	21'-0"	PA	6'-11"	3'-7"	6'-11"	--	--	--	--	2'-6"	5'-0"	--	Horizontal Pier Nose Stem
P07123	1	21'-8"	PA	7'-2"	3'-8"	7'-2"	--	--	--	--	2'-7"	5'-2"	--	Horizontal Pier Nose Stem
P07124	1	22'-2"	PA	7'-4"	3'-9"	7'-4"	--	--	--	--	2'-7"	5'-2"	--	Horizontal Pier Nose Stem
P07125	1	22'-6"	PA	7'-6"	3'-9"	7'-6"	--	--	--	--	2'-8"	5'-4"	--	Horizontal Pier Nose Stem
P07126	1	23'-2"	PA	7'-9"	3'-10"	7'-9"	--	--	--	--	2'-8"	5'-4"	--	Horizontal Pier Nose Stem
P07127	1	23'-8"	PA	7'-11"	3'-11"	7'-11"	--	--	--	--	2'-9"	5'-6"	--	Horizontal Pier Nose Stem
P07128	1	24'-2"	PA	8'-2"	3'-11"	8'-2"	--	--	--	--	2'-9"	5'-6"	--	Horizontal Pier Nose Stem
P07129	1	24'-8"	PA	8'-4"	4'-0"	8'-4"	--	--	--	--	2'-10"	5'-8"	--	Horizontal Pier Nose Stem
P07130	1	25'-2"	PA	8'-6"	4'-1"	8'-6"	--	--	--	--	2'-10"	5'-8"	--	Horizontal Pier Nose Stem
P07131	1	25'-8"	PA	8'-9"	4'-1"	8'-9"	--	--	--	--	2'-11"	5'-10"	--	Horizontal Pier Nose Stem
P07132	1	26'-2"	PA	8'-11"	4'-2"	8'-11"	--	--	--	--	2'-11"	5'-10"	--	Horizontal Pier Nose Stem
P0451	10	8-6"	SL	--	2'-4"	3'-10"	2'-4"	--	--	--	--	--	--	Pier Cap Keeper Block
P0452	10	8'-11"	SL	--	2'-4"	4'-3"	2'-4"	--	--	--	--	--	--	Pier Cap Keeper Block
P0650	36	14'-1"	PR	5'-7"	2'-10"	5'-7"	--	--	--	--	--	1'-10"	--	Top of Pipe Pile
MARK	QTY.	LENGTH	TYPE	A	B	C	D	E	F	G	H	O	R	LOCATION

TranSystems

STATE OF MAINE
DEPARTMENT OF TRANSPORTATION

BH-1510(500)X

WIN 15105.00

BRIDGE NO. 3248

BRIDGE PLANS

STATE OF MAINE · EVAN C. LOWELL · NO. 9065 · LICENSED PROFESSIONAL ENGINEER

SIGNATURE
9065
P.E. NUMBER
6/17/2013
DATE

		BY	DATE
PROJ. MANAGER	S. BODGE		
DESIGN-DETAILED	J.MUCHA	D. HODGES	12/12
CHECKED-REVIEWED	E. LOWELL	M.D'ANGELO	12/12
DESIGN2-DETAILED2			
DESIGN3-DETAILED3			
REVISIONS 1			
REVISIONS 2			
REVISIONS 3			
REVISIONS 4			
FIELD CHANGES			

MARTIN MEMORIAL BRIDGE
ANDROSCOGGIN RIVER
RUMFORD OXFORD COUNTY

PIER 1 REINFORCEMENT SCHEDULE

Filename: ...\083_Pier ReinfSchedPier1.dgn Division: BRIDGE Username: T SANDELL Date:6/17/2013

TYPE - BENDING DIAGRAMS

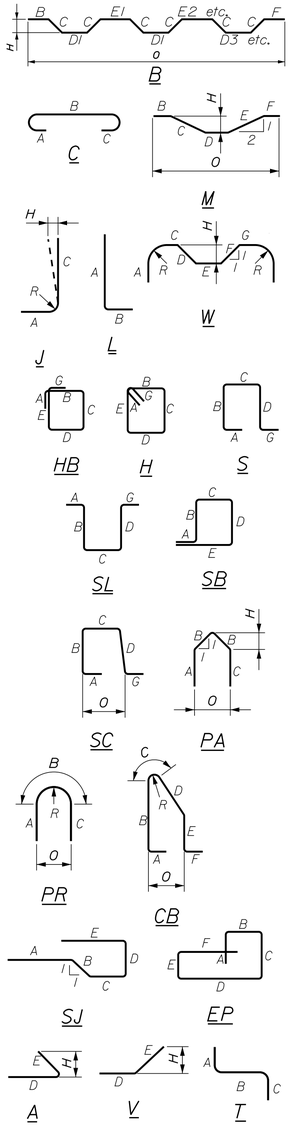

All dimensions are out-to-out of bar.

Bending details and hooks shall conform to the recommendations of the current revision of ACI Standard 318.

Reinforcing Bar: ASTM A615/A615M, Grade 420

GENERAL NOTES

1. The first two digits following the letter(s) of the mark indicate the size of the bar:

   Mark "A1602" = bar size #16
   Mark "P2501" = bar size #25
   Mark "S1950" = bar size #19

2. Each crank bar, Type B, may be replaced by two (2) straight bars (one top and one bottom) of the same bar size as the crank bar. Payment in either case shall be based on crank bars as schedule on the plans.

STRAIGHT BARS

MARK	QTY.	LENGTH	LOCATION	MARK	QTY.	LENGTH	LOCATION
			Pier No. 2				
P0501	14	18'-9"	Horizontal - Pier Cap				
P0502	14	23'-2"	Horizontal - Pier Cap				
P0801	90	26'-4"	Vertical - Pier Stem Faces				
P0701	64	17'-2"	Horizontal - Pier Stem Faces				
P0702	64	13'-6"	Horizontal - Pier Stem Faces				
P0601	49	13'-6"	Transverse - Pile Cap Top				
P0602	22	47'-6"	Longitudinal - Pile Cap				
P0901	49	13'-6"	Transverse - Pile Cap Bottom				
MARK	QTY.	LENGTH	LOCATION	MARK	QTY.	LENGTH	LOCATION

BENT BARS

MARK	QTY.	LENGTH	TYPE	A	B	C	D	E	F	G	H	O	R	LOCATION
								Pier No. 2						
P0551	41	10'-8"	SL	--	3'-0"	4'-8"	3'-0"	--	--	--	--	--	--	Vertical U-Bar - Top Pier Cap
P0552	41	10'-6"	SL	--	3'-0"	4'-6"	3'-0"	--	--	--	--	--	--	Vertical U-Bar - Bottom Pier Cap
P0951	90	15'-1"	V	--	--	--	1'-9"	11'-8"	--	--	1'-8"	--	--	Vertical - Stem into Pile Cap
P0751	1	9'-0"	SL	--	2'-9"	3'-6"	2'-9"	--	--	--	--	--	--	Horizontal U-Bar - Back of Stem
P0752	1	9'-4"	SL	--	2'-11"	3'-6"	2'-11"	--	--	--	--	--	--	Horizontal U-Bar - Back of Stem
P0753	1	9'-7"	SL	--	3'-0"	3'-7"	3'-0"	--	--	--	--	--	--	Horizontal U-Bar - Back of Stem
P0754	1	10'-0"	SL	--	3'-2"	3'-8"	3'-2"	--	--	--	--	--	--	Horizontal U-Bar - Back of Stem
P0755	1	10'-3"	SL	--	3'-3"	3'-9"	3'-3"	--	--	--	--	--	--	Horizontal U-Bar - Back of Stem
P0756	1	10'-8"	SL	--	3'-5"	3'-10"	3'-5"	--	--	--	--	--	--	Horizontal U-Bar - Back of Stem
P0757	1	10'-11"	SL	--	3'-6"	3'-11"	3'-6"	--	--	--	--	--	--	Horizontal U-Bar - Back of Stem
P0758	1	11'-2"	SL	--	3'-7"	4'-0"	3'-7"	--	--	--	--	--	--	Horizontal U-Bar - Back of Stem
P0759	1	11'-7"	SL	--	3'-9"	4'-1"	3'-9"	--	--	--	--	--	--	Horizontal U-Bar - Back of Stem
P0760	1	11'-10"	SL	--	3'-10"	4'-2"	3'-10"	--	--	--	--	--	--	Horizontal U-Bar - Back of Stem
P0761	1	12'-3"	SL	--	4'-0"	4'-3"	4'-0"	--	--	--	--	--	--	Horizontal U-Bar - Back of Stem
P0762	1	12'-6"	SL	--	4'-1"	4'-4"	4'-1"	--	--	--	--	--	--	Horizontal U-Bar - Back of Stem
P0763	1	12'-11"	SL	--	4'-3"	4'-5"	4'-3"	--	--	--	--	--	--	Horizontal U-Bar - Back of Stem
P0764	1	13'-2"	SL	--	4'-4"	4'-6"	4'-4"	--	--	--	--	--	--	Horizontal U-Bar - Back of Stem
P0765	1	13'-5"	SL	--	4'-5"	4'-7"	4'-5"	--	--	--	--	--	--	Horizontal U-Bar - Back of Stem
P0766	1	13'-10"	SL	--	4'-7"	4'-8"	4'-7"	--	--	--	--	--	--	Horizontal U-Bar - Back of Stem
P0767	1	14'-1"	SL	--	4'-8"	4'-9"	4'-8"	--	--	--	--	--	--	Horizontal U-Bar - Back of Stem
P0768	1	14'-6"	SL	--	4'-10"	4'-10"	4'-10"	--	--	--	--	--	--	Horizontal U-Bar - Back of Stem
P0769	1	14'-9"	SL	--	4'-11"	4'-11"	4'-11"	--	--	--	--	--	--	Horizontal U-Bar - Back of Stem
P0770	1	15'-2"	SL	--	5'-1'	5'-0"	5'-1'	--	--	--	--	--	--	Horizontal U-Bar - Back of Stem
P0771	1	15'-4"	SL	--	5'-2"	5'-0"	5'-2"	--	--	--	--	--	--	Horizontal U-Bar - Back of Stem
P0772	1	15'-7"	SL	--	5'-3"	5'-1"	5'-3"	--	--	--	--	--	--	Horizontal U-Bar - Back of Stem
P0773	1	16'-0"	SL	--	5'-5"	5'-2"	5'-5"	--	--	--	--	--	--	Horizontal U-Bar - Back of Stem
P0774	1	16'-3"	SL	--	5'-6"	5'-3"	5'-6"	--	--	--	--	--	--	Horizontal U-Bar - Back of Stem
P0775	1	16'-8"	SL	--	5'-8"	5'-4"	5'-8"	--	--	--	--	--	--	Horizontal U-Bar - Back of Stem
P0776	1	16'-11"	SL	--	5'-9"	5'-5"	5'-9"	--	--	--	--	--	--	Horizontal U-Bar - Back of Stem
P0777	1	17'-4"	SL	--	5'-11"	5'-6"	5'-11"	--	--	--	--	--	--	Horizontal U-Bar - Back of Stem
P0778	1	17'-7"	SL	--	6'-0"	5'-7"	6'-0"	--	--	--	--	--	--	Horizontal U-Bar - Back of Stem
P0779	1	17'-10"	SL	--	6'-1"	5'-8"	6'-1"	--	--	--	--	--	--	Horizontal U-Bar - Back of Stem
P0780	1	18'-3"	SL	--	6'-3"	5'-9"	6'-3"	--	--	--	--	--	--	Horizontal U-Bar - Back of Stem
P0781	1	18'-6"	SL	--	6'-4"	5'-10"	6'-4"	--	--	--	--	--	--	Horizontal U-Bar - Back of Stem
P0782	1	18'-11"	SL	--	6'-6"	5'-11"	6'-6"	--	--	--	--	--	--	Horizontal U-Bar - Back of Stem
P07101	1	10'-4"	PA	2'-9"	2'-5"	2'-9"	--	--	--	--	1'-9"	3'-6"	--	Horizontal Pier Nose Stem
P07102	1	11'-0"	PA	3'-0"	2'-6"	3'-0"	--	--	--	--	1'-9"	3'-6"	--	Horizontal Pier Nose Stem
P07103	1	11'-6"	PA	3'-2"	2'-7"	3'-2"	--	--	--	--	1'-9"	3'-6"	--	Horizontal Pier Nose Stem
P07104	1	12'-0"	PA	3'-5"	2'-7"	3'-5"	--	--	--	--	1'-10"	3'-8"	--	Horizontal Pier Nose Stem
P07105	1	12'-6"	PA	3'-7"	2'-8"	3'-7"	--	--	--	--	1'-10"	3'-8"	--	Horizontal Pier Nose Stem
P07106	1	13'-0"	PA	3'-9"	2'-9"	3'-9"	--	--	--	--	1'-11"	3'-10"	--	Horizontal Pier Nose Stem
P07107	1	13'-6"	PA	4'-0"	2'-9"	4'-0"	--	--	--	--	1'-11"	3'-10"	--	Horizontal Pier Nose Stem
P07108	1	14'-0"	PA	4'-2"	2'-10"	4'-2"	--	--	--	--	2'-0"	4'-0"	--	Horizontal Pier Nose Stem
P07109	1	14'-6"	PA	4'-4"	2'-11"	4'-4"	--	--	--	--	2'-0"	4'-0"	--	Horizontal Pier Nose Stem
P07110	1	15'-0"	PA	4'-7"	2'-11"	4'-7"	--	--	--	--	2'-1"	4'-2"	--	Horizontal Pier Nose Stem
P07111	1	15'-6"	PA	4'-9"	3'-0"	4'-9"	--	--	--	--	2'-1"	4'-2"	--	Horizontal Pier Nose Stem
P07112	1	16'-2"	PA	5'-0"	3'-1"	5'-0"	--	--	--	--	2'-2"	4'-4"	--	Horizontal Pier Nose Stem
P07113	1	16'-6"	PA	5'-2"	3'-1"	5'-2"	--	--	--	--	2'-2"	4'-4"	--	Horizontal Pier Nose Stem
P07114	1	17'-0"	PA	5'-4"	3'-2"	5'-4"	--	--	--	--	2'-3"	4'-6"	--	Horizontal Pier Nose Stem
P07115	1	17'-8"	PA	5'-7"	3'-3"	5'-7"	--	--	--	--	2'-3"	4'-6"	--	Horizontal Pier Nose Stem
P07116	1	18'-0"	PA	5'-9"	3'-3"	5'-9"	--	--	--	--	2'-4"	4'-8"	--	Horizontal Pier Nose Stem
P07117	1	18'-6"	PA	5'-11"	3'-4"	5'-11"	--	--	--	--	2'-4"	4'-8"	--	Horizontal Pier Nose Stem
P07118	1	19'-2"	PA	6'-2"	3'-5"	6'-2"	--	--	--	--	2'-5"	4'-10"	--	Horizontal Pier Nose Stem
P07119	1	19'-6"	PA	6'-4"	3'-5"	6'-4"	--	--	--	--	2'-5"	4'-10"	--	Horizontal Pier Nose Stem
P07120	1	20'-2"	PA	6'-7"	3'-6'	6'-7"	--	--	--	--	2'-6"	5'-0"	--	Horizontal Pier Nose Stem
P07121	1	20'-8"	PA	6'-9"	3'-7"	6'-9"	--	--	--	--	2'-6"	5'-0"	--	Horizontal Pier Nose Stem
P07122	1	21'-0"	PA	6'-11"	3'-7"	6'-11"	--	--	--	--	2'-6"	5'-0"	--	Horizontal Pier Nose Stem
P07123	1	21'-8"	PA	7'-2"	3'-8"	7'-2"	--	--	--	--	2'-7"	5'-2"	--	Horizontal Pier Nose Stem
P07124	1	22'-2"	PA	7'-4"	3'-9"	7'-4"	--	--	--	--	2'-7"	5'-2"	--	Horizontal Pier Nose Stem
P07125	1	22'-6"	PA	7'-6"	3'-9"	7'-6"	--	--	--	--	2'-8"	5'-4"	--	Horizontal Pier Nose Stem
P07126	1	23'-2"	PA	7'-9"	3'-10"	7'-9"	--	--	--	--	2'-8"	5'-4"	--	Horizontal Pier Nose Stem
P07127	1	23'-8"	PA	7'-11"	3'-11"	7'-11"	--	--	--	--	2'-9"	5'-6"	--	Horizontal Pier Nose Stem
P07128	1	24'-2"	PA	8'-2"	3'-11"	8'-2"	--	--	--	--	2'-9"	5'-6"	--	Horizontal Pier Nose Stem
P07129	1	24'-8"	PA	8'-4"	4'-0"	8'-4"	--	--	--	--	2'-10"	5'-8"	--	Horizontal Pier Nose Stem
P07130	1	25'-2"	PA	8'-6"	4'-1"	8'-6"	--	--	--	--	2'-10"	5'-8"	--	Horizontal Pier Nose Stem
P07131	1	25'-8"	PA	8'-9"	4'-1"	8'-9"	--	--	--	--	2'-11"	5'-10"	--	Horizontal Pier Nose Stem
P07132	1	26'-2"	PA	8'-11"	4'-2"	8'-11"	--	--	--	--	2'-11"	5'-10"	--	Horizontal Pier Nose Stem
P0451	10	8-6"	SL	--	2'-4"	3'-10"	2'-4"	--	--	--	--	--	--	Pier Cap Keeper Block
P0452	10	8'-11"	SL	--	2'-4"	4'-3"	2'-4"	--	--	--	--	--	--	Pier Cap Keeper Block
P0650	36	14'-1"	PR	5'-7"	2'-10"	5'-7"	--	--	--	--	--	1'-10"	--	Top of Pipe Pile
MARK	QTY.	LENGTH	TYPE	A	B	C	D	E	F	G	H	O	R	LOCATION

TranSystems

STATE OF MAINE
DEPARTMENT OF TRANSPORTATION

BH-1510(500)X

WIN 15105.00

BRIDGE NO. 3248

BRIDGE PLANS

STATE OF MAINE
EVAN C. LOWELL
NO. 9065
PROFESSIONAL ENGINEER
6-17-13

PROJ. MANAGER	S. BODGE		
DESIGN-DETAILED	J.MUCHA	BY	DATE
CHECKED-REVIEWED	E.LOWELL	D. HODGES	12/12
DESIGN2-DETAILED2		M.D'ANGELO	12/12
DESIGN3-DETAILED3			
REVISIONS 1			
REVISIONS 2			
REVISIONS 3			
REVISIONS 4			
FIELD CHANGES			

SIGNATURE
9065
P.E. NUMBER
6/17/2013
DATE

MARTIN MEMORIAL BRIDGE
ANDROSCOGGIN RIVER
RUMFORD OXFORD COUNTY

PIER 2 REINFORCEMENT SCHEDULE

SHEET NUMBER
84
OF 95

Filename: ...\084_Pier ReinfSchedPier2.dgn Division: BRIDGE Username: T SANDELL Date:6/17/2013

TYPE - BENDING DIAGRAMS

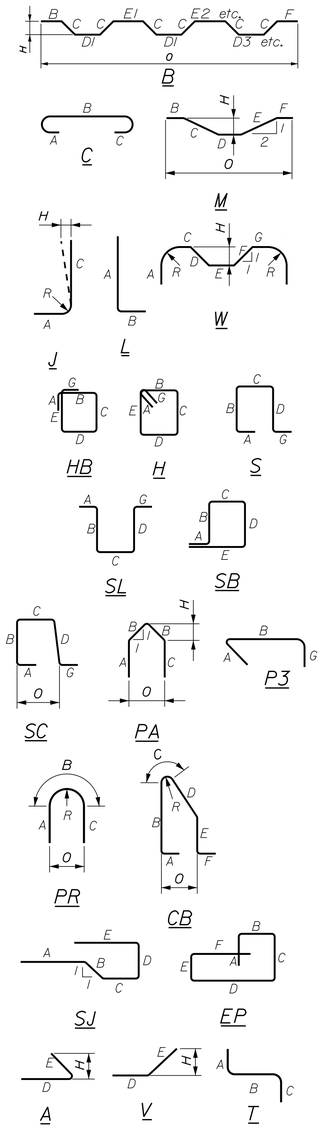

All dimensions are out-to-out of bar.

Bending details and hooks shall conform to the recommendations of the current revision of ACI Standard 318.

Reinforcing Bar: ASTM A615/A615M, Grade 420

GENERAL NOTES

1. The first two digits following the letter(s) of the mark indicate the size of the bar:

   Mark "A1602" = bar size #16
   Mark "P2501" = bar size #25
   Mark "S1950" = bar size #19

2. Each crank bar, Type B, may be replaced by two (2) straight bars (one top and one bottom) of the same bar size as the crank bar. Payment in either case shall be based on crank bars as schedule on the plans.

STRAIGHT BARS								BENT BARS															
MARK	QTY.	LENGTH	LOCATION	MARK	QTY.	LENGTH	LOCATION	MARK	QTY.	LENGTH	TYPE	A	B	C	D	E	F	G	H	O	R	LOCATION
								Pier No. 1 and Pier No. 2														
								P04101	20	4'-4"	P3	4 1/2"	3'-7"					4 1/2"				Pier Stem Horizontal Ties
								P04102	20	4'-5"	P3	4 1/2"	3'-8"					4 1/2"				Pier Stem Horizontal Ties
								P04103	20	4'-6"	P3	4 1/2"	3'-9"					4 1/2"				Pier Stem Horizontal Ties
								P04104	20	4'-6"	P3	4 1/2"	3'-9"					4 1/2"				Pier Stem Horizontal Ties
								P04105	20	4'-7"	P3	4 1/2"	3'-10"					4 1/2"				Pier Stem Horizontal Ties
								P04106	20	4'-8"	P3	4 1/2"	3'-11"					4 1/2"				Pier Stem Horizontal Ties
								P04107	20	4'-9"	P3	4 1/2"	4'-0"					4 1/2"				Pier Stem Horizontal Ties
								P04108	20	4'-10"	P3	4 1/2"	4'-1"					4 1/2"				Pier Stem Horizontal Ties
								P04109	20	4'-11"	P3	4 1/2"	4'-2"					4 1/2"				Pier Stem Horizontal Ties
								P04110	20	5'-0"	P3	4 1/2"	4'-3"					4 1/2"				Pier Stem Horizontal Ties
								P04111	20	5'-1"	P3	4 1/2"	4'-4"					4 1/2"				Pier Stem Horizontal Ties
								P04112	20	5'-2"	P3	4 1/2"	4'-5"					4 1/2"				Pier Stem Horizontal Ties
								P04113	20	5'-3"	P3	4 1/2"	4'-6"					4 1/2"				Pier Stem Horizontal Ties
								P04114	20	5'-4"	P3	4 1/2"	4'-7"					4 1/2"				Pier Stem Horizontal Ties
								P04115	20	5'-5"	P3	4 1/2"	4'-8"					4 1/2"				Pier Stem Horizontal Ties
								P04116	20	5'-6"	P3	4 1/2"	4'-9"					4 1/2"				Pier Stem Horizontal Ties
								P04117	20	5'-7"	P3	4 1/2"	4'-10"					4 1/2"				Pier Stem Horizontal Ties
								P04118	20	5'-8"	P3	4 1/2"	4'-11"					4 1/2"				Pier Stem Horizontal Ties
								P04119	20	5'-9"	P3	4 1/2"	5'-0"					4 1/2"				Pier Stem Horizontal Ties
								P04120	20	5'-10"	P3	4 1/2"	5'-1"					4 1/2"				Pier Stem Horizontal Ties
								P04121	20	5'-11"	P3	4 1/2"	5'-2"					4 1/2"				Pier Stem Horizontal Ties
								P04122	20	6'-0"	P3	4 1/2"	5'-3"					4 1/2"				Pier Stem Horizontal Ties
								P04123	20	6'-0"	P3	4 1/2"	5'-3"					4 1/2"				Pier Stem Horizontal Ties
								P04124	20	6'-1"	P3	4 1/2"	5'-4"					4 1/2"				Pier Stem Horizontal Ties
								P04125	20	6'-2"	P3	4 1/2"	5'-5"					4 1/2"				Pier Stem Horizontal Ties
								P04126	20	6'-3"	P3	4 1/2"	5'-6"					4 1/2"				Pier Stem Horizontal Ties
								P04127	20	6'-4"	P3	4 1/2"	5'-7"					4 1/2"				Pier Stem Horizontal Ties
								P04128	20	6'-4"	P3	4 1/2"	5'-7"					4 1/2"				Pier Stem Horizontal Ties
								P04129	20	6'-4"	P3	4 1/2"	5'-7"					4 1/2"				Pier Stem Horizontal Ties
								P04130	20	6'-5"	P3	4 1/2"	5'-8"					4 1/2"				Pier Stem Horizontal Ties
								P04131	20	6'-5"	P3	4 1/2"	5'-8"					4 1/2"				Pier Stem Horizontal Ties
								P04132	20	6'-5"	P3	4 1/2"	5'-8"					4 1/2"				Pier Stem Horizontal Ties
								P04133	20	6'-6"	P3	4 1/2"	5'-9"					4 1/2"				Pier Stem Horizontal Ties
								P04134	20	6'-6"	P3	4 1/2"	5'-9"					4 1/2"				Pier Stem Horizontal Ties
								P04135	20	6'-6"	P3	4 1/2"	5'-9"					4 1/2"				Pier Stem Horizontal Ties
								P04136	20	6'-6"	P3	4 1/2"	5'-9"					4 1/2"				Pier Stem Horizontal Ties
								P04137	20	6'-7"	P3	4 1/2"	5'-10"					4 1/2"				Pier Stem Horizontal Ties
								P04138	20	6'-7"	P3	4 1/2"	5'-10"					4 1/2"				Pier Stem Horizontal Ties
								P04139	20	6'-7"	P3	4 1/2"	5'-10"					4 1/2"				Pier Stem Horizontal Ties
								P04140	20	6'-8"	P3	4 1/2"	5'-11"					4 1/2"				Pier Stem Horizontal Ties
								P04141	20	6'-8"	P3	4 1/2"	5'-11"					4 1/2"				Pier Stem Horizontal Ties
								P04142	20	6'-8"	P3	4 1/2"	5'-11"					4 1/2"				Pier Stem Horizontal Ties
								P04143	20	6'-9"	P3	4 1/2"	6'-0"					4 1/2"				Pier Stem Horizontal Ties
								P04144	20	6'-9"	P3	4 1/2"	6'-0"					4 1/2"				Pier Stem Horizontal Ties
								P04145	20	6'-9"	P3	4 1/2"	6'-0"					4 1/2"				Pier Stem Horizontal Ties
								P04146	20	6'-10"	P3	4 1/2"	6'-1"					4 1/2"				Pier Stem Horizontal Ties
								P04147	20	6'-10"	P3	4 1/2"	6'-1"					4 1/2"				Pier Stem Horizontal Ties
								P04148	20	6'-10"	P3	4 1/2"	6'-1"					4 1/2"				Pier Stem Horizontal Ties
								P04149	20	6'-11"	P3	4 1/2"	6'-2"					4 1/2"				Pier Stem Horizontal Ties
								P04150	20	6'-11"	P3	4 1/2"	6'-2"					4 1/2"				Pier Stem Horizontal Ties
MARK	QTY.	LENGTH	LOCATION	MARK	QTY.	LENGTH	LOCATION	MARK	QTY.	LENGTH	TYPE	A	B	C	D	E	F	G	H	O	R	LOCATION

STATE OF MAINE
DEPARTMENT OF TRANSPORTATION

BH-1510(500)X

WIN 15105.00

BRIDGE NO. 3248

BRIDGE PLANS

STATE OF MAINE
EVAN C. LOWELL
NO. 9065
PROFESSIONAL ENGINEER

6-17-13

PROJ. MANAGER	S. BODGE		
DESIGN-DETAILED	J.MUCHA	D. HODGES	12/12
CHECKED-REVIEWED	E.LOWELL	M.D'ANGELO	12/12
DESIGN2-DETAILED2			
DESIGN3-DETAILED3			
REVISIONS 1			
REVISIONS 2			
REVISIONS 3			
REVISIONS 4			
FIELD CHANGES			

SIGNATURE
9065
P.E. NUMBER
6/17/2013
DATE

MARTIN MEMORIAL BRIDGE
ANDROSCOGGIN RIVER
RUMFORD OXFORD COUNTY

MISCELLANEOUS PIER
REINFORCEMENT SCHEDULE

SHEET NUMBER
85
OF 95

TranSystems

Filename: ...\085_Pier ReinfSchedPier3.dgn Division: BRIDGE Username: T SANDELL Date:6/17/2013

TYPE - BENDING DIAGRAMS

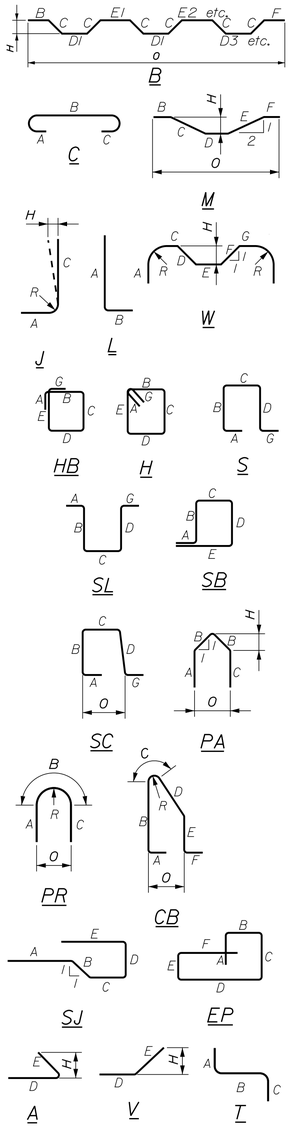

All dimensions are out-to-out of bar.

Bending details and hooks shall conform to the recommendations of the current revision of ACI Standard 318.

Reinforcing Bar: ASTM A615/A615M, Grade 420

GENERAL NOTES

1. The first two digits following the letter(s) of the mark indicate the size ofthe bar:

   Mark "A1602" = bar size #16
   Mark "P2501" = bar size #25
   Mark "S1950" = bar size #19

2. Each crank bar, Type B, may be replaced by two (2) straight bars (one top and one bottom) of the same bar size as the crank bar. Payment in either case shall be based on crank bars as schedule on the plans.

STRAIGHT BARS

MARK	QTY.	LENGTH	LOCATION	MARK	QTY.	LENGTH	LOCATION
			Deck				
S501	1045	37'-3"	Horizontal				
S502	176	43'-7"	Longitudinal				
S503	176	59'-7"	Longitudinal				
S504	88	23'-7"	Longitudinal				
S505	88	56'-8"	Longitudinal				
S506E	12	33'-4"	Longitudinal				
S507E	12	35'-7"	Longitudinal				
S508E	12	42'-8"	Longitudinal				
S509E	12	43'-7"	Longitudinal				
S510E	12	59'-7"	Longitudinal				
S511E	6	23'-7"	Longitudinal				
S512E	6	56'-8"	Longitudinal				
S601	1018	37'-3"	Horizontal				
S602	104	33'-4"	Longitudinal				
S603	104	35'-7"	Longitudinal				
S604	104	42'-8"	Longitudinal				
			Transition Barrier				
TB500E	40	4'-6"					
TB501E	8	2'-2"					
TB502E	8	2'-0"					
TB503E	8	1'-10"					
TB504E	8	1'-8"					
TB505E	8	1'-6"					
TB506E	8	4'-8"					
TB600E	16	2'-7"					
MARK	QTY.	LENGTH	LOCATION	MARK	QTY.	LENGTH	LOCATION

BENT BARS

MARK	QTY.	LENGTH	TYPE	A	B	C	D	E	F	G	H	O	R	LOCATION
								Deck						
S651	2046	8'-1"	C	0'-8"	7'-5"	0	--	--	--	--	--	--	--	Transverse - Slab Overhangs
S652	104	7'-4"	S	2'-3"	1'-1"	4'-0"	--	--	--	--	--	--	--	Vertical U-Bar - Diaphragm Ends
S551E	1406	5'-2"	SC	4"	16"	15"	16"	--	--	7"	--	16"	--	Curb
S552	104	11'-1"	S	2'-3"	6'-4"	2'-3"	--	--	--	--	--	--	--	Vertical U-Bar-Diaphragm Stirrups
								Transition Barrier						
TB550E	16	2'-7"	EP	0'-11"	2'-4"	1'-3"	3'-4"	0'-10"	1'-6"	--	--	--	--	
TB650E	20	5'-10"	S	--	2'-4"	1'-1"	2'-4"	--	--	--	--	--	--	
TB651E	8	7'-11"	H	0'-6"	0'-8"	2'-9"	0'-8"	2'-9"	--	0'-6"	--	--	--	
TB652E	20	8'-9"	H	0'-6"	1'-1"	2'-9"	1'-1"	2'-9"	--	0'-6"	--	--	--	
MARK	QTY.	LENGTH	TYPE	A	B	C	D	E	F	G	H	O	R	LOCATION

TranSystems

STATE OF MAINE
DEPARTMENT OF TRANSPORTATION

BH-1510(500)X

WIN 15105.00

BRIDGE NO. 3248

BRIDGE PLANS

STATE OF MAINE EVAN C. LOWELL NO. 9065 LICENSED PROFESSIONAL ENGINEER

6-17-13

SIGNATURE		
9065		
P.E. NUMBER		
6/17/2013		
DATE		

PROJ. MANAGER	S. BOOGE	
DESIGN-DETAILED	J.MUCHA	BY
CHECKED-REVIEWED	E. LOWELL	M.D'ANGELO
DESIGN2-DETAILED2		
DESIGN3-DETAILED3		
REVISIONS 1		
REVISIONS 2		
REVISIONS 3		
REVISIONS 4		
FIELD CHANGES		

DATE
12/12
12/12

MARTIN MEMORIAL BRIDGE
ANDROSCOGGIN RIVER
RUMFORD OXFORD COUNTY

DECK REINFORCEMENT SCHEDULE

SHEET NUMBER
86
OF 95

Filename: ...\Road\086_Deck ReinfSched.dgn Division: BRIDGE Username: T SANDELL Date:6/17/2013

TYPE - BENDING DIAGRAMS

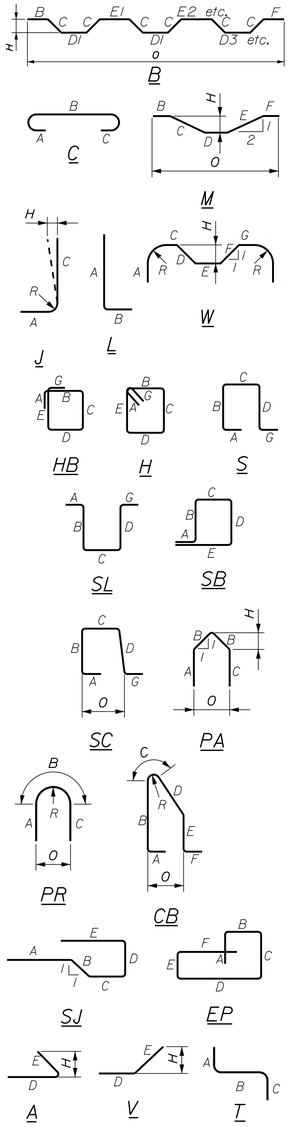

All dimensions are out-to-out of bar.

Bending details and hooks shall conform to the recommendations of the current revision of ACI Standard 318.

Reinforcing Bar: ASTM A615/A615M, Grade 420

GENERAL NOTES

1. The first two digits following the letter(s) of the mark indicate the size of the bar:

   Mark "A1602" = bar size #16
   Mark "P2501" = bar size #25
   Mark "S1950" = bar size #19

2. Each crank bar, Type B, may be replaced by two (2) straight bars (one top and one bottom) of the same bar size as the crank bar. Payment in either case shall be based on crank bars as schedule on the plans.

STRAIGHT BARS

MARK	QTY.	LENGTH	LOCATION
			Abutment 1
WA0401	20	37'-5"	Transverse - Abut. Stem
WA0501	42	10'-6"	Longitudinal - Abut. Footing (Top)
WA0502	22	43'-0"	Transverse - Abut. Footing
WA0503	22	15'-6"	Transverse - S. Wingwall Footing
WA0504	22	14'-6"	Transverse - N. Wingwall Footing
WA05102	1	12'-1"	Vertical - S. Wingwall Front Face
WA0505	9	5'-0"	Horizontal - Footing Flare Bars (Top)
WA0506	8	10'-0"	Horizontal - Footing Flare Bars (Top)
WA0507	2	32'-7"	Transverse - Abut. Stem Overhang
WA0508	26	4'-8"	Transverse - S. Wingwall
WA0509	32	7'-2"	Transverse - N. Wingwall
WA0510	15	4'-4"	Transverse - S. Wingwall
WA0511	17	4'-4"	Transverse - N. Wingwall
WA0512	4	17'-5"	Vertical - Abut. S. Corner
WA0513	4	18'-6"	Vertical - Abut. N. Corner
WA05101	1	11'-9"	Vertical - S. Wingwall Front Face
WA05103	1	12'-5"	Vertical - S. Wingwall Front Face
WA05104	1	12'-9"	Vertical - S. Wingwall Front Face
WA05105	1	13'-2"	Vertical - S. Wingwall Front Face
WA05106	1	13'-6"	Vertical - S. Wingwall Front Face
WA05107	1	13'-10"	Vertical - S. Wingwall Front Face
WA05108	1	14'-2"	Vertical - S. Wingwall Front Face
WA05109	1	14'-6"	Vertical - S. Wingwall Front Face
WA05110	1	14'-10"	Vertical - S. Wingwall Front Face
WA05111	1	15'-3"	Vertical - S. Wingwall Front Face
WA05112	1	15'-7"	Vertical - S. Wingwall Front Face
WA05113	1	15'-11"	Vertical - S. Wingwall Front Face
WA05114	1	16'-3"	Vertical - S. Wingwall Front Face
WA05115	1	16'-7"	Vertical - S. Wingwall Front Face
WA05116	1	16'-10"	Vertical - S. Wingwall Front Face
WA05117	1	14'-1"	Vertical - N. Wingwall Front Face
WA05118	1	14'-5"	Vertical - N. Wingwall Front Face
WA05119	1	14'-9"	Vertical - N. Wingwall Front Face
WA05120	1	15'-2"	Vertical - N. Wingwall Front Face
WA05121	1	15'-6"	Vertical - N. Wingwall Front Face
WA05122	1	15'-10"	Vertical - N. Wingwall Front Face
WA05123	1	16'-3"	Vertical - N. Wingwall Front Face
WA05124	1	16'-7"	Vertical - N. Wingwall Front Face
WA05125	1	16'-10"	Vertical - N. Wingwall Front Face
WA05126	1	17'-3"	Vertical - N. Wingwall Front Face
WA05127	1	17'-7"	Vertical - N. Wingwall Front Face
WA05128	1	17'-11"	Vertical - N. Wingwall Front Face
WA05129	1	18'-3"	Vertical - N. Wingwall Front Face
WA05130	1	7'-0"	Vertical - S. Wingwall Front Face
WA0601	38	10'-6"	Transverse - Wingwall Footing (Top)
WA0602	3	25'-0"	Transverse - Abut. Bearing Seat
WA0603	3	14'-7"	Transverse - Abut. Bearing Seat
WA0604	23	1'-6"	Vertical - Abut. Back Wall Overhang
WA0701	62	10'-6"	Transverse - Footing (Bottom)
WA0702	9	5'-0"	Horizontal - Footing Flare Bars (Bottom)
WA0703	8	10'-0"	Horizontal - Footing Flare Bars (Bottom)
WA0704	38	3'-6"	Vertical - Footing Front Face
WA0705	38	8'-9"	Vertical - Abut. Front Face
WA0706	9	27'-0"	Transverse - Front Face Abut.
WA0707	9	16'-2"	Transverse - Front Face Abut.
WA0708	9	33'-5"	Transverse - Abut. Back Face
WA0709	9	19'-3"	Transverse - Abut. Back Face
WA0801	38	5'-6"	Vertical - Abut. Back Face
WA08101	1	11'-9"	Vertical - S. Wingwall Back Face
WA08102	1	12'-0"	Vertical - S. Wingwall Back Face
WA08103	1	12'-4"	Vertical - S. Wingwall Back Face
WA08104	1	12'-8"	Vertical - S. Wingwall Back Face
WA08105	1	12'-11"	Vertical - S. Wingwall Back Face
WA08106	1	13'-3"	Vertical - S. Wingwall Back Face
WA08107	1	13'-10	Vertical - S. Wingwall Back Face
WA08108	1	14'-4"	Vertical - S. Wingwall Back Face
WA08109	1	14'-11"	Vertical - S. Wingwall Back Face
WA08110	1	15'-6"	Vertical - S. Wingwall Back Face
WA08111	1	16'-0"	Vertical - S. Wingwall Back Face
WA08112	1	16'-7"	Vertical - S. Wingwall Back Face
WA08113	1	16'-11	Vertical - S. Wingwall Back Face
MARK	QTY.	LENGTH	LOCATION

STRAIGHT BARS

MARK	QTY.	LENGTH	LOCATION
			Abutment 1
WA08114	1	13'-10"	Vertical - N. Wingwall Back Face
WA08115	1	14'-2"	Vertical - N. Wingwall BackFace
WA08116	1	14'-6"	Vertical - N. Wingwall BackFace
WA08117	1	14'-11"	Vertical - N. Wingwall BackFace
WA08118	1	15'-3"	Vertical - N. Wingwall BackFace
WA08119	1	15'-7"	Vertical - N. Wingwall BackFace
WA08120	1	15'-11"	Vertical - N. Wingwall BackFace
WA08121	1	16'-4"	Vertical - N. Wingwall BackFace
WA08122	1	16'-9"	Vertical - N. Wingwall BackFace
WA08123	1	17'-5"	Vertical - N. Wingwall BackFace
WA08124	1	18'-1"	Vertical - N. Wingwall BackFace

BENT BARS

MARK	QTY.	LENGTH	TYPE	A	B	C	D	E	F	G	H	O	R	LOCATION
							Abutment 1							
WA0451	38	4'-9"	S	2'-2"	5"	2'-2"	--	--	--	--	--	--		Vertical - Abut. Stem
WA0551	29	6'-7"	J	5'-7"	--	10"	--	--	--	--	--	--	6"	Vertical - Wingwall Footing Front Face
WA0552	56	7'-8"	S	3'-9"	7"	3'-9"	--	--	--	--	--	--	--	Vertical - Abut. Stem
WA0553	56	5'-7"	S	2'-7"	1'-0"	2'-2"	--	--	--	--	--	--	--	Vertical - Abut. Stem
WA0554	38	15'-8"	S	7'-1"	1'-7"	7'-1"	--	--	--	--	--	--	--	Vertical - Abut. Stem
WA0555	15	4'-5"	V	--	--	--	2'-3"	2'-2"	--	--	11"	--	--	Horizontal - S. Wingwall Corner Back Face
WA0556	18	4'-6"	V	--	--	--	2'-5"	2'-1"	--	--	2'-1"	--	--	Horizontal - N. Wingwall Corner Back Face
WA0557	36	1'-3"	S	1'-3"	5'-1"	1'-3"	--	--	--	--	--	--	--	Horizontal - Abut. Corners
WA0558	10	7'-5"	S	2'-10"	1'-9"	2'-10"	--	--	--	--	--	--	--	Vertical - Abut. Corners
WA0559	15	10'-10"	V	--	--	--	9'-7"	1'-3"	--	--	7"	--	--	Horizontal - S. Wingwall Abut. Corner Front Face
WA0560	18	6'-4"	V	--	--	--	5'-0"	1'-4"	--	--	1'-3"	--	--	Horizontal - N. Wingwall Abut. Corner Front Face
WA0561	1	9'-8"	V	--	--	--	8'-5"	1'-3"	--	--	7"	--	--	Horizontal - S. Wingwall Corner Back Face
WA0562	1	7'-1"	V	--	--	--	5'-10'	1'-3"	--	--	7"	--	--	Horizontal - S. Wingwall Corner Back Face
WA0563	1	4'-6"	V	--	--	--	3'-3"	1'-3"	--	--	7"	--	--	Horizontal - S. Wingwall Corner Back Face
WA0564	1	5'-3"	V	--	--	--	3'-11"	1'-4"	--	--	1'-3"	--	--	Horizontal - N. Wingwall Corner Back Face
WA0651	38	6'-1"	S	8"	4'-11"	8"	--	--	--	--		--	--	Vertical - Abut. Bearing Seat
WA0851	38	9'-0"	J	7'-6"	--	1'-4"	--	--	--	--	6"	--	--	Vertical - Abut. Back face Bent Bar
WA0852	24	8'-0"	J	6'-6"	--	1'-4"	--	--	--	--	8"	--	--	Vertical - Wingwalls Back Face Bent Bar
WA0650	50	13'-8"	PR	6'-0"	1'-7"	6'-0"	--	--	--	--	--	1'-1"	--	Top of Pipe Pile
MARK	QTY.	LENGTH	TYPE	A	B	C	D	E	F	G	H	O	R	LOCATION

STATE OF MAINE
DEPARTMENT OF TRANSPORTATION

BH-1510(500)X

WIN 15105.00

BRIDGE NO. 3248

BRIDGE PLANS

STATE OF MAINE
EVAN C. CARROLL
No. 9065
PROFESSIONAL ENGINEER
6-17-13

PROJ. MANAGER	S. BODGE		
DESIGN-DETAILED	J.MUCHA	D. HODGES	12/12
CHECKED-REVIEWED	E.LOWELL	M.D'ANGELO	12/12
DESIGN2-DETAILED2			
DESIGN3-DETAILED3			
REVISIONS 1			
REVISIONS 2			
REVISIONS 3			
REVISIONS 4			
FIELD CHANGES			

SIGNATURE
9065
P.E. NUMBER
6/17/2013
DATE

MARTIN MEMORIAL BRIDGE
ANDROSCOGGIN RIVER
RUMFORD OXFORD COUNTY

ABUTMENT 1
REINFORCEMENT SCHEDULE

SHEET NUMBER
87
OF 95

TranSystems

Filename: ...\087_Abutment1 ReinfSched_Philo.dgn Division: BRIDGE Username: T SANDELL Date:6/17/2013

TYPE - BENDING DIAGRAMS

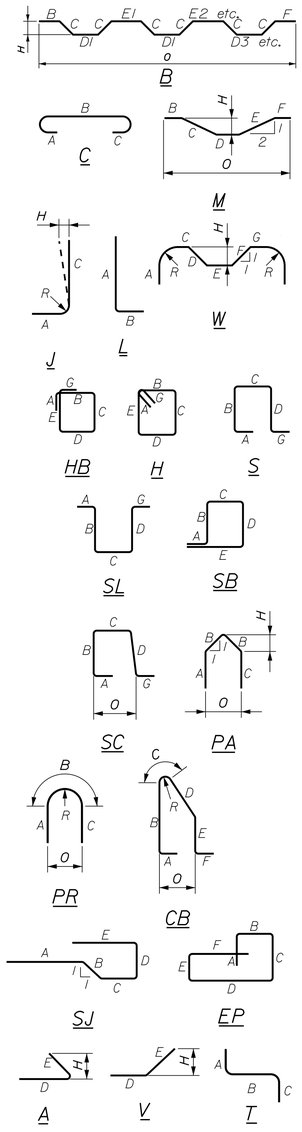

All dimensions are out-to-out of bar.

Bending details and hooks shall conform to the recommendations of the current revision of ACI Standard 318.

Reinforcing Bar: ASTM A615/A615M, Grade 420

GENERAL NOTES

1. The first two digits following the letter(s) of the mark indicate the size of the bar:

   Mark "A1602" = bar size #16
   Mark "P2501" = bar size #25
   Mark "S1950" = bar size #19

2. Each crank bar, Type B, may be replaced by two (2) straight bars (one top and one bottom) of the same bar size as the crank bar. Payment in either case shall be based on crank bars as schedule on the plans.

STRAIGHT BARS				STRAIGHT BARS			
MARK	QTY.	LENGTH	LOCATION	MARK	QTY.	LENGTH	LOCATION
			Abutment 2				Abutment 2
EA0401	20	36'-2"	Transverse - Abut. Stem	EA0707	15	16'-2"	Transverse - Abut. Back Face
EA0501	35	10'-6"	Longitudinal - Abut. Footing Top Bar	EA0801	75	10'-6"	Longitudinal - Abut. Footing Bottom
EA0502	22	43'-0"	Transverse - Abut Footing	EA0802	9	5'-0"	Horizontal - Footing Flare Bars (Bottom)
EA0503	22	27'-6"	Transverse - N. Wingwall Footing	EA0803	8	10'-0"	Horizontal - Footing Flare Bars (Bottom)
EA0504	22	19'-3"	Transverse - S. Wingwall Footing	EA0804	75	8'-9"	Vertical - Abut Backwall
EA0505	9	5'-0"	Horizontal - Footing Flare Bars (Top)	EA0901	1	17'-11"	Transverse - N. Wingwall Back Face
EA0506	8	10'-0"	Horizontal - Footing Flare Bars (Top)	EA0902	1	18'-1"	Transverse - N. Wingwall Back Face
EA0507	2	35'-9"	Transverse - Abut. Stem Overhang	EA0903	1	18'-3"	Transverse - N. Wingwall Back Face
EA0508	36	16'-8"	Transverse - N. Wingwall	EA0904	1	18'-5"	Transverse - N. Wingwall Back Face
EA0509	38	11'-11"	Transverse - S. Wingwall	EA0905	1	18'-6"	Transverse - N. Wingwall Back Face
EA0510	21	4'-4"	Transverse - N. Wingwall Front Face	EA0906	1	18'-8"	Transverse - N. Wingwall Back Face
EA0511	4	22'-3"	Vertical - Abut. N. Wingwall Corner	EA0907	1	18'-10"	Transverse - N. Wingwall Back Face
EA0512	21	4'-4"	Transverse - S. Wingwall Front Face	EA0908	1	19'-0"	Transverse - N. Wingwall Back Face
EA0513	4	22'-10"	Vertical - Abut. N. Wingwall Corner	EA0909	1	19'-2"	Transverse - N. Wingwall Back Face
EA0514	1	14'-9"	Transverse - N. Wingwall	EA0910	1	19'-4"	Transverse - N. Wingwall Back Face
EA0515	1	8'-11"	Transverse - N. Wingwall	EA0911	1	19'-6"	Transverse - N. Wingwall Back Face
EA0516	1	10'-4"	Transverse - S. Wingwall Front Face	EA0912	1	19'-8"	Transverse - N. Wingwall Back Face
EA0510 1	1	17'-9"	Vertical - N. Wingwall Front Face	EA0913	1	19'-10"	Transverse - N. Wingwall Back Face
EA0510 2	1	17'-11"	Vertical - N. Wingwall Front Face	EA0914	1	20'-0"	Transverse - N. Wingwall Back Face
EA0510 3	1	18'-1"	Vertical - N. Wingwall Front Face	EA0915	1	20'-2"	Transverse - N. Wingwall Back Face
EA0510 4	1	18'-3'	Vertical - N. Wingwall Front Face	EA0916	1	20'-4"	Transverse - N. Wingwall Back Face
EA0510 5	1	18'-4"	Vertical - N. Wingwall Front Face	EA0917	1	20'-6"	Transverse - N. Wingwall Back Face
EA0510 6	1	18'-6"	Vertical - N. Wingwall Front Face	EA0918	1	20'-8"	Transverse - N. Wingwall Back Face
EA0510 7	1	18'-8"	Vertical - N. Wingwall Front Face	EA0919	1	20'-10"	Transverse - N. Wingwall Back Face
EA0510 8	1	18'-10"	Vertical - N. Wingwall Front Face	EA0920	1	21'-1"	Transverse - N. Wingwall Back Face
EA0510 9	1	19'-0"	Vertical - N. Wingwall Front Face	EA0921	1	21'-4"	Transverse - N. Wingwall Back Face
EA0511 0	1	19'-2"	Vertical - N. Wingwall Front Face	EA0922	1	21'-8"	Transverse - N. Wingwall Back Face
EA0511 1	1	19'-4"	Vertical - N. Wingwall Front Face	EA0923	1	21'-11"	Transverse - N. Wingwall Back Face
EA0511 2	1	19'-6"	Vertical - N. Wingwall Front Face	EA0924	1	22'-2"	Transverse - N. Wingwall Back Face
EA0511 3	1	19'-7"	Vertical - N. Wingwall Front Face	EA0925	1	22'-5"	Transverse - N. Wingwall Back Face
EA0511 4	1	19'-9"	Vertical - N. Wingwall Front Face	EA0926	1	19'-0"	Transverse - S. Wingwall Back Face
EA0511 5	1	19'-11"	Vertical - N. Wingwall Front Face	EA0927	1	19'-3"	Transverse - S. Wingwall Back Face
EA0511 6	1	20'-1"	Vertical - N. Wingwall Front Face	EA0928	1	19'-5"	Transverse - S. Wingwall Back Face
EA0511 7	1	20'-3"	Vertical - N. Wingwall Front Face	EA0929	1	19'-8"	Transverse - S. Wingwall Back Face
EA0511 8	1	20'-5"	Vertical - N. Wingwall Front Face	EA0930	1	19'-11"	Transverse - S. Wingwall Back Face
EA0511 9	1	20'-9'	Vertical - N. Wingwall Front Face	EA0931	1	20'-1"	Transverse - S. Wingwall Back Face
EA0512 0	1	20'-11	Vertical - N. Wingwall Front Face	EA0932	1	20'-4"	Transverse - S. Wingwall Back Face
EA0512 1	1	21'-1"	Vertical - N. Wingwall Front Face	EA0933	1	20'-7"	Transverse - S. Wingwall Back Face
EA0512 2	1	21'-3"	Vertical - N. Wingwall Front Face	EA0934	1	20'-9"	Transverse - S. Wingwall Back Face
EA0512 3	1	21'-5"	Vertical - N. Wingwall Front Face	EA0935	1	21'-0"	Transverse - S. Wingwall Back Face
EA0512 4	1	21'-7"	Vertical - N. Wingwall Front Face	EA0936	1	21'-3"	Transverse - S. Wingwall Back Face
EA0512 5	1	21'-10"	Vertical - N. Wingwall Front Face	EA0937	1	21'-5"	Transverse - S. Wingwall Back Face
EA0512 6	1	22'-0"	Vertical - N. Wingwall Front Face	EA0938	1	21'-9"	Transverse - S. Wingwall Back Face
EA0512 7	1	22'-2"	Vertical - N. Wingwall Front Face	EA0939	1	22'-2"	Transverse - S. Wingwall Back Face
EA0512 8	1	22'-4"	Vertical - N. Wingwall Front Face	EA0940	1	22'-7"	Transverse - S. Wingwall Back Face
EA0512 9	1	18'-11"	Vertical - S. Wingwall Front Face				
EA0513 0	1	19'-2"	Vertical - S. Wingwall Front Face				
EA0513 1	1	19'-5"	Vertical - S. Wingwall Front Face				
EA0513 2	1	19'-7"	Vertical - S. Wingwall Front Face				
EA0513 3	1	19'-11"	Vertical - S. Wingwall Front Face				
EA0513 4	1	20'-1"	Vertical - S. Wingwall Front Face				
EA0513 5	1	20'-3"	Vertical - S. Wingwall Front Face				
EA0513 6	1	20'-6"	Vertical - S. Wingwall Front Face				
EA0513 7	1	20'-8"	Vertical - S. Wingwall Front Face				
EA0513 8	1	20'-11"	Vertical - S. Wingwall Front Face				
EA0513 9	1	21'-2"	Vertical - S. Wingwall Front Face				
EA0514 0	1	21'-4"	Vertical - S. Wingwall Front Face				
EA0514 1	1	21'-9"	Vertical - S. Wingwall Front Face				
EA0514 2	1	21'-11"	Vertical - S. Wingwall Front Face				
EA0514 3	1	22'-2"	Vertical - S. Wingwall Front Face				
EA0514 4	1	22'-5"	Vertical - S. Wingwall Front Face				
EA0514 5	1	22'-8"	Vertical - S. Wingwall Front Face				
EA0601	3	25'-2"	Transverse - Abut. Bearing Seat				
EA0602	3	14'-9"	Transverse - Abut. Bearing Seat				
EA0603	23	1'-6"	Vertical - Abut. Stem				
EA0701	40	10'-6"	Longitudinal - Footings Bottom Bar				
EA0702	38	3'-0"	Vertical - Abut. Footing Front Face				
EA0703	38	13'-9"	Vertical - Abut. Frontwall				
EA0704	15	27'-0"	Transverse - Abut. Front Face				
EA0705	15	16'-2"	Transverse - Abut. Back Face				
EA0706	15	27'-0"	Transverse - Abut. Front Face				
MARK	QTY.	LENGTH	LOCATION	MARK	QTY.	LENGTH	LOCATION

BENT BARS

MARK	QTY.	LENGTH	TYPE	A	B	C	D	E	F	G	H	O	R	LOCATION
						Abutment 2								
EA0451	38	4'-9"	S	2'-2"	2'-2"	--	--	--	--	--	--	--	--	Vertical - Abut. Stem
EA0551	45	8'-4"	J	7'-6"	--	10"	--	--	--	--	--	--	4"	Vertical - Wingwall Footing Front Face
EA0552	56	7'-9"	S	3'-8"	3'-8"	--	--	--	--	--	--	--	--	Vertical - Abut. Stem
EA0553	56	5'-9"	S	2'-7"	1'-0"	2'-2"	--	--	--	--	--	--	--	Vertical - Abut. Stem
EA0554	38	15'-9"	S	7'-1"	1'-7"	7'-1"	--	--	--	--	--	--	--	Vertical - Abut. Stem
EA0555	21	4'-5"	V	--	--	2'-3"	2'-2"	--	--	--	10"	--	--	Horizontal - N. Wingwall Corner Back Face
EA0556	21	10'-10"	V	--	--	9'-7"	1'-3"	--	--	--	7"	--	--	Horizontal - N. Wingwall Abut. Corner
EA0557	46	7'-5"	S	1'-2"	5'-1"	1'-2"	--	--	--	--	--	--	--	Horizontal- Wingwall Abut. Corner
EA0558	10	7'-5"	S	2'-10"	1'-9"	2'-10"	--	--	--	--	--	--	--	Vertical - Abut. Wingwall Corner
EA0559	21	4'-6"	V	--	--	2'-5"	2'-1"	--	--	--	1'-10"	--	--	Horizontal - S. Wingwall Corner
EA0560	22	6'-5"	V	--	--	5'-1"	1'-4"	--	--	--	1'-3"	--	--	Horizontal - Abut. S. Wingwall Corner
EA0561	1	8'-4"	V	--	--	7'-1"	1'-3"	--	--	--	7"	--	--	Horizontal - S. Wingwall Abut. Corner
EA0651	38	6'-3"	S	8"	4'-11"	8"	--	--	--	--	--	--	--	Horizontal - Abut. Bearing Seat
EA0851	75	12'-3"	J	10'-8"	--	1'-4"	--	--	--	--	--	--	4"	Vertical - Abut. Footing Back Face
EA0951	40	8'-0"	J	6'-6"	--	1'-8"	--	--	--	--	--	--	9"	Vertical - Wingwall Footing Back Face
EA0650	64	13'-8"	PR	6'-0"	1'-7"	6'-0"	--	--	--	--	--	1'-1"	--	Top of Pipe Pile

STATE OF MAINE
DEPARTMENT OF TRANSPORTATION

BH-1510(500)X

WIN 15105.00

BRIDGE NO. 3248

BRIDGE PLANS

STATE OF MAINE EVAN C. LOWELL NO. 9065 PROFESSIONAL ENGINEER

6-17-13

PROJ. MANAGER	S. BODGE		
DESIGN-DETAILED	J.MUCHA	BY	DATE
CHECKED-REVIEWED	E.LOWELL	D. HODGES	12/12
DESIGN2-DETAILED2		M.D'ANGELO	12/12
DESIGN3-DETAILED3			
REVISIONS 1			
REVISIONS 2			
REVISIONS 3			
REVISIONS 4			
FIELD CHANGES			

SIGNATURE

9065
P.E. NUMBER

6/17/2013
DATE

MARTIN MEMORIAL BRIDGE
ANDROSCOGGIN RIVER
RUMFORD OXFORD COUNTY

ABUTMENT 2
REINFORCEMENT SCHEDULE

SHEET NUMBER
88
OF 95

TranSystems

Filename: ...\088_Abutment2 ReinfSched_Phila.dgn Division: BRIDGE Username: T SANDELL Date:6/17/2013

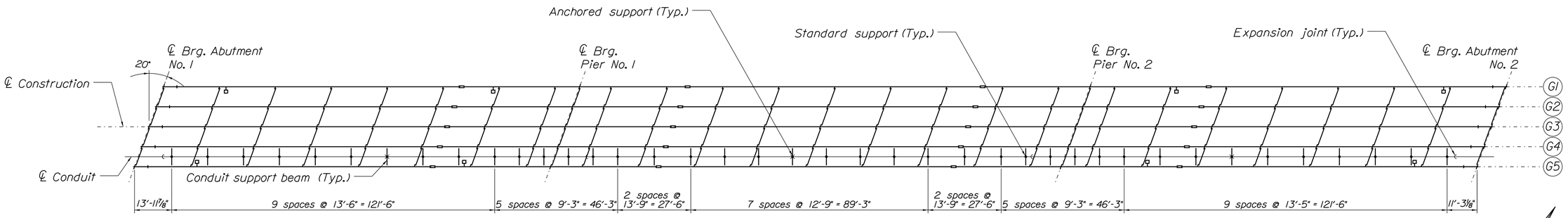

LOCATION PLAN

Dimensions are horizontal

MATERIAL LIST

ITEM NO.	DESCRIPTION	QUANTITY
1	4" IPS fiberglass conduit with threaded ends	2240 ft
2	2W x 2H standard 4" conduit support	36
3	2W x 2H anchored 4" conduit support	3
4	4" expansion joint	16
5	4" fiberglass to PVC adapter	8
6	4" split anchor rings	24
7	L6x4x½ galvanized conduit support beam, 7'-3½" long	42
8	L6x4x½ galvanized clip angle, 6" long	84
9	¾" high strength bolt set for clip angle to girder web connection: ¾" dia. x 2¾" long ASTM A325 Type 1 bolt, one hex nut, and two hardened washers. All parts galvanized.	168
10	¾" high strength bolt set for clip angle to conduit support beam connection: ¾" dia. x 2½" long ASTM A325 Type 1 bolt, one hex nut, and two hardened washers. All parts galvanized.	168
11	5" dia. ASTM A53, schedule 40 steel pipe, galvanized, 25'-0" long	8
11	Adhesive for bonding conduit	*

* Quantity as recommended by conduit manufacturer.

SUPERSTRUCTURE NOTES

1. Contractor shall verify all dimensions before fabrication and installation of conduits and supports.

2. Fiberglass duct supports are designed for a maximum cable load of 8.0 lbs per ft per duct. The total cable and conduit load at a support is 600 lbs maximum.

3. 4" straight couplings shall be installed as required.

4. The Contractor is required to comply with all nationally accepted safety practices, OSHA and any other safety requirements imposed by the Owner, Agency or any other parties which may have jurisdiction over safety.

5. Design of 4" duct based on fiberglass conduit with the following characteristics listed in A thru D:

   A. 4" fiberglass ducts are to have threaded joints with 1000 lbs pull out strength unbonded.

   B. 4" dia. fiberglass ducts are to have ultimate tensile strength of 10,500 psi per ASTM D-2105.

   C. 4" IPS with 0.07" wall thickness.

   D. Capable of main/interior hanger support spans of up to 13'-9" for 8 lbs/ft cable based on not exceeding 5/8" midspan deflection.

6. During installation, the duct expansion joints must be set to the proper length according to the ambient temperature. Refer to the expansion joint manufacturer's instructions.

7. All connections between duct sections, gasketed expansion joints, split anchor rings, adapters and couplings are to be bonded. Refer to manufacturer's instructions for bonding procedures.

8. Cap the ends of the ducts if the underground portion of the work is not done at the same time as the bridge portion.

9. Conduit support beams and clip angles shall be steel and meet the requirements of ASTM A36 with a minimum yield strength of 36 ksi, galvanized. High strength bolts shall meet the requirments of ASTM A325 with nuts and hardened washers, all galvanized. Threaded rod shall meet the requirements of ASTM F1554 Grade 36 with nuts and washers, all galvanized. Steel pipe sleeves to be ASTM A53 schedule 40, galvanized.

10. Angles and pipes shall be galvanized in accordance with ASTM A123. Bolts, threaded rods, nuts, and washers shall be galvanized in accordance with ASTM A153.

11. All 3/4" dia. high strength bolted connections shall be considered slip-critical connections. They shall be tightened in accordance with AISC "Specification for Structural Joints Using High-Strength Bolts", Section 8.2 to a minimum fastener pretension of 28 kips. Faying surfaces in contact at connections shall be prepared in accordance with Section 3.2.2. Uncoated faying surfaces shall be free of scale and coatings and galvanized faying surfaces shall be hand wire brush roughened.

12. Fiberglass components shall be manufactured using isophthalic polyester resin, be grey in color, and contain UV inhibitors. They shall also contain a fire retardent and exhibit low smoke generation.

13. Reinforcement around utility openings at each abutments by others.

14. Conduit support spacing can be modified as required to avoid scupper drain pipes, etc., as long as the conduit support spacing does not exceed 13'-9".

TranSystems

STATE OF MAINE
DEPARTMENT OF TRANSPORTATION

BH-1510(500)X

WIN 15105.00

BRIDGE NO. 3248

BRIDGE PLANS

STATE OF MAINE
EVAN C. LOWELL
NO. 9065
PROFESSIONAL ENGINEER

6-17-13

PROJ. MANAGER	S. BIDGE	BY	DATE
DESIGN-DETAILED	C. GAMACHE	C. GAMACHE	4/13
CHECKED-REVIEWED	E. LOWELL	T. STUDRIS	4/13
DESIGN2-DETAILED2			
DESIGN3-DETAILED3			
REVISIONS 1			
REVISIONS 2			
REVISIONS 3			
REVISIONS 4			
FIELD CHANGES			

SIGNATURE
9065
P.E. NUMBER
6/17/2013
DATE

MARTIN MEMORIAL BRIDGE
ANDROSCOGGIN RIVER
RUMFORD OXFORD COUNTY

CONDUIT SUPPORT DETAILS
LOCATION PLAN

SHEET NUMBER
89
OF 95

Filename: ...\089_Util.Location Plan.dgn Division: BRIDGE Username: T SANDELL Date:6/17/2013

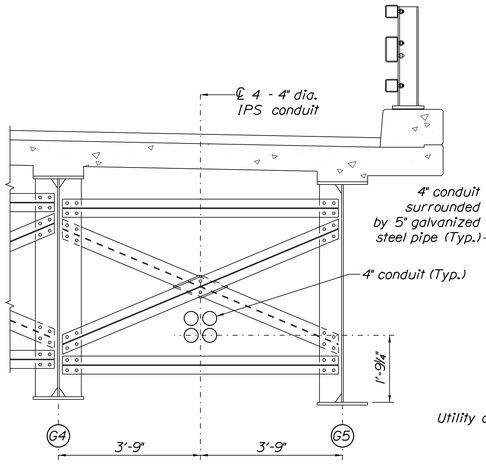

SECTION AT INTERMEDIATE CROSS FRAME

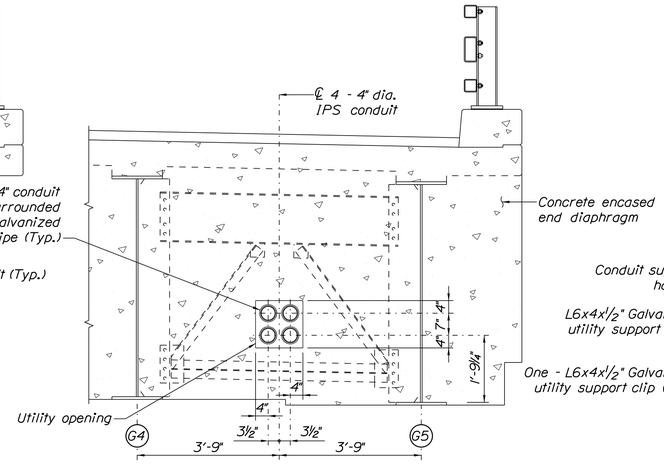

SECTION AT CONCRETE ENCASED END DIAPHRAGM

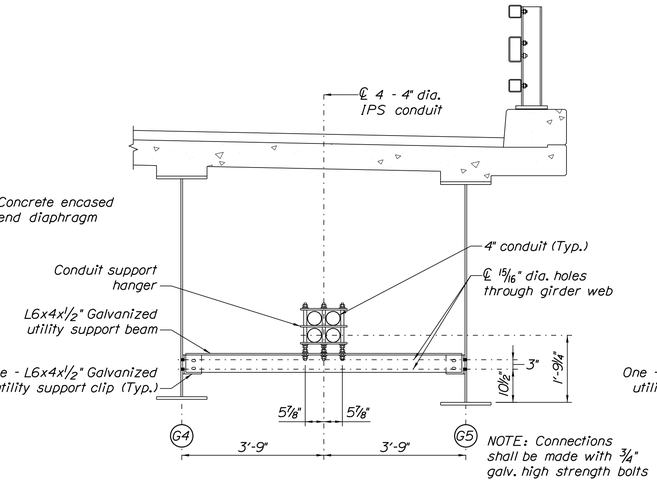

SECTION AT CONDUIT STANDARD SUPPORT

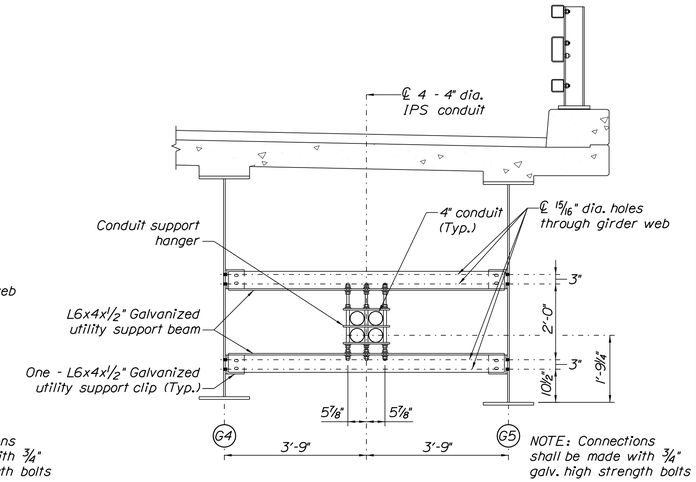

SECTION AT CONDUIT ANCHORED SUPPORT

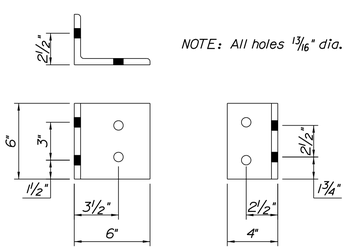

L6x4x½ GALVANIZED UTILITY SUPPORT CLIP

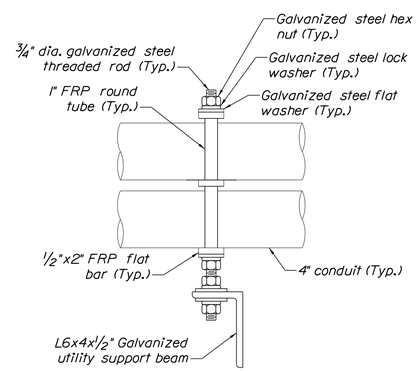

CONDUIT STANDARD SUPPORT HANGER

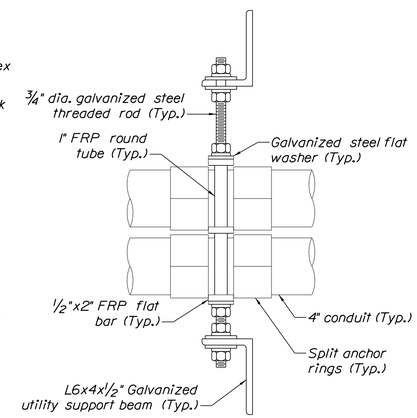

CONDUIT ANCHORED SUPPORT HANGER

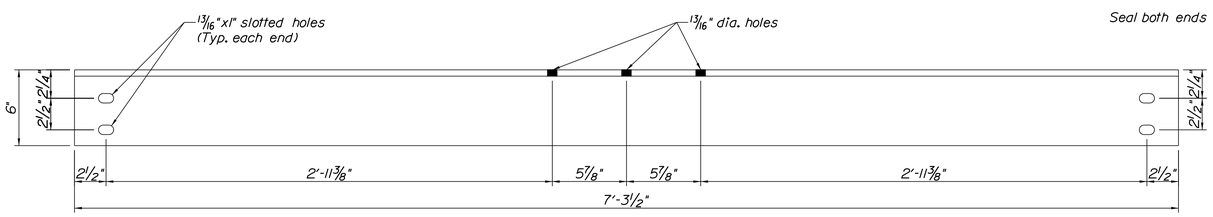

L6x4x½ GALVANIZED UTILITY SUPPORT BEAM

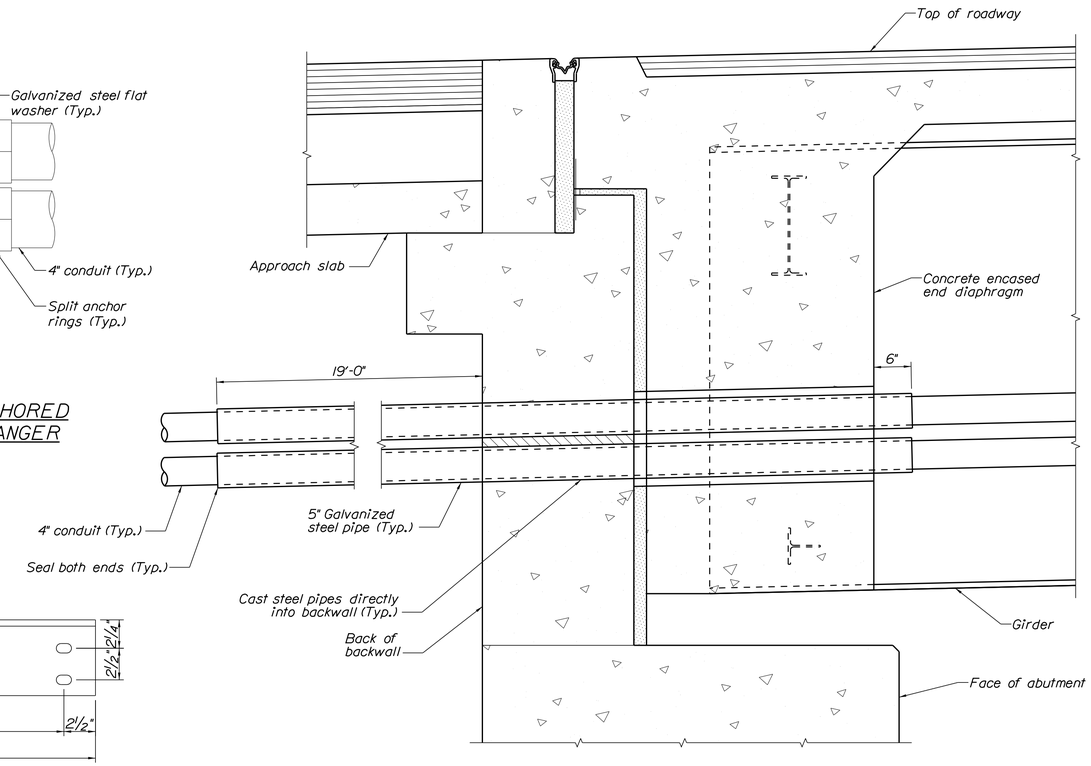

SECTION THROUGH ABUTMENT

TranSystems

STATE OF MAINE
DEPARTMENT OF TRANSPORTATION

BH-1510(500)X

WIN 15105.00

BRIDGE NO. 3248

BRIDGE PLANS

STATE OF MAINE
EVAN C. LOWELL
NO. 9065
LICENSED
PROFESSIONAL ENGINEER
6-17-13

PROJ. MANAGER	S. BODGE	BY	DATE
DESIGN-DETAILED	C. GAMACHE	C. GAMACHE	4/13
CHECKED-REVIEWED	E. LOWELL	T. STUOPIS	4/13
DESIGN2-DETAILED2			
DESIGN3-DETAILED3			
REVISIONS 1			
REVISIONS 2			
REVISIONS 3			
REVISIONS 4			
FIELD CHANGES			

SIGNATURE
9065
P.E. NUMBER
6/17/2013
DATE

MARTIN MEMORIAL BRIDGE
ANDROSCOGGIN RIVER
RUMFORD OXFORD COUNTY

CONDUIT SUPPORT DETAILS
SUPERSTRUCTURE DETAILS

SHEET NUMBER
90
OF 95

Filename: ...\090_Util Superstr Details.dgn Division: BRIDGE Username: T SANDELL Date:6/17/2013

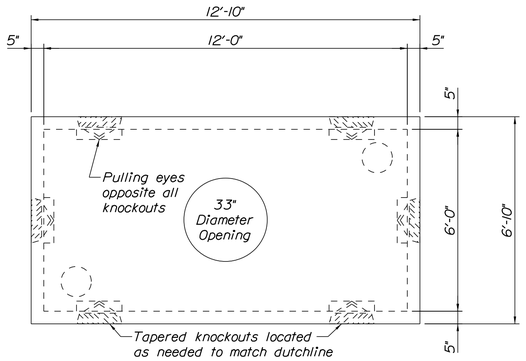

PLAN VIEW

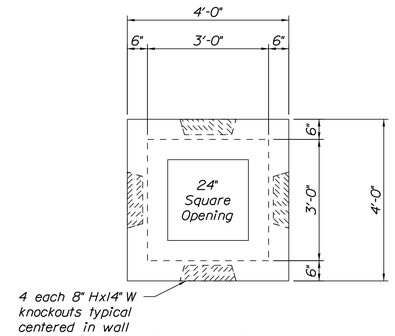

PLAN VIEW

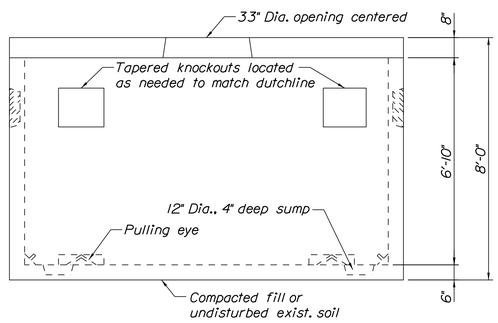

SIDE VIEW

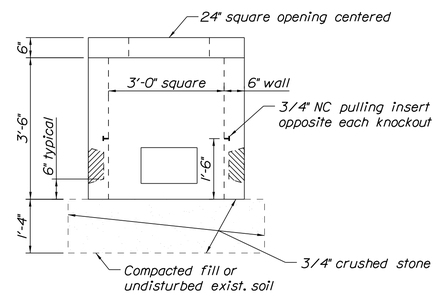

SIDE VIEW

NOTES

1. Vault shall be designed to withstand H20 wheel loading with 6 inches of overburden. The design shall also comply with the strength requirements of National Electrical Safety Code Section 323A. Provide shop drawings stamped by a State of Maine Licensed Professional Engineer upon request.

2. Joints sealed with asphalt.

3. Manhole shall be set on a suitable gravel base.

4. Cables are to be racked along one wall only.

TranSystems

STATE OF MAINE
DEPARTMENT OF TRANSPORTATION

BH-1510(500)X

WIN 15105.00

BRIDGE NO. 3248

BRIDGE PLANS

STATE OF MAINE EVAN C. LOWELL NO. 9065 PROFESSIONAL ENGINEER

6-17-13

PROJ. MANAGER	B. CONDON	BY	DATE
DESIGN-DETAILED	C. GAMACHE	C. GAMACHE	4/13
CHECKED-REVIEWED	E. LOWELL	T. STUOPIS	4/13
DESIGN2-DETAILED2			
DESIGN3-DETAILED3			
REVISIONS 1			
REVISIONS 2			
REVISIONS 3			
REVISIONS 4			
FIELD CHANGES			

SIGNATURE

9065
P.E. NUMBER

6/17/2013
DATE

MARTIN MEMORIAL BRIDGE
ANDROSCOGGIN RIVER
RUMFORD OXFORD COUNTY

UTILITY VAULT DETAILS

SHEET NUMBER

91

OF 95

Filename: ...\091_Util Vault Details.dgn Division: BRIDGE Username: T SANDELL Date:6/17/2013

Filename: ...\B012\0030\Road\092_RWPLAN1.dgn Division: BRIDGE Username: T SANDELL Date:6/17/2013

MCCRUM LAND, LLC
~~JAY Y. MCCRUM~~
~~DAVID B. MCCRUM~~
~~DARRELL E. MCCRUM~~
~~WADE S. MCCRUM~~
~~ROBERT W. LUNNEY~~
PARCEL NO. (2)
LAND TAKEN = 2.81± AC. (UPLAND)
LAND TAKEN = 0.45± AC. (SUBMERGED)
TOTAL LAND TAKEN = 3.26± AC.
SLOPE EASE. = 0.48± AC. (3)
DRAINAGE EASE. = 0.28± AC. (5)
TOTAL AREA = 64.0± AC. (PER TAX MAP)
REM. AREA = 58.18± AC. (UPLAND-CALC. LT.)
REM. AREA = 3.01± AC. (UPLAND-CALC. RT.)

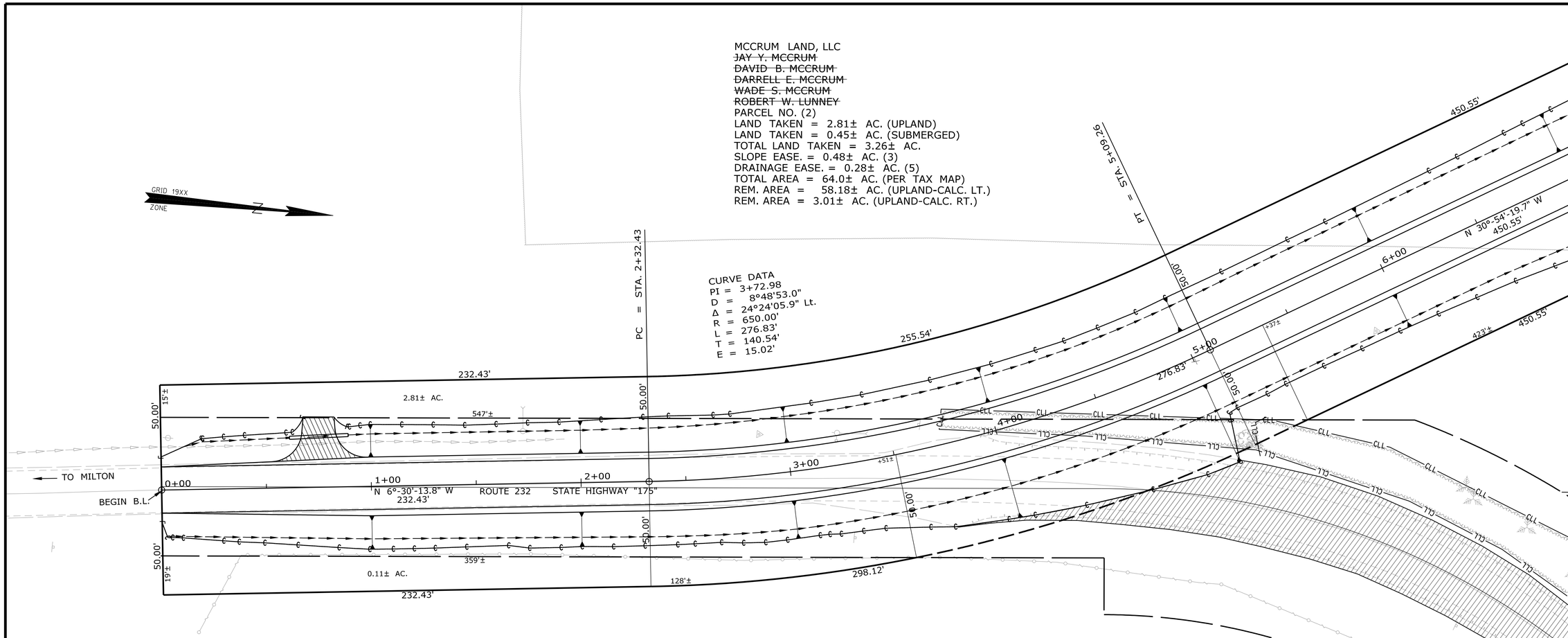

JAMES A. BENNETT
KATHLEEN M. BENNETT
PARCEL NO. (1)
LAND TAKEN = 0.11± AC.
TOTAL AREA = 11.34± AC. (PER TAX MAP)
REM. AREA = 11.23± AC.

EXISTING RIGHT OF WAY REFERENCES

OXFORD COUNTY
VOL. 1 PAGE 483
1830, 4 RODS WIDE

S.H.C. FILE NO. 9-86, SEPTEMBER 1954, SHEETS 1 & 2
S.H.C. FILE NO. 9-79, AUGUST 1954, SHEET 2

THIS PLAN WAS PREPARED IN CONNECTION WITH THE DEPARTMENT'S ACQUISITION OF REAL PROPERTY FOR TRANSPORTATION PURPOSES. IT CANNOT BE USED TO ESTABLISH LEGAL BOUNDARIES BETWEEN ABUTTING PROPERTY OWNERS.

SYMBOLS
- IP or IPF (IRON PIPE or PIN FOUND)
- S.T. (SEPTIC TANK)
- BM (ROW MONUMENT) (TRAVERSE POINT)
- WELL (WELL)
- GROUNDING ART LINE
- CONSTRUCTION LIMIT LINE
- PROPERTY LIMIT LINE
- LIMITS OF PROPERTY PORTION (L.O.V.P.)
- WATER LINE
- GAS LINE
- ELECTRIC LINE
- TELEPHONE LINE
- SEWER LINE
- NEW RIGHT OF WAY
- NEW ROW WITHIN EXIST. ROW
- CONTROL OF ACCESS

ITEM	TECH	CHECKED
BASE MAP		
EXIST. R/W	KLF-SEA	
PROP. LINES	KLF-SEA	PNS
AREAS		

STATE OF MAINE
DEPARTMENT OF TRANSPORTATION
16 STATE HOUSE STATION - AUGUSTA, ME 04333-0016
RUMFORD
RIGHT OF WAY MAP

BRIDGE NO. 3248 — MARTIN MEMORIAL BRIDGE OVER THE ANDROSCOGGIN RIVER — WIN 15105.00

REVISIONS

NO.	DATE	DESCRIPTION	BY
1	2/22/13	REVISED OWNER PARCEL 2	PNS

PLAN FILED IN PLAN BOOK PAGE COUNTY RECORD

NO.	GRANTOR	INSTRUMENT	DATE	BOOK	PAGE
		COND.	2/19/13	4954	289

DAVID BERNHARDT
COMMISSIONER
KENNETH L. SWEENEY
CHIEF ENGINEER
DATE

STATE OF MAINE — PETER A. BELANGER 1341 — PROFESSIONAL LAND SURVEYOR

STATE HIGHWAY "175"
ROUTE 232
RUMFORD OXFORD COUNTY
FEDERAL AID PROJECT NO. BH-1510(500)X

JUNE 2012 | RIGHT-OF-WAY MAP | D.O.T. FILE NO. 9-371
SCALE 1" = 25' | SHEET 1 OF 4

SHEET NUMBER
92
OF 95

EXISTING RIGHT OF WAY REFERENCES

OXFORD COUNTY
VOL. 1 PAGE 483
1830, 4 RODS WIDE

S.H.C. FILE NO. 9-86, SEPTEMBER 1954, SHEETS 1 & 2
S.H.C. FILE NO. 9-79, AUGUST 1954, SHEET 2

MCCRUM LAND, LLC
~~JAY Y. MCCRUM~~
~~DAVID B. MCCRUM~~
~~DARRELL E. MCCRUM~~
~~WADE S. MCCRUM~~
~~ROBERT W. LUNNEY~~
PARCEL NO. (2)
LAND TAKEN = 2.81± AC. (UPLAND)
LAND TAKEN = 0.45± AC. (SUBMERGED)
TOTAL LAND TAKEN = 3.26± AC.
SLOPE EASE. = 0.48± AC. (3)
DRAINAGE EASE. = 0.28± AC. (5)
TOTAL AREA = 64.0± AC. (PER TAX MAP)
REM. AREA = 58.18± AC. (UPLAND-CALC. LT.)
REM. AREA = 3.01± AC. (UPLAND-CALC. RT.)

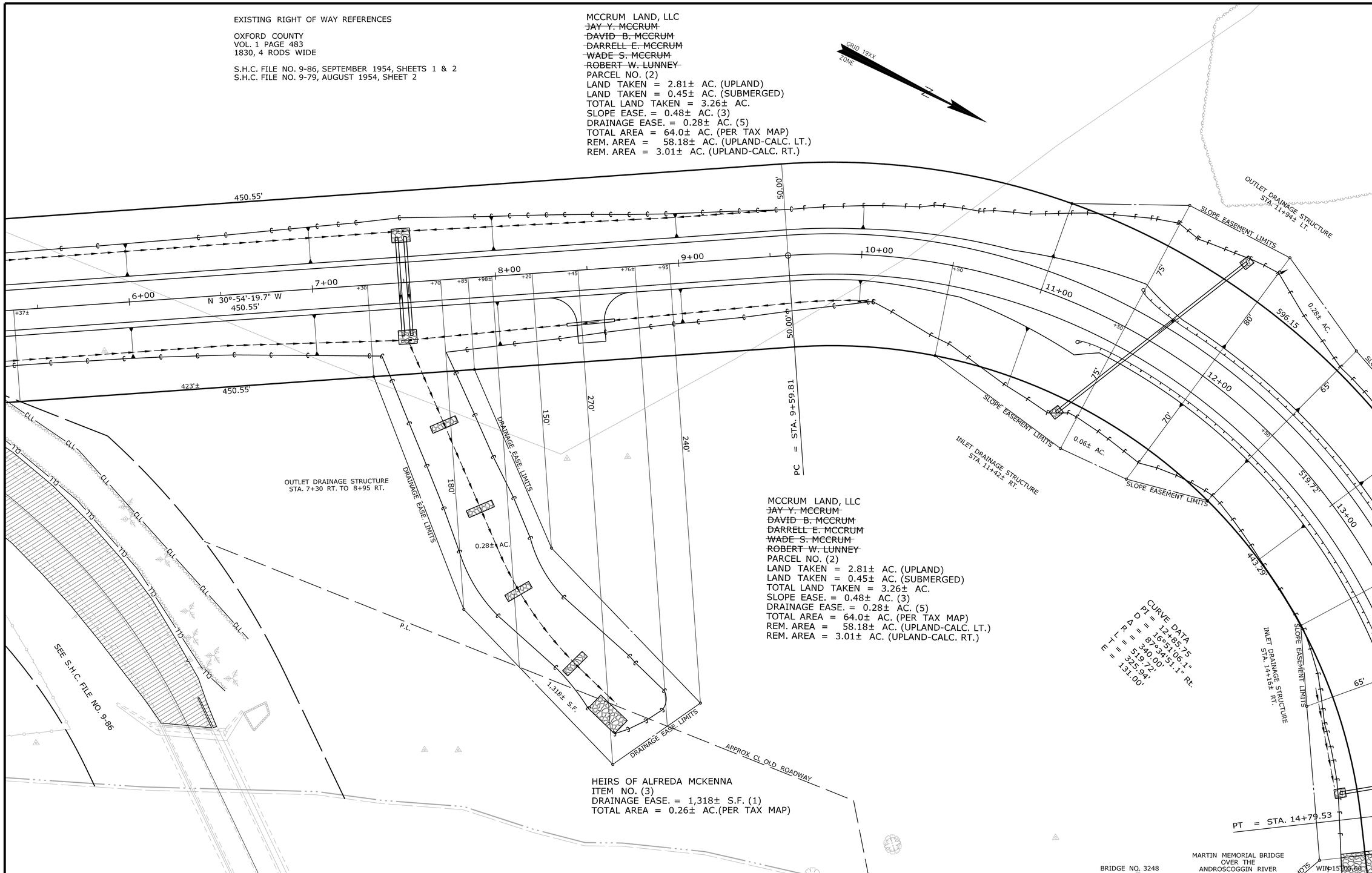

MCCRUM LAND, LLC
~~JAY Y. MCCRUM~~
~~DAVID B. MCCRUM~~
~~DARRELL E. MCCRUM~~
~~WADE S. MCCRUM~~
~~ROBERT W. LUNNEY~~
PARCEL NO. (2)
LAND TAKEN = 2.81± AC. (UPLAND)
LAND TAKEN = 0.45± AC. (SUBMERGED)
TOTAL LAND TAKEN = 3.26± AC.
SLOPE EASE. = 0.48± AC. (3)
DRAINAGE EASE. = 0.28± AC. (5)
TOTAL AREA = 64.0± AC. (PER TAX MAP)
REM. AREA = 58.18± AC. (UPLAND-CALC. LT.)
REM. AREA = 3.01± AC. (UPLAND-CALC. RT.)

HEIRS OF ALFREDA MCKENNA
ITEM NO. (3)
DRAINAGE EASE. = 1,318± S.F. (1)
TOTAL AREA = 0.26± AC.(PER TAX MAP)

THIS PLAN WAS PREPARED IN CONNECTION WITH THE DEPARTMENT'S ACQUISITION OF REAL PROPERTY FOR TRANSPORTATION PURPOSES. IT CANNOT BE USED TO ESTABLISH LEGAL BOUNDARIES BETWEEN ABUTTING PROPERTY OWNERS.

SYMBOLS
- IP or IPF (IRON PIPE or PIN FOUND)
- S.T. (SEPTIC TANK)
- (ROW MONUMENT)
- BM (TRAVERSE POINT)
- WELL
- GRADING LIMIT LINE
- CONSTRUCTION LIMIT LINE
- PROPERTY LINE
- LIMITS OF VEGETATION (L.O.V.P.)
- WATER LINE
- GAS LINE
- ELECTRIC LINE
- TELEPHONE LINE
- SEWER LINE
- NEW RIGHT OF WAY
- EXISTING RIGHT OF WAY
- NEW ROW WITHIN EXIST. ROW
- CONTROL OF ACCESS

ITEM	TECH	CHECKED
BASE MAP		
EXIST. R/W	KLF-SEA	
PROP. LINES	KLF-SEA	PNS
AREAS		

STATE OF MAINE
DEPARTMENT OF TRANSPORTATION
16 STATE HOUSE STATION - AUGUSTA, ME 04333-0016
RUMFORD
RIGHT OF WAY MAP

REVISIONS

NO.	DATE	DESCRIPTION	BY
1	2/22/13	REVISED OWNER PARCEL 2	PNS

PLAN FILED IN PLAN BOOK PAGE COUNTY RECORD

NO.	GRANTOR	INSTRUMENT	DATE	BOOK	PAGE
		COND.	2/19/13	4954	289

DAVID BERNHARDT
COMMISSIONER
KENNETH L. SWEENEY
CHIEF ENGINEER

DATE

STATE OF MAINE
PETER A. BELANGER 1341
PROFESSIONAL LAND SURVEYOR

STATE HIGHWAY "175"
ROUTE 232
RUMFORD OXFORD COUNTY
FEDERAL AID PROJECT NO. BH-1510(500)X

JUNE 2012 | RIGHT-OF-WAY MAP | D.O.T. FILE NO. 9-371
SCALE 1" = 25' | SHEET 2 OF 4

SHEET NUMBER
93
OF 95

Filename: ...\B012\0030\Road\093_RWPLAN2.dgn Division: BRIDGE Username: T SANDELL Date:6/17/2013

EXISTING RIGHT OF WAY REFERENCES

OXFORD COUNTY
VOL. 1 PAGE 483
1830, 4 RODS WIDE

S.H.C. FILE NO. 9-86, SEPTEMBER 1954, SHEETS 1 & 2
S.H.C. FILE NO. 9-79, AUGUST 1954, SHEET 2

MCCRUM LAND, LLC
~~JAY Y. MCCRUM~~
~~DAVID B. MCCRUM~~
~~DARRELL E. MCCRUM~~
~~WADE S. MCCRUM~~
~~ROBERT W. LUNNEY~~
PARCEL NO. (2)
LAND TAKEN = 2.81± AC. (UPLAND)
LAND TAKEN = 0.45± AC. (SUBMERGED)
TOTAL LAND TAKEN = 3.26± AC.
SLOPE EASE. = 0.48± AC. (3)
DRAINAGE EASE. = 0.28± AC. (5)
TOTAL AREA = 64.0± AC. (PER TAX MAP)
REM. AREA = 58.18± AC. (UPLAND-CALC. LT.)
REM. AREA = 3.01± AC. (UPLAND-CALC. RT.)

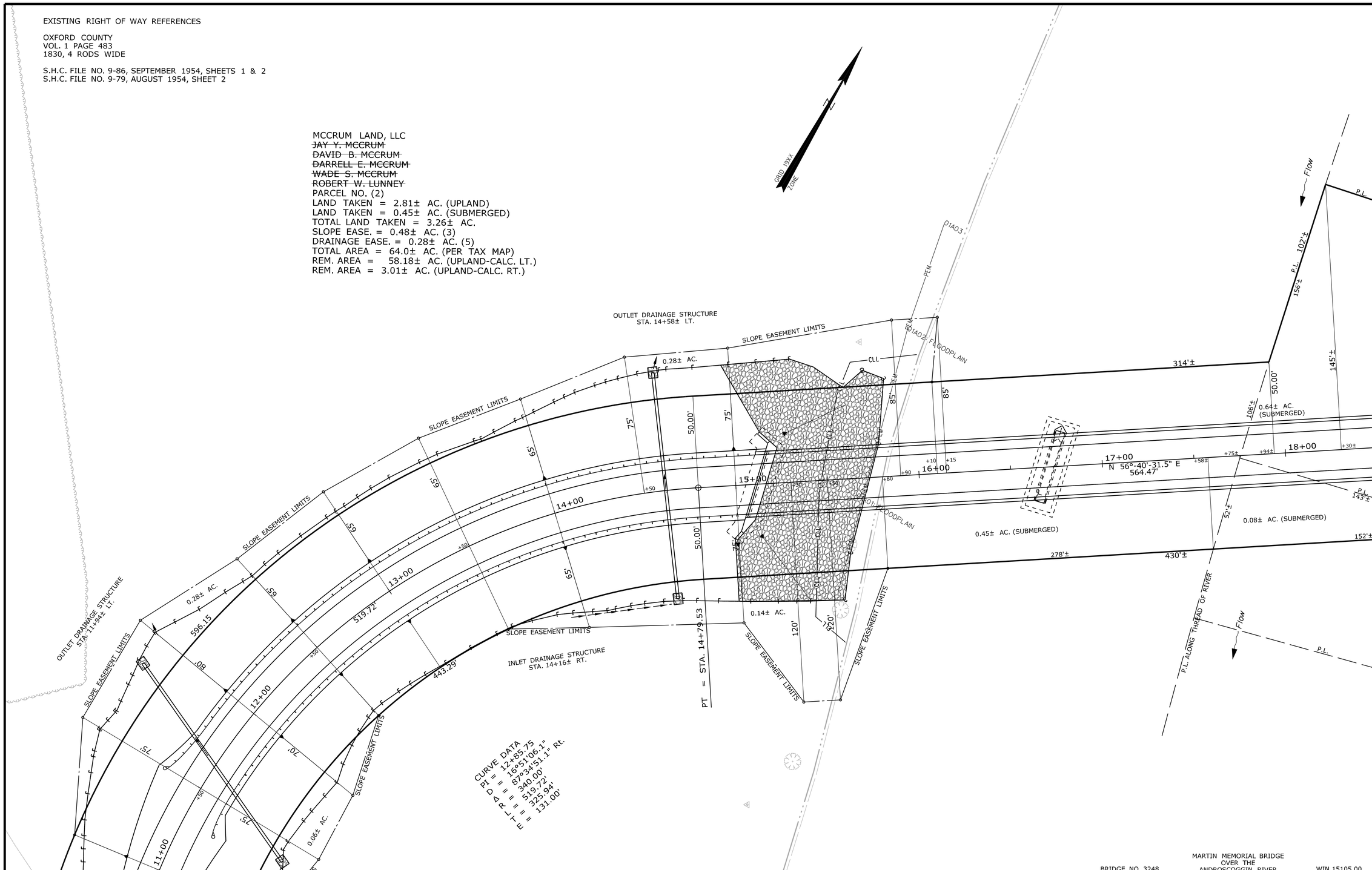

THIS PLAN WAS PREPARED IN CONNECTION WITH THE DEPARTMENT'S ACQUISITION OF REAL PROPERTY FOR TRANSPORTATION PURPOSES. IT CANNOT BE USED TO ESTABLISH LEGAL BOUNDARIES BETWEEN ABUTTING PROPERTY OWNERS.

SYMBOLS
- IP or IPF (IRON PIPE or PIN FOUND)
- S.T. (SEPTIC TANK)
- (ROW MONUMENT)
- (TRAVERSE POINT)
- (WELL)
- GRADING LIMIT LINE
- CONSTRUCTION LIMIT LINE
- PROPERTY LINE
- LIMITS OF VARIOUS RIGHTS (LOVR.P.)
- WATER LINE
- GAS LINE
- ELECTRIC LINE
- TELEPHONE LINE
- SEWER LINE
- EXISTING RIGHT OF WAY
- NEW RIGHT OF WAY
- NEW ROW WITHIN EXIST. ROW
- CONTROL OF ACCESS

ITEM	TECH	CHECKED
BASE MAP		
EXIST. R/W	KLF-SEA	
PROP. LINES	KLF-SEA	PNS
AREAS		

STATE OF MAINE
DEPARTMENT OF TRANSPORTATION
16 STATE HOUSE STATION - AUGUSTA, ME 04333-0016
RUMFORD
RIGHT OF WAY MAP

BRIDGE NO. 3248 — MARTIN MEMORIAL BRIDGE OVER THE ANDROSCOGGIN RIVER — WIN 15105.00

REVISIONS

NO.	DATE	DESCRIPTION	BY
1	2/22/13	REVISED OWNER PARCEL 2	PNS

PLAN FILED IN PLAN BOOK PAGE COUNTY RECORD

NO.	GRANTOR	INSTRUMENT	DATE	BOOK	PAGE
		COND.	2/19/13	4954	289

DAVID BERNHARDT
COMMISSIONER
KENNETH L. SWEENEY
CHIEF ENGINEER
DATE

STATE OF MAINE — PETER A. BELANGER 1341 — PROFESSIONAL LAND SURVEYOR

STATE HIGHWAY "175"
ROUTE 232
RUMFORD OXFORD COUNTY
FEDERAL AID PROJECT NO. BH-1510(500)X

JUNE 2012 | RIGHT-OF-WAY MAP | D.O.T. FILE NO. 9-371
SCALE 1" = 25' | SHEET 3 OF 4

SHEET NUMBER
94
OF 95

Filename: ...\B012\0030\Road\094_RWPLAN3.dgn Division: BRIDGE Username: T SANDELL Date:6/17/2013

EXISTING RIGHT OF WAY REFERENCES

OXFORD COUNTY
VOL. 1 PAGE 483
1830, 4 RODS WIDE

S.H.C. FILE NO. 9-86, SEPTEMBER 1954, SHEETS 1 & 2
S.H.C. FILE NO. 9-79, AUGUST 1954, SHEET 2

CURVE DATA
PI = 53+33.53
D = 11°30'26.1"
Δ = 67°38'00.0" Lt.
R = 497.91'
L = 587.75'
T = 333.53'
E = 101.39'

JAMES R. KNIGHT
NANCY KNIGHT

ITEM NO. (8) OMITTED

BENJAMIN R. BYAM
SAMANTHA R. BYAM

ITEM NO. (9) OMITTED

LINCOLN DAVIS III

ITEM NO. (10) OMITTED

N/F JEROME STABILE

N/F JASON PERREAULT
AMY JORDAN

N/F ANDREA LANE

U.S. ROUTE 2
STATE HIGHWAY "25"
BEGIN B.L. 50+00
PC = STA. 50+00.00

RIGHT OF WAY TO OTHERS = STA. 55+87.25

SEE 4.5' WIDE SIDEWALK EASEMENT TO TOWN OF RUMFORD OCRD BK 544, PG 425

SEE 4.5' WIDE SIDEWALK EASEMENT TO TOWN OF RUMFORD OCRD BK 544, PG 426

Old Route 232 STA. 30+00.00 = U.S. Route 2 STA. 55+09.99

56+00
U.S. ROUTE 2
STATE HIGHWAY "25"
S 75°-53'-01.9" E
112.25'
END B.L.
STA. 57+00

DONAT C. PARENT
PARCEL NO. (4)
LAND TAKEN = 337± S.F.
TEMP. CONST. RIGHTS = 1,831± S.F. (1)
BUILDINGS = 1
TOTAL AREA = 0.38± AC. (PER TAX MAP)
REM. AREA = 0.39± AC.

NOTE: RIGHTS TAKEN TO RAZE AND REMOVE THAT PORTION OF THE BUILDING THAT LIES OUTSIDE OF THE NEW BOUNDARIES OF STATE HIGHWAY "25" AT ABOUT STA. 51+00 RT.

HOUSE
GARAGE
1,631± S.F.
TEMP. CONST. LIMITS

51+00
52+00
53+00
54+00
55+00
30+00
81.45'
225.55'
587.75'
328'± TOTAL
131'±
N 61°-40'-31.5" E
28.97'
30.55'
L.O.W.P.
STA. 20+74.55
STA. 20+44.00
PC
162'±
0.36± AC.
788± S.F.
RL 80'±
52± S.F.
80'± 284± S.F.
32'± S.F.
79'±
TEMP. CONST. LIMITS
645± S.F.
TEMP. CONST. LIMITS
210± S.F.
TEMP. CONST. LIMITS

CURVE DATA
PI = 20+59.28
D = 16°22'12.8"
Δ = 50°00'00.0"
R = 350.00'
L = 30.55'
T = 15.28'
E = 0.33'

WESLEY E. CARR, III
ITEM NO. (11)
TEMP. CONST. RIGHTS = 210± S.F. (1)
TOTAL AREA = 2.63± AC. (PER TAX MAP)

RAYMOND WILSON
PARCEL NO. (5)
LAND TAKEN = 0.36± AC. (UPLAND)
LAND TAKEN = 0.64± AC. (SUBMERGED)
TOTAL LAND TAKEN = 1.0± AC.
(ENTIRE LOT)
BUILDINGS = 2

0.64± AC. (SUBMERGED)
248'±
N 56°-40'-31.5" E
564.47'
19+00
50.00'
63'±
37'±
80'±
268'±
440'±
127'±
(164'±)
Route 232 STA. 21+00.52 = U.S. Route 2 STA. 51+74.45
01C02: FLOODPLAIN-100 YEAR
01B02: FLOODPLAIN-100 YEAR
01C01: FLOODPLAIN-100 YEAR
180'±
0.08± AC. (SUBMERGED)
143'±
152'±
145'±
156'±
102'±
FLOW

DOROTHY DUNTON
PARCEL NO. (7)
LAND TAKEN = 254± S.F.
TEMP. CONST. RIGHTS = 966± S.F. (2)
TOTAL AREA = 0.24± AC. (PER TAX MAP)
REM. AREA = 0.23± AC.

OSCAR E. BERNARD
PARCEL NO. (6)
LAND TAKEN = 788± S.F. (UPLAND)
LAND TAKEN = 0.08± AC. (SUBMERGED)
TOTAL LAND TAKEN = 0.10± AC.
TEMP. CONST. RIGHTS = 52± S.F. (1)
TOTAL AREA = 0.26± AC. UPLAND (PER TAX MAP)
TOTAL AREA = 0.36± AC. SUBMERGED (MEAS.)
REM. AREA = 0.24± AC. (UPLAND)
REM. AREA = 0.28± AC. (SUBMERGED)

N/F WILLIAM DUNTON
MARY DUNTON

PC = STA. 31+43.13
PT = STA. 31+74.28

31+00
32+00

N/F RUMFORD POINT CONGREGATIONAL CHURCH

SEE S.H.C. FILE NO. 9-86

POE = STA. 32+15.28

MARTIN MEMORIAL BRIDGE
OVER THE
ANDROSCOGGIN RIVER
BRIDGE NO. 5248
WIN 15105.00

P.L.
CLL
TID

THIS PLAN WAS PREPARED IN CONNECTION WITH THE DEPARTMENT'S ACQUISITION OF REAL PROPERTY FOR TRANSPORTATION PURPOSES. IT CANNOT BE USED TO ESTABLISH LEGAL BOUNDARIES BETWEEN ABUTTING PROPERTY OWNERS.

SYMBOLS
IP or IPF (IRON PIPE or PIN FOUND)
S.T. (SEPTIC TANK)
BM (ROW MONUMENT) (TRAVERSE POINT)
WELL
GRADING LIMIT LINE
CONSTRUCTION LIMIT LINE
PROPERTY LINE
LIMITS OF ACQUISITION (L.O.W.P.)
WATER LINE
GAS LINE
ELECTRIC LINE
TELEPHONE LINE
SEWER LINE
NEW RIGHT OF WAY
EXISTING RIGHT OF WAY
NEW ROW WITHIN EXIST. ROW
CONTROL OF ACCESS

ITEM	TECH	CHECKED
BASE MAP		
EXIST. R/W	KLF-SEA	
PROP. LINES	KLF-SEA	PNS
AREAS		

STATE OF MAINE
DEPARTMENT OF TRANSPORTATION
16 STATE HOUSE STATION - AUGUSTA, ME 04333-0016
RUMFORD
RIGHT OF WAY MAP

REVISIONS

NO.	DATE	DESCRIPTION	BY

PLAN FILED IN PLAN BOOK PAGE COUNTY RECORD

NO.	GRANTOR	INSTRUMENT	DATE	BOOK	PAGE
		COND.	2/19/13	4954	289

DAVID BERNHARDT
COMMISSIONER
KENNETH L. SWEENEY
CHIEF ENGINEER

DATE

STATE OF MAINE
PETER A. BELANGER 1341
PROFESSIONAL LAND SURVEYOR

STATE HIGHWAY "175"
ROUTE 232
RUMFORD OXFORD COUNTY
FEDERAL AID PROJECT NO. BH-1510(500)X

JUNE 2012 | RIGHT-OF-WAY MAP | D.O.T. FILE NO. 9-371
SCALE 1" = 25' | SHEET 4 OF 4

SHEET NUMBER
95
OF 95

Filename: ...\B012\0030\Road\095_RWPLAN4.dgn Division: BRIDGE Username: T SANDELL Date:6/17/2013