STATE OF MAINE
DEPARTMENT OF TRANSPORTATION

SPECIFICATIONS

Design: Load and Resistance Factor Design per AASHTO LRFD Bridge Design Specifications, Sixth Edition 2012.

DESIGN LOADING

Live Load ..... HL - 93 Modified

TRAFFIC DATA

Current (2012) AADT	2720
Future (2032) AADT	4010
DHV - % of AADT	14
Design Hour Volume	561
Heavy Trucks (% of AADT)	5
Heavy Trucks (% of DHV)	5
Directional Distribution (% of DHV)	55
18 kip Equivalent P 2.0	41
18 kip Equivalent P 2.5	39
Design Speed (mph)	35

HYDROLOGIC DATA

Drainage Area	5841 sq mi
Design Discharge (Q50)	210,703 cfs
Check Discharge (Q100)	233,000 cfs
Headwater Elevation (Q50)	11.34 ft
Headwater Elevation (Q100)	12.80 ft
Discharge Velocity (Q50)	6.71 fps
Discharge Velocity (Q100)	7.04 fps
Headwater Elevation (Q1.1)	5.88 ft
Discharge Velocity (Q1.1)	3.70 fps
Headwater Elevation (Q25)	9.76 ft
Mean Lower Low Water (MLLW)	-1.87 ft
Mean Low Water (MLW)	-1.69 ft
Mean Tide Level (MTL)	0.95 ft
Mean High Water (MHW)	3.60 ft
Mean Higher High Water (MHHW)	3.92 ft
Clearance (Q50)	67.3 ft
Clearance (Q100)	65.8 ft

MATERIALS

Concrete:	
Curbs & Transition Barriers	Class "LP"
Seals	Class "S"
Fill	"Fill"
All Other	Class "A"
Reinforcing Steel	ASTM A 615/A 615M, Grade 60
Structural Steel:	
Webs and Flanges at Piers	ASTM A 709, Grade HPS 70W
All Other Material (unless noted)	ASTM A 709, Grade 50W
High Strength Bolts	ASTM A 325, Type 3

BASIC DESIGN STRESSES

Concrete:	
Class "LP"	f 'c = 5,000 psi
Class "S"	f 'c = 2,900 psi
Class"A"	f 'c = 4,350 psi
Reinforcing Steel	f y = 60,000 psi
Structural Steel:	
ASTM A 709, Grade HPS 70W	F y = 70,000 psi
ASTM A 709, Grade 50W	F y = 50,000 psi
ASTM A 325	F μ = 120,000 psi

RICHMOND, SAGADAHOC CTY.
DRESDEN, LINCOLN CTY.
MAINE KENNEBEC BRIDGE
OVER
KENNEBEC RIVER
STATE ROUTE 197
FEDERAL AID PROJECT NO. AC-BH-1267(400)
PROJECT LENGTH 0.549 mi.
BRIDGE NO. 2506

LIST OF DRAWINGS

Title Sheet	1
Estimated Quantities	2
General Construction Notes	3
General Plan	4 - 8
Profile: Route 197	9 - 13
Profile: Fort Richmond Park	14
Profile: Lincoln Road	15
Profile: Water District Road	16
Typical Approach Sections	17
Typical Bridge Sections	18
Boring Location Plan (Approaches)	19
Boring Logs (Approaches)	20 - 22
Boring Location Plan (Bridge)	23 - 25
Interpretive Subsurface Profile (Bridge)	26 - 28
Boring Logs (Bridge)	29 - 32
Cross Sections: Route 197 (Richmond)	33 - 46
Cross Sections: Route 197 (Dresden)	47 - 66
Cross Sections: Entrance at Sta. 106+00	67 - 69
Cross Sections: Fort Richmond Park	70 - 74
Cross Sections: Lincoln Road	75 - 84
Cross Sections: Water District Road	85 - 86
General Bridge Plan	87
Abutment Notes	88
Abutment No. 1	89 - 97
Abutment No. 2	98 - 105
Pier Notes	106
Pier No. 1	107 - 111
Pier No. 2	112 - 116
Pier No. 3	117 - 121
Pier No. 4	122 - 129
Pier No. 5	130 - 134
Pier No. 6	135 - 139
Bearings	140 - 142
Structural Steel	143 - 159
Superstructure Slab	160 - 182
Utility Manhole Details	183
Bridge Drains	184
Expansion Devices	185 - 191
Concrete Transition Barriers	192 - 195
Reinforcing Steel Schedule	196 - 204
Recreational Facilities	205 - 208
Right of Way Map	209 - 214
Utility Plans	215 - 238

UTILITIES

Central Maine Power Company
Fairpoint Communications
Time Warner Cable
Richmond Utilities District

MAINTENANCE OF TRAFFIC

Maintain two lanes of traffic on the existing bridge during construction, and a minimum of one way alternating traffic on each approach.

PROJECT LOCATION:	On the Richmond and Dresden town line, on State Route 197 over the Kennebec River. Lat./Long. 44°05'26.5" N 69°46'58.4" W
PROGRAM AREA:	Highway Bridges - Extraordinary
OUTLINE OF WORK:	Bridge replacement with 1500 feet of approach work and improved public access at historic Fort Richmond site.

STATE OF MAINE
DEPARTMENT OF TRANSPORTATION
APPROVED — DATE
COMMISSIONER: 3/25/13
CHIEF ENGINEER: 3-25-13

STATE OF MAINE — Nathaniel D. Benoit — 10651 — LICENSED PROFESSIONAL ENGINEER

SIGNATURE: Nate Benoit
P.E. NUMBER: 10651
DATE: 3-21-13

PROJECT INFORMATION

PROGRAM	BRIDGE PROGRAM
PROJECT MANAGER	NATHANIEL BENOIT
DESIGNER	EDWARD CASWELL
CONSULTANT	N/A
PROJECT RESIDENT	PETER BROWN
CONTRACTOR	
PROJECT COMPLETION DATE	

WIN 12674.00

AC-BH-1267(400)

RICHMOND / DRESDEN
MAINE KENNEBEC BRIDGE

TITLE SHEET

SHEET NUMBER
1
OF 238

Filename:\00\BRIDGE\MSTA\001_Title.dgn Division: BRIDGE Username: dana.damren Date:3/21/2013

ESTIMATED QUANTITIES

ITEM NO.	DESCRIPTION	QUANTITY	UNIT
201.11	CLEARING	2	AC
201.23	REMOVING SINGLE TREE TOP ONLY	12	EA
201.24	REMOVING STUMP	12	EA
202.08	REMOVING BUILDING NO. 1	1	LS
202.08	REMOVING BUILDING NO. 2	1	LS
202.19	REMOVING EXISTING BRIDGE (4380 CY; 468 T)	1	LS
202.20	REMOVING BITUMINOUS CONCRETE PAVEMENT	2760	SY
203.20	COMMON EXCAVATION	5900	CY
203.24	COMMON BORROW	45,500	CY
203.25	GRANULAR BORROW	3500	CY
206.082	STRUCTURAL EARTH EXCAVATION - MAJOR STRUCTURES	130	CY
206.092	STRUCTURAL ROCK EXCAVATION - MAJOR STRUCTURES	112	CY
206.10	STRUCTURAL EARTH EXCAVATION - PIERS	3600	CY
206.11	STRUCTURAL ROCK EXCAVATION - PIERS	82	CY
304.10	AGGREGATE SUBBASE COURSE - GRAVEL	6600	CY
403.209	HOT MIX ASPHALT 9.5 MM HMA (SIDEWALKS, DRIVES, INC.)	111	T
403.2101	9.5 MM POLYMER MODIFIED HMA	1552	T
403.213	HOT MIX ASPHALT 12.5 MM BASE	1139	T
409.15	BITUMINOUS TACK COAT - APPLIED	500	G
501.231	DYNAMIC LOADING TEST	8	EA
501.235	ACOUSTIC MONITOR	70	CD
501.50	STEEL H-BEAM PILES 89 LBS/FT. DELIVERED	500	LF
501.501	STEEL H-BEAM PILES 89 LBS/FT. IN PLACE	500	LF
501.54	STEEL H-BEAM PILES 117 LBS/FT. DELIVERED	2200	LF
501.541	STEEL H-BEAM PILES 117 LBS/FT. IN PLACE	2200	LF
501.90	PILE TIPS	61	EA
501.91	PILE SPLICES	103	EA
501.92	PILE DRIVING EQUIPMENT MOBILIZATION	1	LS
501.921	PILE DRIVING EQUIPMENT MOBILIZATION - PIERS	1	LS
502.21	STRUC. CONC. ABUTMENTS AND RETAINING WALLS	116	CY
502.219	STRUC. CONC. ABUTMENTS AND RETAINING WALLS (423 CY)	1	LS
502.239	STRUC. CONC. PIERS (3114 CY)	1	LS
502.24	STRUC. CONC. PIERS (PLACED UNDER WATER)	2975	CY
502.249	STRUC. CONC. PIERS (PLACED UNDER WATER) (1141 CY)	1	LS
502.26	STRUC. CONC. RDWY. AND SDWK. SLABS ON STL. BR. (1567 CY)	1	LS
502.31	STRUC. CONC. APPROACH SLABS (24 CY)	1	LS
502.49	STRUC. CONC. CURBS AND SIDEWALKS (179 CY)	1	LS
502.56	CONCRETE FILL	40	CY
502.703	FRP DOWNSPOUT	3	EA
502.72	FRP BRIDGE DRAIN - TYPE "A"	36	EA
503.12	REINFORCING STEEL, FABRICATED AND DELIVERED	638,500	LB
503.13	REINFORCING STEEL, PLACING	638,500	LB
503.17	MECHANICAL WELDED SPLICE	546	EA
503.30	CORROSION RESISTANT REINF. SYSTEM, FAB. & DEL.	26,200	LB
503.31	CORROSION RESISTANT REINF. SYSTEM, PLACING	26,200	LB
504.702	STRUCTURAL STEEL FAB. AND DEL., WELDED (2,253,000 LB)	1	LS
504.71	STRUCTURAL STEEL ERECTION (2,253,000 LB)	1	LS
505.08	SHEAR CONNECTORS (11,568 EA)	1	LS
507.0836	MAINE SCENIC BRIDGE RAILING, 3 BAR (2960 LF)	1	LS
508.14	HIGH PERF. WATERPROOFING MEMBRANE (5280 SY)	1	LS
511.07	COFFERDAM: PIER NO. 1	1	LS
511.07	COFFERDAM: PIER NO. 2	1	LS
511.07	COFFERDAM: PIER NO. 3	1	LS
511.07	COFFERDAM: PIER NO. 4	1	LS
511.07	COFFERDAM: PIER NO. 5	1	LS
511.07	COFFERDAM: PIER NO. 6	1	LS
512.08	FRENCH DRAINS	950	LF
512.081	FRENCH DRAINS (122 LF)	1	LS
515.21	PROTECTIVE COATING FOR CONC. SURFACES (1485 SY)	1	LS
521.23	EXPANSION DEVICE FINGER JOINT: PIER NO. 1	1	EA
521.23	EXPANSION DEVICE FINGER JOINT: ABUT. NO. 2	1	EA
523.52	BEARING INSTALLATION	36	EA
523.5401	LAMINATED ELASTOMERIC BEARINGS, FIXED	4	EA
523.5402	LAMINATED ELASTOMERIC BEARINGS, EXPANSION	4	EA
523.5551	POT OR DISC BEARINGS, FIXED	12	EA
523.5552	POT OR DISC BEARINGS, EXPANSION	16	EA

ESTIMATED QUANTITIES

ITEM NO.	DESCRIPTION	QUANTITY	UNIT
526.301	TEMPORARY CONCRETE BARRIER TYPE 1 (500 LF)	1	LS
526.34	PERMANENT CONCRETE TRANSITION BARRIER	2	EA
526.3401	PERMANENT CONCRETE TRANSITION BARRIER - MODIFIED	2	EA
527.303	ENERGY ABSORBING SYSTEM (ET-PLUS)	3	EA
603.17	18 INCH CULVERT PIPE OPTION I	176	LF
603.189	21 INCH CULVERT PIPE OPTION III	122	LF
603.19	24 INCH CULVERT PIPE OPTION I	18	LF
603.199	24 INCH CULVERT PIPE OPTION III	174	LF
605.09	6 INCH UNDERDRAIN TYPE B	460	LF
605.10	6 INCH UNDERDRAIN OUTLET	70	LF
606.1721	BRIDGE TRANSITION - TYPE 1	4	EA
606.23	GUARDRAIL TYPE 3C - SINGLE RAIL	913	LF
606.231	GUARDRAIL TYPE 3C - 15 FOOT RADIUS AND LESS	25	LF
606.232	GUARDRAIL TYPE 3C - OVER 15 FOOT RADIUS	100	LF
606.265	TERMINAL END - SINGLE RAIL - GALVANIZED STEEL	1	EA
606.353	REFLECTORIZED FLEXIBLE GUARDRAIL MARKER	12	EA
606.356	UNDERDRAIN DELINEATOR POST	1	EA
606.47	SINGLE WOOD POST	6	EA
606.79	GUARDRAIL 350 FLARED TERMINAL	2	EA
609.31	CURB TYPE 3	45	LF
610.08	PLAIN RIPRAP	1900	CY
610.18	STONE DITCH PROTECTION	530	CY
610.60	BARRIER BOULDERS	30	EA
613.319	EROSION CONTROL BLANKET	500	SY
615.07	LOAM	900	CY
618.1301	SEEDING METHOD NUMBER 1 - PLAN QUANTITY	26	UN
618.1401	SEEDING METHOD NUMBER 2 - PLAN QUANTITY	106	UN
618.143	SPECIAL SEED MIX	31	UN
619.1201	MULCH - PLAN QUANTITY	146	UN
619.1401	EROSION CONTROL MIX	1900	CY
620.58	EROSION CONTROL GEOTEXTILE	2600	SY
621.032	EVERGREEN TREES (4 FOOT - 5 FOOT) GROUP B	12	EA
621.043	EVERGREEN TREES (6 FOOT - 8 FOOT) GROUP A	18	EA
621.044	EVERGREEN TREES (6 FOOT - 8 FOOT) GROUP B	6	EA
621.047	EVERGREEN TREES (8 FOOT - 9 FOOT) GROUP B	6	EA
621.101	PLUG/ STARTER PLANT	500	EA
621.178	MED. DECIDUOUS TREES (6 FOOT - 8 FOOT) GROUP A	6	EA
621.273	LG. DECIDUOUS TREE (2 INCH - 2.50 INCH CALIPER) GRP. A	9	EA
621.275	LG. DECIDUOUS TREE (2 INCH - 2.50 INCH CALIPER) GRP. C	3	EA
621.531	DECIDUOUS SHRUBS (12"-18"CAL.) GROUP A	36	EA
621.54	DECIDUOUS SHRUBS (18 INCH - 24 INCH) GROUP A	36	EA
621.541	DECIDUOUS SHRUBS (18 INCH - 24 INCH) GROUP B	84	EA
621.542	DECIDUOUS SHRUBS (18 INCH - 24 INCH) GROUP C	24	EA
621.558	DECIDUOUS SHRUBS (4 FOOT - 5 FOOT) GROUP A	12	EA
621.80	ESTABLISHMENT PERIOD	1	LS
627.733	4 INCH WHITE OR YELLOW PAINTED PAVEMENT MRK. LINE	9150	LF
629.05	HAND LABOR, STRAIGHT TIME	160	HR
631.12	ALL PURPOSE EXCAVATOR (INCLUDING OPERATOR)	100	HR
631.13	BULLDOZER (INCLUDING OPERATOR)	100	HR
631.171	TRUCK - SMALL (INCLUDING OPERATOR)	100	HR
631.172	TRUCK - LARGE (INCLUDING OPERATOR)	100	HR
631.22	FRONT END LOADER (INCLUDING OPERATOR)	100	HR
637.071	DUST CONTROL	1	LS
638.02	NAVIGATION LIGHTS	1	LS
639.18	FIELD OFFICE, TYPE A	1	EA
641.103	WOODEN PICNIC TABLE, RECTANGULAR 8 FT.	3	EA
641.89	KIOSK	1	EA
641.93	PICNIC SHELTER	3	EA
645.51	SPECIAL SIGNING	2	EA

ESTIMATED QUANTITIES

ITEM NO.	DESCRIPTION	QUANTITY	UNIT
652.312	TYPE III BARRICADE	10	EA
652.33	DRUM	50	EA
652.34	CONE	60	EA
652.35	CONSTRUCTION SIGNS	300	SF
652.361	MAINTENANCE OF TRAFFIC CONTROL DEVICES (930 CD)	1	LS
652.38	FLAGGER	2000	HR
656.75	TEMPORARY SOIL EROSION AND WATER POLLUTION CONTROL	1	LS
659.10	MOBILIZATION	1	LS
660.21	ON-THE-JOB TRAINING (BID)	6000	HR
853.10	BOAT	1	LS
890.01	SPECIAL WORK #1	1	LS

ESTIMATED QUANTITIES (WIN 12674.10)

ITEM NO.	DESCRIPTION	QUANTITY	UNIT
501.55	DRIVING AND TESTING FRP COMPOSITE PILES	1	LS

STATE OF MAINE
DEPARTMENT OF TRANSPORTATION

AC-BH-1267(400)

WIN 12674.00

BRIDGE NO. 2506

BRIDGE PLANS

PROJ. MANAGER	N. Benoit	BY	DATE
DESIGN-DETAILED	Team South	D. Damren	April 2013
CHECKED-REVIEWED	Team South	------	------
DESIGN2-DETAILED2	------	------	------
DESIGN3-DETAILED3	------	------	------
REVISIONS 1	------	------	------
REVISIONS 2	------	------	------
REVISIONS 3	------	------	------
REVISIONS 4	------	------	------
FIELD CHANGES	------	------	------

SIGNATURE

P.E. NUMBER

DATE

MAINE KENNEBEC BRIDGE
KENNEBEC RIVER
RICHMOND, SAGADAHOC CTY. DRESDEN, LINCOLN CTY.

ESTIMATED QUANTITIES

SHEET NUMBER

2

OF 238

Filename: ...\BRIDGE\MSTA\002_Estimate.dgn Division: BRIDGE Username: dona.damren Date:4/9/2013

GENERAL CONSTRUCTION NOTES

1. For easements, construction limits and right of way lines, refer to Right of Way Map.

2. The clearing limits as shown on the plans are approximate. The actual clearing limits for payment will be established in the field by the Resident.

3. All utility facilities shall be adjusted by the respective utilities unless otherwise noted.

4. Do not excavate for Aggregate Subbase Course where existing material is suitable as determined by the Resident.

5. In areas where the Resident directs the Contractor not to excavate to the subgrade line shown on the plans, payment for removing existing pavement, grubbing, shaping, ditching, and compacting the existing subbase and layers of new subbase 6 inches or less thick will be made under appropriate equipment rental items.

6. All existing pavement within the project limits shall be removed unless otherwise directed by the Resident. Payment for existing pavement removal within the limits of excavation will be considered incidental to the appropriate Contract items. Existing pavement removal outside the limits of excavation will be paid for under Item No. 202.20, Removing Bituminous Concrete Pavement.

7. All Granular Borrow placed below EL. 19.0 shall be meet the requirements of Subsection 703.19, Material for Underwater Backfill.

8. Construct the riprap shelf at Abutment No. 1 at EL. 42.00.

9. Construct the riprap shelf at Abutment No. 2 at EL. 30.00.

10. Place loam 2 inches deep on all new or reconstructed sideslopes, on areas of existing roadway and gravel shoulders outside the limits of new backslopes and toes of slope, or as directed by the Resident.

11. Erosion Control Mix may be substituted in those areas normally receiving loam and seed as directed by the Resident. Placement shall be in accordance with Standard Specifications Section 619, Mulch. Payment will be made under Item No. 619.1401, Erosion Control Mix.

12. Place a 24-in. wide strip of Temporary Erosion Control Blanket on the sideslopes along the top of the riprap and behind the wingwalls.

13. An NCHRP350 compliant guardrail end treatment shall be installed concurrently with the placement of each section of beam guardrail.

14. Extended-use Erosion Control Blanket, seeded gutters, riprap downspouts, and other gutters lined with Stone Ditch Protection shall be constructed after paving and shoulder work is completed, where it is apparent that runoff will cause continual erosion. Payment will be made under the appropriate Contract items.

15. Protective Coating for Concrete Surfaces shall be applied to the following areas:

All exposed surfaces of concrete curbs.
Fascias down to the drip notch.
All exposed surfaces of Concrete Transition Barriers.
Concrete wearing surfaces adjacent to Expansion Devices.
Top of Abutment No. 2 backwall and to one foot below the top of the backwall on the back side.

16. Project information referred to below may be accessed at the following MaineDOT web address: http://www.maine.gov/mdot/contractors/*projecttbl .

17. The existing bridge plans may be accessed at the MaineDOT web address. The plans are reproductions of the original drawings as prepared for the construction of the bridge. It is very unlikely that the plans will show any construction field changes or any alterations which may have been made to the bridge during its life span.

18. The hydrologic report of the bridge site may be accessed at the MaineDOT web address. The hydrologic report is based on MaineDOT's interpretation of the information obtained for the subject site. No assurance is given that the information or the conclusions of the report will be representative of actual conditions at the time of construction.

19. The following project geotechnical reports may be accessed at the MaineDOT web address:

a. Supplemental Geotechnical Design Report, Maine Kennebec Bridge, Richmond and Dresden, Maine, Soils Report No. 2013-01, MaineDOT Bridge Program, January 3, 2013.
b. Bridge Approaches, Route 197 over Kennebec River, Richmond and Dresden, Maine, Soils Report 2013-10, MaineDOT Highway Program, April 5, 2013.
c. Geotechnical Data Information Summary, Final Design Phase Geotechnical Investigation, Maine Kennebec Bridge, Richmond-Dresden Maine, Golder Assoc. Inc., September 25, 2012.
d. Geotechnical Design Report, Maine Kennebec Bridge, Richmond and Dresden, Maine, Soils Report No. 2012-11, MaineDOT Bridge Program, May 11, 2012.
e. Geotechnical Data Information Summary, Preliminary Geotechnical Investigation, Maine Kennebec Bridge, Richmond-Dresden Maine, Golder Assoc. Inc., February 3, 2012.

20. Geotechnical information furnished or referred to in this plan set is for the use of the Bidders and the Contractor. No assurance is given that the information or interpretations will be representative of actual subsurface conditions at the construction site. MaineDOT will not be responsible for the Bidders' or Contractor's interpretations of, or conclusions drawn from, the geotechnical information. The boring logs contained in the plan set present factual and interpretive subsurface information collected at discrete locations. Data provided may not be representative of the subsurface conditions between the boring locations.

21. Quantities included for pay items measured and paid for by Lump Sum are estimated quantities and are provided by MaineDOT for informational purposes only. Lump Sum pay items will be paid for at the Contract Bid amount, with no addition or reduction in payment to the Contractor if the actual final quantities are different from the MaineDOT provided estimated quantities, except as follows:

a. If a Lump Sum pay item is eliminated, the requirements of Standard Specifications Section 109.2, Elimination of Items, will take precedence.

b. If other Contract Documents specifically allow a change in payment for a Lump Sum pay item, those requirements will be followed.

c. If a design change results in changes to estimated quantities for Lump Sum pay items, price adjustments will be made in accordance with Standard Specifications Section 109.7, Equitable Adjustments to Compensation.

22. The Contractor shall submit a Bridge Demolition Plan to the Resident at least 10 business days prior to the start of demolition work. The plan shall outline the methods and equipment to be used to remove and dispose of all materials included in the existing bridge. No work related to the removal of the bridge shall be undertaken by the Contractor until MaineDOT has reviewed the Bridge Demolition Plan for appropriateness and completeness. Payment for all work necessary for developing, submitting and finalizing the Demolition Plan will be considered incidental to the bridge removal pay item.

23. The existing bridge shall be removed by and become the property of the Contractor. The steel portions of the existing bridge are coated with a lead- based paint system. The Contractor is responsible for the containment, proper management and disposal of all lead-contaminated hazardous waste generated by the process of demolishing the bridge. The Contractor is responsible for implementing appropriate OSHA mandated personal protection standards related to this process. Once the existing bridge is removed, the Contractor is solely responsible for the care, custody and control of the components of the existing bridge and any hazardous waste generated as a result of the storage, recycling or disposal of the bridge components, including lead-coated steel. The Contractor shall recycle or reuse the steel in accordance with the Maine Department of Environmental Protection's "Maine Hazardous Waste Management Regulations," Chapter 850. A copy of this regulation is available at MaineDOT's offices on Child Street in Augusta. Payment for all labor, materials, equipment and other costs required to remove and dispose of the existing bridge will be considered incidental to the bridge removal pay item.

24. Existing Piers No. 4, 5 & 6 and the upstream and downstream dolphins shall be removed to EL. -22.7 or a minimum of 1 foot below the streambed, whichever is lower. The remainder of the existing bridge piers shall be removed to a minimum of 1 foot below streambed. The existing abutments shall be removed to a minimum of 2 feet below existing grade. Abutment elements to remain shall have a minimum of 2 feet of cover and displaced existing riprap at each abutment shall be reused as directed by the Resident.

25. The archaeological investigation located approximately between Sta. 107+50 to 109+00 Left will continue through July 1, 2013. The Contractor will be unable to access this area until after July 1, 2013. The building to be removed located at Sta. 108+50 Left shall not be removed until after July 1, 2013.

26. The area of soils with high organic content between Sta. 125+00 and Sta. 127+00 shown on Sheet No. 7 of the plans will be grubbed to a depth of 2 feet or as directed by the Resident. Final limits of grubbing will be determined by the Resident. Grubbings from this area may be used as loam on side slopes with the approval of the Landscape Architect.

27. Toe drains shall be constructed from Sta. 125+00 to Sta. 127+75 to the lines and grades shown on the plans. These drains shall be constructed of material meeting the requirements of Standard Specification 703.19, Granular Borrow (Material for Underwater backfill) and will be paid for under Item No. 203.25, Granular Borrow.

28. Areas beyond the 1.5H :1V line of the Toe Drain shall not be used as a waste area for fine - grained dredge spoils east of Sta. 109+50 in Richmond or west of Sta. 128+00 in Dresden. Compaction shall meet the requirements of Standard Specification 203 for the full width of the embankment in these areas. Fine - grained dredge spoil materials may be used as fill in waste areas as shown on Standard Detail 203(01) west of Sta. 109+50 and east of Sta. 128+00. These materials may also be used for grading and landscape berms between Lincoln Road and Route 197.

29. The existing flag pole and boulder with commemorative plaque located in Fort Richmond Park, Station 108+30 right, shall be removed and reset as directed by the Resident. Payment will be considered incidental to Contract items.

30. The Contractor shall maintain access to Densmore Lane and Lincoln Road for a WB-50 vehicle at all times.

31. Payment for removing and resetting the gate at the entrance to the Water District Road (Sta. 12+80 ± Left) will be considered incidental to Contract items.

32. All reinforcing steel shown with a "C" in the bar designation (i.e. Pier No. 1: ICP700 and Abutment No. 2: CB501) shall meet the requirements of Special Provisions Section 503, Corrosion Resistant Reinforcing.

STATE OF MAINE
DEPARTMENT OF TRANSPORTATION

AC-BH-1267(400)

WIN 12674.00

BRIDGE NO. 2506

BRIDGE PLANS

PROJ. MANAGER	N. Benoit	BY	DATE
DESIGN-DETAILED	Team South	D. Damren	Mar. 2013
CHECKED-REVIEWED	------	------	------
DESIGN2-DETAILED2	------	------	------
DESIGN3-DETAILED3	------	------	------
REVISIONS: 1	------	------	------
REVISIONS: 2	------	------	------
REVISIONS: 3	------	------	------
REVISIONS: 4	------	------	------
FIELD CHANGES	------	------	------

SIGNATURE

P.E. NUMBER

DATE

MAINE KENNEBEC BRIDGE
KENNEBEC RIVER
RICHMOND, SAGADAHOC CTY. DRESDEN, LINCOLN CTY.

GENERAL CONSTRUCTION NOTES

SHEET NUMBER
3
OF 238

Filename: ...\003_General Construction Notes.dgn Division: BRIDGE Username: dana.damren Date:4/10/2013

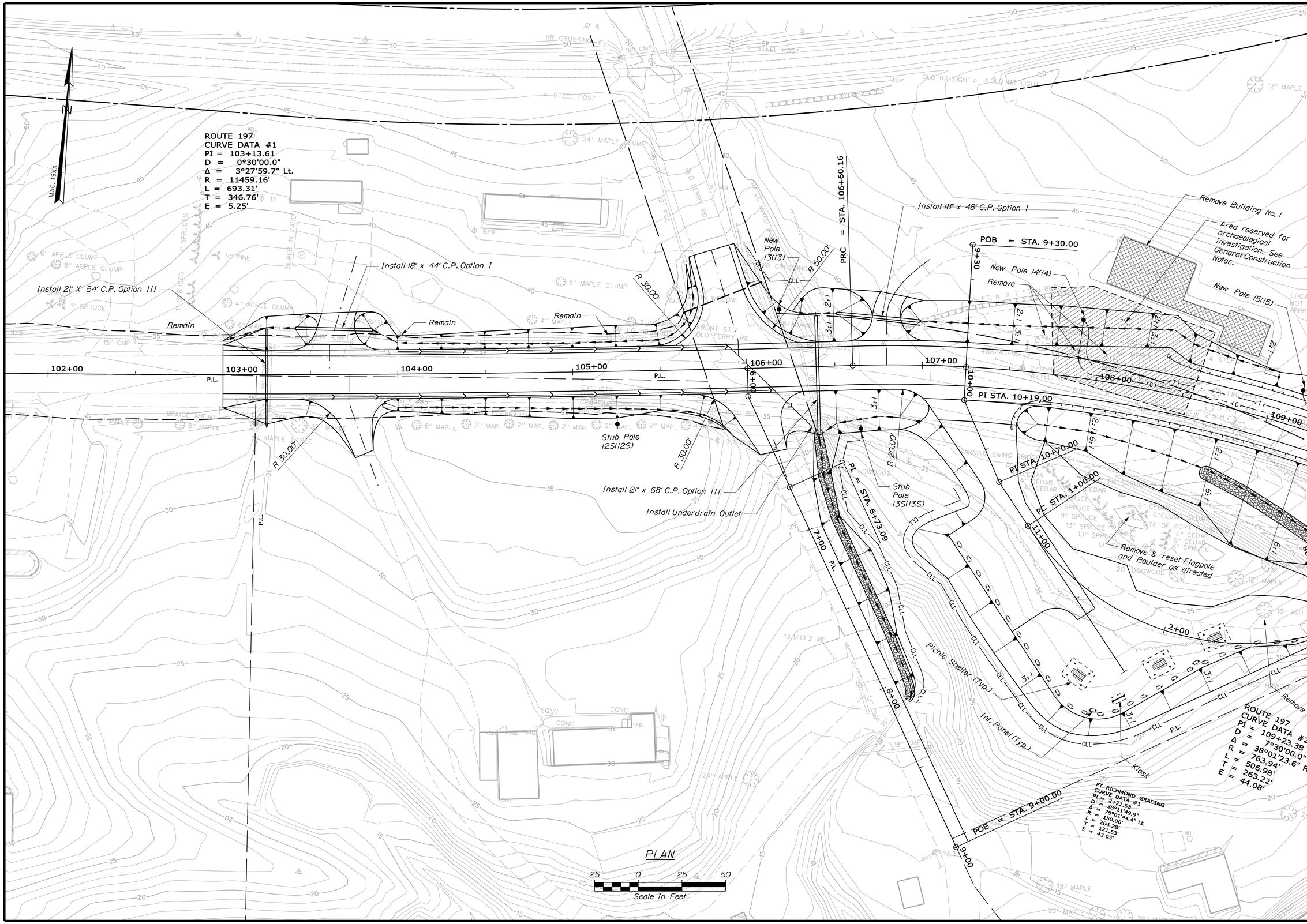

STATE OF MAINE
DEPARTMENT OF TRANSPORTATION

AC-BH-1267(400)

WIN 12674.00

BRIDGE NO. 2506

BRIDGE PLANS

PROJ. MANAGER	N. Benoit	BY	DATE
DESIGN-DETAILED	Team South	DMD/DMS	April 2012
CHECKED-REVIEWED			
DESIGN2-DETAILED2			
DESIGN3-DETAILED3			
REVISIONS 1			
REVISIONS 2			
REVISIONS 3			
REVISIONS 4			
FIELD CHANGES			

SIGNATURE

P.E. NUMBER

DATE

MAINE KENNEBEC BRIDGE
KENNEBEC RIVER
RICHMOND, SAGADAHOC CTY. DRESDEN, LINCOLN CTY.

GENERAL PLAN

SHEET NUMBER

4

OF 238

Filename: ...\msta\004_General Plan.dgn Division: BRIDGE Username: dana.damren Date:4/10/2013

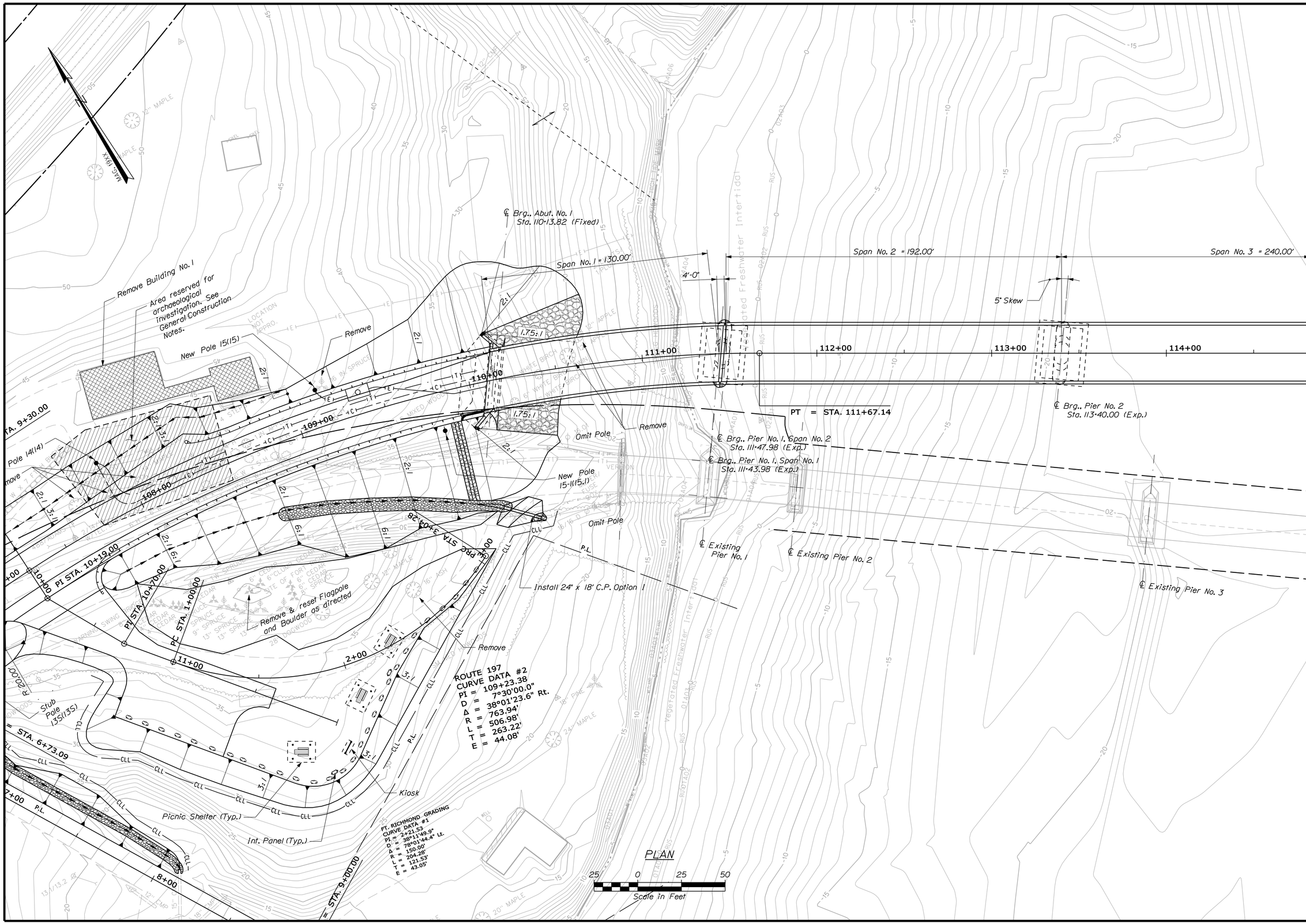

STATE OF MAINE
DEPARTMENT OF TRANSPORTATION

AC-BH-1267(400)

WIN 12674.00

BRIDGE NO. 2506

BRIDGE PLANS

		BY	DATE
PROJ. MANAGER	N. Benoit		
DESIGN-DETAILED	Team South	DMD/DMS	April 2012
CHECKED-REVIEWED	-----	-----	-----
DESIGN2-DETAILED2	-----	-----	-----
DESIGN3-DETAILED3	-----	-----	-----
REVISIONS 1	-----	-----	-----
REVISIONS 2	-----	-----	-----
REVISIONS 3	-----	-----	-----
REVISIONS 4	-----	-----	-----
FIELD CHANGES	-----	-----	-----

SIGNATURE

P.E. NUMBER

DATE

MAINE KENNEBEC BRIDGE
KENNEBEC RIVER
RICHMOND, SAGADAHOC CTY. DRESDEN, LINCOLN CTY.

GENERAL PLAN

SHEET NUMBER

5

OF 238

Filename: ...\msta\005_General Plan.dgn Division: BRIDGE Username: dana.damren Date:4/10/2013

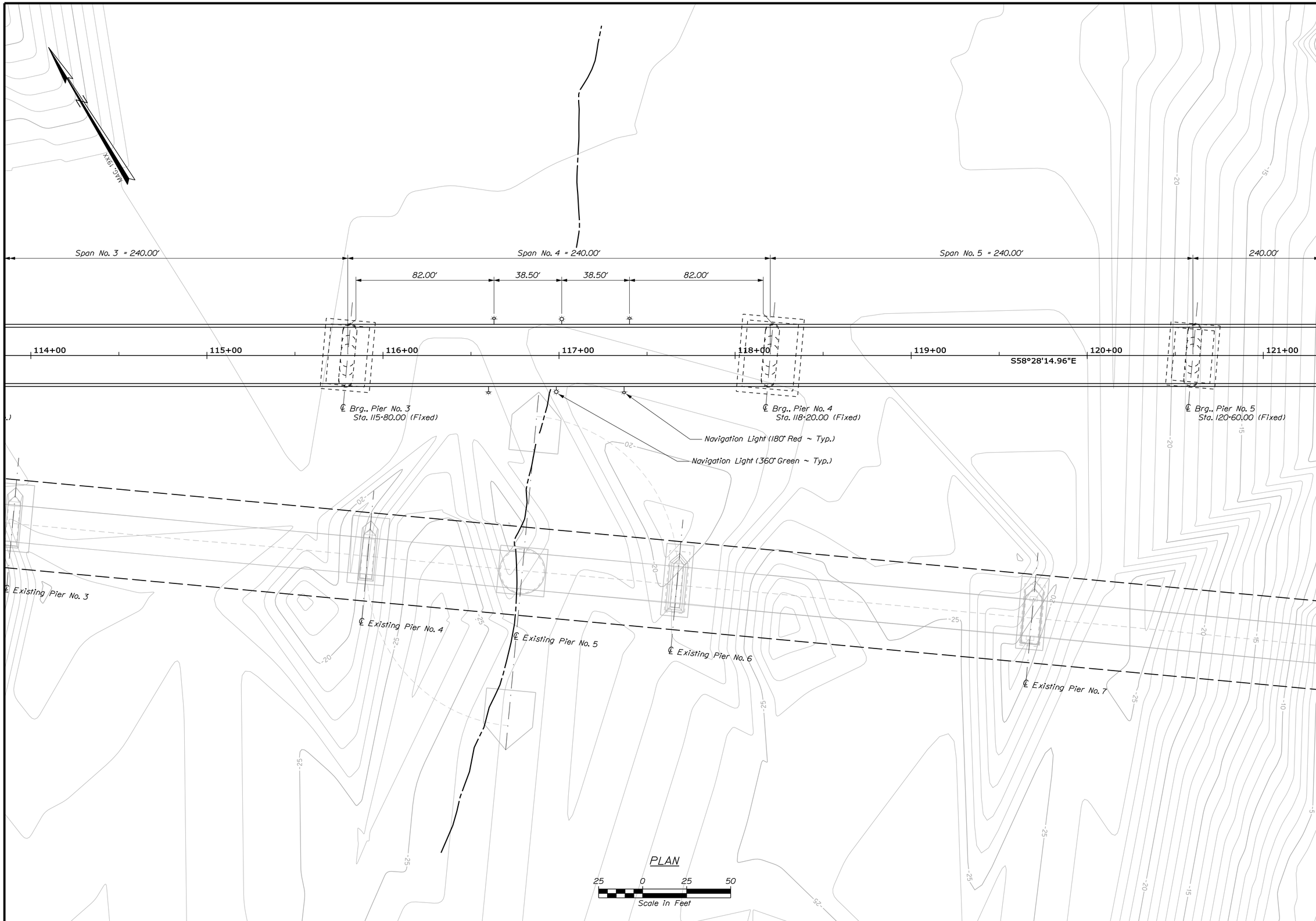

STATE OF MAINE
DEPARTMENT OF TRANSPORTATION

AC-BH-1267(400)

WIN 12674.00

BRIDGE NO. 2506

BRIDGE PLANS

PROJ. MANAGER	N. Benoit			
DESIGN-DETAILED	Team South	DMD/DMS	April 2012	
CHECKED-REVIEWED	------	------	------	
DESIGN2-DETAILED2	------	------	------	
DESIGN3-DETAILED3	------	------	------	
REVISIONS 1	------	------	------	
REVISIONS 2	------	------	------	
REVISIONS 3	------	------	------	
REVISIONS 4	------	------	------	
FIELD CHANGES	------	------	------	

SIGNATURE

P.E. NUMBER

DATE

MAINE KENNEBEC BRIDGE
KENNEBEC RIVER
RICHMOND, SAGADAHOC CTY. DRESDEN, LINCOLN CTY.

GENERAL PLAN

SHEET NUMBER

6

OF 238

Filename: ...\msta\006_General Plan.dgn Division: BRIDGE Username: dana.damren Date:4/10/2013

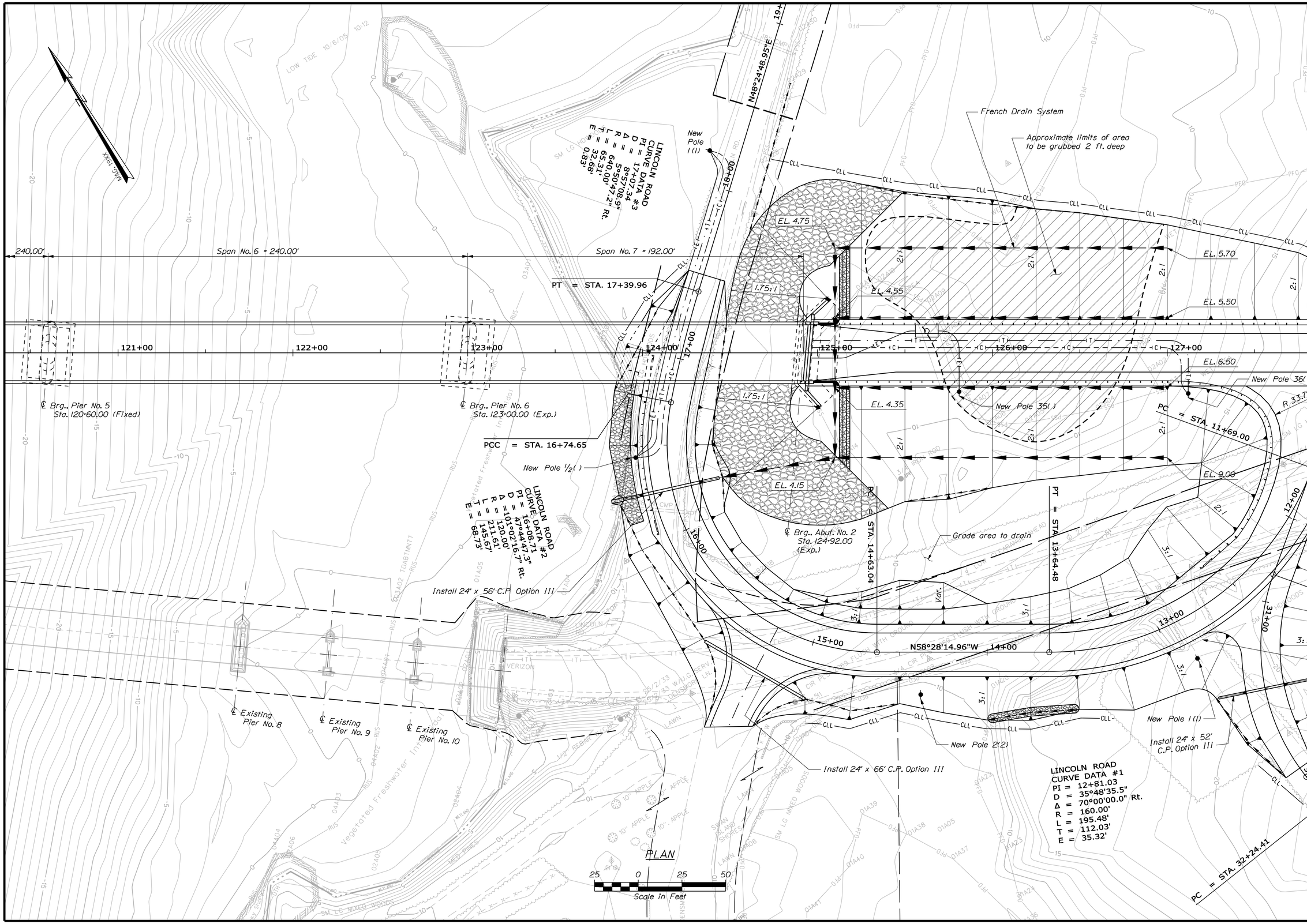

STATE OF MAINE
DEPARTMENT OF TRANSPORTATION

AC-BH-1267(400)

WIN 12674.00

BRIDGE NO. 2506

BRIDGE PLANS

PROJ. MANAGER	N. Benoit	BY	DATE
DESIGN-DETAILED	Team South	DMD/DMS	April 2012
CHECKED-REVIEWED	-----	-----	-----
DESIGN2-DETAILED2	-----	-----	-----
DESIGN3-DETAILED3	-----	-----	-----
REVISIONS 1	-----	-----	-----
REVISIONS 2	-----	-----	-----
REVISIONS 3	-----	-----	-----
REVISIONS 4	-----	-----	-----
FIELD CHANGES	-----	-----	-----

SIGNATURE

P.E. NUMBER

DATE

MAINE KENNEBEC BRIDGE
KENNEBEC RIVER
RICHMOND, SAGADAHOC CTY. DRESDEN, LINCOLN CTY.

GENERAL PLAN

SHEET NUMBER

7

OF 238

Filename: ...\msta\007_GeneralPlan.dgn Division: BRIDGE Username: dana.damren Date:4/11/2013

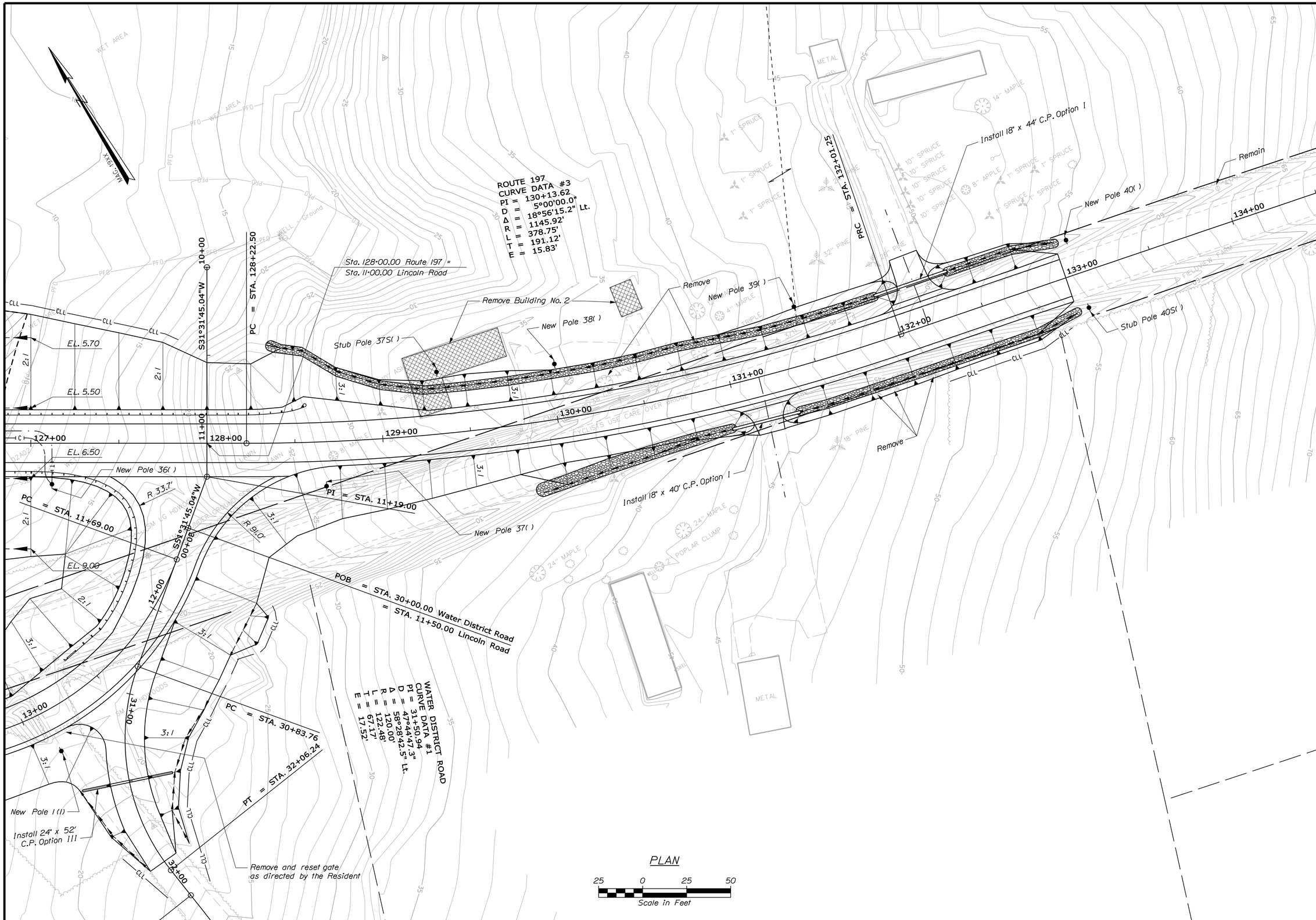

STATE OF MAINE
DEPARTMENT OF TRANSPORTATION

AC-BH-1267(400)

WIN 12674.00

BRIDGE NO. 2506

BRIDGE PLANS

PROJ. MANAGER	N. Benoit	BY	DATE
DESIGN-DETAILED	Team South	DMD/DMS	April 2012
CHECKED-REVIEWED	-----	-----	-----
DESIGN2-DETAILED2	-----	-----	-----
DESIGN3-DETAILED3	-----	-----	-----
REVISIONS 1	-----	-----	-----
REVISIONS 2	-----	-----	-----
REVISIONS 3	-----	-----	-----
REVISIONS 4	-----	-----	-----
FIELD CHANGES	-----	-----	-----

SIGNATURE

P.E. NUMBER

DATE

MAINE KENNEBEC BRIDGE
KENNEBEC RIVER
RICHMOND, SAGADAHOC CTY. DRESDEN, LINCOLN CTY.

GENERAL PLAN

SHEET NUMBER

8

OF 238

Filename: ...\msta\008_GeneralPlan.dgn Division: BRIDGE Username: dana.damren Date:4/11/2013

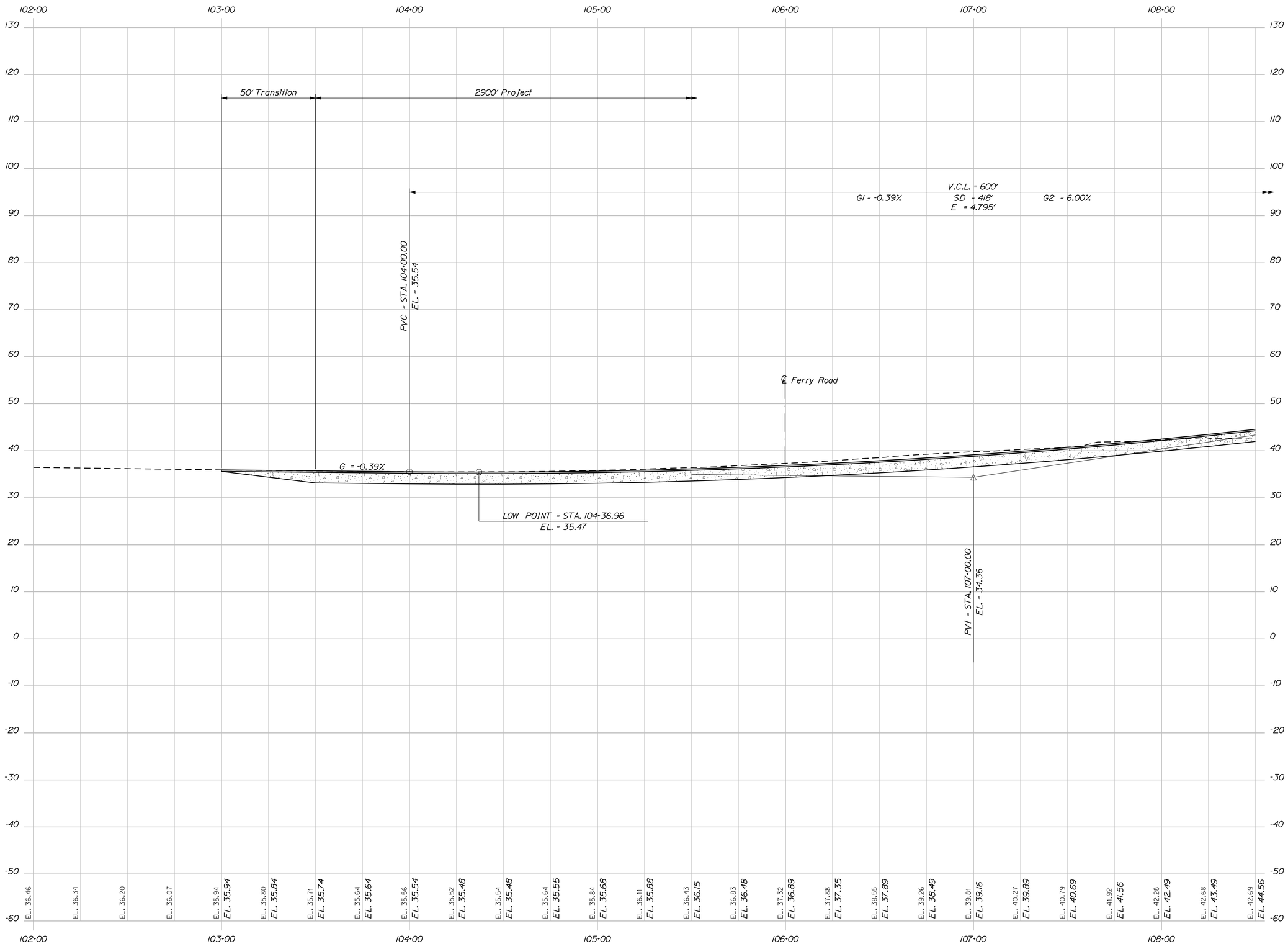

PROFILE - ROUTE 197

STATE OF MAINE
DEPARTMENT OF TRANSPORTATION

AC-BH-1267(400)

WIN 12674.00

BRIDGE NO. 2506

BRIDGE PLANS

PROJ. MANAGER	N. Benoit	BY	DATE
DESIGN-DETAILED	Team South	D. Damren	April 2012
CHECKED-REVIEWED	------	------	------
DESIGN2-DETAILED2	------	------	------
DESIGN3-DETAILED3	------	------	------
REVISIONS 1	------		------
REVISIONS 2	------		------
REVISIONS 3	------		------
REVISIONS 4	------		------
FIELD CHANGES	------		------

SIGNATURE

P.E. NUMBER

DATE

MAINE KENNEBEC BRIDGE
KENNEBEC RIVER
RICHMOND, SAGADAHOC CTY. DRESDEN, LINCOLN CTY.

PROFILE: ROUTE 197

SHEET NUMBER

9

OF 238

Filename: ...\msta\009_Profile_Route 197.dgn Division: BRIDGE Username: dana.damren Date:3/27/2013

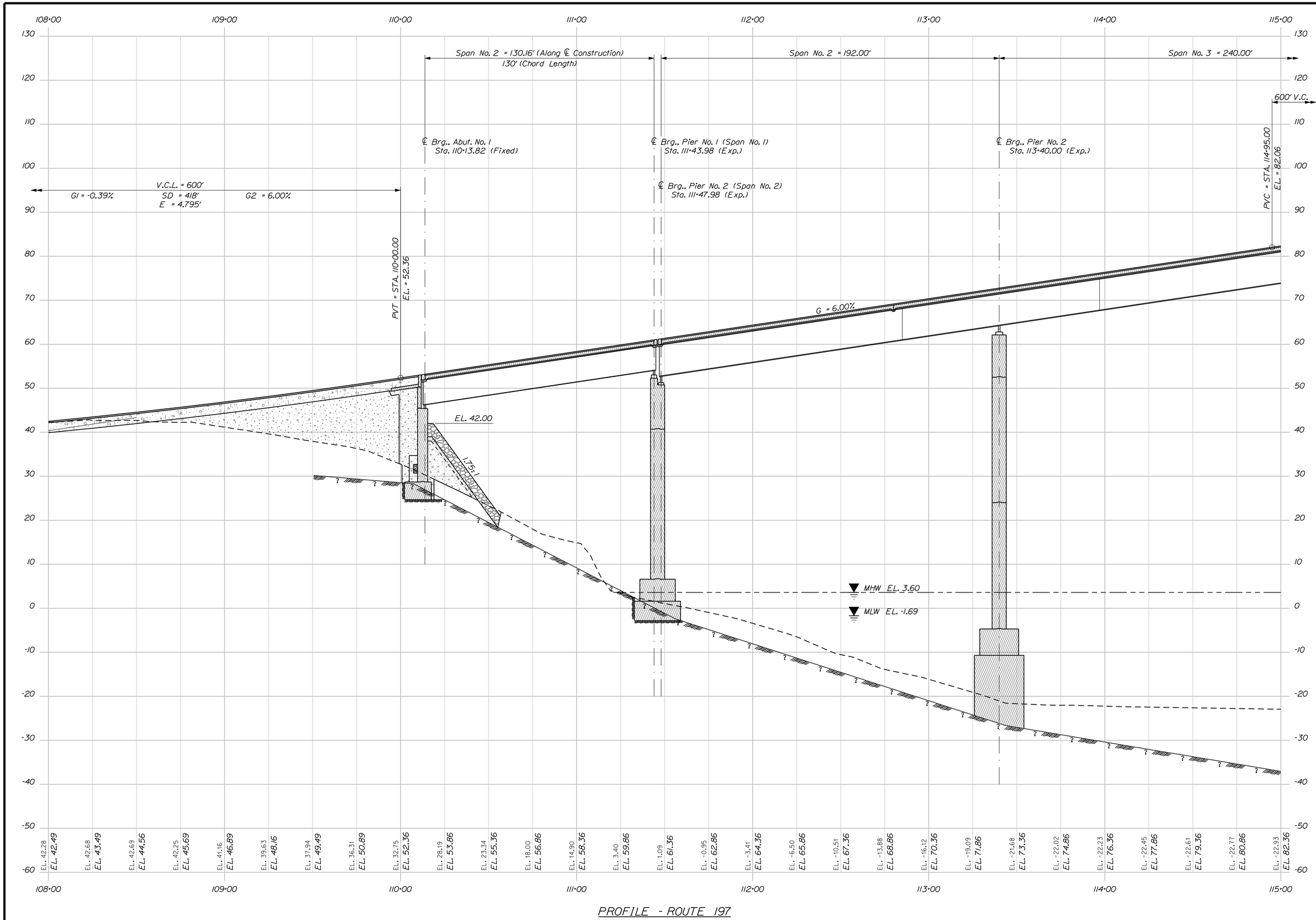

PROFILE - ROUTE 197

STATE OF MAINE
DEPARTMENT OF TRANSPORTATION

AC-BH-1267(400)

WIN 12674.00

BRIDGE NO. 2506

BRIDGE PLANS

		BY	DATE
PROJ. MANAGER	N. Benoit		
DESIGN-DETAILED	Team South	D. Damren	April 2012
CHECKED-REVIEWED	-----	-----	-----
DESIGN2-DETAILED2	-----	-----	-----
DESIGN3-DETAILED3	-----	-----	-----
REVISIONS 1	-----		-----
REVISIONS 2	-----		-----
REVISIONS 3	-----		-----
REVISIONS 4	-----		-----
FIELD CHANGES	-----		-----

SIGNATURE

P.E. NUMBER

DATE

MAINE KENNEBEC BRIDGE
KENNEBEC RIVER
RICHMOND, SAGADAHOC CTY. DRESDEN, LINCOLN CTY.

PROFILE: ROUTE 197

SHEET NUMBER
10
OF 238

Filename: ...\msta\010_Profile_Route 197.dgn Division: BRIDGE Username: dana.damren Date:3/27/2013

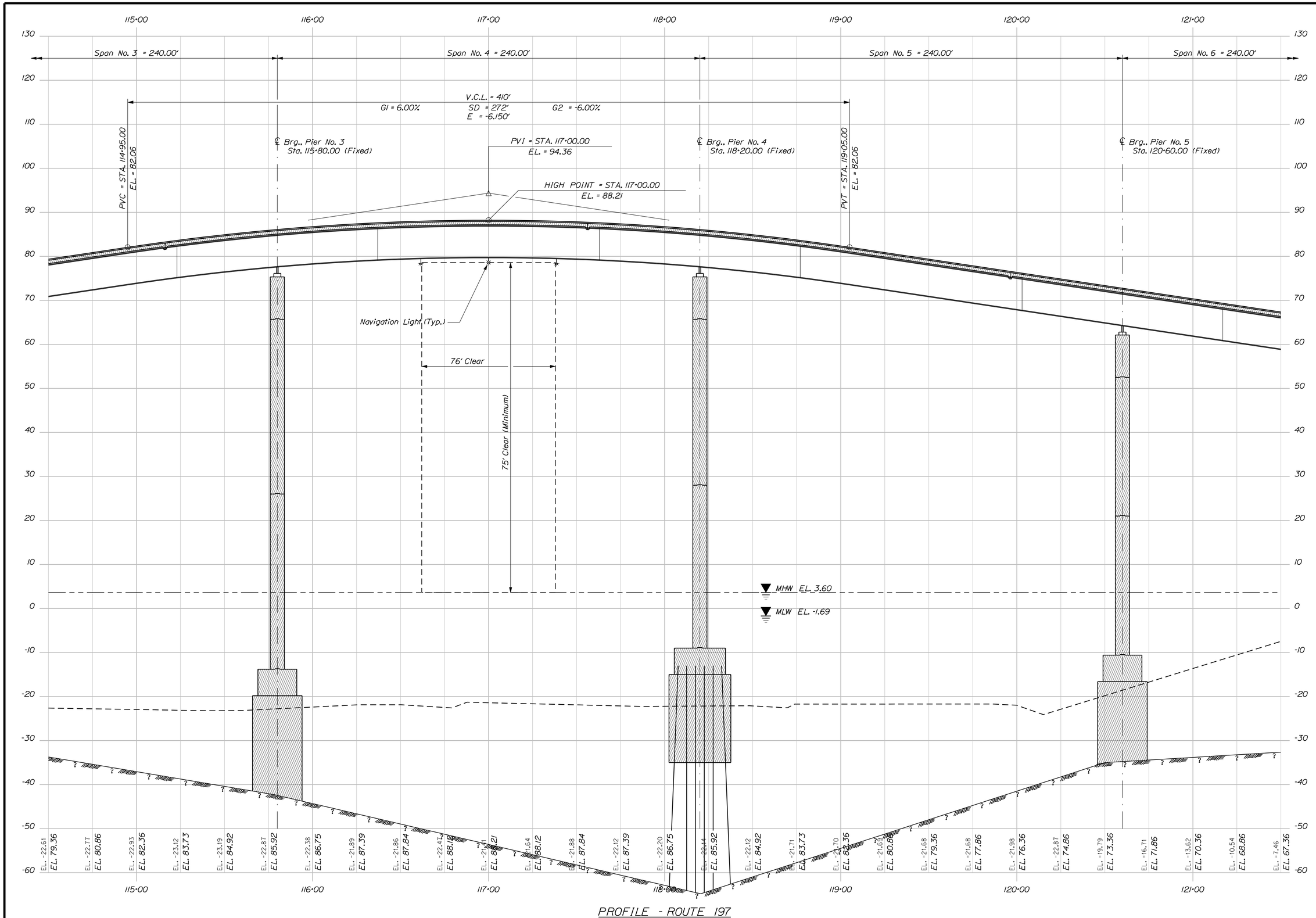

PROFILE - ROUTE 197

STATE OF MAINE
DEPARTMENT OF TRANSPORTATION

AC-BH-1267(400)

WIN 12674.00

BRIDGE NO. 2506

BRIDGE PLANS

PROJ. MANAGER	N. Benoit	BY	DATE
DESIGN-DETAILED	Team South	D. Damren	April 2012
CHECKED-REVIEWED	-----	-----	-----
DESIGN2-DETAILED2	-----	-----	-----
DESIGN3-DETAILED3	-----	-----	-----
REVISIONS 1	-----	-----	-----
REVISIONS 2	-----	-----	-----
REVISIONS 3	-----	-----	-----
REVISIONS 4	-----	-----	-----
FIELD CHANGES	-----	-----	-----

SIGNATURE

P.E. NUMBER

DATE

MAINE KENNEBEC BRIDGE
KENNEBEC RIVER
RICHMOND, SAGADAHOC CTY. DRESDEN, LINCOLN CTY.

PROFILE: ROUTE 197

SHEET NUMBER

11

OF 238

Filename: ...\msto\011_Profile_Route 197.dgn Division: BRIDGE Username: dana.damren Date:3/27/2013

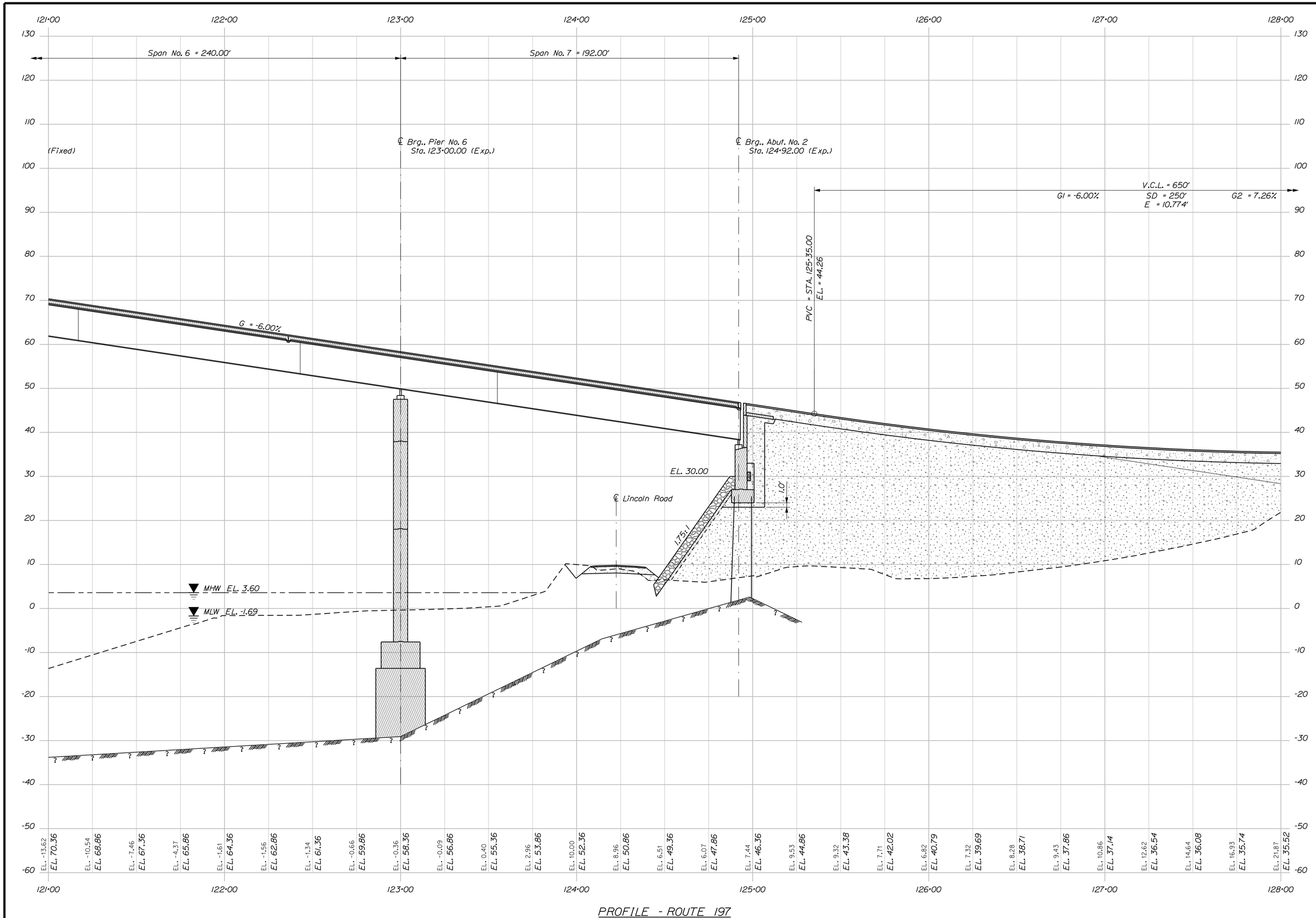

PROFILE - ROUTE 197

STATE OF MAINE
DEPARTMENT OF TRANSPORTATION

AC-BH-1267(400)

WIN 12674.00

BRIDGE NO. 2506

BRIDGE PLANS

PROJ. MANAGER	N. Benoit	BY	DATE
DESIGN-DETAILED	Team South	D. Damren	April 2012
CHECKED-REVIEWED	-----	-----	-----
DESIGN2-DETAILED2	-----	-----	-----
DESIGN3-DETAILED3	-----	-----	-----
REVISIONS 1	-----	-----	-----
REVISIONS 2	-----	-----	-----
REVISIONS 3	-----	-----	-----
REVISIONS 4	-----	-----	-----
FIELD CHANGES	-----	-----	-----

SIGNATURE

P.E. NUMBER

DATE

MAINE KENNEBEC BRIDGE
KENNEBEC RIVER
RICHMOND, SAGADAHOC CTY. DRESDEN, LINCOLN CTY.

PROFILE: ROUTE 197

SHEET NUMBER

12

OF 238

Filename: ...\012_Profile_ Route 197.dgn Division: BRIDGE Username: dana.damren Date:3/27/2013

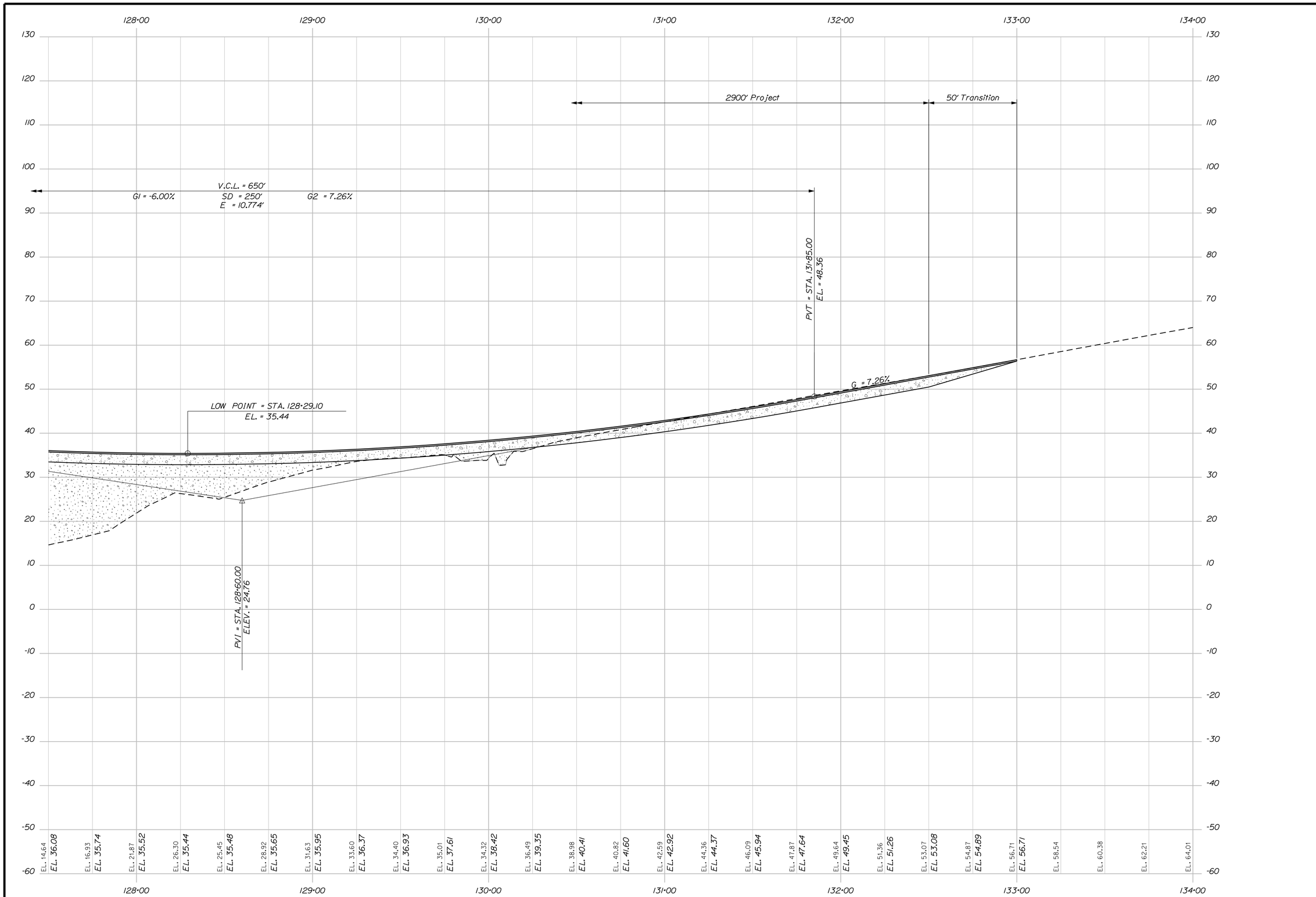

PROFILE - ROUTE 197

STATE OF MAINE
DEPARTMENT OF TRANSPORTATION

AC-BH-1267(400)

WIN 12674.00

BRIDGE NO. 2506

BRIDGE PLANS

PROJ. MANAGER	N. Benoit	BY	DATE	
DESIGN-DETAILED	Team South	D. Damren	April 2012	SIGNATURE
CHECKED-REVIEWED	------	------	------	------
DESIGN2-DETAILED2	------	------	------	P.E. NUMBER
DESIGN3-DETAILED3	------	------	------	------
REVISIONS 1	------	------	------	
REVISIONS 2	------	------	------	DATE
REVISIONS 3	------	------	------	------
REVISIONS 4	------	------	------	------
FIELD CHANGES	------	------	------	------

MAINE KENNEBEC BRIDGE
KENNEBEC RIVER
RICHMOND, SAGADAHOC CTY. DRESDEN, LINCOLN CTY.

PROFILE: ROUTE 197

SHEET NUMBER

13

OF 238

Filename: ...\msta\013_Profile_Route 197.dgn Division: BRIDGE Username: dana.damren Date:3/27/2013

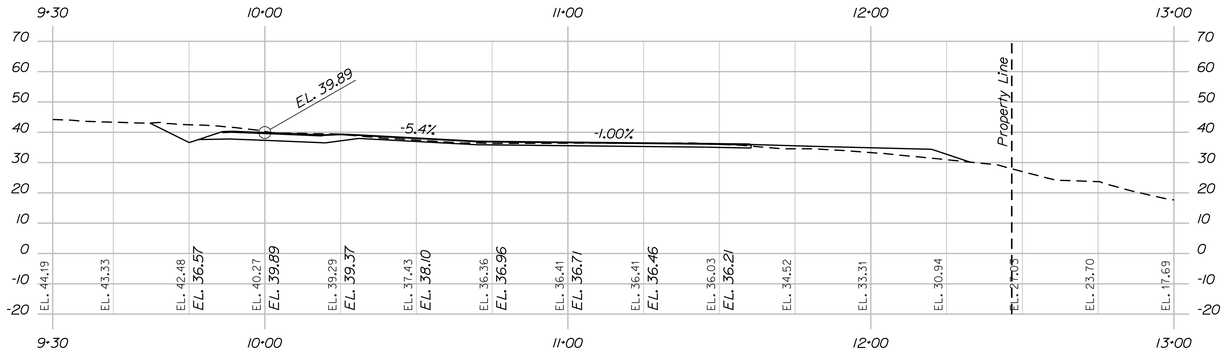

PROFILE - FORT RICHMOND PARK ENTRANCE

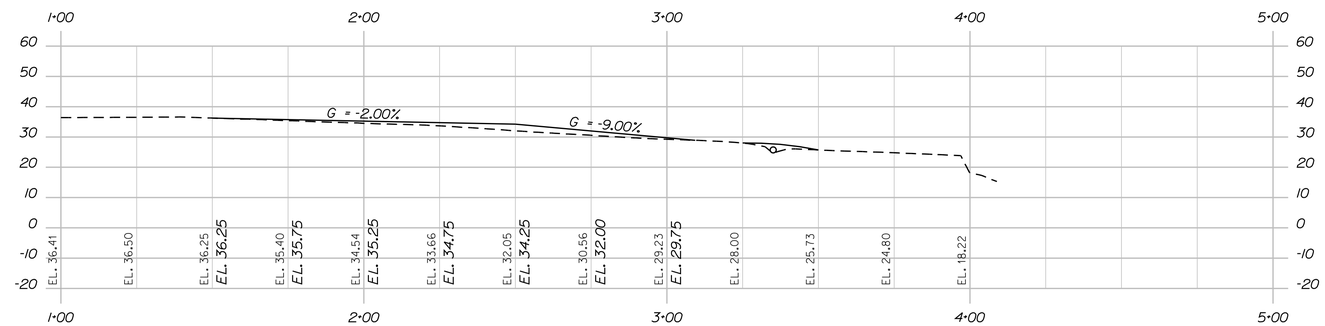

PROFILE - FORT RICHMOND PARK GRADING

Filename: ...\014_Profile_Fort Richmond Park.dgn Division: BRIDGE Username: dana.damren Date:3/27/2013

STATE OF MAINE
DEPARTMENT OF TRANSPORTATION

AC-BH-1267(400)

WIN 12674.00

BRIDGE NO. 2506 BRIDGE PLANS

PROJ. MANAGER	N. Benoit	BY	DATE
DESIGN-DETAILED	Team South	D. Damren	June 2012
CHECKED-REVIEWED	-----	-----	-----
DESIGN2-DETAILED2	-----	-----	-----
DESIGN3-DETAILED3	-----	-----	-----
REVISIONS 1	-----		-----
REVISIONS 2	-----		-----
REVISIONS 3	-----		-----
REVISIONS 4	-----		-----
FIELD CHANGES	-----		-----

SIGNATURE

P.E. NUMBER

DATE

MAINE KENNEBEC BRIDGE
KENNEBEC RIVER
RICHMOND, SAGADAHOC CTY. DRESDEN, LINCOLN CTY.

PROFILE: FORT RICHMOND PARK

SHEET NUMBER

14

OF 238

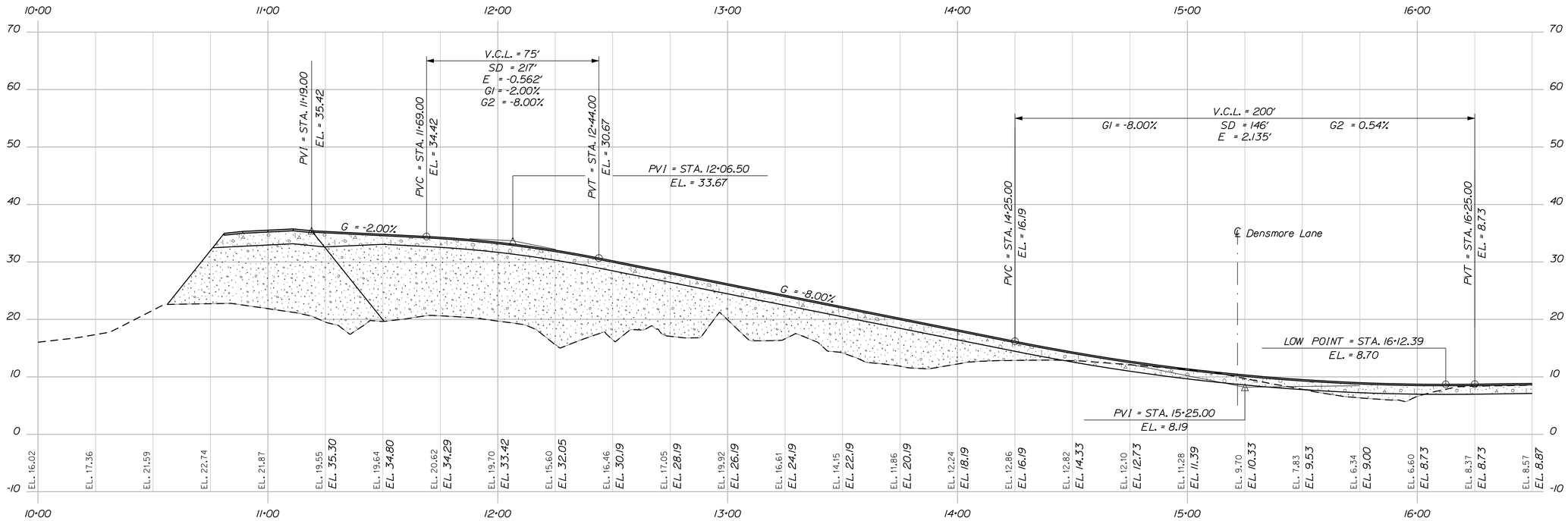

PROFILE - LINCOLN ROAD

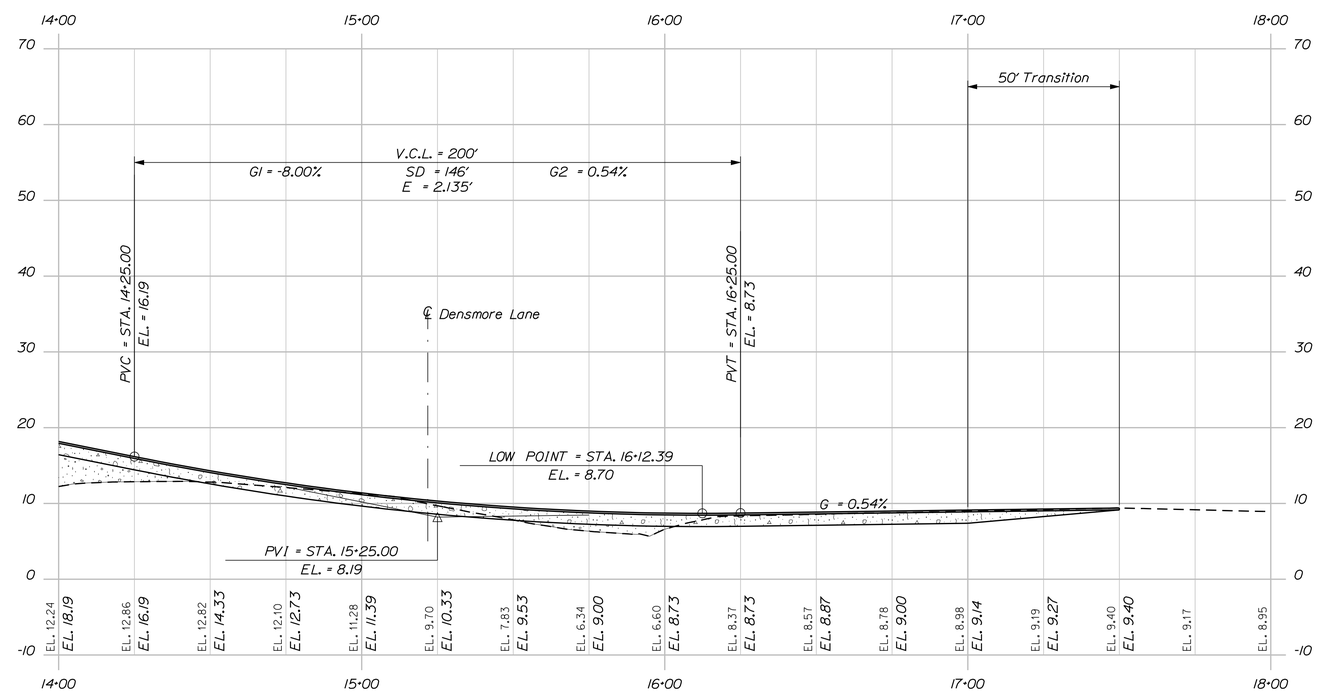

PROFILE - LINCOLN ROAD

STATE OF MAINE
DEPARTMENT OF TRANSPORTATION

AC-BH-1267(400)

WIN 12674.00

BRIDGE NO. 2506

BRIDGE PLANS

		BY	DATE
PROJ. MANAGER	N. Benoit		
DESIGN-DETAILED	D. Damren	D. Damren	June 2012
CHECKED-REVIEWED	-----	-----	-----
DESIGN2-DETAILED2	-----	-----	-----
DESIGN3-DETAILED3	-----	-----	-----
REVISIONS 1	-----	-----	-----
REVISIONS 2	-----	-----	-----
REVISIONS 3	-----	-----	-----
REVISIONS 4	-----	-----	-----
FIELD CHANGES	-----	-----	-----

SIGNATURE

P.E. NUMBER

DATE

MAINE KENNEBEC BRIDGE
KENNEBEC RIVER
RICHMOND, SAGADAHOC CTY. DRESDEN, LINCOLN CTY.

PROFILE: LINCOLN ROAD

SHEET NUMBER

15

OF 238

Filename: ...\015_Profile_Lincoln Road.dgn Division: BRIDGE Username: dana.damren Date:3/27/2013

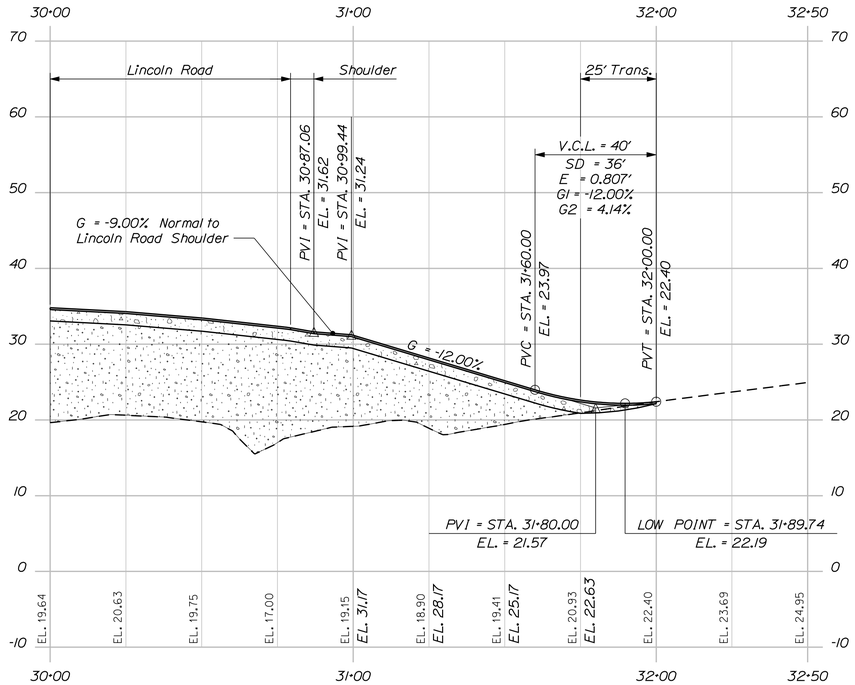

PROFILE - WATER DISTRICT ROAD

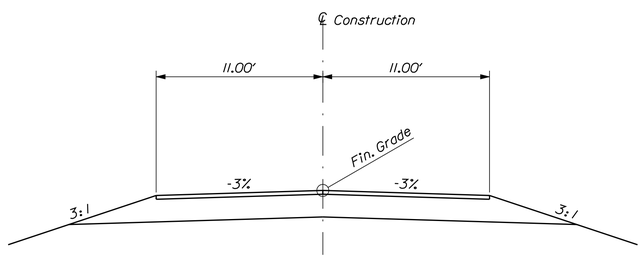

DESIGN SECTION ~ WATER DISTRICT ROAD

3" Hot Mix Asphalt Pavement
18" Aggregate Subbase Course - Gravel

Filename: ...\016_Profile_Water District Road.dgn Division: BRIDGE Username: dana.damren Date:3/27/2013

STATE OF MAINE
DEPARTMENT OF TRANSPORTATION

AC-BH-1267(400)

WIN 12674.00

BRIDGE NO. 2506 BRIDGE PLANS

PROJ. MANAGER	N. Benoit	BY	DATE
DESIGN-DETAILED	D. Damren	D. Damren	June 2012
CHECKED-REVIEWED	------	------	------
DESIGN2-DETAILED2	------	------	------
DESIGN3-DETAILED3	------	------	------
REVISIONS 1	------	------	------
REVISIONS 2	------	------	------
REVISIONS 3	------	------	------
REVISIONS 4	------	------	------
FIELD CHANGES	------	------	------

SIGNATURE

P.E. NUMBER

DATE

MAINE KENNEBEC BRIDGE
KENNEBEC RIVER
RICHMOND, SAGADAHOC CTY. DRESDEN, LINCOLN CTY.

PROFILE: WATER DISTRICT ROAD

SHEET NUMBER

16

OF 238

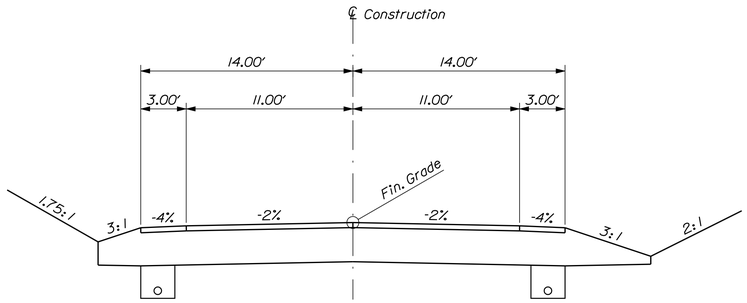

DESIGN SECTION ~ ROUTE 197
Sta. 103+00 to 106+00 ±

4" Hot Mix Asphalt Pavement
27" Aggregate Subbase Course - Gravel

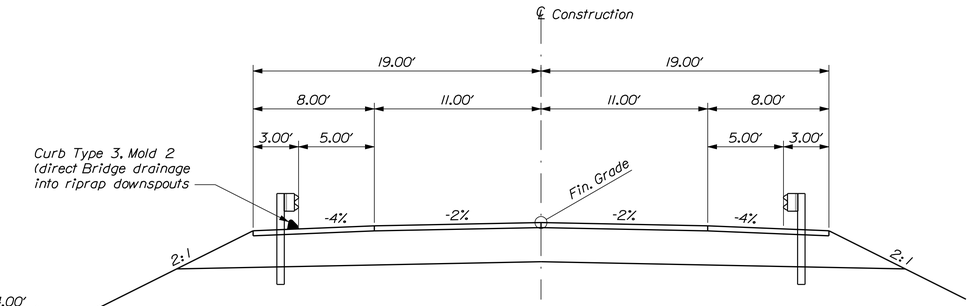

DESIGN SECTION ~ ROUTE 197
Bridge to Sta. 128+50 ±

4" Hot Mix Asphalt Pavement
27" Aggregate Subbase Course - Gravel

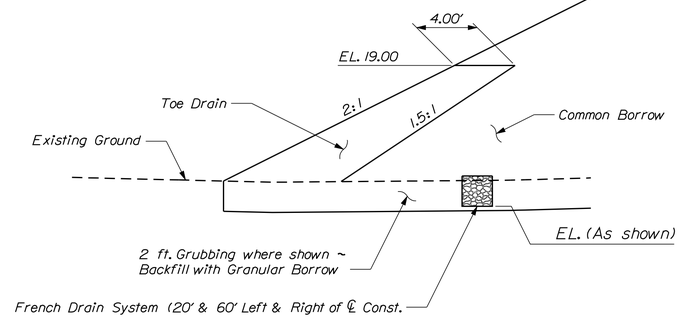

FILL SLOPE TOE DETAIL
Bridge to Sta. 128+00 ±

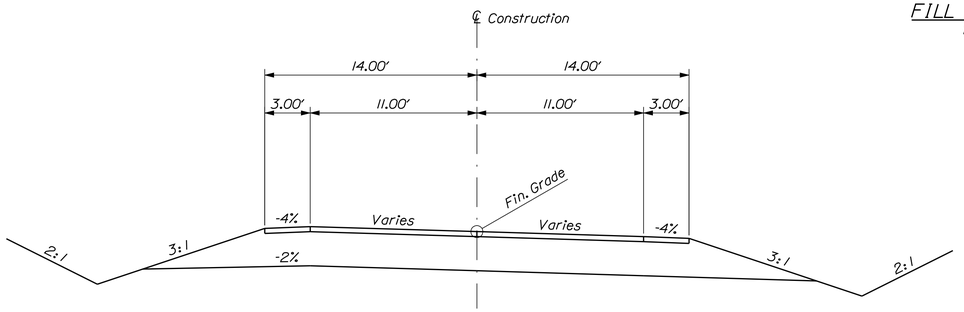

DESIGN SECTION ~ ROUTE 197
Sta. 106+00 ± to 108+50 ±

4" Hot Mix Asphalt Pavement
27" Aggregate Subbase Course - Gravel

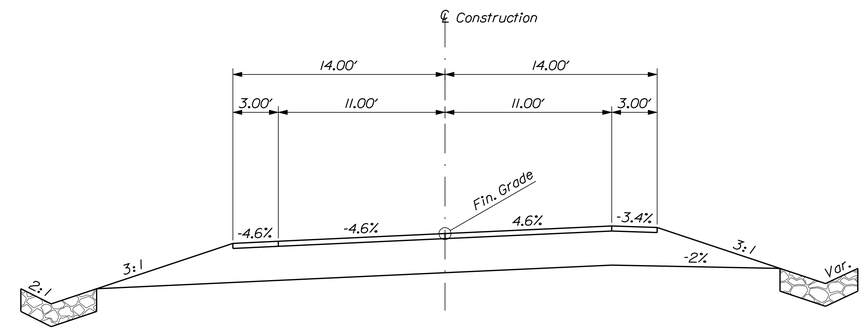

DESIGN SECTION ~ ROUTE 197
Sta. Sta. 128+50 ± to Sta. 133+00

4" Hot Mix Asphalt Pavement
27" Aggregate Subbase Course - Gravel

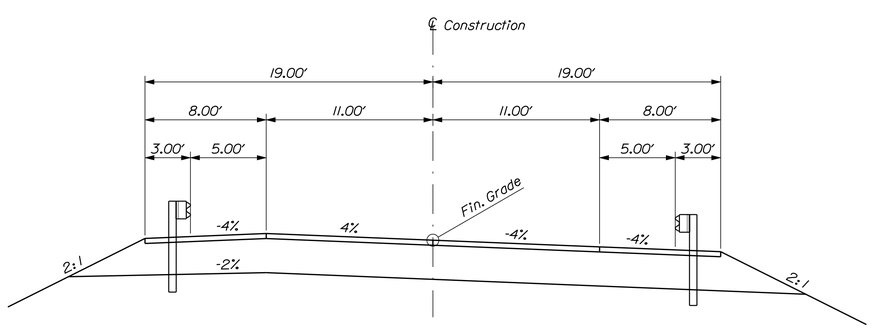

DESIGN SECTION ~ ROUTE 197
Sta. 108+50 ± to Bridge

4" Hot Mix Asphalt Pavement
27" Aggregate Subbase Course - Gravel

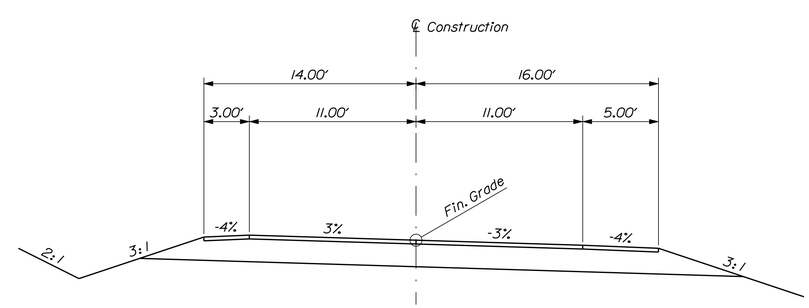

DESIGN SECTION ~ LINCOLN ROAD

3" Hot Mix Asphalt Pavement
18" Aggregate Subbase Course - Gravel

STATE OF MAINE
DEPARTMENT OF TRANSPORTATION

AC-BH-1267(400)

WIN 12674.00

BRIDGE NO. 2506

BRIDGE PLANS

PROJ. MANAGER	N. Benoit	BY	DATE
DESIGN-DETAILED	Team South	D. Damren	April 2012
CHECKED-REVIEWED	------	------	------
DESIGN2-DETAILED2	------	------	------
DESIGN3-DETAILED3	------	------	------
REVISIONS 1	------	------	------
REVISIONS 2	------	------	------
REVISIONS 3	------	------	------
REVISIONS 4	------	------	------
FIELD CHANGES	------	------	------

SIGNATURE

P.E. NUMBER

DATE

MAINE KENNEBEC BRIDGE
KENNEBEC RIVER
RICHMOND, SAGADAHOC CTY. DRESDEN, LINCOLN CTY.

TYPICAL APPROACH SECTIONS

SHEET NUMBER
17
OF 238

Filename: ...\017_Typical Approach Sections.dgn Division: BRIDGE Username: dana.damren Date:3/27/2013

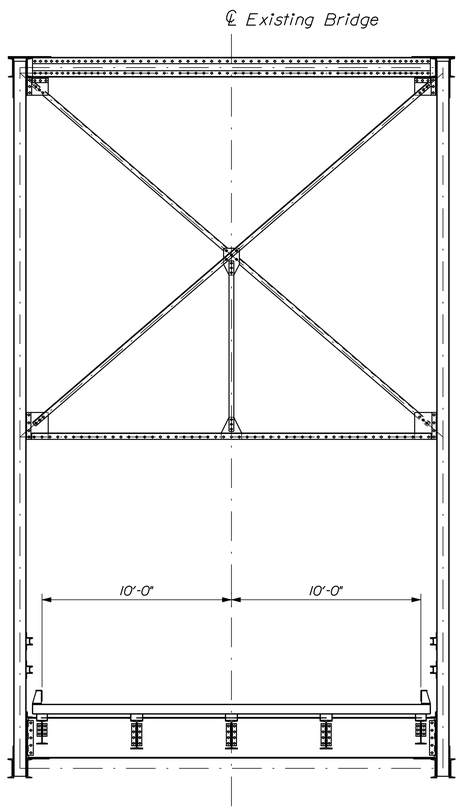

EXISTING BRIDGE SECTION

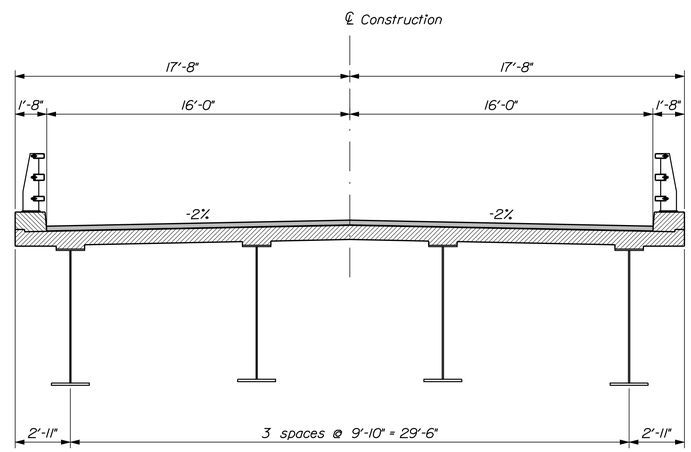

PROPOSED TRANSVERSE SECTION

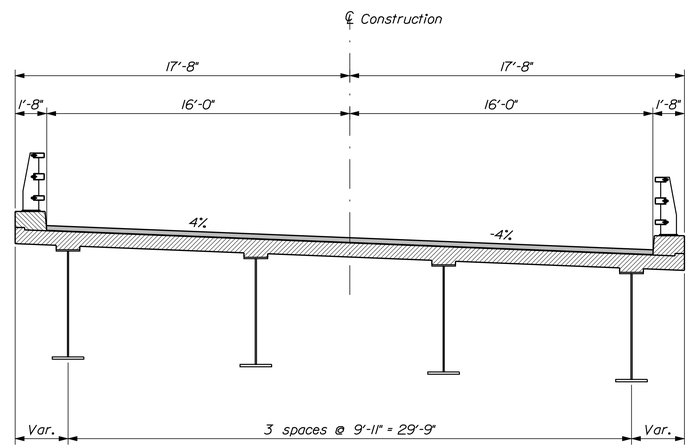

PROPOSED TRANSVERSE SECTION ~ SPAN NO. 1

STATE OF MAINE
DEPARTMENT OF TRANSPORTATION

AC-BH-1267(400)

WIN 12674.00

BRIDGE NO. 2506 BRIDGE PLANS

PROJ. MANAGER	N. Benoit	BY	DATE
DESIGN-DETAILED	Team South	D. Damren	April 2012
CHECKED-REVIEWED	-----	-----	-----
DESIGN2-DETAILED2	-----	-----	-----
DESIGN3-DETAILED3	-----	-----	-----
REVISIONS 1	-----	-----	-----
REVISIONS 2	-----	-----	-----
REVISIONS 3	-----	-----	-----
REVISIONS 4	-----	-----	-----
FIELD CHANGES	-----	-----	-----

SIGNATURE

P.E. NUMBER

DATE

MAINE KENNEBEC BRIDGE
KENNEBEC RIVER
RICHMOND, SAGADAHOC CTY. DRESDEN, LINCOLN CTY.

TYPICAL BRIDGE SECTIONS

SHEET NUMBER

18

OF 238

Filename: ...\018_TypicalBridge Sections.dgn Division: BRIDGE Username: dana.damren Date:3/27/2013

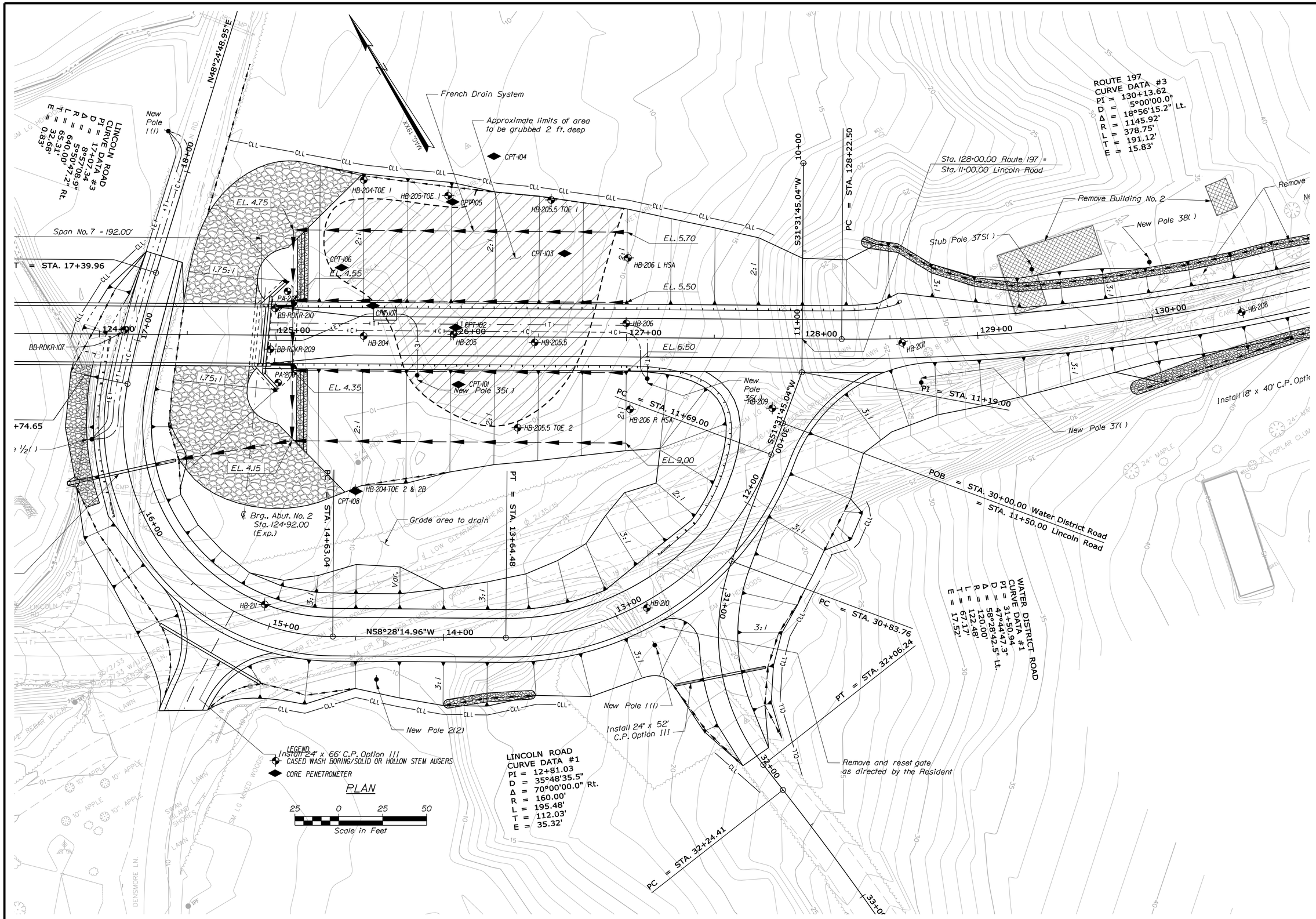

STATE OF MAINE
DEPARTMENT OF TRANSPORTATION

AC-BH-1267(400)

WIN 12674.00

BRIDGE NO. 2506

BRIDGE PLANS

		BY	DATE
PROJ. MANAGER	N. Benoit		
DESIGN-DETAILED	Team South	Team South	April 2012
CHECKED-REVIEWED	------	------	------
DESIGN2-DETAILED2	K.BRESKIN	T.WHITE	AUG 2012
DESIGN3-DETAILED3	------	------	------
REVISIONS 1	------	------	------
REVISIONS 2	------	------	------
REVISIONS 3	------	------	------
REVISIONS 4	------	------	------
FIELD CHANGES	------	------	------

SIGNATURE

P.E. NUMBER

DATE

MAINE KENNEBEC BRIDGE
KENNEBEC RIVER
RICHMOND-DRESDEN SAGADAHOC-LINCOLN CTYS.

BORING LOCATION PLAN

SHEET NUMBER

19

OF 238

Filename: ...\GEOTECH\MSTA\019_BLP1 APRO.dgn Division: BRIDGE Username: dana.damren Date:4/10/2013

Filename: ...\MSTA\020_BORING LOGS1APRO.dgn Division: BRIDGE Username: dana.damren Date:3/27/2013

Maine Department of Transportation — Soil/Rock Exploration Log — US CUSTOMARY UNITS

Project: Maine Kennebec Bridge #2506 — Location: Richmond-Dresden, Maine — WIN: 12674.00

Boring No.: HA-2.6

Driller:	MaineDOT	Elevation (ft.)	Auger ID/OD: N/A
Operator:	Enos/Giles/Daggett	Datum: NAVD88	Sampler: Hand Auger
Logged By:	B. Wilder	Rig Type: N/A	Hammer Wt./Fall: N/A
Date Start/Finish:	10/3/2012	Drilling Method: Hand Auger	Core Barrel: NA
Boring Location:	104+83, 12.2 ft Rt.	Casing ID/OD: NA	Water Level*: None Observed
Hammer Efficiency Factor:		Hammer Type: Automatic ☐ Hydraulic ☐	Rope & Cathead ☐

Definitions: D = Split Spoon Sample; MD = Unsuccessful Split Spoon Sample attempt; U = Thin Wall Tube Sample; MU = Unsuccessful Thin Wall Tube Sample attempt; V = Insitu Vane Shear Test, PP = Pocket Penetrometer; MV = Unsuccessful Insitu Vane Shear Test attempt; R = Rock Core Sample; SSA = Solid Stem Auger; HSA = Hollow Stem Auger; RC = Roller Cone; WOH = weight of 140lb. hammer; WOR/C = weight of rods or casing; WO1P = Weight of one person; S_u = Insitu Field Vane Shear Strength (psf); T_v = Pocket Torvane Shear Strength (psf); q_p = Unconfined Compressive Strength (ksf); Nuncorrected = Raw Field SPT N-value; Hammer Efficiency Factor = Annual Calibration Value; N_{60} = SPT N-uncorrected corrected for hammer efficiency; N_{60} = Hammer Efficiency Factor/60%; $S_{u(lab)}$ = Lab Vane Shear Strength (psf); WC = water content, percent; LL = Liquid Limit; PL = Plastic Limit; PI = Plasticity Index; G = Grain Size Analysis; C = Consolidation Test

Depth (ft.)	Sample No.	Pen./Rec. (in.)	Sample Depth (ft.)	Blows (/6 in.) Shear Strength (psf) or RQD (%)	Nuncorrected	N_{60}	Casing Blows	Elevation (ft.)	Visual Description and Remarks	Laboratory Testing Results/ AASHTO and Unified Class
0	PC-1		0.00 - 0.92				HA	-0.92	11" PAVEMENT, core taken.	
								-2.60	Brown, damp, gravelly, fine to coarse SAND, trace silt, cobbles. (Good Gravel) .	
									Bottom of Exploration at 2.60 feet below ground surface. STOPPED BY COBBLES.	
5										
10										
15										
20										

Remarks:

Stratification lines represent approximate boundaries between soil types; transitions may be gradual.

* Water level readings have been made at times and under conditions stated. Groundwater fluctuations may occur due to conditions other than those present at the time measurements were made.

Page 1 of 1 — Boring No.: HA-2.6

Maine Department of Transportation — Soil/Rock Exploration Log — US CUSTOMARY UNITS

Project: Maine Kennebec Bridge #2506 — Location: Richmond-Dresden, Maine — WIN: 12674.00

Boring No.: HB-202

Driller:	Maine Test Borings	Elevation (ft.) 43.0	Auger ID/OD: 4.5"
Operator:	R. Leonard	Datum: NAVD88	Sampler: 2" Split Spoon
Logged By:	N. Chinburg	Rig Type: Mobile B-53 Track	Hammer Wt./Fall: 140/30 SS
Date Start/Finish:	6/5/12	Drilling Method: SSA	Core Barrel: NA
Boring Location:	108+97, 2 ft. LT. See Remark 1.	Casing ID/OD: NA	Water Level*: Dry
Hammer Efficiency Factor: 0.6		Hammer Type: Automatic ☐ Hydraulic ☐	Rope & Cathead ☒

Depth (ft.)	Sample No.	Pen./Rec. (in.)	Sample Depth (ft.)	Blows (/6 in.) Shear Strength (psf) or RQD (%)	Nuncorrected	N_{60}	Casing Blows	Elevation (ft.)	Visual Description and Remarks	Laboratory Testing Results/ AASHTO and Unified Class
0							SSA			
5	10	24/14	1.00 - 3.00	2/2/7/16	9	9			Top 5": Brown, moist, loose, SAND (Marine Nearshore Deposits). Bottom 9": Tan, moist, stiff, SILT, some clay, trace fine sand, trace organics (roots) (Marine Nearshore Deposits). Dark brown, moist, hard, Silty CLAY, trace fine sand (Marine Nearshore Deposits).	GM267513 A-4, CL WC=25.8%
	20	24/19	3.00 - 5.00	10/19/26/42	45	45			Gray-brown, moist, hard, Silty CLAY, trace fine sand (Marine Nearshore Deposits). PP q_p = 9000 psf T_v = 1538 psf	#267574 A-4, CL LL=35, PL=18, PI=17 WC=20.7%
10	30	24/23	5.00 - 7.00	10/23/24/24	47	47				GM267576 A-6, CL LL=31, PL=22, PI=15 WC=24.4%
	40	24/24	8.00 - 10.00	5/7/11/14	18	18			Gray-brown, moist, very stiff, Clayey SILT, trace fine sand (Marine Nearshore Deposits). Sand present in 1/16"-1/2" lenses. PP q_p = 4400 psf T_v = 1640 psf Gravel at 10' based on drill behavior.	GM267577 A-6, CL WC=23.8%
15	50	8/8	11.00 - 11.67	17/50(2")	---			31.30 / 31.00	Top 2": Gray-brown, moist, clayey SILT (Marine Nearshore Deposits). Bottom 8": Tan, moist, fine to coarse SAND, some silt (Marine Nearshore Deposits).	
									Refusal on spoon at 11.7 ft. Refusal on auger at 12.0 ft. Possible bedrock at Elev. -12.0 ft based on auger behavior.	-11.70 -12.00
20									Bottom of Exploration at 12.00 feet below ground surface.	

Remarks:
1. As-drilled location not surveyed. Approximate location of the test boring references Station and Offset relative to the project baseline. Approximate ground surface elevation is based on the North American Vertical Datum of 1988 (NAVD88).
2. PP q_p = Pocket Penetrometer, unconfined compressive strength = $2q_u$.

Stratification lines represent approximate boundaries between soil types; transitions may be gradual.

* Water level readings have been made at times and under conditions stated. Groundwater fluctuations may occur due to conditions other than those present at the time measurements were made.

Page 1 of 1 — Boring No.: HB-202

Maine Department of Transportation — Soil/Rock Exploration Log — US CUSTOMARY UNITS

Project: Maine Kennebec Bridge #2506 — Location: Richmond-Dresden, Maine — WIN: 12674.00

Boring No.: HB-203

Driller:	Maine Test Borings	Elevation (ft.) 37.9	Auger ID/OD: 4.5"
Operator:	R. Leonard	Datum: NAVD88	Sampler: 2" Split Spoon
Logged By:	N. Chinburg	Rig Type: Mobile B-53 Track	Hammer Wt./Fall: 140/30 SS
Date Start/Finish:	6/5/12	Drilling Method: SSA	Core Barrel: NA
Boring Location:	109+58.4, 0.5 ft Rt.	Casing ID/OD: NA	Water Level*: Dry
Hammer Efficiency Factor: 0.6		Hammer Type: Automatic ☐ Hydraulic ☐	Rope & Cathead ☒

Depth (ft.)	Sample No.	Pen./Rec. (in.)	Sample Depth (ft.)	Blows (/6 in.) Shear Strength (psf) or RQD (%)	Nuncorrected	N_{60}	Casing Blows	Elevation (ft.)	Visual Description and Remarks	Laboratory Testing Results/ AASHTO and Unified Class
0							SSA			
5	10	24/21	1.00 - 3.00	6/9/12/15	21	21			Tan with dark brown lenses, moist, very stiff, Clayey SILT, trace fine sand (Marine Nearshore Deposits). Decreasing silt with depth. PP q_p = 6400- 8000 psf	GM267518 A-4, CL WC=20.0%
	20	24/21	3.00 - 5.00	15/25/50/44	75	75			Dark brown, moist, hard, Clayey SILT, trace fine sand (Marine Nearshore Deposits). PP q_p = >9000 psf T_v = 2204 psf	
10	30	24/24	5.00 - 7.00	10/17/20/26	37	37			Dark brown, moist, hard, Clayey SILT, trace fine sand (Marine Nearshore Deposits). Sand present in 1/16" to 1/8" lenses. PP q_p = 2400- 7000->9000 psf, harder with depth.	GM267519 A-4, CL WC=20.8%
	40	20/19	8.00 - 9.67	9/9/11/50(3")	20	20		28.20	Dark brown-gray, moist, very stiff, Clayey SILT, little fine sand (Marine Nearshore Deposits). Sand present in lenses. PP q_p = 2000- 4800 psf Refusal on spoon at 9.7 ft. Refusal on auger at 9.7 ft. Possible bedrock at Elev. 28.2 ft based on auger behavior.	GM267580 A-4, CL WC=23.3%
15										-9.70
20									Bottom of Exploration at 9.70 feet below ground surface.	

Remarks:
1. MaineDOT provided the surveyed location of the test boring referencing Station and Offset relative to the project baseline. Ground surface elevations are based on the North American Vertical Datum of 1988 (NAVD88).
2. PP q_p = Pocket Penetrometer, unconfined compressive strength = $2q_u$.

Stratification lines represent approximate boundaries between soil types; transitions may be gradual.

* Water level readings have been made at times and under conditions stated. Groundwater fluctuations may occur due to conditions other than those present at the time measurements were made.

Page 1 of 1 — Boring No.: HB-203

Maine Department of Transportation — Soil/Rock Exploration Log — US CUSTOMARY UNITS

Project: Maine Kennebec Bridge #2506 — Location: Richmond-Dresden, Maine — WIN: 12674.00

Boring No.: HB-204 TOE 1

Driller:	Maine Test Borings	Elevation (ft.) 6.8	Auger ID/OD: 4.5" SSA/ 2.5" HSA
Operator:	R. Leonard	Datum: NAVD88	Sampler: 2" Split Spoon
Logged By:	W. Henrick	Rig Type: Mobile B-53 Track	Hammer Wt./Fall: 140/30 SS
Date Start/Finish:	6/7/12	Drilling Method: SSA/HSA	Core Barrel: NA
Boring Location:	125+45.8, 88.7 ft Lt.	Casing ID/OD: NA	Water Level*: 0.5
Hammer Efficiency Factor: 0.6		Hammer Type: Automatic ☐ Hydraulic ☐	Rope & Cathead ☒

Depth (ft.)	Sample No.	Pen./Rec. (in.)	Sample Depth (ft.)	Blows (/6 in.) Shear Strength (psf) or RQD (%)	Nuncorrected	N_{60}	Casing Blows	Elevation (ft.)	Visual Description and Remarks	Laboratory Testing Results/ AASHTO and Unified Class
0	10	24/16	0.00 - 2.00	2/3/1/1	4	4	SSA		Top 2" dark brown, bottom 14" light brown, wet, very loose, silty fine SAND, trace clay, trace organics (Marine Nearshore Deposits).	
5	20	24/18	2.00 - 4.00	1/4/5/6	9	9			Top 6": Light brown-gray, wet, loose, SILT, some fine sand, little clay (Marine Nearshore Deposits). Bottom 12": Gray, wet, loose, fine SAND, little silt (Marine Nearshore Deposits).	GM267575 A-4, ML WC=22.3%
	30	24/12	4.00 - 6.00	2/3/4/5	7	7			Gray, wet, loose, SILT, some fine sand, trace clay (Marine Nearshore Deposits).	GM267586 A-4, ML WC=24.6%
10	40	24/8	6.00 - 8.00	WOH/1/3/4	4	4			Gray, wet, very loose, fine Sandy SILT, trace clay (Marine Nearshore Deposits).	GM267593 A-4, ML WC=25.8%
	50	24/10	8.00 - 10.00	2/5/5/6	10	10			Gray, wet, loose, fine Silty SAND, trace clay (Marine Nearshore Deposits). Coarser with depth.	GM267587 A-4, SM WC=24.5%
15	60	24/16	12.00 - 14.00	1/2/6/7	8	8	HSA		Top 4": Gray, wet, loose, fine to medium SAND, some silt (Marine Nearshore Deposits). Bottom 12": Gray, wet, loose, fine to medium SAND, trace gravel, trace silt (Marine Nearshore Deposits).	GM267594 A-3, SP-SM WC=20.0%
	70	24/11	15.00 - 17.00	4/5/20/13	25	25		-11.20	Light gray, wet, medium dense, fine to medium SAND, some silt (Marine Nearshore Deposits). Decreasing silt with depth. Lenses of gravel 17-18 ft. Refusal on auger at 18.0 ft. Possible bedrock at Elev. -11.2 ft. based on auger behavior.	-18.00
20									Bottom of Exploration at 18.00 feet below ground surface.	

Remarks:
1. MaineDOT provided the surveyed location of the test boring referencing Station and Offset relative to the project baseline. Ground surface elevations are based on the North American Vertical Datum of 1988 (NAVD88).

Stratification lines represent approximate boundaries between soil types; transitions may be gradual.

* Water level readings have been made at times and under conditions stated. Groundwater fluctuations may occur due to conditions other than those present at the time measurements were made.

Page 1 of 1 — Boring No.: HB-204 TOE 1

Maine Department of Transportation — Soil/Rock Exploration Log — US CUSTOMARY UNITS

Project: Maine Kennebec Bridge #2506 — Location: Richmond-Dresden, Maine — WIN: 12674.00

Boring No.: HB-204

Driller:	Maine Test Borings	Elevation (ft.) 9.7	Auger ID/OD: 4.5"
Operator:	R. Leonard	Datum: NAVD88	Sampler: 2" Split Spoon
Logged By:	W. Henrick	Rig Type: Mobile B-53 Track	Hammer Wt./Fall: 140/30 SS
Date Start/Finish:	6/7/12	Drilling Method: SSA	Core Barrel: NA
Boring Location:	125+50.4, 0.1 ft Rt.	Casing ID/OD: NA	Water Level*: 2.8
Hammer Efficiency Factor: 0.6		Hammer Type: Automatic ☐ Hydraulic ☐	Rope & Cathead ☒

Depth (ft.)	Sample No.	Pen./Rec. (in.)	Sample Depth (ft.)	Blows (/6 in.) Shear Strength (psf) or RQD (%)	Nuncorrected	N_{60}	Casing Blows	Elevation (ft.)	Visual Description and Remarks	Laboratory Testing Results/ AASHTO and Unified Class
0							SSA			
5	10	24/19	1.00 - 3.00	1/1/1/1	2	2			Light brown, moist, soft, fine Sandy SILT, trace clay (Marine Nearshore Deposits).	GM267584 A-4, ML WC=32.8%
	20	24/17	3.00 - 5.00	1/1/1/3	2	2			Light brown, wet, soft, fine SAND, some silt, trace clay (Marine Nearshore Deposits).	GM241669 A-2-4, SM WC=23.7%
10	30	24/14	5.00 - 7.00	1/4/6/6	10	10			Light brown, wet, stiff, fine Sandy SILT, trace clay (Marine Nearshore Deposits).	GM267585 A-4, ML WC=25.9%
	40	24/22	8.00 - 10.00	2/4/8/10	12	12			Gravel lens at 7.5 ft. based on auger behavior. Light brown, wet, medium dense, fine SAND, some silt, trace gravel, trace clay (Marine Nearshore Deposits).	GM241670 A-2-4, SM WC=13.6%
15	50	15/12	10.00 - 11.25	15/15/50(3")	---			-11.80 -11.80	Set HW casing to 10 ft. Light brown, wet, fine SAND, little gravel, little silt (Marine Nearshore Deposits), weathered rock in spoon tip.	
									Refusal on spoon at 11.3 ft. Refusal on auger at 11.5 ft. Possible bedrock at Elev. -11.6 ft.	-11.30 -11.50
20									Bottom of Exploration at 11.50 feet below ground surface.	

Remarks:
1. MaineDOT provided the surveyed location of the test boring referencing Station and Offset relative to the project baseline. Ground surface elevations are based on the North American Vertical Datum of 1988 (NAVD88).

Stratification lines represent approximate boundaries between soil types; transitions may be gradual.

* Water level readings have been made at times and under conditions stated. Groundwater fluctuations may occur due to conditions other than those present at the time measurements were made.

Page 1 of 1 — Boring No.: HB-204

Maine Department of Transportation — Soil/Rock Exploration Log — US CUSTOMARY UNITS

Project: Maine Kennebec Bridge #2506 — Location: Richmond-Dresden, Maine — WIN: 12674.00

Boring No.: HB-204 TOE 2

Driller:	Maine Test Borings	Elevation (ft.) 7.7	Auger ID/OD: 4.5"
Operator:	R. Leonard	Datum: NAVD88	Sampler: 2" Split Spoon
Logged By:	W. Henrick	Rig Type: Mobile B-53 Track	Hammer Wt./Fall: 140/30 SS
Date Start/Finish:	5/31/12	Drilling Method: SSA	Core Barrel: NA
Boring Location:	125+46.2, 88.0 ft Rt.	Casing ID/OD: NA	Water Level*: 2.3
Hammer Efficiency Factor: 0.6		Hammer Type: Automatic ☐ Hydraulic ☐	Rope & Cathead ☒

Depth (ft.)	Sample No.	Pen./Rec. (in.)	Sample Depth (ft.)	Blows (/6 in.) Shear Strength (psf) or RQD (%)	Nuncorrected	N_{60}	Casing Blows	Elevation (ft.)	Visual Description and Remarks	Laboratory Testing Results/ AASHTO and Unified Class
0							SSA			
5	10	24/22	1.00 - 3.00	1/WOH/1/2	1	1			Light brown, damp, very loose, fine Sandy SILT, trace clay, trace organics (roots) (Marine Nearshore Deposits).	GM267561 A-4, ML WC=42.2%
	20	24/18	3.00 - 5.00	1/2/4/7	6	6			Light brown, wet, loose, fine Silty SAND, trace clay (Marine Nearshore Deposits).	
10	30	24/19	5.00 - 7.00	2/3/5/7	8	8			Light and dark brown, wet, loose, fine Sandy SILT, trace clay (Marine Nearshore Deposits).	GM267595 A-2-4, SM WC=26.3%
	40	13/12	7.00 - 8.08	2/11/50(1")	---			-1.40	Light and dark brown, wet, loose, fine to medium SAND, some silt, trace clay (Marine Nearshore Deposits).	
15									Refusal on spoon at 9.1 ft. Refusal on auger at 9.3 ft. Possible bedrock at Elev. -1.4 ft. based on auger behavior.	-9.10
20									Bottom of Exploration at 9.10 feet below ground surface.	

Remarks:
1. MaineDOT provided the surveyed location of the test boring referencing Station and Offset relative to the project baseline. Ground surface elevations are based on the North American Vertical Datum of 1988 (NAVD88).

Stratification lines represent approximate boundaries between soil types; transitions may be gradual.

* Water level readings have been made at times and under conditions stated. Groundwater fluctuations may occur due to conditions other than those present at the time measurements were made.

Page 1 of 1 — Boring No.: HB-204 TOE 2

Maine Department of Transportation — Soil/Rock Exploration Log — US CUSTOMARY UNITS

Project: Maine Kennebec Bridge #2506 — Location: Richmond-Dresden, Maine — WIN: 12674.00

Boring No.: HB-204 TOE 2B

Driller:	Maine Test Borings	Elevation (ft.) 7.7	Auger ID/OD: 4.5"
Operator:	R. Leonard	Datum: NAVD88	Sampler: 2" Split Spoon
Logged By:	N. Chinburg	Rig Type: Mobile B-53 Track	Hammer Wt./Fall: 140/30 SS
Date Start/Finish:	6/4/12	Drilling Method: SSA	Core Barrel: NA
Boring Location:	125+46.2, 88.0 ft Rt.	Casing ID/OD: NA	Water Level*: 0
Hammer Efficiency Factor: 0.6		Hammer Type: Automatic ☐ Hydraulic ☐	Rope & Cathead ☒

Depth (ft.)	Sample No.	Pen./Rec. (in.)	Sample Depth (ft.)	Blows (/6 in.) Shear Strength (psf) or RQD (%)	Nuncorrected	N_{60}	Casing Blows	Elevation (ft.)	Visual Description and Remarks	Laboratory Testing Results/ AASHTO and Unified Class
0							SSA		Boring performed to collect additional soil sample.	
5	10	24/22	5.00 - 7.00	3/5/11/11	16	16		0.70	Light brown, wet, medium dense, fine Silty SAND, trace clay (Marine Nearshore Deposits).	GM241671 A-4, SM WC=24.0%
									Bottom of Exploration at 7.00 feet below ground surface.	-7.00
10										
15										
20										

Remarks:
1. MaineDOT provided the surveyed location of the test boring referencing Station and Offset relative to the project baseline. Ground surface elevations are based on the North American Vertical Datum of 1988 (NAVD88).
2. Sample 10 taken for additional direct shear test on boring HB-204-TOE 2.

Stratification lines represent approximate boundaries between soil types; transitions may be gradual.

* Water level readings have been made at times and under conditions stated. Groundwater fluctuations may occur due to conditions other than those present at the time measurements were made.

Page 1 of 1 — Boring No.: HB-204 TOE 2B

Maine Department of Transportation — Soil/Rock Exploration Log — US CUSTOMARY UNITS

Project: Maine Kennebec Bridge #2506 — Location: Richmond-Dresden, Maine — WIN: 12674.00

Boring No.: HB-205-TOE 1

Driller:	Maine Test Borings	Elevation (ft.) 8.3	Auger ID/OD: 4.5"
Operator:	R. Leonard	Datum: NAVD88	Sampler: 2" Split Spoon
Logged By:	W. Henrick	Rig Type: Mobile B-53 Track	Hammer Wt./Fall: 140/30 SS
Date Start/Finish:	6/7/12	Drilling Method: SSA	Core Barrel: NA
Boring Location:	125+87.5, 80.1 ft Lt.	Casing ID/OD: NA	Water Level*: 1.2
Hammer Efficiency Factor: 0.6		Hammer Type: Automatic ☐ Hydraulic ☐	Rope & Cathead ☒

Depth (ft.)	Sample No.	Pen./Rec. (in.)	Sample Depth (ft.)	Blows (/6 in.) Shear Strength (psf) or RQD (%)	Nuncorrected	N_{60}	Casing Blows	Elevation (ft.)	Visual Description and Remarks	Laboratory Testing Results/ AASHTO and Unified Class
0	10	24/12	0.00 - 2.00	1/1/1/2	2	2	SSA		Light gray grading to light brown, moist, very loose, fine Sandy SILT, trace clay, trace organics (roots) (Marine Nearshore Deposits).	
5	20	24/17	3.00 - 5.00	4/3/4/11	7	7			Light brown, wet, loose, fine Sandy SILT, trace clay (Marine Nearshore Deposits).	GM267564 A-4, ML Non Plastic WC=20.9% Org. Cont.= 1.4%
	30	24/10	5.00 - 7.00	5/5/5/6	10	10			Light brown, wet, loose, fine Sandy SILT, trace gravel, trace clay. (Marine Nearshore Deposits).	
10	40	24/14	8.00 - 10.00	2/3/3/5	6	6			Light gray, wet, loose, fine Sandy SILT, trace clay (Marine Nearshore Deposits).	GM241673 A-4, ML WC=19.9%
	50	24/13	10.00 - 12.00	3/3/4/6	7	7			Gray, wet, loose, Silty fine SAND, trace clay (Marine Nearshore Deposits).	
15								-5.40 -5.80	Possible bedrock at Elev. -5.4 ft. based on auger behavior.	-13.70
									Refusal on auger at 14.1 ft.	-14.10
20									Bottom of Exploration at 14.10 feet below ground surface.	

Remarks:
1. MaineDOT provided the surveyed location of the test boring referencing Station and Offset relative to the project baseline. Ground surface elevations are based on the North American Vertical Datum of 1988 (NAVD88).

Stratification lines represent approximate boundaries between soil types; transitions may be gradual.

* Water level readings have been made at times and under conditions stated. Groundwater fluctuations may occur due to conditions other than those present at the time measurements were made.

Page 1 of 1 — Boring No.: HB-205-TOE 1

STATE OF MAINE
DEPARTMENT OF TRANSPORTATION

AC-BH-1267(400)

WIN 12674.00

BRIDGE NO. 2506

BRIDGE PLANS

PROJ. MANAGER	N. Benoit	BY	DATE
DESIGN-DETAILED	Team South	Team South	April 2012
CHECKED-REVIEWED	-----	-----	-----
DESIGN2-DETAILED2	K.BRESKIN	T.WHITE	JAN 2013
DESIGN3-DETAILED3	-----	-----	-----
REVISIONS 1	-----	-----	-----
REVISIONS 2	-----	-----	-----
REVISIONS 3	-----	-----	-----
REVISIONS 4	-----	-----	-----
FIELD CHANGES	-----	-----	-----

SIGNATURE

P.E. NUMBER

DATE

MAINE KENNEBEC BRIDGE
KENNEBEC RIVER
RICHMOND-DRESDEN SAGADAHOC-LINCOLN CTYS.

BORING LOGS

SHEET NUMBER
20
OF 238

Filename: ...\MSTA\021_BORING LOGS2 APRO.dgn Division: BRIDGE Username: dana.damren Date:3/27/2013

Maine Department of Transportation
Soil/Rock Exploration Log
US CUSTOMARY UNITS

Project: Maine Kennebec Bridge #2506		Location: Richmond-Dresden, Maine		Boring No.:	HB-205
				WIN:	12674.00
Driller:	Maine Test Borings	Elevation (ft.)	6.7	Auger ID/OD:	4.5"
Operator:	R. Leonard	Datum:	NAVD88	Sampler:	2" Split Spoon
Logged By:	M. Henrick	Rig Type:	Mobile B-53 Track	Hammer Wt./Fall:	140/30 SS
Date Start/Finish:	5/30/12	Drilling Method:	SSA/CWB	Core Barrel:	NA
Boring Location:	126+01.5, 1.2 ft Lt.	Casing ID/OD:	HW	Water Level*:	0.0 '
Hammer Efficiency Factor: 0.6		Hammer Type:	Automatic ☐ Hydraulic ☐ Rope & Cathead ☒		

Definitions:
D = Split Spoon Sample
MD = Unsuccessful Split Spoon Sample attempt
U = Thin Wall Tube Sample
MU = Unsuccessful Thin Wall Tube Sample attempt
V = Insitu Vane Shear Test, PP = Pocket Penetrometer
MV = Unsuccessful Insitu Vane Shear Test attempt
R = Rock Core Sample
SSA = Solid Stem Auger
HSA = Hollow Stem Auger
RC = Roller Cone
WOH = weight of 140lb. hammer
WOR/C = weight of rods or casing
WO1P = Weight of one person
S_u = Insitu Field Vane Shear Strength (psf)
T_v = Pocket Torvane Shear Strength (psf)
q_p = Unconfined Compressive Strength (ksf)
N-uncorrected = Raw field SPT N-value
Hammer Efficiency Factor = Annual Calibration Value
N_{60} = SPT N-uncorrected corrected for hammer efficiency
N_{60} = (Hammer Efficiency Factor/60%)*N-uncorrected
$S_{u(lab)}$ = Lab Vane Shear Strength (psf)
WC = water content, percent
LL = Liquid Limit
PL = Plastic Limit
PI = Plasticity Index
G = Grain Size Analysis
C = Consolidation Test

Depth (ft.)	Sample No.	Pen./Rec. (in.)	Sample Depth (ft.)	Blows (/6 in.) Shear Strength (psf) or RQD (%)	N-uncorrected	N_{60}	Casing Blows	Elevation (ft.)	Graphic Log	Visual Description and Remarks	Laboratory Testing Results/ AASHTO and Unified Class.
0							SSA				
	1D	24/24	1.00 - 3.00	WOH/WOH/1/1	1	1				Top 14": Dark gray, wet, very soft, SILT, some fine sand, little organics (roots) (Marine Nearshore Deposits). Bottom 10": wood, partially decomposed.	#267596 Org. Cont.= 19.5%
	2D	24/16	3.00 - 5.00	WOH/WOH/WOH/WOH	---					Dark gray, wet, very soft, fine Sandy SILT, little clay, trace organics (Marine Nearshore Deposits).	G#267591 A-4, CL-ML WC=125.7%
5	3D V1	24/15	5.00 - 7.00 5.60 - 5.96	WOH/WOH/1/WOH Su=491/45 psf	1	1	OPEN			Set HW casing to 5 ft. Dark gray, wet, very soft, fine Sandy SILT, trace clay, trace organics (roots) (Marine Nearshore Deposits). Increasing sand with depth. 55x110 mm vane raw torque readings: V1: 11.0/1.0 ft-lbs MV2: Would not push.	G#267565 A-4, ML WC=81.3%
	MV2		6.00 - 6.36	Would not push							
	MV3		7.90 - 8.26	Would not push						MV3: Would not push.	
	4D	24/24	8.00 - 10.00	2/3/3/1	6	6				Gray, wet, medium stiff, fine Sandy SILT, trace clay (Marine Nearshore Deposits).	G#241672 A-4, ML WC=20.6%
10											
								-5.30		12.00 Gravel at 12' based on drill behavior.	
	5D	24/5	13.00 - 15.00	10/10/9/7	19	19				Gray, wet, medium dense, fine to coarse Sandy GRAVEL, little silt, trace clay (Glacial Till).	G#267597 A-1-b, GM WC=8.5%
15											
	6D	24/15	19.00 - 21.00	25/27/28/49	55	55				Set HW casing to 19' and wash ahead. Gray, wet, very dense, fine to coarse SAND, little gravel, some silt (Glacial Till).	G#267566 A-2-4, SM WC=12.0%
20											
								-17.20		23.90 Bedrock at Elev. -17.2 ft. based on drill behavior. Advance roller bit to 24.5' to confirm.	
								-17.80		24.50 Bottom of Exploration at 24.50 feet below ground surface.	
25											
30											
35											
40											
45											
50											

Remarks:

1. MaineDOT provided the surveyed location of the test boring referencing Station and Offset relative to the project baseline. Ground surface elevations are based on the North American Vertical Datum of 1988 (NAVD88).

Stratification lines represent approximate boundaries between soil types; transitions may be gradual.

* Water level readings have been made at times and under conditions stated. Groundwater fluctuations may occur due to conditions other than those present at the time measurements were made.

Page 1 of 1

Boring No.: HB-205

Maine Department of Transportation
Soil/Rock Exploration Log
US CUSTOMARY UNITS

Project: Maine Kennebec Bridge #2506		Location: Richmond-Dresden, Maine		Boring No.:	HB-205.5 TOE 1
				WIN:	12674.00
Driller:	Maine Test Borings	Elevation (ft.)	8.4	Auger ID/OD:	4.5"
Operator:	G. Rudnicki	Datum:	NAVD88	Sampler:	2" Split Spoon
Logged By:	N. Chinburg	Rig Type:	Mobile B-53 Track	Hammer Wt./Fall:	140/30 SS
Date Start/Finish:	6/27/12	Drilling Method:	HSA	Core Barrel:	NA
Boring Location:	126+56.6, 78.1 ft Lt.	Casing ID/OD:	NA	Water Level*:	4.1
Hammer Efficiency Factor: 0.6		Hammer Type:	Automatic ☐ Hydraulic ☐ Rope & Cathead ☒		

Definitions:
D = Split Spoon Sample
MD = Unsuccessful Split Spoon Sample attempt
U = Thin Wall Tube Sample
MU = Unsuccessful Thin Wall Tube Sample attempt
V = Insitu Vane Shear Test, PP = Pocket Penetrometer
MV = Unsuccessful Insitu Vane Shear Test attempt
R = Rock Core Sample
SSA = Solid Stem Auger
HSA = Hollow Stem Auger
RC = Roller Cone
WOH = weight of 140lb. hammer
WOR/C = weight of rods or casing
WO1P = Weight of one person
S_u = Insitu Field Vane Shear Strength (psf)
T_v = Pocket Torvane Shear Strength (psf)
q_p = Unconfined Compressive Strength (ksf)
N-uncorrected = Raw field SPT N-value
Hammer Efficiency Factor = Annual Calibration Value
N_{60} = SPT N-uncorrected corrected for hammer efficiency
N_{60} = (Hammer Efficiency Factor/60%)*N-uncorrected
$S_{u(lab)}$ = Lab Vane Shear Strength (psf)
WC = water content, percent
LL = Liquid Limit
PL = Plastic Limit
PI = Plasticity Index
G = Grain Size Analysis
C = Consolidation Test

Depth (ft.)	Sample No.	Pen./Rec. (in.)	Sample Depth (ft.)	Blows (/6 in.) Shear Strength (psf) or RQD (%)	N-uncorrected	N_{60}	Casing Blows	Elevation (ft.)	Graphic Log	Visual Description and Remarks	Laboratory Testing Results/ AASHTO and Unified Class.
0	1D	24/12	0.00 - 2.00	WOH/WOH/WOH/WOH	---		HSA			Dark brown, moist, very soft, SILT, little fine sand, little clay (Marine Nearshore Deposits). Organics (roots) in top 6" (Marine Nearshore Deposits).	G#267519 A-4, CL-ML WC=98.9%
5	2D	24/17	5.00 - 7.00	2/3/6/5	9	9				Top 10" dark brown, moist, medium stiff, SILT, little clay, trace sand. Some organics (roots) (Marine Nearshore Deposits). Bottom 7": Light blue-gray, moist, silty fine SAND, some clay.	G#267520 A-4, CL-ML WC=35.1%
10	3D	24/14	10.00 - 12.00	8/13/28/22	41	41				Light brown to gray at bottom, wet, dense, fine to coarse SAND, some gravel, some silt, trace clay (Marine Nearshore Deposits).	G#267521 A-2-4, SM WC=12.8%
										Cobbles based on auger behavior.	
								-4.80		13.20 Refusal on auger at 13.2 ft. Possible bedrock at Elev. -4.8' based on auger behavior.	
										Bottom of Exploration at 13.20 feet below ground surface.	
15											
20											
25											

Remarks:

1. MaineDOT provided the surveyed location of the test boring referencing Station and Offset relative to the project baseline. Ground surface elevations are based on the North American Vertical Datum of 1988 (NAVD88).

Stratification lines represent approximate boundaries between soil types; transitions may be gradual.

* Water level readings have been made at times and under conditions stated. Groundwater fluctuations may occur due to conditions other than those present at the time measurements were made.

Page 1 of 1

Boring No.: HB-205.5 TOE 1

Maine Department of Transportation
Soil/Rock Exploration Log
US CUSTOMARY UNITS

Project: Maine Kennebec Bridge #2506		Location: Richmond-Dresden, Maine		Boring No.:	HB-205.5
				WIN:	12674.00
Driller:	Maine Test Borings	Elevation (ft.)	8.3	Auger ID/OD:	4.5"
Operator:	R. Leonard	Datum:	NAVD88	Sampler:	2" Split Spoon
Logged By:	M. Henrick	Rig Type:	Mobile B-53 Track	Hammer Wt./Fall:	140/30 SS
Date Start/Finish:	5/30/12	Drilling Method:	SSA	Core Barrel:	NA
Boring Location:	126+47.8, 3.1 ft Rt.	Casing ID/OD:	NA	Water Level*:	0.5
Hammer Efficiency Factor: 0.6		Hammer Type:	Automatic ☐ Hydraulic ☐ Rope & Cathead ☒		

Definitions:
D = Split Spoon Sample
MD = Unsuccessful Split Spoon Sample attempt
U = Thin Wall Tube Sample
MU = Unsuccessful Thin Wall Tube Sample attempt
V = Insitu Vane Shear Test, PP = Pocket Penetrometer
MV = Unsuccessful Insitu Vane Shear Test attempt
R = Rock Core Sample
SSA = Solid Stem Auger
HSA = Hollow Stem Auger
RC = Roller Cone
WOH = weight of 140lb. hammer
WOR/C = weight of rods or casing
WO1P = Weight of one person
S_u = Insitu Field Vane Shear Strength (psf)
T_v = Pocket Torvane Shear Strength (psf)
q_p = Unconfined Compressive Strength (ksf)
N-uncorrected = Raw field SPT N-value
Hammer Efficiency Factor = Annual Calibration Value
N_{60} = SPT N-uncorrected corrected for hammer efficiency
N_{60} = (Hammer Efficiency Factor/60%)*N-uncorrected
$S_{u(lab)}$ = Lab Vane Shear Strength (psf)
WC = water content, percent
LL = Liquid Limit
PL = Plastic Limit
PI = Plasticity Index
G = Grain Size Analysis
C = Consolidation Test

Depth (ft.)	Sample No.	Pen./Rec. (in.)	Sample Depth (ft.)	Blows (/6 in.) Shear Strength (psf) or RQD (%)	N-uncorrected	N_{60}	Casing Blows	Elevation (ft.)	Graphic Log	Visual Description and Remarks	Laboratory Testing Results/ AASHTO and Unified Class.
0							SSA				
	1D	24/13	1.00 - 3.00	1/WOH/WOH/1	---					Light gray with lenses of dark gray, wet, very loose, SILT, some fine sand, trace clay, trace organics (roots) (Marine Nearshore Deposits).	G#267562 A-4, ML WC=55.8%
	2D	24/20	3.00 - 5.00	WOH/1/7/7	8	8				Light gray, wet, loose, SILT, some fine sand, trace clay (Marine Nearshore Deposits). Decreasing silt with depth.	
5	3D	24/19	5.00 - 7.00	1/3/4/7	7	7				Light blue gray, wet, loose, SILT, little fine sand, trace clay (Marine Nearshore Deposits).	G#267563 A-4, ML WC=23.6%
								0.50		7.80 Refusal on auger at 7.8 ft. Possible bedrock at Elev. 0.5 ft. based on auger behavior.	
										Bottom of Exploration at 7.80 feet below ground surface.	
10											
15											
20											
25											

Remarks:

1. MaineDOT provided the surveyed location of the test boring referencing Station and Offset relative to the project baseline. Ground surface elevations are based on the North American Vertical Datum of 1988 (NAVD88).

Stratification lines represent approximate boundaries between soil types; transitions may be gradual.

* Water level readings have been made at times and under conditions stated. Groundwater fluctuations may occur due to conditions other than those present at the time measurements were made.

Page 1 of 1

Boring No.: HB-205.5

Maine Department of Transportation
Soil/Rock Exploration Log
US CUSTOMARY UNITS

Project: Maine Kennebec Bridge #2506		Location: Richmond-Dresden, Maine		Boring No.:	HB-205.5 TOE 2
				WIN:	12674.00
Driller:	Maine Test Borings	Elevation (ft.)	8.8	Auger ID/OD:	4.5"
Operator:	R. Leonard	Datum:	NAVD88	Sampler:	2" Split Spoon
Logged By:	M. Henrick	Rig Type:	Mobile B-53 Track	Hammer Wt./Fall:	140/30 SS; 300/26 cas'g
Date Start/Finish:	5/31/12	Drilling Method:	SSA/CWB	Core Barrel:	NA
Boring Location:	126+38.4, 51.7 ft Rt.	Casing ID/OD:	HW	Water Level*:	2.1
Hammer Efficiency Factor: 0.6		Hammer Type:	Automatic ☐ Hydraulic ☐ Rope & Cathead ☒		

Definitions:
D = Split Spoon Sample
MD = Unsuccessful Split Spoon Sample attempt
U = Thin Wall Tube Sample
MU = Unsuccessful Thin Wall Tube Sample attempt
V = Insitu Vane Shear Test, PP = Pocket Penetrometer
MV = Unsuccessful Insitu Vane Shear Test attempt
R = Rock Core Sample
SSA = Solid Stem Auger
HSA = Hollow Stem Auger
RC = Roller Cone
WOH = weight of 140lb. hammer
WOR/C = weight of rods or casing
WO1P = Weight of one person
S_u = Insitu Field Vane Shear Strength (psf)
T_v = Pocket Torvane Shear Strength (psf)
q_p = Unconfined Compressive Strength (ksf)
N-uncorrected = Raw field SPT N-value
Hammer Efficiency Factor = Annual Calibration Value
N_{60} = SPT N-uncorrected corrected for hammer efficiency
N_{60} = (Hammer Efficiency Factor/60%)*N-uncorrected
$S_{u(lab)}$ = Lab Vane Shear Strength (psf)
WC = water content, percent
LL = Liquid Limit
PL = Plastic Limit
PI = Plasticity Index
G = Grain Size Analysis
C = Consolidation Test

Depth (ft.)	Sample No.	Pen./Rec. (in.)	Sample Depth (ft.)	Blows (/6 in.) Shear Strength (psf) or RQD (%)	N-uncorrected	N_{60}	Casing Blows	Elevation (ft.)	Graphic Log	Visual Description and Remarks	Laboratory Testing Results/ AASHTO and Unified Class.
0							SSA				
	1D	24/24	1.00 - 3.00	1/WOH/WOH/WOH	---					Light gray-brown, wet, very loose, fine sandy SILT, trace clay (Marine Nearshore Deposits). Lenses of silt and sand 1-3" thick.	
	2D	24/22	3.00 - 5.00	WOH/1/2/8	3	3				Light gray with red-brown mottling, wet, very loose, SILT, little fine sand (Marine Nearshore Deposits). Decreasing silt with depth.	G#267560 A-4, ML WC=26.7%
5	3D	24/15	5.00 - 7.00	4/8/7/8	15	15				Light bluish gray, wet, medium dense, fine SAND, some silt (Marine Nearshore Deposits). Silt lenses in top 3" of spoon.	
	4D	24/14	8.00 - 10.00	WOR/WOR/1/4	1	1				Light gray-brown, wet, very loose, fine SAND, some silt, trace organics (roots) (Marine Nearshore Deposits).	
10	5D	24/17	10.00 - 12.00	4/3/2/12	5	5	OPEN			Set HW casing to 10'. Light gray, wet, loose, SILT, some fine sand (Marine Nearshore Deposits).	G#241674 A-4/ML WC=23.0%
	6D	24/19	12.00 - 14.00	11/20/33/38	53	53		-3.20		12.00 Gray, wet, very dense, fine and coarse SAND, some silt, little gravel (Glacial Till).	
15								-5.90		14.70 Possible Bedrock at Elev. -5.9 ft. based on drill behavior. Roll ahead to 15.2' to confirm.	
								-6.40		15.20 Bottom of Exploration at 15.20 feet below ground surface.	
20											
25											

Remarks:

1. MaineDOT provided the surveyed location of the test boring referencing Station and Offset relative to the project baseline. Ground surface elevations are based on the North American Vertical Datum of 1988 (NAVD88).

Stratification lines represent approximate boundaries between soil types; transitions may be gradual.

* Water level readings have been made at times and under conditions stated. Groundwater fluctuations may occur due to conditions other than those present at the time measurements were made.

Page 1 of 1

Boring No.: HB-205.5 TOE 2

Maine Department of Transportation
Soil/Rock Exploration Log
US CUSTOMARY UNITS

Project: Maine Kennebec Bridge #2506		Location: Richmond-Dresden, Maine		Boring No.:	HB-206 L HSA
				WIN:	12674.00
Driller:	Maine Test Borings	Elevation (ft.)	10.1	Auger ID/OD:	4.5"
Operator:	R. Leonard	Datum:	NAVD88	Sampler:	2" Split Spoon
Logged By:	M. Henrick	Rig Type:	Mobile B-53 Track	Hammer Wt./Fall:	140/30 SS
Date Start/Finish:	5/31/12	Drilling Method:	SSA	Core Barrel:	NA
Boring Location:	127+00.6, 45.4 ft Lt.	Casing ID/OD:	NA	Water Level*:	1.4
Hammer Efficiency Factor: 0.6		Hammer Type:	Automatic ☐ Hydraulic ☐ Rope & Cathead ☒		

Definitions:
D = Split Spoon Sample
MD = Unsuccessful Split Spoon Sample attempt
U = Thin Wall Tube Sample
MU = Unsuccessful Thin Wall Tube Sample attempt
V = Insitu Vane Shear Test, PP = Pocket Penetrometer
MV = Unsuccessful Insitu Vane Shear Test attempt
R = Rock Core Sample
SSA = Solid Stem Auger
HSA = Hollow Stem Auger
RC = Roller Cone
WOH = weight of 140lb. hammer
WOR/C = weight of rods or casing
WO1P = Weight of one person
S_u = Insitu Field Vane Shear Strength (psf)
T_v = Pocket Torvane Shear Strength (psf)
q_p = Unconfined Compressive Strength (ksf)
N-uncorrected = Raw field SPT N-value
Hammer Efficiency Factor = Annual Calibration Value
N_{60} = SPT N-uncorrected corrected for hammer efficiency
N_{60} = (Hammer Efficiency Factor/60%)*N-uncorrected
$S_{u(lab)}$ = Lab Vane Shear Strength (psf)
WC = water content, percent
LL = Liquid Limit
PL = Plastic Limit
PI = Plasticity Index
G = Grain Size Analysis
C = Consolidation Test

Depth (ft.)	Sample No.	Pen./Rec. (in.)	Sample Depth (ft.)	Blows (/6 in.) Shear Strength (psf) or RQD (%)	N-uncorrected	N_{60}	Casing Blows	Elevation (ft.)	Graphic Log	Visual Description and Remarks	Laboratory Testing Results/ AASHTO and Unified Class.
0							SSA				
	1D	24/15	1.00 - 3.00	1/2/4/6	6	6				Light brown with gray mottling, moist, loose, SILT, trace fine sand, trace clay (Marine Nearshore Deposits).	
	2D	22/16	3.00 - 4.83	3/4/5/50(4")	9	9		5.30		Light brown with gray mottling, wet, loose, SILT, trace gravel, trace fine sand, trace clay (Marine Nearshore Deposits). Refusal on spoon at 4.8 ft. Refusal on auger at 4.8 ft. Possible bedrock at Elev. 5.3 ft based on auger behavior.	G#267589 A-4, ML WC=25.0%
										4.80 Bottom of Exploration at 4.80 feet below ground surface.	
5											
10											
15											
20											
25											

Remarks:

1. MaineDOT provided the surveyed location of the test boring referencing Station and Offset relative to the project baseline. Ground surface elevations are based on the North American Vertical Datum of 1988 (NAVD88).

Stratification lines represent approximate boundaries between soil types; transitions may be gradual.

* Water level readings have been made at times and under conditions stated. Groundwater fluctuations may occur due to conditions other than those present at the time measurements were made.

Page 1 of 1

Boring No.: HB-206 L HSA

Maine Department of Transportation
Soil/Rock Exploration Log
US CUSTOMARY UNITS

Project: Maine Kennebec Bridge #2506		Location: Richmond-Dresden, Maine		Boring No.:	HB-206
				WIN:	12674.00
Driller:	Maine Test Borings	Elevation (ft.)	9.2	Auger ID/OD:	4.5"
Operator:	R. Leonard	Datum:	NAVD88	Sampler:	2" Split Spoon
Logged By:	M. Henrick	Rig Type:	Mobile B-53 Track	Hammer Wt./Fall:	140/30 SS
Date Start/Finish:	5/30/12	Drilling Method:	SSA	Core Barrel:	NQ-2
Boring Location:	126+99.8, 8.1 ft Lt.	Casing ID/OD:	HW/NW	Water Level*:	0
Hammer Efficiency Factor: 0.6		Hammer Type:	Automatic ☐ Hydraulic ☐ Rope & Cathead ☒		

Definitions:
D = Split Spoon Sample
MD = Unsuccessful Split Spoon Sample attempt
U = Thin Wall Tube Sample
MU = Unsuccessful Thin Wall Tube Sample attempt
V = Insitu Vane Shear Test, PP = Pocket Penetrometer
MV = Unsuccessful Insitu Vane Shear Test attempt
R = Rock Core Sample
SSA = Solid Stem Auger
HSA = Hollow Stem Auger
RC = Roller Cone
WOH = weight of 140lb. hammer
WOR/C = weight of rods or casing
WO1P = Weight of one person
S_u = Insitu Field Vane Shear Strength (psf)
T_v = Pocket Torvane Shear Strength (psf)
q_p = Unconfined Compressive Strength (ksf)
N-uncorrected = Raw field SPT N-value
Hammer Efficiency Factor = Annual Calibration Value
N_{60} = SPT N-uncorrected corrected for hammer efficiency
N_{60} = (Hammer Efficiency Factor/60%)*N-uncorrected
$S_{u(lab)}$ = Lab Vane Shear Strength (psf)
WC = water content, percent
LL = Liquid Limit
PL = Plastic Limit
PI = Plasticity Index
G = Grain Size Analysis
C = Consolidation Test

Depth (ft.)	Sample No.	Pen./Rec. (in.)	Sample Depth (ft.)	Blows (/6 in.) Shear Strength (psf) or RQD (%)	N-uncorrected	N_{60}	Casing Blows	Elevation (ft.)	Graphic Log	Visual Description and Remarks	Laboratory Testing Results/ AASHTO and Unified Class.
0							SSA				
	1D	18/12	2.00 - 3.50	WOH/1/1/50(0")	2	2		7.20		2.00 Dark gray-brown, wet, very loose, SILT, little fine sand, trace clay, trace organics (roots) (Marine Nearshore Deposits).	G#267559 A-4, ML WC=38.4% Non-Plastic
	R1	60/60	3.50 - 8.50	RQD = 80%			NQ-2	5.70		3.50 Refusal on spoon at 3.5 ft. Begin NQ rock core at 3.5 ft. Top of bedrock at Elev. 5.7 ft. R1: Medium light gray (N6), fine to medium grained, very strong (R5), fresh to moderately weathered, banded/strongly foliated quartz-feldspar-biotite GNEISS [Nuhumkeag Pond Formation]. Discontinuities are close to very close, horizontal to vertical, discordant and concordant to foliation planar to stepped, rough, tight with yellowish orange (10YR 6/6) to dusty brown (5YR 2/2) FeOx and MnOx staining. Moderately fractured zone 8.0 - 8.5 ft. Foliation dips 50 degrees to vertical. Rock Mass Quality = Good R1: Core Times (min:sec) 3.5-4.5': (2:25) 4.5-5.5': (1:35) 5.5-6.5': (1:50) 6.5-7.5': (1:50) 7.5-8.5': (1:35) Recovery = 100%	
5											
								0.70		8.50 Bottom of Exploration at 8.50 feet below ground surface.	
10											
15											
20											
25											

Remarks:

1. MaineDOT provided the surveyed location of the test boring referencing Station and Offset relative to the project baseline. Ground surface elevations are based on the North American Vertical Datum of 1988 (NAVD88).

Stratification lines represent approximate boundaries between soil types; transitions may be gradual.

* Water level readings have been made at times and under conditions stated. Groundwater fluctuations may occur due to conditions other than those present at the time measurements were made.

Page 1 of 1

Boring No.: HB-206

Maine Department of Transportation
Soil/Rock Exploration Log
US CUSTOMARY UNITS

Project: Maine Kennebec Bridge #2506		Location: Richmond-Dresden, Maine		Boring No.:	HB-206 R HSA
				WIN:	12674.00
Driller:	Maine Test Borings	Elevation (ft.)	17.6	Auger ID/OD:	4.5"
Operator:	R. Leonard	Datum:	NAVD88	Sampler:	2" Split Spoon
Logged By:	M. Henrick	Rig Type:	Mobile B-53 Track	Hammer Wt./Fall:	140/30 SS
Date Start/Finish:	5/31/12	Drilling Method:	SSA	Core Barrel:	NA
Boring Location:	127+02.3, 40.8 ft Rt.	Casing ID/OD:	NA	Water Level*:	1.5
Hammer Efficiency Factor: 0.6		Hammer Type:	Automatic ☐ Hydraulic ☐ Rope & Cathead ☒		

Definitions:
D = Split Spoon Sample
MD = Unsuccessful Split Spoon Sample attempt
U = Thin Wall Tube Sample
MU = Unsuccessful Thin Wall Tube Sample attempt
V = Insitu Vane Shear Test, PP = Pocket Penetrometer
MV = Unsuccessful Insitu Vane Shear Test attempt
R = Rock Core Sample
SSA = Solid Stem Auger
HSA = Hollow Stem Auger
RC = Roller Cone
WOH = weight of 140lb. hammer
WOR/C = weight of rods or casing
WO1P = Weight of one person
S_u = Insitu Field Vane Shear Strength (psf)
T_v = Pocket Torvane Shear Strength (psf)
q_p = Unconfined Compressive Strength (ksf)
N-uncorrected = Raw field SPT N-value
Hammer Efficiency Factor = Annual Calibration Value
N_{60} = SPT N-uncorrected corrected for hammer efficiency
N_{60} = (Hammer Efficiency Factor/60%)*N-uncorrected
$S_{u(lab)}$ = Lab Vane Shear Strength (psf)
WC = water content, percent
LL = Liquid Limit
PL = Plastic Limit
PI = Plasticity Index
G = Grain Size Analysis
C = Consolidation Test

Depth (ft.)	Sample No.	Pen./Rec. (in.)	Sample Depth (ft.)	Blows (/6 in.) Shear Strength (psf) or RQD (%)	N-uncorrected	N_{60}	Casing Blows	Elevation (ft.)	Graphic Log	Visual Description and Remarks	Laboratory Testing Results/ AASHTO and Unified Class.
0							SSA				
	1D	24/17	1.00 - 3.00	1/1/WOH/4	1	1				Light brown, damp, very loose, SILT, some fine sand, little clay, trace gravel, trace clay, trace organics (roots) (Marine Nearshore Deposits).	G#267588 A-4, ML WC=42.5%
	2D	24/16	3.00 - 5.00	5/6/7/9	13	13				Light brown with gray mottling, wet, medium dense, fine SAND, some silt, trace organics (roots) (Marine Nearshore Deposits).	
5	3D	7/7	5.00 - 5.58	5/50(1")	---			12.00 11.80		Light brown, wet, fine SAND, some silt (Marine Nearshore Deposits).	
										5.60 Refusal on spoon at 5.6 ft. Refusal on auger at 5.8 ft. Possible bedrock at Elev. 12.0 ft. based on auger behavior.	
										5.80 Bottom of Exploration at 5.80 feet below ground surface.	
10											
15											
20											
25											

Remarks:

1. MaineDOT provided the surveyed location of the test boring referencing Station and Offset relative to the project baseline. Ground surface elevations are based on the North American Vertical Datum of 1988 (NAVD88).

Stratification lines represent approximate boundaries between soil types; transitions may be gradual.

* Water level readings have been made at times and under conditions stated. Groundwater fluctuations may occur due to conditions other than those present at the time measurements were made.

Page 1 of 1

Boring No.: HB-206 R HSA

STATE OF MAINE
DEPARTMENT OF TRANSPORTATION

AC-BH-1267(400)

BRIDGE NO. 2506

WIN
12674.00

BRIDGE PLANS

		BY	DATE
PROJ. MANAGER	N. Benoit		
DESIGN-DETAILED	Team South	Team South	April 2012
CHECKED-REVIEWED	-----	-----	-----
DESIGN2-DETAILED2	K.BRESKIN	T.WHITE	JAN 2013
DESIGN3-DETAILED3	-----	-----	-----
REVISIONS 1	-----	-----	-----
REVISIONS 2	-----	-----	-----
REVISIONS 3	-----	-----	-----
REVISIONS 4	-----	-----	-----
FIELD CHANGES	-----	-----	-----

SIGNATURE

P.E. NUMBER

DATE

MAINE KENNEBEC BRIDGE
KENNEBEC RIVER
RICHMOND-DRESDEN SAGADAHOC-LINCOLN CTYS.

BORING LOGS

Filename: ...\MSTA\022_BORING LOGS3 APRO.dgn Division: BRIDGE Username: dana.damren Date:3/27/2013

Maine Department of Transportation
Soil/Rock Exploration Log
US CUSTOMARY UNITS

Project: Maine Kennebec Bridge #2506		Location: Richmond-Dresden, Maine		Boring No.: HB-207	WIN: 12674.00
Driller:	Maine Test Borings	Elevation (ft.)	25.8	Auger ID/OD:	4.5"
Operator:	R. Leonard	Datum:	NAVD88	Sampler:	2" Split Spoon
Logged By:	M. Henrick	Rig Type:	Mobile B-53 Track	Hammer Wt./Fall:	140/30 SS
Date Start/Finish:	5/30/12	Drilling Method:	SSA/CWB	Core Barrel:	NQ-2
Boring Location:	128+56.9, 2.4 ft Rt.	Casing ID/OD:	HW/NW	Water Level*:	4.3
Hammer Efficiency Factor: 0.6		Hammer Type:	Automatic ☐ Hydraulic ☐ Rope & Cathead ☒		

Definitions:
D = Split Spoon Sample
MD = Unsuccessful Split Spoon Sample attempt
U = Thin Wall Tube Sample
MU = Unsuccessful Thin Wall Tube Sample attempt
V = Insitu Vane Shear Test, PP = Pocket Penetrometer
MV = Unsuccessful Insitu Vane Shear Test attempt
R = Rock Core Sample
SSA = Solid Stem Auger
HSA = Hollow Stem Auger
RC = Roller Cone
WOH = weight of 140lb. hammer
WOR/C = weight of rods or casing
WO1P = Weight of one person
S_u = Insitu Field Vane Shear Strength (psf)
T_v = Pocket Torvane Shear Strength (psf)
q_p = Unconfined Compressive Strength (ksf)
N-uncorrected = Raw field SPT N-value
Hammer Efficiency Factor = Annual Calibration Value
N_{60} = SPT N-uncorrected corrected for hammer efficiency
N_{60} = (Hammer Efficiency Factor/60%)*N-uncorrected
$S_{u(lab)}$ = Lab Vane Shear Strength (psf)
WC = water content, percent
LL = Liquid Limit
PL = Plastic Limit
PI = Plasticity Index
G = Grain Size Analysis
C = Consolidation Test

Sample No.	Pen./Rec. (in.)	Sample Depth (ft.)	Blows (/6 in.) Shear Strength (psf) or RQD (%)	N-uncorrected	N60	Casing Blows	Elevation (ft.)	Laboratory Testing Results/AASHTO and Unified Class
						SSA		
1D	24/16	1.00 - 3.00	3/5/5/7	10	10			G#267590 A-4, ML WC=21.7%
2D	24/23	3.00 - 5.00	5/5/6/7	11	11			
3D	24/19	5.00 - 7.00	2/5/3/3	8	8	Open		G#241675 A-4/ML WC=23.1%
4D	24/14	7.00 - 9.00	3/3/5/4	8	8			
5D	23/15	10.00 - 11.92	3/19/11/50(5")	30	30		13.90	
R1	58/58	12.10 - 16.93	RQD = 98%			NQ	8.90	

Visual Description and Remarks:

Light brown with trace of gray mottling, damp, loose, SILT, some fine sand, trace gravel, trace organics (roots) (Marine Nearshore Deposits).

Light brown with gray and dark brown mottling, damp, medium dense, fine Sandy SILT, trace clay (Marine Nearshore Deposits). Decreasing silt with depth.

Light brown-gray with rusty brown staining, wet, loose, fine Sandy SILT, trace clay (Marine Nearshore Deposits). Lenses of silt present.

Light reddish brown, wet, loose, Silty fine SAND, little silt (Marine Nearshore Deposits).

Light brown, wet, medium-dense, fine SAND, some silt, little gravel (Marine Nearshore Deposits). Blue gray at bottom 2". — 11.90

Refusal on spoon at 11.9 ft.
Advance roller bit to 12.1 ft.
Top of bedrock at Elev. 13.9 ft.
R1: Medium gray (N5) to light gray (N7), very fine to fine grained, very strong (R5), fresh to moderately weathered, banded/strongly foliated, quartz-feldspar-biotite GNEISS [Nuhumkeag Pond Formation].
Discontinuities are close to moderately close, horizontal to low angle, planar, very rough, tight, discordant to foliation. Steeply dipping quartz vein 16.4-16.7 ft. Foliation dips 60-70 degrees to vertical.
Rock Mass Quality = Excellent
R1: Core Times (min:sec)
12.1-13.1': (2:30)
13.1-14.1': (2:30)
14.1-15.1': (2:40)
15.1-16.1': (2:25)
16.1-16.9': (2:00) Recovery = 100% — 16.90

Bottom of Exploration at 16.90 feet below ground surface.

Remarks:
1. MaineDOT provided the surveyed location of the test boring referencing Station and Offset relative to the project baseline. Ground surface elevations are based on the North American Vertical Datum of 1988 (NAVD88).

Stratification lines represent approximate boundaries between soil types; transitions may be gradual.
* Water level readings have been made at times and under conditions stated. Groundwater fluctuations may occur due to conditions other than those present at the time measurements were made.

Page 1 of 1 — Boring No.: HB-207

Maine Department of Transportation
Soil/Rock Exploration Log
US CUSTOMARY UNITS

Project: Maine Kennebec Bridge #2506		Location: Richmond-Dresden, Maine		Boring No.: HB-208	WIN: 12674.00
Driller:	Maine Test Borings	Elevation (ft.)	39.0	Auger ID/OD:	4.5" SSA/ 2.5" HSA
Operator:	R. Leonard	Datum:	NAVD88	Sampler:	2" Split Spoon
Logged By:	N. Chinburg	Rig Type:	Mobile B-53 Truck	Hammer Wt./Fall:	140/30 SS
Date Start/Finish:	6/5/12	Drilling Method:	SSA/HSA	Core Barrel:	NA
Boring Location:	130+50.5, 5.8 ft Rt.	Casing ID/OD:	NA	Water Level*:	0
Hammer Efficiency Factor: 0.6		Hammer Type:	Automatic ☐ Hydraulic ☐ Rope & Cathead ☒		

(Definitions as above.)

Sample No.	Pen./Rec. (in.)	Sample Depth (ft.)	Blows (/6 in.) Shear Strength (psf) or RQD (%)	N-uncorrected	N60	Casing Blows	Elevation (ft.)	Laboratory Testing Results/AASHTO and Unified Class
		0.00 - 0.83				SSA	38.20	
1D	24/8	1.51 - 3.51	9/7/3/3	10	10		37.50	
2D	24/18	3.00 - 5.00	3/3/7/9	10	10			G#267599 A-4, SC-SM WC=27.4%
3D	24/24	5.00 - 7.00	5/5/6/7	11	11	HSA		G#267568 A-6, CL LL=38, PL=20 PI=18 WC=27.0%
4D MV1	24/24	7.00 - 9.00 / 7.10 - 7.21	2/3/4/3 Su >4181 psf	7	7			
5D V2	24/24	9.00 - 11.00 / 9.10 - 9.21	2/2/3/5 Su= 4008/786 psf	5	5			G#267571 A-4, ML WC=26.1%
6D	24/18	11.00 - 13.00	1/2/9/10	11	11		26.00	

Visual Description and Remarks:

New asphalt 0-0.5'. Weathered asphalt 0.5-0.8'. — 0.80
Dark brown sandy gravel 0.8-1.0'.
Top 6": Dark brown, moist, loose, medium to coarse SAND, some gravel, little silt (Roadbase). — 1.50
Bottom 2": Gray, moist, medium stiff, SILT, some clay (Marine Nearshore Deposits).
Top 8": Brown-gray, moist, medium stiff, SILT with some clay (Marine Nearshore Deposits).
Bottom 10": Light brown-gray, moist, medium-dense, Silty fine SAND, trace gravel (Marine Nearshore Deposits).
Layered light and dark gray, moist, stiff, Silty CLAY, trace fine sand, 1/16" lenses of fine sand (Marine Nearshore Deposits).
PP q_p = 3800, 4200 psf
T_v = 905, 515 psf
Layered light and dark gray, moist, medium stiff, Clayey SILT, 1/16" lenses of fine sand (Marine Nearshore Deposits).
PP q_p = 3400, 2800 psf
T_v = 780, 1540 psf
MV1: >26.6 in-lb with 16x32 mm vane at 7.1'.
Top 18": Light gray-brown, wet, medium stiff, SILT, some fine sand, little clay, trace gravel (Marine Nearshore Deposits). Fine sand in 1/16" to 1" lenses.
Bottom 6": Light brown, wet, loose, fine SAND, some silt, trace clay (Marine Nearshore Deposits).
16x32 mm vane raw torque readings:
V2: 25.5/5.0 in-lbs.
Top 12": Light brown, wet, medium dense, SILT, some fine sand, trace gravel, trace clay (Marine Nearshore Deposits).
Bottom 6": Light brown, moist, medium dense, fine SAND, trace silt (Marine Nearshore Deposits).
End of boring at 13 ft. per MaineDOT requirements. — 13.00

Bottom of Exploration at 13.00 feet below ground surface.

Remarks:
1. MaineDOT provided the surveyed location of the test boring referencing Station and Offset relative to the project baseline. Ground surface elevations are based on the North American Vertical Datum of 1988 (NAVD88).
2. PP q_p = Pocket Penetrometer, unconfined compressive strength = $2s_u$.

Stratification lines represent approximate boundaries between soil types; transitions may be gradual.
* Water level readings have been made at times and under conditions stated. Groundwater fluctuations may occur due to conditions other than those present at the time measurements were made.

Page 1 of 1 — Boring No.: HB-208

Maine Department of Transportation
Soil/Rock Exploration Log
US CUSTOMARY UNITS

Project: Maine Kennebec Bridge #2506		Location: Richmond-Dresden, Maine		Boring No.: HB-209	WIN: 12674.00
Driller:	Maine Test Borings	Elevation (ft.)	19.3	Auger ID/OD:	4.5"
Operator:	R. Leonard	Datum:	NAVD88	Sampler:	2" Split Spoon
Logged By:	M. Henrick	Rig Type:	Mobile B-53 Track	Hammer Wt./Fall:	140/30 SS
Date Start/Finish:	5/29/12	Drilling Method:	SSA	Core Barrel:	NA
Boring Location:	11+44, 8.9 ft Rt.	Casing ID/OD:	NA	Water Level*:	6.1
Hammer Efficiency Factor: 0.6		Hammer Type:	Automatic ☐ Hydraulic ☐ Rope & Cathead ☒		

(Definitions as above.)

Sample No.	Pen./Rec. (in.)	Sample Depth (ft.)	Blows (/6 in.) Shear Strength (psf) or RQD (%)	N-uncorrected	N60	Casing Blows	Elevation (ft.)	Laboratory Testing Results/AASHTO and Unified Class
						SSA		
1D	24/17	1.00 - 3.00	1/WOH/3/5	3	3			G#267570 A-4, ML Non-Plastic WC=22.6% Org. Cont.= 3.2%
2D	24/19	3.00 - 5.00	3/4/5/7	9	9			
3D	24/18	5.00 - 7.00	15/19/18/22	37	37			G#267592 A-2-4, SM WC=10.0%
4D	11/8	8.00 - 8.92	9/50(5")	---			10.40 / 10.30	

Visual Description and Remarks:

Gray, silty sand at surface.

Light gray, wet, very loose SILT, some fine sand, trace clay, trace organics (roots) (Marine Nearshore Deposits). 3" thick silt lense at 1.5'.

Light gray with brown mottling, wet, loose, fine Silty SAND (Marine Nearshore Deposits). Silt lenses present.

Light brown-gray with red-gray mottling, blue gray in tip, wet, dense, fine to coarse SAND, some gravel, some silt (Marine Nearshore Deposits).

Gravel 7-7.5' based on auger behavior.

Light gray-blue, wet, fine to coarse SAND, some silt, trace gravel (Marine Nearshore Deposits). — 8.90

Refusal on spoon at 8.9 ft.
Refusal on auger at 9.0 ft.
Possible bedrock at Elev. 10.4 ft. based on auger behavior.
Moved rig 5' Northeast and probed to auger refusal at 9.1 ft. — 9.00

Bottom of Exploration at 9.00 feet below ground surface.

Remarks:
1. MaineDOT provided the surveyed location of the test boring referencing Station and Offset relative to the project baseline. Ground surface elevations are based on the North American Vertical Datum of 1988 (NAVD88).

Stratification lines represent approximate boundaries between soil types; transitions may be gradual.
* Water level readings have been made at times and under conditions stated. Groundwater fluctuations may occur due to conditions other than those present at the time measurements were made.

Page 1 of 1 — Boring No.: HB-209

Maine Department of Transportation
Soil/Rock Exploration Log
US CUSTOMARY UNITS

Project: Maine Kennebec Bridge #2506		Location: Richmond-Dresden, Maine		Boring No.: HB-210	WIN: 12674.00
Driller:	Maine Test Borings	Elevation (ft.)	16.3	Auger ID/OD:	4.5"
Operator:	R. Leonard	Datum:	NAVD88	Sampler:	2" Split Spoon
Logged By:	M. Henrick	Rig Type:	Mobile B-53 Track	Hammer Wt./Fall:	140/30 SS
Date Start/Finish:	5/29/12	Drilling Method:	SSA	Core Barrel:	NA
Boring Location:	12+82.6, 3.5 ft Lt.	Casing ID/OD:	NA	Water Level*:	Dry
Hammer Efficiency Factor: 0.6		Hammer Type:	Automatic ☐ Hydraulic ☐ Rope & Cathead ☒		

(Definitions as above.)

Sample No.	Pen./Rec. (in.)	Sample Depth (ft.)	Blows (/6 in.) Shear Strength (psf) or RQD (%)	N-uncorrected	N60	Casing Blows	Elevation (ft.)	Laboratory Testing Results/AASHTO and Unified Class
						SSA		
1D	21/15	1.00 - 2.75	4/5/3/50(3")	8	8		14.55 / 13.30	

Visual Description and Remarks:

Cobbles, sand, and gravel at surface.

Top 9": Light brown, loose, medium to coarse SAND, little gravel, trace silt (Fill). — 1.75
Bottom 6": Gray, damp, loose, silty fine SAND (Marine Nearshore Deposits).
Refusal on spoon at 2.8 ft.
Refusal on auger at 3.0 ft.
Possible bedrock at Elev. 13.3 ft based on auger behavior.
Hand auger refusal at 2.8 ft approximately 15 ft North. — 3.00

Bottom of Exploration at 3.00 feet below ground surface.

Remarks:
1. MaineDOT provided the surveyed location of the test boring referencing Station and Offset relative to the project baseline. Ground surface elevations are based on the North American Vertical Datum of 1988 (NAVD88).

Stratification lines represent approximate boundaries between soil types; transitions may be gradual.
* Water level readings have been made at times and under conditions stated. Groundwater fluctuations may occur due to conditions other than those present at the time measurements were made.

Page 1 of 1 — Boring No.: HB-210

Maine Department of Transportation
Soil/Rock Exploration Log
US CUSTOMARY UNITS

Project: Maine Kennebec Bridge #2506		Location: Richmond-Dresden, Maine		Boring No.: HB-211	WIN: 12674.00
Driller:	Maine Test Borings	Elevation (ft.)	9.4	Auger ID/OD:	4.5"
Operator:	R. Leonard	Datum:	NAVD88	Sampler:	2" Split Spoon
Logged By:	M. Henrick	Rig Type:	Mobile B-53 Track	Hammer Wt./Fall:	140/30 SS
Date Start/Finish:	5/29/12	Drilling Method:	SSA	Core Barrel:	NA
Boring Location:	15+06.7, 10.8 ft Rt.	Casing ID/OD:	NA	Water Level*:	4.1
Hammer Efficiency Factor: 0.6		Hammer Type:	Automatic ☐ Hydraulic ☐ Rope & Cathead ☒		

(Definitions as above.)

Sample No.	Pen./Rec. (in.)	Sample Depth (ft.)	Blows (/6 in.) Shear Strength (psf) or RQD (%)	N-uncorrected	N60	Casing Blows	Elevation (ft.)	Laboratory Testing Results/AASHTO and Unified Class
						SSA		
1D	24/24	1.00 - 3.00	1/2/1/2	3	3		7.80	
2D	24/24	3.00 - 5.00	WOH/2/1/2	3	3			G#267569 A-4, ML WC=42.8%
3D	24/24	5.00 - 7.00	WOH/1/WOH/WOH	1	1			G#267572 A-4, ML WC=44.1% Non-Plastic
4D MV1	24/24	7.00 - 9.00 / 7.00 - 7.17	5/12/9/8 Would not push	21	21			
5D	5/5	10.00 - 10.42	50(5")	---			-1.30	

Visual Description and Remarks:

Gravelly sand 0-1 ft.

Top 8": Dark brown, very loose, moist, medium to coarse SAND, little silt (FILL). — 1.60
Bottom 16": Light brown, very loose, moist, SILT, trace fine sand (Marine Nearshore Deposits).
Light brown-gray, wet, very loose, SILT, little clay, trace fine sand (Marine Nearshore Deposits).

Top 10": Light brown-gray, wet, very loose, SILT, some fine sand, trace clay (Marine Nearshore Deposits).
Bottom 14": Gray, wet, very soft, SILT, little clay, little fine sand (Marine Nearshore Deposits).

Top 6": Gray, wet, very soft, SILT, some clay, little fine sand (Marine Nearshore Deposits).
Bottom 18": Gray, wet, medium dense, fine to medium SAND, little silt (Marine Nearshore Deposits).
MV1: Failed vane attempt. Would not push past 7.2'.

Gray, wet, fine to medium SAND, little silt (Marine Nearshore Deposits).
Refusal on spoon at 10.4 ft.
Refusal on auger at 10.7 ft.
Possible bedrock at Elev. -1.3 ft based on auger behavior. — 10.70

Bottom of Exploration at 10.70 feet below ground surface.

Remarks:
1. MaineDOT provided the surveyed location of the test boring referencing Station and Offset relative to the project baseline. Ground surface elevations are based on the North American Vertical Datum of 1988 (NAVD88).

Stratification lines represent approximate boundaries between soil types; transitions may be gradual.
* Water level readings have been made at times and under conditions stated. Groundwater fluctuations may occur due to conditions other than those present at the time measurements were made.

Page 1 of 1 — Boring No.: HB-211

STATE OF MAINE
DEPARTMENT OF TRANSPORTATION
AC-BH-1267(400)
BRIDGE NO. 2506
WIN 12674.00
BRIDGE PLANS

	BY	DATE
PROJ. MANAGER	N. Benoit	
DESIGN-DETAILED	Team South	Team South	April 2012
CHECKED-REVIEWED	-----	-----	-----
DESIGN2-DETAILED2	K.BRESKIN	T.WHITE	JAN 2013
DESIGN3-DETAILED3			
REVISIONS 1			
REVISIONS 2			
REVISIONS 3			
REVISIONS 4			
FIELD CHANGES			

SIGNATURE
P.E. NUMBER
DATE

MAINE KENNEBEC BRIDGE
KENNEBEC RIVER
RICHMOND-DRESDEN SAGADAHOC-LINCOLN CTYS.

BORING LOGS

SHEET NUMBER
22
OF 238

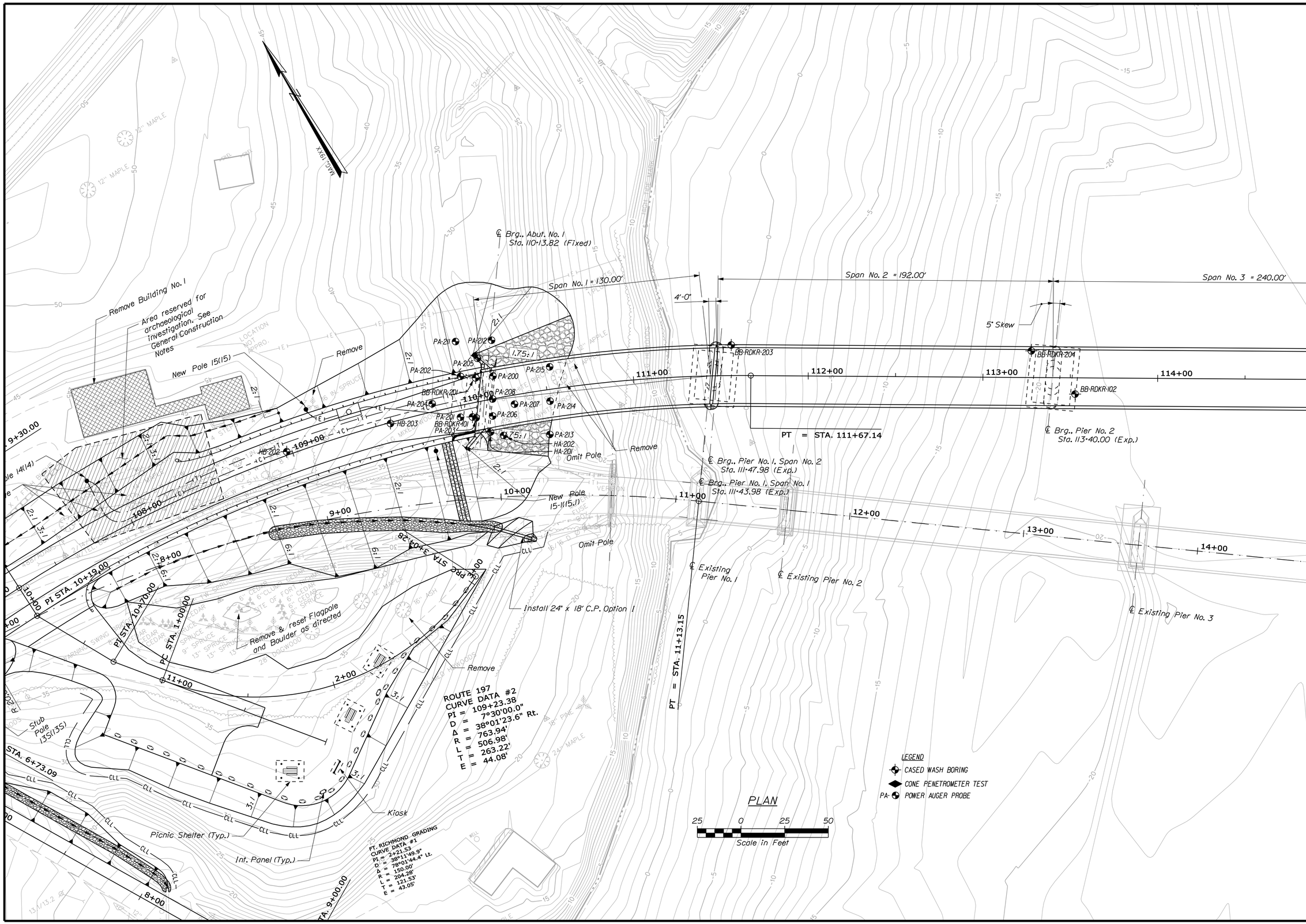

STATE OF MAINE
DEPARTMENT OF TRANSPORTATION

AC-BH-1267(400)

WIN 12674.00

BRIDGE NO. 2506

BRIDGE PLANS

		BY	DATE
PROJ. MANAGER	N. Benoit		
DESIGN-DETAILED	Team South	Team South	April 2012
CHECKED-REVIEWED	------	------	------
DESIGN2-DETAILED2	L. KRUSINSKI	T. WHITE	APR 2012
DESIGN3-DETAILED3	------	------	------
REVISIONS 1	------	------	------
REVISIONS 2	------	------	------
REVISIONS 3	------	------	------
REVISIONS 4	------	------	------
FIELD CHANGES	------	------	------

SIGNATURE

P.E. NUMBER

DATE

MAINE KENNEBEC BRIDGE
KENNEBEC RIVER
RICHMOND-DRESDEN SAGADAHOC-LINCOLN CTYS.

BORING LOCATION PLAN

SHEET NUMBER

23

OF 238

Filename: ...\00\GEOTECH\MSTA\023_BLP1.dgn Division: BRIDGE Username: dana.damren Date:4/10/2013

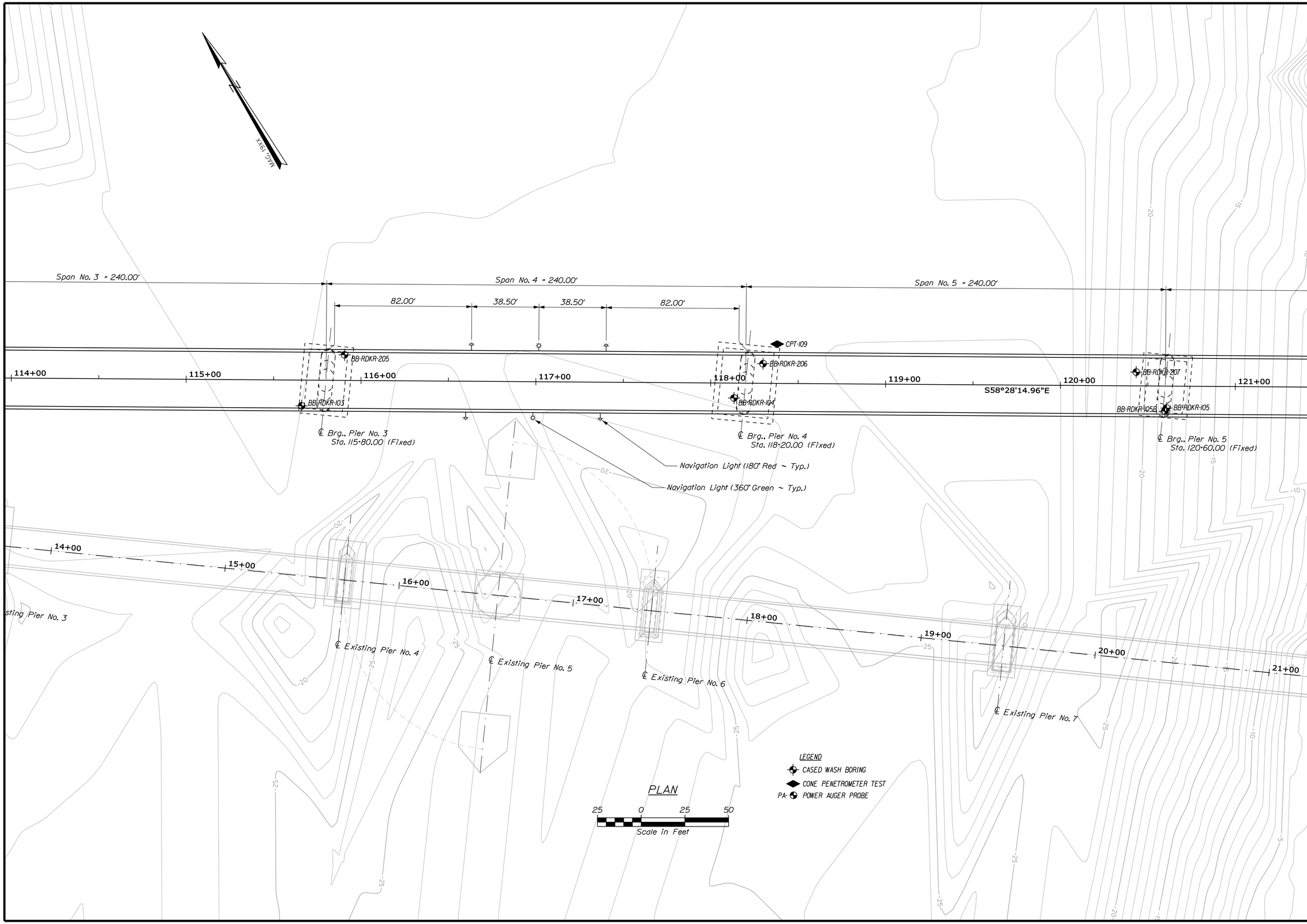

STATE OF MAINE
DEPARTMENT OF TRANSPORTATION

AC-BH-1267(400)

WIN 12674.00

BRIDGE NO. 2506

BRIDGE PLANS

PROJ. MANAGER	N. Benoit	BY	DATE	
DESIGN-DETAILED	Team South	Team South	April 2012	SIGNATURE
CHECKED-REVIEWED	------	------	APR 2012	P.E. NUMBER
DESIGN2-DETAILED2	L.KRUSINSKI	T.WHITE	------	
DESIGN3-DETAILED3	------	------	------	DATE
REVISIONS 1	------	------	------	
REVISIONS 2	------	------	------	
REVISIONS 3	------	------	------	
REVISIONS 4	------	------	------	
FIELD CHANGES	------	------	------	

MAINE KENNEBEC BRIDGE
KENNEBEC RIVER
RICHMOND-DRESDEN SAGADAHOC-LINCOLN CTYS.

BORING LOCATION PLAN

SHEET NUMBER
24
OF 238

Filename: ...\00\GEOTECH\MSTA\024_BLP2.dgn Division: BRIDGE Username: dana.damren Date:4/10/2013

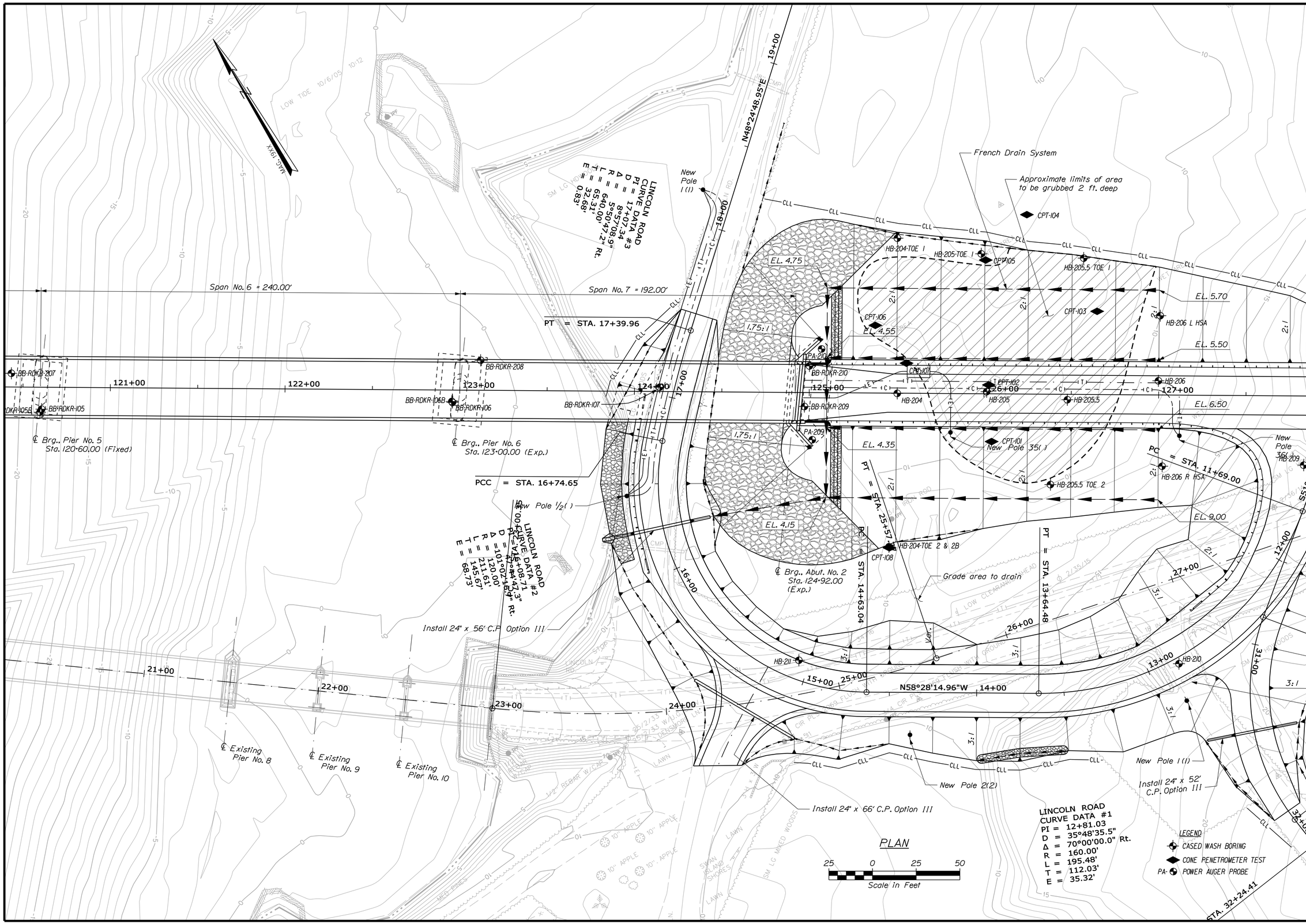

STATE OF MAINE
DEPARTMENT OF TRANSPORTATION

AC-BH-1267(400)

WIN 12674.00

BRIDGE NO. 2506

BRIDGE PLANS

	BY	DATE
PROJ. MANAGER	N. Benoit	
DESIGN-DETAILED	Team South	April 2012
CHECKED-REVIEWED	-----	-----
DESIGN2-DETAILED2	L. KRUSINSKI	T. WHITE
DESIGN3-DETAILED3	-----	APR 2012
REVISIONS 1	-----	-----
REVISIONS 2	-----	-----
REVISIONS 3	-----	-----
REVISIONS 4	-----	-----
FIELD CHANGES	-----	-----

SIGNATURE

P.E. NUMBER

DATE

MAINE KENNEBEC BRIDGE
KENNEBEC RIVER
RICHMOND-DRESDEN SAGADAHOC-LINCOLN CTYS.

BORING LOCATION PLAN

SHEET NUMBER

25

OF 238

Filename: ...\00\GEOTECH\MSTA\025_BLP3.dgn Division: BRIDGE Username: dana.damren Date:4/10/2013

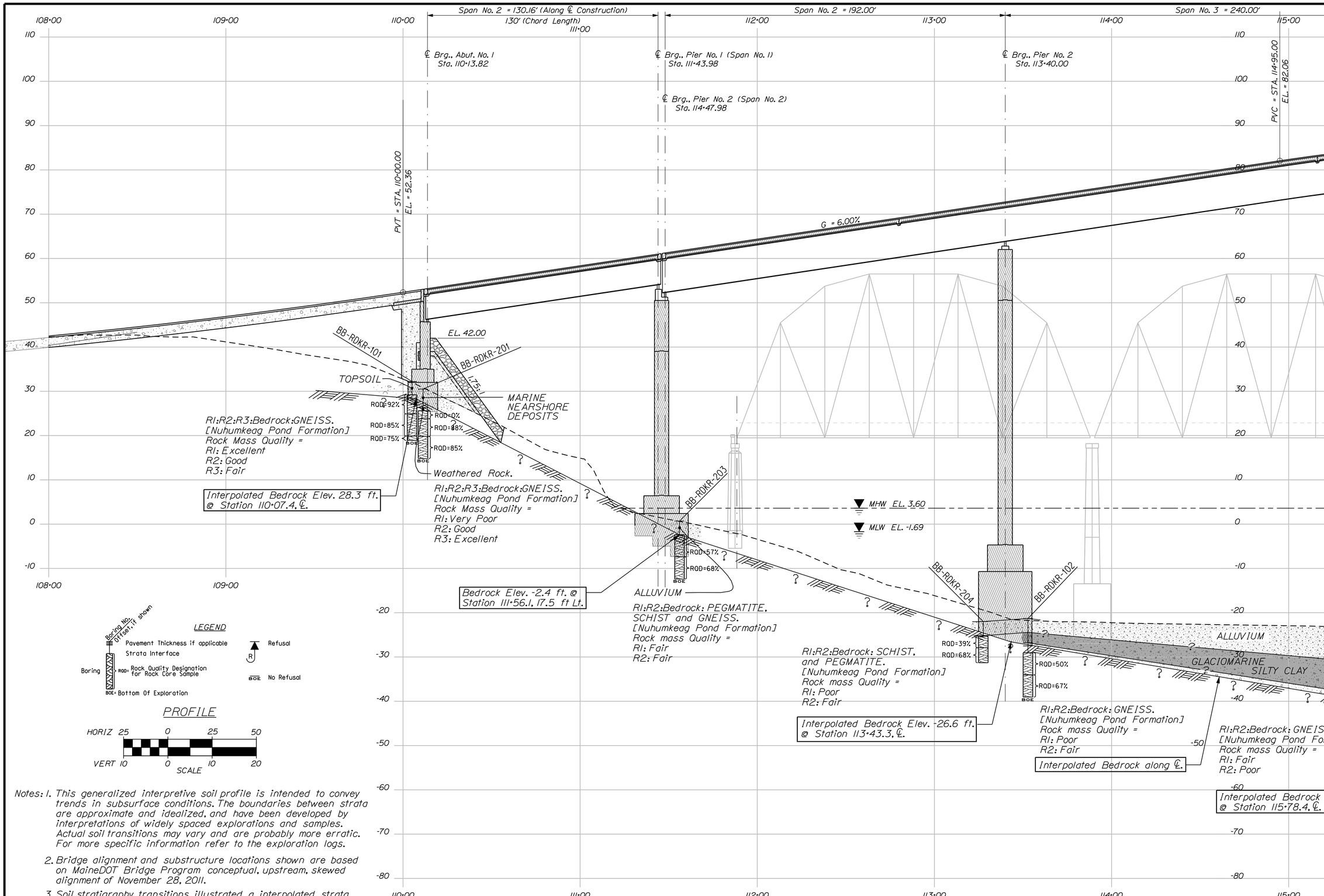

Notes: 1. This generalized interpretive soil profile is intended to convey trends in subsurface conditions. The boundaries between strata are approximate and idealized, and have been developed by interpretations of widely spaced explorations and samples. Actual soil transitions may vary and are probably more erratic. For more specific information refer to the exploration logs.

2. Bridge alignment and substructure locations shown are based on MaineDOT Bridge Program conceptual, upstream, skewed alignment of November 28, 2011.

3. Soil stratigraphy transitions illustrated a interpolated strata changes interpolated at bridge Centerline.

STATE OF MAINE
DEPARTMENT OF TRANSPORTATION

AC-BH-1267(400)

WIN 12674.00

BRIDGE NO. 2506

BRIDGE PLANS

		BY	DATE
PROJ. MANAGER	N. Benoit		
DESIGN-DETAILED	Team South	Team South	April 2012
CHECKED-REVIEWED	-----	-----	-----
DESIGN2-DETAILED2	L. KRUSINSKI	T. WHITE	APR 2012
DESIGN3-DETAILED3	-----	-----	-----
REVISIONS 1	-----	-----	-----
REVISIONS 2	-----	-----	-----
REVISIONS 3	-----	-----	-----
REVISIONS 4	-----	-----	-----
FIELD CHANGES	-----	-----	-----

SIGNATURE

P.E. NUMBER

DATE

MAINE KENNEBEC BRIDGE
KENNEBEC RIVER
RICHMOND-DRESDEN SAGADAHOC-LINCOLN CTYS.

INTERPRETIVE SUBSURFACE PROFILE

SHEET NUMBER

26

OF 238

Filename: ...\00\GEOTECH\MSTA\026_ISP1.dgn Division: BRIDGE Username: dana.damren Date:3/27/2013

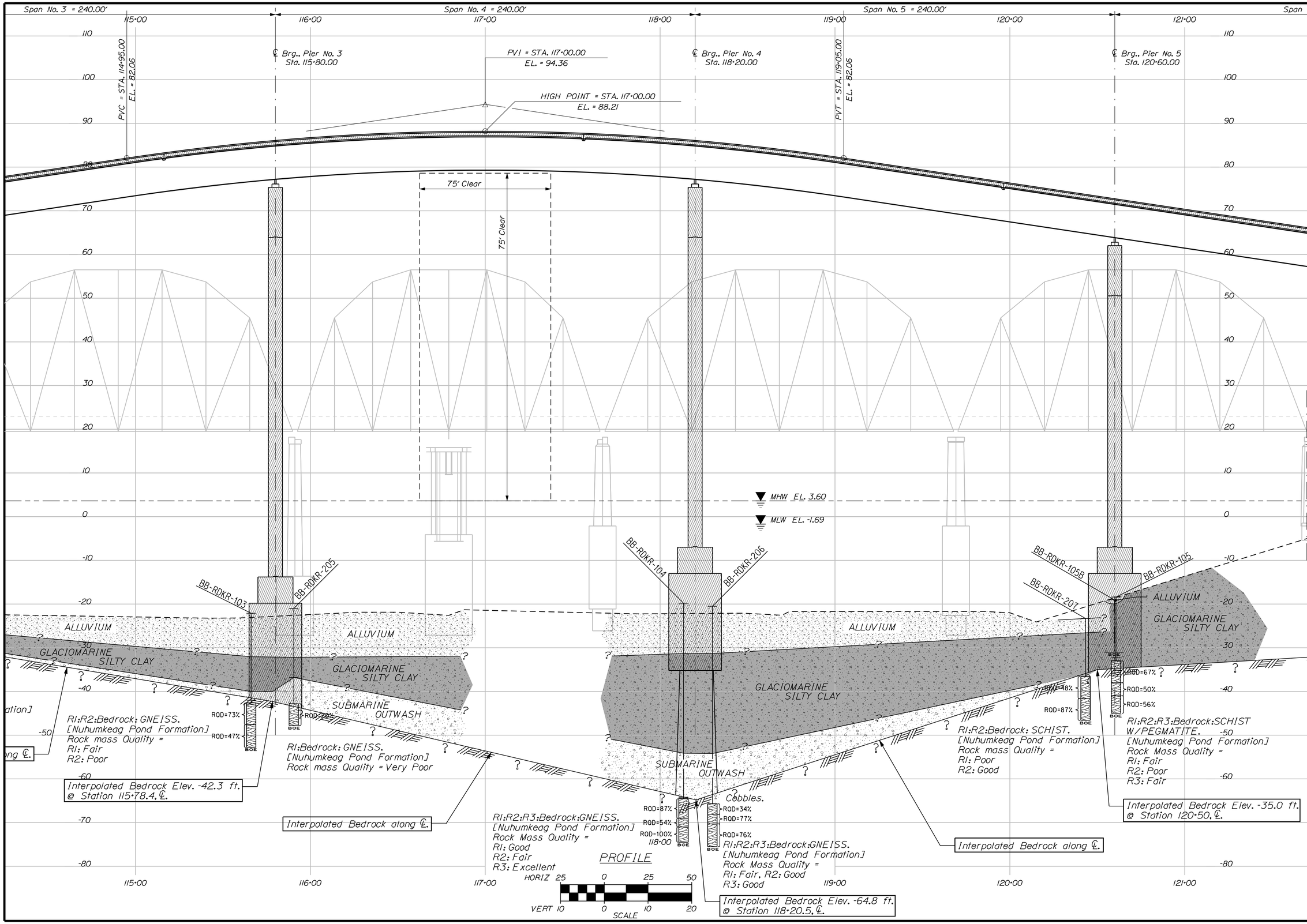

STATE OF MAINE
DEPARTMENT OF TRANSPORTATION

AC-BH-1267(400)

WIN 12674.00

BRIDGE NO. 2506

BRIDGE PLANS

		BY	DATE
PROJ. MANAGER	N. Benoit		
DESIGN-DETAILED	Team South	Team South	April 2012
CHECKED-REVIEWED	-----	-----	-----
DESIGN2-DETAILED2	L.KRUSINSKI	T.WHITE	APR 2012
DESIGN3-DETAILED3	------	------	------
REVISIONS 1	------		
REVISIONS 2	------		
REVISIONS 3	------		
REVISIONS 4	------		
FIELD CHANGES	------		

SIGNATURE

P.E. NUMBER

DATE

MAINE KENNEBEC BRIDGE
KENNEBEC RIVER
RICHMOND-DRESDEN SAGADAHOC-LINCOLN CTYS.

INTERPRETIVE SUBSURFACE PROFILE

SHEET NUMBER

27

OF 238

Filename: ...\00\GEOTECH\MSTA\027_ISP2.dgn Division: BRIDGE Username: dana.damren Date:3/27/2013

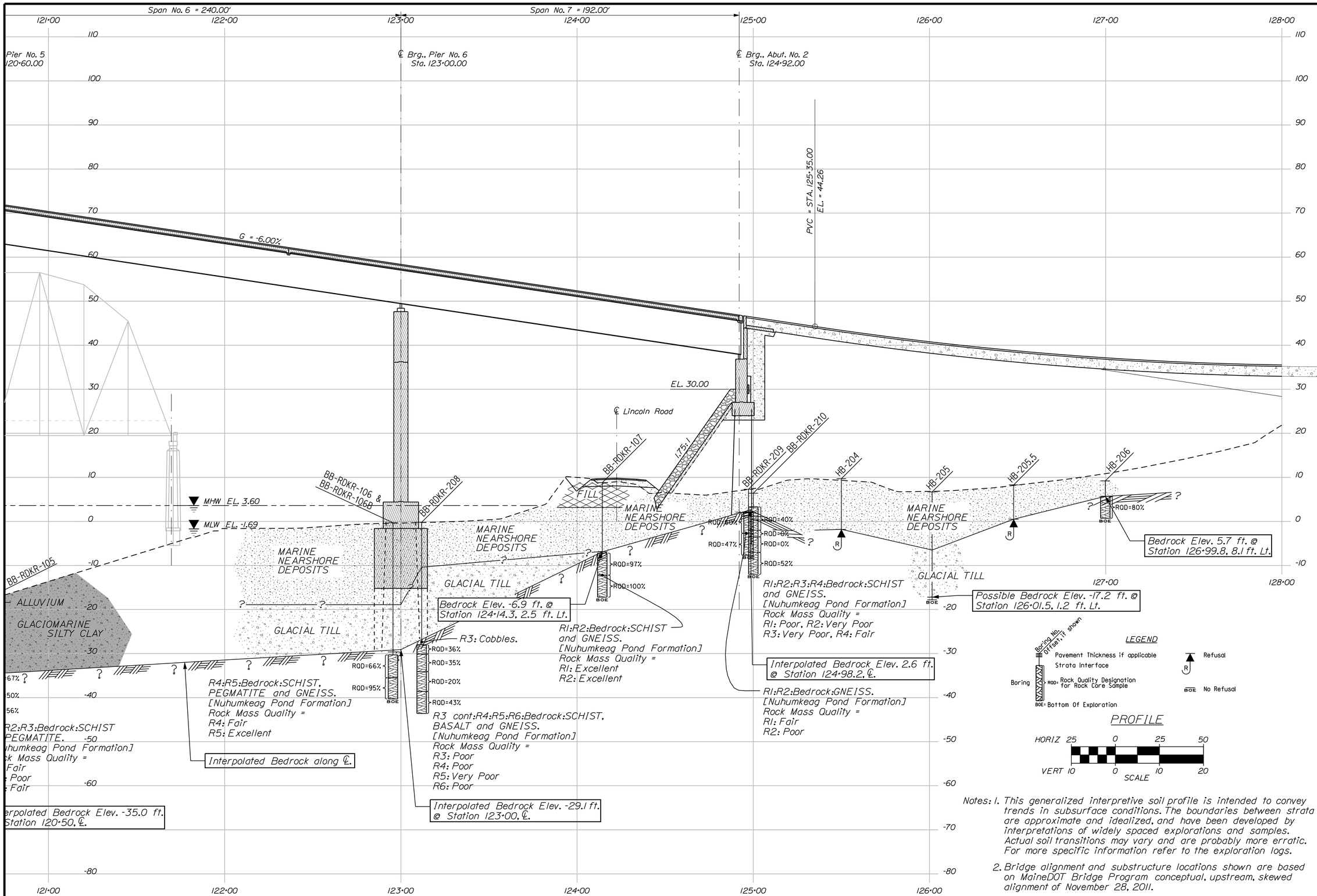

Notes: 1. This generalized interpretive soil profile is intended to convey trends in subsurface conditions. The boundaries between strata are approximate and idealized, and have been developed by interpretations of widely spaced explorations and samples. Actual soil transitions may vary and are probably more erratic. For more specific information refer to the exploration logs.

2. Bridge alignment and substructure locations shown are based on MaineDOT Bridge Program conceptual, upstream, skewed alignment of November 28, 2011.

3. Soil stratigraphy transitions illustrated a interpolated strata changes interpolated at bridge Centerline.

STATE OF MAINE
DEPARTMENT OF TRANSPORTATION

AC-BH-1267(400)

WIN 12674.00

BRIDGE NO. 2506

BRIDGE PLANS

	BY	DATE
PROJ. MANAGER	N. Benoit	
DESIGN-DETAILED	Team South	April 2012
CHECKED-REVIEWED	-----	-----
DESIGN2-DETAILED2	L.KRUSINSKI	T. WHITE	APR 2012
DESIGN3-DETAILED3	------	------
REVISIONS 1	------	------
REVISIONS 2	------	------
REVISIONS 3	------	------
REVISIONS 4	------	------
FIELD CHANGES	------	------

SIGNATURE

P.E. NUMBER

DATE

MAINE KENNEBEC BRIDGE
KENNEBEC RIVER
RICHMOND-DRESDEN SAGADAHOC-LINCOLN CTYS.

INTERPRETIVE SUBSURFACE PROFILE

SHEET NUMBER

28

OF 238

Filename: ...\00\GEOTECH\MSTA\028_ISP3.dgn Division: BRIDGE Username: dana.damren Date:3/27/2013

Filename: ...\029_BORING LOGS1 BRIDGE.dgn   Division: BRIDGE   Username: dana.damren   Date:3/27/2013

1

Maine Department of Transportation
Soil/Rock Exploration Log
US CUSTOMARY UNITS

Project: Maine Kennebec Bridge #2506	Location: Richmond-Dresden, Maine	Boring No.: BB-RDKR-101	WIN: 12674.00
Driller: Maine Test Borings	Elevation (ft.): 32.2	Auger ID/OD: 4"	
Operator: T. Schaefer	Datum: NAVD88	Sampler: 2" Split Spoon	
Logged By: M. Henrick	Rig Type: Mobile B-53 Track	Hammer Wt./Fall: 140/30 SS: 300/15 cas'g	
Date Start/Finish: 12/9/11	Drilling Method: Cased Wash Boring with Water	Core Barrel: NQ-2	
Boring Location: 110+05.1, 7.9 ft Rt.	Casing ID/OD: HW/NW	Water Level*: 4.4' after coring.	
Hammer Efficiency Factor: 0.6	Hammer Type: Automatic ☐ Hydraulic ☐ Rope & Cathead ☒		

Definitions:
D = Split Spoon Sample
MD = Unsuccessful Split Spoon Sample attempt
U = Thin Wall Tube Sample
MU = Unsuccessful Thin Wall Tube Sample attempt
V = Insitu Vane Shear Test, PP = Pocket Penetrometer
MV = Unsuccessful Insitu Vane Shear Test attempt
R = Rock Core Sample
SSA = Solid Stem Auger
HSA = Hollow Stem Auger
RC = Roller Cone
WOH = weight of 140lb. hammer
WOR/C = weight of rods or casing
WO1P = Weight of one person
S_u = Insitu Field Vane Shear Strength (psf)
T_v = Pocket Torvane Shear Strength (psf)
q_p = Unconfined Compressive Strength (ksf)
N-uncorrected = Raw field SPT N-value
Hammer Efficiency Factor = Annual Calibration Value
N_{60} = SPT N-uncorrected corrected for hammer efficiency
N_{60} = (Hammer Efficiency Factor/60%)*N-uncorrected
$S_{u(lab)}$ = Lab Vane Shear Strength (psf)
WC = water content, percent
LL = Liquid Limit
PL = Plastic Limit
PI = Plasticity Index
G = Grain Size Analysis
C = Consolidation Test

Sample Information

Depth (ft.)	Sample No.	Pen./Rec. (in.)	Sample Depth (ft.)	Blows (/6 in.) Shear Strength (psf) or RQD (%)	N-uncorrected	N_{60}	Casing Blows	Elevation (ft.)
0	1D	24/11	0.00 - 2.00	1/1/3/3	4	4	SSA	
	2D	7/7	2.00 - 2.58	7/50(1")	---			29.50
	R1	52/52	3.00 - 7.33	RQD = 92%			NQ-2	
5	R2	60/60	7.30 - 12.30	RQD = 85%				
10	R3	12/9	12.30 - 13.30	RQD = 75%				18.90

Visual Description and Remarks:

Brown, damp, soft, SILT, some clay, trace gravel, trace sand, trace organics (grass, roots) (Topsoil).

Brown-gray, damp, SILT, some medium to coarse sand, trace gravel, trace clay, red-brown staining on bottom 2" (Topsoil). —2.70

Top of Bedrock at Elev. 29.5 ft.
Auger ahead to 3.0 ft (Elev. 29.2 ft) and set HW and NW casing.
R1: Medium to light gray to rusty gray, fine to coarse grained, very strong to extremely strong (R5-R6), fresh to slightly weathered, banded/strongly foliated, biotite-muscovite-plagioclase-quartz GNEISS [Nehumkeag Pond Formation]. Discontinuities are close to moderately close, mostly parallel to foliation, gentle to steeply dipping, planar, rough, with rusty mineral coatings (FeOx). Rare red garnet crystals to 0.2 inch diameter.
Rock Mass Quality = Excellent
R1: Core times (min:sec)
3.0-4.0': (2:25)
4.0-5.0': (1:50)
5.0-6.0': (2:05)
6.0-7.0': (1:55)
7.0-7.3': (0:35) 100% Recovery
R2: Medium to light gray to rusty gray, fine to coarse grained, very strong to extremely strong (R5-R6), fresh to slightly weathered, banded/strongly foliated, biotite-muscovite-plagioclase-quartz GNEISS [Nehumkeag Pond Formation]. Discontinuities are close to moderately close, mostly parallel to foliation, gentle to steeply dipping, planar, rough, with rusty mineral coatings (FeOx). Rare red garnet crystals to 0.2 inch diameter.
Rock Mass Quality = Good
R2: Core times (min:sec)
7.3-8.3': (1:40)
8.3-9.3': (1:20)
9.3-10.3': (1:30)
10.3-11.3': (1:35)
11.3-12.3': (1:45) 100% Recovery
R3: Medium to light gray to rusty gray, fine to coarse grained, very strong to extremely strong (R5-R6), fresh to slightly weathered, banded/strongly foliated, biotite-muscovite-plagioclase- GNEISS [Nehumkeag Pond Formation]. Discontinuities are close to moderately close, mostly parallel to foliation, gentle to steeply dipping, planar, rough, with rusty mineral coatings (FeOx). Rare red garnet crystals to 0.2 inch diameter.
Rock Mass Quality = Fair
R3: Core times (min:sec)
12.3-13.3': (1:45) 75% Recovery —13.30

Bottom of Exploration at 13.30 feet below ground surface.

Laboratory Testing Results/AASHTO and Unified Class: G#267548 A-7-6/ML LL=41, PL=26, PI=15 WC=4.7% Org. Cont. = 5.8%; G#267549 A-4/ML Non-Plastic WC=15.6%; PLTq_p=14,100 psi

Remarks:
1. MaineDOT provided coordinates of test boring locations in NAD83 (96) ME 2000 West Zone Coordinate System and ground surface elevations in NAVD88.
2. PLTq_p = Peak compressive strength estimated from Point Load Index Test.

Stratification lines represent approximate boundaries between soil types; transitions may be gradual.
* Water level readings have been made at times and under conditions stated. Groundwater fluctuations may occur due to conditions other than those present at the time measurements were made.

Page 1 of 1   Boring No.: BB-RDKR-101

2

Maine Department of Transportation
Soil/Rock Exploration Log
US CUSTOMARY UNITS

Project: Maine Kennebec Bridge #2506	Location: Richmond-Dresden, Maine	Boring No.: BB-RDKR-201	WIN: 12674.00
Driller: Maine Test Borings	Elevation (ft.): 30.5	Auger ID/OD: 4.5"	
Operator: R. Leonard	Datum: NAVD88	Sampler: 2" Split Spoon	
Logged By: N. Chinburg	Rig Type: Mobile B-53 Track	Hammer Wt./Fall: 140/30 SS	
Date Start/Finish: 6/6/12	Drilling Method: SSA	Core Barrel: NQ-2	
Boring Location: 110+11.3, 13.7 ft Lt.	Casing ID/OD: HW/NW	Water Level*: 3.6	
Hammer Efficiency Factor: 0.6	Hammer Type: Automatic ☐ Hydraulic ☐ Rope & Cathead ☒		

Definitions: D = Split Spoon Sample; MD = Unsuccessful Split Spoon Sample attempt; U = Thin Wall Tube Sample; MU = Unsuccessful Thin Wall Tube Sample attempt; V = Insitu Vane Shear Test, PP = Pocket Penetrometer; MV = Unsuccessful Insitu Vane Shear Test attempt; R = Rock Core Sample; SSA = Solid Stem Auger; HSA = Hollow Stem Auger; RC = Roller Cone; WOH = weight of 140lb. hammer; WOR/C = weight of rods or casing; WO1P = Weight of one person; S_u = Insitu Field Vane Shear Strength (psf); T_v = Pocket Torvane Shear Strength (psf); q_p = Unconfined Compressive Strength (ksf); N-uncorrected = Raw field SPT N-value; Hammer Efficiency Factor = Annual Calibration Value; N_{60} = SPT N-uncorrected corrected for hammer efficiency; N_{60} = (Hammer Efficiency Factor/60%)*N-uncorrected; $S_{u(lab)}$ = Lab Vane Shear Strength (psf); WC = water content, percent; LL = Liquid Limit; PL = Plastic Limit; PI = Plasticity Index; G = Grain Size Analysis; C = Consolidation Test

Depth (ft.)	Sample No.	Pen./Rec. (in.)	Sample Depth (ft.)	Blows (/6 in.) Shear Strength (psf) or RQD (%)	N-uncorrected	N_{60}	Casing Blows	Elevation (ft.)
0	1D	24/10	0.00 - 2.00	1/3/4/23	7	7	SSA	
	2D	24/17	2.00 - 4.00	9/25/30/22	55	55		
	3D / R1	2/2 / 22/2	4.00 - 4.17 / 4.90 - 6.73	50(2") / RQD = 0%	---		NQ-2	26.30
5	R2	48/48	6.70 - 10.70	RQD = 88%				
10	R3	60/60	10.70 - 15.70	RQD = 93%				14.80

Visual Description and Remarks:

Brown transitioning to light brown, moist, loose, fine SAND, some silt, little gravel, trace organics (roots) (Marine Nearshore Deposits). Spoon plugged with gravel.

Light brown, moist, very dense, fine to medium SAND, some silt, trace gravel, trace clay (Marine Nearshore Deposits).

Light brown, wet, fine to medium SAND, little silt (Marine Nearshore Deposits). Trace weathered bedrock in tip of spoon. —4.20

Refusal on spoon at 4.2'.
Advance auger to 4.9'. Apparent weathered rock from 4.2-4.9'.
Begin NQ rock core at 4.9'.
Top of bedrock at Elev. 26.3 ft.
R1: Medium light gray (N6) to dark yellowish brown (10 YR 4/2), fine grained, weak to very weak (R1 to R2), moderately to highly weathered, quartz feldspar-biotite GNEISS [Nuhumkeag Pond Formation]. Discontinuities are very close, very strongly foliated, horizontal to steep, irregular, open, with FeOx coatings.
Rock Mass Quality = Very Poor
R1: Core Times (min:sec)
4.9-5.9' : (1:40)
5.9-6.7' : (3:40) Recovery = 9%
R2: Very light gray (N8) to moderate brown (5YR 4/4), fine to medium grained, medium weak to strong (R3 to R4), moderately to slightly weathered strongly foliated, quartz-feldspar-biotite GNEISS [Nuhumkeag Pond Formation]. Discontinuities are very close to close, horizontal to low angle, planar to irregular, rough, tight.
Rock Mass Quality = Good
R2: Core Times (min:sec)
6.7-7.7' : (Not timed)
7.7-8.7' : (Not timed)
8.7-9.7' : (1:30)
9.7-10.7' : (1:10) Recovery = 100%
R3: Very light gray (N8) to brownish gray (5YR 4/1), fine to medium grained strong (R4), moderately to slightly weathered, strongly foliated, quartz-feldspar-biotite GNEISS [Nuhumkeag Pond Formation]. Discontinuities are very close to close, horizontal to low angle, planar to irregular, rough, tight.
Rock Mass Quality = Excellent
R3: Core Times (min:sec)
10.7-11.7' : (1:40)
11.7-12.7' : (1:45)
12.7-13.7' : (1:40)
13.7-14.7' : (1:40)
14.7-15.7' : (1:25) Recovery = 100% —15.70

Bottom of Exploration at 15.70 feet below ground surface.

Laboratory Testing Results/AASHTO and Unified Class: G#267581 A-2-4, SC-SM WC=13.5%; UCTq_p=11,644 psi

Remarks:
1. MaineDOT provided the surveyed location of the test boring referencing Station and Offset relative to the project baseline. Ground surface elevations are based on the North American Vertical Datum of 1988 (NAVD88).
2. UCTq_p = Peak compressive strength from Uniaxial Compressive Strength Test.

Stratification lines represent approximate boundaries between soil types; transitions may be gradual.
* Water level readings have been made at times and under conditions stated. Groundwater fluctuations may occur due to conditions other than those present at the time measurements were made.

Page 1 of 1   Boring No.: BB-RDKR-201

3

Maine Department of Transportation
Soil/Rock Exploration Log
US CUSTOMARY UNITS

Project: Maine Kennebec Bridge #2506	Location: Richmond-Dresden, Maine	Boring No.: BB-RDKR-203	WIN: 12674.00
Driller: Maine Test Borings	Elevation (ft.): 0.7	Auger ID/OD: -	
Operator: M. Porter	Datum: NAVD88	Sampler: 2" Split Spoon	
Logged By: M. Henrick	Rig Type: CME-45 Skid on Anchor Barge	Hammer Wt./Fall: 140/30 SS: 300/15 Cas'g	
Date Start/Finish: 6/27/12	Drilling Method: Cased Wash Boring with Water	Core Barrel: NQ-2	
Boring Location: 111+56.1, 17.5 ft Lt.	Casing ID/OD: HW/NW	Water Level*: Water Boring - Tidal	
Hammer Efficiency Factor: 0.6	Hammer Type: Automatic ☐ Hydraulic ☐ Rope & Cathead ☒		

Definitions: D = Split Spoon Sample; MD = Unsuccessful Split Spoon Sample attempt; U = Thin Wall Tube Sample; MU = Unsuccessful Thin Wall Tube Sample attempt; V = Insitu Vane Shear Test, PP = Pocket Penetrometer; MV = Unsuccessful Insitu Vane Shear Test attempt; R = Rock Core Sample; SSA = Solid Stem Auger; HSA = Hollow Stem Auger; RC = Roller Cone; WOH = weight of 140lb. hammer; WOR/C = weight of rods or casing; WO1P = Weight of one person; S_u = Insitu Field Vane Shear Strength (psf); T_v = Pocket Torvane Shear Strength (psf); q_p = Unconfined Compressive Strength (ksf); N-uncorrected = Raw field SPT N-value; Hammer Efficiency Factor = Annual Calibration Value; N_{60} = SPT N-uncorrected corrected for hammer efficiency; N_{60} = (Hammer Efficiency Factor/60%)*N-uncorrected; $S_{u(lab)}$ = Lab Vane Shear Strength (psf); WC = water content, percent; LL = Liquid Limit; PL = Plastic Limit; PI = Plasticity Index; G = Grain Size Analysis; C = Consolidation Test

Depth (ft.)	Sample No.	Pen./Rec. (in.)	Sample Depth (ft.)	Blows (/6 in.) Shear Strength (psf) or RQD (%)	N-uncorrected	N_{60}	Casing Blows	Elevation (ft.)
0	1D	24/17	0.00 - 2.00	WOH/2/8/11	10	10	12	
							31	
	2D	13/9	2.00 - 3.08	12/20/50(1")	---		NR	-2.40
	R1	60/56	3.10 - 8.10	RQD = 57%			NQ-2	
5	R2	60/58	8.10 - 13.10	RQD = 68%				
10								-12.40

Visual Description and Remarks:

Brown-gray, wet, stiff, SILT, some fine sand, trace clay, little organics (roots, bark) (Alluvium).

Light gray, wet, fine SAND, little gravel, little silt, trace organics (Alluvium). —3.10

Top of Bedrock at Elev. -2.4 ft.
R1: 3.1 - 3.4 ft.: Medium light gray (N6) to pinkish gray (5YR 8/1), coarse to very coarse grained, very strong (R5) , slightly weathered, slightly foliated, quartz-feldspar PEGMATITE [Nuhumkeag Pond Formation]. No discontinuities.
3.4 - 7.2 ft.: Brownish black (5YR 2/1) to light gray (N7), fine to coarse grained, medium weak to strong (R3 to R4), slightly to moderately weathered, strongly foliated, biotite-quartz-feldspar SCHIST [Nuhumkeag Pond Formation]. Discontinuities are very close to close, planar to irregular, smooth to rough, horizontal to steep, open to tight with FeOx coatings.
7.2 - 8.1 ft.: Medium gray (N6) to very light gray (N8), medium to coarse grained, strong (R4), slightly weathered to fresh, strongly foliated quartz-feldspar-biotite GNEISS [Nuhumkeag Pond Formation]. Discontinuities are close, planar, horizontal, smooth to rough, tight.
Rock Mass Quality = Fair
R1: Core Times (min:sec)
3.1-4.1': (4:05)
4.1-5.1': (3:40)
5.1-6.1': (2:55)
6.1-7.1': (3:20)
7.1-8.1': (3:50) Recovery = 93%
R2: Light gray (N7) to very light gray (N8), medium to coarse grained, strong (R4) to very strong (R5) slightly weathered to fresh, strongly foliated quartz-feldspar-biotite GNEISS [Nuhumkeag Pond Formation]. Discontinuities are very close to moderately close, planar to irregular, horizontal to low angle, smooth to rough, tight.
Rock Mass Quality = Fair
R2: Core Times (min:sec)
8.1-9.1': (2:10)
9.1-10.1': (6:10)
10.1-11.1': (3:10)
11.1-12.1': (3:20)
12.1-13.1': (2:25) Recovery = 97% —13.10

Bottom of Exploration at 13.10 feet below ground surface.

Laboratory Testing Results/AASHTO and Unified Class: G#267600 A-4, CL-ML WC=34.3%; UCTq_p=10,801 psi

Remarks:
1. MaineDOT provided the surveyed location of the test boring referencing Station and Offset relative to the project baseline. Ground surface elevations are based on the North American Vertical Datum of 1988 (NAVD88).
2. UCTq_p = Peak compressive strength from Uniaxial Compressive Strength Test.

Stratification lines represent approximate boundaries between soil types; transitions may be gradual.
* Water level readings have been made at times and under conditions stated. Groundwater fluctuations may occur due to conditions other than those present at the time measurements were made.

Page 1 of 1   Boring No.: BB-RDKR-203

6

Maine Department of Transportation
Soil/Rock Exploration Log
US CUSTOMARY UNITS

Project: Maine Kennebec Bridge #2506	Location: Richmond-Dresden, Maine	Boring No.: BB-RDKR-103	WIN: 12674.00
Driller: Maine Test Borings	Elevation (ft.): -22.1	Auger ID/OD: -	
Operator: B.Enos	Datum: NAVD88	Sampler: 2" Split Spoon	
Logged By: M. Henrick	Rig Type: CME-45 Skid on Anchor Barge	Hammer Wt./Fall: 140/30 SS: 300/15 cas'g	
Date Start/Finish: 11/29-11/30/11	Drilling Method: Cased Wash Boring with Water	Core Barrel: NQ-2	
Boring Location: 115+66.1, 14.7 ft Rt.	Casing ID/OD: HW/NW	Water Level*: Water Boring - Tidal	
Hammer Efficiency Factor: 0.6	Hammer Type: Automatic ☐ Hydraulic ☐ Rope & Cathead ☒		

Definitions: D = Split Spoon Sample; MD = Unsuccessful Split Spoon Sample attempt; U = Thin Wall Tube Sample; MU = Unsuccessful Thin Wall Tube Sample attempt; V = Insitu Vane Shear Test, PP = Pocket Penetrometer; MV = Unsuccessful Insitu Vane Shear Test attempt; R = Rock Core Sample; SSA = Solid Stem Auger; HSA = Hollow Stem Auger; RC = Roller Cone; WOH = weight of 140lb. hammer; WOR/C = weight of rods or casing; WO1P = Weight of one person; S_u = Insitu Field Vane Shear Strength (psf); T_v = Pocket Torvane Shear Strength (psf); q_p = Unconfined Compressive Strength (ksf); N-uncorrected = Raw field SPT N-value; Hammer Efficiency Factor = Annual Calibration Value; N_{60} = SPT N-uncorrected corrected for hammer efficiency; N_{60} = (Hammer Efficiency Factor/60%)*N-uncorrected; $S_{u(lab)}$ = Lab Vane Shear Strength (psf); WC = water content, percent; LL = Liquid Limit; PL = Plastic Limit; PI = Plasticity Index; G = Grain Size Analysis; C = Consolidation Test

Depth (ft.)	Sample No.	Pen./Rec. (in.)	Sample Depth (ft.)	Blows (/6 in.) Shear Strength (psf) or RQD (%)	N-uncorrected	N_{60}	Casing Blows	Elevation (ft.)
0	1D	24/12	0.00 - 2.00	WOH/WOH/1/WOH	1	1	WOC	
							WOH	
							1	
	2D	24/7	3.00 - 5.00	1/WOH/WOH/1	---		2	
							4	
5	3D	24/9	5.00 - 7.00	1/1/1/1	2	2	5	
							8	
							6	
	4D	24/15	8.00 - 10.00	1/3/3/11	6	6	5	-31.00
							5	
10	5D	24/22	10.00 - 12.00	1/WOH/WOH/WOH	---		2	
							3	
							HPa	
	6D / 1MV	24/13	13.00 - 15.00 / 13.00 - 13.03	WOR/1/WOH/WOH Would not push.	Note 2			
15	7D / 2MV	24/10	16.00 - 18.00 / 16.10 - 16.13	WOH/WOH/2/3 Would not push.	Note 2			-40.10
	8D	24/5	18.00 - 20.00	7-7-5-4	12	12	5	
							13b	-41.90
20	R1	60/58	20.50 - 25.50	RQD = 73%			NQ-2	
25	R2	62/59	25.50 - 30.67	RQD = 47%				
30								-52.80

Visual Description and Remarks:

Brown-gray, wet, very loose, fine to coarse SAND, trace silt, trace gravel, trace organics (wood chips) (Alluvium). Wood present as lenses in spoon tip.

Brown-gray, wet, very loose, fine to coarse SAND, little silt, little clay, little organics (wood chips), trace gravel (Alluvium).
Large portion of woodchips in wash at 4 ft.

Brown-gray, wet, very loose, fine to medium SAND, with some organics (wood chips) (Alluvium). Wood present in lenses 1/4-1" thick.

Roller cone plugged with wood after washing to 8 ft.

Top 11": Gray-brown, wet, loose, fine to coarse SAND, trace silt, trace wood (Alluvium). —8.90

Bottom 4": Gray, wet, Silty CLAY, trace medium sand (Presumpscot Formation).
Gray, wet, very soft, Silty CLAY, trace fine to medium sand, trace gravel (Presumpscot Formation). Sand present in lenses, trace black staining.

aHP = Hydraulic push.

Gray, wet, very soft Clayey SILT, little fine to medium sand (Presumpscot Formation). Sand present in lenses.
V1: Failed vane attempt.

Gray, wet, soft, Clayey SILT, trace fine to medium sand, trace fine gravel (Presumpscot Formation).
Coarse grained material present in lenses.
V2: Failed vane attempt.
Brown sand in wash at 17 ft, gravel at 17.8 ft based on drill behavior. —18.00

Gray and dark gray, wet, medium dense, fine SAND, some gravel, some silt, trace clay (Submarine Outwash).
b = Casing blows from 19.0-19.8 ft. —19.80

Top of Bedrock at Elev. -41.9 ft.
Roller cone ahead to 20.5 ft (Elev. -42.6 ft).
R1: Rusty, medium dark gray, fine to medium grained, very strong to extremely strong (R5-R6), fresh to slightly weathered, banded/strongly foliated, muscovite-biotite-quartz GNEISS [Nehumkeag Pond Formation]. Discontinuities are very close to moderately close, subhorizontal to very steep, stepped to planar, very rough, and discordant and concordant to foliation. Rare red garnet to 0.2-inch diameter.
Rock Mass Quality = Fair
R1: Core Times (min:sec)
20.5-21.5': (3:50)
21.5-22.5': (3:40)
22.5-23.5': (2:35)
23.5-24.5': (2:45)
24.5-25.5': (2:50) 97% Recovery
R2: Medium to dark gray, fine to medium grained, very strong to extremely strong (R5-R6), fresh to slightly weathered, banded/strongly foliated, muscovite-biotite-quartz GNEISS [Nehumkeag Pond Formation]. Discontinuities are very close to moderately close, subhorizontal to very steep, very rough, stepped to planar, and discordant and concordant to foliation. Rare red garnet to 0.25-inch diameter.
Rock Mass Quality = Poor
R2: Core Times (min:sec)
25.5-26.5': (4:45)
26.5-27.5': (2:55)
27.5-28.5': (2:30)
28.5-29.5': (2:50)
29.5-30.7': (2:45) 95% Recovery —30.70

Bottom of Exploration at 30.70 feet below ground surface.

Laboratory Testing Results/AASHTO and Unified Class: G#262726 A-1-b/SP WC=24.9%; G#267528 A-4/SC-SM WC=21.3%; G#267529 A-6/CL LL=34, PL=19, PI=15 WC=33.7%; G#267530 A-6/CL LL=27, PL=17, PI=10 WC=33.3%; G#267531 A-1-b/SC-SM WC=9.9%; PLTq_p=13,300 psi; UCTq_p=5,786 psi

Remarks:
1. MaineDOT provided coordinates of test boring locations in NAD83 (96) ME 2000 West Zone Coordinate System and ground surface elevations in NAVD88.
2. Blow counts for spoons driven through a disturbed field vane test location cannot be used to determine N-value.
3. PLTq_p = Peak compressive strength estimated from Point Load Index Test.
4. UCTq_p = Peak compressive strength from Uniaxial Compressive Strength Test.

Stratification lines represent approximate boundaries between soil types; transitions may be gradual.
* Water level readings have been made at times and under conditions stated. Groundwater fluctuations may occur due to conditions other than those present at the time measurements were made.

Page 1 of 1   Boring No.: BB-RDKR-103

4

Maine Department of Transportation
Soil/Rock Exploration Log
US CUSTOMARY UNITS

Project: Maine Kennebec Bridge #2506	Location: Richmond-Dresden, Maine	Boring No.: BB-RDKR-204	WIN: 12674.00
Driller: Maine Test Borings	Elevation (ft.): -22.0	Auger ID/OD: -	
Operator: M. Porter	Datum: NAVD88	Sampler: 2" Split Spoon	
Logged By: M. Henrick	Rig Type: CME-45 Skid on Anchor Barge	Hammer Wt./Fall: 140/30 SS: 300/15 Cas'g	
Date Start/Finish: 6/26/12	Drilling Method: Cased Wash Boring with Water	Core Barrel: NQ-2	
Boring Location: 113+27.6, 15.3 ft Lt.	Casing ID/OD: HW/NW	Water Level*: Water Boring - Tidal	
Hammer Efficiency Factor: 0.6	Hammer Type: Automatic ☐ Hydraulic ☐ Rope & Cathead ☒		

Definitions: D = Split Spoon Sample; MD = Unsuccessful Split Spoon Sample attempt; U = Thin Wall Tube Sample; MU = Unsuccessful Thin Wall Tube Sample attempt; V = Insitu Vane Shear Test, PP = Pocket Penetrometer; MV = Unsuccessful Insitu Vane Shear Test attempt; R = Rock Core Sample; SSA = Solid Stem Auger; HSA = Hollow Stem Auger; RC = Roller Cone; WOH = weight of 140lb. hammer; WOR/C = weight of rods or casing; WO1P = Weight of one person; S_u = Insitu Field Vane Shear Strength (psf); T_v = Pocket Torvane Shear Strength (psf); q_p = Unconfined Compressive Strength (ksf); N-uncorrected = Raw field SPT N-value; Hammer Efficiency Factor = Annual Calibration Value; N_{60} = SPT N-uncorrected corrected for hammer efficiency; N_{60} = (Hammer Efficiency Factor/60%)*N-uncorrected; $S_{u(lab)}$ = Lab Vane Shear Strength (psf); WC = water content, percent; LL = Liquid Limit; PL = Plastic Limit; PI = Plasticity Index; G = Grain Size Analysis; C = Consolidation Test

Depth (ft.)	Sample No.	Pen./Rec. (in.)	Sample Depth (ft.)	Blows (/6 in.) Shear Strength (psf) or RQD (%)	N-uncorrected	N_{60}	Casing Blows	Elevation (ft.)
0	1D	24/16	0.00 - 2.00	WOH/5/12/11	17	17	12	
							23	
							123	-25.20
	R1	31/30	3.30 - 5.88	RQD = 39%			NQ-2	
5	R2	41/38	5.90 - 9.32	RQD = 68%				-31.30

Visual Description and Remarks:

Top 1": Dark gray, wet, medium dense, fine to coarse GRAVEL, some coarse sand, little organics (shells) (Alluvium).
Bottom 15": Light gray, wet, very stiff, Silty CLAY, some fine sand, trace gravel (Alluvium). —3.20

Top of Bedrock at Elev. -25.2 ft.
Roller cone to 3.3 ft.
R1: Dark gray (N3) to medium light gray (N5), fine to medium grained, medium weak to strong (R3 to R4), slightly to highly weathered, strongly foliated, biotite-quartz SCHIST [Nuhumkeag Pond Formation]. Discontinuities are very close to close, horizontal to steep, planar, smooth to rough, generally concordant to foliation, tight. Highly weathered zone 5.6-5.7 ft.
Rock Mass Quality = Poor
R1: Core Times (min:sec)
3.3-4.3': (4:10)
4.3-5.3': (3:15)
5.3-5.9': (4:52) Recovery = 97%
Core barrel plugged at 5.9 ft.
R2: 5.9 - 8.4 ft.: Very light gray (N8) to light gray (N7), coarse to very coarse grained, very strong to extremely strong (R5-R6), fresh, slightly foliated, quartz-feldspar PEGMATITE [Nuhumkeag Pond Formation]. Discontinuities are very close to moderately close, planar, horizontal, rough.
8.4 - 9.3 ft.: Medium light gray (N5) to brownish black (5YR 2/1), fine to medium grained, strong (R4), slightly weathered, strongly foliated biotite-quartz SCHIST [Nuhumkeag Pond Formation]. Discontinuities are very close to close, planar, horizontal to steep, smooth, tight.
Rock Mass Quality = Fair
R2: Core Times (min:sec)
5.9-6.3': (2:00)
6.3-7.3': (3:10)
7.3-8.3': (4:05)
8.3-9.3': (2:55) Recovery = 93% —9.30

Bottom of Exploration at 9.30 feet below ground surface.

Laboratory Testing Results/AASHTO and Unified Class: G#267507 A-4, CL LL=25, PL=16, PI=9 WC=21.1%; UCTq_p=20,829 psi

Remarks:
1. MaineDOT provided the surveyed location of the test boring referencing Station and Offset relative to the project baseline. Ground surface elevations are based on the North American Vertical Datum of 1988 (NAVD88).
2. UCTq_p = Peak compressive strength from Uniaxial Compressive Strength Test.

Stratification lines represent approximate boundaries between soil types; transitions may be gradual.
* Water level readings have been made at times and under conditions stated. Groundwater fluctuations may occur due to conditions other than those present at the time measurements were made.

Page 1 of 1   Boring No.: BB-RDKR-204

5

Maine Department of Transportation
Soil/Rock Exploration Log
US CUSTOMARY UNITS

Project: Maine Kennebec Bridge #2506	Location: Richmond-Dresden, Maine	Boring No.: BB-RDKR-102	WIN: 12674.00
Driller: Maine Test Borings	Elevation (ft.): -21.3	Auger ID/OD: -	
Operator: B. Enos	Datum: NAVD88	Sampler: 2" Split Spoon	
Logged By: M. Henrick	Rig Type: CME-45 Skid on Anchor Barge	Hammer Wt./Fall: 140/30 SS: 300/15 cas'g	
Date Start/Finish: 11/29/11	Drilling Method: Cased Wash Boring with Water	Core Barrel: NQ-2	
Boring Location: 113+52.8, 9.3 ft Rt.	Casing ID/OD: HW/NW	Water Level*: Water Boring - Tidal	
Hammer Efficiency Factor: 0.6	Hammer Type: Automatic ☐ Hydraulic ☐ Rope & Cathead ☒		

Definitions: D = Split Spoon Sample; MD = Unsuccessful Split Spoon Sample attempt; U = Thin Wall Tube Sample; MU = Unsuccessful Thin Wall Tube Sample attempt; V = Insitu Vane Shear Test, PP = Pocket Penetrometer; MV = Unsuccessful Insitu Vane Shear Test attempt; R = Rock Core Sample; SSA = Solid Stem Auger; HSA = Hollow Stem Auger; RC = Roller Cone; WOH = weight of 140lb. hammer; WOR/C = weight of rods or casing; WO1P = Weight of one person; S_u = Insitu Field Vane Shear Strength (psf); T_v = Pocket Torvane Shear Strength (psf); q_p = Unconfined Compressive Strength (ksf); N-uncorrected = Raw field SPT N-value; Hammer Efficiency Factor = Annual Calibration Value; N_{60} = SPT N-uncorrected corrected for hammer efficiency; N_{60} = (Hammer Efficiency Factor/60%)*N-uncorrected; $S_{u(lab)}$ = Lab Vane Shear Strength (psf); WC = water content, percent; LL = Liquid Limit; PL = Plastic Limit; PI = Plasticity Index; G = Grain Size Analysis; C = Consolidation Test

Depth (ft.)	Sample No.	Pen./Rec. (in.)	Sample Depth (ft.)	Blows (/6 in.) Shear Strength (psf) or RQD (%)	N-uncorrected	N_{60}	Casing Blows	Elevation (ft.)
0	1D	24/1	0.00 - 2.00	1/WOH/WOH/WOH	0	0	WOH	
							3	
							10	-24.50
	2D	24/14	3.00 - 5.00	10/3/WOH/WOH	3	3	92	
							14	
5	3D	7/2	5.50 - 6.08	10/50(1")	---		CWBa	-26.80 / -27.50
	R1	60/54	7.70 - 12.70	RQD = 50%			NQ-2	
10	R2	60/58	12.70 - 17.70	RQD = 67%				-39.00

Visual Description and Remarks:

Light brown-gray, wet, very loose, fine to coarse SAND, trace fine gravel, trace silt (Alluvium). Resampled 17/24".

Top 3": Light brown-gray, wet, very loose, fine to coarse SAND, trace fine gravel, trace silt (Alluvium). —3.20
Middle 7": Gray, wet, soft fine to coarse Sandy SILT, some clay (Presumpscot Formation).
Bottom 4": Gray, wet, soft, Clayey SILT, little fine sand (Presumpscot Formation).
a = Cased Washed Boring, driller washed ahead with HW bit and lowered NW casing. No casing blows performed. —5.50

Gray and light brown, wet, GRAVEL, some fine to coarse sand, trace silt, trace clay (Submarine Outwash).
Fractured quartz in spoon. —6.20

Top of Bedrock at Elev. -27.5 ft.
Roller cone ahead to 7.7 ft (Elev. -29.0 ft).
R1: Medium to light gray, to rusty medium gray, fine to medium grained, very strong to extremely strong (R5-R6), fresh to slightly weathered, banded/strongly foliated, muscovite-biotite-quartz GNEISS [Nehumkeag Pond Formation]. Discontinuities are moderately close to very close, moderately steep, planar, rough, and discordant and concordant to foliation, with rusty mineral coatings (FeOx). Rare red garnet to 0.2-inch diameter.
Rock Mass Quality = Poor
R1: Core Times (min:sec)
7.7-8.7': (2:45)
8.7-9.7': (2:50)
9.7-10.7': (2:25)
10.7-11.7': (2:40)
11.7-12.7': (2:45) 90% Recovery
R2: Medium gray, fine to medium grained, very strong to extremely strong (R5-R6), fresh to slightly weathered, banded/strongly foliated, banded/strongly foliated, muscovite-biotite-quartz GNEISS [Nehumkeag Pond Formation]. Discontinuities are moderately close, subhorizontal to very steep, rough to very rough, planar, and discordant and concordant to foliation.
Rock Mass Quality = Fair
R2: Core Times (min:sec)
12.7-13.7': (2:05)
13.7-14.7': (3:40)
14.7-15.7': (3:00)
15.7-16.7': (3:10)
16.7-17.7': (2:50) Recovery = 97% —17.70

Bottom of Exploration at 17.70 feet below ground surface.

Laboratory Testing Results/AASHTO and Unified Class: G#267527 A-1-b/SP WC=24.7%; PLTq_p=12,000 psi

Remarks:
1. MaineDOT provided coordinates of test boring locations in NAD83 (96) ME 2000 West Zone Coordinate System and ground surface elevations in NAVD88.
2. PLTq_p = Peak compressive strength estimated from Point Load Index Test.

Stratification lines represent approximate boundaries between soil types; transitions may be gradual.
* Water level readings have been made at times and under conditions stated. Groundwater fluctuations may occur due to conditions other than those present at the time measurements were made.

Page 1 of 1   Boring No.: BB-RDKR-102

September 2012   Page 1 of 1   Project No.: 113-87419.01

Table 2: Power Auger and Hand Auger Exploration Locations and Depths
Final Design Geotechnical Investigation
Kennebec River Bridge
Richmond-Dresden, Maine
MaineDOT WIN: 12674.00

Auger Designation[1]	Location	Existing Ground Surface Elevation[2] (feet)	As-Drilled Locations[3] Station	As-Drilled Locations[3] Offset	Auger Depth (feet)	Refusal Elevation[4] (feet)	Comments
PA-200	Richmond	28.4	110+21.1	12.9 L	3.5	24.90	
PA-201	Richmond	33.2	109+98.4	6.6 R	3.0	30.2	
PA-202	Richmond	31.6	110+03.2	16.3 L	2.9	28.7	
PA-203	Richmond	31.9	110+07.1	8.8 R	2.6	29.3	
PA-204	Richmond	35.4	109+84.2	4.5 L	5.1	30.3	
PA-205	Richmond	29.2	110+14.5	24.5 L	3.3	25.9	
PA-206	Richmond	30.0	110+16.3	9.6 R	3.0	27.0	
PA-207	Richmond	27.3	110+30.4	5.2 R	5.2	22.1	
PA-208	Richmond	29.5	110+18.5	CL	3.8	25.7	Ground surface elevation estimated and not surveyed
PA-209	Dresden	7.5	125+02	27 R	6.0	1.5	Ground surface elevation estimated and not surveyed
PA-210	Dresden	7.0	125+07	24 L	4.0	3.0	Ground surface elevation estimated and not surveyed
PA-211	Richmond	31.1	110+04.5	36.4 L	3.9	27.2	
PA-212	Richmond	27.1	110+24.0	33.2 L	4.6	22.5	
PA-213	Richmond	23.1	110+47.9	25.5 R	5.4	17.7	
PA-214	Richmond	23.0	110+50.9	6.7 R	5.4	17.6	
PA-215	Richmond	22.5	110+53.5	12.8 L	2.7	19.8	
HA-201	Richmond	35.1	110+13.7	18.4 R	2.7	32.4	
HA-202	Richmond	28.9	110+20.9	21.7 R	3.3	25.6	
Organic Layer	Dresden	-	-	-	2 to 22 inches	-	15 hand augers were made to assess organic layer thickness in the Dresden approach and were not labeled or surveyed. Thickness of organic layer is shown in Figure 7 in the approximate locations where the hand augers were completed.

Notes:
1. PA series explorations are 4.5-inch diameter solid stem augers advanced to refusal with the Maine Test Borings drill rig. HA series explorations are 1-inch diameter hand auger probes advanced to refusal by hand.
2. Elevations reference the North American Vertical Datum of 1988 (NAVD88).
3. As-drilled locations and elevations surveyed by MaineDOT using GPS survey equipment. Locations reference the project baseline.
4. Refusal surface interpreted to be bedrock surface.

Prepared By: MRH
Checked By: JDL
Reviewed By: MSP

P:\Projects\2011\113-87419.01 MaineDOT Richmond-Dresden Bridge Final Design\900 Report\Tables\120830 Tbl 2 Power Auger.mp.xlsx

Golder Associates

STATE OF MAINE
DEPARTMENT OF TRANSPORTATION

AC-BH-1267(400)

BRIDGE PLANS

WIN 12674.00

BRIDGE NO. 2506

SIGNATURE

P.E. NUMBER

DATE

	BY	DATE
PROJ. MANAGER	N. Benoit	
DESIGN-DETAILED	Team South / Team South	April 2012
CHECKED-REVIEWED	----- / -----	-----
DESIGN2-DETAILED2	L.KRUSINSKI / T.WHITE	JAN 2013
DESIGN3-DETAILED3	-----	-----
REVISIONS 1	-----	-----
REVISIONS 2	-----	-----
REVISIONS 3	-----	-----
REVISIONS 4	-----	-----
FIELD CHANGES	-----	-----

MAINE KENNEBEC BRIDGE
KENNEBEC RIVER
RICHMOND-DRESDEN SAGADAHOC-LINCOLN CTYS.

BORING LOGS

SHEET NUMBER

Filename: ...\030_BORING LOGS2 BRIDGE.dgn   Division: BRIDGE   Username: dana.damren   Date:3/27/2013

Maine Department of Transportation
Soil/Rock Exploration Log
US CUSTOMARY UNITS

Project: Maine Kennebec Bridge #2506	Location: Richmond-Dresden, Maine			Boring No.: BB-RDKR-205	WIN: 12674.00
Driller:	Maine Test Borings	Elevation (ft.)	-21.0	Auger ID/OD:	-
Operator:	M. Porter	Datum:	NAVD88	Sampler:	2" Split Spoon
Logged By:	M. Henrick	Rig Type:	CME-45 Skid on Anchor Barge	Hammer Wt./Fall:	140/30 SS: 300/15 Cas'g
Date Start/Finish:	6/29/12	Drilling Method:	Cased Wash Boring with Water	Core Barrel:	NQ-2
Boring Location:	115+90.5, 14.6 ft Lt.	Casing ID/OD:	HW/NW	Water Level*:	Water Boring - Tidal
Hammer Efficiency Factor: 0.6		Hammer Type:	Automatic ☐ Hydraulic ☐ Rope & Cathead ☒		

Definitions:
D = Split Spoon Sample
MD = Unsuccessful Split Spoon Sample attempt
U = Thin Wall Tube Sample
MU = Unsuccessful Thin Wall Tube Sample attempt
V = Insitu Vane Shear Test, PP = Pocket Penetrometer
MV = Unsuccessful Insitu Vane Shear Test attempt
R = Rock Core Sample
SSA = Solid Stem Auger
HSA = Hollow Stem Auger
RC = Roller Cone
WOH = weight of 140lb. hammer
WOR/C = weight of rods or casing
WO1P = Weight of one person
S_u = Insitu Field Vane Shear Strength (psf)
T_v = Pocket Torvane Shear Strength (psf)
q_p = Unconfined Compressive Strength (ksf)
N-uncorrected = Raw field SPT N-value
Hammer Efficiency Factor = Annual Calibration Value
N_{60} = SPT N-uncorrected corrected for hammer efficiency
N_{60} = (Hammer Efficiency Factor/60%)*N-uncorrected
$S_{u(lab)}$ = Lab Vane Shear Strength (psf)
WC = water content, percent
LL = Liquid Limit
PL = Plastic Limit
PI = Plasticity Index
G = Grain Size Analysis
C = Consolidation Test

Sample Information

Depth (ft.)	Sample No.	Pen./Rec. (in.)	Sample Depth (ft.)	Blows (/6 in.) Shear Strength (psf) or RQD (%)	N-uncorrected	N_{60}	Casing Blows	Elevation (ft.)
0							WOC	
1							WOC	
2	1D	24/8	2.00 - 4.00	1/1/WOH/WOH	1	1	WOH	
3							2	
4							3	
5	2D	24/6	5.00 - 7.00	WOR/W1P/W1P/1	---		HP_a	
6							8	
7	3D	24/11	7.00 - 9.00	3/4/1/6	5	5	13	
8							20	
9							32	
10	4D	24/4	10.00 - 12.00	WOR/WOH/WOH/WOH	---		HP_a	-31.00
12	5D MV1	24/11	12.00 - 14.00 12.00 - 12.08	1/WOH/1/WOH	1	1		
15	6D	24/24	15.00 - 17.00	3/3/1/WOH	4	4		-36.80
18							10	
19							14	
21	7D R1	8/6 60/57	21.00 - 21.67 21.80 - 26.80	3/50(2") RQD = 20%	---		NR NQ-2	-42.80
26.8								-47.80

Visual Description and Remarks / Laboratory Testing Results/ AASHTO and Unified Class.

Casing sunk to 1.8 ft. set to 2.0. Sand in wash.

Brown, wet, very loose, fine to coarse SAND, trace gravel, trace organics (wood and bark) (Alluvium). — #267508 Org. Cont.= 4.5%

Brown, wet, very loose, fine to medium SAND, trace gravel, trace silt (Alluvium).
HP_a=Casing pushed with drill rig hydraulics. — G#267509 A-1-b, SP WC=23.9%

Brown, wet, loose, fine to coarse SAND, trace gravel, trace silt, trace organics (bark and wood) (Alluvium). 2" lens of coarse sand in middle of recovery. — G#267510 A-1-b, SP WC=26.6%

—10.00—

Gray with black staining, wet, very soft, Silty CLAY, little coarse sand (Presumpscot Formation). Resampled with 3" spoon, 24" recovery.

Gray with trace black staining, wet, very soft, Clayey SILT, some fine to medium sand, trace gravel (Presumpscot Formation). Sand present in lens at top 2" of spoon.
T_v=180, 220 psf
Failed 65x130mm vane attempt. Could not push vane past 12.1 ft. — G#175401 A-4, CL-ML LL=20, PL= 15, PI=5 WC=44.4%

Gravel lens at 14.9' based on drill behavior.
Top 10": Gray, wet, soft, Silty CLAY, trace gravel, trace fine sand (Presumpscot Formation). — G#267511 A-4, CL-ML WC=28.5%

—15.80—

Bottom 14": Gray, wet, loose, Clayey SILT, trace gravel, trace fine sand (Submarine Outwash). — G#267512 A-4, CL WC=6.9%

Gravel at 19' based on drill behavior.

Gray, wet, Silty fine SAND, little gravel, little clay (Submarine Outwash).

—21.80—

Spoon refusal at 21.7 ft.
Casing refusal at 21.8 ft.
Top of Bedrock at Elev. -42.8 ft.
R1: Brownish gray (5YR 4/1) to very light gray (N8), fine to medium grained, strong (R4) to very strong (R5), moderately weathered to fresh, banded/strongly foliated, quartz-feldspar-biotite GNEISS [Nuhumkeag Pond Formation]. Discontinuities are very close to close, horizontal to steep, irregular to planar, rough to very rough, discordant and concordant to foliation. Highly fractured zone 25.0 25.8 ft.: coarse grained light gray (N7) quartz vein 21.8 to 21.9 ft.
Rock Mass Quality = Very Poor
R1: Core Times (min:sec)
21.8-22.8': (8:05)
22.8-23.8': (5:20)
23.8-24.8': (5:35)
24.8-25.8': (6:40)
25.8-26.8': (7:30) Recovery = 95%

—26.80—

Bottom of Exploration at 26.80 feet below ground surface.

Remarks:

1. MaineDOT provided the surveyed location of the test boring referencing Station and Offset relative to the project baseline. Ground surface elevations are based on the North American Vertical Datum of 1988 (NAVD88).

Stratification lines represent approximate boundaries between soil types; transitions may be gradual.

* Water level readings have been made at times and under conditions stated. Groundwater fluctuations may occur due to conditions other than those present at the time measurements were made.

Page 1 of 1
Boring No.: BB-RDKR-205

Maine Department of Transportation
Soil/Rock Exploration Log
US CUSTOMARY UNITS

Project: Maine Kennebec Bridge #2506	Location: Richmond-Dresden, Maine			Boring No.: BB-RDKR-104	WIN: 12674.00
Driller:	Maine Test Borings	Elevation (ft.)	-19.8	Auger ID/OD:	-
Operator:	B.Enos	Datum:	NAVD88	Sampler:	2" Split Spoon / 3" Tube
Logged By:	M. Henrick	Rig Type:	CME-45 Skid on Anchor Barge	Hammer Wt./Fall:	140/30 SS: 300/15 cas'g
Date Start/Finish:	11/30-12/2/11	Drilling Method:	Cased Wash Boring with Mud	Core Barrel:	NQ-2
Boring Location:	118+13.4, 8.5 ft Rt.	Casing ID/OD:	HW/NW	Water Level*:	Water Boring - Tidal
Hammer Efficiency Factor: 0.6		Hammer Type:	Automatic ☐ Hydraulic ☐ Rope & Cathead ☒		

Definitions:
D = Split Spoon Sample
MD = Unsuccessful Split Spoon Sample attempt
U = Thin Wall Tube Sample
MU = Unsuccessful Thin Wall Tube Sample attempt
V = Insitu Vane Shear Test, PP = Pocket Penetrometer
MV = Unsuccessful Insitu Vane Shear Test attempt
R = Rock Core Sample
SSA = Solid Stem Auger
HSA = Hollow Stem Auger
RC = Roller Cone
WOH = weight of 140lb. hammer
WOR/C = weight of rods or casing
WO1P = Weight of one person
S_u = Insitu Field Vane Shear Strength (psf)
T_v = Pocket Torvane Shear Strength (psf)
q_p = Unconfined Compressive Strength (ksf)
N-uncorrected = Raw field SPT N-value
Hammer Efficiency Factor = Annual Calibration Value
N_{60} = SPT N-uncorrected corrected for hammer efficiency
N_{60} = (Hammer Efficiency Factor/60%)*N-uncorrected
$S_{u(lab)}$ = Lab Vane Shear Strength (psf)
WC = water content, percent
LL = Liquid Limit
PL = Plastic Limit
PI = Plasticity Index
G = Grain Size Analysis
C = Consolidation Test

Sample Information

Depth (ft.)	Sample No.	Pen./Rec. (in.)	Sample Depth (ft.)	Blows (/6 in.) Shear Strength (psf) or RQD (%)	N-uncorrected	N_{60}	Casing Blows	Elevation (ft.)
0	1D	24/10	0.00 - 2.00	WOR/WOH/WOH/1	---		WOC	
1							2	
2							5	
3	2D	24/6	3.00 - 5.00	WOR/1/WOH/1	1	1	4	
4							5	
5	3D	24/9	5.00 - 7.00	2/3/3/2	6	6	3	
6							5	
7	4D	24/13	7.00 - 9.00	4/4/5/5	9	9	4	
8							4	
9							16	
10	5D	24/15	10.00 - 12.00	3/3/3/2	6	6	10	-30.60
11							9	
12	1U V1	24/22	12.00 - 14.00 12.64 - 13.00	Hydraulic Push Su=357/89 psf			OPEN	
14	6D	24/24	14.00 - 16.00	WOR/WOR/WOR/WOH	Note 2			
15	V2		15.64 - 16.00	Su=646/96 psf				
16	7D V3	24/24	16.00 - 18.00 16.64 - 17.00	WOR/WOR/WOR/W1P Su=714/69 psf	Note 2			
17	V4		17.64 - 18.00	Su=632/96 psf				
18	8D V5	24/24	18.00 - 20.00	WOR/WOR/W1P/W1P Su=632/137 psf	Note 2			
19	V6		18.64 - 19.00 19.64 - 20.00	Su=714/124 psf				
21	2U	24/24	21.00 - 23.00	Hydraulic Push				
23	9D V7	24/24	23.00 - 25.00	WOR/W1P/W1P/W1P Su=714/179 psf	Note 2			
24	V8		23.64 - 24.00 24.64 - 24.99	Su=848/156 psf				
25	10D V9	24/24	25.00 - 27.00	WOR/W1P/WOR/WOR Su=714/110 psf	Note 2			
26	V10		25.64 - 26.00 26.64 - 27.00	Su=769/124 psf				
30	3U	24/24	30.00 - 32.00	Hydraulic Push				
32	11D V11	24/6	32.00 - 34.00 32.64 - 33.00	WOR/WOR/WOR/WOR Su=659/55 psf	Note 2			
33	V12		33.64 - 34.00	Su=604/137 psf				
34	12D	24/6	34.00 - 36.00	1/3/2/3	5	5		-53.80
36	13D	24/13	36.00 - 38.00	2/4/7/8	11	11		
40	14D	24/9	40.00 - 42.00	4/9/7/8	16	16	8a	
41							20	
42							25	
43							20	
44	15D R1	5/5 54/51	44.00 - 44.42 44.70 - 49.20	50(5") RQD = 87%	---		NQ-2	-64.20
49	R2	24/22	49.20 - 51.20	RQD = 54%				
51	R3	42/42	51.20 - 54.70	RQD = 100%				
54.7								-74.50

Visual Description and Remarks / Laboratory Testing Results/ AASHTO and Unified Class.

Brown, wet, very loose, fine to medium SAND, trace gravel, trace silt, trace organics (wood chips) (Alluvium). — G#267532 A-1-b/SP WC=26.3%

Brown, wet, very loose, fine to medium SAND, trace gravel, trace silt (Alluvium).
Begin using mud at 3 ft.

Dark gray, wet, loose, fine to coarse SAND, trace gravel, trace silt (Alluvium). — G#267533 A-1-b/SP WC=22.3%

Dark gray, wet, loose, fine to medium SAND, trace gravel, trace silt (Alluvium). — G#267534 A-1-b/SP WC=19.7%

Top 9": Dark gray wet, loose, fine to medium SAND, trace coarse gravel (Alluvium).

—10.80—

Bottom 6": Gray, wet, medium stiff, Silty CLAY (Presumpscot Formation).

Gray, wet, soft, Silty CLAY, trace medium sand (Presumpscot Formation).
55x110 mm vane raw torque readings:
V1: 8.0/2.0 ft-lbs Note: may have over torqued prior to reading. torque meter not reading initially. — #225859 A-6/CL C#IP-3A LL=37, PL= 18, PI=19 WC=38%

Gray, wet, medium stiff, Silty CLAY, trace fine to medium sand (Presumpscot Formation). Lenses of Clayey SILT present.

65x130 mm vane raw torque readings:
V2: 23.0/3.5 ft-lbs
Gray, wet, medium stiff, Silty CLAY, with trace fine to medium sand (Presumpscot Formation).
65x130 mm vane raw torque readings:
V3: 26.0/2.5 ft-lbs
V4: 23.0/3.5 ft-lbs — G#267553 A-6/CL LL=36, PL= 23, PI=13 WC=38.1%
Gray, wet, medium stiff, Silty CLAY, trace black staining (Presumpscot Formation).
65x130 mm vane raw torque readings:
V5: 23.0/5.0 ft-lbs
V6: 26.0/4.5 ft-lbs

Gray, wet, Silty CLAY (Presumpscot Formation).
Driller reports stiffer than previous — #225860 A-7-6/CL C#IP-2 LL=43, PL= 19, PI=24 WC=34%

Gray, wet, medium stiff, Silty CLAY, trace medium sand (Presumpscot Formation).
55x110 mm vane raw torque readings:
V7: 16.0/4.0 ft-lbs
V8: 19.0/3.5 ft-lbs
Gray, wet, medium stiff, Clayey SILT, trace fine sand (Presumpscot Formation). Silty fine SAND lense 25.1'-25.2'.
65x130 mm vane raw torque readings:
V9: 26.0/4.0 ft-lbs
V10: 28.0/4.5 ft-lbs — G#267552 A-6/CL LL=32, PL= 19, PI=13 WC=33.1%

Gray, wet, Silty CLAY (Presumpscot Formation). — #225861 A-4/CL LL=23, PL= 13, PI=10 WC=32%

Gray, wet, medium stiff, Clayey fine SAND, some silt (Presumpscot Formation).
65x130 mm vane raw torque readings:
V11: 24.0/2.0 ft-lbs
V12: 22.0/5.0 ft-lbs V12 difficult to push, felt like sand.

—34.00—

Gray, wet, loose, Silty fine to medium SAND, some clay, trace coarse gravel (Submarine Outwash).

Gray, wet, medium dense, fine to medium SAND, trace silt, trace clay, trace gravel (Submarine Outwash). — G#267551 A-2-4/SP-SC WC=20.4%

Gray, wet, medium dense, fine to coarse SAND, little fine to coarse gravel. Sand finer with depth (Submarine Outwash).
a = Begin driven NW casing.

Top 4": Gray, wet, fine SAND, little silt (Submarine Outwash).
Bottom 1": Highly weathered fractured rock.

—44.40—

Top of Bedrock at Elev. -64.2 ft.
Roller cone ahead to 44.7 ft (Elev. -64.5 ft).
R1: Medium to light gray, fine to coarse grained, very strong to extremely strong (R5-R6), fresh to slightly weathered, banded/strongly foliated, biotite-muscovite-plagioclase-quartz GNEISS [Nehumkeag Pond Formation]. Discontinuities are close to moderately close, mostly parallel to foliation with some discordant, gentle to moderately dipping, planar, rough to very rough, with rusty mineral coatings (FeOx). Rare red garnet crystals to 0.2 inch diameter. — UCTq_p=3,319 psi
Rock Mass Quality = Good
R1: Core Times (min:sec)
44.7-45.7': (2:00)
45.7-46.7': (2:50)
46.7-47.7': (2:10)
47.7-48.7': (2:15)
48.7-49.2': (1:30) 94% Recovery
R2: Medium to light gray, fine to coarse grained, very strong to extremely strong (R5-R6), fresh to slightly weathered, banded/strongly foliated,biotite-muscovite-plagioclase GNEISS [Nehumkeag Pond Formation]. Discontinuities are very close to moderately close, mostly parallel to foliation with some discordant, gentle to moderately dipping, planar, rough to very rough, with rusty mineral coatings (FeOx). Rare red garnet crystals to 0.2 inch diameter.
Rock Mass Quality = Fair
R2: Core Times (min:sec)
49.2-50.2': (2:30)
50.2-51.2': (2:45) 92% Recovery
Picked up 0.3' of R1.
R3: Medium to light gray, fine to coarse grained, very strong to extremely strong (R5-R6), fresh to slightly weathered, banded/strongly foliated, biotite-muscovite-plagioclase-quartz GNEISS [Nehumkeag Pond Formation]. Discontinuities are moderately close, mostly parallel to foliation with some discordant, gentle to moderately dipping, planar, rough to very rough, with rusty mineral coatings (FeOx). Rare red garnet crystals to 0.2 inch diameter.
Rock Mass Quality = Excellent
R3: Core Times (min:sec)
51.2-52.2': (1:50)
52.2-53.2': (2:15)
53.2-54.2': (2:00)
54.2-54.7': (1:30) 100% Recovery
Picked up 1.3' of R2.

—54.70—

Bottom of Exploration at 54.70 feet below ground surface.

Remarks:

1. MaineDOT provided coordinates of test boring locations in NAD83 (96) ME 2000 West Zone Coordinate System and ground surface elevations in NAVD88.
2. Blow counts for spoons driven through a disturbed field vane test location cannot be used to determine N-value.
3. Shelby tubes collected using a GUS sampler.
4. Drilling mud consisting of bentonite and barite weight material was used. 5. UCTq_p = Peak compressive strength from Uniaxial Compressive

Stratification lines represent approximate boundaries between soil types; transitions may be gradual.

* Water level readings have been made at times and under conditions stated. Groundwater fluctuations may occur due to conditions other than those present at the time measurements were made.

Page 1 of 1
Boring No.: BB-RDKR-104

Maine Department of Transportation
Soil/Rock Exploration Log
US CUSTOMARY UNITS

Project: Maine Kennebec Bridge #2506	Location: Richmond-Dresden, Maine			Boring No.: BB-RDKR-206	WIN: 12674.00
Driller:	Maine Test Borings	Elevation (ft.)	-20.5	Auger ID/OD:	-
Operator:	M. Porter	Datum:	NAVD88	Sampler:	2" Split Spoon / 3" Tube
Logged By:	M. Henrick	Rig Type:	CME-45 Skid on Anchor Barge	Hammer Wt./Fall:	140/30 SS: 300/15 Cas'g
Date Start/Finish:	7/9-11/12	Drilling Method:	Cased Wash Boring with Mud	Core Barrel:	NQ-2
Boring Location:	118+29.9, 11.2 ft Lt.	Casing ID/OD:	HW/NW	Water Level*:	Water Boring - Tidal
Hammer Efficiency Factor: 0.6		Hammer Type:	Automatic ☐ Hydraulic ☐ Rope & Cathead ☒		

Definitions:
D = Split Spoon Sample
MD = Unsuccessful Split Spoon Sample attempt
U = Thin Wall Tube Sample
MU = Unsuccessful Thin Wall Tube Sample attempt
V = Insitu Vane Shear Test, PP = Pocket Penetrometer
MV = Unsuccessful Insitu Vane Shear Test attempt
R = Rock Core Sample
SSA = Solid Stem Auger
HSA = Hollow Stem Auger
RC = Roller Cone
WOH = weight of 140lb. hammer
WOR/C = weight of rods or casing
WO1P = Weight of one person
S_u = Insitu Field Vane Shear Strength (psf)
T_v = Pocket Torvane Shear Strength (psf)
q_p = Unconfined Compressive Strength (ksf)
N-uncorrected = Raw field SPT N-value
Hammer Efficiency Factor = Annual Calibration Value
N_{60} = SPT N-uncorrected corrected for hammer efficiency
N_{60} = (Hammer Efficiency Factor/60%)*N-uncorrected
$S_{u(lab)}$ = Lab Vane Shear Strength (psf)
WC = water content, percent
LL = Liquid Limit
PL = Plastic Limit
PI = Plasticity Index
G = Grain Size Analysis
C = Consolidation Test

Sample Information

Depth (ft.)	Sample No.	Pen./Rec. (in.)	Sample Depth (ft.)	Blows (/6 in.) Shear Strength (psf) or RQD (%)	N-uncorrected	N_{60}	Casing Blows	Elevation (ft.)
0	1MD	24/0	0.00 - 2.00	W1P/W2P/W2P/W2P			HP_a	
2							6	
3							7	
4							9	
5	2D	24/6	5.00 - 7.00	2/1/2/2	3	3	6	
6							14	
7	3D	24/5	7.00 - 9.00	2/7/7/3	14	14	10	
8							34	
9							47	
10	4D	24/13	10.00 - 12.00	4/4/2/1	6	6	HPa	-30.70
12	1U	24/19	12.00 - 14.00	Hydraulic Push				
14	2U	24/23	14.00 - 16.00	Hydraulic Push				
16	3U	24/24	16.00 - 18.00	Hydraulic Push				
18	4U	24/23	18.00 - 20.00	Hydraulic Push				
20	5U	24/22	20.00 - 22.00	Hydraulic Push				
22	6MU	6/0	22.00 - 22.50	Hydraulic Push				
23	7U	24/24	23.00 - 25.00	Hydraulic Push				
25	8U	24/24	25.00 - 27.00	Hydraulic Push				
27	9U	24/22	27.00 - 29.00	Hydraulic Push				
29	10U	24/24	29.00 - 31.00	Hydraulic Push				
31	11U	24/21	31.00 - 33.00	Hydraulic Push			38	
32							34	
33							28	-53.50
34							62	
35	5D	24/8	35.00 - 37.00	12/20/23/20	43	43	81	
36							145	
37							87	
38							84	
39							75	
40							73	
41							77	
42							165	
43							NW_b	
45	R1	29/29	45.20 - 47.62	RQD = 34%			NQ-2	-65.70
47	R2	20/26	47.60 - 49.27	RQD = 77%				
49	R3	62/62	49.80 - 54.97	RQD = 76%				
55								-75.50

Visual Description and Remarks / Laboratory Testing Results/ AASHTO and Unified Class.

No recovery - Resampled with 3" spoon, 1/24" recovered on second 3" spoon attempt.
Black, wet, very loose ORGANICS (wood), little coarse sand (Alluvium).
HP_a=Casing pushed with drill rig hydraulics.
River current pushing casing, drive to 5 ft.

Wood chips and medium to coarse sand in wash to 5 ft.

Brown, wet, loose, fine to coarse SAND, little gravel, trace organics (wood) (Alluvium).

Gray-brown, wet, medium dense, medium to coarse SAND, some gravel, trace silt (Alluvium).

Top 2": Gray, wet, medium to coarse SAND, trace gravel, trace silt (Alluvium).

—10.20—

Bottom 11": Gray, wet, soft, Silty CLAY, trace fine to medium sand (Presumpscot Formation).

Mud Weight = 70 pcf after wash to 12.0 ft.
Gray, wet, Silty CLAY, little fine to medium sand (Presumpscot Formation).

Mud Weight = 70 pcf after wash to 14.0 ft.
Gray, wet, Silty CLAY (Presumpscot Formation).

Mud Weight = 70 pcf after wash to 16.0 ft.
Gray, wet, Silty CLAY (Presumpscot Formation).
Sampler and sample fell down open borehole after sampling, no damage to tube observed, possible sample disturbance.
Mud Weight = 72 pcf after wash to 18.0 ft.
Gray, wet, Silty CLAY (Presumpscot Formation).

Mud Weight = 72 pcf after wash to 20.0 ft.
Gray, wet, Silty CLAY (Presumpscot Formation).

Tube stopped on gravel or sand lens at 22.5 ft. Advanced casing and washed to 23 ft. to resume sampling.
Mud Weight = 72 pcf after wash to 23 ft.
Gray, wet, Silty CLAY (Presumpscot Formation).

Mud Weight = 73 pcf after wash to 25 ft.
Gray, wet Silty CLAY (Presumpscot Formation).

Mud Weight = 73 pcf after wash to 27 ft. Cutting edge of tube damaged after deployment, sample slid freely inside tube.
Gray, wet, Silty CLAY (Presumpscot Formation).

Mud weight = 73 pcf after wash to 29 ft.
Gray, wet, Silty CLAY, trace medium sand (Presumpscot Formation).

Mud weight = 73 pcf after wash to 31 ft .
Gray, wet, Silty CLAY, little fine sand (Presumpscot Formation). Lens of fine sand 2" from top of sample seperated during tube removal. Lens of fine sand in bottom of sample.

—33.00—

Fine sand and silt in wash.

Gray, wet, dense, Sandy fine to coarse GRAVEL, little silt (Submarine Outwash). — G#267522 A-1-b, GM WC=7.0%

Lenses of gravel at 38 ft. based on drill behavior.

HW Casing refusal at 43.0 ft.
Begin NQ-2 rock core at 43.0 ft.
Cobbles and gravel observed in core barrel from 43.0 to 45.2 ft.
NW_b=Washed ahead with HW roller bit. Drive NW casing, blows not recorded.

—45.20—

NW casing refusal at 45.2 ft.
Top of Bedrock at Elev. -65.7 ft
R1: Medium dark gray (N4) to very light gray (N8), medium to coarse grained, very strong (R5), fresh to slightly weathered, banded/strongly foliated quartz-feldspar-biotite-garnet GNEISS [Nuhumkeag Pond Formation]. Discontinuities are very close to moderately close, horizontal to steep, tight, generally concordant to folidation, planar to wavy to stepped, rough to very rough. Pink garnets to 1/4" diameter common. Foliation dips 60 - 80 deg. — UCTq_p=3,951 psi
Rock Mass Quality = Poor
R1: Core Times (min:sec)
43.0-44.0': (1:55)
44.0-45.0': (1:25)
45.0-46.0': (1:35)
46.0-47.0': (2:10)
47.0-47.6': (4:15) Recovery = 100%
Core barrel plugged at 47.6 ft.
Hole collapsed to 45 ft after R1. Wash out to 47.6 ft.
R2: Medium dark gray (N4) to very light gray (N8), medium to coarse grained, very strong (R5), fresh to slightly weathered, banded/strongly foliated quartz-feldspar-biotite-garnet GNEISS [Nuhumkeag Pond Formation]. Discontinuities are very close to moderately close, horizontal to steep, tight, generally concordant to folidation, planar to wavy to stepped, rough to very rough. Pink garnets to 1/4" diameter common. Foliation dips 60 - 80 deg.
Rock Mass Quality = Good
R2: Core Times (min:sec)
47.6-48.6': (1:45)
48.6-49.6': (1:35)
49.6-49.8': (1:00) Recovery = 100%
Core Barrel plugged at 49.8 ft.
R3: Medium gray (N6) to very light gray (N8), medium to coarse grained, very strong (R5), fresh, banded/ strongly foliated, quartz-feldspar-biotite-garnet GNEISS [Nuhumkeag Pond Formation]. Discontinuities are close to very close, horizontal to steep, planar to stepped, rough to very rough. Pink garnets up to 1/8" diameter.
Rock Mass Quality = Good
R3: Core Times (min:sec)
49.8-50.8': (2:25)
50.8-51.8': (2:15)
51.8-52.8': (2:40)
52.8-53.8': (1:25)
53.8-54.8': (1:35) Recovery = 100%

—55.00—

Bottom of Exploration at 55.00 feet below ground surface.

Remarks:

1. MaineDOT provided the surveyed location of the test boring referencing Station and Offset relative to the project baseline. Ground surface elevations are based on the North American Vertical Datum of 1988 (NAVD88).
2. Shelby tubes collected using a GUS sampler.
3. UCTq_p = Peak compressive strength from Uniaxial Compressive Strength Test.

Stratification lines represent approximate boundaries between soil types; transitions may be gradual.

* Water level readings have been made at times and under conditions stated. Groundwater fluctuations may occur due to conditions other than those present at the time measurements were made.

Page 1 of 1
Boring No.: BB-RDKR-206

Maine Department of Transportation
Soil/Rock Exploration Log
US CUSTOMARY UNITS

Project: Maine Kennebec Bridge #2506	Location: Richmond-Dresden, Maine			Boring No.: BB-RDKR-207	WIN: 12674.00
Driller:	Maine Test Borings	Elevation (ft.)	-23.3	Auger ID/OD:	-
Operator:	M. Porter	Datum:	NAVD88	Sampler:	2" Split Spoon
Logged By:	M. Henrick	Rig Type:	CME-45 Skid on Anchor Barge	Hammer Wt./Fall:	140/30 SS: 300/15 Cas'g
Date Start/Finish:	7/2-3/12	Drilling Method:	Cased Wash Boring with Water	Core Barrel:	NQ-2
Boring Location:	120+43.3, 7.9 ft Lt.	Casing ID/OD:	HW/NW	Water Level*:	Water Boring - Tidal
Hammer Efficiency Factor: 0.6		Hammer Type:	Automatic ☐ Hydraulic ☐ Rope & Cathead ☒		

Definitions:
D = Split Spoon Sample
MD = Unsuccessful Split Spoon Sample attempt
U = Thin Wall Tube Sample
MU = Unsuccessful Thin Wall Tube Sample attempt
V = Insitu Vane Shear Test, PP = Pocket Penetrometer
MV = Unsuccessful Insitu Vane Shear Test attempt
R = Rock Core Sample
SSA = Solid Stem Auger
HSA = Hollow Stem Auger
RC = Roller Cone
WOH = weight of 140lb. hammer
WOR/C = weight of rods or casing
WO1P = Weight of one person
S_u = Insitu Field Vane Shear Strength (psf)
T_v = Pocket Torvane Shear Strength (psf)
q_p = Unconfined Compressive Strength (ksf)
N-uncorrected = Raw field SPT N-value
Hammer Efficiency Factor = Annual Calibration Value
N_{60} = SPT N-uncorrected corrected for hammer efficiency
N_{60} = (Hammer Efficiency Factor/60%)*N-uncorrected
$S_{u(lab)}$ = Lab Vane Shear Strength (psf)
WC = water content, percent
LL = Liquid Limit
PL = Plastic Limit
PI = Plasticity Index
G = Grain Size Analysis
C = Consolidation Test

Sample Information

Depth (ft.)	Sample No.	Pen./Rec. (in.)	Sample Depth (ft.)	Blows (/6 in.) Shear Strength (psf) or RQD (%)	N-uncorrected	N_{60}	Casing Blows	Elevation (ft.)
0							WOC	
1							HP_a	
3	1D	24/24	3.00 - 5.00	W1P/W1P/W2P/W2P	---			-26.30
7	2D V1	24/24	7.00 - 9.00 7.64 - 8.00	WOR/WOR/W1P/W1P Su=714/96 psf	Note 2			
8	V2		8.64 - 9.00	Su=714/82 psf				
10	3D V3	24/24	10.00 - 12.00 10.64 - 11.00	WOR/WOR/WOR/W1P Su=769/82 psf	Note 2			
11	V4		11.64 - 12.00	Su=810/55 psf				
12	4D V5	16/16	12.00 - 13.33 12.64 - 13.00	WOR/WOR/50(4") Su=1044/96 psf	Note 2		1	
13	MV6 R1	/? 60/60	13.00 - 13.08 13.30 - 18.30	Su=NA RQD = 48%			44_b	-36.60
14							NQ-2	
18	R2	60/56	18.30 - 23.30	RQD = 87%				
23.3								-46.60

Visual Description and Remarks / Laboratory Testing Results/ AASHTO and Unified Class.

Casing sunk into river bottom to 1.6 ft. Gray silt and sand in wash to 3.0 ft.
HP_a=Casing pushed with drill rig hydraulics.

—3.00—

Gray, wet, very soft, Silty CLAY, trace fine sand (Presumpscot Formation). Driller overdrove spoon to 5.5 ft. Sand in 1/4" lens at 3.3 ft. T_v=200,220 psf — G#267513 A-6, CL LL=33, PL= 20, PI=13 WC=37.4%

Gray with trace black staining, wet, medium stiff, Silty CLAY (Presumpscot Formation). 1" thick silt lens at 8.3 ft.
65x130mm vane raw torque readings:
V1: 26/3.5 ft-lbs
65x130mm vane raw torque readings:
V2: 26/3.0 ft-lbs — #267514 WC=32.7%

Gray, wet, medium stiff, Silty CLAY, trace fine sand (Presumpscot Formation). Sand in lenses 1/8" thick.
T_v=420, 220 psf
65x130mm vane raw torque readings:
V3: 28/3.0 ft-lbs
V4: 29.5/2.0 ft-lbs
Gray, wet, stiff, Clayey SILT, little fine sand, trace gravel (Presumpscot Formation). Increasing sand with depth. 1" of weathered rock in spoon tip.
65x130mm vane raw torque readings:
V5: 38/3.5 ft-lbs — G#267515 A-4, CL-ML LL=22, PL= 16, PI=6 WC=26.8%
MV6: Failed vane attempt. Could not push past 13.1 ft.
b=44 blows from 13.0-13.3 ft.

—13.30—

Spoon refusal at 13.3 ft.
Casing refusal at 13.3 ft.
Top of Bedrock at Elev. -36.6 ft.
R1: Medium dark gray (N4) to medium light gray (N6), fine to medium grained, strong (R4), slightly to moderately weathered, strongly foliated, biotite-quartz-feldspar-chlorite SCHIST [Nuhumkeag Pond Formation]. Discontinuities are very close to close, generally parallel to foliation planar to irregular, smooth to rough horizontal to steep, tight. Quartz veins parallel to foliation up to 1" thick. Foliation 50 deg to vertical. — UCTq_p=6,620 psi
Rock Mass Quality = Poor
R1: Core Times: (min:sec)
13.3-14.3': (4:10)
14.3-15.3': (5:20)
15.3-16.3': (2:35)
16.3-17.3': (1:50)
17.3-18.3': Not timed. Recovery = 100%
R2: Medium dark gray (N4) to medium light gray (N6), fine to medium grained, strong (R4), slightly weathered to fresh, biotite-quartz-feldspar SCHIST [Nuhumkeag Pond Formation]. Discontinuities are very close to moderately close, mostly parallel to foliation, planar, smooth to rough, horizontal to moderately dipping, tight. Foliation dipping 40 - 50 deg.
Rock Mass Quality = Good
R2: Core Times (min:sec)
18.3-19.3': (2:10)
19.3-20.3': (4:15)
20.3-21.3': (1:55)
21.3-22.3': (1:40)
22.3-23.3': (1:40) Recovery = 93%

—23.30—

Bottom of Exploration at 23.30 feet below ground surface.

Remarks:

1. MaineDOT provided the surveyed location of the test boring referencing Station and Offset relative to the project baseline. Ground surface elevations are based on the North American Vertical Datum of 1988 (NAVD88).
2. Blow counts for spoons driven through a disturbed field vane test location cannot be used to determine N-value.
3. UCTq_p = Peak compressive strength from Uniaxial Compressive Strength Test.

Stratification lines represent approximate boundaries between soil types; transitions may be gradual.

* Water level readings have been made at times and under conditions stated. Groundwater fluctuations may occur due to conditions other than those present at the time measurements were made.

Page 1 of 1
Boring No.: BB-RDKR-207

STATE OF MAINE
DEPARTMENT OF TRANSPORTATION
AC-BH-1267(400)
BRIDGE NO. 2506
WIN 12674.00
BRIDGE PLANS

	BY	DATE
PROJ. MANAGER	N. Benoit	
DESIGN-DETAILED	Team South	Team South	April 2012
CHECKED-REVIEWED	-----	-----	-----
DESIGN2-DETAILED2	L.KRUSINSKI	T.WHITE	JAN 2013
DESIGN3-DETAILED3	-----	-----	-----
REVISIONS 1	-----	-----	-----
REVISIONS 2	-----	-----	-----
REVISIONS 3	-----	-----	-----
REVISIONS 4	-----	-----	-----
FIELD CHANGES	-----	-----	-----

SIGNATURE
P.E. NUMBER
DATE

MAINE KENNEBEC BRIDGE
KENNEBEC RIVER
RICHMOND-DRESDEN SAGADAHOC-LINCOLN CTYS.

BORING LOGS

Filename: ...\031_BORING LOGS3 BRIDGE.dgn   Division: BRIDGE   Username: dana.damren   Date:3/27/2013

1

Maine Department of Transportation
Soil/Rock Exploration Log
US CUSTOMARY UNITS

Project:	Maine Kennebec Bridge #2506	Location:	Richmond-Dresden, Maine	Boring No.:	BB-RDKR-105B
				WIN:	12674.00
Driller:	Maine Test Borings	Elevation (ft.)	-19.1	Auger ID/OD:	-
Operator:	B.Enos	Datum:	NAVD88	Sampler:	3" Tube
Logged By:	M. Henrick	Rig Type:	CME-45 Skid on Anchor Barge	Hammer Wt./Fall:	-
Date Start/Finish:	12/7/11	Drilling Method:	Cased Wash Boring with Mud	Core Barrel:	NQ-2
Boring Location:	120+59.8, 14.3 ft Rt.	Casing ID/OD:	HW	Water Level*:	Water Boring - Tidal
Hammer Efficiency Factor: 0.6		Hammer Type:	Automatic ☐ Hydraulic ☐ Rope & Cathead ☒		

Definitions:
D = Split Spoon Sample
MD = Unsuccessful Split Spoon Sample attempt
U = Thin Wall Tube Sample
MU = Unsuccessful Thin Wall Tube Sample attempt
V = Insitu Vane Shear Test, PP = Pocket Penetrometer
MV = Unsuccessful Insitu Vane Shear Test attempt
R = Rock Core Sample
SSA = Solid Stem Auger
HSA = Hollow Stem Auger
RC = Roller Cone
WOH = weight of 140lb. hammer
WOR/C = weight of rods or casing
WO1P = Weight of one person
S_u = Insitu Field Vane Shear Strength (psf)
T_v = Pocket Torvane Shear Strength (psf)
q_p = Unconfined Compressive Strength (ksf)
N-uncorrected = Raw field SPT N-value
Hammer Efficiency Factor = Annual Calibration Value
N_{60} = SPT N-uncorrected corrected for hammer efficiency
N_{60} = (Hammer Efficiency Factor/60%)*N-uncorrected
$S_{u(lab)}$ = Lab Vane Shear Strength (psf)
WC = water content, percent
LL = Liquid Limit
PL = Plastic Limit
PI = Plasticity Index
G = Grain Size Analysis
C = Consolidation Test

Sample No.	Pen./Rec. (in.)	Sample Depth (ft.)	Blows (/6 in.) Shear Strength (psf) or RQD (%)	N-uncorrected	N_{60}	Casing Blows
						HPa
V1		3.64 - 4.00	Su=604/69 psf			
V2		4.64 - 5.00	Su=659/69 psf			
U1	24/23	5.00 - 7.00	Hydraulic Push			
V3		7.64 - 8.00	Su=687/82 psf			OPEN
V4		8.64 - 9.00	Su=673/82 psf			
V5		10.64 - 11.00	Su=687/82 psf			
V6		11.64 - 12.00	Su=673/82 psf			

Elevation (ft.): -19.60; -31.10

Visual Description and Remarks:
Note 2.
a HP = Hydraulic Push
Gravel based on drill behavior. — 0.50
Gray, wet, Silty CLAY.
Wash to 3' to seat casing in clay.
65x130 mm vane raw torque readings:
V1: 22.0/2.5 ft-lbs
V2: 24.0/2.5 ft-lbs
Gray, wet, medium stiff, Silty CLAY (Presumpscot Formation).
65x130 mm vane raw torque readings:
V3: 25.0/3.0 ft-lbs
V4: 24.5/3.0 ft-lbs
Wash to 10', trace gravel in wash.
65x130 mm vane raw torque readings:
V5: 25.0/3.0 ft-lbs
V6: 24.5/3.0 ft-lbs
— 12.00
Bottom of Exploration at 12.00 feet below ground surface.

Laboratory Testing Results/AASHTO and Unified Class: #225862 A-6/CL LL=39, PL=19, PI=20 WC=35%

Remarks:
1. MaineDOT provided coordinates of test boring locations in NAD83 (96) ME 2000 West Zone Coordinate System and ground surface elevations in NAVD88.
2. Supplementary boring to compliment BB-RDKR-10, with field vane shear test data in silty clay soils.
3. Shelby tubes collected using a GUS sampler.
4. Drilling mud consisting of bentonite and barite weight material was used.

Stratification lines represent approximate boundaries between soil types; transitions may be gradual.
* Water level readings have been made at times and under conditions stated. Groundwater fluctuations may occur due to conditions other than those present at the time measurements were made.

Page 1 of 1 — Boring No.: BB-RDKR-105B

2

Maine Department of Transportation
Soil/Rock Exploration Log
US CUSTOMARY UNITS

Project:	Maine Kennebec Bridge #2506	Location:	Richmond-Dresden, Maine	Boring No.:	BB-RDKR-105
				WIN:	12674.00
Driller:	Maine Test Borings	Elevation (ft.)	-18.4	Auger ID/OD:	-
Operator:	B.Enos	Datum:	NAVD88	Sampler:	2" Split Spoon / 3" Tube
Logged By:	M. Henrick	Rig Type:	CME-45 Skid on Anchor Barge	Hammer Wt./Fall:	140/30 SS; 300/15 cas'g
Date Start/Finish:	12/6-12/7/11	Drilling Method:	Cased Wash Boring with Mud	Core Barrel:	NQ-2
Boring Location:	120+60.7, 12.6 ft Rt.	Casing ID/OD:	HW/NW	Water Level*:	Water Boring - Tidal
Hammer Efficiency Factor: 0.6		Hammer Type:	Automatic ☐ Hydraulic ☐ Rope & Cathead ☒		

Definitions: D = Split Spoon Sample; MD = Unsuccessful Split Spoon Sample attempt; U = Thin Wall Tube Sample; MU = Unsuccessful Thin Wall Tube Sample attempt; V = Insitu Vane Shear Test, PP = Pocket Penetrometer; MV = Unsuccessful Insitu Vane Shear Test attempt; R = Rock Core Sample; SSA = Solid Stem Auger; HSA = Hollow Stem Auger; RC = Roller Cone; WOH = weight of 140lb. hammer; WOR/C = weight of rods or casing; WO1P = Weight of one person; S_u = Insitu Field Vane Shear Strength (psf); T_v = Pocket Torvane Shear Strength (psf); q_p = Unconfined Compressive Strength (ksf); N-uncorrected = Raw field SPT N-value; Hammer Efficiency Factor = Annual Calibration Value; N_{60} = SPT N-uncorrected corrected for hammer efficiency; N_{60} = (Hammer Efficiency Factor/60%)*N-uncorrected; $S_{u(lab)}$ = Lab Vane Shear Strength (psf); WC = water content, percent; LL = Liquid Limit; PL = Plastic Limit; PI = Plasticity Index; G = Grain Size Analysis; C = Consolidation Test

Sample No.	Pen./Rec. (in.)	Sample Depth (ft.)	Blows (/6 in.) Shear Strength (psf) or RQD (%)	N-uncorrected	N_{60}	Casing Blows
1D	24/17	0.00 - 2.00	1/2/2/WOH	4	4	12
						15
2D	24/24	2.00 - 4.00	2/WOH/WOH/WOH	---		HPa
MV1		4.00 - 4.36	Would not push			
3D MU1	24/24	5.00 - 7.00	3/WOH/WOH/WOH	Note 2		
MV2 4D MU2	24/12	8.00 - 8.36 / 8.00 - 10.00	Would not push 2/WOH/WOH/WOH	Note 2		OPEN
3U	24/24	10.00 - 12.00	Hydraulic Push			
5D MV3	23/12	12.00 - 13.92 / 12.60 - 12.96	WOR/23" Would not turn	---		
R1	60/60	14.60 - 19.60	RQD = 67%			NQ-2
R2	36/33	19.60 - 22.60	RQD = 50%			
R3	48/48	22.60 - 26.60	RQD = 56%			

Elevation (ft.): -18.80; -32.30; -45.00

Visual Description and Remarks:
Top 5" Brown-gray, wet, loose, Silty fine to medium SAND (Alluvium). — 0.40
Bottom 12": Gray, wet, Silty CLAY, trace fine sand (Presumpscot Formation).
Gray, wet, very soft, Silty CLAY, trace fine sand (Presumpscot Formation).
MV1: Would not push.
Gray with trace black staining, wet, very soft, Silty CLAY with trace fine gravel (Presumpscot Formation).
MU1: Tube unable to deploy.
MV2: Would not push.
Gray, wet, very soft, SILT, some clay, little fine sand (Presumpscot Formation). Sand in lense 1/16" thick at 10.2'.
MU2: Tube unable to deploy.
Gray, wet, Silty CLAY (Presumpscot Formation).
Gray, wet, very soft, Silty CLAY (Presumpscot Formation). Driller did not advance full 24".
MV3: Failed vane attempt. Pushed through gravel to 13' - would not turn.
— 13.90
Top of Bedrock at Elev. -32.3 ft.
Roller cone ahead to 14.6 ft (Elev. -33.0 ft).
R1: (14.5-15.2 ft) Light gray to white, coarse to very coarse grained (up to 1 inch diameter), very strong (R5) fresh to slightly weathered, massive to slightly foliated, plagioclase-quartz PEGMATITE [Nehumkeag Pond Formation]. No discontinuities.
(15.2-19.6 ft.) Medium to dark gray, fine to medium grained, very strong to extremely strong (R5-R6), fresh to slightly weathered, strongly foliated, muscovite-plagioclase-quartz-biotite SCHIST [Nehumkeag Pond Formation]. Discontinuities are very close to moderately close, mostly parallel to foliation, subhorizontal to moderately dipping, planar, undulating, rough to very rough, with some quartz veins parallel to foliation, up to 1 inch thick.
Rock Mass Quality = Fair
R1: Core Times (min:sec)
14.6-15.6': (6:10)
15.6-16.6': (4:15)
16.6-17.6': (3:05)
17.6-18.6': (3:15)
18.6-19.6': (3:15) 100% Recovery
R2: Medium to dark gray, fine to medium grained, very strong to extremely strong (R5-R6), fresh to slightly weathered, strongly foliated, muscovite-plagioclase-quartz-biotite SCHIST [Nehumkeag Pond Formation]. Discontinuities are very close to moderately close, mostly parallel to foliation, subhorizontal to moderately dipping, planar, undulating, rough to very rough, with some quartz veins parallel to foliation, up to 1 inch thick.
Rock Mass Quality = Poor
R2: Core Times (min:sec)
19.6-20.6': (3:05)
20.6-21.6': (2:30)
21.6-22.6': (2:15) 92% Recovery
Picked up 1.4' of R1
R3: Medium to dark gray, fine to medium grained, very strong to extremely strong (R5-R6), fresh to slightly weathered, strongly foliated, muscovite-plagioclase-quartz-biotite SCHIST [Nehumkeag Pond Formation]. Discontinuities are close to moderately close, mostly parallel to foliation, subhorizontal to moderately dipping, planar, undulating, rough to very rough, with some quartz veins parallel to foliation, up to 1 inch thick.
Rock Mass Quality = Fair.
R3: Core Times (min:sec)
22.6-23.6': (2:15)
23.6-24.6': (2:30)
24.6-25.6': (2:40)
25.6-26.6': (2:25) 100% Recovery
— 26.60
Bottom of Exploration at 26.60 feet below ground surface.

Laboratory Testing Results/AASHTO and Unified Class:
G#267545 A-6/CL LL=34, PL=19, PI=15 WC=6.9%
G#267546 A-6/CL LL=34, PL=21, PI=13 WC=3.5%
G#267547 A-6/CL LL=33, PL=22, PI=11 WC=7.8%
#225863 C#IP-1A A-6/CL LL=32, PL=17, PI=15 WC=40%
$PLTq_p$=11,500 psi
$UCTq_p$=5,882 psi

Remarks:
1. MaineDOT provided coordinates of test boring locations in NAD83 (96) ME 2000 West Zone Coordinate System and ground surface elevations in NAVD88. 2. Blow counts for spoons driven through a disturbed field vane test location cannot be used to determine N-value. 3. Shelby tubes collected using a GUS sampler. 4. Drilling mud consisting of bentonite and barite weight material was used. 5. $PLTq_p$ = Peak compressive strength estimated from Point Load Index Test. 6. $UCTq_p$ = Peak compressive strength from Uniaxial Compressive Strength Test.

Stratification lines represent approximate boundaries between soil types; transitions may be gradual.
* Water level readings have been made at times and under conditions stated. Groundwater fluctuations may occur due to conditions other than those present at the time measurements were made.

Page 1 of 1 — Boring No.: BB-RDKR-105

3

Maine Department of Transportation
Soil/Rock Exploration Log
US CUSTOMARY UNITS

Project:	Maine Kennebec Bridge #2506	Location:	Richmond-Dresden, Maine	Boring No.:	BB-RDKR-106B
				WIN:	12674.00
Driller:	Maine Test Borings	Elevation (ft.)	-0.1	Auger ID/OD:	-
Operator:	B.Enos	Datum:	NAVD88	Sampler:	2" Split Spoon
Logged By:	M. Henrick	Rig Type:	CME-45 Skid on Anchor Barge	Hammer Wt./Fall:	140/30 SS; 300/15 cas'g
Date Start/Finish:	12/5-12/6/11	Drilling Method:	Cased Wash Boring with Mud	Core Barrel:	NQ-2
Boring Location:	122+95.9, 7.1 ft Rt.	Casing ID/OD:	NW	Water Level*:	Water Boring - Tidal
Hammer Efficiency Factor: 0.6		Hammer Type:	Automatic ☐ Hydraulic ☐ Rope & Cathead ☒		

Definitions: D = Split Spoon Sample; MD = Unsuccessful Split Spoon Sample attempt; U = Thin Wall Tube Sample; MU = Unsuccessful Thin Wall Tube Sample attempt; V = Insitu Vane Shear Test, PP = Pocket Penetrometer; MV = Unsuccessful Insitu Vane Shear Test attempt; R = Rock Core Sample; SSA = Solid Stem Auger; HSA = Hollow Stem Auger; RC = Roller Cone; WOH = weight of 140lb. hammer; WOR/C = weight of rods or casing; WO1P = Weight of one person; S_u = Insitu Field Vane Shear Strength (psf); T_v = Pocket Torvane Shear Strength (psf); q_p = Unconfined Compressive Strength (ksf); N-uncorrected = Raw field SPT N-value; Hammer Efficiency Factor = Annual Calibration Value; N_{60} = SPT N-uncorrected corrected for hammer efficiency; N_{60} = (Hammer Efficiency Factor/60%)*N-uncorrected; $S_{u(lab)}$ = Lab Vane Shear Strength (psf); WC = water content, percent; LL = Liquid Limit; PL = Plastic Limit; PI = Plasticity Index; G = Grain Size Analysis; C = Consolidation Test

Sample No.	Pen./Rec. (in.)	Sample Depth (ft.)	Blows (/6 in.) Shear Strength (psf) or RQD (%)	N-uncorrected	N_{60}	Casing Blows
						CWBa
						10
1D	24/13	15.00 - 17.00	11/7/4/8	11	11	29
						17
2D	24/9	17.00 - 19.00	14/11/10/12	21	21	24
						24
						32
3D	22/13	20.00 - 21.83	10/15/25/50(4")	40	40	25
						59
R1	24/0	22.00 - 24.00	RQD = N/A			33
						37
						117
4D	6/6	25.20 - 25.70	63(6")	---		53
R2	29/5	26.60 - 29.02	RQD = N/A			98
						21
						50b
R3	6/4	29.00 - 29.50	RQD = N/A			
R4	62/62	30.00 - 35.17	RQD = 66%			
R5	58/58	35.20 - 40.03	RQD= 95%			

Elevation (ft.): -18.60; -29.60; -40.10

Visual Description and Remarks:
Continuation from BB-RDKR-106 (Note 2)
a= Cased wash boring, blows not recorded.
HW Casing refusal at 14 feet, driller suspects steeply inclined boulder surface based on casing/drill behavior. Begin NW Casing. Roller cone through rock 14.0-14.8'.
Light brown, wet, medium dense, fine to coarse SAND, some silt, little gravel, trace clay (Marine Nearshore Deposits).
Top 7": Light brown, wet, medium dense fine to coarse SAND, little silt, trace gravel (Marine Nearshore Deposits).
— 18.50
Bottom 2": Gray, wet, medium dense, fine to coarse SAND, little silt, trace gravel (Glacial Till).
Gray, wet, dense fine to coarse SAND, some gravel, little silt (Glacial Till).
Boulder
R1: Core Times (min:sec)
22.0-21.0': (2:25)
21.0-22.0': (1:05) 0% Recovery
Cobble based on drill behavior 24.6-25.1'.
Gray, wet, very dense SILT, some gravel, some fine to coarse sand, trace clay (Glacial Till).
Casing refusal at 26.2', roller cone ahead to 26.6'
Boulder
R2: Core Times (min:sec)
26.2-26.6': (2:37)
26.6-27.6': (1:40)
27.6-29.0': (1:02) 17% Recovery
Cobbles/gravel plugged core barrel
Casing refusal on cobble at 28.8 ft.
b = blows counted for 28-28.8'.
Cobble
R3: Core times (min:sec)
29.0-29.5' (4:05)
— 29.50
Top of Bedrock at Elev. -29.6 ft.
Roller cone ahead to 30.0 ft (Elev. -30.1 ft).
R4: (30.0-31.7 ft.) Light gray, fine to medium grained, very strong to extremely strong (R5-R6), fresh to slightly weathered, slightly foliated, plagioclase-quartz SCHIST [Nehumkeag Pond Formation]. Discontinuities are very close to moderately close, subhorizontal to moderately dipping, planar to irregular, rough with dark green to black mineral coatings (MnOx).
(31.7-33.1 ft.) Light gray to white, medium to very coarse grained, extremely strong (R6), fresh, massive to slightly foliated, plagioclase-quartz PEGMATITE [Nehumkeag Pond Formation]. Discontinuities are close to very close, subhorizontal to moderately dipping, planar and rough to very rough.
(33.1-35.0 ft) Light to medium gray, fine to medium grained, very strong to extremely strong (R5-R6), fresh, banded/strongly foliated, biotite-muscovite-plagioclase-quartz GNEISS [Nehumkeag Pond Formation]. Discontinuities are very close to moderately close, subhorizontal to gently dipping, planar and rough to very rough. Rare red garnet crystals to 0.2 inch diameter.
Rock Mass Quality = Fair.
R4: Core Times (min:sec)
30.0-31.0': (3:45)
31.0-32.0': (3:40)
32.0-33.0': (4:00)
33.0-34.0': (3:30)
34.0-35.2': (3:55) 100% Recovery
R5: Light to medium gray, fine to medium grained, very strong to extremely strong (R5-R6), fresh, banded/strongly foliated, biotite-muscovite-plagioclase-quartz GNEISS [Nehumkeag Pond Formation]. Discontinuities are moderately close, subhorizontal to gently dipping, planar and rough to very rough. Rare red garnet crystals to 0.2 inch diameter.
Rock Mass Quality = Excellent
R5: Core Times (min:sec)
35.2-36.2': (2:00)
36.2-37.2': (2:30)
37.2-38.2': (2:50)
38.2-39.2': (2:30)
39.2-40.0': (3:15) 100% Recovery
— 40.00
Bottom of Exploration at 40.00 feet below ground surface.

Laboratory Testing Results/AASHTO and Unified Class:
G#267541 A-4/SC-SM WC=6.0%
G#267542 A-1-b/SM WC=8.4%
G#267544 A-4/SC-SM WC=11.1%
$UCTq_p$=27,924 psi

Remarks:
1. MaineDOT provided coordinates of test boring locations in NAD83 (96) ME 2000 West Zone Coordinate System and ground surface elevations in NAVD88.
2. Continuation of BB-RDKR-106. BB-RDKR-106 terminated at 14.0 ft due to broken NW casing.
3. $UCTq_p$ = Peak compressive strength from Uniaxial Compressive Strength Test.

Stratification lines represent approximate boundaries between soil types; transitions may be gradual.
* Water level readings have been made at times and under conditions stated. Groundwater fluctuations may occur due to conditions other than those present at the time measurements were made.

Page 1 of 1 — Boring No.: BB-RDKR-106B

4

Maine Department of Transportation
Soil/Rock Exploration Log
US CUSTOMARY UNITS

Project:	Maine Kennebec Bridge #2506	Location:	Richmond-Dresden, Maine	Boring No.:	BB-RDKR-106
				WIN:	12674.00
Driller:	Maine Test Borings	Elevation (ft.)	-0.3	Auger ID/OD:	-
Operator:	B.Enos	Datum:	NAVD88	Sampler:	2" Split Spoon
Logged By:	M. Henrick	Rig Type:	CME-45 Skid on Anchor Barge	Hammer Wt./Fall:	140/30 SS; 300/15 cas'g
Date Start/Finish:	12/5/11	Drilling Method:	Cased Wash Boring with Water	Core Barrel:	NQ-2
Boring Location:	122+95.5, 6.5 ft Rt.	Casing ID/OD:	NW	Water Level*:	Water Boring - Tidal
Hammer Efficiency Factor: 0.6		Hammer Type:	Automatic ☐ Hydraulic ☐ Rope & Cathead ☒		

Definitions: D = Split Spoon Sample; MD = Unsuccessful Split Spoon Sample attempt; U = Thin Wall Tube Sample; MU = Unsuccessful Thin Wall Tube Sample attempt; V = Insitu Vane Shear Test, PP = Pocket Penetrometer; MV = Unsuccessful Insitu Vane Shear Test attempt; R = Rock Core Sample; SSA = Solid Stem Auger; HSA = Hollow Stem Auger; RC = Roller Cone; WOH = weight of 140lb. hammer; WOR/C = weight of rods or casing; WO1P = Weight of one person; S_u = Insitu Field Vane Shear Strength (psf); T_v = Pocket Torvane Shear Strength (psf); q_p = Unconfined Compressive Strength (ksf); N-uncorrected = Raw field SPT N-value; Hammer Efficiency Factor = Annual Calibration Value; N_{60} = SPT N-uncorrected corrected for hammer efficiency; N_{60} = (Hammer Efficiency Factor/60%)*N-uncorrected; $S_{u(lab)}$ = Lab Vane Shear Strength (psf); WC = water content, percent; LL = Liquid Limit; PL = Plastic Limit; PI = Plasticity Index; G = Grain Size Analysis; C = Consolidation Test

Sample No.	Pen./Rec. (in.)	Sample Depth (ft.)	Blows (/6 in.) Shear Strength (psf) or RQD (%)	N-uncorrected	N_{60}	Casing Blows
1D	24/14	0.00 - 2.00	WOR/1/3/12	4	4	1
						14
2D	24/10	2.00 - 4.00	9/10/20/17	30	30	13
						25
3D	24/4	4.00 - 6.00	11/13/24/22	37	37	20
						37
4D	24/10	6.00 - 8.00	19/16/11/6	27	27	36
						17
						30
5D	24/3	9.00 - 11.00	5/4/5/5	9	9	16
						28
						31
6D	24/8	12.00 - 14.00	10/8/7/22	15	15	

Elevation (ft.): -0.50; -14.30

Visual Description and Remarks:
Top 2": Dark gray brown, wet, very soft, SILT, little organics (roots) (Alluvium). — 0.20
Bottom 12": Gray-brown, wet, soft, fine Sandy SILT, trace organics (roots), trace gravel, trace clay (Marine Nearshore Deposits).
Gray to light brown, wet, medium dense, fine to coarse SAND, some silt, little clay, trace gravel (Marine Nearshore Deposits).
Light brown, wet, dense, fine to coarse SAND, some gravel, little silt, trace clay (Marine Nearshore Deposits).
Top 2": Light brown, wet, dense, fine to coarse SAND, some silt, little gravel (Marine Nearshore Deposits). Gravel in wash.
Bottom 8": Gray, wet, medium dense, fine to coarse GRAVEL, little fine to coarse sand, trace silt, trace clay (Marine Nearshore Deposits).
Gray, wet, loose, SILT, little gravel, trace fine to coarse sand, trace clay (Marine Nearshore Deposits).
Gray and light brown, wet, medium dense, fine to coarse SAND, some gravel, some silt, trace clay (Marine Nearshore Deposits).
— 14.00
Bottom of Exploration at 14.00 feet below ground surface.
Note 2.

Laboratory Testing Results/AASHTO and Unified Class:
G#267535 A-4/ML Non-Plastic WC=9.2% Org. Cont. = 3.4%
G#267536 A-4/SC-SM Non-Plastic WC=12.5%
G#267537 A-1-b/SC-SM WC=12.5%
G#267538 A-1-a/SP WC=12.1%
G#267539 A-4/SC-SM WC=19.4%
G#267540 A-2-4/SC-SM WC=4.5%

Remarks:
1. MaineDOT provided coordinates of test boring locations in NAD83 (96) ME 2000 West Zone Coordinate System and ground surface elevations in NAVD88.
2. 3" Casing broke at 7' after drilling to 12'. End of BB-RKDR-106, see BB-RDKR-106B. 5 ft. of NW casing abandoned in place at 7 to 12 ft.

Stratification lines represent approximate boundaries between soil types; transitions may be gradual.
* Water level readings have been made at times and under conditions stated. Groundwater fluctuations may occur due to conditions other than those present at the time measurements were made.

Page 1 of 1 — Boring No.: BB-RDKR-106

5

Maine Department of Transportation
Soil/Rock Exploration Log
US CUSTOMARY UNITS

Project:	Maine Kennebec Bridge #2506	Location:	Richmond-Dresden, Maine	Boring No.:	BB-RDKR-208
				WIN:	12674.00
Driller:	Maine Test Borings	Elevation (ft.)	-0.2	Auger ID/OD:	-
Operator:	M. Porter	Datum:	NAVD88	Sampler:	2" Split Spoon
Logged By:	M. Henrick	Rig Type:	CME-45 Skid on Anchor Barge	Hammer Wt./Fall:	140/30 SS; 300/15 Cas'g
Date Start/Finish:	7/5-6/12	Drilling Method:	Cased Wash Boring with Water	Core Barrel:	NQ-2
Boring Location:	123+11.8, 17.2 ft Lt.	Casing ID/OD:	HW/NW	Water Level*:	Water Boring - Tidal
Hammer Efficiency Factor: 0.6		Hammer Type:	Automatic ☐ Hydraulic ☐ Rope & Cathead ☒		

Definitions: D = Split Spoon Sample; MD = Unsuccessful Split Spoon Sample attempt; U = Thin Wall Tube Sample; MU = Unsuccessful Thin Wall Tube Sample attempt; V = Insitu Vane Shear Test, PP = Pocket Penetrometer; MV = Unsuccessful Insitu Vane Shear Test attempt; R = Rock Core Sample; SSA = Solid Stem Auger; HSA = Hollow Stem Auger; RC = Roller Cone; WOH = weight of 140lb. hammer; WOR/C = weight of rods or casing; WO1P = Weight of one person; S_u = Insitu Field Vane Shear Strength (psf); T_v = Pocket Torvane Shear Strength (psf); q_p = Unconfined Compressive Strength (ksf); N-uncorrected = Raw field SPT N-value; Hammer Efficiency Factor = Annual Calibration Value; N_{60} = SPT N-uncorrected corrected for hammer efficiency; N_{60} = (Hammer Efficiency Factor/60%)*N-uncorrected; $S_{u(lab)}$ = Lab Vane Shear Strength (psf); WC = water content, percent; LL = Liquid Limit; PL = Plastic Limit; PI = Plasticity Index; G = Grain Size Analysis; C = Consolidation Test

Sample No.	Pen./Rec. (in.)	Sample Depth (ft.)	Blows (/6 in.) Shear Strength (psf) or RQD (%)	N-uncorrected	N_{60}	Casing Blows
1D	24/6	0.00 - 2.00	3/7/11/9	18	18	HPa
						21
2D	24/15	2.00 - 4.00	3/6/8/9	14	14	20
						34
						77
3D	24/12	5.20 - 7.20	21/17/18/21	35	35	27
						96
						99
4D	24/13	8.00 - 10.00	14/25/17/11	42	42	67
						63
5D	24/12	10.00 - 12.00	10/8/11/17	19	19	40
						63
6D	21/14	12.00 - 13.75	14/48/51/50(3")	99	99	84
						146b
R1	48/0	14.00 - 18.00	RQD = NA%			WOC
						24
						58
						96
						170
R2	36/14	19.10 - 22.10	RQD = NA%			OPEN
						35
						102
7MD	5/0	23.00 - 23.42	100(5")			38
						145
8MD	1/0	25.00 - 25.08	50(1")			NR
R3	28/10	27.60 - 29.93	RQD = 36%			NQ-2
R4	48/41	29.90 - 33.90	RQD = 35%			
R5	54/54	33.90 - 38.40	RQD = 20%			
R6	60/59	38.40 - 43.40	RQD = 43%			

Elevation (ft.): -10.20; -28.00; -43.60

Visual Description and Remarks:
Gray, wet, medium dense, Silty fine SAND, little organics (bark, roots) (Marine Nearshore Deposits).
Decreasing silt with depth.
HPa=Casing pushed with drill rig hydraulics.
Gravel in lenses from 1 to 2 ft. based on drill behavior.
Brown and gray mottled, wet, medium dense, fine to medium SAND, some silt, some gravel, trace coarse sand (Marine Nearshore Deposits).
Gravel at 4.5 ft., lost water return at 5.0 ft, washed to 5.2 ft.
Gray, wet, dense, fine SAND, some gravel, little silt, trace clay (Marine Nearshore Deposits).
Brown, wet, dense, fine to coarse SAND, some gravel, little silt (Marine Nearshore Deposits).
— 10.00
Gray, wet, medium dense, fine to medium SAND, some gravel, some silt, trace clay (Glacial Till).
Gray, wet, very dense, fine SAND, some gravel, trace coarse sand, trace silt (Glacial Till). 2" gravel lens in bottom of spoon.
b=Casing refusal at 13.7 ft. on cobble. Driller washes ahead to 14.0 ft.
R1: Pieces of cobbles and gravel recovered.
R1: Core Times: (min:sec)
14.0-15.0': (3:20)
15.0-16.0': (3:50)
16.0-17.0': (1:10)
17.0-18.0': (2:30) Recovery = 0%
Sand in return from approximately 15-18 ft.
Casing refusal at 19.0 ft. wash ahead to 19.1 ft.
R2: Boulder 19.0-20.2 ft. Sand in wash 20.2-23 ft.
R2: Core Times: (min:sec)
19.1-20.1': (1:50)
20.1-21.1': (0:55)
21.1-22.1': (0:45) Recovery = 39%
Pull NW casing and advance HW casing and roller bit through boulder to 23.0 ft. Boring stayed open to 21.5 ft. Resume driving NW.
Spoon refusal on cobble based on drill behavior.
Spoon refusal on boulder at 25.1 ft.
Wash ahead of casing to 27.6 ft through boulder.
R3: 27.6-27.8': Cobble.
— 27.80
Top of Bedrock at Elev. -28.0 ft.
R3: 27.8-29.9': Medium dark gray (N4) to dark greenish gray (5GY 4/1), very fine to fine grained, medium weak (R3) moderately weathered, moderately foliated, biotite-quartz SCHIST [Nuhumkeag Pond Formation]. Discontinuities are very close to close, moderately dipping to vertical planar to rough, tight. Contact metamorphosed by basalt dike below.
Rock Mass Quality = Poor
R3: Core Times (min:sec)
27.6-28.6': (2:05)
28.6-29.6': (2:15)
29.6-29.9': (2:00) Recovery = 38%
Core barrel plugged at 29.9 ft.
R4: 29.9 - 30.4 ft.: Dark greenish gray (5GY 4/1), very fine grained, weak (R2), moderately to highly weathered, non-foliated, BASALT [Mesozoic Intrusives]. Discontinuities are very close, moderately dipping to steep, planar, smooth to rough.
30.4 - 33.9 ft.: Medium gray (N5) to dark greenish gray (5GY 4/1), fine grained, weak (R2) to medium weak (R3), moderately to highly weathered, foliated, quartz-biotite GNEISS [Nuhumkeag Pond Formation], contact metamorphized by basalt dike above. Discontinuities are very close, horizontal to steep, planar to irregular, smooth to rough with FeOx staining.
Rock Mass Quality = Poor
R4: Core Times (min:sec)
29.9-30.9': (1:15)
30.9-31.9': (1:10)
31.9-32.9': (1:50)
32.9-33.9': (1:30) Recovery = 85%
R5: 33.9 - 35.0 ft.: Grayish black (N2) to light gray (N7), fine grained, medium weak (R3), moderately weathered, moderately foliated, biotite-quartz GNEISS [Nuhumkeag Pond Formation], contact metamorphosed by basalt dike below. Discontinuities are very close to close, planar to stepped to irregular, moderately weathered, horizontal to steep, tight to open, with rusty mineral coating (FeOx).
35.0 - 37.5 ft.: Dark gray (N3) to olive gray (5Y 4/1), very fine grained very weak (R2), moderately to highly weathered, non-foliated BASALT [Mesozoic Intrusives]. Discontinuities are very close, planar to irregular, horizontal to vertical with rusty mineral coatings (FeOx). Contains inclusions of highly altered gneiss wallrock (xenoliths).
37.5 - 38.4 ft.: Grayish black (N2) to light gray (N7), fine grained, medium weak (R3), moderately weathered, moderately foliated, biotite-quartz GNEISS [Nuhumkeag Pond Formation], contact metamorphosed by basalt dike above. Discontinuities are very close to close, planar to stepped to irregular, horizontal to steep, tight to open, with rusty mineral coating (FeOx).
Rock Mass Quality = Very Poor
R5: Core Times (min:sec)
33.9-34.9': (1:35)
34.9-35.9': (1:40)
35.9-36.9': (2:05)
36.9-37.9': (3:05)
37.9-38.4': (2:00) Recovery = 100%
Core barrel plugged at 38.4 ft.
R6: 38.4 - 40.2 ft.: Medium light gray (N6) to light gray (N7), fine to coarse grained, weak to strong (R3-R4), moderately weathered, strongly foliated/banded, quartz-feldspar-biotite-garnet GNEISS [Nuhumkeag Pond Formation]., hydrothermally altered by basalt dikes.
40.2 - 40.6 ft.: Dark gray, very fine grained very weak (R2), moderately to highly weathered BASALT [Mesozoic Intrusives]. No discontinuities.
40.6 - 43.4 ft.: Medium light gray (N6) to light gray (N7), fine to coarse grained, weak to strong (R3-R4), moderately weathered, strongly foliated/banded, quartz-feldspar-biotite-garnet GNEISS [Nuhumkeag Pond Formation]. Discontinuities are very close to close, moderately dipping to steep, planar to irregular to stepped, rough, tight to open. Thin white quartzite vein at 38.8 ft., 1/4" thick, steeply dipping. Garnets up to 1/4" diameter.
Rock Mass Quality = Poor
R6: Core Times (min:sec)
38.4-39.4': (5:53)
39.4-40.4': (2:15)
40.4-41.4': (1:20)
41.4-42.4': (2:40) Recovery = 98%
— 43.40
Bottom of Exploration at 43.40 feet below ground surface.

Laboratory Testing Results/AASHTO and Unified Class:
G#267516 A-2-4, SC-SM WC=12.8%
G#267517 A-1-b, SC-SM WC=10.8%
G#267518 A-2-4, SC-SM WC=9.1%
$PLTq_p$=13,200 psi
$UCTq_p$=4,859 psi

Remarks:
1. MaineDOT provided the surveyed location of the test boring referencing Station and Offset relative to the project baseline. Ground surface elevations are based on the North American Vertical Datum of 1988 (NAVD88).
2. Blow counts for spoons driven through a disturbed field vane test location cannot be used to determine N-value.
3. $PLTq_p$ = Peak compressive strength estimated from Point Load Index Test.
4. $UCTq_p$ = Peak compressive strength from Uniaxial Compressive Strength Test.

Stratification lines represent approximate boundaries between soil types; transitions may be gradual.
* Water level readings have been made at times and under conditions stated. Groundwater fluctuations may occur due to conditions other than those present at the time measurements were made.

Page 1 of 1 — Boring No.: BB-RDKR-208

STATE OF MAINE
DEPARTMENT OF TRANSPORTATION
AC-BH-1267(400)
BRIDGE PLANS
WIN 12674.00
BRIDGE NO. 2506

		BY	DATE
PROJ. MANAGER	N. Benoit		
DESIGN-DETAILED	Team South	Team South	April 2012
CHECKED-REVIEWED	-----	-----	-----
DESIGN2-DETAILED2	L.KRUSINSKI	T.WHITE	JAN 2013
DESIGN3-DETAILED3	-----	-----	-----
REVISIONS 1	-----	-----	-----
REVISIONS 2	-----	-----	-----
REVISIONS 3	-----	-----	-----
REVISIONS 4	-----	-----	-----
FIELD CHANGES	-----	-----	-----

SIGNATURE
P.E. NUMBER
DATE

MAINE KENNEBEC BRIDGE
KENNEBEC RIVER
RICHMOND-DRESDEN SAGADAHOC-LINCOLN CTYS.

BORING LOGS

SHEET NUMBER
31
OF 238

Filename: ...\032_BORING LOGS4 BRIDGE.dgn Division: BRIDGE Username: dana.damren Date:3/27/2013

1

Maine Department of Transportation
Soil/Rock Exploration Log
US CUSTOMARY UNITS

Project: Maine Kennebec Bridge #2506
Locations Richmond-Dresden, Maine

Boring No.: BB-RDKR-107
WIN: 12674.00

Driller:	Maine Test Borings	Elevation (ft.)	8.8	Auger ID/OD:	4"
Operator:	T. Schaefer	Datum:	NAVD88	Sampler:	2" Split Spoon
Logged By:	W. Henrick	Rig Type:	Mobile B-53 Track	Hammer Wt./Fall:	140/30 SS; 300/15 cas'g
Date Start/Finish:	12/8/11	Drilling Method:	Cased Wash Boring with Water	Core Barrel:	NQ-2
Boring Location:	124+14.3, 2.5 ft Lt.	Casing ID/OD:	HW/HW	Water Level*:	4.7 ft. on 12/8/11 1500
Hammer Efficiency Factor: 0.6		Hammer Type:	Automatic ☐ Hydraulic ☐ Rope & Cathead ☒		

Definitions:
D = Split Spoon Sample; MD = Unsuccessful Split Spoon Sample attempt; U = Thin Wall Tube Sample; MU = Unsuccessful Thin Wall Tube Sample attempt; V = Insitu Vane Shear Test; MV = Unsuccessful Insitu Vane Shear Test attempt; R = Rock Core Sample; SSA = Solid Stem Auger; HSA = Hollow Stem Auger; RC = Roller Cone; WOH = weight of 140lb. hammer; WOR = weight of rods or casing; S_u = Insitu Field Vane Shear Strength (psf); S_r = Pocket Torvane Shear Strength (psf); q_u = Unconfined Compressive Strength (ksf); N-uncorrected = Raw Field SPT N-value; Hammer Efficiency Factor = Annual Calibration Value; N_{60} = SPT N-uncorrected corrected for hammer efficiency; N_{60} = (Hammer Efficiency Factor/60%)*N-uncorrected; $S_{u(lab)}$ = Lab Vane Shear Strength (psf); WC = water content, percent; LL = Liquid Limit; PL = Plastic Limit; PI = Plasticity Index; G = Grain Size Analysis; C = Consolidation Test

Depth (ft.)	Sample No.	Pen./Rec. (in.)	Sample Depth (ft.)	Blows (/6 in.) Shear Strength (psf) or RQD (%)	N-uncorrected	N_{60}	Casing Blows	Elevation (ft.)	Graphic Log	Visual Description and Remarks	Laboratory Testing Results/ AASHTO and Unified Class
0							SSA				
	10	24/17	1.00 - 3.00	2/2/2/3	4	4				Brown, damp, very loose, SAND, little silt, trace clay, trace organics (roots) (Fill).	GM267550 A-2-4/SC-SM WC=8.3%
	20	24/16	3.00 - 5.00	1/2/3/4	5	5				Brown, damp, medium stiff, SILT, some fine to medium sand, trace clay (Fill).	GM267554 A-4/ML WC=4.9%
5	30	24/21	5.00 - 7.00	3/5/7/8	12	12	HP3	3.05		Top 9"; Brown, damp, medium dense, fine to medium Silty SAND, trace clay (Fill). HP3 = Hydraulic Probe to 6.7 ft.	GM267555 A-4/SC-SM WC=13.6%
							T0			Bottom 12"; Light gray, wet, medium dense, fine to medium SAND, some silt, (Marine Nearshore Deposits). b = Blows from 6.7 to 7.0 ft.	
							23			Gray, wet, dense, Gravelly fine to coarse SAND, little silt (Marine Nearshore Deposits).	GM267556 A-1-b/SM WC=10.3%
							52			Cobble at 10', washed ahead of casing to 10.5'.	
10	50	24/7	10.50 - 12.50	10/9/6/8	15	15	26			Gray, wet, medium dense, fine to coarse SAND, some gravel, little silt (Marine Nearshore Deposits).	GM267557 A-1-b/SM WC=13.5%
							21				
							18			Top 2"; Gray, wet, fine SAND, trace silt (Marine Nearshore Deposits).	
	60	13/10	13.00 - 14.08	5/15/50(1")	---		22			Bottom 8"; Gray with red-brown staining on bottom 4", wet, medium to coarse SAND, little gravel, little silt (Marine Nearshore Deposits). Cobbles to 15.7', washed ahead of casing. 1" = 50 casing blows from 15-15.1'.	GM267558 A-1-b/SM WC=13.1%
							115				
							50/ NQ-2				
15	R1	60/59	16.00 - 21.00	RQD = 97%				-6.90		Bedrock encountered at Elev. -6.9 ft. Roller cone ahead to 16.0 ft (Elev. -7.2 ft). R1; Medium to light gray, fine to medium grained, very strong to extremely strong (R5-R6), fresh to slightly weathered, banded/strongly foliated, interbedded muscovite-quartz biotite SCHIST and muscovite-biotite-plagioclase-quartz GNEISS [Nehumkeag Pond Formation]. Discontinuities are close to moderately close, mostly parallel to foliation with some discordant, mostly steeply dipping, planar to stepped, and very rough. Rock Mass Quality = Excellent R1; Core Times (minsec) 16.0-17.0'; (2:01) 17.0-18.0'; (1:25) 18.0-19.0'; (2:40) 19.0-20.0'; (2:15) 20.0-21.0'; (1:30) 98% Recovery	PLT_{50}=12,400 psi
20	R2	60/61	21.00 - 26.00	RQD = 100%				-17.20		Bottom of Exploration at 26.00 feet below ground surface.	
25											
30											
35											
40											
45											
50											

Remarks:
1. MaineDOT provided coordinates of test boring locations in NAD83 (96) ME 2000 West Zone Coordinate System and ground surface elevations in NAVD88.
2. PLT_{50} = Peak compressive strength estimated from Point Load Index Test.

Stratification lines represent approximate boundaries between soil types; transitions may be gradual.
* Water level readings have been made at times and under conditions stated. Groundwater fluctuations may occur due to conditions other than those present at the time measurements were made.

Page 1 of 1
Boring No.: BB-RDKR-107

2

Maine Department of Transportation
Soil/Rock Exploration Log
US CUSTOMARY UNITS

Project: Maine Kennebec Bridge #2506
Locations Richmond-Dresden, Maine

Boring No.: BB-RDKR-209
WIN: 12674.00

Driller:	Maine Test Borings	Elevation (ft.)	7.3	Auger ID/OD:	4.5"
Operator:	R. Leonard	Datum:	NAVD88	Sampler:	2" Split Spoon
Logged By:	W. Henrick	Rig Type:	Mobile B-53 Track	Hammer Wt./Fall:	140/30 SS
Date Start/Finish:	5/31/12	Drilling Method:	SSA	Core Barrel:	NQ-2
Boring Location:	124+97.3, 8.0 ft Rt.	Casing ID/OD:	HW/HW	Water Level*:	1.2
Hammer Efficiency Factor: 0.6		Hammer Type:	Automatic ☐ Hydraulic ☐ Rope & Cathead ☒		

Definitions:
D = Split Spoon Sample; MD = Unsuccessful Split Spoon Sample attempt; U = Thin Wall Tube Sample; MU = Unsuccessful Thin Wall Tube Sample attempt; V = Insitu Vane Shear Test; MV = Unsuccessful Insitu Vane Shear Test attempt; R = Rock Core Sample; SSA = Solid Stem Auger; HSA = Hollow Stem Auger; RC = Roller Cone; WOH = weight of 140lb. hammer; WOR = weight of rods or casing; S_u = Insitu Field Vane Shear Strength (psf); S_r = Pocket Torvane Shear Strength (psf); q_u = Unconfined Compressive Strength (ksf); N-uncorrected = Raw Field SPT N-value; Hammer Efficiency Factor = Annual Calibration Value; N_{60} = SPT N-uncorrected corrected for hammer efficiency; N_{60} = (Hammer Efficiency Factor/60%)*N-uncorrected; $S_{u(lab)}$ = Lab Vane Shear Strength (psf); WC = water content, percent; LL = Liquid Limit; PL = Plastic Limit; PI = Plasticity Index; G = Grain Size Analysis; C = Consolidation Test

Depth (ft.)	Sample No.	Pen./Rec. (in.)	Sample Depth (ft.)	Blows (/6 in.) Shear Strength (psf) or RQD (%)	N-uncorrected	N_{60}	Casing Blows	Elevation (ft.)	Graphic Log	Visual Description and Remarks	Laboratory Testing Results/ AASHTO and Unified Class
0							SSA				
	10	24/20	1.00 - 3.00	1/WOH/2/2	2	2		6.30		Light brown, moist, very loose, SILT, some fine sand, trace clay, trace organics (roots) (Marine Nearshore Deposits).	GM267598 A-4 ML WC=39.6%
	20	24/24	3.00 - 5.00	WOH/1/1/2	2	2				Light brown with red brown mottling, very loose, fine Sandy SILT, trace clay, trace organics (roots) (Marine Nearshore Deposits).	Org. Cont.= 1.1% GM267582 A-4, ML WC=30.1%
5	30 R1	1/1 58/48	5.00 - 5.08 10.00 - 10.03	50(1") RQD = 60%	---		NQ-2	2.20 2.10		Refusal on spoon at 5.1'. Advance roller bit to 5.2'. Top of bedrock at Elev. 2.2 ft. R1; Pinkish gray (5YR 8/1) to medium gray (N5), fine to very coarse grained, medium weak to strong (R3-R4), moderately to slightly weathered, strongly foliated quartz-biotite-feldspar GNEISS [Nehumkeag Pond Formation]. Discontinuities are very close to moderately close, horizontal to vertical, planar to stepped, rough to very rough, discordant and concordant to foliation with some FeOx staining. Foliation dipping 60° - 90 deg. Rock Mass Quality = Fair R1; Core Times (minsec) 5.2-6.2'; (2:00) 6.2-7.2'; (1:25) 7.2-8.2'; (1:20) 8.2-9.2'; (1:50) 9.2-10.0'; (4:05) Recovery = 83% R2; Light Gray (N7) to medium light gray (N6), fine to medium grained, medium weak to strong (R3-R4), moderately to slightly weathered, strongly foliated, quartz-biotite-feldspar GNEISS [Nehumkeag Pond Formation]. Discontinuities are close to moderately close, moderately steep to steep, planar to curved, rough, tight, with FeOx staining. Rock Mass Quality = Poor R2; Core Times (minsec) 10.0-11.0'; (1:40) 11.0-12.0'; (2:00) 12.0-13.0'; (1:45) 13.0-14.0'; (1:50) 14.0-15.0'; (Not timed) Recovery = 87%	PLT_{50}=23,300 psi
10	R2	60/52	10.00 - 15.00	RQD = 47%				-7.70			
15											
20										Bottom of Exploration at 15.00 feet below ground surface.	
25											
30											
35											
40											
45											
50											

Remarks:
1. MaineDOT provided the surveyed location of the test boring referencing Station and Offset relative to the project baseline. Ground surface elevations are based on the North American Vertical Datum of 1988 (NAVD88).
2. PLT_{50} = Peak compressive strength estimated from Point Load Index Test.

Stratification lines represent approximate boundaries between soil types; transitions may be gradual.
* Water level readings have been made at times and under conditions stated. Groundwater fluctuations may occur due to conditions other than those present at the time measurements were made.

Page 1 of 1
Boring No.: BB-RDKR-209

3

Maine Department of Transportation
Soil/Rock Exploration Log
US CUSTOMARY UNITS

Project: Maine Kennebec Bridge #2506
Locations Richmond-Dresden, Maine

Boring No.: BB-RDKR-210
WIN: 12674.00

Driller:	Maine Test Borings	Elevation (ft.)	6.4	Auger ID/OD:	4.5"
Operator:	R. Leonard	Datum:	NAVD88	Sampler:	2" Split Spoon
Logged By:	W. Henrick	Rig Type:	Mobile B-53 Track	Hammer Wt./Fall:	140/30 SS
Date Start/Finish:	6/1/12	Drilling Method:	SSA	Core Barrel:	NQ-2
Boring Location:	125+00, 15.2 ft Lt.	Casing ID/OD:	HW/HW	Water Level*:	0.8
Hammer Efficiency Factor: 0.6		Hammer Type:	Automatic ☐ Hydraulic ☐ Rope & Cathead ☒		

Definitions:
D = Split Spoon Sample; MD = Unsuccessful Split Spoon Sample attempt; U = Thin Wall Tube Sample; MU = Unsuccessful Thin Wall Tube Sample attempt; V = Insitu Vane Shear Test; MV = Unsuccessful Insitu Vane Shear Test attempt; R = Rock Core Sample; SSA = Solid Stem Auger; HSA = Hollow Stem Auger; RC = Roller Cone; WOH = weight of 140lb. hammer; WOR = weight of rods or casing; S_u = Insitu Field Vane Shear Strength (psf); S_r = Pocket Torvane Shear Strength (psf); q_u = Unconfined Compressive Strength (ksf); N-uncorrected = Raw Field SPT N-value; Hammer Efficiency Factor = Annual Calibration Value; N_{60} = SPT N-uncorrected corrected for hammer efficiency; N_{60} = (Hammer Efficiency Factor/60%)*N-uncorrected; $S_{u(lab)}$ = Lab Vane Shear Strength (psf); WC = water content, percent; LL = Liquid Limit; PL = Plastic Limit; PI = Plasticity Index; G = Grain Size Analysis; C = Consolidation Test

Depth (ft.)	Sample No.	Pen./Rec. (in.)	Sample Depth (ft.)	Blows (/6 in.) Shear Strength (psf) or RQD (%)	N-uncorrected	N_{60}	Casing Blows	Elevation (ft.)	Graphic Log	Visual Description and Remarks	Laboratory Testing Results/ AASHTO and Unified Class
0							SSA				
	10	24/21	1.00 - 3.00	1/WOH/1/WOH	1	1				Light brown, wet, very soft, SILT, little fine sand, trace clay (Marine Nearshore Deposits).	GM267583 A-4, ML WC=84.3%
	2ND RT	1/0 63/57	3.00 - 3.08 5.00 - 8.35	50(1") RQD = 40%	---		NQ-2	-3.10		No recovery. Refusal on spoon at 3.1'. Top of bedrock at Elev. 3.3 ft. R1; Very light gray (N8) to medium dark gray (N4), medium to coarse grained, medium weak to strong (R3 to R4), moderately weathered, strongly foliated, quartz-feldspar-biotite GNEISS [Nehumkeag Pond Formation]. Discontinuities are very close to close, horizontal to steep, planar to irregular, rough to very rough with FeOx staining. Rock Mass Quality = Poor R1; Core Times (minsec) 3.1-4.1'; (1:50) 4.1-5.1'; (1:45) 5.1-6.1'; (1:30) 6.1-7.1'; (1:35) 7.1-8.4'; (2:00) Recovery = 90% R2; Medium gray (N5) to light gray (N7) to moderately yellowish brown (10 YR 5/4), fine to medium grained, weak (R2) to strong (R4), moderately to highly weathered, strongly foliated muscovite-biotite-quartz-feldspar SCHIST [Nehumkeag Pond Formation]. Discontinuities are very close, horizontal to vertical, planar to irregular, rough to smooth, with FeOx coatings. Rock Mass Quality = Very Poor R2; Core Times (minsec) 8.4-9.4'; (1:50) 9.4-9.9'; (1:10) Recovery = 11%. Spinal plugged at 9.9 ft. R3; Medium gray (N5) to light gray (N7) to moderately yellowish brown (10 YR 5/4), fine to medium grained, weak (R2) to strong (R4), moderately to highly weathered, strongly foliated muscovite-biotite-quartz-feldspar SCHIST [Nehumkeag Pond Formation]. Discontinuities are very close, horizontal to vertical, planar to irregular, rough to smooth, with FeOx coatings. Rock Mass Quality = Very Poor R3; Core Times (minsec) 9.9-10.9'; (1:10) 10.9-11.9'; (1:30) 11.9-12.9'; (3:10) 12.9-13.4'; (2:50) Recovery = 71% R4; Medium gray (N5) to very light gray (N8), fine to medium grained, strong (R4), moderately to slightly weathered, strongly foliated, quartz-biotite-feldspar SCHIST, grading to GNEISS at 15.9 ft. [Nehumkeag Pond Formation]. Discontinuities are very close to close, horizontal to steep, planar to irregular, rough, tight. Rock Mass Quality = Fair R4; Core Times (minsec) 13.4-14.4'; (1:25) 14.4-15.4'; (1:20) 15.4-16.4'; (2:15) 16.4-17.4'; (2:00) 17.4-19.4'; (2:30) Recovery = 97%	PLT_{50}=16,700 psi UCT_{50}=1,793 psi
5	R2	18/2	8.40 - 9.50	RQD = 0%				-5.10 5.20			
	R3	42/30	9.90 - 13.40	RQD = 0%							
10											
	R4	60/58	13.40 - 18.40	RQD = 52%				-12.00			
15											
20										Bottom of Exploration at 18.40 feet below ground surface.	
25											
30											
35											
40											
45											
50											

Remarks:
1. MaineDOT provided the surveyed location of the test boring referencing Station and Offset relative to the project baseline. Ground surface elevations are based on the North American Vertical Datum of 1988 (NAVD88).
2. PLT_{50} = Peak compressive strength estimated from Point Load Index Test.
3. UCT_{50} = Peak compressive strength from Unixaial Compressive Strength Test.

Stratification lines represent approximate boundaries between soil types; transitions may be gradual.
* Water level readings have been made at times and under conditions stated. Groundwater fluctuations may occur due to conditions other than those present at the time measurements were made.

Page 1 of 1
Boring No.: BB-RDKR-210

4

Maine Department of Transportation
Soil/Rock Exploration Log
US CUSTOMARY UNITS

Project: Maine Kennebec Bridge #2506
Locations Richmond-Dresden, Maine

Boring No.: HB-204
WIN: 12674.00

Driller:	Maine Test Borings	Elevation (ft.)	9.7	Auger ID/OD:	4.5"
Operator:	R. Leonard	Datum:	NAVD88	Sampler:	2" Split Spoon
Logged By:	W. Henrick	Rig Type:	Mobile B-53 Track	Hammer Wt./Fall:	140/30 SS
Date Start/Finish:	6/1/12	Drilling Method:	SSA	Core Barrel:	NA
Boring Location:	125+50.4, 0.1 ft Rt.	Casing ID/OD:	NA	Water Level*:	2.8
Hammer Efficiency Factor: 0.6		Hammer Type:	Automatic ☐ Hydraulic ☐ Rope & Cathead ☒		

Definitions:
D = Split Spoon Sample; MD = Unsuccessful Split Spoon Sample attempt; U = Thin Wall Tube Sample; MU = Unsuccessful Thin Wall Tube Sample attempt; V = Insitu Vane Shear Test; MV = Unsuccessful Insitu Vane Shear Test attempt; R = Rock Core Sample; SSA = Solid Stem Auger; HSA = Hollow Stem Auger; RC = Roller Cone; WOH = weight of 140lb. hammer; WOR = weight of rods or casing; S_u = Insitu Field Vane Shear Strength (psf); S_r = Pocket Torvane Shear Strength (psf); q_u = Unconfined Compressive Strength (ksf); N-uncorrected = Raw Field SPT N-value; Hammer Efficiency Factor = Annual Calibration Value; N_{60} = SPT N-uncorrected corrected for hammer efficiency; N_{60} = (Hammer Efficiency Factor/60%)*N-uncorrected; $S_{u(lab)}$ = Lab Vane Shear Strength (psf); WC = water content, percent; LL = Liquid Limit; PL = Plastic Limit; PI = Plasticity Index; G = Grain Size Analysis; C = Consolidation Test

Depth (ft.)	Sample No.	Pen./Rec. (in.)	Sample Depth (ft.)	Blows (/6 in.) Shear Strength (psf) or RQD (%)	N-uncorrected	N_{60}	Casing Blows	Elevation (ft.)	Graphic Log	Visual Description and Remarks	Laboratory Testing Results/ AASHTO and Unified Class
0							SSA				
	10	24/19	1.00 - 3.00	1/1/1/1	2	2				Light brown, moist, soft, fine Sandy SILT, trace clay (Marine Nearshore Deposits).	GM267584 A-4, ML WC=32.8%
	20	24/17	3.00 - 5.00	1/1/1/3	2	2				Light brown, wet, soft, fine SAND, some silt, trace clay (Marine Nearshore Deposits).	GM241669 A-3, SM WC=23.7%
5	30	24/14	5.00 - 7.00	1/4/6/6	10	10				Light brown, wet, stiff, fine Sandy SILT, trace clay (Marine Nearshore Deposits).	GM267585 A-4, ML WC=25.9%
										Gravel lens at 7.5 ft. based on auger behavior.	
	40	24/22	8.00 - 10.00	2/4/8/10	12	12				Light brown, wet, medium dense, fine SAND, some silt, trace gravel, trace clay (Marine Nearshore Deposits).	GM241670 A-2-4, SM WC=13.6%
10	50	15/12	10.00 - 11.25	15/15/50(3")	---			-1.60 -1.80		Set HW casing to 10 ft. Light brown, wet, fine SAND, little gravel, little silt (Marine Nearshore Deposits). Weathered rock in spoon tip.	
										Refusal on spoon at 11.3 ft. Refusal on auger at 11.5 ft. Possible bedrock at Elev. -1.6 ft.	
15										Bottom of Exploration at 11.50 feet below ground surface.	
20											
25											
30											
35											
40											
45											
50											

Remarks:
1. MaineDOT provided the surveyed location of the test boring referencing Station and Offset relative to the project baseline. Ground surface elevations are based on the North American Vertical Datum of 1988 (NAVD88).

Stratification lines represent approximate boundaries between soil types; transitions may be gradual.
* Water level readings have been made at times and under conditions stated. Groundwater fluctuations may occur due to conditions other than those present at the time measurements were made.

Page 1 of 1
Boring No.: HB-204

5

Maine Department of Transportation
Soil/Rock Exploration Log
US CUSTOMARY UNITS

Project: Maine Kennebec Bridge #2506
Locations Richmond-Dresden, Maine

Boring No.: HB-205
WIN: 12674.00

Driller:	Maine Test Borings	Elevation (ft.)	6.7	Auger ID/OD:	4.5"
Operator:	R. Leonard	Datum:	NAVD88	Sampler:	2" Split Spoon
Logged By:	W. Henrick	Rig Type:	Mobile B-53 Track	Hammer Wt./Fall:	140/30 SS
Date Start/Finish:	5/30/12	Drilling Method:	SSA/CWD	Core Barrel:	NA
Boring Location:	126+01.5, 1.2 ft Lt.	Casing ID/OD:	HW	Water Level*:	0.0
Hammer Efficiency Factor: 0.6		Hammer Type:	Automatic ☐ Hydraulic ☐ Rope & Cathead ☒		

Definitions:
D = Split Spoon Sample; MD = Unsuccessful Split Spoon Sample attempt; U = Thin Wall Tube Sample; MU = Unsuccessful Thin Wall Tube Sample attempt; V = Insitu Vane Shear Test; MV = Unsuccessful Insitu Vane Shear Test attempt; R = Rock Core Sample; SSA = Solid Stem Auger; HSA = Hollow Stem Auger; RC = Roller Cone; WOH = weight of 140lb. hammer; WOR = weight of rods or casing; S_u = Insitu Field Vane Shear Strength (psf); S_r = Pocket Torvane Shear Strength (psf); q_u = Unconfined Compressive Strength (ksf); N-uncorrected = Raw Field SPT N-value; Hammer Efficiency Factor = Annual Calibration Value; N_{60} = SPT N-uncorrected corrected for hammer efficiency; N_{60} = (Hammer Efficiency Factor/60%)*N-uncorrected; $S_{u(lab)}$ = Lab Vane Shear Strength (psf); WC = water content, percent; LL = Liquid Limit; PL = Plastic Limit; PI = Plasticity Index; G = Grain Size Analysis; C = Consolidation Test

Depth (ft.)	Sample No.	Pen./Rec. (in.)	Sample Depth (ft.)	Blows (/6 in.) Shear Strength (psf) or RQD (%)	N-uncorrected	N_{60}	Casing Blows	Elevation (ft.)	Graphic Log	Visual Description and Remarks	Laboratory Testing Results/ AASHTO and Unified Class
0							SSA				
	10	24/24	1.00 - 3.00	WOH/WOH/1/1	1	1				Top 14"; Dark gray, wet, very soft, SILT, some fine sand, little organics (roots) (Marine Nearshore Deposits). Bottom 10"; wood, partially decomposed.	WC=556% Org. Cont.= 19.5%
	20	24/16	3.00 - 5.00	WOH/WOH/WOH/WOH	---					Dark gray, wet, very soft, fine Sandy SILT, little clay, trace organics (Marine Nearshore Deposits).	GM267591 A-4, CL-ML WC=125.7%
5	30 ST	24/15	5.00 - 7.00	WOH/WOH/1/WOH Su=811,45 psf	1	1	OPEN			Set HW casing to 5 ft. Dark gray, wet, very soft, fine Sandy SILT, trace clay, trace organics (roots) (Marine Nearshore Deposits). Increasing sand with depth. 55x110 mm vane raw torque readings: V1; 11.0/1.0 ft-lbs W2; Would not push.	GM267565 A-4, ML WC=81.3%
	MV2		5.96 - 6.16	Would not push							
	MV3		7.90 - 8.26	Would not push						W3; Would not push. Gray, wet, medium stiff, fine Sandy SILT, trace clay (Marine Nearshore Deposits).	
	40	24/24	8.00 - 10.00	2/3/3/1	6	6					GM241672 A-4, ML WC=20.6%
10								-12.00			
								-5.30		Gravel at 12" based on drill behavior.	
	50	24/5	13.00 - 15.00	10/10/9/7	19	19				Gray, wet, medium dense, fine to coarse Sandy GRAVEL, little silt, trace clay (Glacial Till).	GM267597 A-1-b, SM WC=16.5%
15											
20	60	24/15	19.00 - 21.00	25/27/28/49	55	55				Set HW casing to 19' and wash ahead. Gray, wet, very dense, fine to coarse SAND, little gravel, some silt (Glacial Till).	GM267566 A-2-4, SM WC=12.0%
								-17.20 -17.80		Bedrock at Elev. -17.2 ft, based on drill behavior. Advance roller bit to 24.5' to confirm.	
25											
30										Bottom of Exploration at 24.50 feet below ground surface.	
35											
40											
45											
50											

Remarks:
1. MaineDOT provided the surveyed location of the test boring referencing Station and Offset relative to the project baseline. Ground surface elevations are based on the North American Vertical Datum of 1988 (NAVD88).

Stratification lines represent approximate boundaries between soil types; transitions may be gradual.
* Water level readings have been made at times and under conditions stated. Groundwater fluctuations may occur due to conditions other than those present at the time measurements were made.

Page 1 of 1
Boring No.: HB-205

STATE OF MAINE
DEPARTMENT OF TRANSPORTATION
AC-BH-1267(400)
WIN 12674.00
BRIDGE NO. 2506
BRIDGE PLANS

		BY	DATE
PROJ. MANAGER	N. Benoit		
DESIGN-DETAILED	Team South	Team South	April 2012
CHECKED-REVIEWED	------	------	------
DESIGN2-DETAILED2	L.KRUSINSKI	T.WHITE	JAN 2013
DESIGN3-DETAILED3	------	------	------
REVISIONS 1	------	------	------
REVISIONS 2	------	------	------
REVISIONS 3	------	------	------
REVISIONS 4	------	------	------
FIELD CHANGES	------	------	------

SIGNATURE
P.E. NUMBER
DATE

MAINE KENNEBEC BRIDGE
KENNEBEC RIVER
RICHMOND-DRESDEN SAGADAHOC-LINCOLN CTYS.

BORING LOGS

SHEET NUMBER
32
OF 238

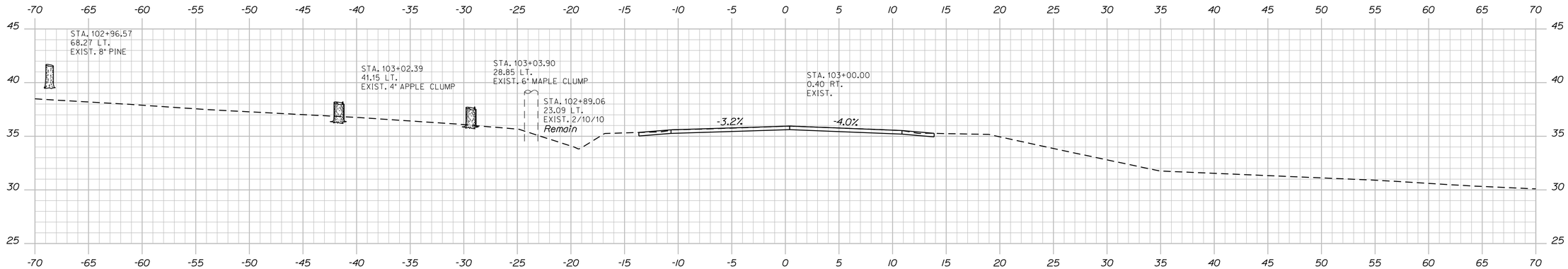

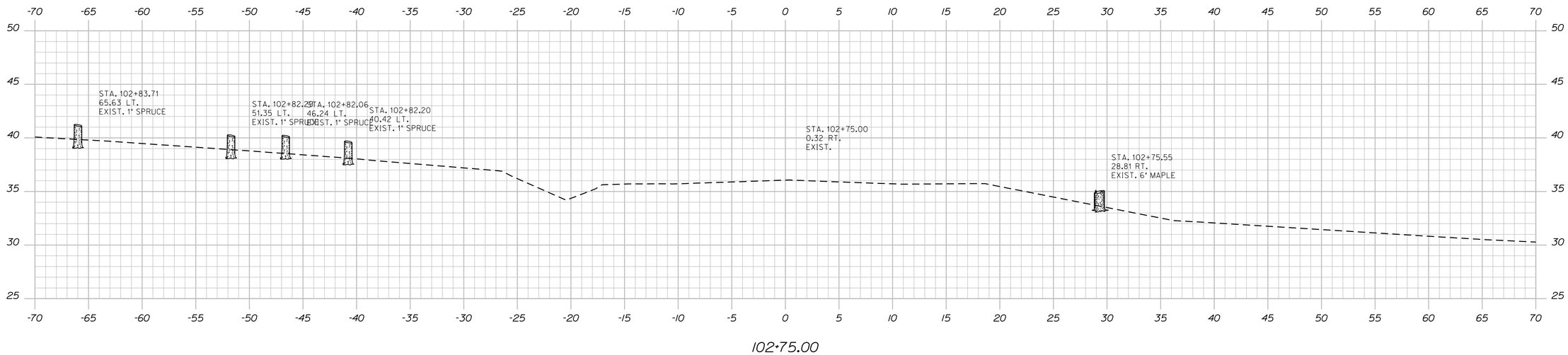

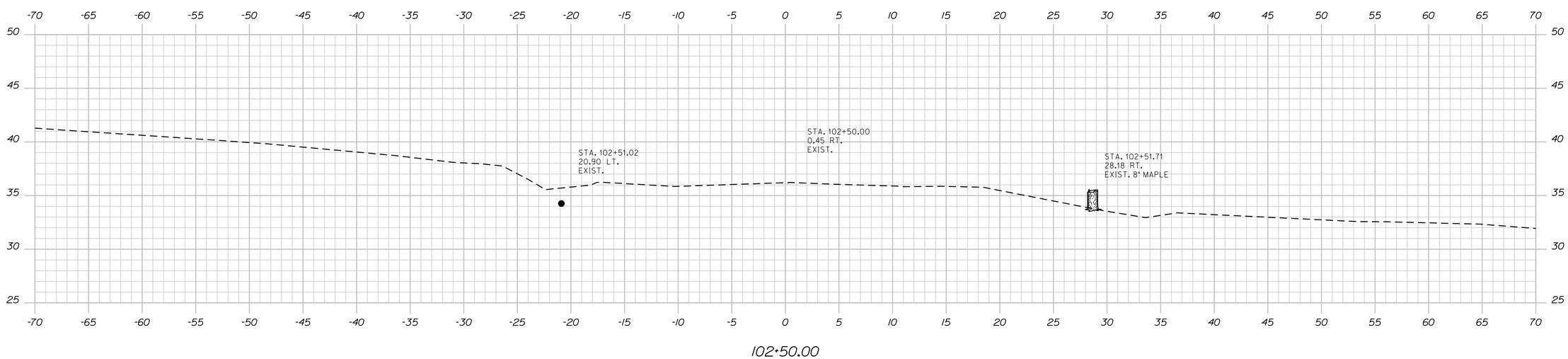

STATE OF MAINE
DEPARTMENT OF TRANSPORTATION

AC-BH-1267(400)

PIN 12674.00

BRIDGE NO. 2506

BRIDGE PLANS

PROJ. MANAGER	N. Benoit	BY	DATE
DESIGN-DETAILED	Team South	DMD/DMS	May 2012
CHECKED-REVIEWED	------	------	------
DESIGN2-DETAILED2	------	------	------
DESIGN3-DETAILED3	------	------	------
REVISIONS 1	------	------	------
REVISIONS 2	------	------	------
REVISIONS 3	------	------	------
REVISIONS 4	------	------	------
FIELD CHANGES	------	------	------

SIGNATURE

P.E. NUMBER

DATE

MAINE KENNEBEC BRIDGE
KENNEBEC RIVER
RICHMOND, SAGADAHOC CTY. DRESDEN, LINCOLN CTY.

CROSS SECTIONS: RTE. 197 (RICHMOND)

SHEET NUMBER

33

OF 238

Sta. 102+50.00 to Sta. 103+00.00

Filename: ...\033_Xsect_Route 197_Richmond_102+50to103+00.dgn

Username: dana.damren

Date:3/27/2013

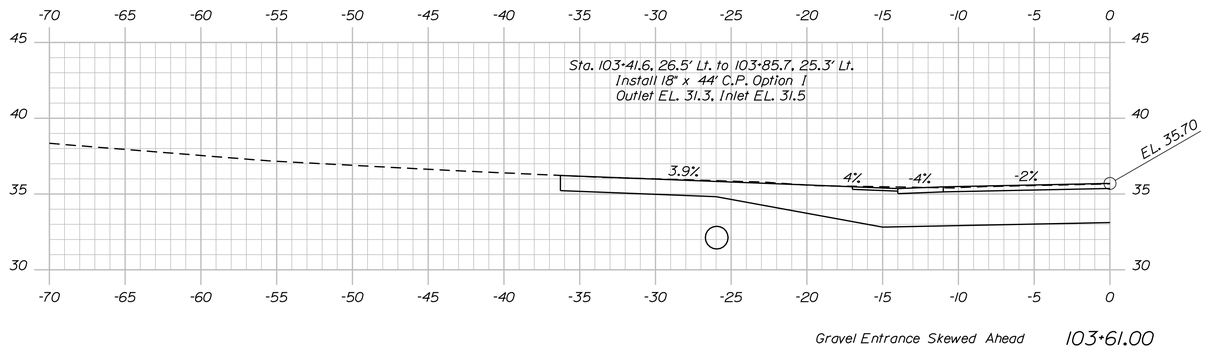

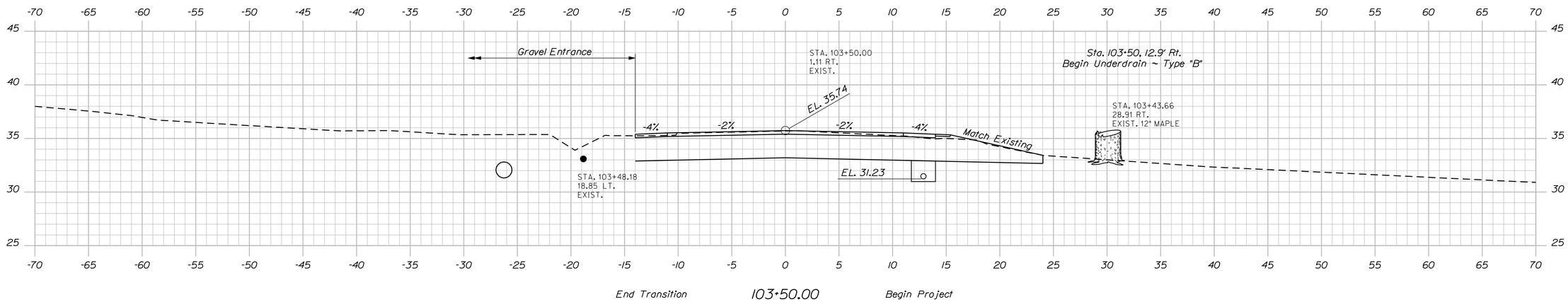

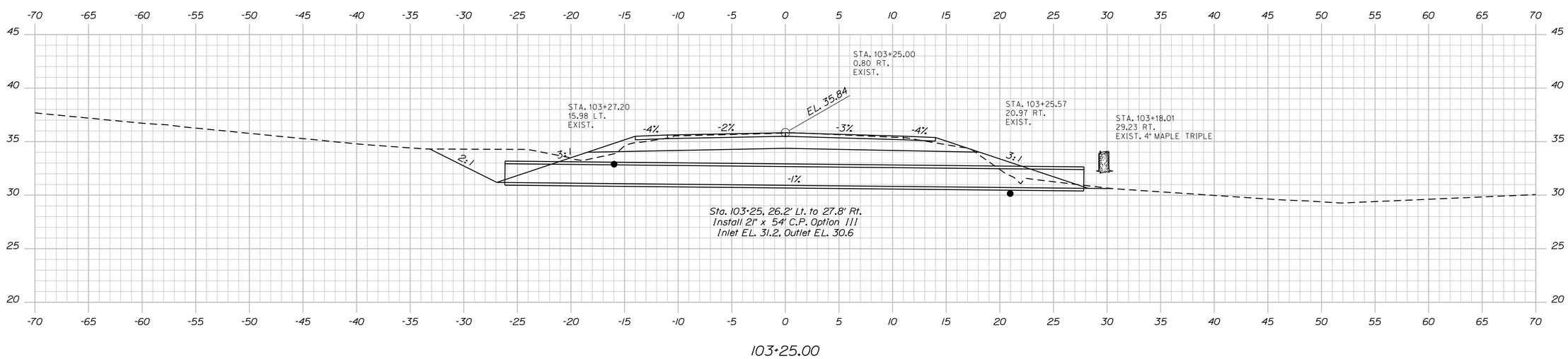

STATE OF MAINE
DEPARTMENT OF TRANSPORTATION

AC-BH-1267(400)

PIN 12674.00

BRIDGE NO. 2506

BRIDGE PLANS

PROJ. MANAGER	N. Benoit	BY	DATE
DESIGN-DETAILED	Team South	DMD/DMS	May 2012
CHECKED-REVIEWED	------	------	------
DESIGN2-DETAILED2	------	------	------
DESIGN3-DETAILED3	------	------	------
REVISIONS 1	------	------	------
REVISIONS 2	------	------	------
REVISIONS 3	------	------	------
REVISIONS 4	------	------	------
FIELD CHANGES	------	------	------

SIGNATURE

P.E. NUMBER

DATE

MAINE KENNEBEC BRIDGE
KENNEBEC RIVER
RICHMOND, SAGADAHOC CTY. DRESDEN, LINCOLN CTY.

CROSS SECTIONS: RTE. 197 (RICHMOND)

SHEET NUMBER
34
OF 238

Filename: ...\034_Xsect_Route 197_Richmond_103-Division02.dgn Username: dana.damren Date:3/27/2013

Sta. 103+25.00 to Sta. 103+61.00

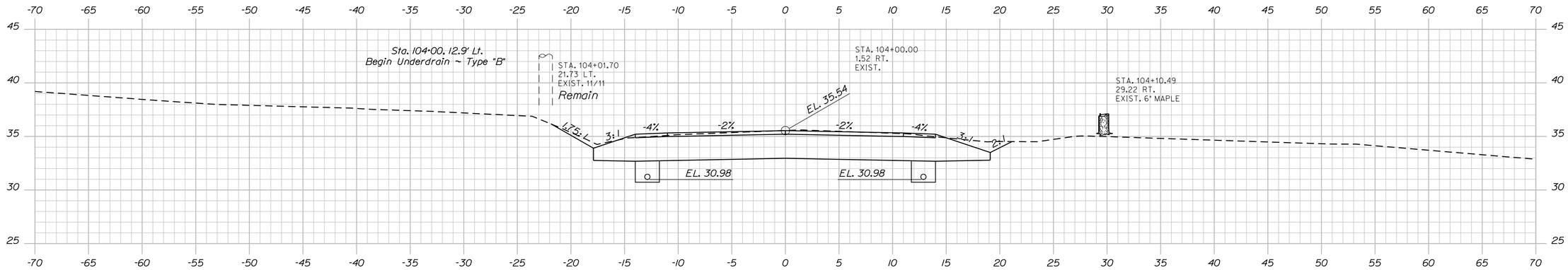

104+00.00

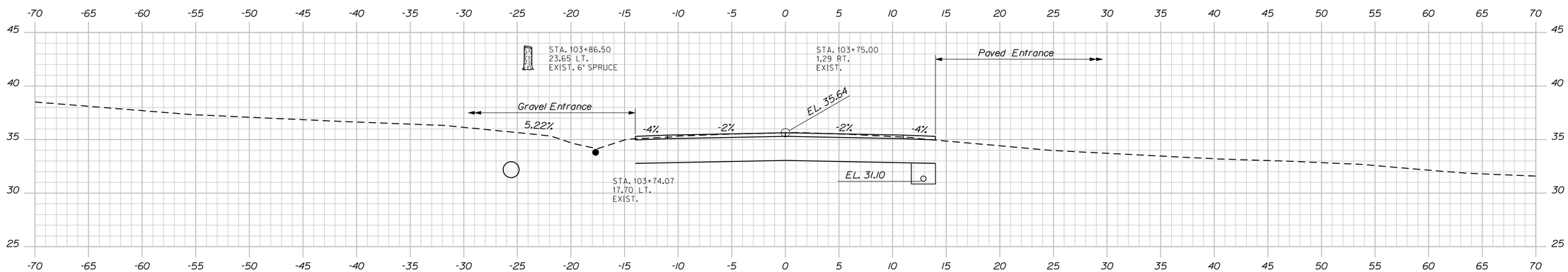

103+75.00

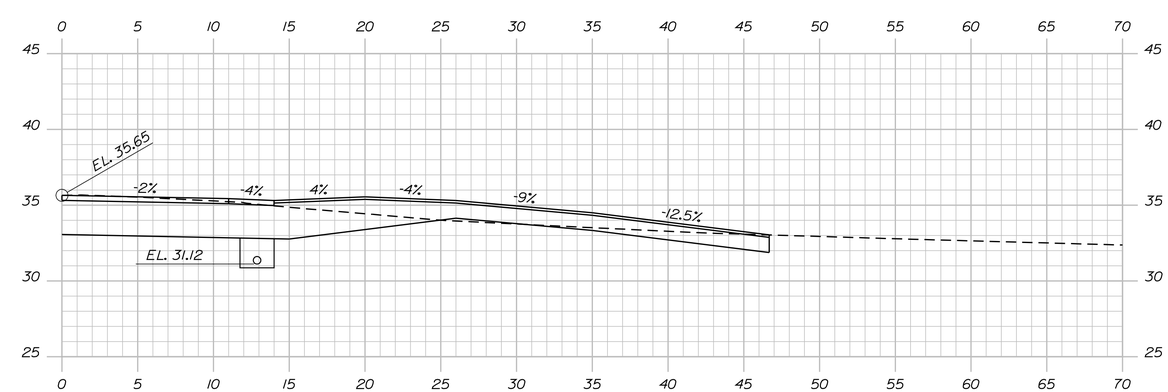

103+72.00 Gravel Entrance Skewed Ahead

STATE OF MAINE
DEPARTMENT OF TRANSPORTATION

AC-BH-1267(400)

PIN 12674.00

BRIDGE NO. 2506

BRIDGE PLANS

PROJ. MANAGER	N. Benoit	BY	DATE
DESIGN-DETAILED	Team South	DMD/DMS	May 2012
CHECKED-REVIEWED	------	------	------
DESIGN2-DETAILED2	------	------	------
DESIGN3-DETAILED3	------	------	------
REVISIONS 1	------	------	------
REVISIONS 2	------	------	------
REVISIONS 3	------	------	------
REVISIONS 4	------	------	------
FIELD CHANGES	------	------	------

SIGNATURE

P.E. NUMBER

DATE

MAINE KENNEBEC BRIDGE
KENNEBEC RIVER
RICHMOND, SAGADAHOC CTY. DRESDEN, LINCOLN CTY.

CROSS SECTIONS: RTE. 197 (RICHMOND)

SHEET NUMBER

35

OF 238

Sta. 103+72.00 to Sta. 104+00.00

Filename: ...\035_Xsect_Route 197_Richmond_103+00to104+00.dgn Date:3/27/2013

Username: dana.damren

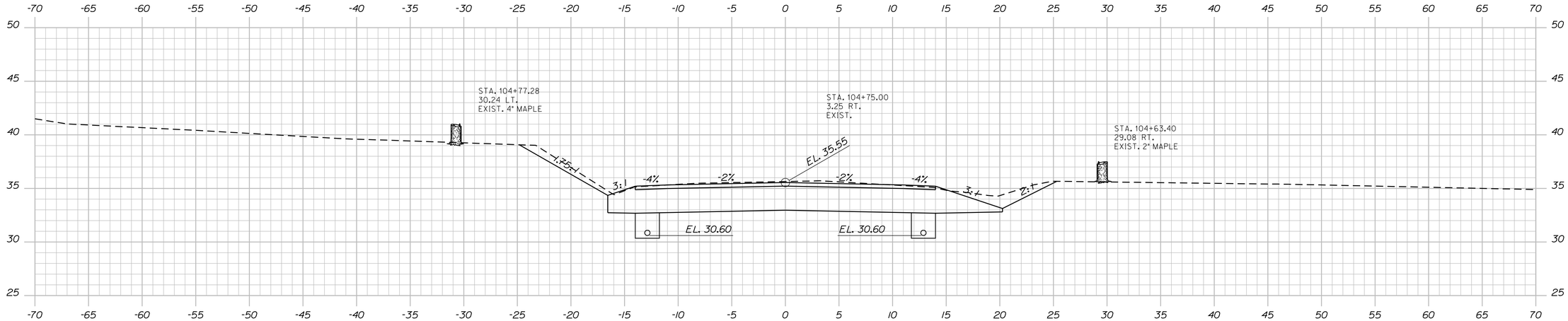

104+75.00

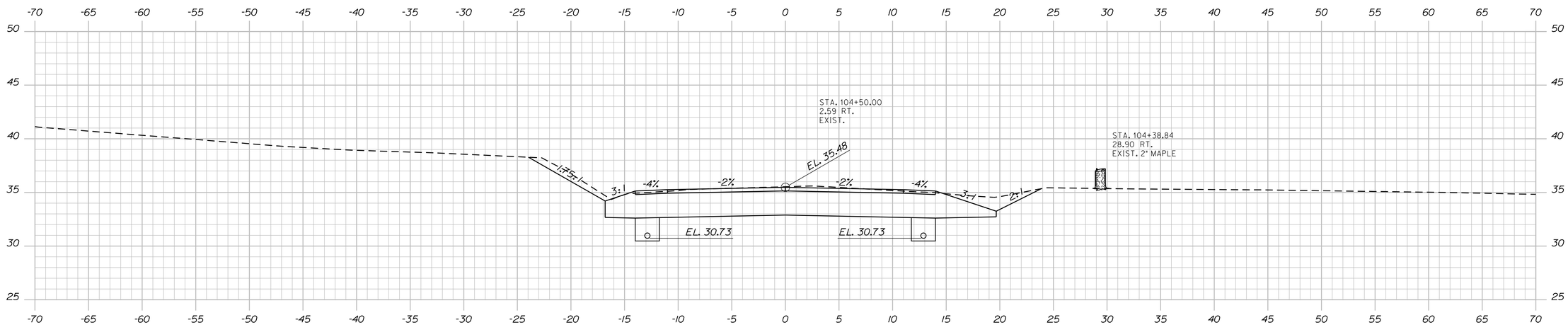

104+50.00

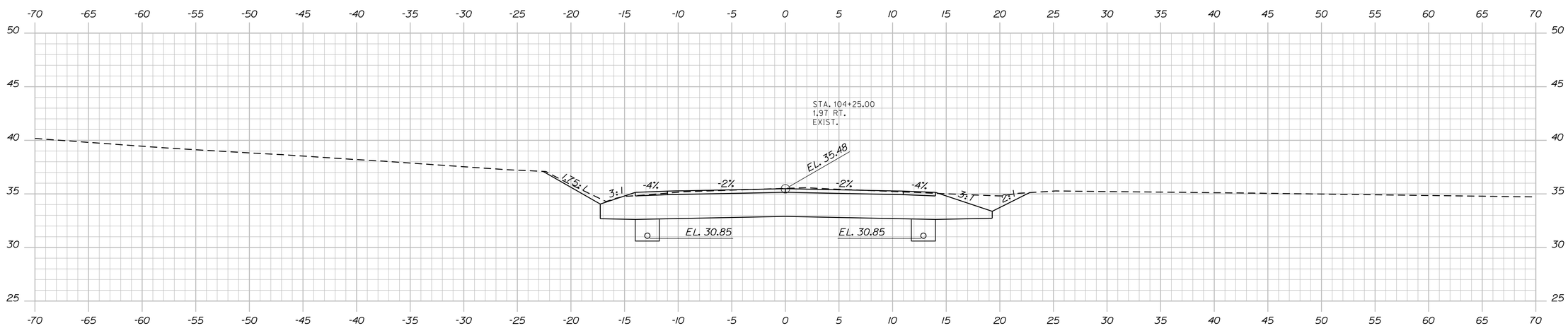

104+25.00

Sta. 104+25.00 to Sta. 104+75.00

STATE OF MAINE
DEPARTMENT OF TRANSPORTATION

AC-BH-1267(400)

PIN 12674.00

BRIDGE NO. 2506

BRIDGE PLANS

PROJ. MANAGER	N. Benoit	BY	DATE
DESIGN-DETAILED	Team South	DMD/DMS	May 2012
CHECKED-REVIEWED	------	------	------
DESIGN2-DETAILED2	------	------	------
DESIGN3-DETAILED3	------	------	------
REVISIONS 1	------	------	------
REVISIONS 2	------	------	------
REVISIONS 3	------	------	------
REVISIONS 4	------	------	------
FIELD CHANGES	------	------	------

SIGNATURE

P.E. NUMBER

DATE

MAINE KENNEBEC BRIDGE
KENNEBEC RIVER
RICHMOND, SAGADAHOC CTY. DRESDEN, LINCOLN CTY.

CROSS SECTIONS: RTE. 197 (RICHMOND)

SHEET NUMBER

36

OF 238

Filename: ...\036_Xsect_Route 197_Richmond_104+75to104+25.dgn

Username: dana.damren

Date:3/27/2013

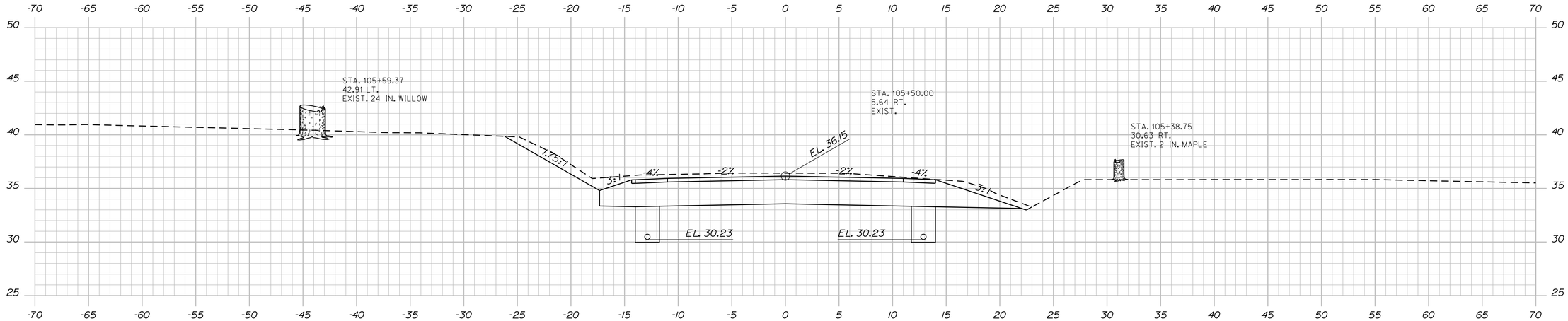

105+50.00

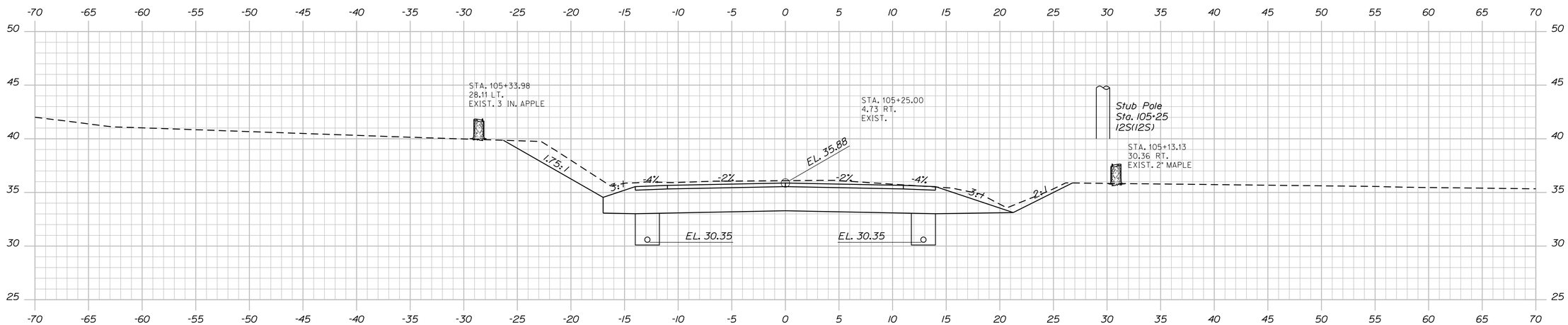

105+25.00

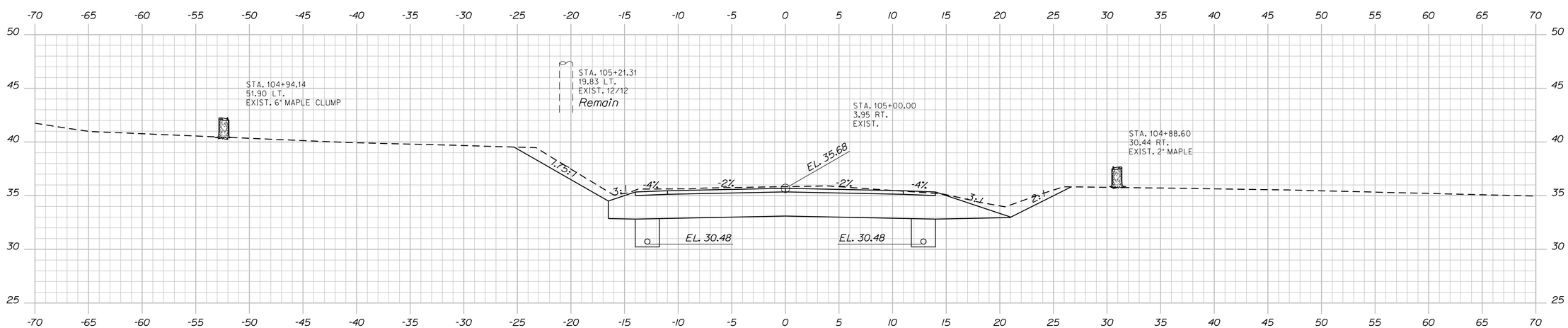

105+00.00

STATE OF MAINE
DEPARTMENT OF TRANSPORTATION

AC-BH-1267(400)

PIN 12674.00

BRIDGE NO. 2506

BRIDGE PLANS

PROJ. MANAGER	N. Benoit		
DESIGN-DETAILED	Team South	BY	DATE
CHECKED-REVIEWED		DMD/DMS	May 2012
DESIGN2-DETAILED2			
DESIGN3-DETAILED3			
REVISIONS 1			
REVISIONS 2			
REVISIONS 3			
REVISIONS 4			
FIELD CHANGES			

SIGNATURE

P.E. NUMBER

DATE

MAINE KENNEBEC BRIDGE
KENNEBEC RIVER
RICHMOND, SAGADAHOC CTY. DRESDEN, LINCOLN CTY.

CROSS SECTIONS: RTE. 197 (RICHMOND)

SHEET NUMBER

37

OF 238

Sta. 105+00.00 to Sta. 105+50.00

Filename: ...\037_Xsect_Route 197_Richmond_105+00to105+50.dgn Username: dana.damren Date:3/27/2013

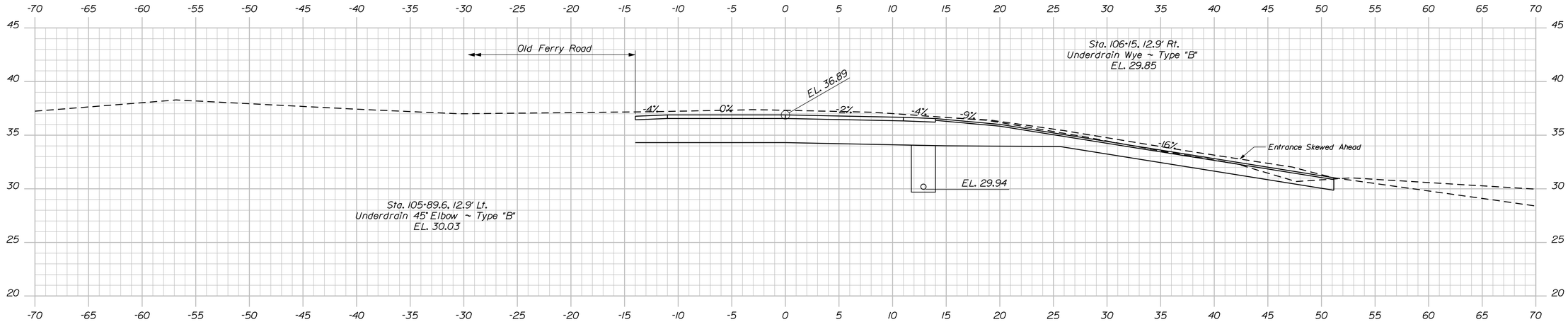

106+00.00 Paved Entrance Skewed Ahead

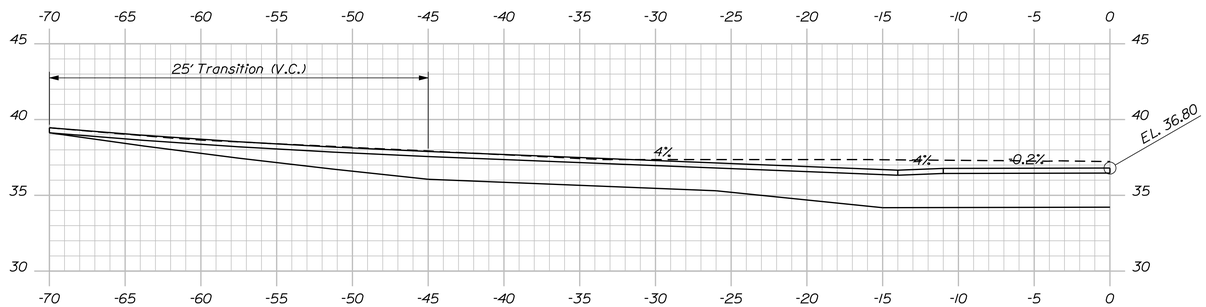

Old Ferry Road Skewed Back 105+95.00

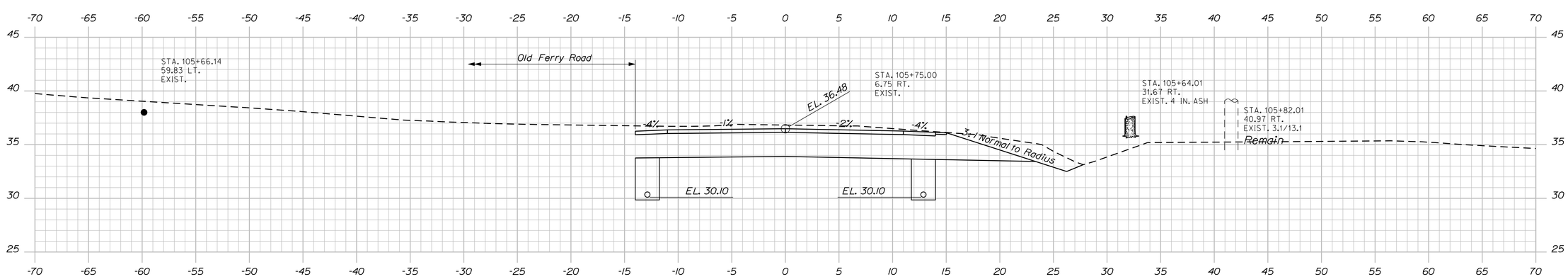

105+75.00

STATE OF MAINE
DEPARTMENT OF TRANSPORTATION

AC-BH-1267(400)

PIN 12674.00

BRIDGE NO. 2506

BRIDGE PLANS

PROJ. MANAGER	N. Benoit		
DESIGN-DETAILED	Team South	BY	DATE
CHECKED-REVIEWED	------	DMD/DMS	May 2012
DESIGN2-DETAILED2	------	------	------
DESIGN3-DETAILED3	------	------	------
REVISIONS 1	------	------	------
REVISIONS 2	------	------	------
REVISIONS 3	------	------	------
REVISIONS 4	------	------	------
FIELD CHANGES	------	------	------

SIGNATURE

P.E. NUMBER

DATE

MAINE KENNEBEC BRIDGE
KENNEBEC RIVER
RICHMOND, SAGADAHOC CTY. DRESDEN, LINCOLN CTY.

CROSS SECTIONS: RTE. 197 (RICHMOND)

SHEET NUMBER

38

OF 238

Sta. 105+75.00 to Sta. 106+00.00

Filename: ...\038_Xsect_Route 197_Richmond_105+75to106+00.dgn Username: dana.damren Date:3/27/2013

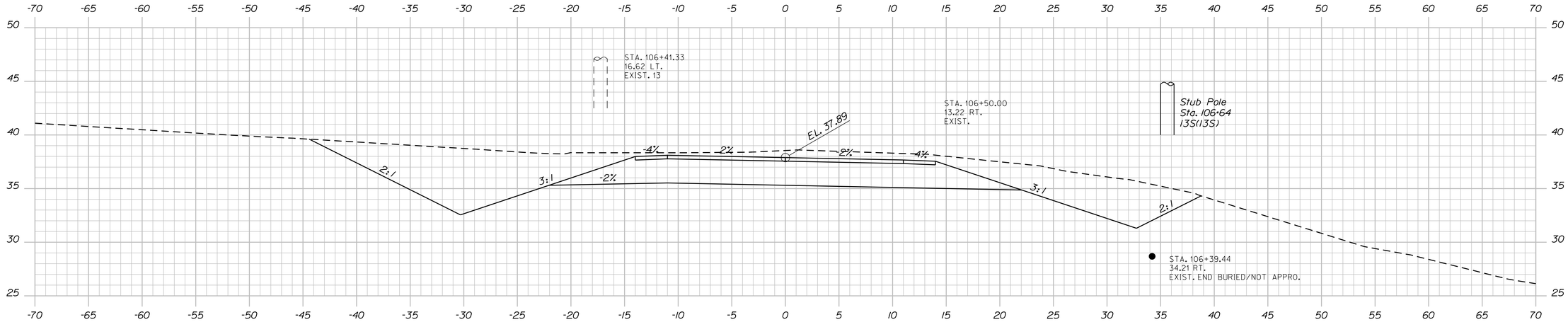

106+50.00

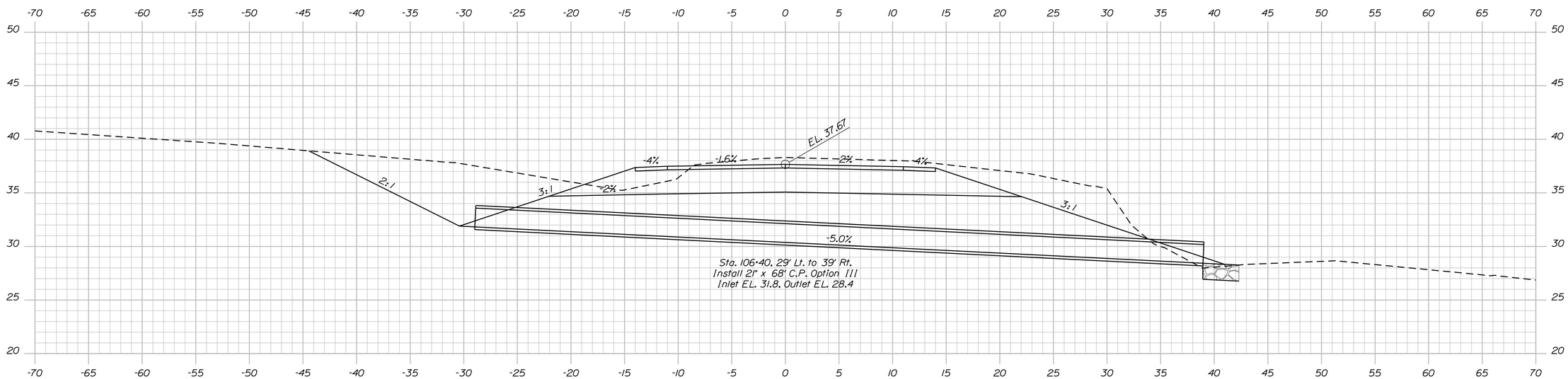

106+40.00

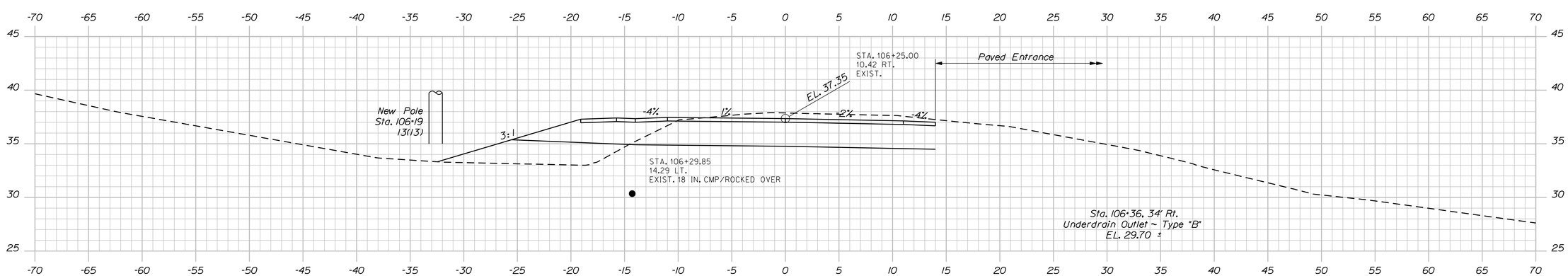

106+25.00

STATE OF MAINE
DEPARTMENT OF TRANSPORTATION

AC-BH-1267(400)

PIN 12674.00

BRIDGE NO. 2506

BRIDGE PLANS

PROJ. MANAGER	N. Benoit	BY	DATE
DESIGN-DETAILED	Team South	DMD/DMS	May 2012
CHECKED-REVIEWED	------	------	------
DESIGN2-DETAILED2	------	------	------
DESIGN3-DETAILED3	------	------	------
REVISIONS 1	------	------	------
REVISIONS 2	------	------	------
REVISIONS 3	------	------	------
REVISIONS 4	------	------	------
FIELD CHANGES	------	------	------

SIGNATURE

P.E. NUMBER

DATE

MAINE KENNEBEC BRIDGE
KENNEBEC RIVER
RICHMOND, SAGADAHOC CTY. DRESDEN, LINCOLN CTY.

CROSS SECTIONS: RTE. 197 (RICHMOND)

SHEET NUMBER

39

OF 238

Filename: ...\039_Xsect_Route 197_Richmond_106+25to106+70.dgn Username: dana.damren Date:3/27/2013

Sta. 106+25.00 to Sta. 106+70.00

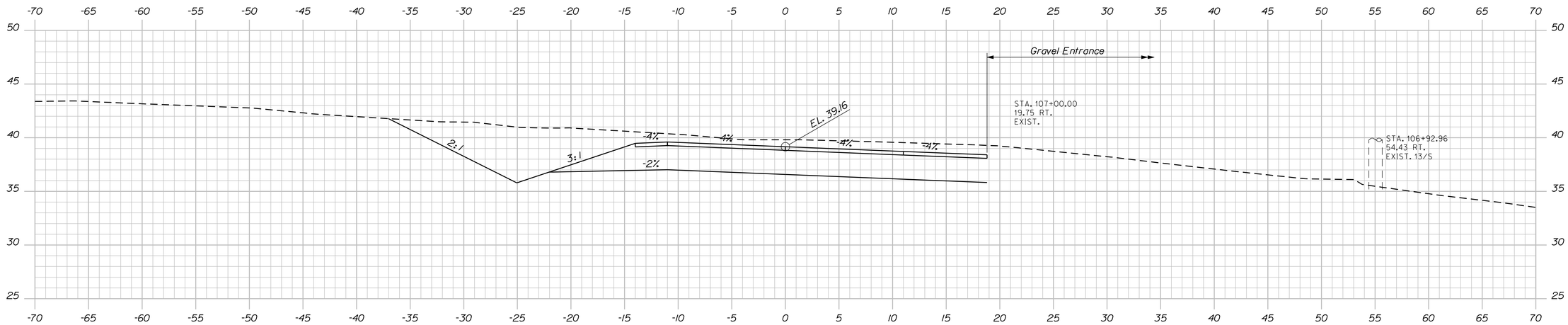

107+00.00

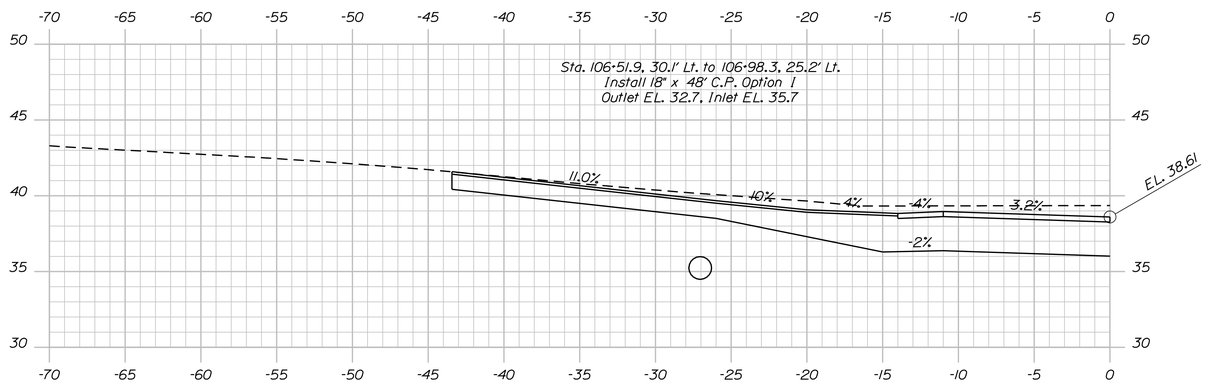

Paved Entrance 106+80.00

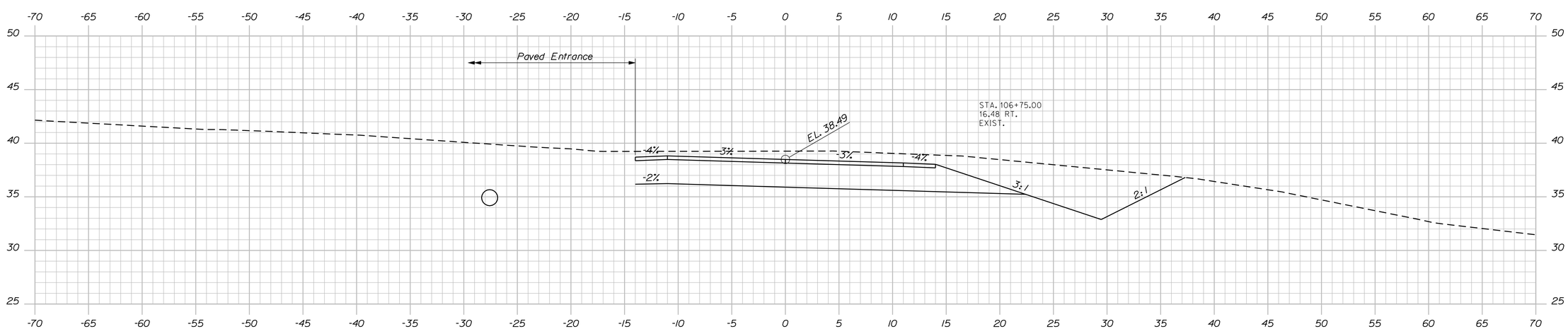

106+75.00

STATE OF MAINE
DEPARTMENT OF TRANSPORTATION

AC-BH-1267(400)

PIN 12674.00

BRIDGE NO. 2506

BRIDGE PLANS

PROJ. MANAGER	N. Benoit	BY	DATE
DESIGN-DETAILED	Team South	DMD/DMS	May 2012
CHECKED-REVIEWED	------	------	------
DESIGN2-DETAILED2	------	------	------
DESIGN3-DETAILED3	------	------	------
REVISIONS 1	------	------	------
REVISIONS 2	------	------	------
REVISIONS 3	------	------	------
REVISIONS 4	------	------	------
FIELD CHANGES	------	------	------

SIGNATURE

P.E. NUMBER

DATE

MAINE KENNEBEC BRIDGE
KENNEBEC RIVER
RICHMOND, SAGADAHOC CTY. DRESDEN, LINCOLN CTY.

CROSS SECTIONS: RTE. 197 (RICHMOND)

SHEET NUMBER

40

OF 238

Sta. 106+75.00 to Sta. 107+25.00

Filename: ...\040_Xsect_Route 197_Richmond_106+75to108.dgn Username: dana.damren Date:3/27/2013

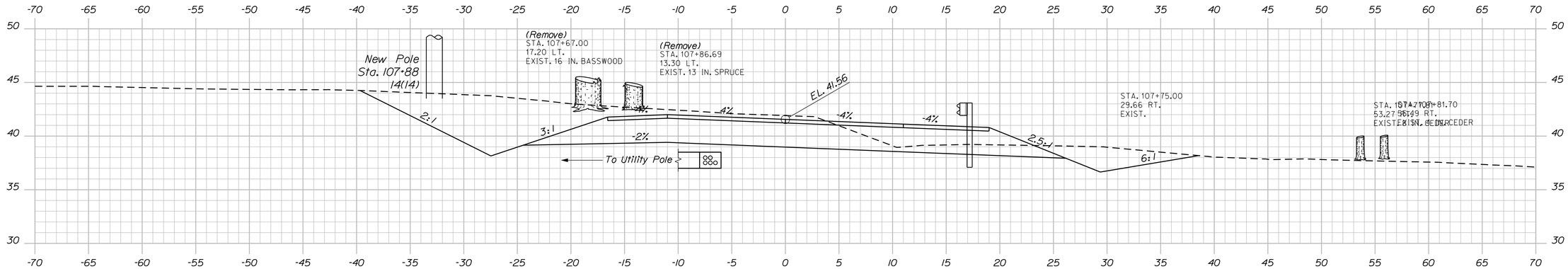

107+75.00

Sta. 107+53.7 to 107+69.3
Install 25 L.F. GR Type 3c @ 15' R.
with Terminal End

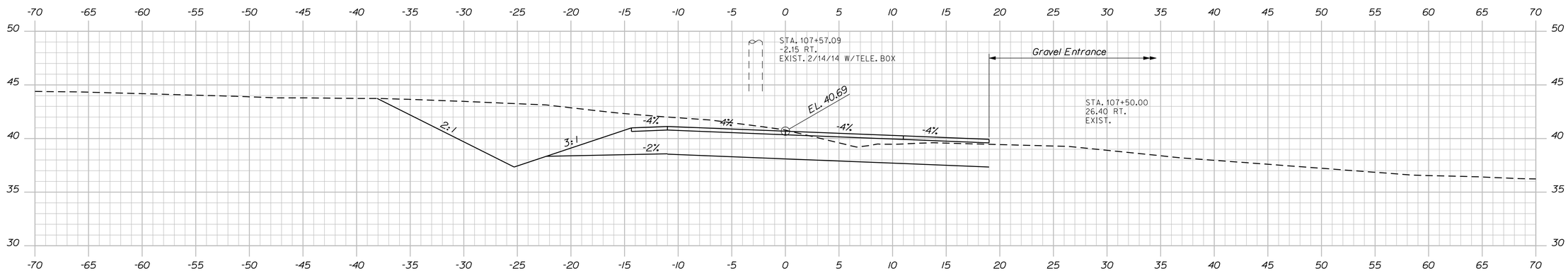

107+50.00

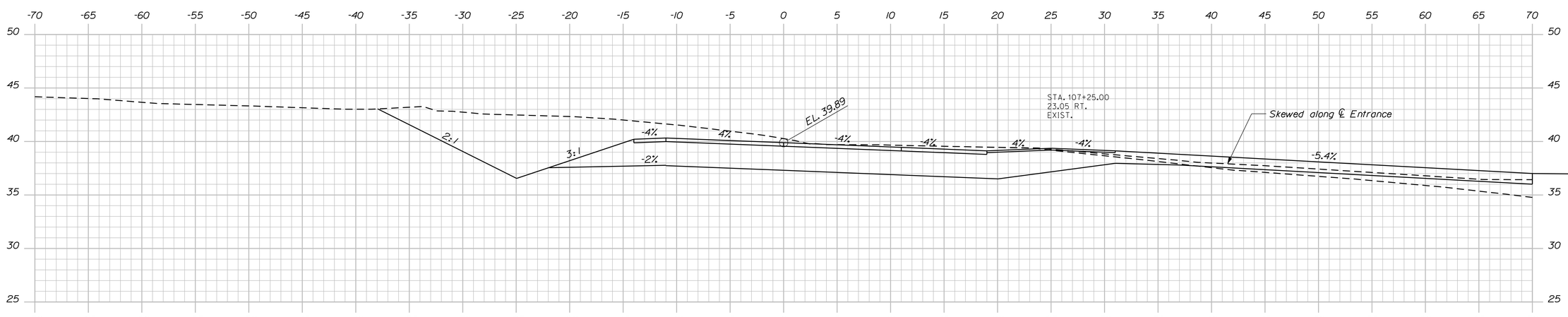

107+25.00 Gravel Entrance Skewed Ahead

STATE OF MAINE
DEPARTMENT OF TRANSPORTATION

AC-BH-1267(400)

PIN 12674.00

BRIDGE NO. 2506

BRIDGE PLANS

PROJ. MANAGER	N. Benoit	BY	DATE
DESIGN-DETAILED	Team South	DMD/DMS	May 2012
CHECKED-REVIEWED	------	------	------
DESIGN2-DETAILED2	------	------	------
DESIGN3-DETAILED3	------	------	------
REVISIONS 1	------	------	------
REVISIONS 2	------	------	------
REVISIONS 3	------	------	------
REVISIONS 4	------	------	------
FIELD CHANGES	------	------	------

SIGNATURE

P.E. NUMBER

DATE

MAINE KENNEBEC BRIDGE
KENNEBEC RIVER
RICHMOND, SAGADAHOC CTY. DRESDEN, LINCOLN CTY.

CROSS SECTIONS: RTE. 197 (RICHMOND)

SHEET NUMBER

41

OF 238

Sta. 107+40.00 to Sta. 107+75.00

Filename: ...\041_Xsect_Route 197_Richmond_107+40 to 108+00.dgn Username: dana.damren Date:3/27/2013

Sta. 108+38.3 to 108+74.6
Install GR 350 Flared Terminal

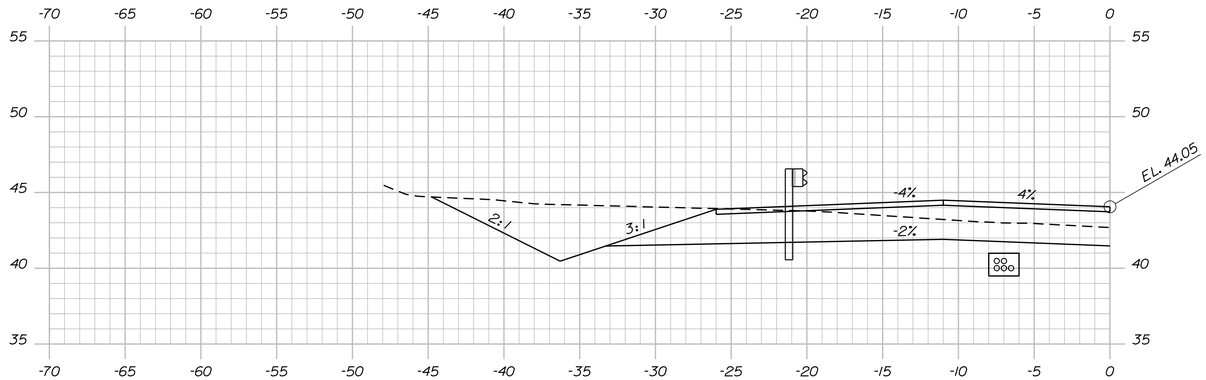

108+38.3

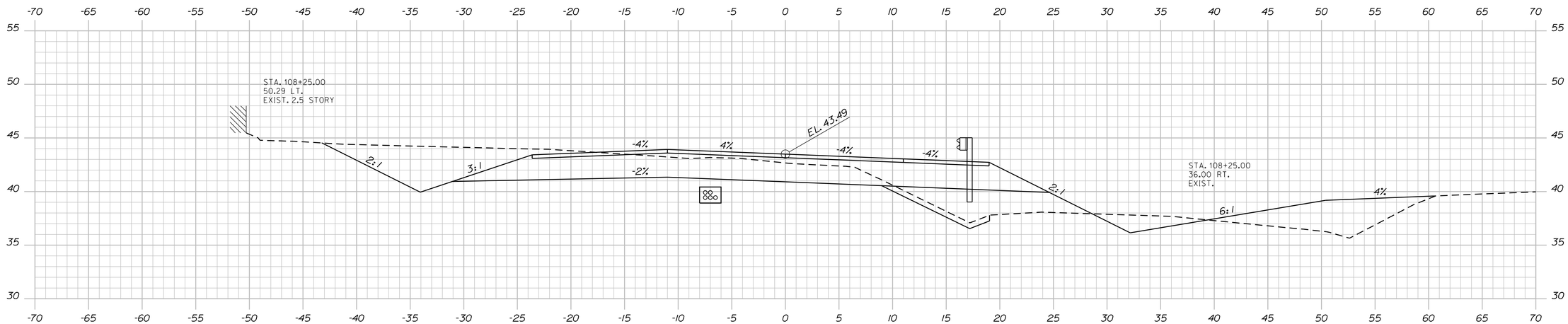

108+25.00

Sta. 107+69.3 to 109+86.2
Install 212.5 L.F. GR Type 3c

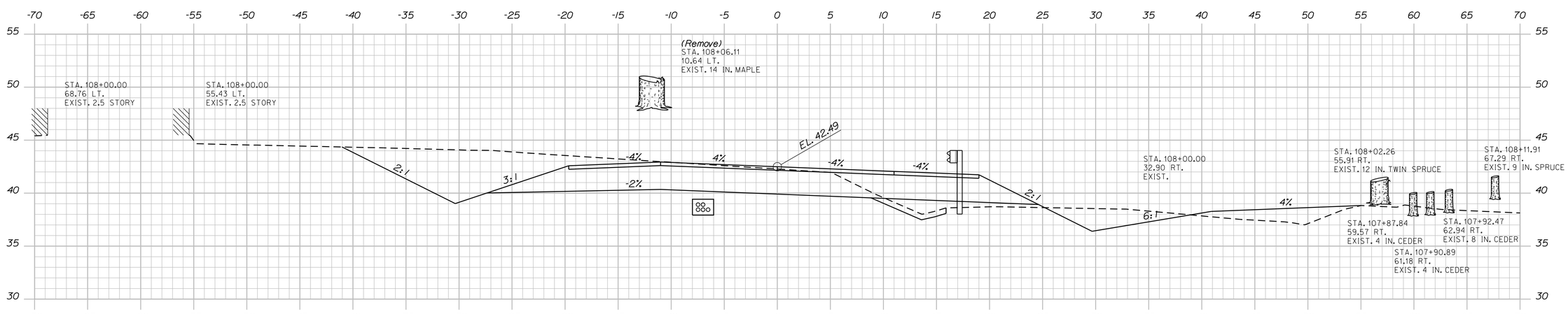

108+00.00

Sta. 108+00.00 to Sta. 108+25.00

STATE OF MAINE
DEPARTMENT OF TRANSPORTATION

AC-BH-1267(400)

PIN 12674.00

BRIDGE NO. 2506

BRIDGE PLANS

PROJ. MANAGER	N. Benoit	BY	DATE
DESIGN-DETAILED	Team South	DMD/DMS	May 2012
CHECKED-REVIEWED	------	------	------
DESIGN2-DETAILED2	------	------	------
DESIGN3-DETAILED3	------	------	------
REVISIONS 1	------	------	------
REVISIONS 2	------	------	------
REVISIONS 3	------	------	------
REVISIONS 4	------	------	------
FIELD CHANGES	------	------	------

SIGNATURE

P.E. NUMBER

DATE

MAINE KENNEBEC BRIDGE
KENNEBEC RIVER
RICHMOND, SAGADAHOC CTY. DRESDEN, LINCOLN CTY.

CROSS SECTIONS: RTE. 197 (RICHMOND)

SHEET NUMBER
42
OF 238

Filename: ...\042_Xsect_Route 197_Richmond_108+00to108+25.dgn Date:3/27/2013
Username: dana.damren

Sta. 108+74.6 to 109+97.1
Install 125 L.F. GR Type 3c

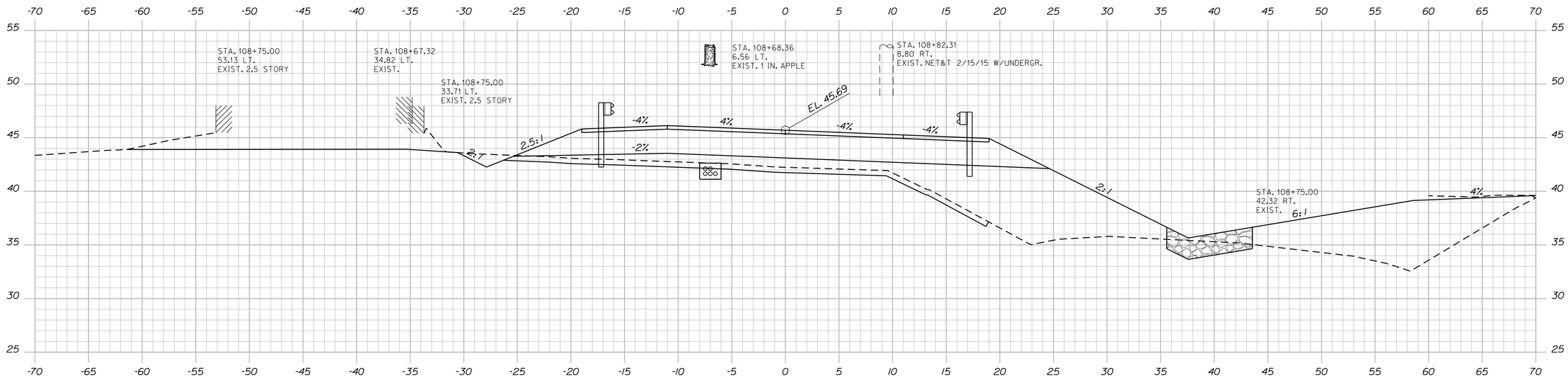

108+75.00

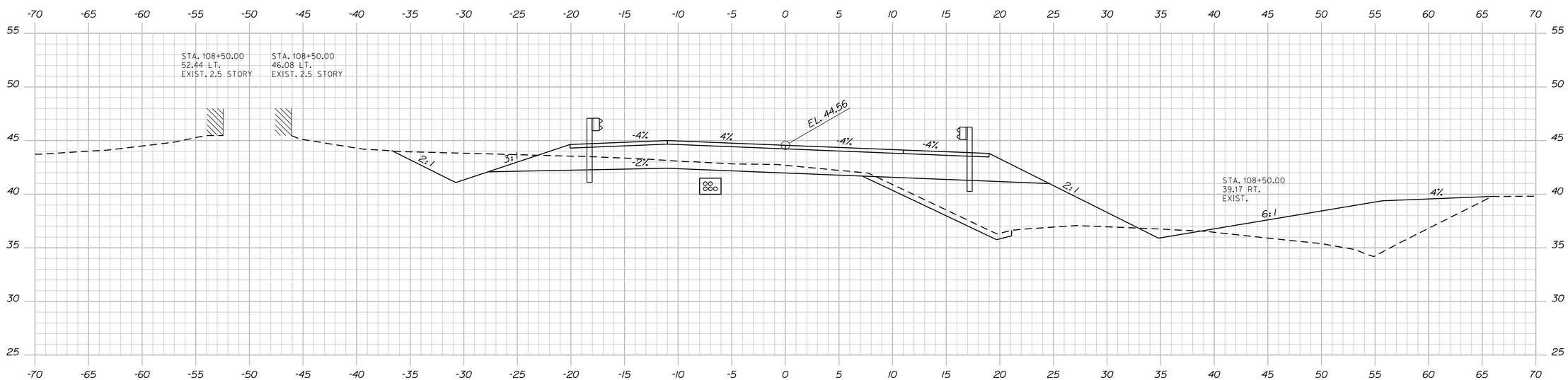

108+50.00

STATE OF MAINE
DEPARTMENT OF TRANSPORTATION

AC-BH-1267(400)

PIN 12674.00

BRIDGE NO. 2506

BRIDGE PLANS

PROJ. MANAGER	N. Benoit	BY	DATE
DESIGN-DETAILED	Team South	DMD/DMS	May 2012
CHECKED-REVIEWED	------	------	------
DESIGN2-DETAILED2	------	------	------
DESIGN3-DETAILED3	------	------	------
REVISIONS 1	------	------	------
REVISIONS 2	------	------	------
REVISIONS 3	------	------	------
REVISIONS 4	------	------	------
FIELD CHANGES	------	------	------

SIGNATURE

P.E. NUMBER

DATE

MAINE KENNEBEC BRIDGE
KENNEBEC RIVER
RICHMOND, SAGADAHOC CTY. DRESDEN, LINCOLN CTY.

CROSS SECTIONS: RTE. 197 (RICHMOND)

SHEET NUMBER
43
OF 238

Sta. 108+50.00 to Sta. 108+75.00

Filename: ...\043_Xsect_Route 197_Richmond_108+50to108+75.dgn
Username: dana.damren
Date:3/27/2013

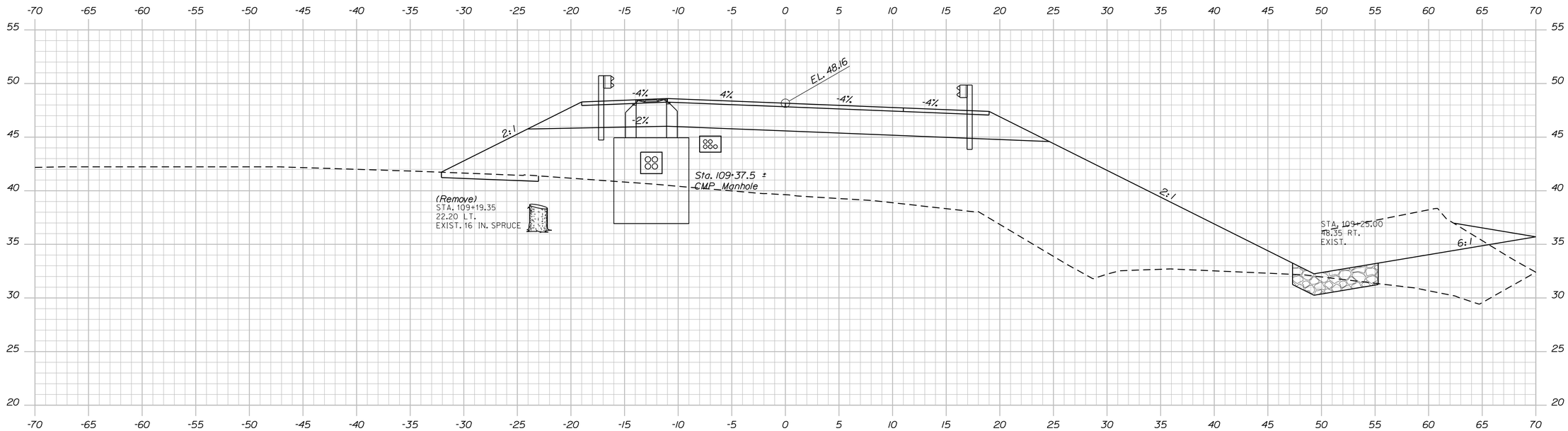

109+25.00

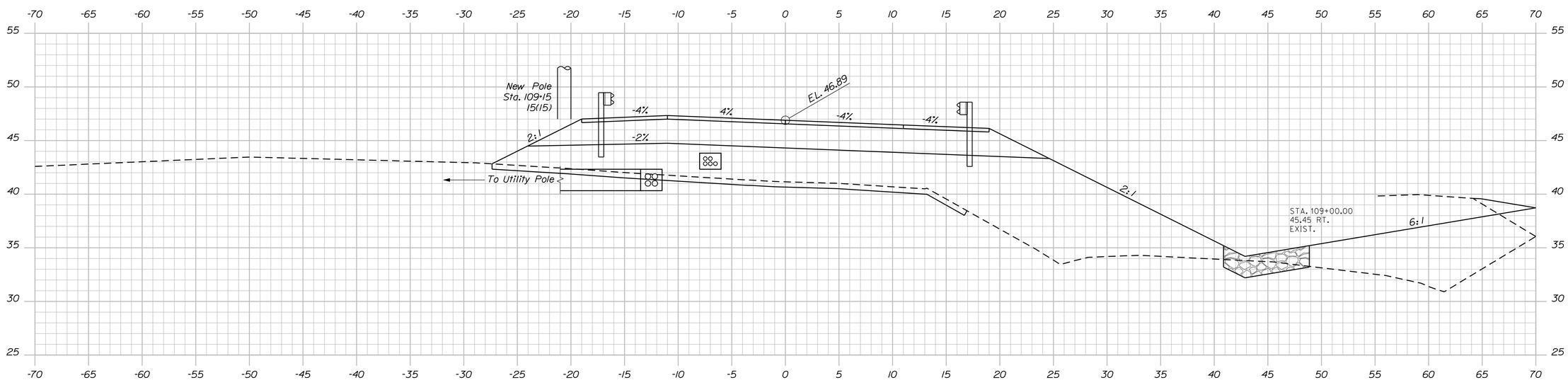

109+00.00

STATE OF MAINE
DEPARTMENT OF TRANSPORTATION

AC-BH-1267(400)

PIN 12674.00

BRIDGE NO. 2506

BRIDGE PLANS

PROJ. MANAGER	N. Benoit	BY	DATE
DESIGN-DETAILED	Team South	DMD/DMS	May 2012
CHECKED-REVIEWED	------	------	------
DESIGN2-DETAILED2	------	------	------
DESIGN3-DETAILED3	------	------	------
REVISIONS 1	------		------
REVISIONS 2	------		------
REVISIONS 3	------		------
REVISIONS 4	------		------
FIELD CHANGES	------		------

SIGNATURE

P.E. NUMBER

DATE

MAINE KENNEBEC BRIDGE
KENNEBEC RIVER
RICHMOND, SAGADAHOC CTY. DRESDEN, LINCOLN CTY.

CROSS SECTIONS: RTE. 197 (RICHMOND)

SHEET NUMBER

44

OF 238

Sta. 109+00.00 to Sta. 109+25.00

Filename: ...\044_Xsect_Route 197_Richmond_109+00to109+25.dgn

Username: dana.damren

Date:3/27/2013

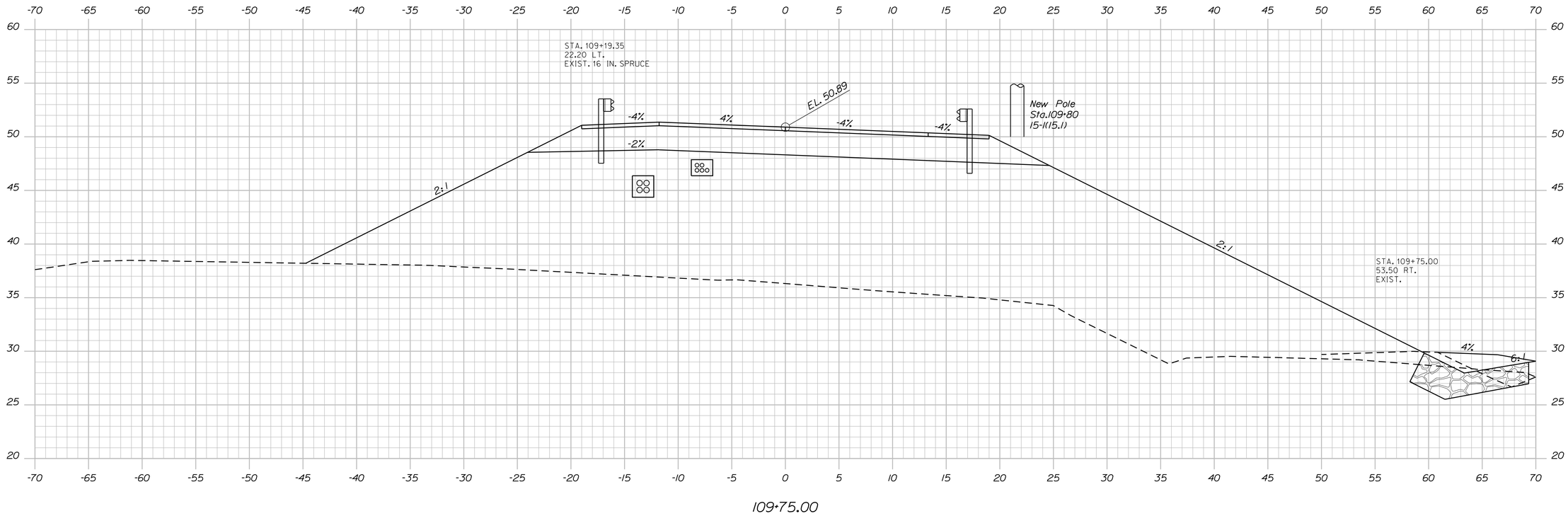

109+75.00

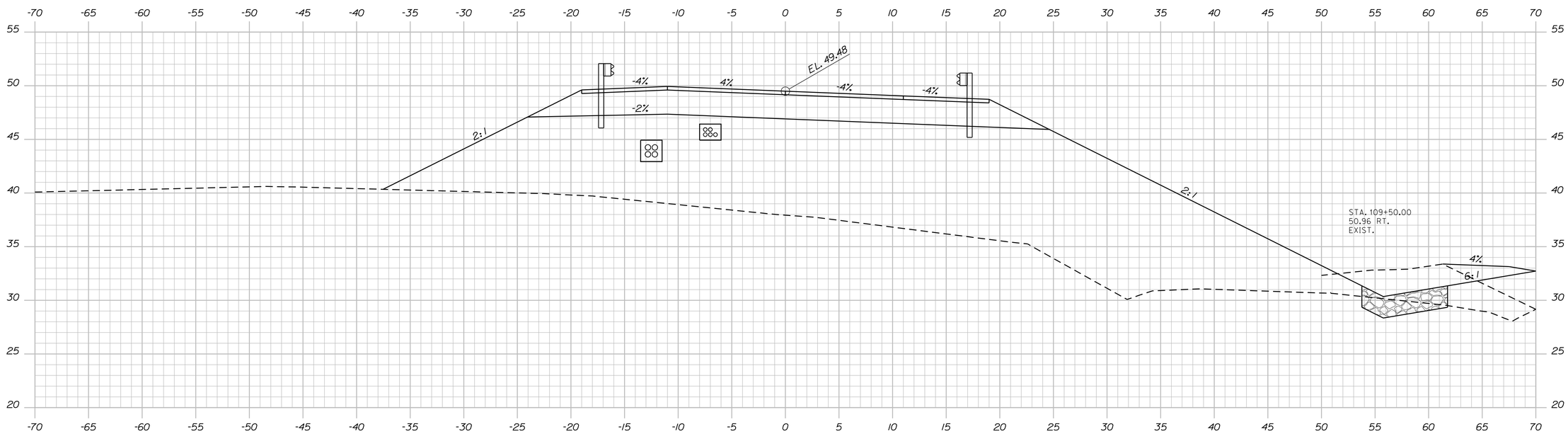

109+50.00

STATE OF MAINE
DEPARTMENT OF TRANSPORTATION

AC-BH-1267(400)

PIN 12674.00

BRIDGE NO. 2506

BRIDGE PLANS

PROJ. MANAGER	N. Benoit		
DESIGN-DETAILED	Team South	DMD/DMS	May 2012
CHECKED-REVIEWED	------	------	------
DESIGN2-DETAILED2	------	------	------
DESIGN3-DETAILED3	------	------	------
REVISIONS 1	------	------	------
REVISIONS 2	------	------	------
REVISIONS 3	------	------	------
REVISIONS 4	------	------	------
FIELD CHANGES	------	------	------

SIGNATURE

P.E. NUMBER

DATE

MAINE KENNEBEC BRIDGE
KENNEBEC RIVER
RICHMOND, SAGADAHOC CTY. DRESDEN, LINCOLN CTY.

CROSS SECTIONS: RTE. 197 (RICHMOND)

SHEET NUMBER

45

OF 238

Sta. 109+50.00 to Sta. 109+75.00

Filename: ...\045_Xsect_Route 197_Richmond_109+50.dgn Date:3/27/2013 Username: dana.damren

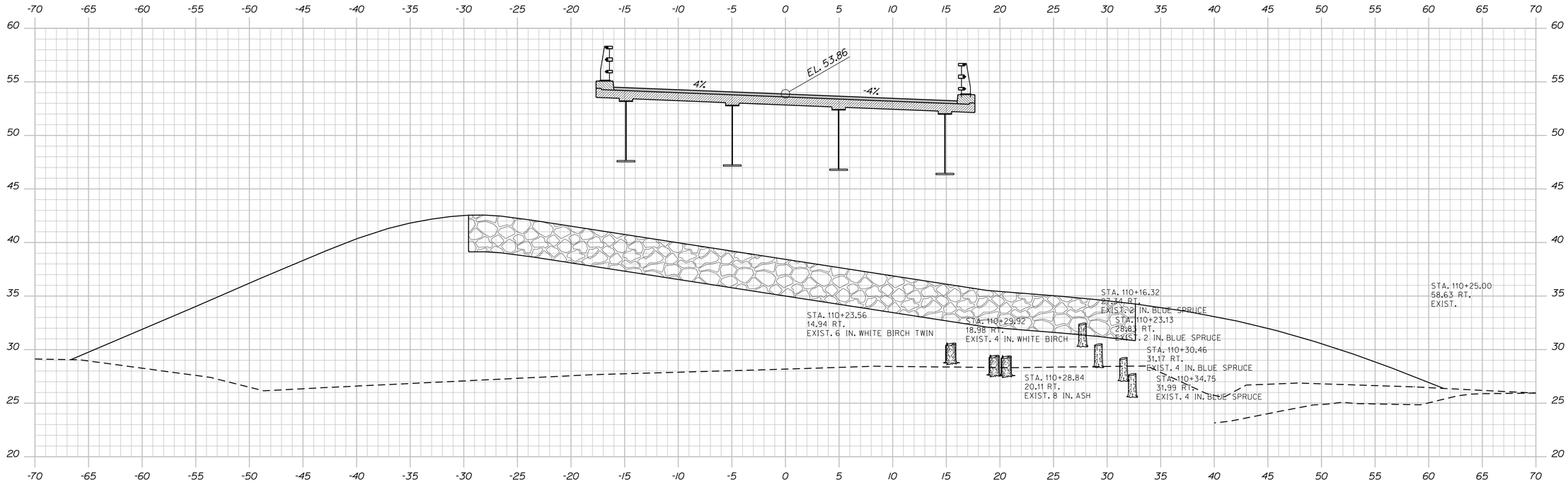

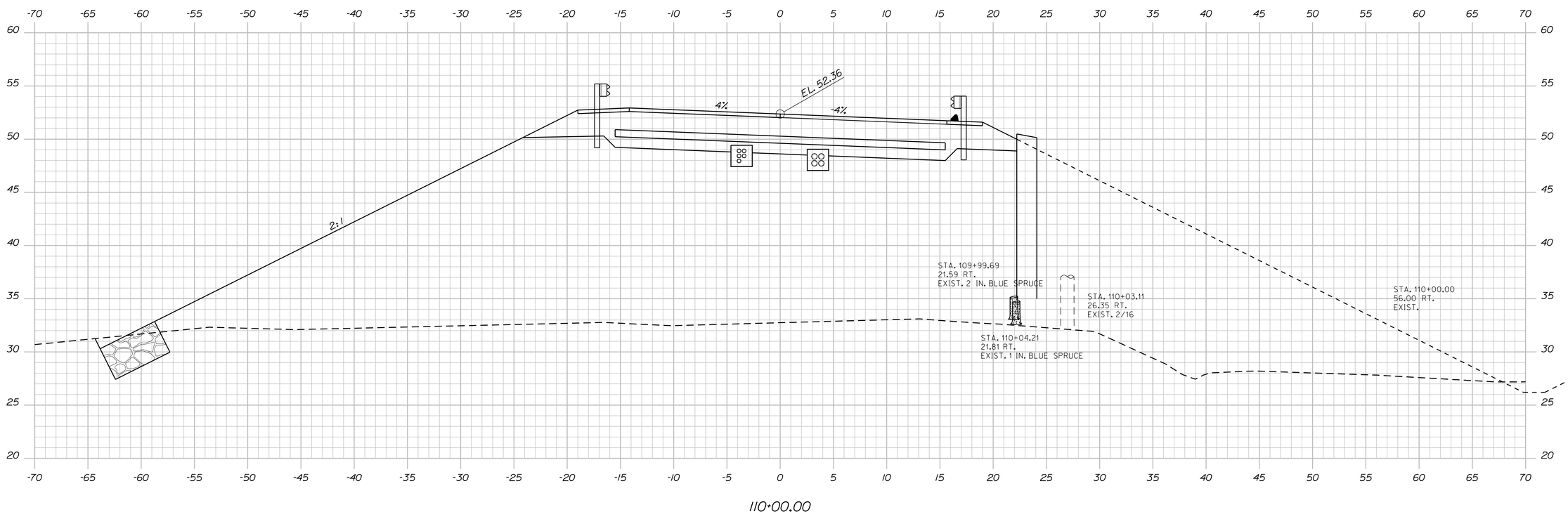

STATE OF MAINE
DEPARTMENT OF TRANSPORTATION

AC-BH-1267(400)

PIN 12674.00

BRIDGE NO. 2506

BRIDGE PLANS

	BY	DATE
PROJ. MANAGER	N. Benoit	
DESIGN-DETAILED	Team South	May 2012
CHECKED-REVIEWED	DMD/DMS	
DESIGN2-DETAILED2		
DESIGN3-DETAILED3		
REVISIONS 1		
REVISIONS 2		
REVISIONS 3		
REVISIONS 4		
FIELD CHANGES		

SIGNATURE

P.E. NUMBER

DATE

MAINE KENNEBEC BRIDGE
KENNEBEC RIVER
RICHMOND, SAGADAHOC CTY. DRESDEN, LINCOLN CTY.

CROSS SECTIONS: RTE. 197 (RICHMOND)

SHEET NUMBER
46
OF 238

Sta. 110+00.00 to Sta. 110+25.00

Filename: ...\046_Xsect_Route 197_Richmond_110+00_110+25.dgn Username: dana.damren Date:3/27/2013

Filename: ...\047_Xsect_Route 197_Dresden_124+75.dgn BRIDGE Date:3/27/2013

Username: dana.damren

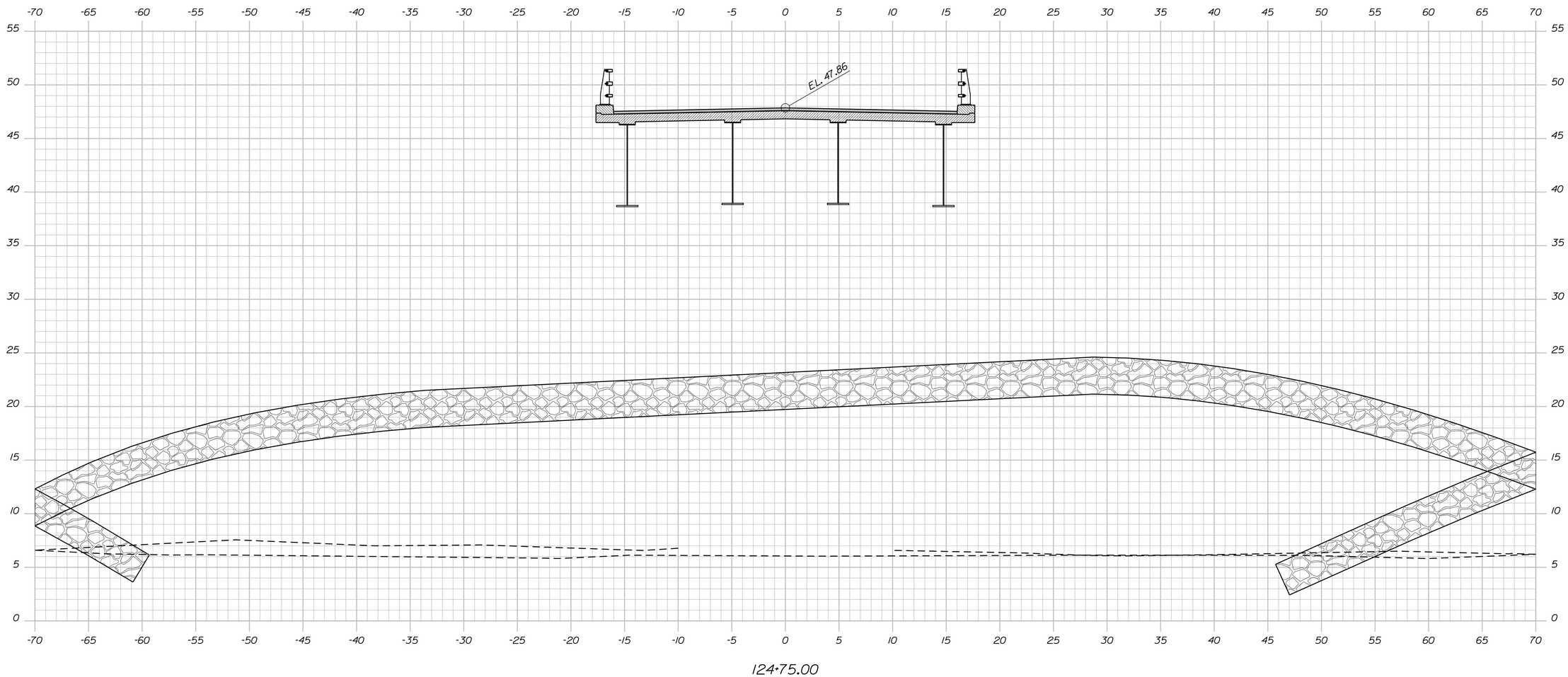

STATE OF MAINE
DEPARTMENT OF TRANSPORTATION

AC-BH-1267(400)

PIN 12674.00

BRIDGE NO. 2506

BRIDGE PLANS

PROJ. MANAGER	N. Benoit			
DESIGN-DETAILED	Team South	BY	DATE	
CHECKED-REVIEWED	------	DMD/DMS	May 2012	
DESIGN2-DETAILED2	------	------	------	SIGNATURE
DESIGN3-DETAILED3	------	------	------	P.E. NUMBER
REVISIONS 1	------	------	------	
REVISIONS 2	------	------	------	DATE
REVISIONS 3	------	------	------	
REVISIONS 4	------	------	------	
FIELD CHANGES	------	------	------	

MAINE KENNEBEC BRIDGE
KENNEBEC RIVER
RICHMOND, SAGADAHOC CTY. DRESDEN, LINCOLN CTY.

CROSS SECTIONS: RTE. 197 (DRESDEN)

SHEET NUMBER

47

OF 238

Sta. 124+75.00 to Sta. 124+75.00

Filename: ...\048_Xsect_Route 197_Dresden_125+00\048_Xsect_Route 197_Dresden_125+00_BRIDGE Username: dana.damren Date:3/27/2013

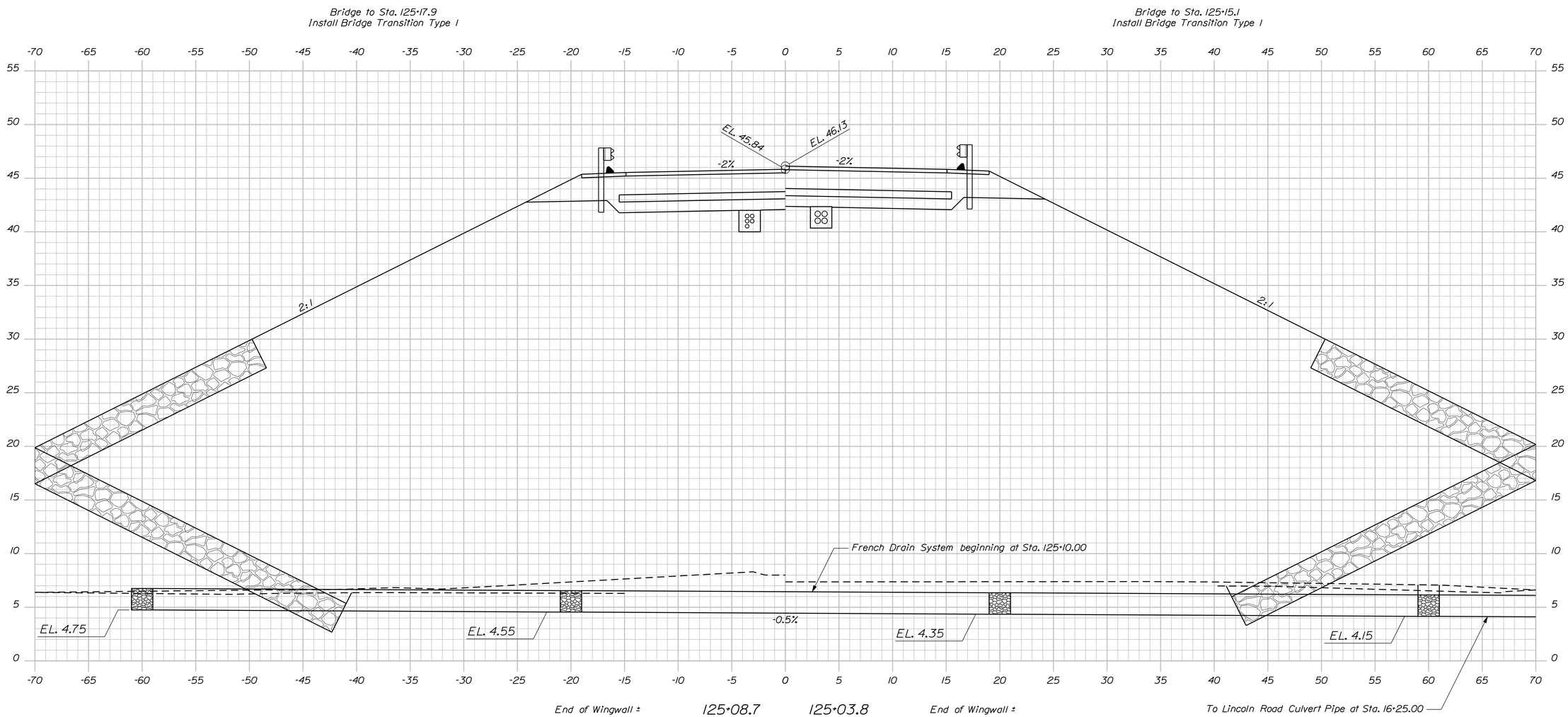

STATE OF MAINE
DEPARTMENT OF TRANSPORTATION

AC-BH-1267(400)

PIN 12674.00

BRIDGE NO. 2506

BRIDGE PLANS

PROJ. MANAGER	N. Benoit	BY	DATE
DESIGN-DETAILED	Team South	DMD/DMS	May 2012
CHECKED-REVIEWED	------	------	------
DESIGN2-DETAILED2	------	------	------
DESIGN3-DETAILED3	------	------	------
REVISIONS 1	------	------	------
REVISIONS 2	------	------	------
REVISIONS 3	------	------	------
REVISIONS 4	------	------	------
FIELD CHANGES	------	------	------

SIGNATURE

P.E. NUMBER

DATE

MAINE KENNEBEC BRIDGE
KENNEBEC RIVER
RICHMOND, SAGADAHOC CTY. DRESDEN, LINCOLN CTY.

CROSS SECTIONS: RTE. 197 (DRESDEN)

SHEET NUMBER

48

OF 238

Sta. 125+00.00 to Sta. 125+00.00

Filename: ...\049_Xsect_Route 197_Dresden_125+25_BRIDGE Username: dana.damren Date:3/27/2013

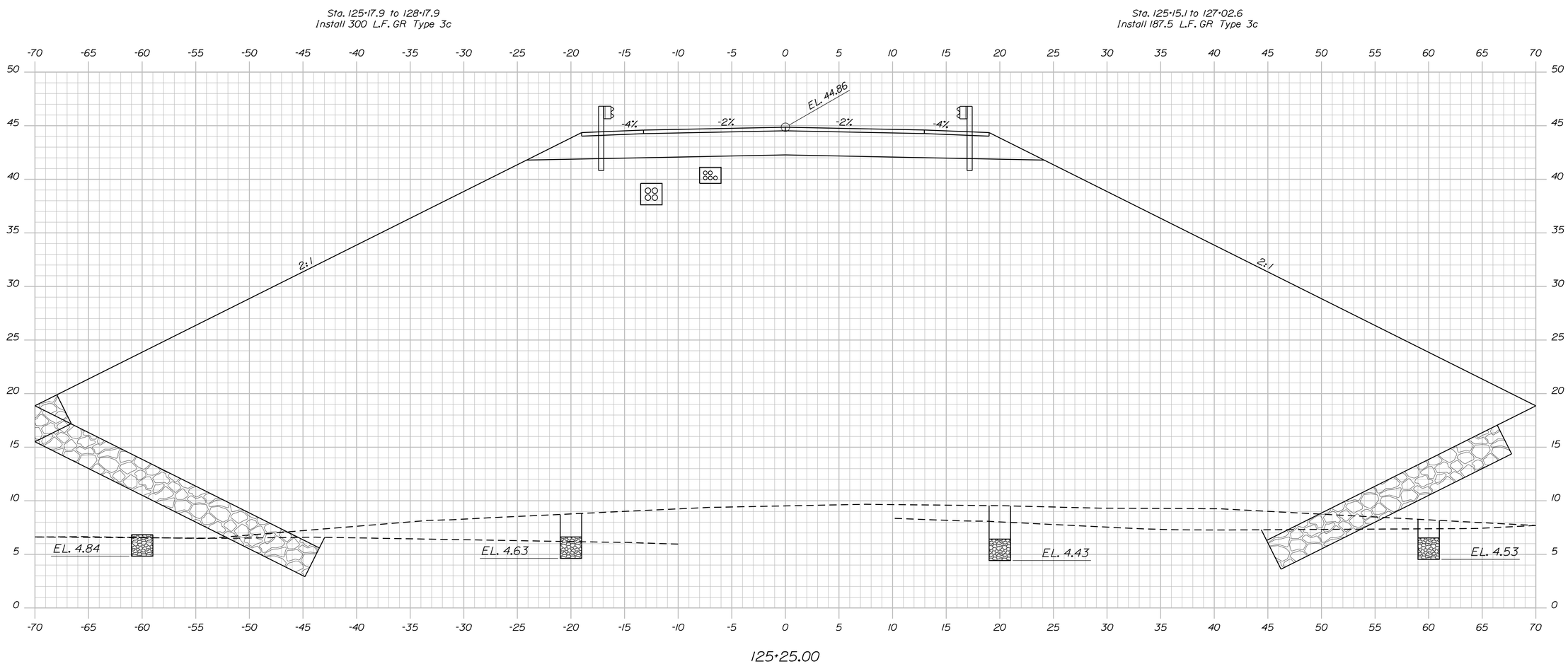

STATE OF MAINE
DEPARTMENT OF TRANSPORTATION

AC-BH-1267(400)

PIN 12674.00

BRIDGE NO. 2506

BRIDGE PLANS

PROJ. MANAGER	N. Benoit	BY	DATE
DESIGN-DETAILED	Team South	DMD/DMS	May 2012
CHECKED-REVIEWED	------	------	------
DESIGN2-DETAILED2	------	------	------
DESIGN3-DETAILED3	------	------	------
REVISIONS 1	------	------	------
REVISIONS 2	------	------	------
REVISIONS 3	------	------	------
REVISIONS 4	------	------	------
FIELD CHANGES	------	------	------

SIGNATURE

P.E. NUMBER

DATE

MAINE KENNEBEC BRIDGE
KENNEBEC RIVER
RICHMOND, SAGADAHOC CTY. DRESDEN, LINCOLN CTY.

CROSS SECTIONS: RTE. 197 (DRESDEN)

SHEET NUMBER

49

OF 238

Sta. 125+25.00 to Sta. 125+25.00

Filename: ...\050_Xsect_Route 197_Dresden_125+50.dgn Username: dana.damren Date:3/27/2013

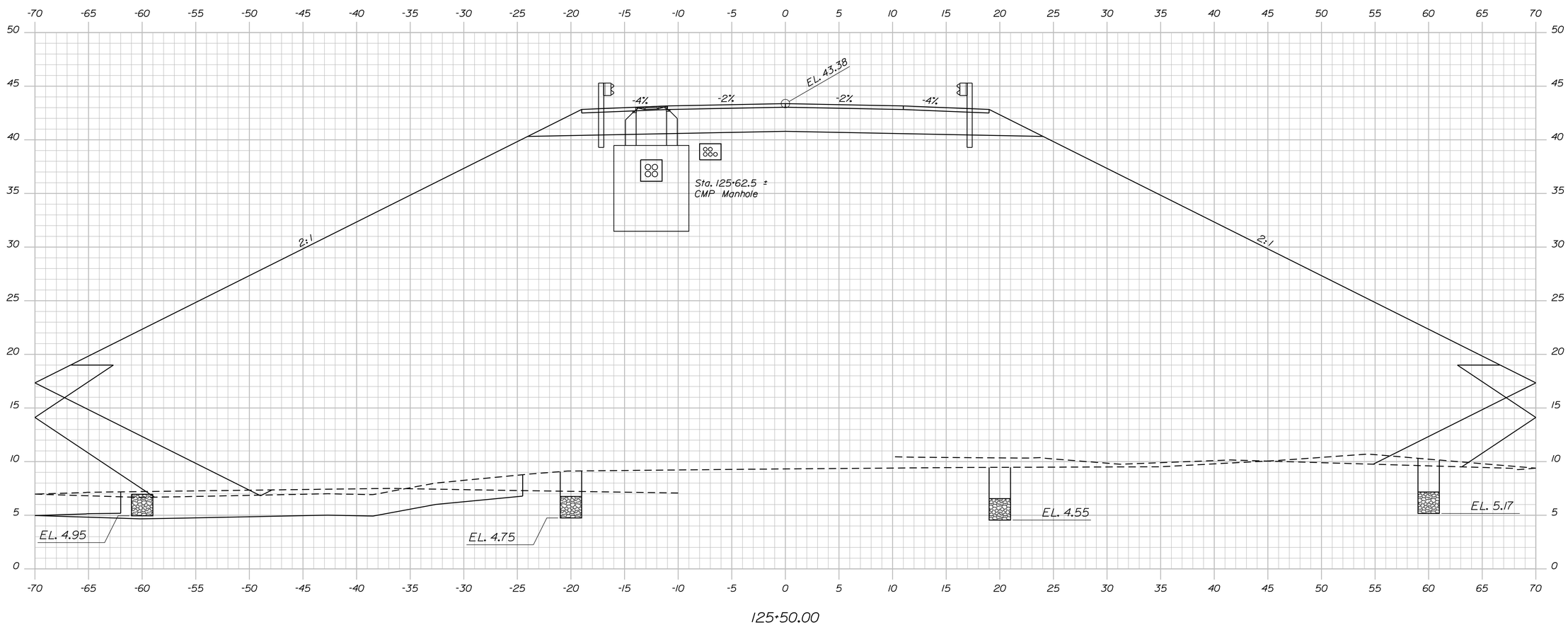

STATE OF MAINE
DEPARTMENT OF TRANSPORTATION

AC-BH-1267(400)

PIN 12674.00

BRIDGE NO. 2506 BRIDGE PLANS

PROJ. MANAGER	N. Benoit	BY	DATE
DESIGN-DETAILED	Team South	DMD/DMS	May 2012
CHECKED-REVIEWED	------	------	------
DESIGN2-DETAILED2	------	------	------
DESIGN3-DETAILED3	------	------	------
REVISIONS 1	------	------	------
REVISIONS 2	------	------	------
REVISIONS 3	------	------	------
REVISIONS 4	------	------	------
FIELD CHANGES	------	------	------

SIGNATURE

P.E. NUMBER

DATE

MAINE KENNEBEC BRIDGE
KENNEBEC RIVER
RICHMOND, SAGADAHOC CTY. DRESDEN, LINCOLN CTY.

CROSS SECTIONS: RTE. 197 (DRESDEN)

SHEET NUMBER

50

OF 238

Sta. 125+50.00 to Sta. 125+50.00

Filename: ...\051_Xsect_Route 197_Dresden_125+75.00.dgn Username: dana.damren Date:3/27/2013

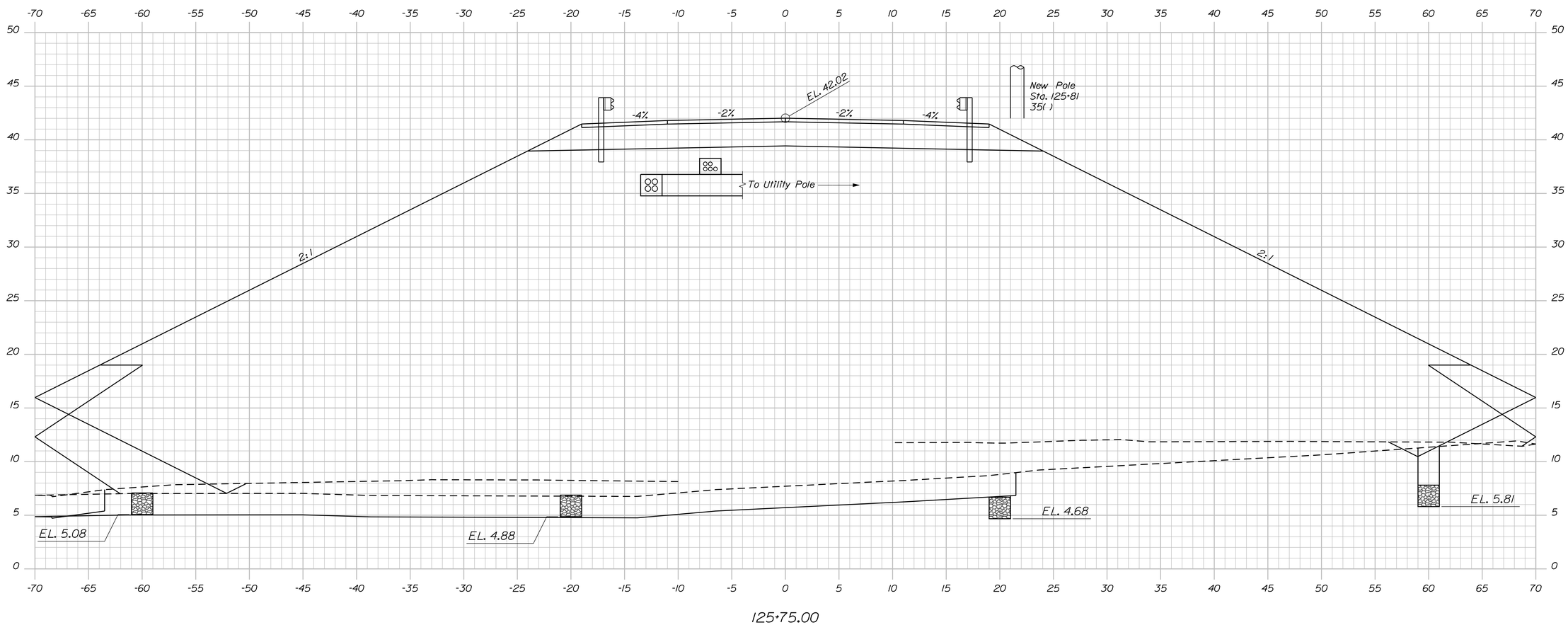

STATE OF MAINE
DEPARTMENT OF TRANSPORTATION

AC-BH-1267(400)

PIN 12674.00

BRIDGE NO. 2506

BRIDGE PLANS

PROJ. MANAGER	N. Benoit	BY	DATE
DESIGN-DETAILED	Team South	DMD/DMS	May 2012
CHECKED-REVIEWED	------	------	------
DESIGN2-DETAILED2	------	------	------
DESIGN3-DETAILED3	------	------	------
REVISIONS 1	------	------	------
REVISIONS 2	------	------	------
REVISIONS 3	------	------	------
REVISIONS 4	------	------	------
FIELD CHANGES	------	------	------

SIGNATURE

P.E. NUMBER

DATE

MAINE KENNEBEC BRIDGE
KENNEBEC RIVER
RICHMOND, SAGADAHOC CTY. DRESDEN, LINCOLN CTY.

CROSS SECTIONS: RTE. 197 (DRESDEN)

SHEET NUMBER

51

OF 238

Sta. 125+75.00 to Sta. 125+75.00

Filename: ...\052_Xsect_Route 197_Dresden_126+00.dgn Username: dana.damren Date:3/27/2013

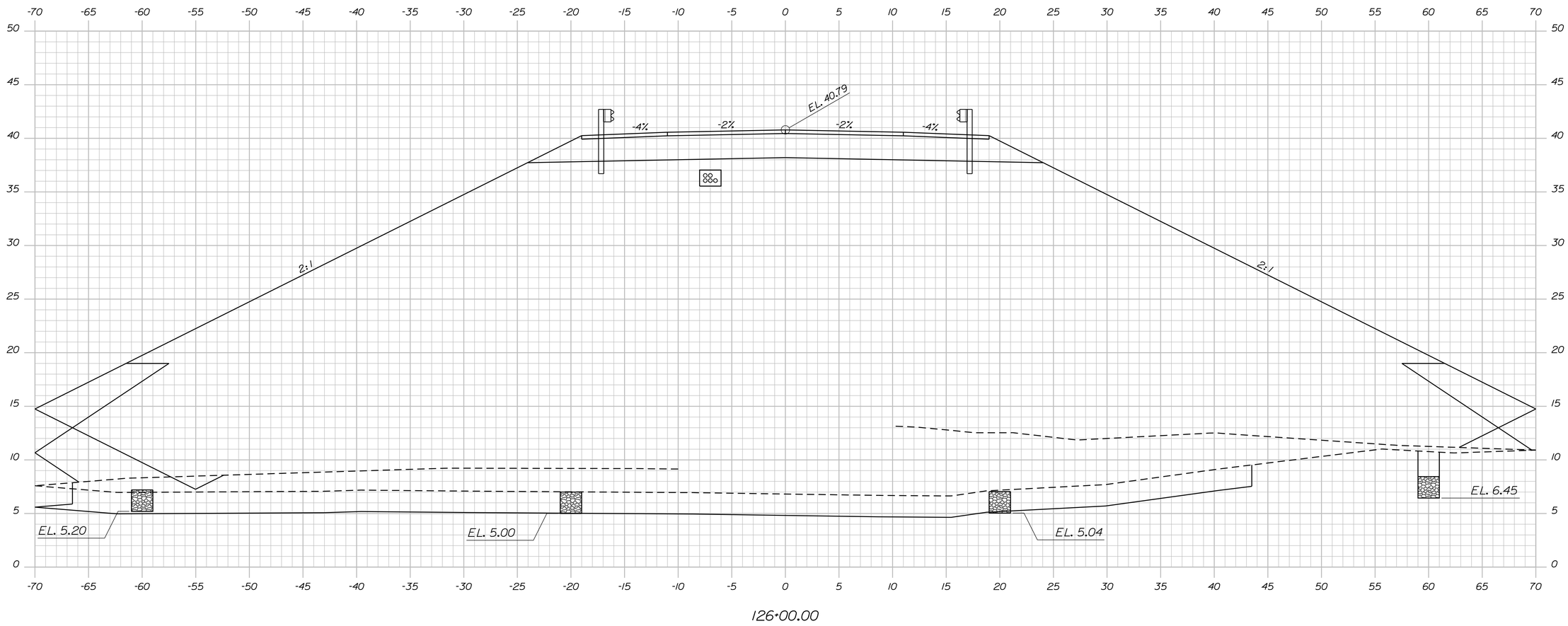

STATE OF MAINE
DEPARTMENT OF TRANSPORTATION

AC-BH-1267(400)

PIN 12674.00

BRIDGE NO. 2506

BRIDGE PLANS

PROJ. MANAGER	N. Benoit	BY	DATE
DESIGN-DETAILED	Team South	DMD/DMS	May 2012
CHECKED-REVIEWED	------	------	------
DESIGN2-DETAILED2	------	------	------
DESIGN3-DETAILED3	------	------	------
REVISIONS 1	------	------	------
REVISIONS 2	------	------	------
REVISIONS 3	------	------	------
REVISIONS 4	------	------	------
FIELD CHANGES	------	------	------

SIGNATURE

P.E. NUMBER

DATE

MAINE KENNEBEC BRIDGE
KENNEBEC RIVER
RICHMOND, SAGADAHOC CTY. DRESDEN, LINCOLN CTY.

CROSS SECTIONS: RTE. 197 (DRESDEN)

SHEET NUMBER

52

OF 238

Sta. 126+00.00 to Sta. 126+00.00

Filename: ...\053_Xsect_Route 197_Dresden_126+25\053_Xsect_Bridge.dgn Date:3/27/2013 Username: dana.damren

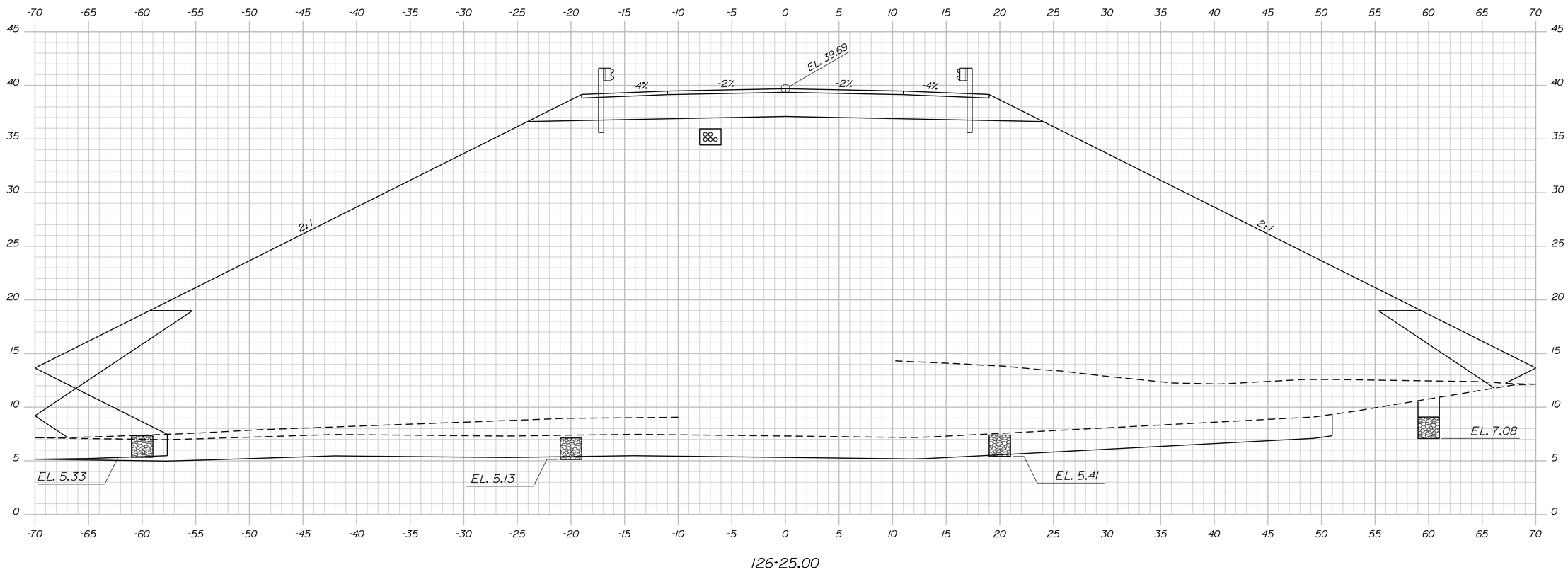

STATE OF MAINE
DEPARTMENT OF TRANSPORTATION

AC-BH-1267(400)

PIN 12674.00

BRIDGE NO. 2506

BRIDGE PLANS

PROJ. MANAGER	N. Benoit	BY	DATE
DESIGN-DETAILED	Team South	DMD/DMS	May 2012
CHECKED-REVIEWED	------	------	------
DESIGN2-DETAILED2	------	------	------
DESIGN3-DETAILED3	------	------	------
REVISIONS 1	------		------
REVISIONS 2	------		------
REVISIONS 3	------		------
REVISIONS 4	------		------
FIELD CHANGES	------		------

SIGNATURE

P.E. NUMBER

DATE

MAINE KENNEBEC BRIDGE
KENNEBEC RIVER
RICHMOND, SAGADAHOC CTY. DRESDEN, LINCOLN CTY.

CROSS SECTIONS: RTE. 197 (DRESDEN)

SHEET NUMBER

53

OF 238

Sta. 126+25.00 to Sta. 126+25.00

Username: dana.damren Date:3/27/2013

Filename: ...\054_Xsect_Route 197_Dresden_126+50.00_BRIDGE

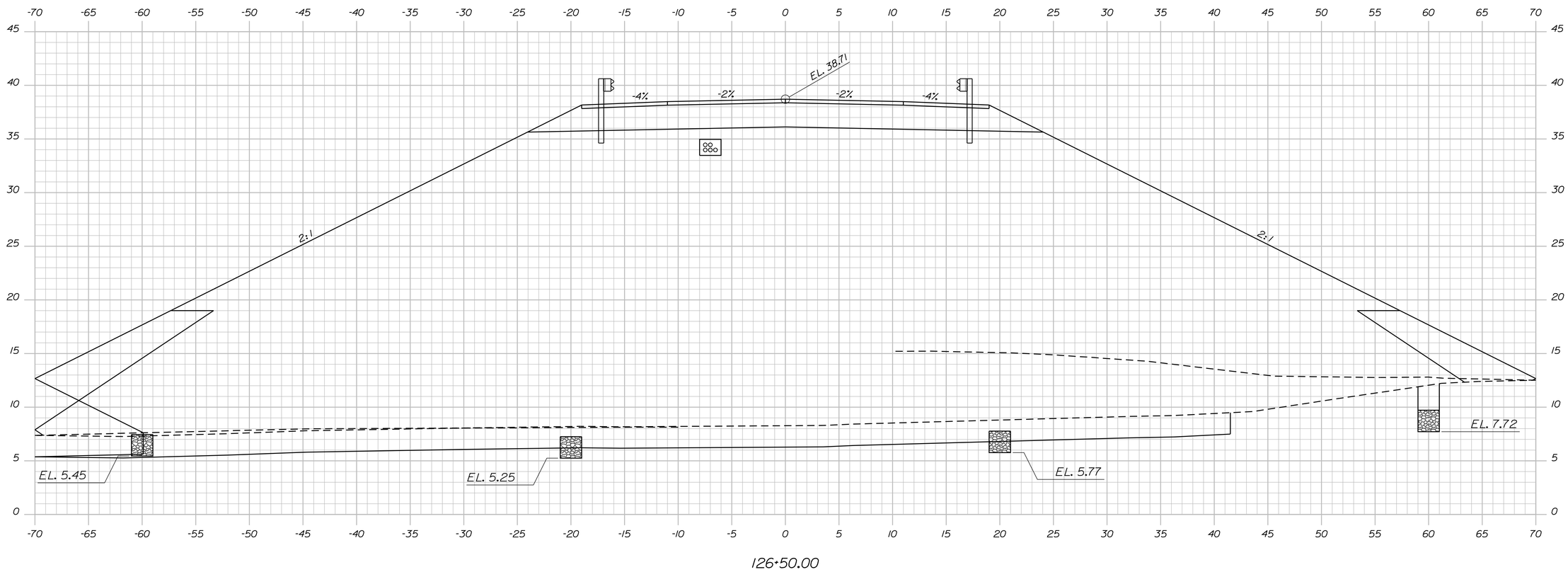

STATE OF MAINE
DEPARTMENT OF TRANSPORTATION

AC-BH-1267(400)

PIN 12674.00

BRIDGE NO. 2506 BRIDGE PLANS

PROJ. MANAGER	N. Benoit	BY	DATE
DESIGN-DETAILED	Team South	DMD/DMS	May 2012
CHECKED-REVIEWED	------	------	------
DESIGN2-DETAILED2	------	------	------
DESIGN3-DETAILED3	------	------	------
REVISIONS 1	------		------
REVISIONS 2	------		------
REVISIONS 3	------		------
REVISIONS 4	------		------
FIELD CHANGES	------		------

SIGNATURE

P.E. NUMBER

DATE

MAINE KENNEBEC BRIDGE
KENNEBEC RIVER
RICHMOND, SAGADAHOC CTY. DRESDEN, LINCOLN CTY.

CROSS SECTIONS: RTE. 197 (DRESDEN)

SHEET NUMBER

54

OF 238

Sta. 126+50.00 to Sta. 126+50.00

Filename: ...\055_Xsect_Route 197_Dresden_126+75.00_BRIDGE
Username: dana.damren
Date:3/27/2013

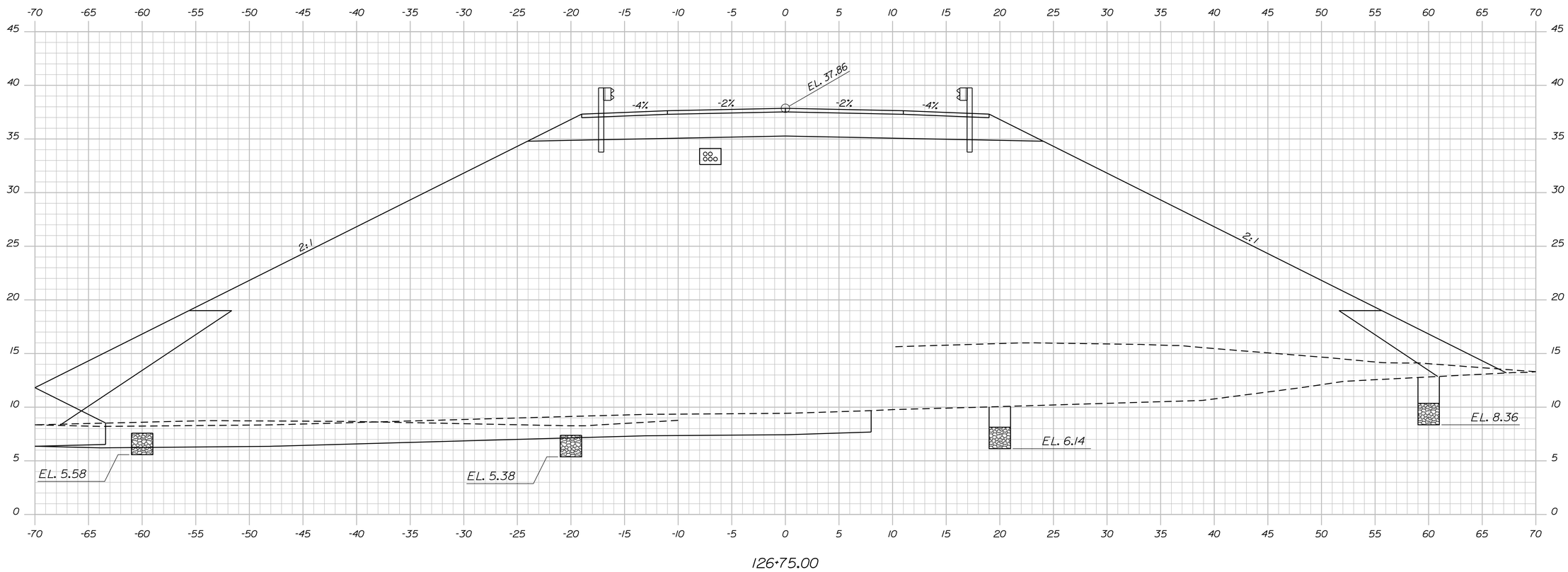

STATE OF MAINE
DEPARTMENT OF TRANSPORTATION

AC-BH-1267(400)

PIN
12674.00

BRIDGE NO. 2506 BRIDGE PLANS

PROJ. MANAGER	N. Benoit	BY	DATE
DESIGN-DETAILED	Team South	DMD/DMS	May 2012
CHECKED-REVIEWED	------	------	------
DESIGN2-DETAILED2	------	------	------
DESIGN3-DETAILED3	------	------	------
REVISIONS 1	------	------	------
REVISIONS 2	------	------	------
REVISIONS 3	------	------	------
REVISIONS 4	------	------	------
FIELD CHANGES	------	------	------

SIGNATURE

P.E. NUMBER

DATE

MAINE KENNEBEC BRIDGE
KENNEBEC RIVER
RICHMOND, SAGADAHOC CTY. DRESDEN, LINCOLN CTY.

CROSS SECTIONS: RTE. 197 (DRESDEN)

SHEET NUMBER
55
OF 238

Sta. 126+75.00 to Sta. 126+75.00

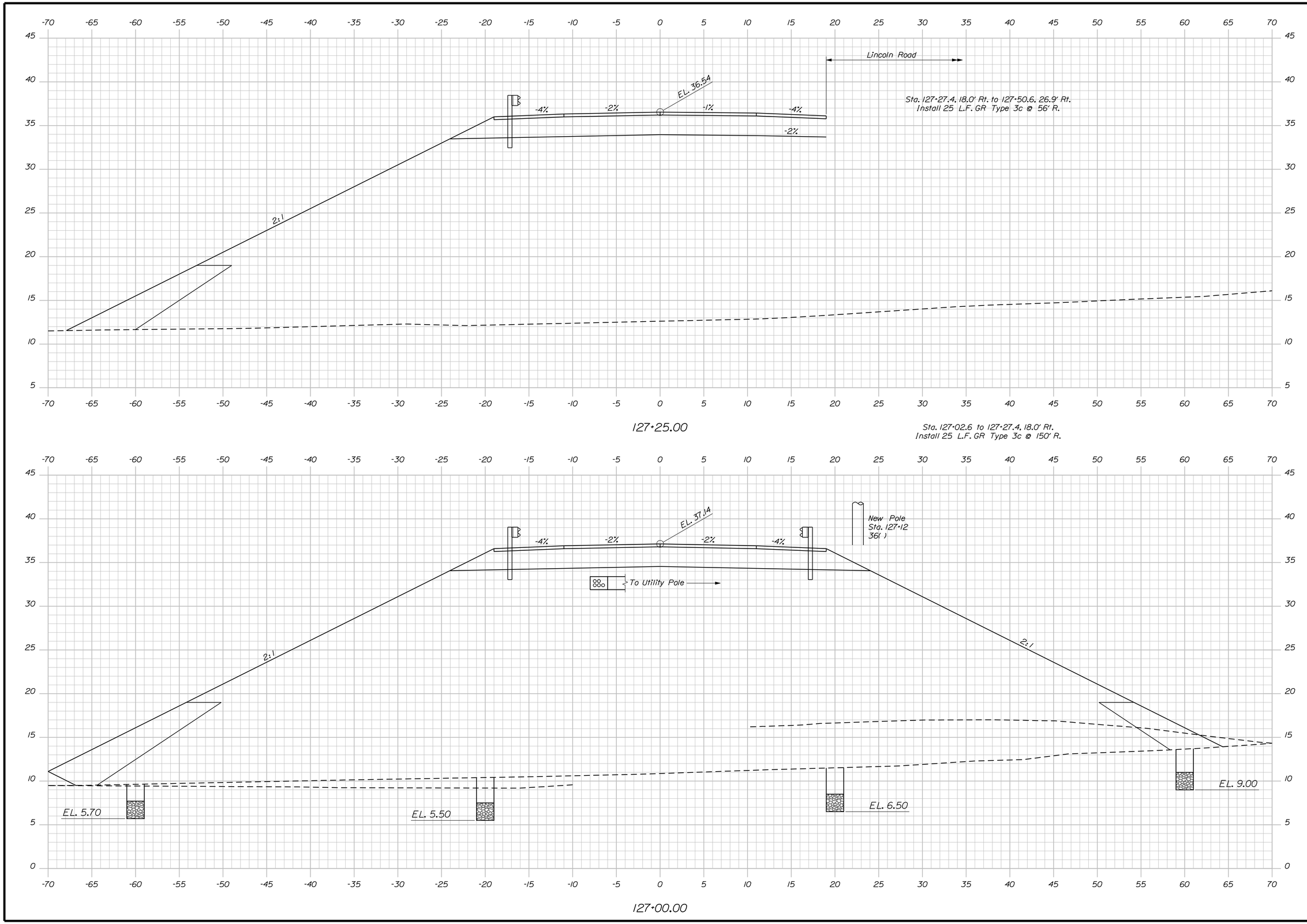

STATE OF MAINE
DEPARTMENT OF TRANSPORTATION

AC-BH-1267(400)

PIN 12674.00

BRIDGE NO. 2506

BRIDGE PLANS

PROJ. MANAGER	N. Benoit		
DESIGN-DETAILED	Team South	DMD/DMS	May 2012
CHECKED-REVIEWED	------	------	------
DESIGN2-DETAILED2	------	------	------
DESIGN3-DETAILED3	------	------	------
REVISIONS 1	------	------	------
REVISIONS 2	------	------	------
REVISIONS 3	------	------	------
REVISIONS 4	------	------	------
FIELD CHANGES	------	------	------

SIGNATURE

P.E. NUMBER

DATE

MAINE KENNEBEC BRIDGE
KENNEBEC RIVER
RICHMOND, SAGADAHOC CTY. DRESDEN, LINCOLN CTY.

CROSS SECTIONS: RTE. 197 (DRESDEN)

SHEET NUMBER
56
OF 238

Sta. 127+00.00 to Sta. 127+25.00

Filename: ...\056_Xsect_Route 197_Dresden_127+00.dgn Date:3/27/2013 Username: dana.damren

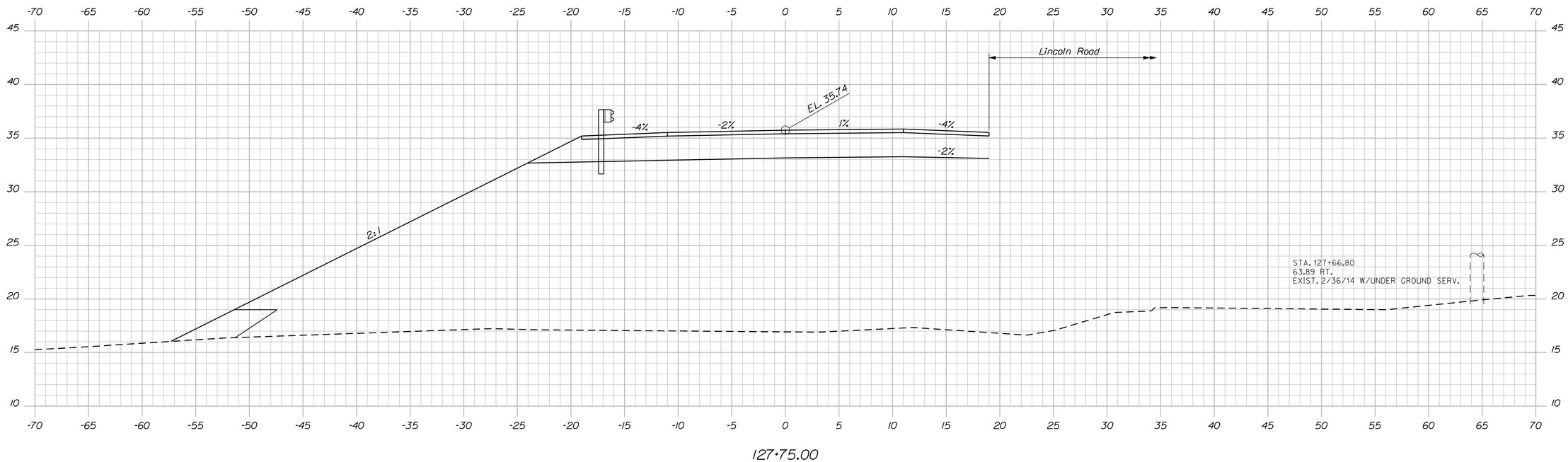

127+75.00

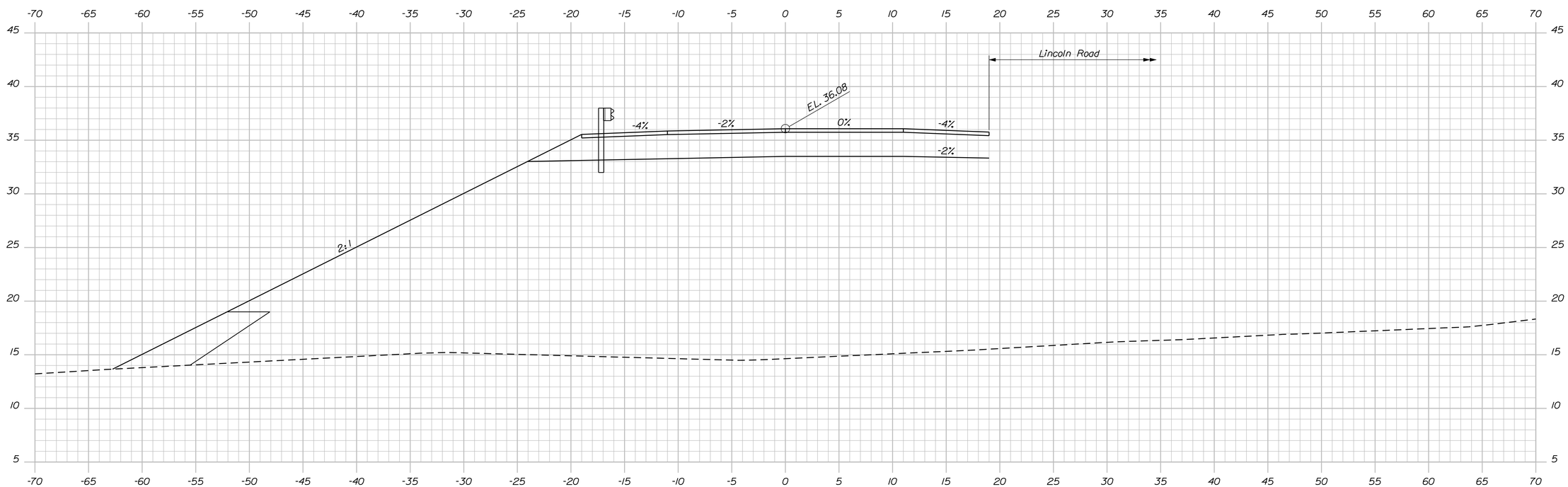

127+50.00

STATE OF MAINE
DEPARTMENT OF TRANSPORTATION

AC-BH-1267(400)

PIN 12674.00

BRIDGE NO. 2506

BRIDGE PLANS

PROJ. MANAGER	N. Benoit	BY	DATE
DESIGN-DETAILED	Team South	DMD/DMS	May 2012
CHECKED-REVIEWED	------	------	------
DESIGN2-DETAILED2	------	------	------
DESIGN3-DETAILED3	------	------	------
REVISIONS 1	------	------	------
REVISIONS 2	------	------	------
REVISIONS 3	------	------	------
REVISIONS 4	------	------	------
FIELD CHANGES	------	------	------

SIGNATURE

P.E. NUMBER

DATE

MAINE KENNEBEC BRIDGE
KENNEBEC RIVER
RICHMOND, SAGADAHOC CTY. DRESDEN, LINCOLN CTY.

CROSS SECTIONS: RTE. 197 (DRESDEN)

SHEET NUMBER

57

OF 238

Sta. 127+50.00 to Sta. 127+75.00

Filename: ...\057_Xsect_Route 197_Dresden_127+50to08bdgnBRIDGE

Username: dana.damren

Date:3/27/2013

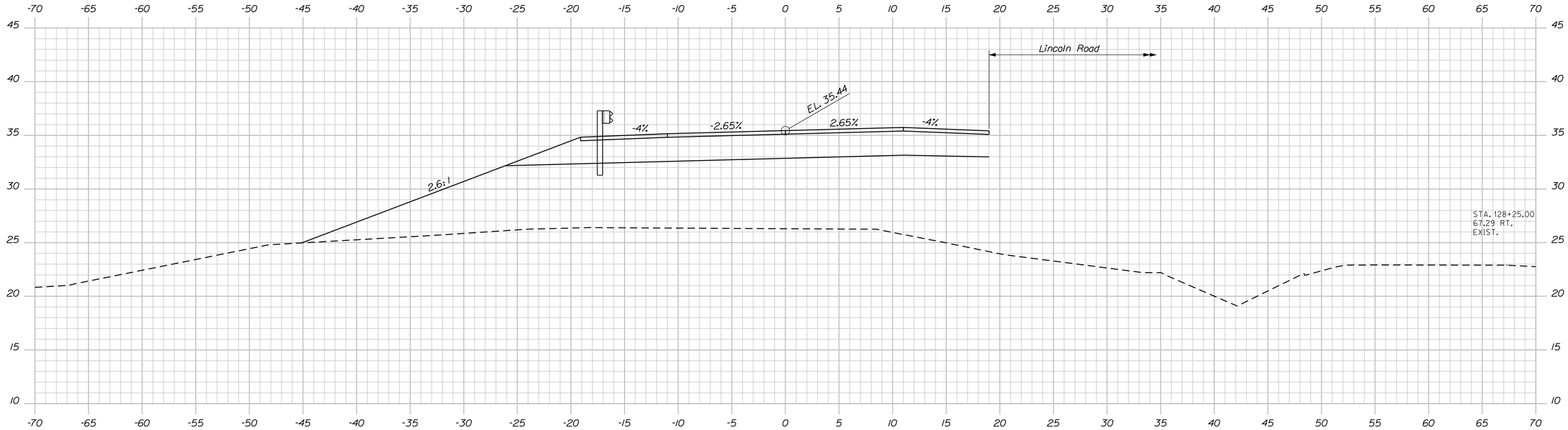

Sta. 128+17.9 to 128+55.5
Install GR 350 Flared Terminal

128+25.00

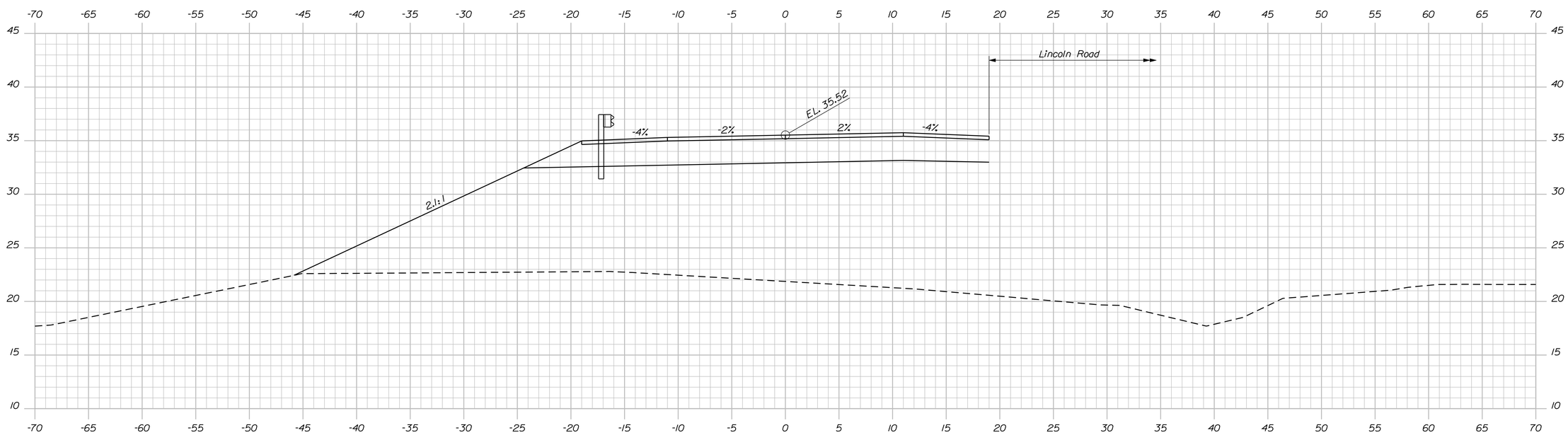

128+00.00

STATE OF MAINE
DEPARTMENT OF TRANSPORTATION

AC-BH-1267(400)

PIN
12674.00

BRIDGE NO. 2506

BRIDGE PLANS

PROJ. MANAGER	N. Benoit	BY	DATE
DESIGN-DETAILED	Team South	DMD/DMS	May 2012
CHECKED-REVIEWED	------	------	------
DESIGN2-DETAILED2	------	------	------
DESIGN3-DETAILED3	------	------	------
REVISIONS 1	------	------	------
REVISIONS 2	------	------	------
REVISIONS 3	------	------	------
REVISIONS 4	------	------	------
FIELD CHANGES	------	------	------

SIGNATURE

P.E. NUMBER

DATE

MAINE KENNEBEC BRIDGE
KENNEBEC RIVER
RICHMOND, SAGADAHOC CTY. DRESDEN, LINCOLN CTY.

CROSS SECTIONS: RTE. 197 (DRESDEN)

SHEET NUMBER
58
OF 238

Sta. 128+00.00 to Sta. 128+25.00

Filename: ...\058_Xsect_Route 197_Dresden_128+00.dgn Date:3/27/2013 Username: dana.damren

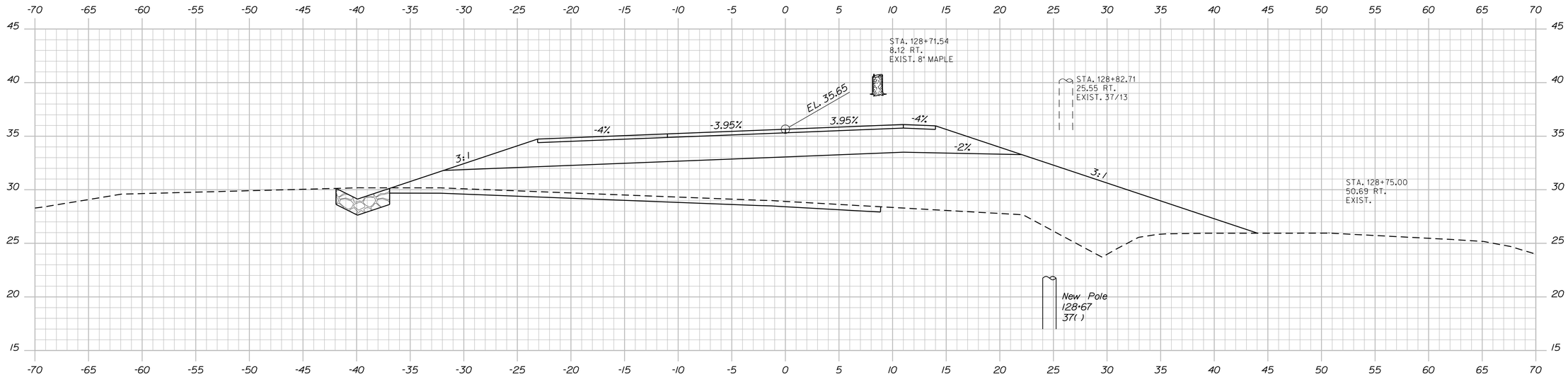

128+75.00

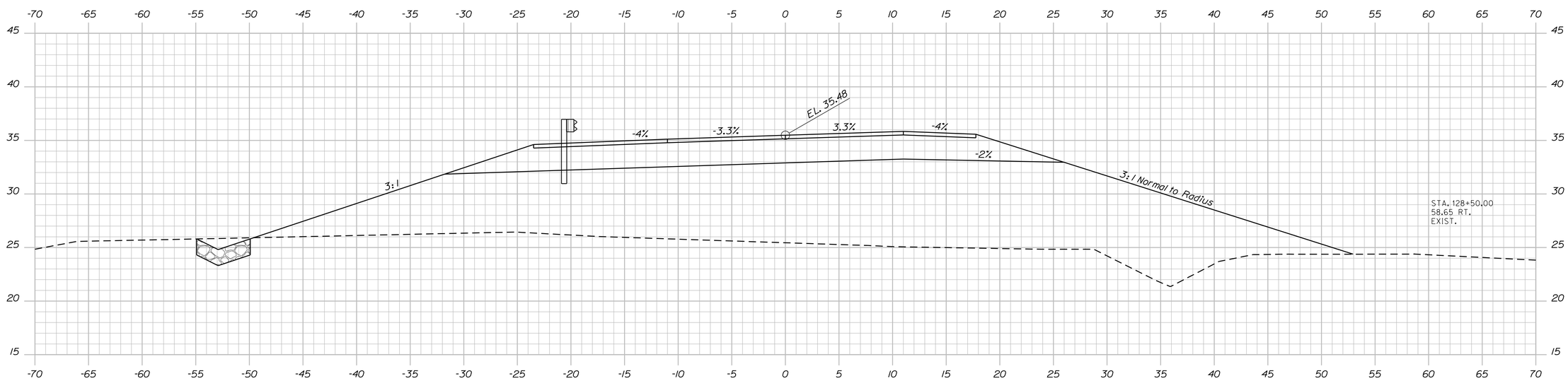

128+50.00

STATE OF MAINE
DEPARTMENT OF TRANSPORTATION

AC-BH-1267(400)

PIN 12674.00

BRIDGE NO. 2506

BRIDGE PLANS

PROJ. MANAGER	N. Benoit		
DESIGN-DETAILED	Team South	DMD/DMS	May 2012
CHECKED-REVIEWED	------	------	------
DESIGN2-DETAILED2	------	------	------
DESIGN3-DETAILED3	------	------	------
REVISIONS 1	------	------	------
REVISIONS 2	------	------	------
REVISIONS 3	------	------	------
REVISIONS 4	------	------	------
FIELD CHANGES	------	------	------

SIGNATURE

P.E. NUMBER

DATE

MAINE KENNEBEC BRIDGE
KENNEBEC RIVER
RICHMOND, SAGADAHOC CTY. DRESDEN, LINCOLN CTY.

CROSS SECTIONS: RTE. 197 (DRESDEN)

SHEET NUMBER

59

OF 238

Sta. 128+50.00 to Sta. 128+75.00

Filename: ...\059_Xsect_Route 197_Dresden_128+50\059_Xsect_Route 197_Dresden_128+50.dgn Date:3/27/2013 Username: dana.damren

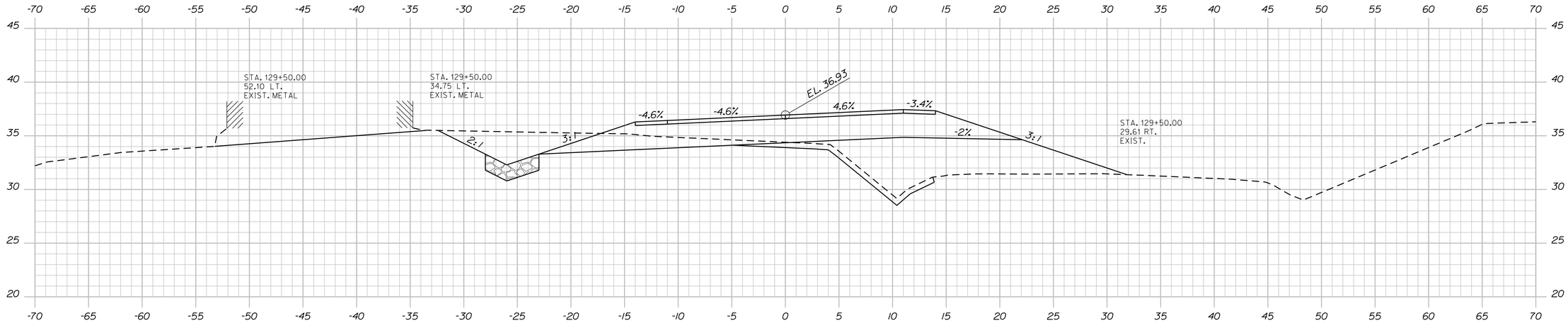

129+50.00

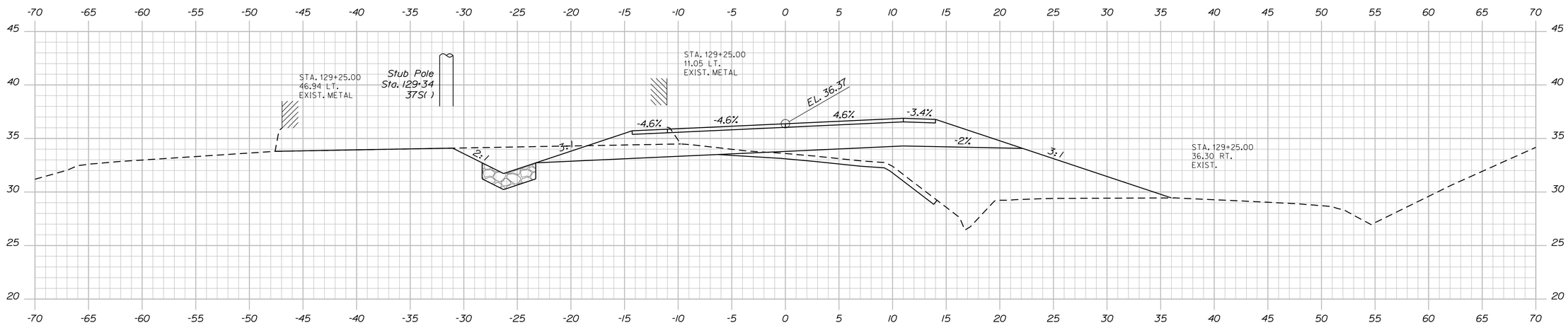

129+25.00

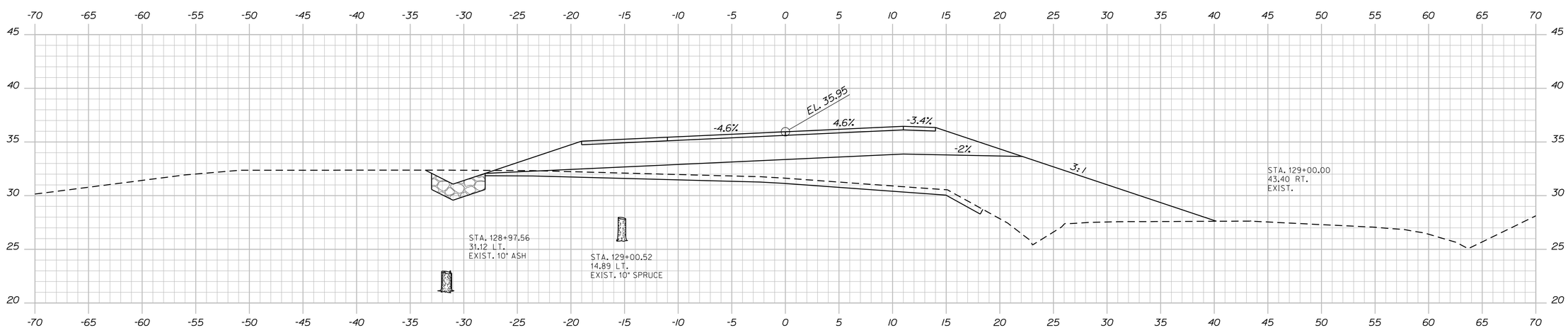

129+00.00

STATE OF MAINE
DEPARTMENT OF TRANSPORTATION

AC-BH-1267(400)

PIN
12674.00

BRIDGE NO. 2506

BRIDGE PLANS

PROJ. MANAGER	N. Benoit	BY	DATE
DESIGN-DETAILED	Team South	DMD/DMS	May 2012
CHECKED-REVIEWED	------	------	------
DESIGN2-DETAILED2	------	------	------
DESIGN3-DETAILED3	------	------	------
REVISIONS 1	------	------	------
REVISIONS 2	------	------	------
REVISIONS 3	------	------	------
REVISIONS 4	------	------	------
FIELD CHANGES	------	------	------

SIGNATURE

P.E. NUMBER

DATE

MAINE KENNEBEC BRIDGE
KENNEBEC RIVER
RICHMOND, SAGADAHOC CTY. DRESDEN, LINCOLN CTY.

CROSS SECTIONS: RTE. 197 (DRESDEN)

SHEET NUMBER

60

OF 238

Filename: ...\060_Xsect_Route 197_Dresden_129+00.dgn Username: dana.damren Date:3/27/2013

Sta. 129+00.00 to Sta. 129+50.00

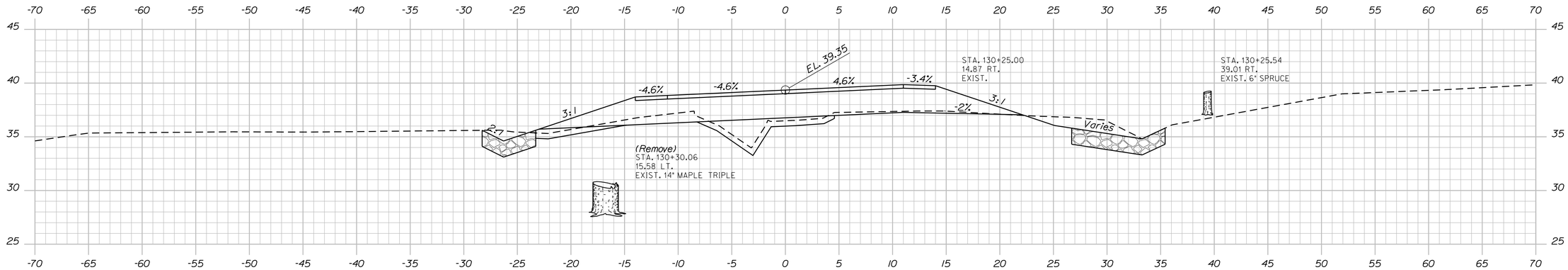

130+25.00

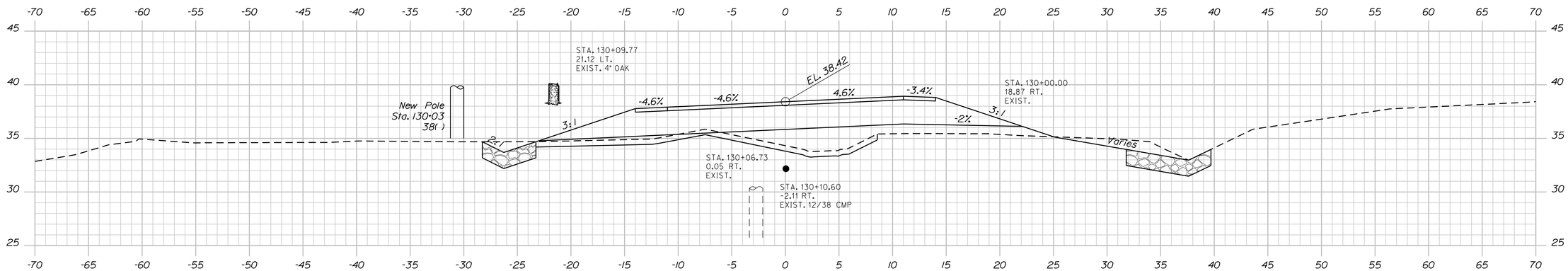

130+00.00

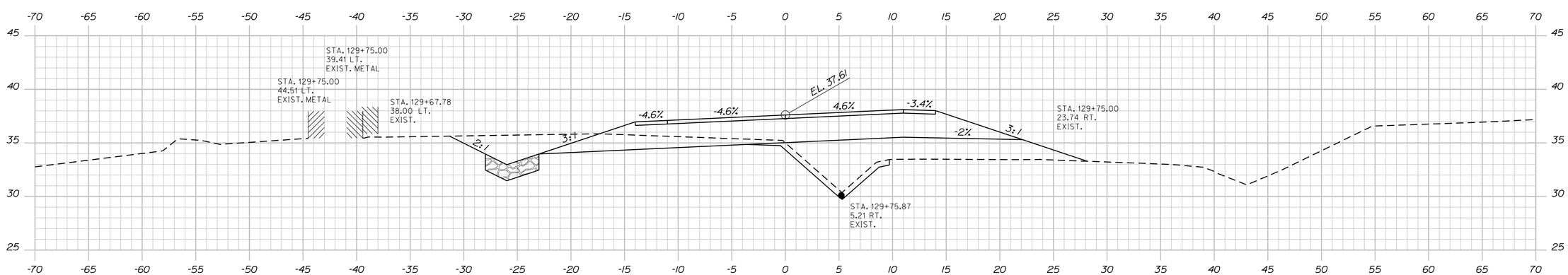

129+75.00

STATE OF MAINE
DEPARTMENT OF TRANSPORTATION

AC-BH-1267(400)

PIN 12674.00

BRIDGE NO. 2506

BRIDGE PLANS

PROJ. MANAGER	N. Benoit	BY	DATE
DESIGN-DETAILED	Team South	DMD/DMS	May 2012
CHECKED-REVIEWED	------	------	------
DESIGN2-DETAILED2	------	------	------
DESIGN3-DETAILED3	------	------	------
REVISIONS 1	------	------	------
REVISIONS 2	------	------	------
REVISIONS 3	------	------	------
REVISIONS 4	------	------	------
FIELD CHANGES	------	------	------

SIGNATURE

P.E. NUMBER

DATE

MAINE KENNEBEC BRIDGE
KENNEBEC RIVER
RICHMOND, SAGADAHOC CTY. DRESDEN, LINCOLN CTY.

CROSS SECTIONS: RTE. 197 (DRESDEN)

SHEET NUMBER

61

OF 238

Sta. 129+75.00 to Sta. 130+25.00

Filename: ...\061_Xsect_Route 197_Dresden_129+75_130+25.dgn BRIDGE Date:3/27/2013 Username: dana.damren

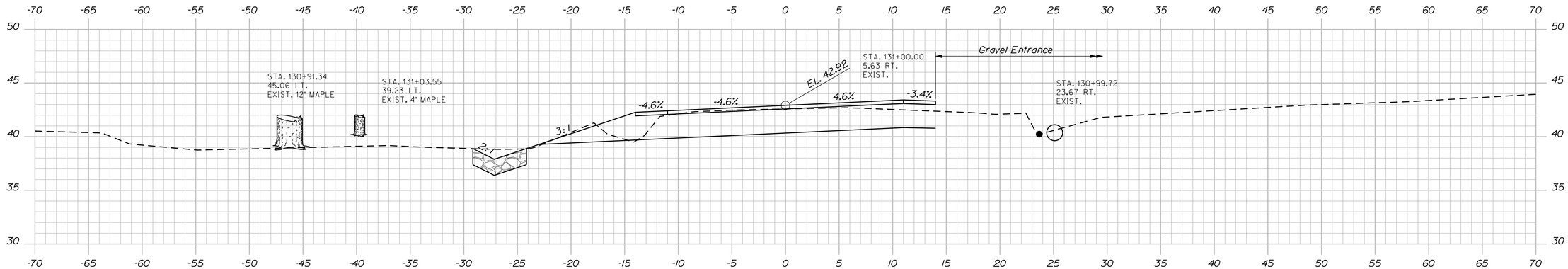

131+00.00

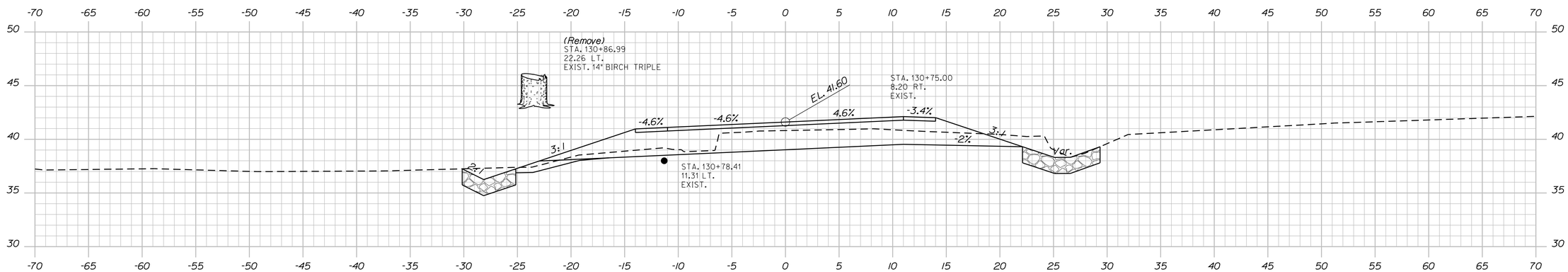

130+75.00

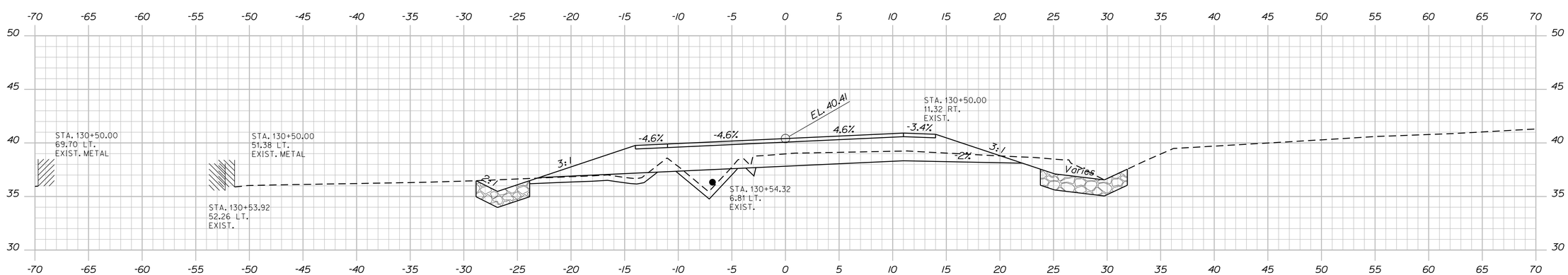

130+50.00

STATE OF MAINE
DEPARTMENT OF TRANSPORTATION

AC-BH-1267(400)

PIN 12674.00

BRIDGE NO. 2506

BRIDGE PLANS

PROJ. MANAGER	N. Benoit	BY	DATE
DESIGN-DETAILED	Team South	DMD/DMS	May 2012
CHECKED-REVIEWED	------	------	------
DESIGN2-DETAILED2	------	------	------
DESIGN3-DETAILED3	------	------	------
REVISIONS 1	------	------	------
REVISIONS 2	------	------	------
REVISIONS 3	------	------	------
REVISIONS 4	------	------	------
FIELD CHANGES	------	------	------

SIGNATURE

P.E. NUMBER

DATE

MAINE KENNEBEC BRIDGE
KENNEBEC RIVER
RICHMOND, SAGADAHOC CTY. DRESDEN, LINCOLN CTY.

CROSS SECTIONS: RTE. 197 (DRESDEN)

SHEET NUMBER

62

OF 238

Sta. 130+50.00 to Sta. 131+00.00

Filename: ...\062_Xsect_Route 197_Dresden_130+50_BRIDGE Username: dana.damren Date:3/27/2013

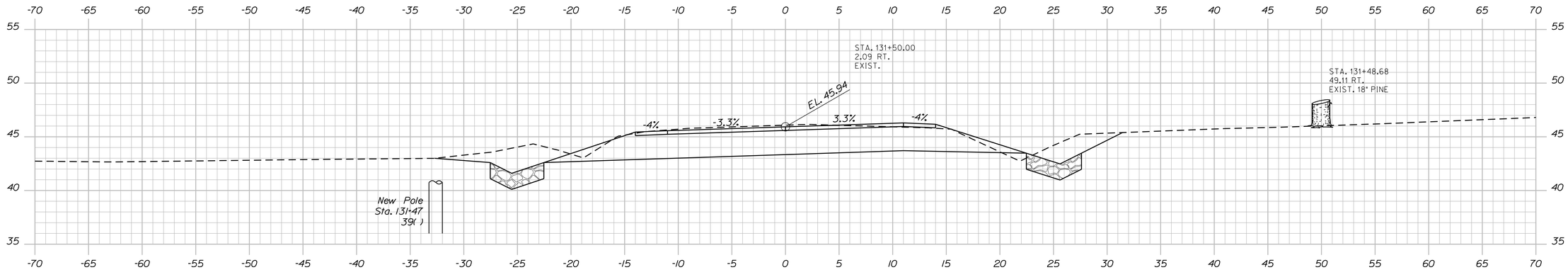

131+50.00

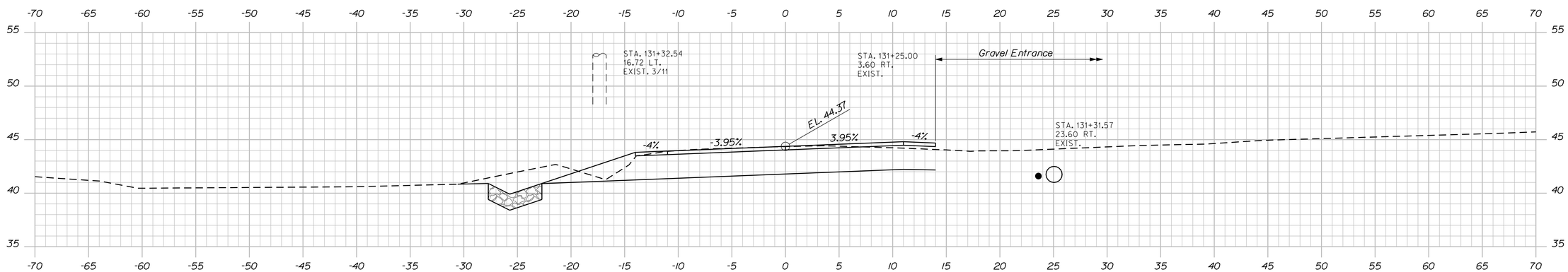

131+25.00

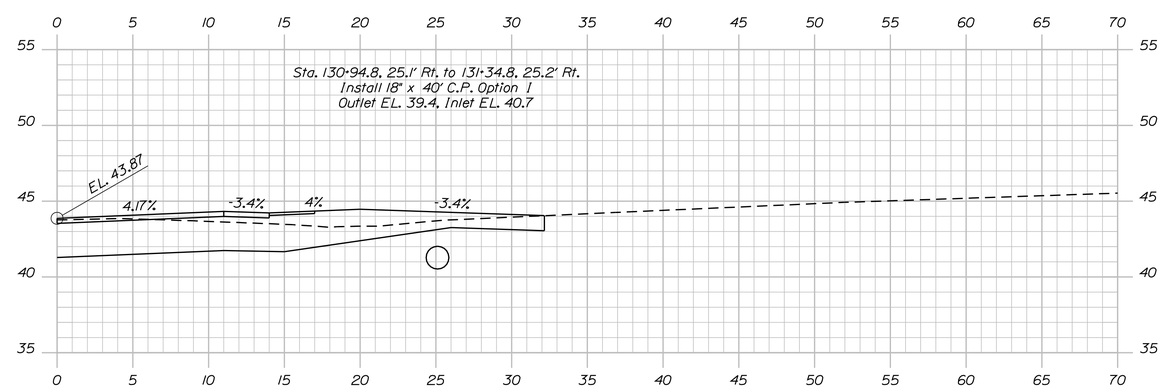

131+16.7 Gravel Entrance

STATE OF MAINE
DEPARTMENT OF TRANSPORTATION

AC-BH-1267(400)

PIN 12674.00

BRIDGE NO. 2506

BRIDGE PLANS

PROJ. MANAGER	N. Benoit	BY	DATE
DESIGN-DETAILED	Team South	DMD/DMS	May 2012
CHECKED-REVIEWED	------	------	------
DESIGN2-DETAILED2	------	------	------
DESIGN3-DETAILED3	------	------	------
REVISIONS 1	------	------	------
REVISIONS 2	------	------	------
REVISIONS 3	------	------	------
REVISIONS 4	------	------	------
FIELD CHANGES	------	------	------

SIGNATURE

P.E. NUMBER

DATE

MAINE KENNEBEC BRIDGE
KENNEBEC RIVER
RICHMOND, SAGADAHOC CTY. DRESDEN, LINCOLN CTY.

CROSS SECTIONS: RTE. 197 (DRESDEN)

SHEET NUMBER

63

OF 238

Sta. 131+17.00 to Sta. 131+50.00

Filename: ...\063_Xsect_Route 197_Dresden_131+17.00 to 131+50.00 BRIDGE Date:3/27/2013 Username: dana.damren

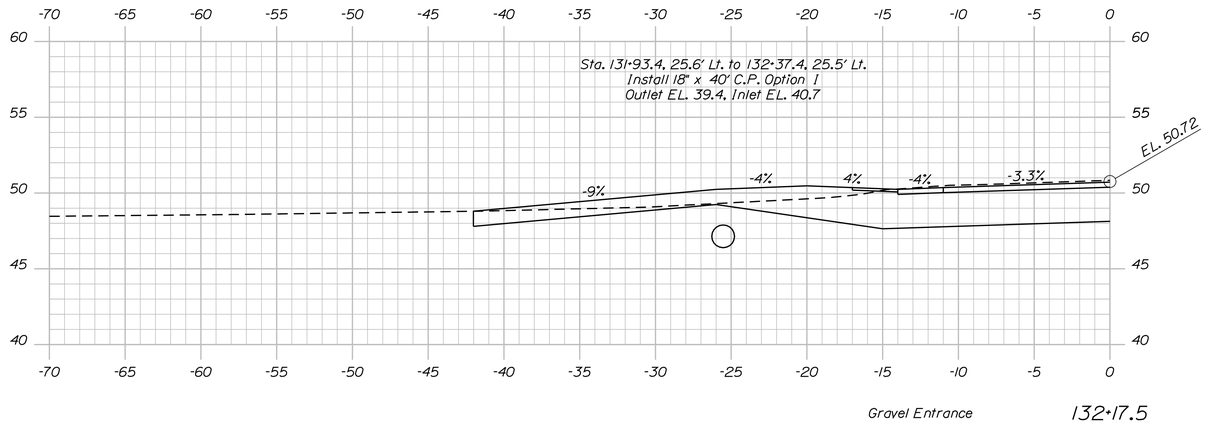

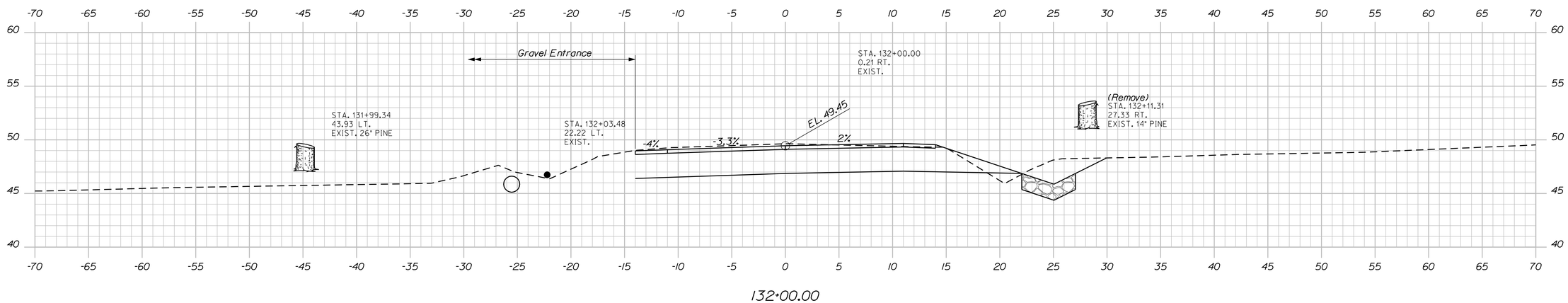

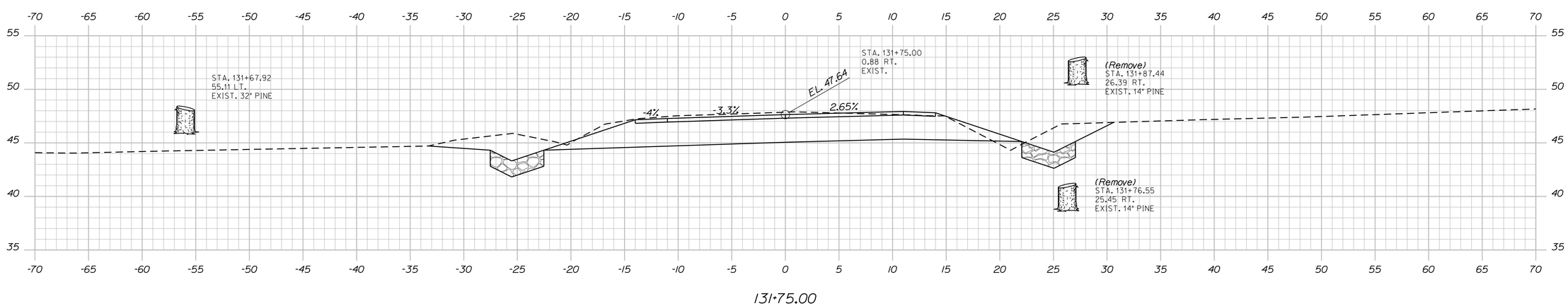

STATE OF MAINE
DEPARTMENT OF TRANSPORTATION

AC-BH-1267(400)

PIN 12674.00

BRIDGE NO. 2506

BRIDGE PLANS

PROJ. MANAGER	N. Benoit	BY	DATE
DESIGN-DETAILED	Team South	DMD/DMS	May 2012
CHECKED-REVIEWED	------	------	------
DESIGN2-DETAILED2	------	------	------
DESIGN3-DETAILED3	------	------	------
REVISIONS 1	------	------	------
REVISIONS 2	------	------	------
REVISIONS 3	------	------	------
REVISIONS 4	------	------	------
FIELD CHANGES	------	------	------

SIGNATURE

P.E. NUMBER

DATE

MAINE KENNEBEC BRIDGE
KENNEBEC RIVER
RICHMOND, SAGADAHOC CTY. DRESDEN, LINCOLN CTY.

CROSS SECTIONS: RTE. 197 (DRESDEN)

SHEET NUMBER

64

OF 238

Sta. 131+75.00 to Sta. 132+18.00

Filename: ...\064_Xsect_Route 197_Dresden_131+75_132+18.dgn Date:3/27/2013 Username: dana.damren

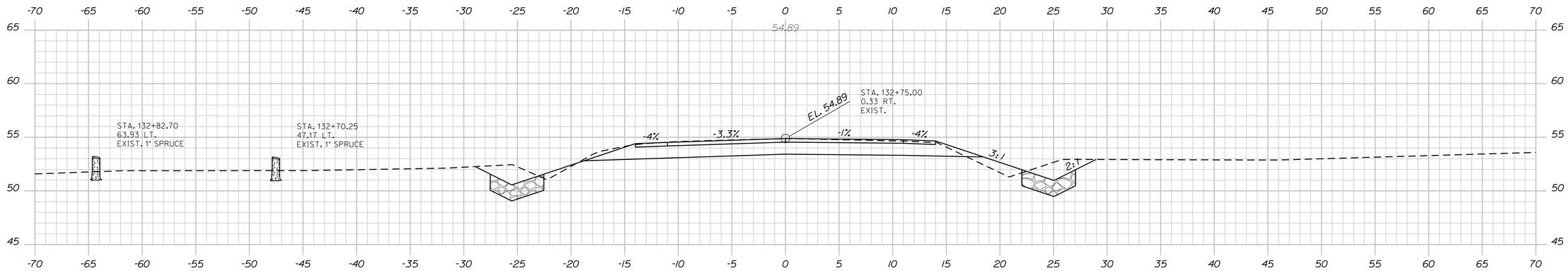

132+75.00

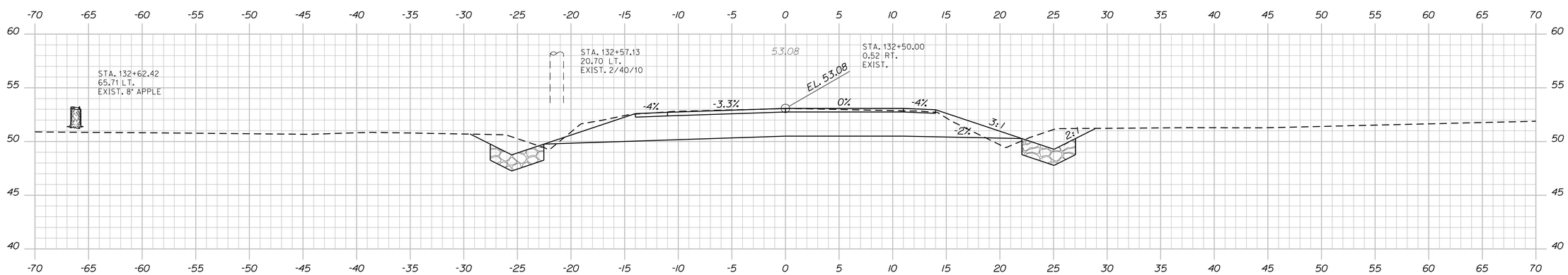

End Project 132+50.00 Begin Transition

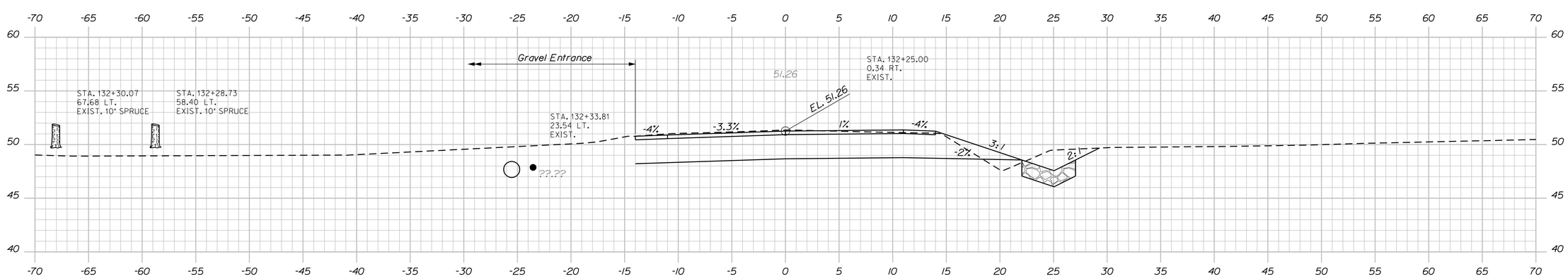

132+25.00

STATE OF MAINE
DEPARTMENT OF TRANSPORTATION

AC-BH-1267(400)

PIN 12674.00

BRIDGE NO. 2506

BRIDGE PLANS

PROJ. MANAGER	N. Benoit	BY	DATE
DESIGN-DETAILED	Team South	DMD/DMS	May 2012
CHECKED-REVIEWED	------	------	------
DESIGN2-DETAILED2	------	------	------
DESIGN3-DETAILED3	------	------	------
REVISIONS 1	------	------	------
REVISIONS 2	------	------	------
REVISIONS 3	------	------	------
REVISIONS 4	------	------	------
FIELD CHANGES	------	------	------

SIGNATURE

P.E. NUMBER

DATE

MAINE KENNEBEC BRIDGE
KENNEBEC RIVER
RICHMOND, SAGADAHOC CTY. DRESDEN, LINCOLN CTY.

CROSS SECTIONS: RTE. 197 (DRESDEN)

SHEET NUMBER

65

OF 238

Sta. 132+25.00 to Sta. 132+75.00

Filename: ...\065_Xsect_Route 197_Dresden_132+25 to 132+75.dgn Date:3/27/2013 Username: dana.damren

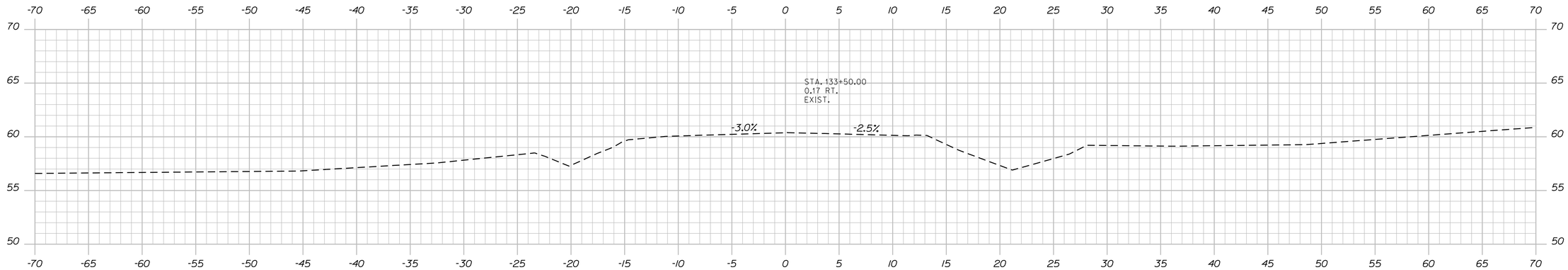

133+50.00

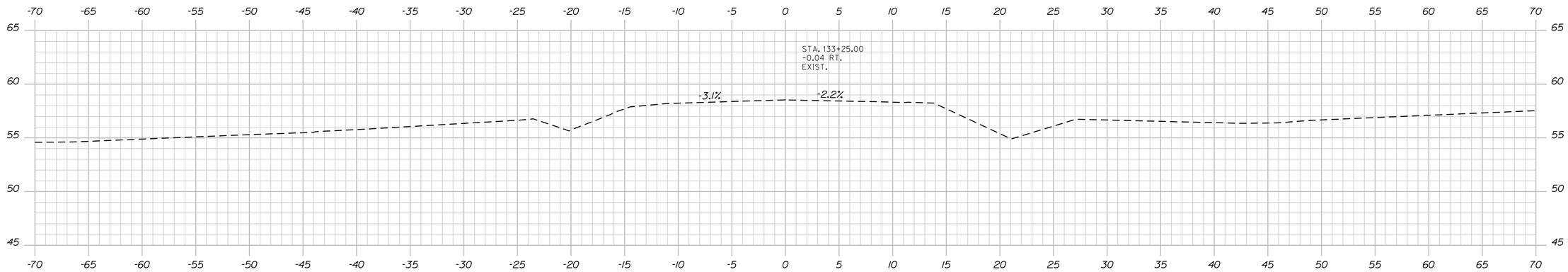

133+25.00

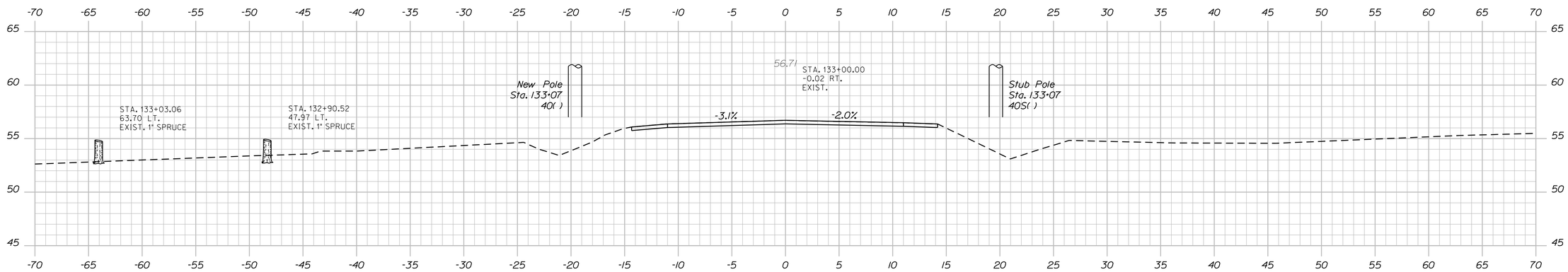

End Transition 133+00.00 Match Existing Roadway

STATE OF MAINE
DEPARTMENT OF TRANSPORTATION

AC-BH-1267(400)

PIN 12674.00

BRIDGE NO. 2506

BRIDGE PLANS

PROJ. MANAGER	N. Benoit	BY	DATE
DESIGN-DETAILED	Team South	DMD/DMS	May 2012
CHECKED-REVIEWED	------	------	------
DESIGN2-DETAILED2	------	------	------
DESIGN3-DETAILED3	------	------	------
REVISIONS 1	------	------	------
REVISIONS 2	------	------	------
REVISIONS 3	------	------	------
REVISIONS 4	------	------	------
FIELD CHANGES	------	------	------

SIGNATURE

P.E. NUMBER

DATE

MAINE KENNEBEC BRIDGE
KENNEBEC RIVER
RICHMOND, SAGADAHOC CTY. DRESDEN, LINCOLN CTY.

CROSS SECTIONS: RTE. 197 (DRESDEN)

SHEET NUMBER
66
OF 238

Filename: ...\066_Xsect_Route 197_Dresden_133+00.dgn Username: dana.damren Date:3/27/2013

Sta. 133+00.00 to Sta. 133+50.00

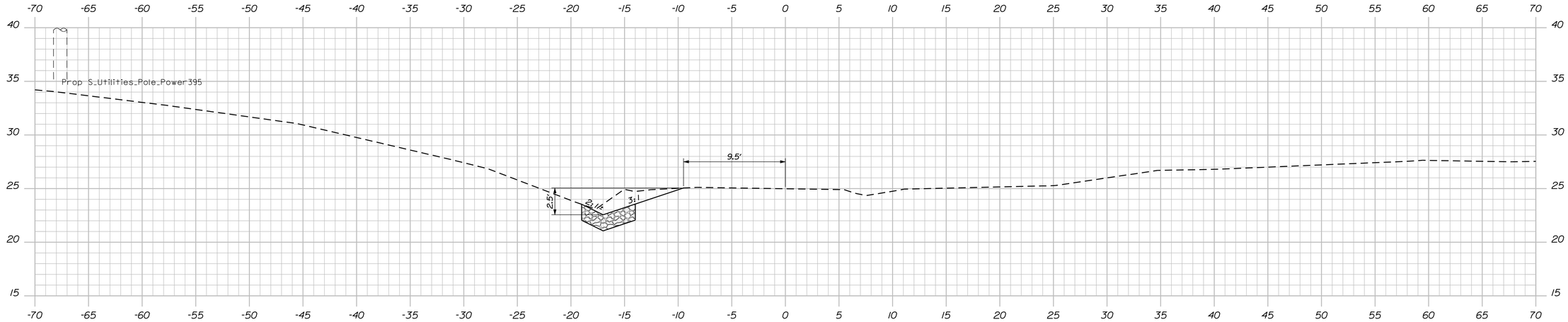

7+00.00

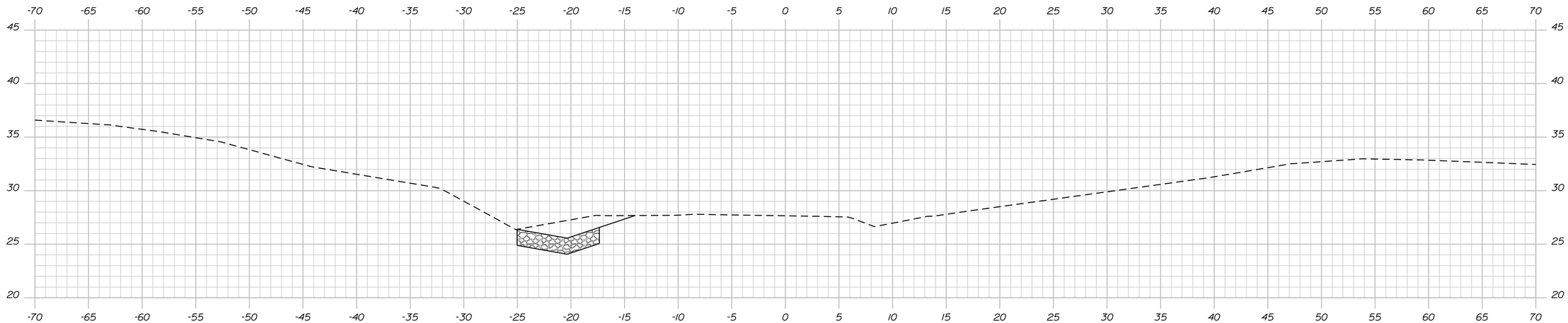

6+75.00

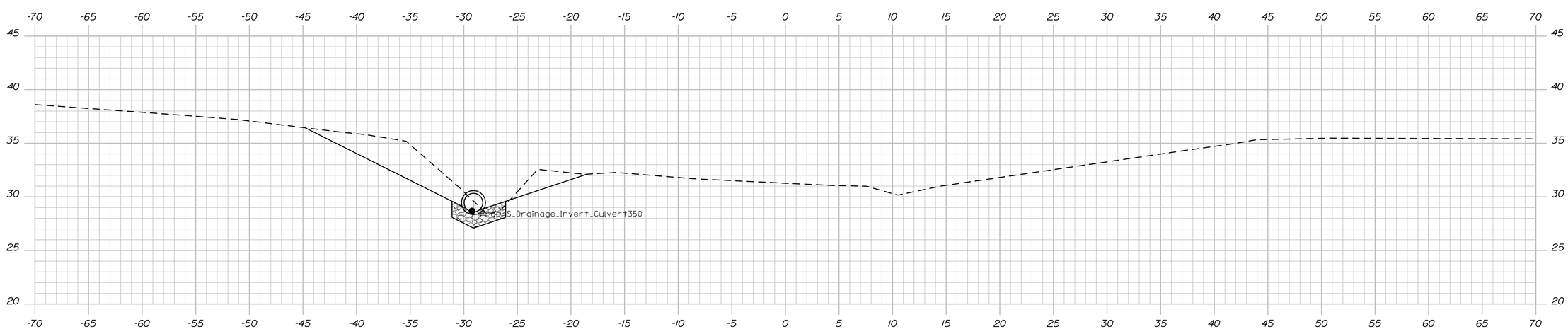

6+50.00

STATE OF MAINE
DEPARTMENT OF TRANSPORTATION

AC-BH-1267(400)

WIN 12674.00

BRIDGE NO. 2506

BRIDGE PLANS

PROJ. MANAGER	N. Benoit	BY	DATE
DESIGN-DETAILED	D. Damren	D. Damren	Feb. 2013
CHECKED-REVIEWED	------	------	------
DESIGN2-DETAILED2	------	------	------
DESIGN3-DETAILED3	------	------	------
REVISIONS 1	------	------	------
REVISIONS 2	------	------	------
REVISIONS 3	------	------	------
REVISIONS 4	------	------	------
FIELD CHANGES	------	------	------

SIGNATURE

P.E. NUMBER

DATE

MAINE KENNEBEC BRIDGE
KENNEBEC RIVER
RICHMOND, SAGADAHOC CTY. DRESDEN, LINCOLN CTY.

CROSS SECTIONS: ENT. AT STA. 106+00

SHEET NUMBER

67

OF 238

Sta. 6+50.00 to Sta. 7+00.00

Filename: ...\067_Xsect_Entrance 106+00_6+50_00.dgn Division: BRIDGE Username: dana.damren Date:3/27/2013

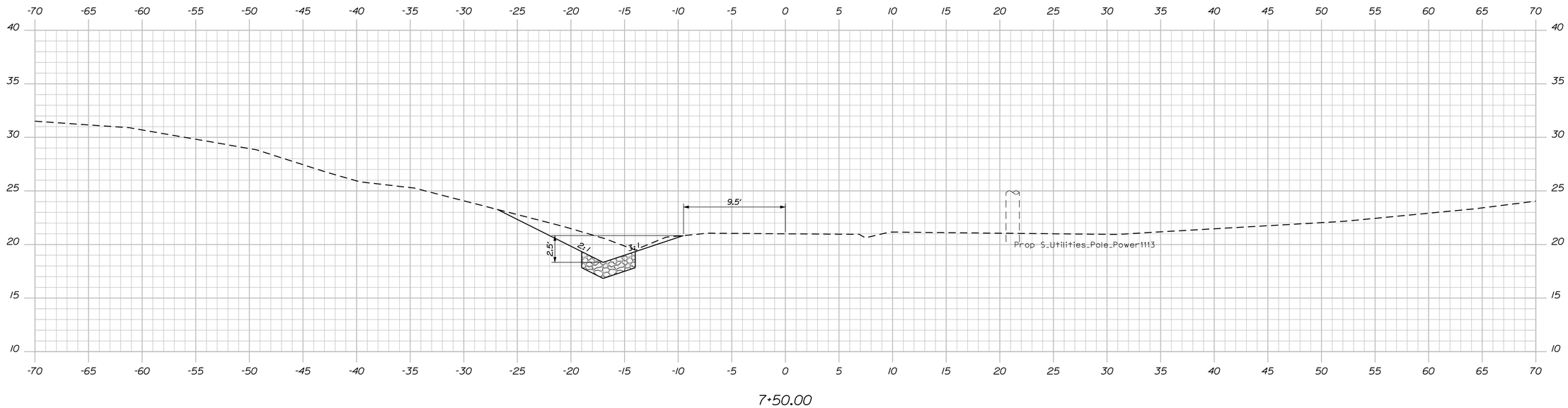

7+50.00

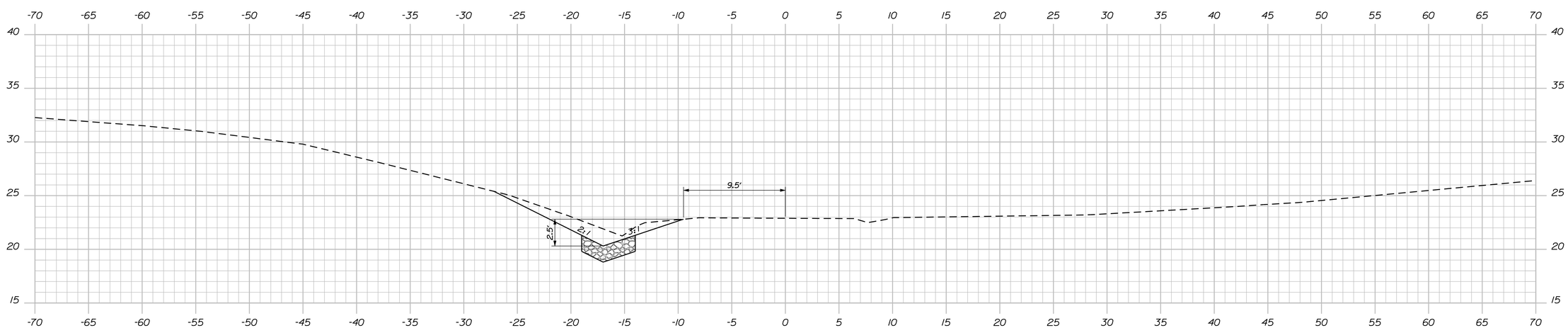

7+25.00

STATE OF MAINE
DEPARTMENT OF TRANSPORTATION

AC-BH-1267(400)

WIN 12674.00

BRIDGE NO. 2506

BRIDGE PLANS

PROJ. MANAGER	N. Benoit	BY	DATE
DESIGN-DETAILED	D. Damren	D. Damren	Feb. 2013
CHECKED-REVIEWED	------	------	------
DESIGN2-DETAILED2	------	------	------
DESIGN3-DETAILED3	------	------	------
REVISIONS 1	------		------
REVISIONS 2	------		------
REVISIONS 3	------		------
REVISIONS 4	------		------
FIELD CHANGES	------		------

SIGNATURE

P.E. NUMBER

DATE

MAINE KENNEBEC BRIDGE
KENNEBEC RIVER
RICHMOND, SAGADAHOC CTY. DRESDEN, LINCOLN CTY.

CROSS SECTIONS: ENT. AT STA. 106+00

SHEET NUMBER

68

OF 238

Sta. 7+25.00 to Sta. 7+50.00

Filename: ...\068_Xsect_Entrance 106+00_7+25_002.dgn Design: BRIDGE Date:3/27/2013 Username: dana.damren

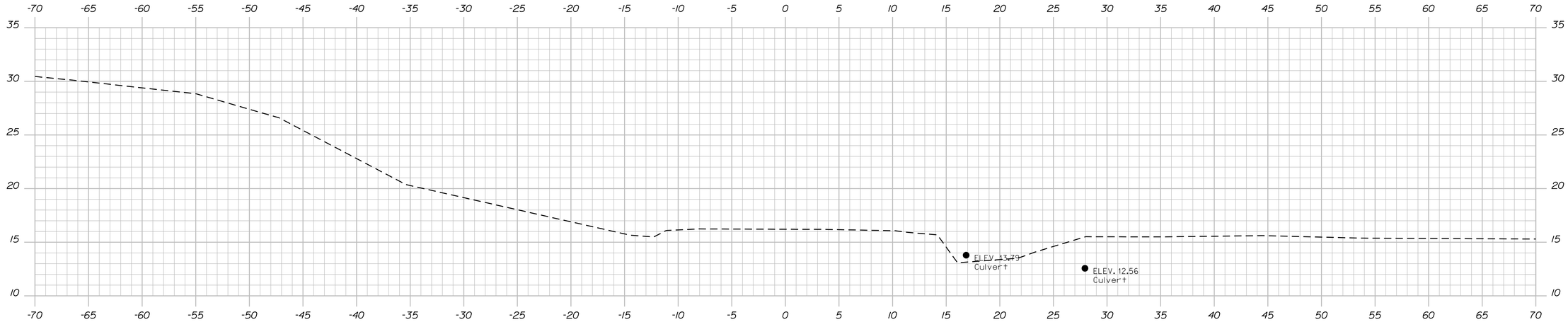

8+25.00

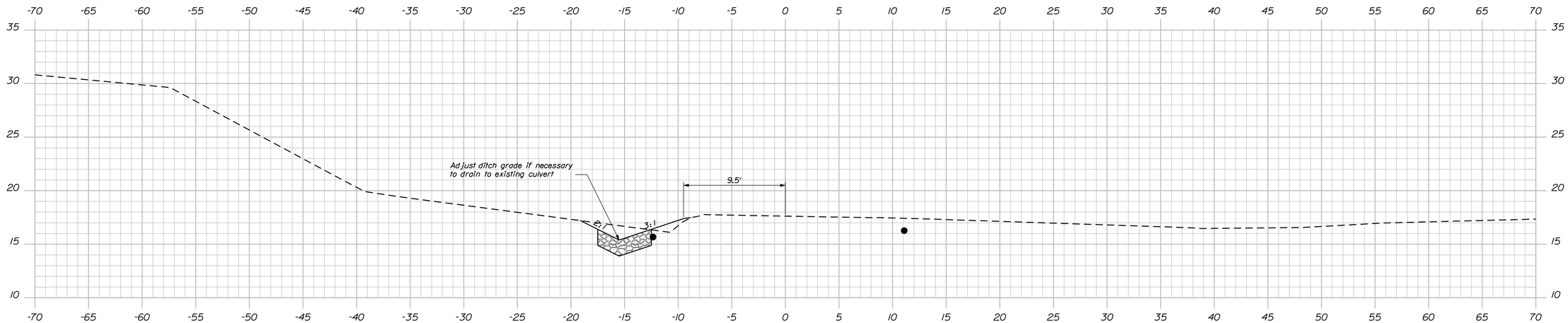

8+00.00

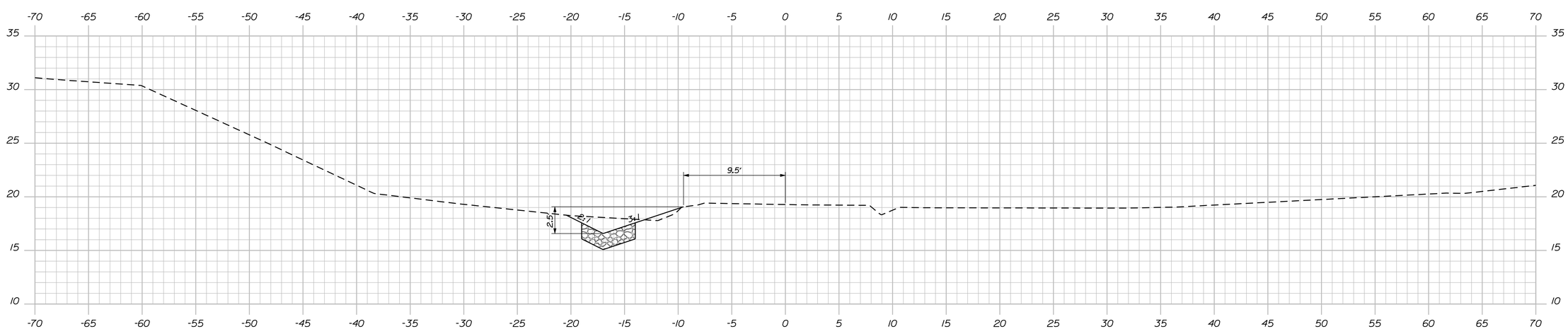

7+75.00

STATE OF MAINE
DEPARTMENT OF TRANSPORTATION

AC-BH-1267(400)

WIN 12674.00

BRIDGE NO. 2506

BRIDGE PLANS

PROJ. MANAGER	N. Benoit	BY	DATE
DESIGN-DETAILED	D. Damren	D. Damren	Feb. 2013
CHECKED-REVIEWED	------	------	------
DESIGN2-DETAILED2	------	------	------
DESIGN3-DETAILED3	------	------	------
REVISIONS 1	------		------
REVISIONS 2	------		------
REVISIONS 3	------		------
REVISIONS 4	------		------
FIELD CHANGES	------		------

SIGNATURE

P.E. NUMBER

DATE

MAINE KENNEBEC BRIDGE
KENNEBEC RIVER
RICHMOND, SAGADAHOC CTY. DRESDEN, LINCOLN CTY.

CROSS SECTIONS: ENT. AT STA. 106+00

SHEET NUMBER

69

OF 238

Sta. 7+75.00 to Sta. 8+00.00

Filename: ...\069_Xsect_Entrance 106+00_7+75_001.dgn Design: BRIDGE Username: dana.damren Date:3/27/2013

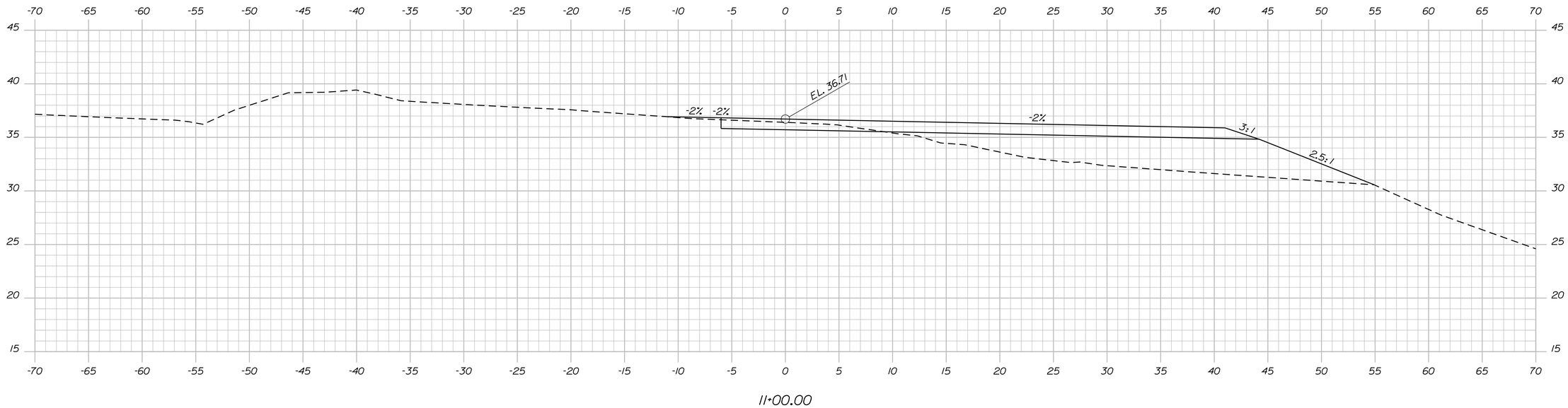

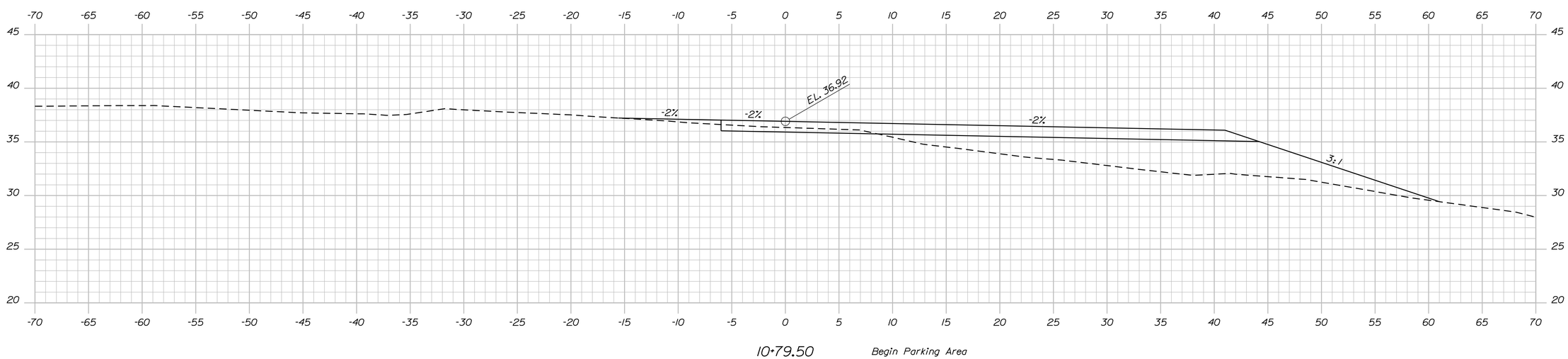

Sta. 10+79.19 to Sta. 11+00.00

STATE OF MAINE
DEPARTMENT OF TRANSPORTATION

AC-BH-1267(400)

WIN 12674.00

BRIDGE NO. 2506

BRIDGE PLANS

PROJ. MANAGER	N. Benoit	BY	DATE
DESIGN-DETAILED	D. Damren	D. Damren	May 2012
CHECKED-REVIEWED	------	------	------
DESIGN2-DETAILED2	------	------	------
DESIGN3-DETAILED3	------	------	------
REVISIONS 1	------	------	------
REVISIONS 2	------	------	------
REVISIONS 3	------	------	------
REVISIONS 4	------	------	------
FIELD CHANGES	------	------	------

SIGNATURE

P.E. NUMBER

DATE

MAINE KENNEBEC BRIDGE
KENNEBEC RIVER
RICHMOND, SAGADAHOC CTY. DRESDEN, LINCOLN CTY.

CROSS SECTIONS: FT. RICHMOND PARK

SHEET NUMBER

70

OF 238

Filename: ...\070_Xsect_Fort Richmond_10+79_0040.dgn Division: BRIDGE Date:3/27/2013 Username: dana.damren

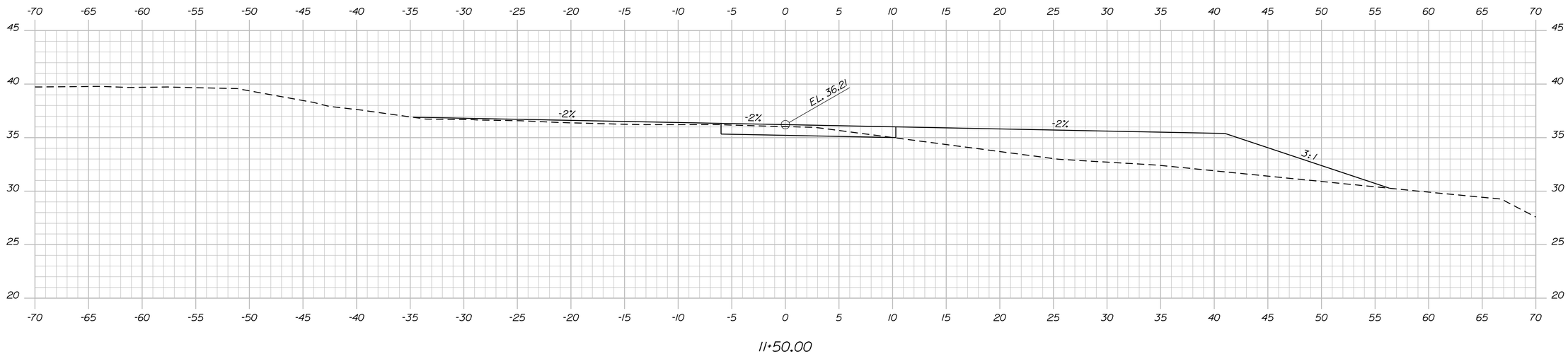

11+50.00

11+45.50 End Parking Area

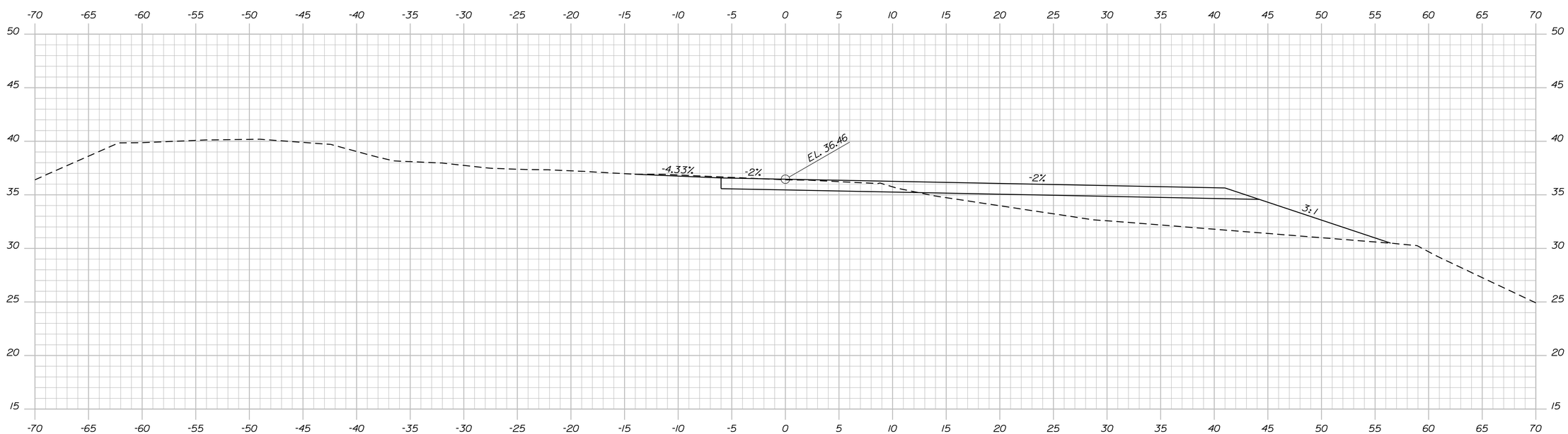

11+25.00

STATE OF MAINE
DEPARTMENT OF TRANSPORTATION

AC-BH-1267(400)

WIN 12674.00

BRIDGE NO. 2506

BRIDGE PLANS

PROJ. MANAGER	N. Benoit	BY	DATE
DESIGN-DETAILED	D. Damren	D. Damren	May 2012
CHECKED-REVIEWED	------	------	------
DESIGN2-DETAILED2	------	------	------
DESIGN3-DETAILED3	------	------	------
REVISIONS 1	------	------	------
REVISIONS 2	------	------	------
REVISIONS 3	------	------	------
REVISIONS 4	------	------	------
FIELD CHANGES	------	------	------

SIGNATURE

P.E. NUMBER

DATE

MAINE KENNEBEC BRIDGE
KENNEBEC RIVER
RICHMOND, SAGADAHOC CTY. DRESDEN, LINCOLN CTY.

CROSS SECTIONS: FT. RICHMOND PARK

SHEET NUMBER

71

OF 238

Sta. 11+25.00 to Sta. 11+50.00

Filename: ...\071_Xsect_Fort Richmond_11+25_005.dgn Division: BRIDGE Username: dana.damren Date:3/27/2013

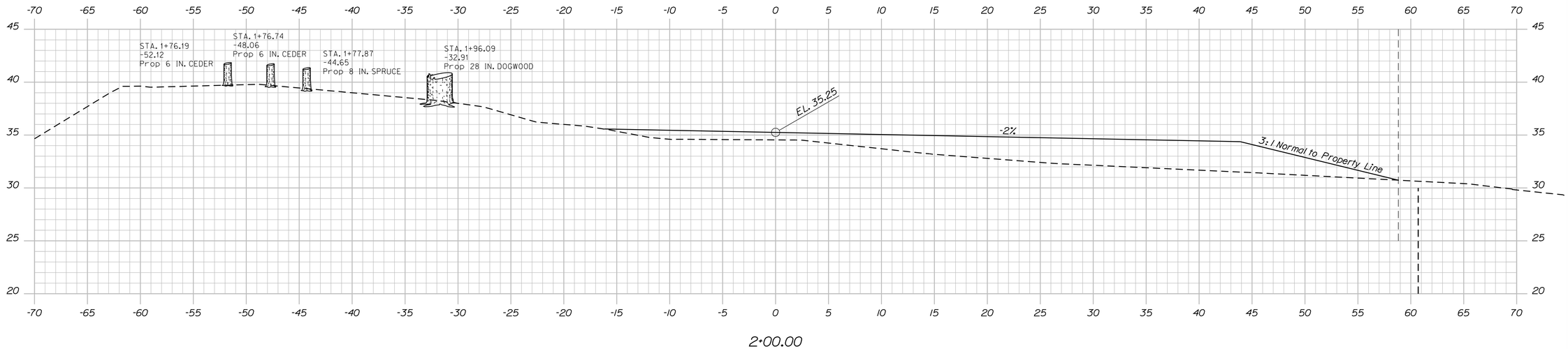

2+00.00

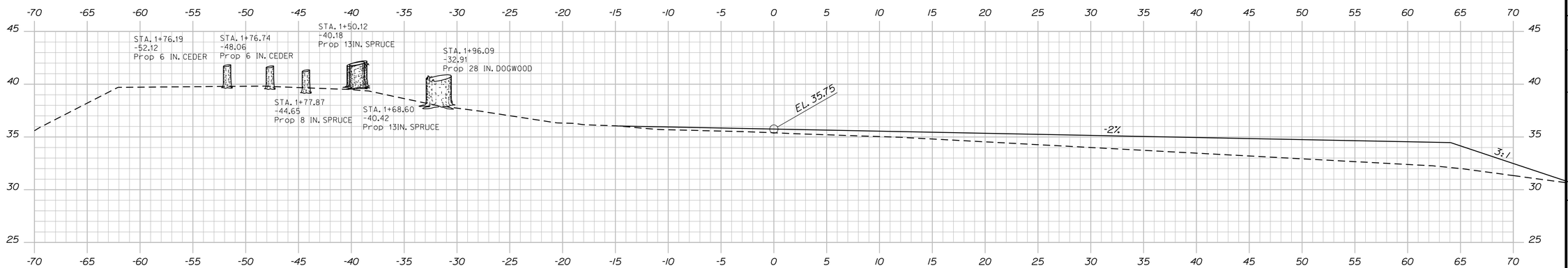

1+75.00

STATE OF MAINE
DEPARTMENT OF TRANSPORTATION

AC-BH-1267(400)

WIN 12674.00

BRIDGE NO. 2506

BRIDGE PLANS

PROJ. MANAGER	N. Benoit	BY	DATE
DESIGN-DETAILED	D. Damren	D. Damren	May 2012
CHECKED-REVIEWED	------	------	------
DESIGN2-DETAILED2	------	------	------
DESIGN3-DETAILED3	------	------	------
REVISIONS 1	------	------	------
REVISIONS 2	------	------	------
REVISIONS 3	------	------	------
REVISIONS 4	------	------	------
FIELD CHANGES	------	------	------

SIGNATURE

P.E. NUMBER

DATE

MAINE KENNEBEC BRIDGE
KENNEBEC RIVER
RICHMOND, SAGADAHOC CTY. DRESDEN, LINCOLN CTY.

CROSS SECTIONS: FT. RICHMOND PARK

SHEET NUMBER

72

OF 238

Sta. 1+50.00 to Sta. 2+00.00

Filename: ...\072_Xsect_Fort Richmond_1+50_001.dgn Division: BRIDGE Username: dana.damren Date:3/27/2013

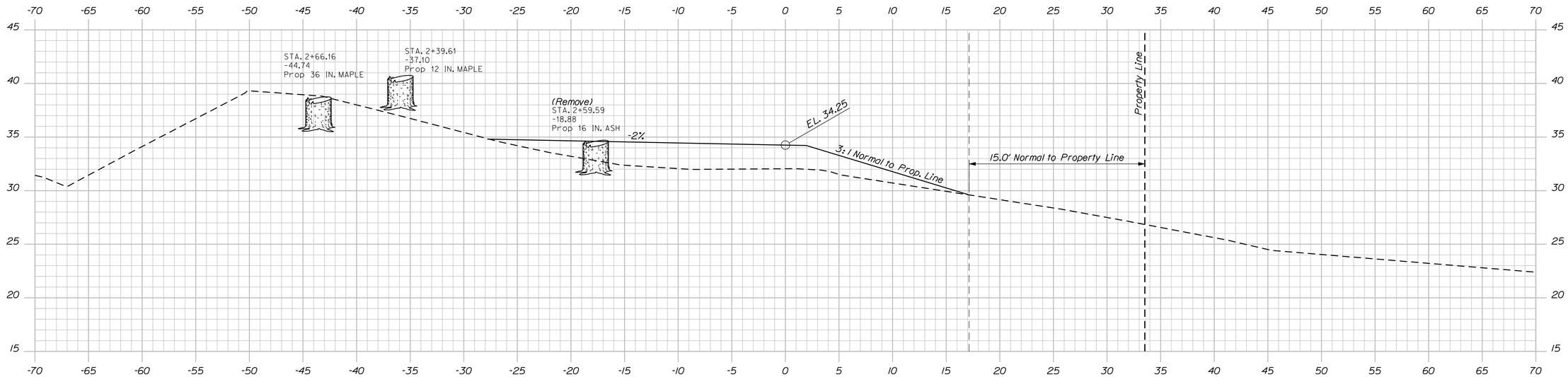

2+50.00

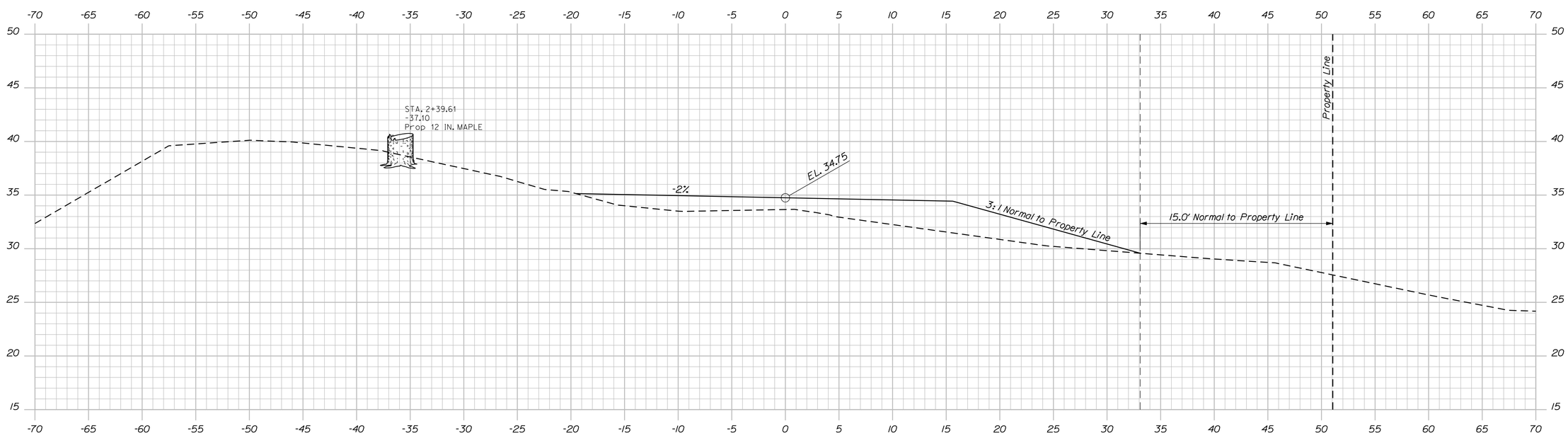

2+25.00

STATE OF MAINE
DEPARTMENT OF TRANSPORTATION

AC-BH-1267(400)

WIN 12674.00

BRIDGE NO. 2506

BRIDGE PLANS

	BY	DATE
PROJ. MANAGER	N. Benoit	
DESIGN-DETAILED	D. Damren	May 2012
CHECKED-REVIEWED	------	------
DESIGN2-DETAILED2	------	------
DESIGN3-DETAILED3	------	------
REVISIONS 1	------	------
REVISIONS 2	------	------
REVISIONS 3	------	------
REVISIONS 4	------	------
FIELD CHANGES	------	------

SIGNATURE

P.E. NUMBER

DATE

MAINE KENNEBEC BRIDGE
KENNEBEC RIVER
RICHMOND, SAGADAHOC CTY. DRESDEN, LINCOLN CTY.

CROSS SECTIONS: FT. RICHMOND PARK

SHEET NUMBER

73

OF 238

Sta. 2+25.00 to Sta. 2+50.00

Filename: ...\073_Xsect_Fort Richmond_2+25_002.dgn Division: BRIDGE Username: dana.damren Date:3/27/2013

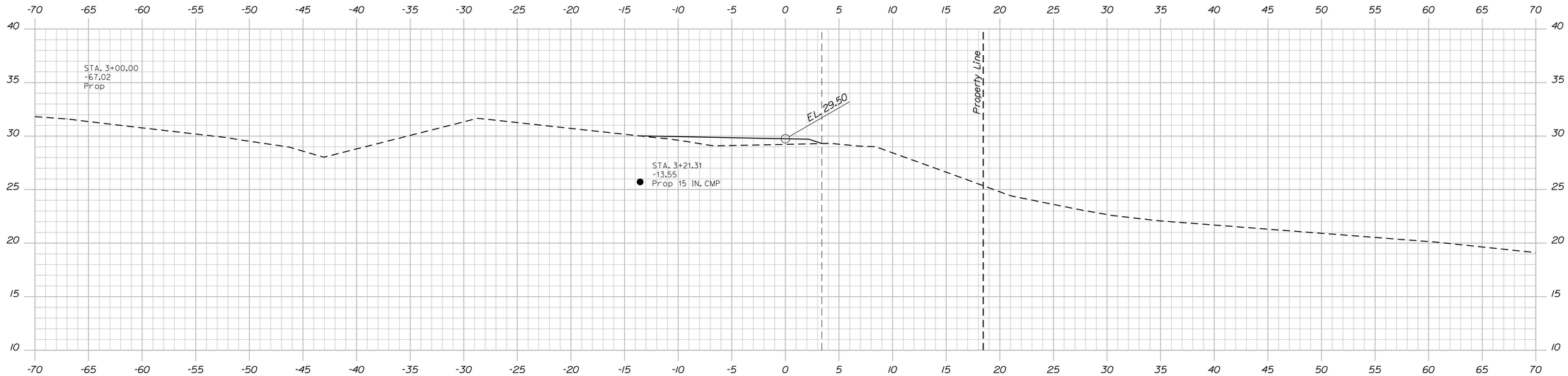

3+00.00

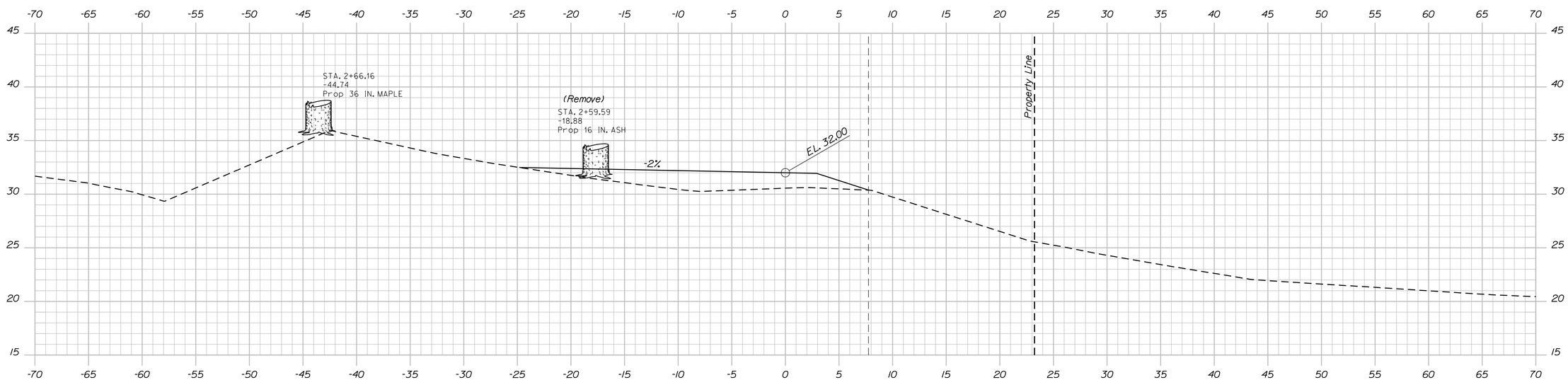

2+75.00

STATE OF MAINE
DEPARTMENT OF TRANSPORTATION

AC-BH-1267(400)

WIN 12674.00

BRIDGE NO. 2506

BRIDGE PLANS

PROJ. MANAGER	N. Benoit			
DESIGN-DETAILED	D. Damren	BY	DATE	
CHECKED-REVIEWED	------	D. Damren	May 2012	SIGNATURE
DESIGN2-DETAILED2	------	------	------	
DESIGN3-DETAILED3	------	------	------	P.E. NUMBER
REVISIONS 1	------	------	------	
REVISIONS 2	------	------	------	
REVISIONS 3	------	------	------	DATE
REVISIONS 4	------	------	------	
FIELD CHANGES	------	------	------	

MAINE KENNEBEC BRIDGE
KENNEBEC RIVER
RICHMOND, SAGADAHOC CTY. DRESDEN, LINCOLN CTY.

CROSS SECTIONS: FT. RICHMOND PARK

SHEET NUMBER

74

OF 238

Sta. 2+75.00 to Sta. 3+00.00

Filename: ...\074_Xsect_Fort Richmond_2+75_003.dgn Division: BRIDGE Username: dana.damren Date:3/27/2013

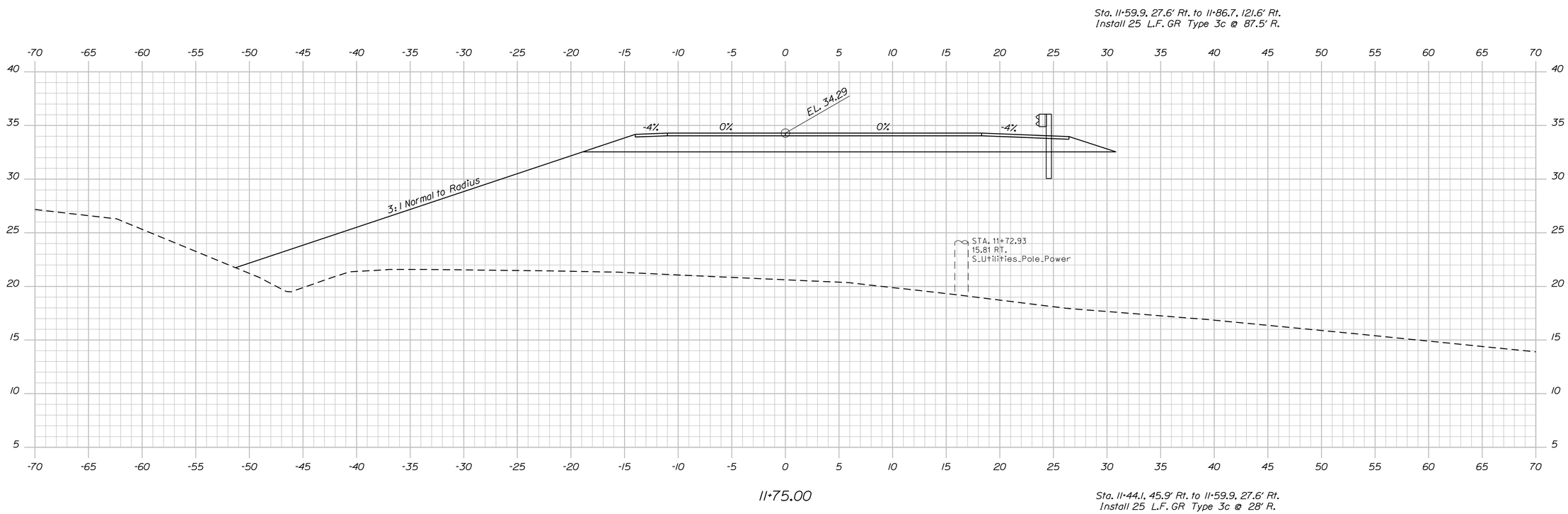

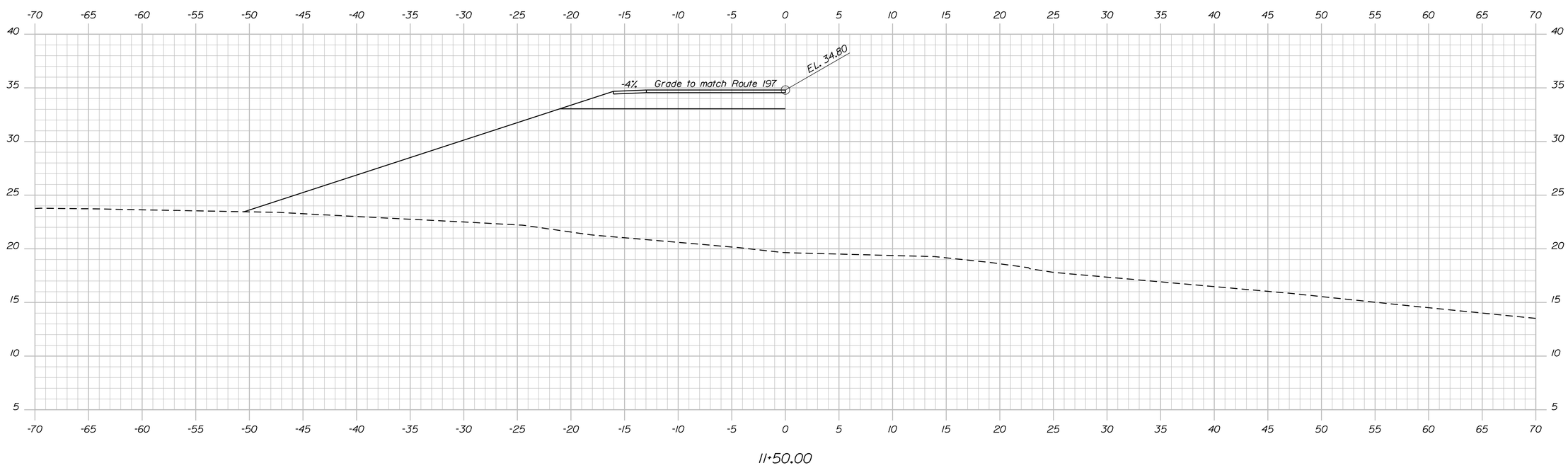

STATE OF MAINE
DEPARTMENT OF TRANSPORTATION

AC-BH-1267(400)

PIN 12674.00

BRIDGE NO. 2506

BRIDGE PLANS

PROJ. MANAGER	N. Benoit	BY	DATE
DESIGN-DETAILED	Team South	DMD/DMS	May 2012
CHECKED-REVIEWED	------	------	------
DESIGN2-DETAILED2	------	------	------
DESIGN3-DETAILED3	------	------	------
REVISIONS 1	------	------	------
REVISIONS 2	------	------	------
REVISIONS 3	------	------	------
REVISIONS 4	------	------	------
FIELD CHANGES	------	------	------

SIGNATURE

P.E. NUMBER

DATE

MAINE KENNEBEC BRIDGE
KENNEBEC RIVER
RICHMOND, SAGADAHOC CTY. DRESDEN, LINCOLN CTY.

CROSS SECTIONS: LINCOLN ROAD

SHEET NUMBER

75

OF 238

Sta. 11+50.00 to Sta. 11+75.00

Filename: ...\075_Xsect_Lincoln Road_11+50_001.dgn Division: BRIDGE Username: dana.damren Date:3/27/2013

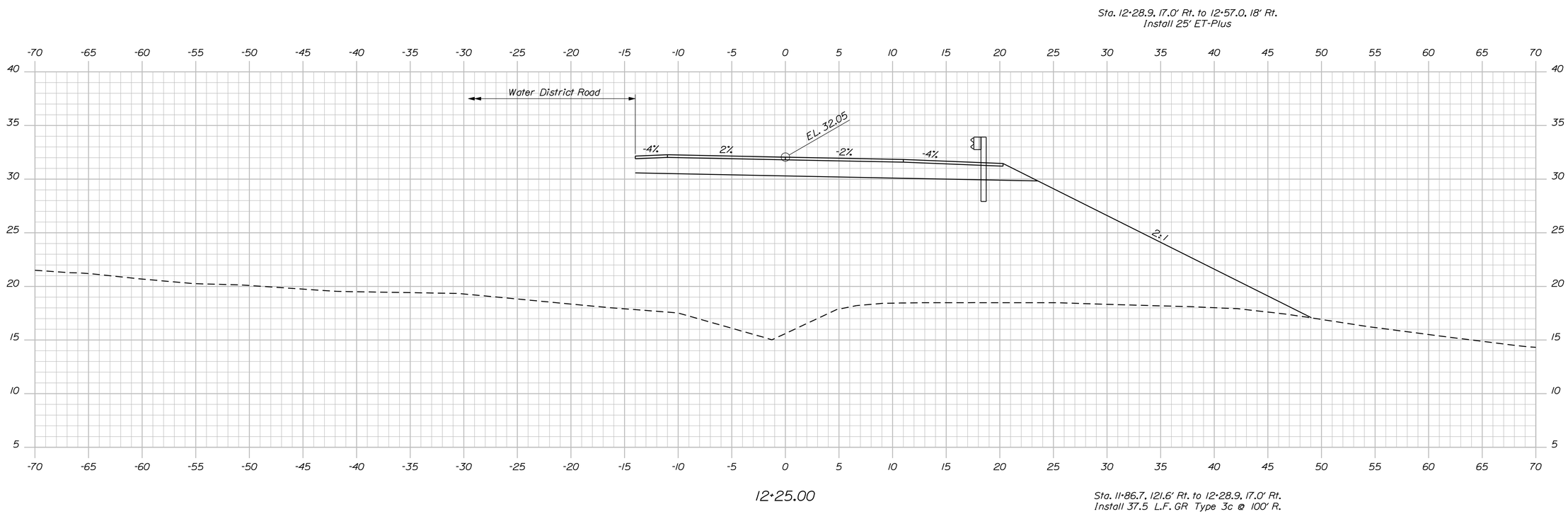

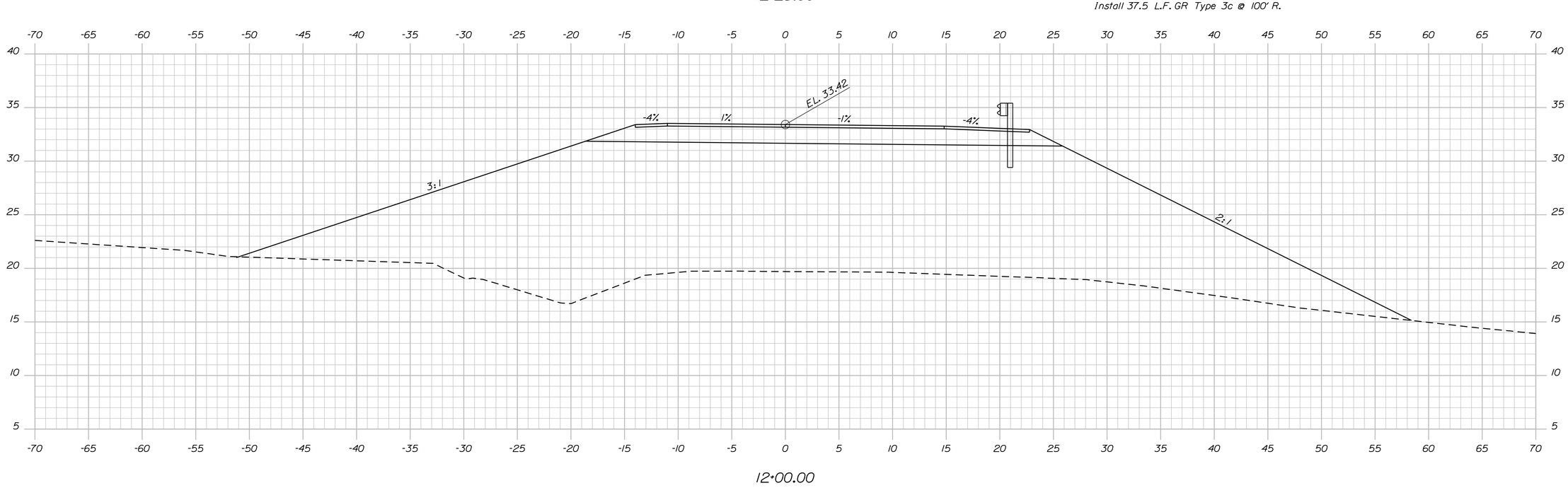

Sta. 12+00.00 to Sta. 12+25.00

STATE OF MAINE
DEPARTMENT OF TRANSPORTATION

AC-BH-1267(400)

PIN 12674.00

BRIDGE NO. 2506

BRIDGE PLANS

PROJ. MANAGER	N. Benoit	BY	DATE
DESIGN-DETAILED	Team South	DMD/DMS	May 2012
CHECKED-REVIEWED	------	------	------
DESIGN2-DETAILED2	------	------	------
DESIGN3-DETAILED3	------	------	------
REVISIONS 1	------	------	------
REVISIONS 2	------	------	------
REVISIONS 3	------	------	------
REVISIONS 4	------	------	------
FIELD CHANGES	------	------	------

SIGNATURE

P.E. NUMBER

DATE

MAINE KENNEBEC BRIDGE
KENNEBEC RIVER
RICHMOND, SAGADAHOC CTY. DRESDEN, LINCOLN CTY.

CROSS SECTIONS: LINCOLN ROAD

SHEET NUMBER

76

OF 238

Filename: ...\076_Xsect_Lincoln Road_12+00_002.dgn Division: BRIDGE Username: dana.damren Date:3/27/2013

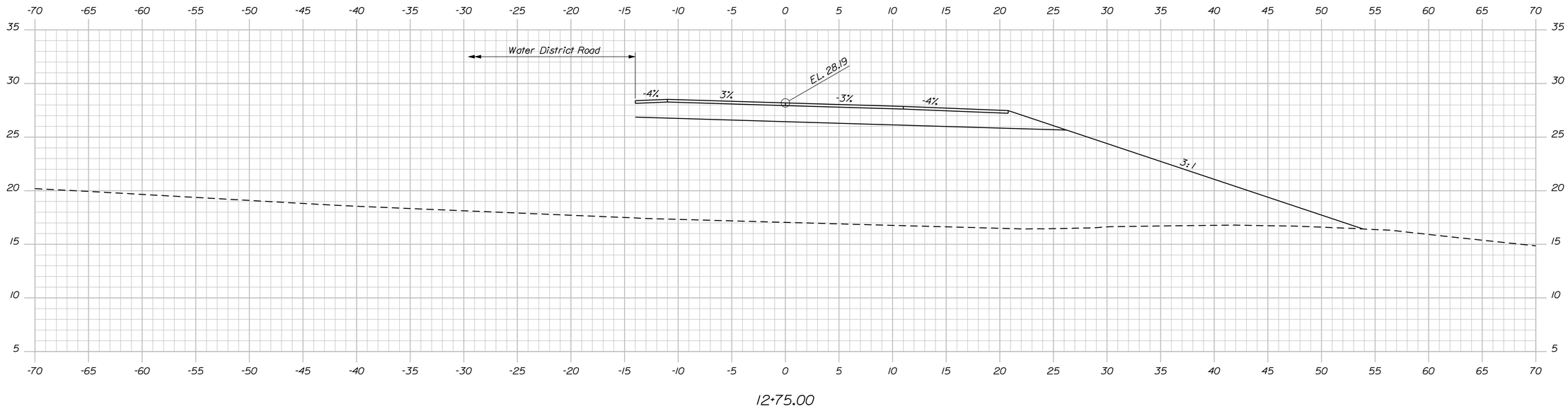

12+75.00

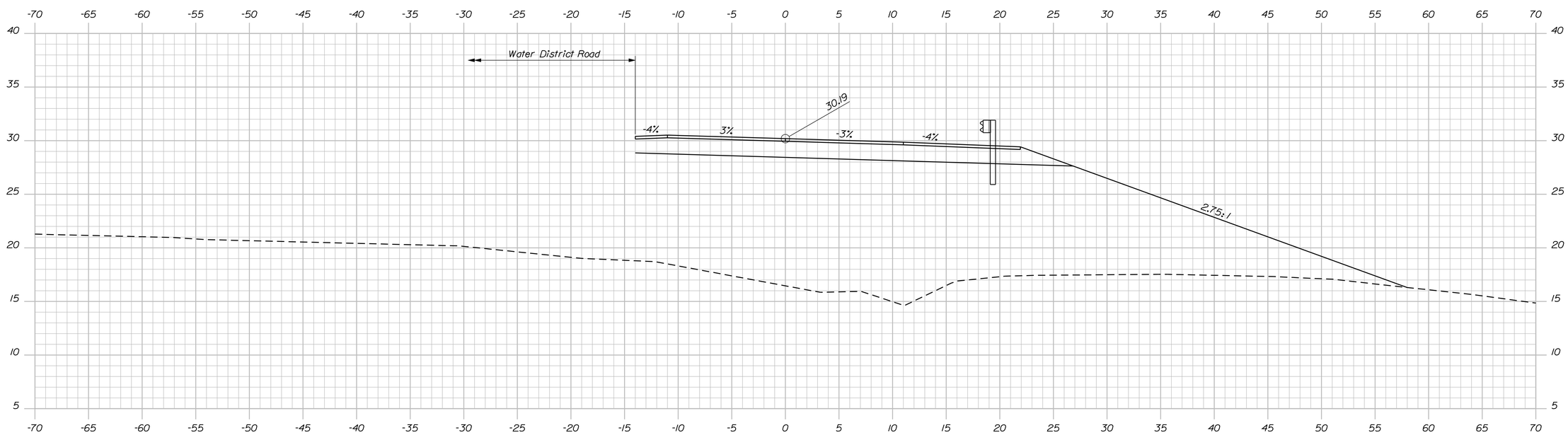

12+50.00

STATE OF MAINE
DEPARTMENT OF TRANSPORTATION

AC-BH-1267(400)

PIN 12674.00

BRIDGE NO. 2506

BRIDGE PLANS

PROJ. MANAGER	N. Benoit	BY	DATE
DESIGN-DETAILED	Team South	DMD/DMS	May 2012
CHECKED-REVIEWED	------	------	------
DESIGN2-DETAILED2	------	------	------
DESIGN3-DETAILED3	------	------	------
REVISIONS 1	------	------	------
REVISIONS 2	------	------	------
REVISIONS 3	------	------	------
REVISIONS 4	------	------	------
FIELD CHANGES	------	------	------

SIGNATURE

P.E. NUMBER

DATE

MAINE KENNEBEC BRIDGE
KENNEBEC RIVER
RICHMOND, SAGADAHOC CTY. DRESDEN, LINCOLN CTY.

CROSS SECTIONS: LINCOLN ROAD

SHEET NUMBER

77

OF 238

Sta. 12+50.00 to Sta. 12+75.00

Filename: ...\077_Xsect_Lincoln Road_12+50_003.dgn Division: BRIDGE Username: dana.damren Date:3/27/2013

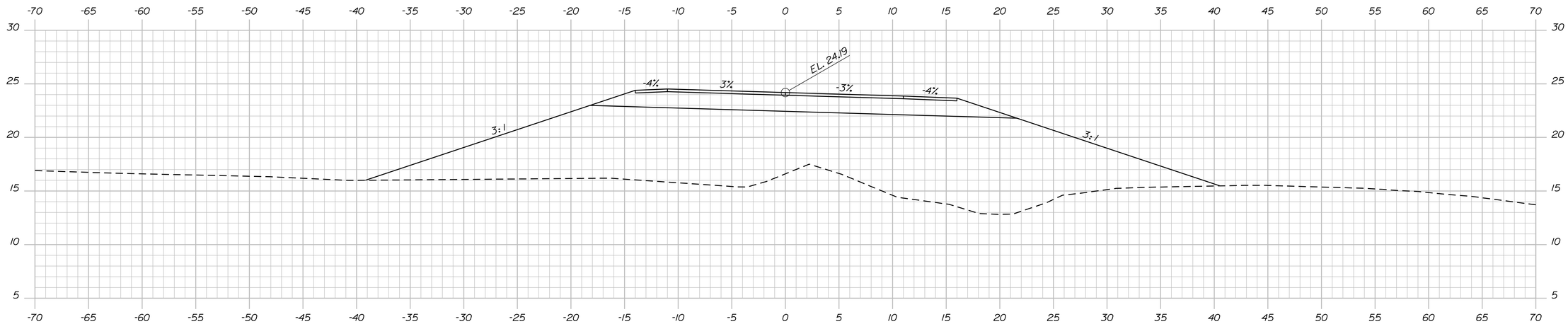

13+25.00

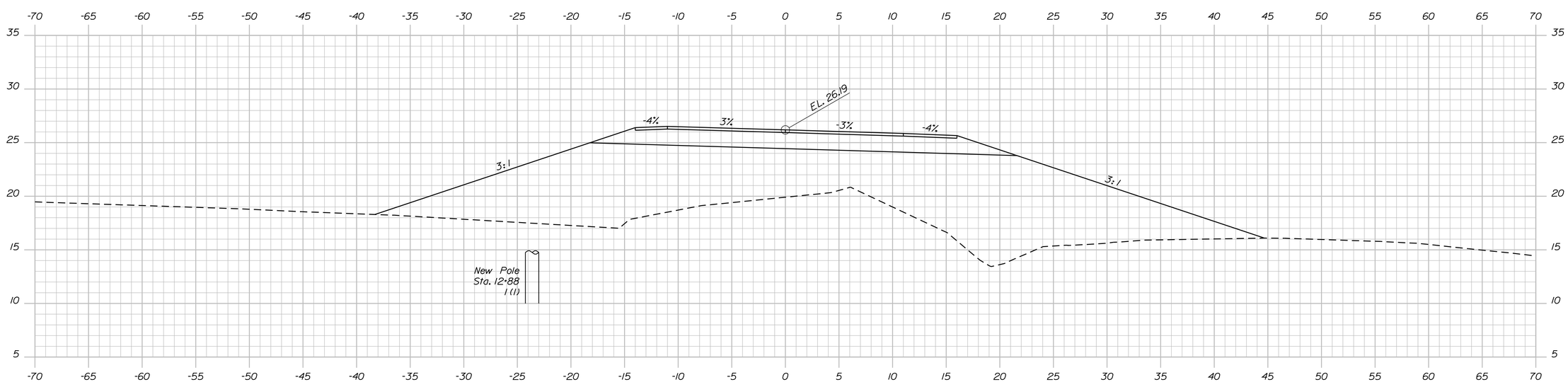

13+00.00

STATE OF MAINE
DEPARTMENT OF TRANSPORTATION

AC-BH-1267(400)

PIN
12674.00

BRIDGE NO. 2506

BRIDGE PLANS

PROJ. MANAGER	N. Benoit	BY	DATE
DESIGN-DETAILED	Team South	DMD/DMS	May 2012
CHECKED-REVIEWED	------	------	------
DESIGN2-DETAILED2	------	------	------
DESIGN3-DETAILED3	------	------	------
REVISIONS 1	------		------
REVISIONS 2	------		------
REVISIONS 3	------		------
REVISIONS 4	------		------
FIELD CHANGES	------		------

SIGNATURE

P.E. NUMBER

DATE

MAINE KENNEBEC BRIDGE
KENNEBEC RIVER
RICHMOND, SAGADAHOC CTY. DRESDEN, LINCOLN CTY.

CROSS SECTIONS: LINCOLN ROAD

SHEET NUMBER

78

OF 238

Sta. 13+00.00 to Sta. 13+25.00

Filename: ...\078_Xsect_Lincoln Road_13+00_004.dgn Division: BRIDGE Username: dana.damren Date:3/27/2013

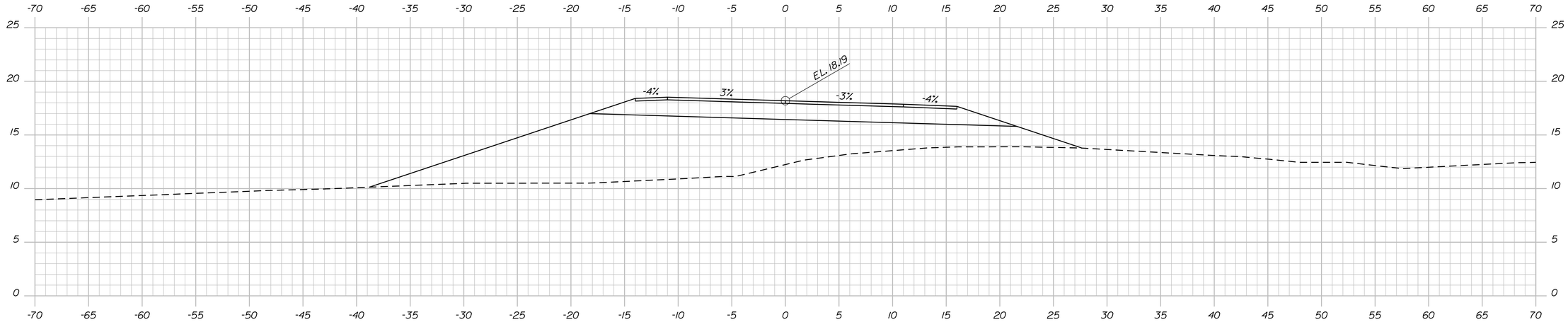

14+00.00

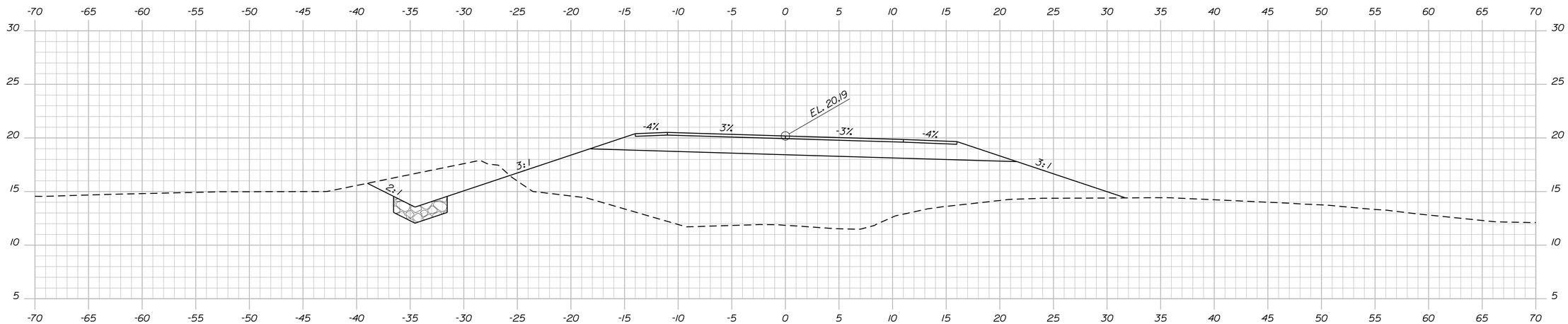

13+75.00

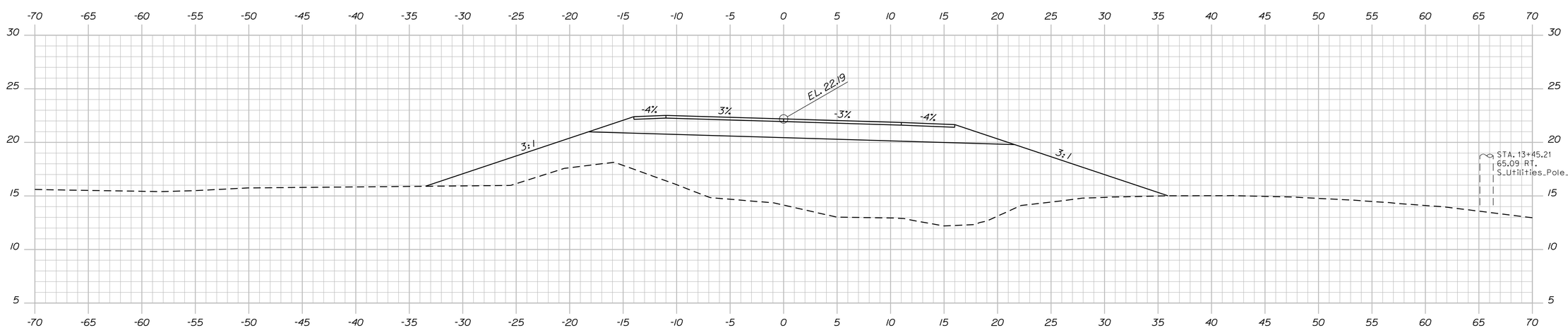

13+50.00

STATE OF MAINE
DEPARTMENT OF TRANSPORTATION

AC-BH-1267(400)

PIN 12674.00

BRIDGE NO. 2506

BRIDGE PLANS

PROJ. MANAGER	N. Benoit	BY	DATE
DESIGN-DETAILED	Team South	DMD/DMS	May 2012
CHECKED-REVIEWED	------	------	------
DESIGN2-DETAILED2	------	------	------
DESIGN3-DETAILED3	------	------	------
REVISIONS 1	------	------	------
REVISIONS 2	------	------	------
REVISIONS 3	------	------	------
REVISIONS 4	------	------	------
FIELD CHANGES	------	------	------

SIGNATURE

P.E. NUMBER

DATE

MAINE KENNEBEC BRIDGE
KENNEBEC RIVER
RICHMOND, SAGADAHOC CTY. DRESDEN, LINCOLN CTY.

CROSS SECTIONS: LINCOLN ROAD

SHEET NUMBER

79

OF 238

Filename: ...\079_Xsect_Lincoln Road_13+50_005.dgn Division: BRIDGE Username: dana.damren Date:3/27/2013

Sta. 13+50.00 to Sta. 14+00.00

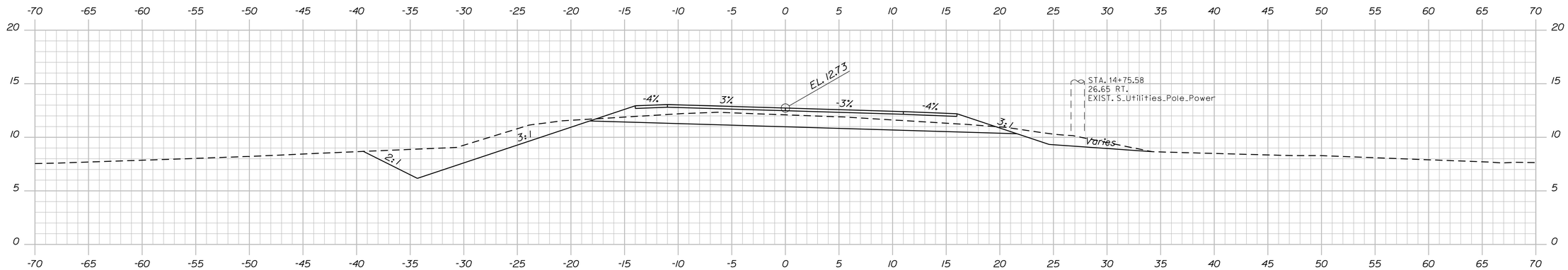

14+75.00

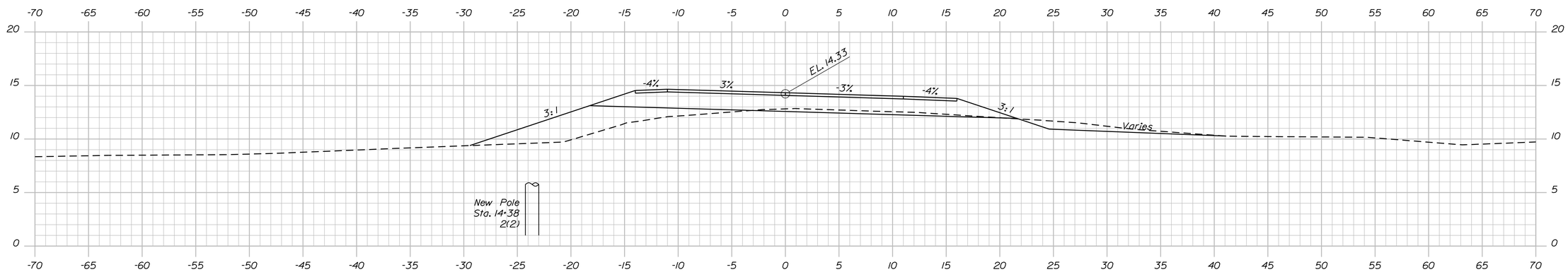

14+50.00

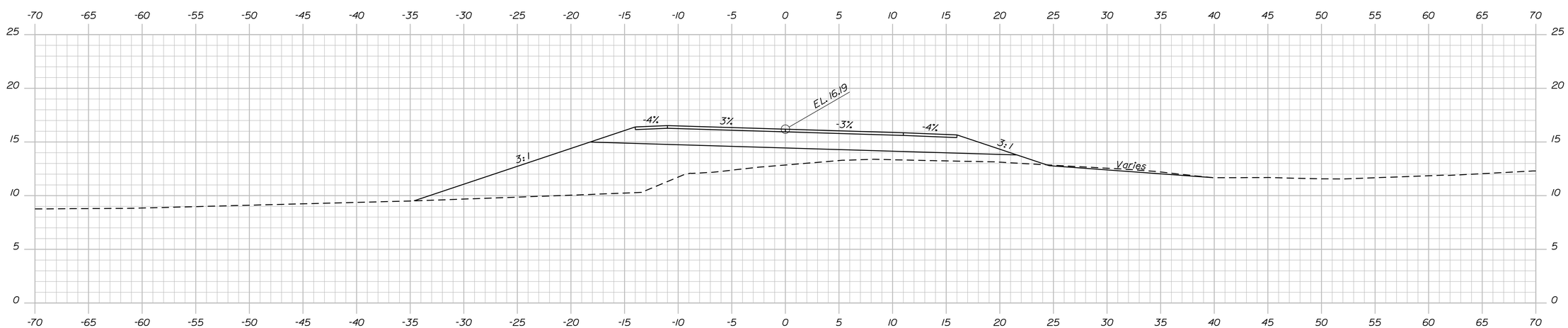

14+25.00

STATE OF MAINE
DEPARTMENT OF TRANSPORTATION

AC-BH-1267(400)

PIN 12674.00

BRIDGE NO. 2506

BRIDGE PLANS

PROJ. MANAGER	N. Benoit	BY	DATE
DESIGN-DETAILED	Team South	DMD/DMS	May 2012
CHECKED-REVIEWED	------	------	------
DESIGN2-DETAILED2	------	------	------
DESIGN3-DETAILED3	------	------	------
REVISIONS 1	------	------	------
REVISIONS 2	------	------	------
REVISIONS 3	------	------	------
REVISIONS 4	------	------	------
FIELD CHANGES	------	------	------

SIGNATURE

P.E. NUMBER

DATE

MAINE KENNEBEC BRIDGE
KENNEBEC RIVER
RICHMOND, SAGADAHOC CTY. DRESDEN, LINCOLN CTY.

CROSS SECTIONS: LINCOLN ROAD

SHEET NUMBER

80

OF 238

Filename: ...\080_Xsect_Lincoln Road_14+25_006.dgn Division: BRIDGE Username: dana.damren Date:3/27/2013

Sta. 14+25.00 to Sta. 14+75.00

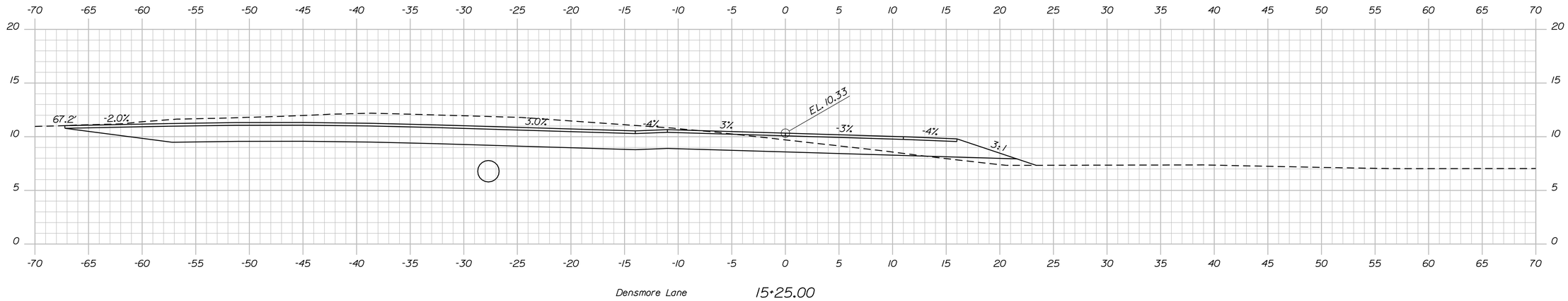

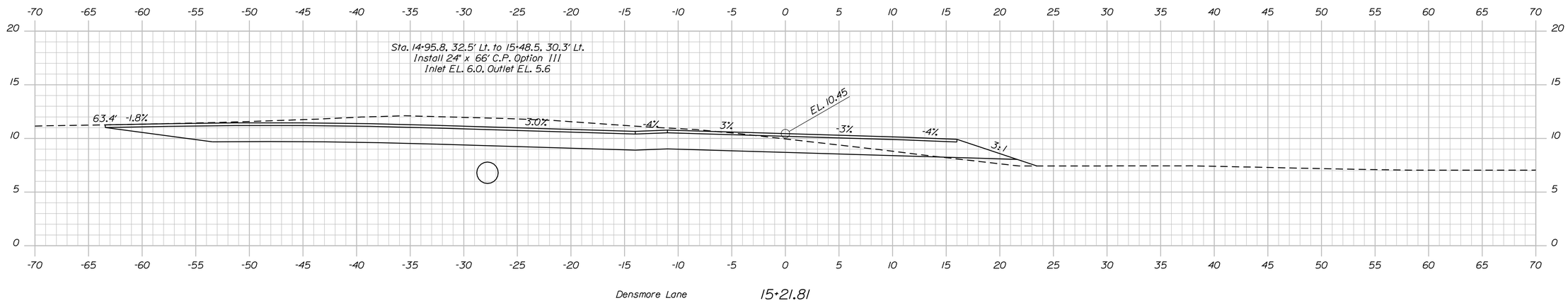

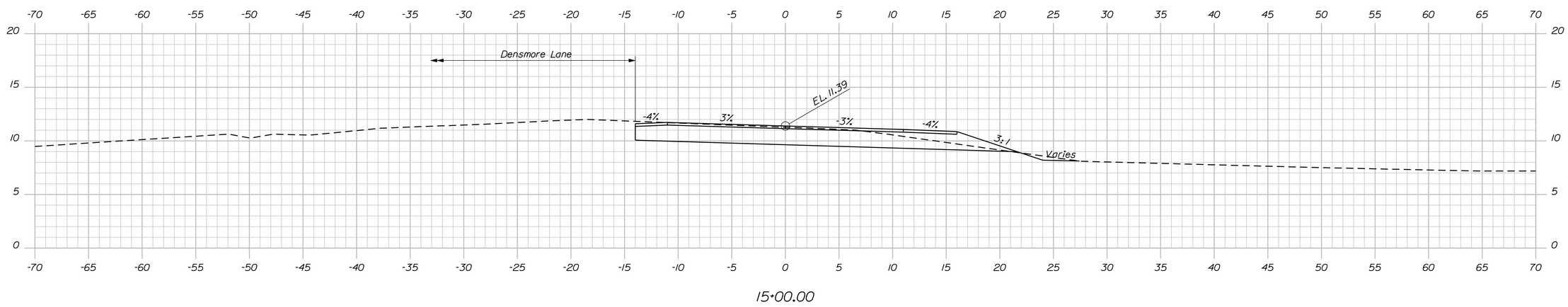

STATE OF MAINE
DEPARTMENT OF TRANSPORTATION

AC-BH-1267(400)

PIN 12674.00

BRIDGE NO. 2506

BRIDGE PLANS

PROJ. MANAGER	N. Benoit	BY	DATE
DESIGN-DETAILED	Team South	DMD/DMS	May 2012
CHECKED-REVIEWED	------	------	------
DESIGN2-DETAILED2	------	------	------
DESIGN3-DETAILED3	------	------	------
REVISIONS 1	------	------	------
REVISIONS 2	------	------	------
REVISIONS 3	------	------	------
REVISIONS 4	------	------	------
FIELD CHANGES	------	------	------

SIGNATURE

P.E. NUMBER

DATE

MAINE KENNEBEC BRIDGE
KENNEBEC RIVER
RICHMOND, SAGADAHOC CTY. DRESDEN, LINCOLN CTY.

CROSS SECTIONS: LINCOLN ROAD

SHEET NUMBER

81

OF 238

Sta. 15+00.00 to Sta. 15+25

Filename: ...\081_Xsect_Lincoln Road_15+00_007.dgn Division: BRIDGE Username: dana.damren Date:3/27/2013

Sta. 16+05.3 to 16+27.6
Install ET-Plus 25

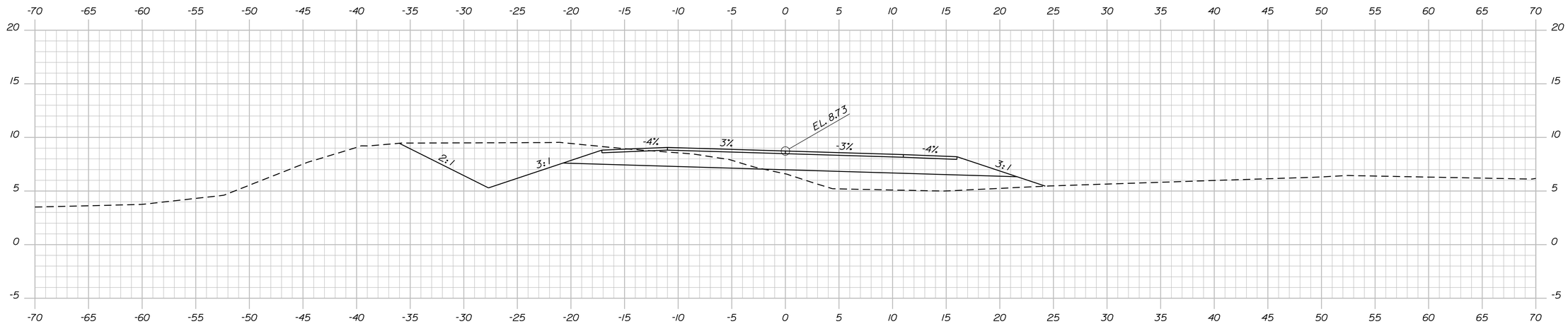

16+00.00

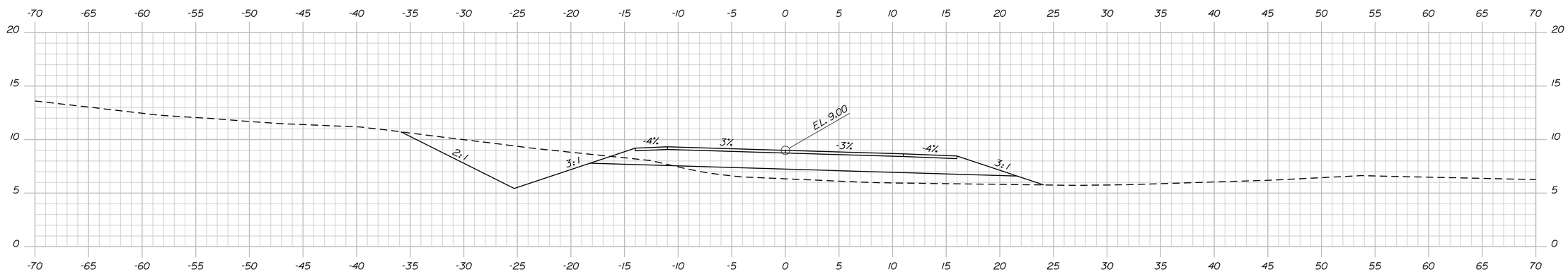

15+75.00

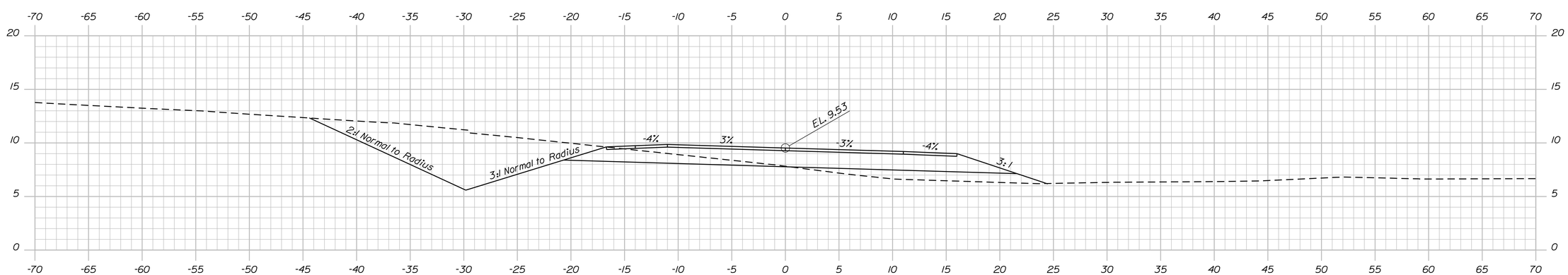

15+50.00

Sta. 15+50.00 to Sta. 16+00.00

STATE OF MAINE
DEPARTMENT OF TRANSPORTATION

AC-BH-1267(400)

PIN 12674.00

BRIDGE NO. 2506

BRIDGE PLANS

PROJ. MANAGER	N. Benoit	BY	DATE
DESIGN-DETAILED	Team South	DMD/DMS	May 2012
CHECKED-REVIEWED	------	------	------
DESIGN2-DETAILED2	------	------	------
DESIGN3-DETAILED3	------	------	------
REVISIONS 1	------	------	------
REVISIONS 2	------	------	------
REVISIONS 3	------	------	------
REVISIONS 4	------	------	------
FIELD CHANGES	------	------	------

SIGNATURE

P.E. NUMBER

DATE

MAINE KENNEBEC BRIDGE
KENNEBEC RIVER
RICHMOND, SAGADAHOC CTY. DRESDEN, LINCOLN CTY.

CROSS SECTIONS: LINCOLN ROAD

SHEET NUMBER
82
OF 238

Filename: ...\082_Xsect_Lincoln Road_15+50_008.dgn Division: BRIDGE Username: dana.damren Date:3/27/2013

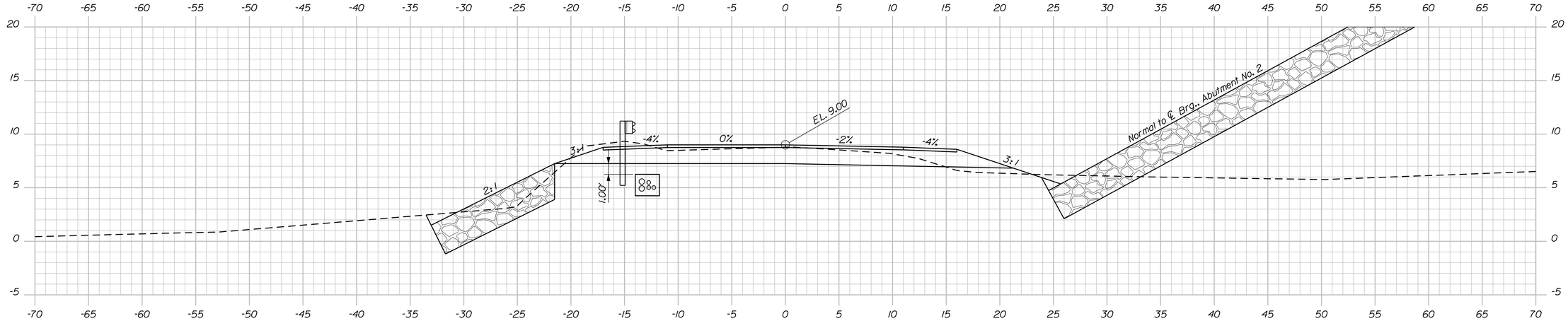

Sta. 16+72.4 to 16+96.6
Install ET-Plus 25

16+75.00

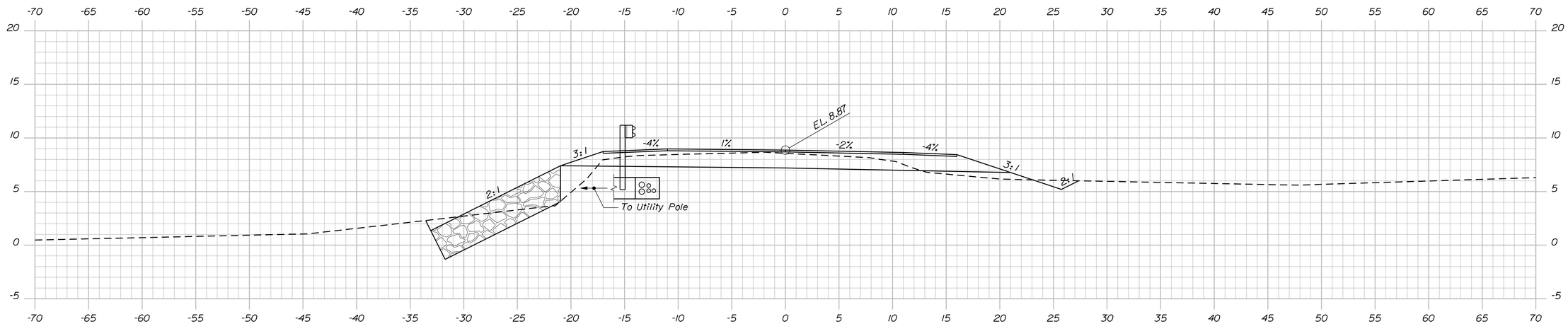

Sta. 16+27.6 to 16+72.4
Install 50 L.F. GR Type 3c

16+50.00

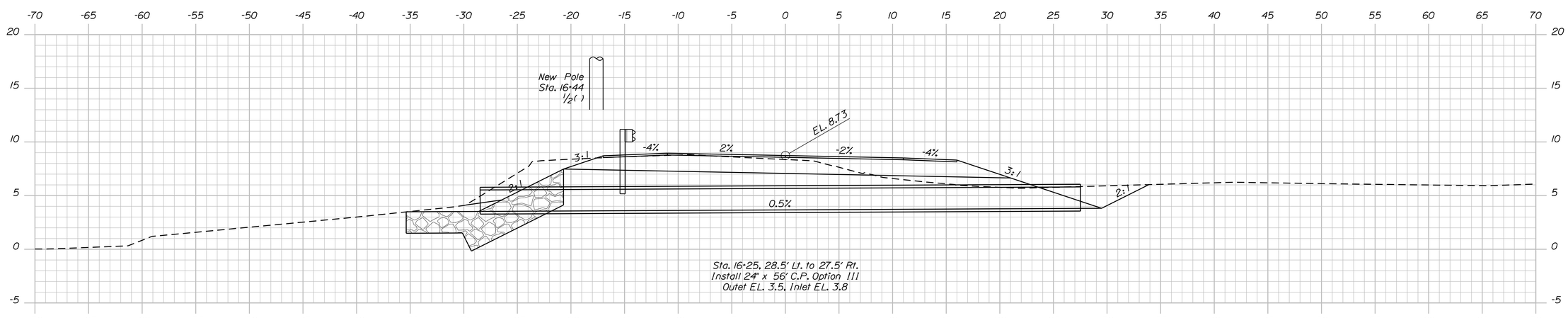

Sta. 16+25. 28.5' Lt. to 27.5' Rt.
Install 24" x 56' C.P. Option III
Outet EL. 3.5, Inlet EL. 3.8

16+25.00

STATE OF MAINE
DEPARTMENT OF TRANSPORTATION

AC-BH-1267(400)

PIN
12674.00

BRIDGE NO. 2506

BRIDGE PLANS

PROJ. MANAGER	N. Benoit	BY	DATE
DESIGN-DETAILED	Team South	DMD/DMS	May 2012
CHECKED-REVIEWED	-----	-----	-----
DESIGN2-DETAILED2	-----	-----	-----
DESIGN3-DETAILED3	-----	-----	-----
REVISIONS 1	-----	-----	-----
REVISIONS 2	-----	-----	-----
REVISIONS 3	-----	-----	-----
REVISIONS 4	-----	-----	-----
FIELD CHANGES	-----	-----	-----

SIGNATURE

P.E. NUMBER

DATE

MAINE KENNEBEC BRIDGE
KENNEBEC RIVER
RICHMOND, SAGADAHOC CTY. DRESDEN, LINCOLN CTY.

CROSS SECTIONS: LINCOLN ROAD

SHEET NUMBER
83
OF 238

Filename: ...\083_Xsect_Lincoln Road_16+25_009.dgn Division: BRIDGE Username: dana.damren Date:3/27/2013

Sta. 16+25.00 to Sta. 16+75.00

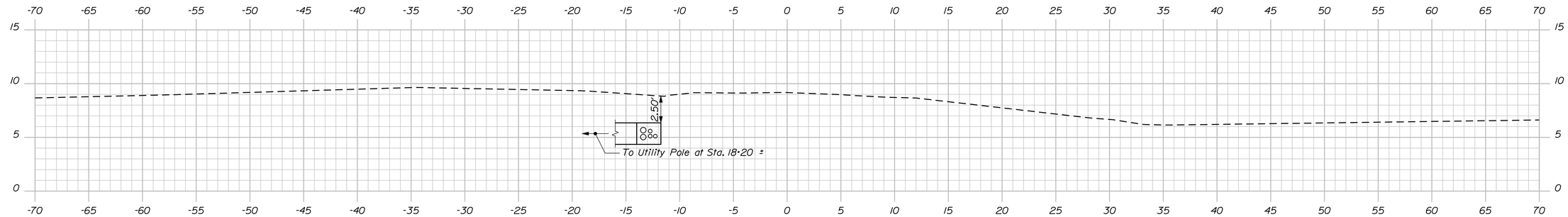

17+75.00

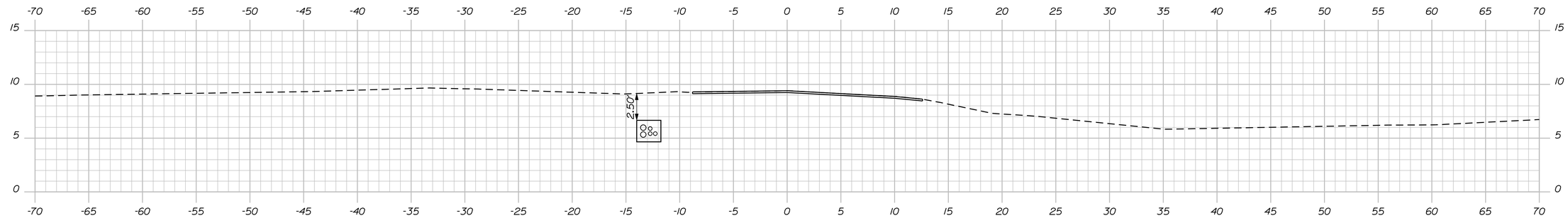

End Transition 17+50.00 Match Existing

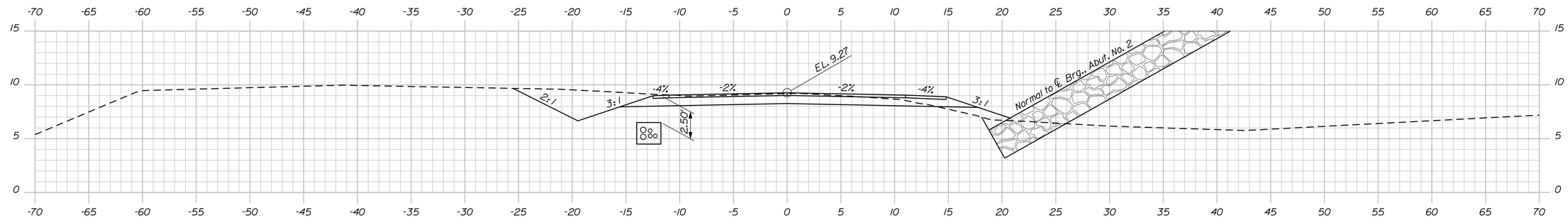

17+25.00

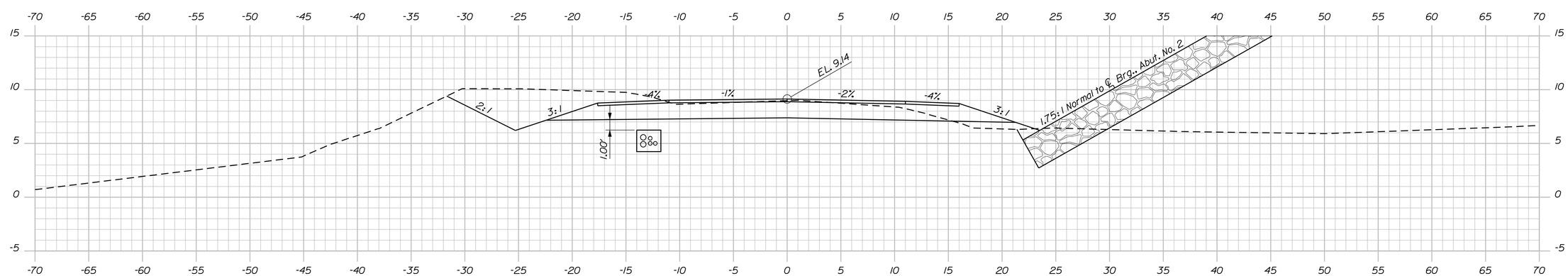

17+00.00

STATE OF MAINE
DEPARTMENT OF TRANSPORTATION

AC-BH-1267(400)

PIN 12674.00

BRIDGE NO. 2506

BRIDGE PLANS

PROJ. MANAGER	N. Benoit		
DESIGN-DETAILED	Team South		
CHECKED-REVIEWED	------	------	------
DESIGN2-DETAILED2	------	------	------
DESIGN3-DETAILED3	------	------	------
REVISIONS 1	------	------	------
REVISIONS 2	------	------	------
REVISIONS 3	------	------	------
REVISIONS 4	------	------	------
FIELD CHANGES	------	------	------
	BY	DATE	SIGNATURE
	N. Benoit	May 2012	P.E. NUMBER
	DMD/DMS		DATE

MAINE KENNEBEC BRIDGE
KENNEBEC RIVER
RICHMOND, SAGADAHOC CTY. DRESDEN, LINCOLN CTY.

CROSS SECTIONS: LINCOLN ROAD

SHEET NUMBER

84

OF 238

Sta. 17+00.00 to Sta. 17+75.00

Filename: ...\084_Xsect_Lincoln Road_17+00_010.dgn Division: BRIDGE Username: dana.damren Date:3/27/2013

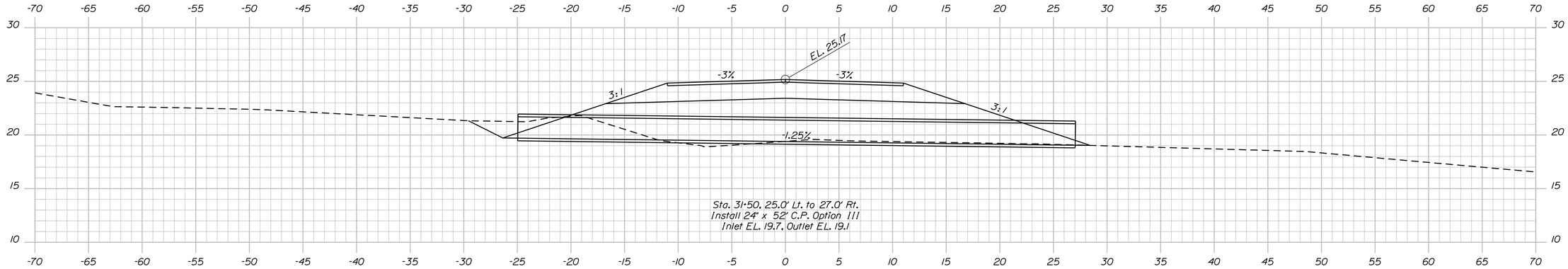

31+50.00

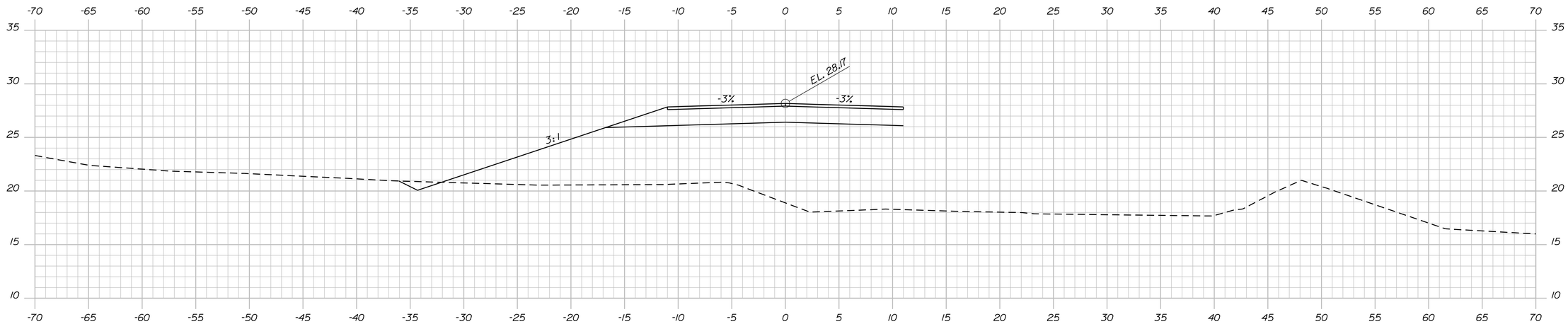

31+25.00

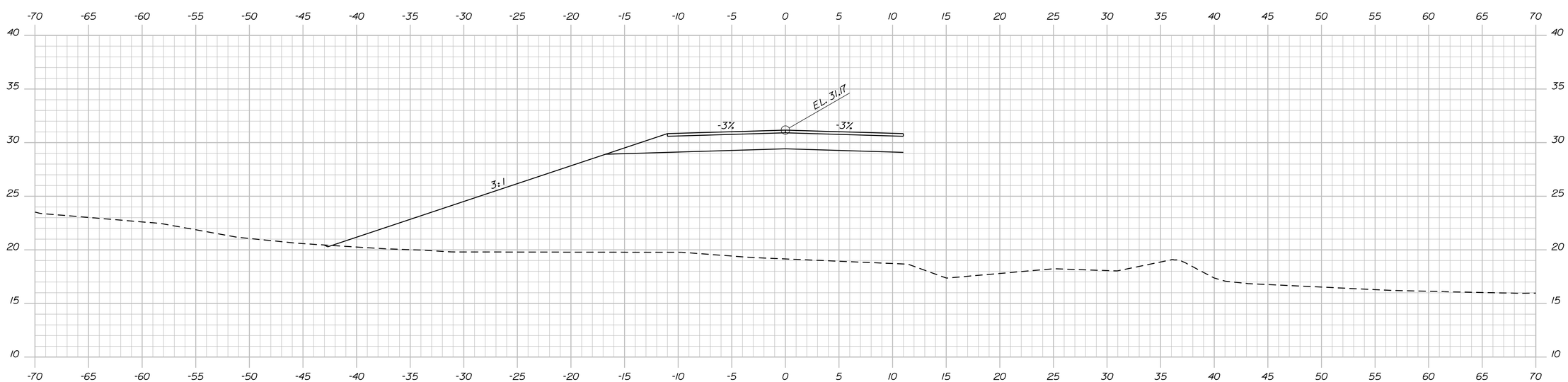

31+00.00

Sta. 31+00.00 to Sta. 31+50.00

STATE OF MAINE
DEPARTMENT OF TRANSPORTATION

AC-BH-1267(400)

WIN 12674.00

BRIDGE NO. 2506

BRIDGE PLANS

PROJ. MANAGER	N. Benoit			
DESIGN-DETAILED	Team South	DMD/DMS	May 2012	SIGNATURE
CHECKED-REVIEWED	------	------	------	
DESIGN2-DETAILED2	------	------	------	P.E. NUMBER
DESIGN3-DETAILED3	------	------	------	
REVISIONS 1	------	------	------	
REVISIONS 2	------	------	------	DATE
REVISIONS 3	------	------	------	
REVISIONS 4	------	------	------	
FIELD CHANGES	------	------	------	

MAINE KENNEBEC BRIDGE
KENNEBEC RIVER
RICHMOND, SAGADAHOC CTY. DRESDEN, LINCOLN CTY.

CROSS SECTIONS: WATER DIST. RD.

SHEET NUMBER

85

OF 238

Filename: ...\085_Xsect_Water District Road_31+00DGN Design BRIDGE Date:3/27/2013 Username: dana.damren

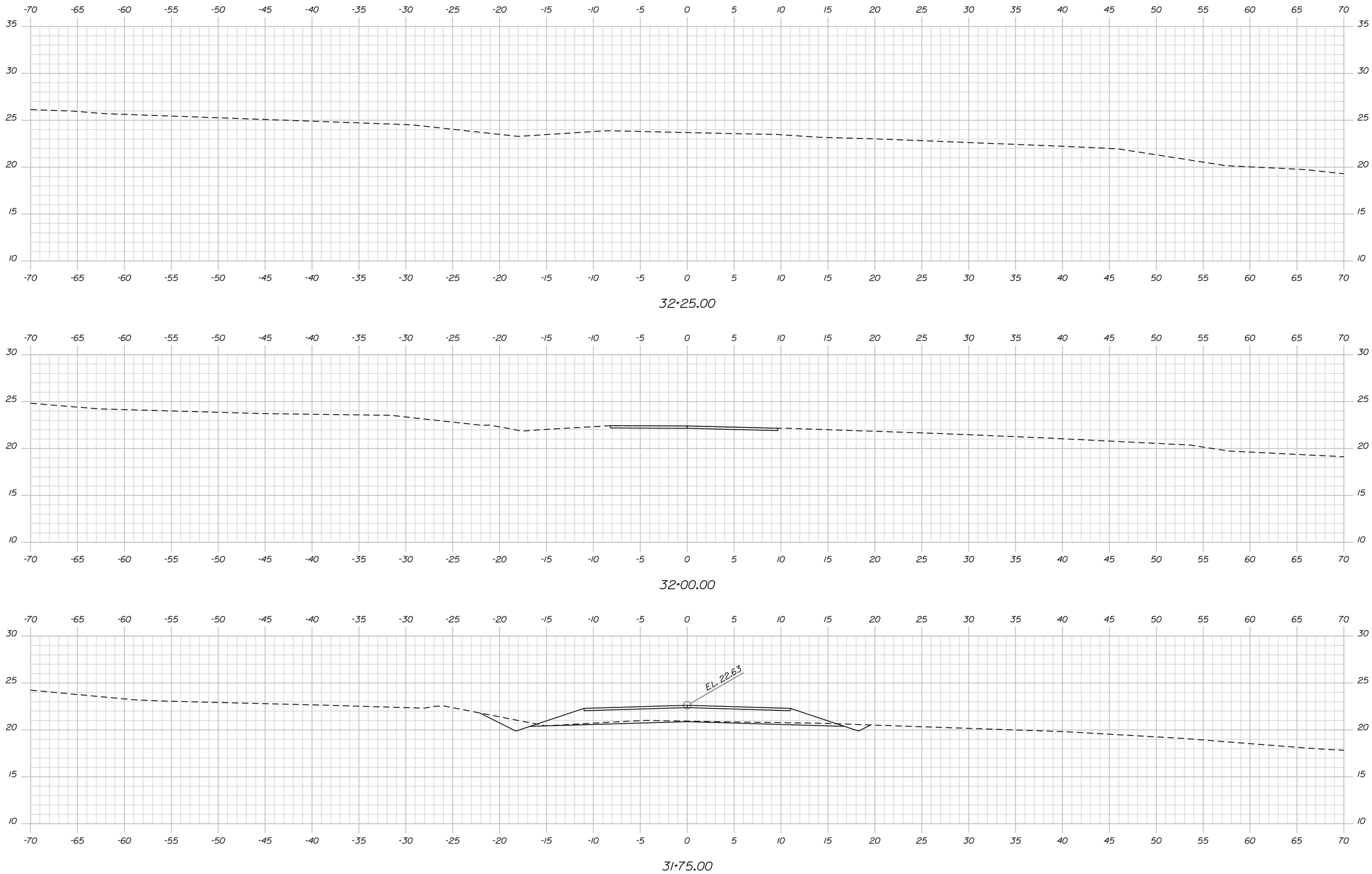

STATE OF MAINE
DEPARTMENT OF TRANSPORTATION

AC-BH-1267(400)

WIN 12674.00

BRIDGE NO. 2506

BRIDGE PLANS

PROJ. MANAGER	N. Benoit	BY	DATE
DESIGN-DETAILED	Team South	DMD/DMS	May 2012
CHECKED-REVIEWED	------	------	------
DESIGN2-DETAILED2	------	------	------
DESIGN3-DETAILED3	------	------	------
REVISIONS 1	------	------	------
REVISIONS 2	------	------	------
REVISIONS 3	------	------	------
REVISIONS 4	------	------	------
FIELD CHANGES	------	------	------

SIGNATURE

P.E. NUMBER

DATE

MAINE KENNEBEC BRIDGE
KENNEBEC RIVER
RICHMOND, SAGADAHOC CTY. DRESDEN, LINCOLN CTY.

CROSS SECTIONS: WATER DIST. RD.

SHEET NUMBER

86

OF 238

Sta. 31+75.00 to Sta. 32+25.00

Filename: ...\086_Xsect_Water District Rood_31+75.DWG Layout: BRIDGE Username: dana.damren Date: 3/27/2013

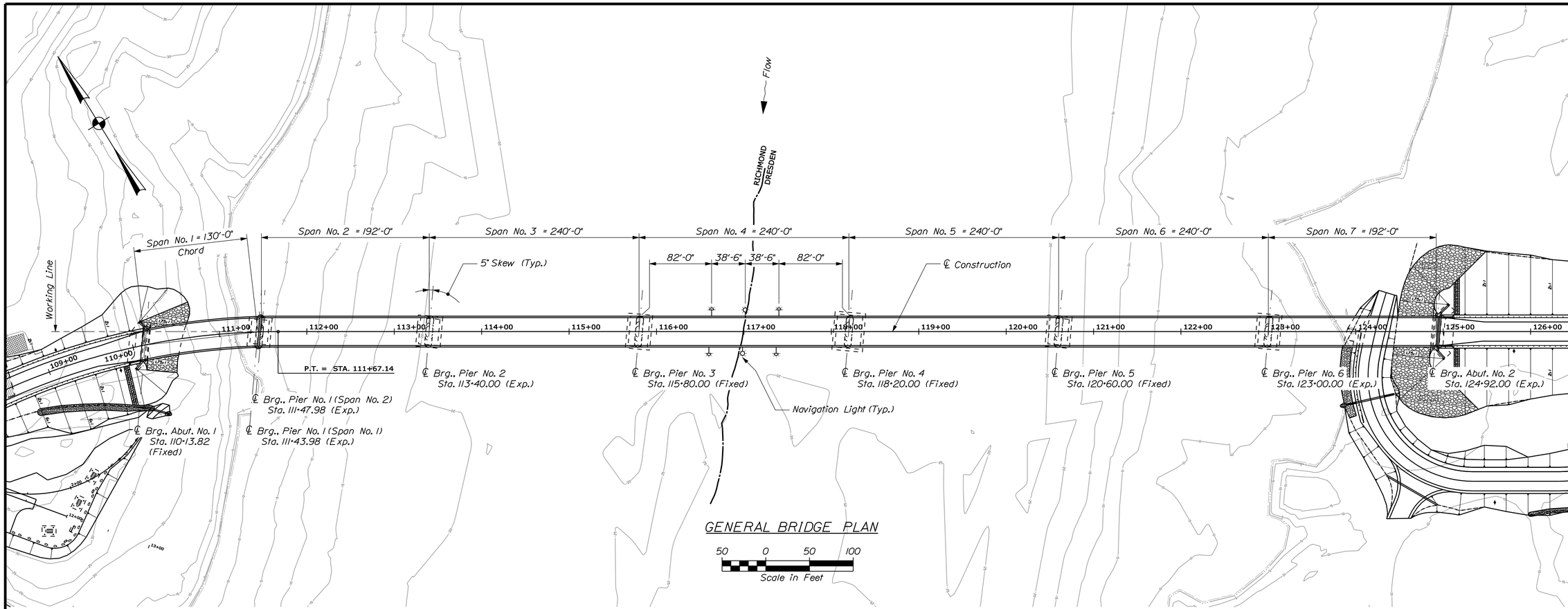

GENERAL BRIDGE PLAN

50 0 50 100
Scale in Feet

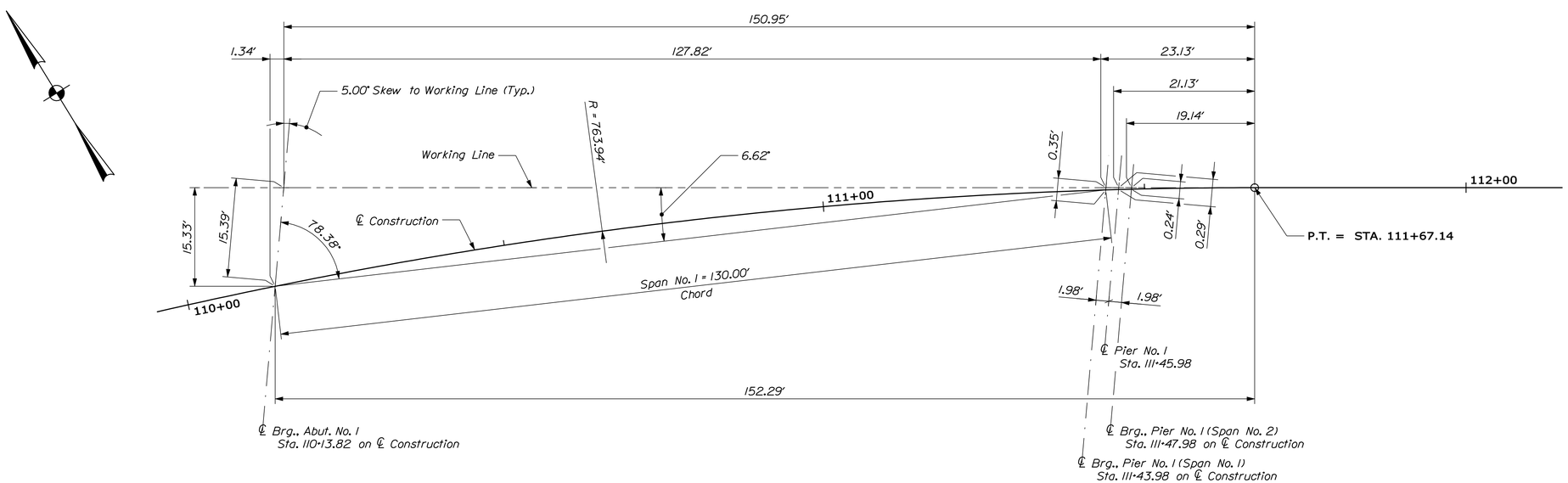

SPAN NO. 1 LAYOUT PLAN

STATE OF MAINE
DEPARTMENT OF TRANSPORTATION

AC-BH-1267(400)

WIN 12674.00

BRIDGE NO. 2506

BRIDGE PLANS

			DATE
PROJ. MANAGER	N. Benoit		
DESIGN-DETAILED	Team South	D. Damren	Oct. 2012
CHECKED-REVIEWED	E. Caswell	-----	Oct. 2012
DESIGN2-DETAILED2	-----	-----	-----
DESIGN3-DETAILED3	-----	-----	-----
REVISIONS 1	-----	-----	-----
REVISIONS 2	-----	-----	-----
REVISIONS 3	-----	-----	-----
REVISIONS 4	-----	-----	-----
FIELD CHANGES	-----	-----	-----

SIGNATURE

P.E. NUMBER

DATE

MAINE KENNEBEC BRIDGE
KENNEBEC RIVER
RICHMOND, SAGADAHOC CTY. DRESDEN, LINCOLN CTY.

GENERAL BRIDGE PLAN

SHEET NUMBER
87
OF 238

Filename: ...\087_GeneralBridge Plan.dgn Division: BRIDGE Username: dana.damren Date:3/27/2013

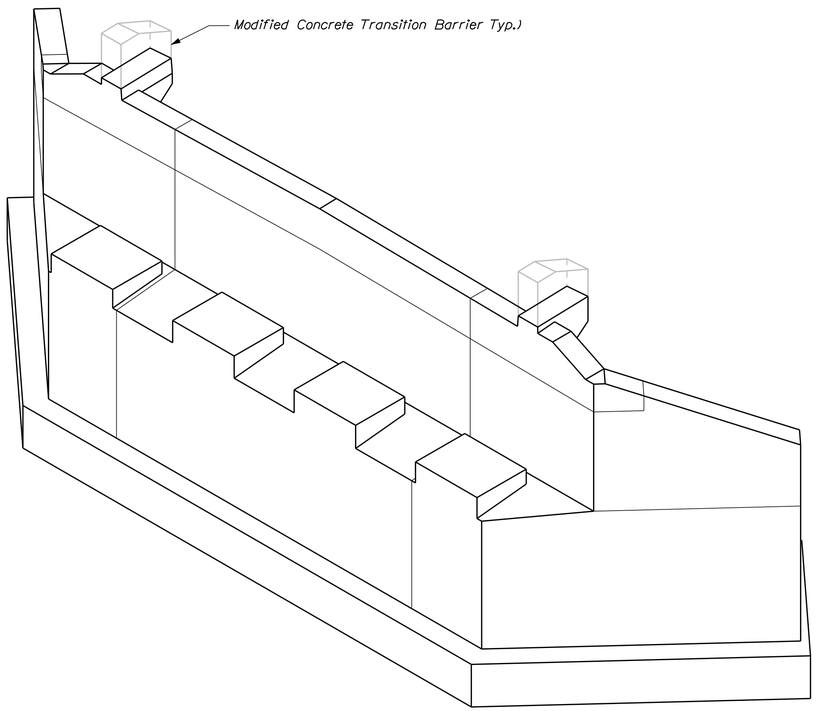

ABUTMENT NO. 2 ISOMETRIC VIEW

ABUTMENT PILE NOTES

1. The maximum factored pile load is 360.0 kips.

2. H-pile material shall be ASTM A 572, Grade 50.

3. Estimate of piles required:

   Abutment No. 2: 19 ~ HP 14x89 @ 26 ft.

4. The order lengths of the piles shall include an additional 5 feet of length for each test pile to accommodate dynamic pile testing equipment.

5. All piles shall be equipped with a pile tip in accordance with Standard Specifications Section 501.10, Prefabricated Pile Tips.

6. Piles marked with an arrow shall be battered 3 in./ft in the direction of the arrow.

7. The Contractor shall perform and submit a wave equation analysis for review and acceptance by the Resident. The maximum allowable driving stress is 0.90 times Fy. The submittal analyses shall include the proposed stopping criteria based on the wave equation analysis and the proposed driving system. The stopping criteria shall include the blows per inch and the number of 1-in. intervals at which pile installation may be terminated. The cost of performing the wave equation analysis will be considered incidental to Item No. 501.92, Pile Driving Equipment Mobilization.

8. The Contractor shall perform three (3) dynamic pile load tests with signal matching and 24-hour (minimum) restrikes to confirm the ultimate resistance of the piles. The dynamic pile load tests shall be performed on the first production plumb pile and first production battered pile driven. The third dynamic load test shall be conducted on one pile at the opposite side of the foundation. The required nominal resistance is the maximum factored axial pile load divided by a resistance factor equal to 0.65 per LFRD Specifications.

ABUTMENT NOTES

1. The maximum factored applied footing pressure is 33.6 ksf.

2. Structural Earth Excavation, Abutments and Retaining Walls, required more than 12 inches below the bottom of the structure, will be paid for in accordance with Standard Specifications Section 206, Structural Excavation.

3. Foundation concrete shall be placed on bedrock cleaned of all loose rock and soil. The bedrock subgrade shall be confirmed to be relatively level. Where the bedrock surface slope exceeds 6H:1V, the bedrock surface shall be benched to create level steps or made completely level. Prior to placing the concrete, the bearing surface shall be washed with high - pressure water and air.

4. When the prepared bedrock surface is below the bottom of the footing elevation shown on the plans, concrete fill may be placed to fill the void. Concrete fill shall be Class "A" concrete. Alternatively, the footing thickness may be increased up to an additional 1 foot as approved by the Resident. If the footing thickness is increased, the top of the footing elevation shall be as shown on the plans.

5. When bedrock protrudes above the bottom of the footing shown, the footing may be raised and vertical reinforcing may be cut in the field with the approval of the Resident. The minimum allowable footing thickness is shown on the plans. Payment for adjusting footing depth and adjusting reinforcing steel will be considered incidental to related Contract items. No separate payment will be made.

6. At the option of the Resident, bedrock which protrudes above a horizontal plane 12 inches below the proposed footing elevation may be removed. Payment for bedrock removal shall be made under Item No. 206.092, Structural Rock Excavation - Major Structures.

7. Reinforcing steel shall have a minimum concrete cover of 2 inches in the walls and 3 inches in the footings unless otherwise noted.

8. Place 4-in. diameter drains in the breastwall and wingwalls at 10-ft maximum spacing. The exact location will be determined by the Resident.

9. The concrete pedestal elevations shown on "Abutment No. 2 Elevation" are approximate. The actual elevations shall be adjusted to accommodate the bearings supplied by the Contractor. The elevations given assume an overall bearing height of 8 inches at ℄ Bearing.

10. The Contractor shall install Transition Barrier vertical closed stirrups, as shown on "Abut. No. 2 Conc. Trans. Barriers" sheet, prior to the placement of the curb concrete.

11. Cover joints where waterstops are not required in accordance with Standard Details Section 502.

12. Construct French Drains behind the abutments and wingwalls in accordance with Standard Specifications Section 512, French Drains.

13. Abutments, wingwalls and their footings shall be backfilled with Granular Borrow. Pay limits will be the structural excavation limits in cut areas and a vertical plane located 10 feet behind the walls in fill areas.

14. Payment for Abutment No. 1 Footing will be made under Item No. 502.21, Structural Concrete Abutments and Retaining Walls (CY). Payment for all other abutment concrete will be made under Item No. 502.219, Structural Concrete Abutments and Retaining Walls (LS).

15. The Utility Conduits passing through the abutment backwalls shall be either cast in place or run through a utility blockout, at the option of the Contractor. Additional reinforcing steel shall be provided around the Utility Conduit for either option, as shown on the plans. If blockouts are used, all voids around the Conduits shall be fully grouted with a MaineDOT pre - approved product.

STATE OF MAINE
DEPARTMENT OF TRANSPORTATION

AC-BH-1267(400)

WIN 12674.00

BRIDGE NO. 2506

BRIDGE PLANS

PROJ. MANAGER	N. Benoit			
DESIGN-DETAILED	Team South	D. Damren	Feb. 2013	DATE
CHECKED-REVIEWED	E. Caswell	------	Feb. 2013	SIGNATURE
DESIGN2-DETAILED2	------	------	------	
DESIGN3-DETAILED3	------	------	------	P.E. NUMBER
REVISIONS 1	------	------	------	
REVISIONS 2	------	------	------	DATE
REVISIONS 3	------	------	------	
REVISIONS 4	------	------	------	
FIELD CHANGES	------	------	------	

MAINE KENNEBEC BRIDGE
KENNEBEC RIVER
RICHMOND, SAGADAHOC CTY. DRESDEN, LINCOLN CTY.

ABUTMENT NOTES

SHEET NUMBER
88
OF 238

Filename: ...\MSTA\088_Abutment_Notes.dgn Division: BRIDGE Username: dana.damren Date:3/27/2013

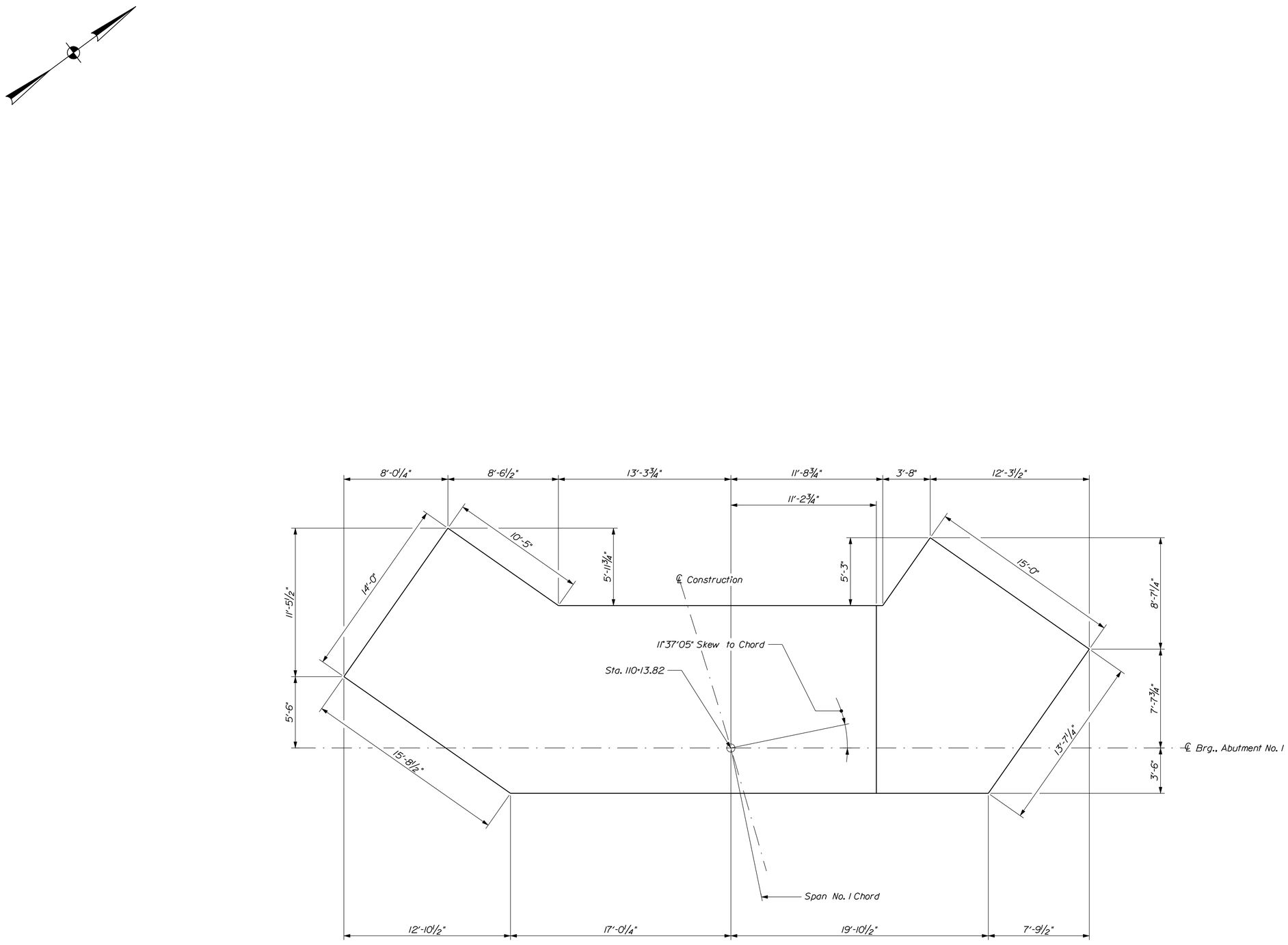

ABUTMENT NO. 1 FOOTING PLAN

PROJ. MANAGER	N. Benoit	BY	DATE
DESIGN-DETAILED	D. Edton	D. Damren	Nov. 2012
CHECKED-REVIEWED	E. Caswell	B. Nichols	Feb. 2013
DESIGN2-DETAILED2	------	------	------
DESIGN3-DETAILED3	------	------	------
REVISIONS 1	------	------	------
REVISIONS 2	------	------	------
REVISIONS 3	------	------	------
REVISIONS 4	------	------	------
FIELD CHANGES	------	------	------

SIGNATURE

P.E. NUMBER

DATE

STATE OF MAINE
DEPARTMENT OF TRANSPORTATION

AC-BH-1267(400)

WIN 12674.00

BRIDGE NO. 2506

BRIDGE PLANS

MAINE KENNEBEC BRIDGE
KENNEBEC RIVER
RICHMOND, SAGADAHOC CTY. DRESDEN, LINCOLN CTY.

ABUT. NO. 1 FOOTING PLAN

SHEET NUMBER

89

OF 238

Filename: ...\089_Abutment_No. 1 Footing Plan.dgn Division: BRIDGE Username: dana.damren Date:3/27/2013

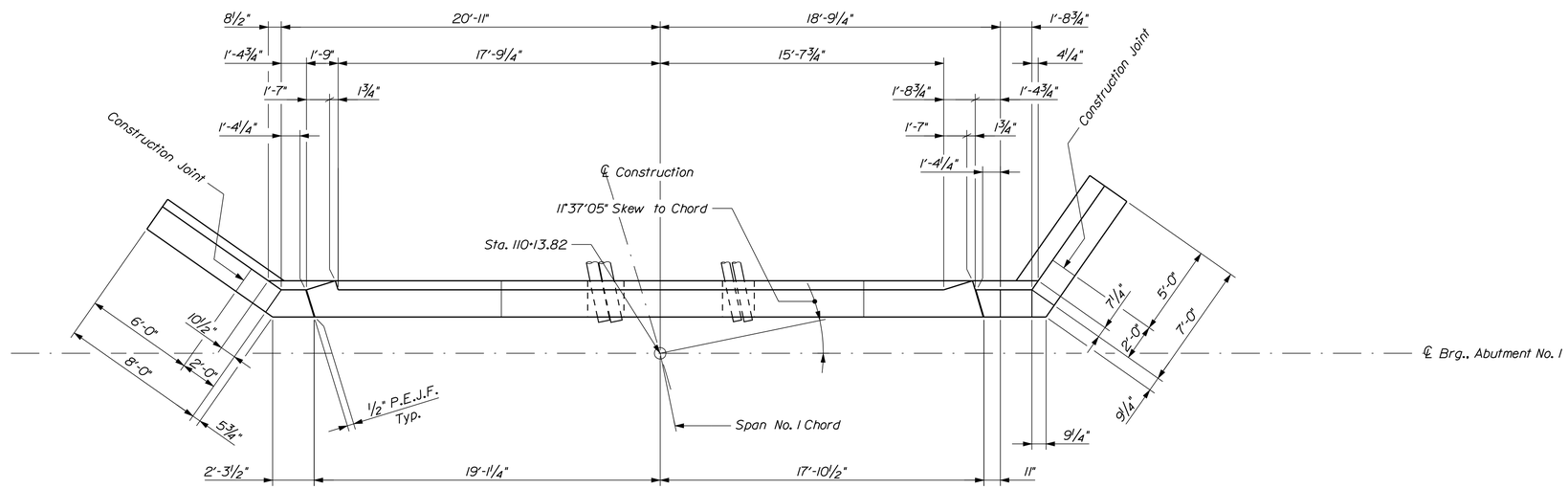

ABUTMENT NO. 1 BACKWALL PLAN

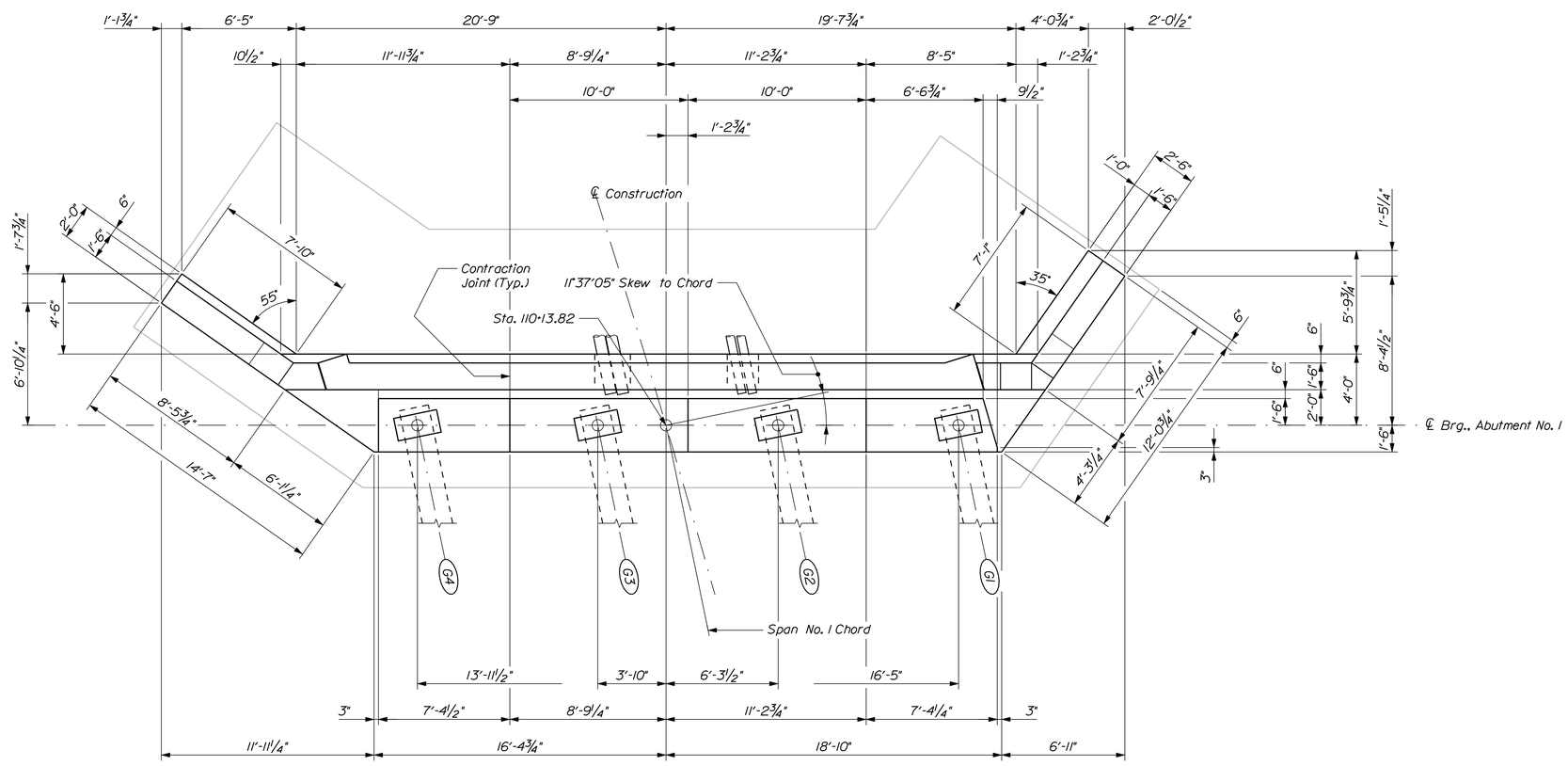

ABUTMENT NO. 1 PLAN

STATE OF MAINE
DEPARTMENT OF TRANSPORTATION

AC-BH-1267(400)

WIN 12674.00

BRIDGE NO. 2506

BRIDGE PLANS

		BY	DATE
PROJ. MANAGER	N. Benoit		
DESIGN-DETAILED	D. Edton	D. Damren	Nov. 2012
CHECKED-REVIEWED	E. Caswell	B. Nichols	Feb. 2013
DESIGN2-DETAILED2	------	------	------
DESIGN3-DETAILED3	------	------	------
REVISIONS 1	------	------	------
REVISIONS 2	------	------	------
REVISIONS 3	------	------	------
REVISIONS 4	------	------	------
FIELD CHANGES	------	------	------

SIGNATURE

P.E. NUMBER

DATE

MAINE KENNEBEC BRIDGE
KENNEBEC RIVER
RICHMOND, SAGADAHOC CTY. DRESDEN, LINCOLN CTY.

ABUTMENT NO. 1 PLAN

SHEET NUMBER

90

OF 238

Filename: ...\090_Abutment_No. 1 Plan.dgn Division: BRIDGE Username: dana.damren Date:3/27/2013

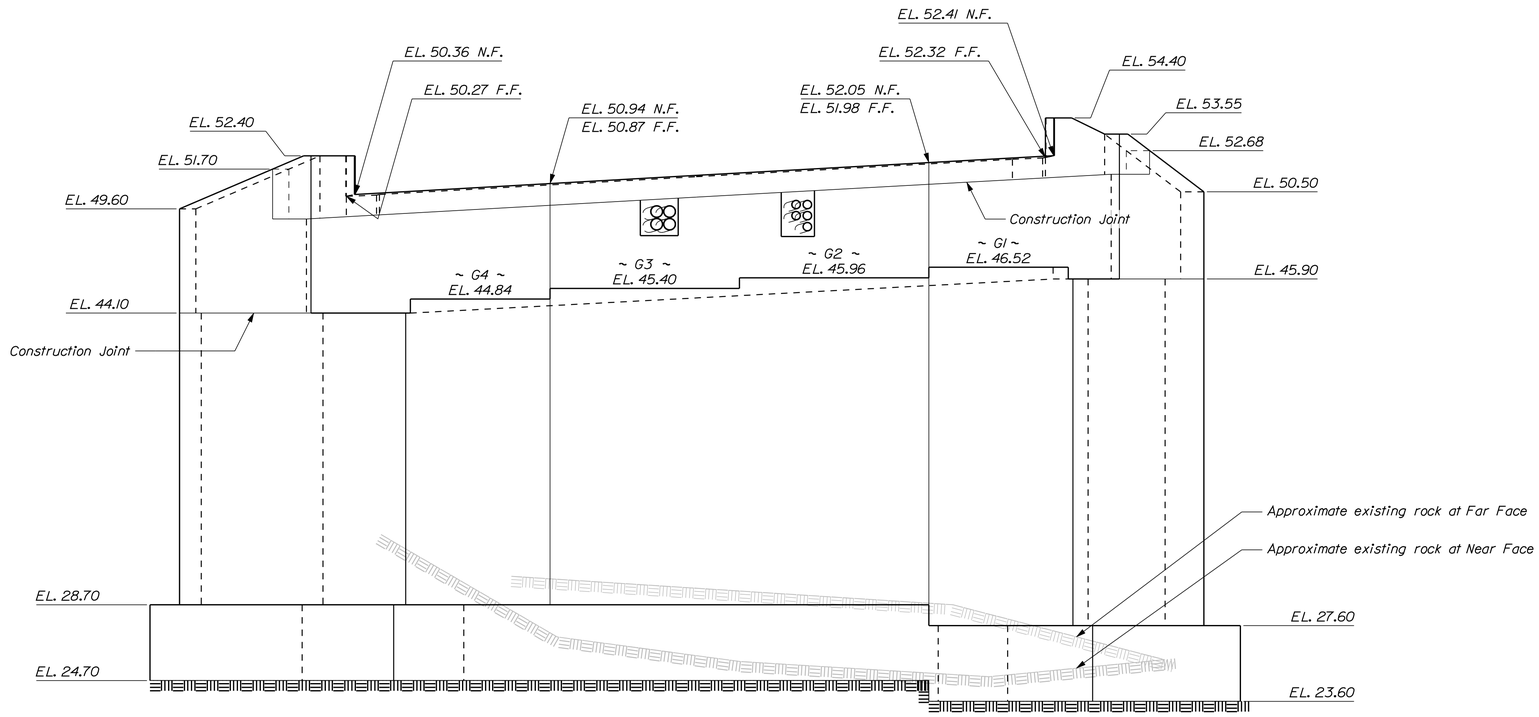

ABUTMENT NO. 1 FRONT ELEVATION

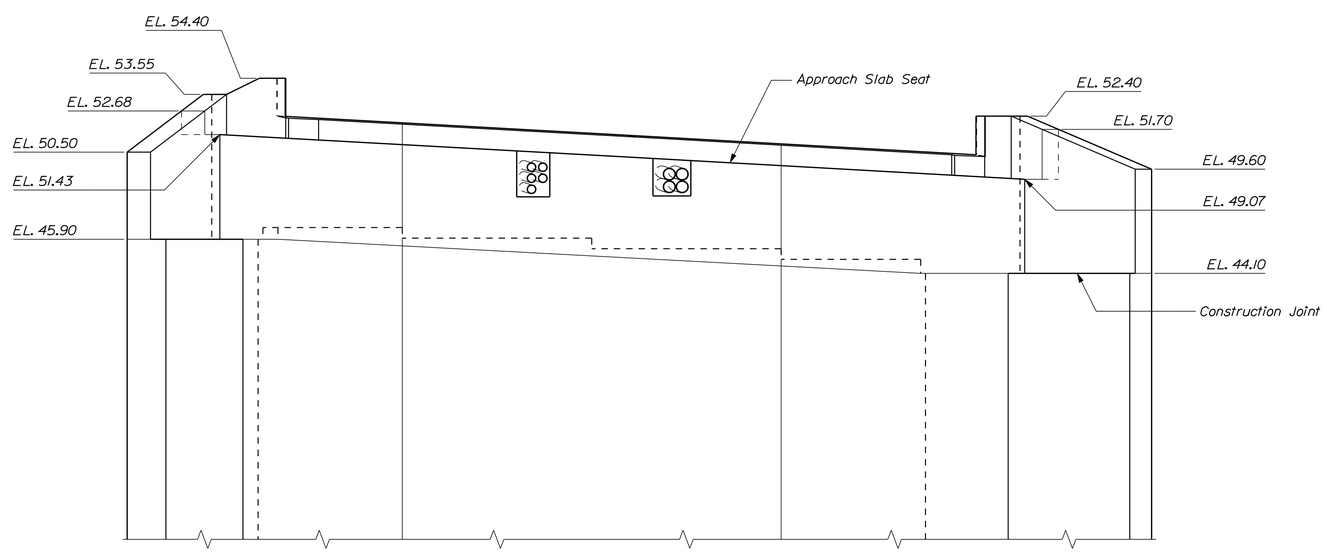

ABUTMENT NO. 1 REAR ELEVATION

STATE OF MAINE
DEPARTMENT OF TRANSPORTATION

AC-BH-1267(400)

WIN 12674.00

BRIDGE NO. 2506

BRIDGE PLANS

		BY	DATE
PROJ. MANAGER	N. Benoit		
DESIGN-DETAILED	D. Eaton	D. Damren	Nov. 2012
CHECKED-REVIEWED	E. Caswell	B. Nichols	Feb. 2013
DESIGN2-DETAILED2	------	------	------
DESIGN3-DETAILED3	------	------	------
REVISIONS 1	------	------	------
REVISIONS 2	------	------	------
REVISIONS 3	------	------	------
REVISIONS 4	------	------	------
FIELD CHANGES	------	------	------

SIGNATURE

P.E. NUMBER

DATE

MAINE KENNEBEC BRIDGE
KENNEBEC RIVER
RICHMOND, SAGADAHOC CTY. DRESDEN, LINCOLN CTY.

ABUTMENT NO. 1 ELEVATIONS

SHEET NUMBER

91

OF 238

Filename: ...\091_Abutment_No. 1 Elevations.dgn Division: BRIDGE Username: dana.damren Date:3/27/2013

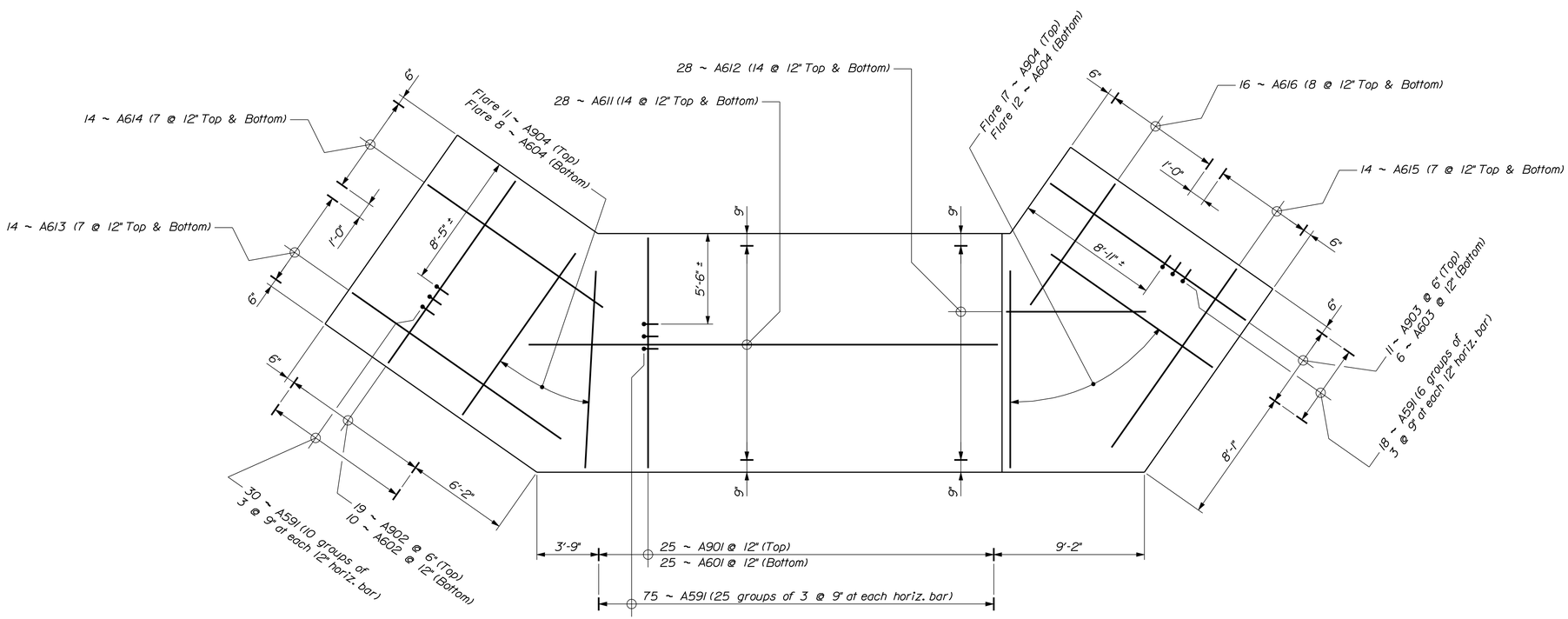

ABUTMENT NO. 1 FOOTING REINFORCING PLAN

STATE OF MAINE
DEPARTMENT OF TRANSPORTATION

AC-BH-1267(400)

WIN 12674.00

BRIDGE NO. 2506

BRIDGE PLANS

PROJ. MANAGER	N. Benoit	BY	DATE
DESIGN-DETAILED	D. Eaton	D. Damren	Dec. 2012
CHECKED-REVIEWED	E. Caswell	B. Nichols	Feb. 2013
DESIGN2-DETAILED2	------	------	------
DESIGN3-DETAILED3	------	------	------
REVISIONS 1	------	------	------
REVISIONS 2	------	------	------
REVISIONS 3	------	------	------
REVISIONS 4	------	------	------
FIELD CHANGES	------	------	------

SIGNATURE

P.E. NUMBER

DATE

MAINE KENNEBEC BRIDGE
KENNEBEC RIVER
RICHMOND, SAGADAHOC CTY. DRESDEN, LINCOLN CTY.

ABUT. NO. 1 FOOTING REINF.

SHEET NUMBER

92

OF 238

Filename: ...\092_Abutment_No.1 Footing Reinforcing.dgn Division: BRIDGE Username: dana.damren Date:3/27/2013

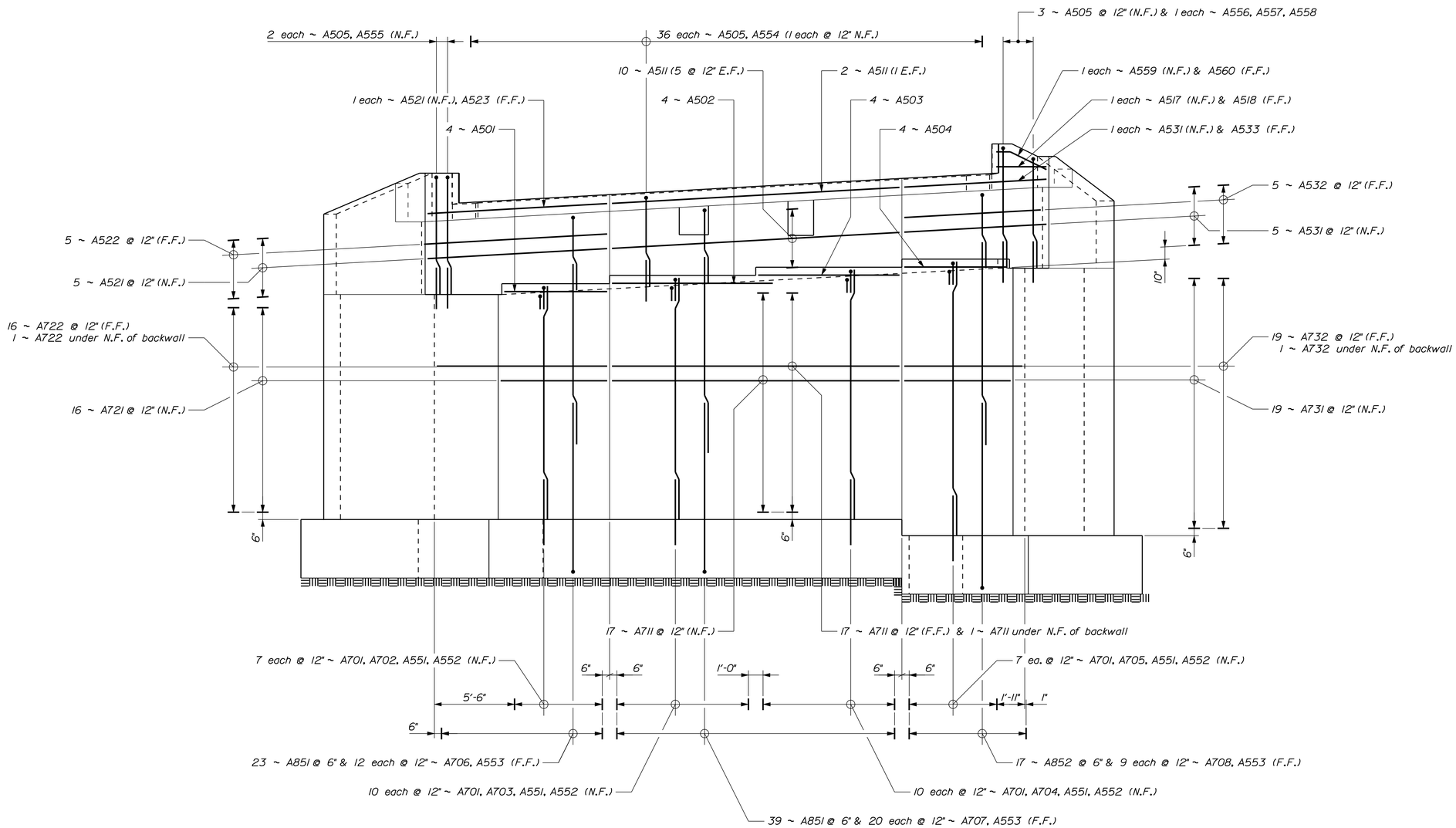

ABUTMENT NO. 1 REINFORCING ELEVATION

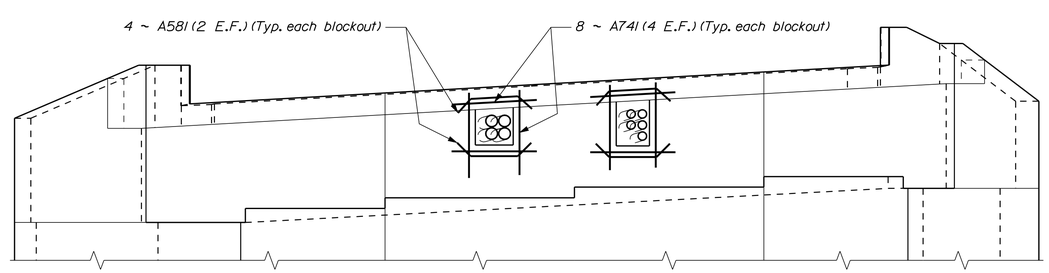

ABUTMENT NO. 1 BLOCKOUT REINFORCING ELEVATION

LEGEND

N.F. = Near Face
F.F. = Far Face
E.F. = Each Face

STATE OF MAINE
DEPARTMENT OF TRANSPORTATION

AC-BH-1267(400)

WIN 12674.00

BRIDGE NO. 2506

BRIDGE PLANS

PROJ. MANAGER	N. Benoit	BY	DATE
DESIGN-DETAILED	D. Eaton	D. Damren	Dec. 2012
CHECKED-REVIEWED	E. Caswell	B. Nichols	Feb. 2013
DESIGN2-DETAILED2	------	------	------
DESIGN3-DETAILED3	------	------	------
REVISIONS 1	------	------	------
REVISIONS 2	------	------	------
REVISIONS 3	------	------	------
REVISIONS 4	------	------	------
FIELD CHANGES	------	------	------

SIGNATURE

P.E. NUMBER

DATE

MAINE KENNEBEC BRIDGE
KENNEBEC RIVER
RICHMOND, SAGADAHOC CTY. DRESDEN, LINCOLN CTY.

ABUTMENT NO. 1 REINFORCING

SHEET NUMBER

93

OF 238

Filename: ...\093_Abutment_No. 1 Breastwall Reinforcing.dgn Design: BRIDGE Username: dana.damren Date:3/27/2013

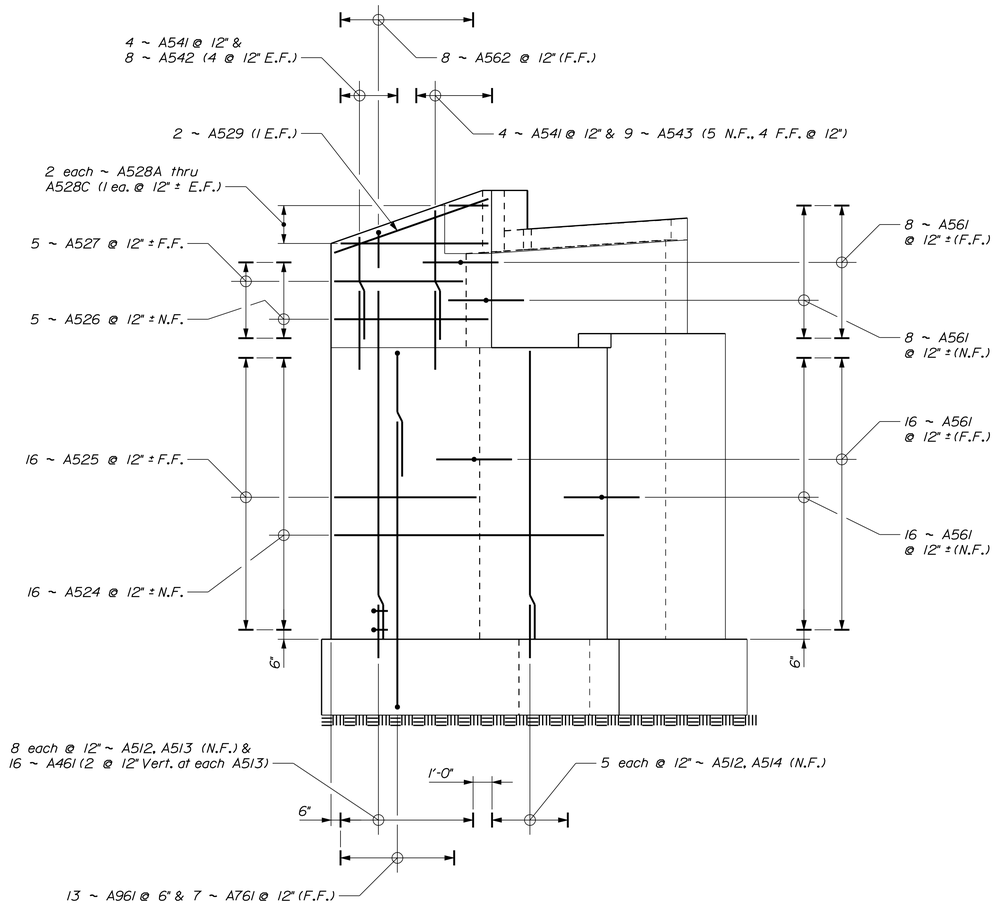

ABUTMENT NO. 1 DOWNSTREAM WINGWALL REINFORCING ELEVATION

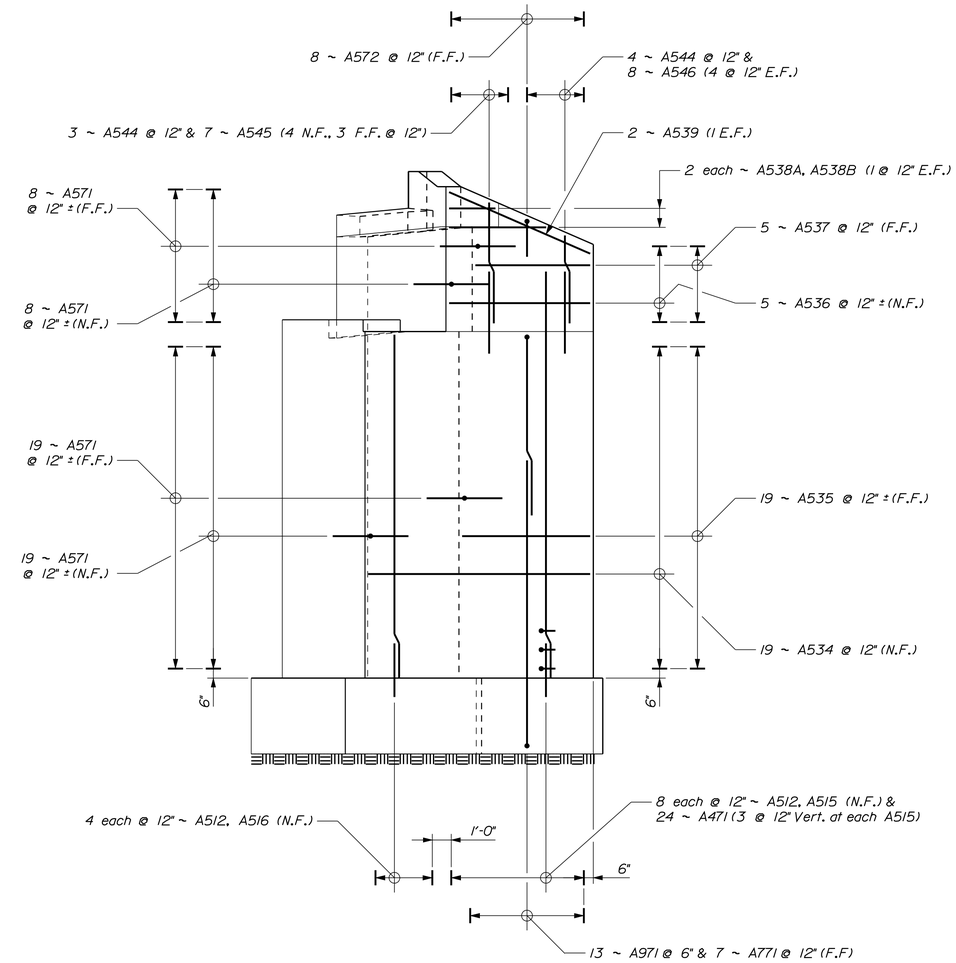

ABUTMENT NO. 1 UPSTREAM WINGWALL REINFORCING ELEVATION

LEGEND

N.F. = Near Face
F.F. = Far Face
E.F. = Each Face

STATE OF MAINE
DEPARTMENT OF TRANSPORTATION

AC-BH-1267(400)

WIN 12674.00

BRIDGE NO. 2506

BRIDGE PLANS

PROJ. MANAGER	N. Benoit		
DESIGN-DETAILED	D. Eaton	D. Damren	Dec. 2012
CHECKED-REVIEWED	E. Caswell	B. Nichols	Feb. 2013
DESIGN2-DETAILED2	------	------	------
DESIGN3-DETAILED3	------	------	------
REVISIONS 1	------	------	------
REVISIONS 2	------	------	------
REVISIONS 3	------	------	------
REVISIONS 4	------	------	------
FIELD CHANGES	------	------	------

SIGNATURE

P.E. NUMBER

DATE

MAINE KENNEBEC BRIDGE
KENNEBEC RIVER
RICHMOND, SAGADAHOC CTY. DRESDEN, LINCOLN CTY.

ABUT. NO. 1 WINGWALL REINF.

SHEET NUMBER

94

OF 238

Filename: ...\094_Abutment_No. 1 Wingwall Reinforcing.dgn Division: BRIDGE Username: dana.damren Date:3/27/2013

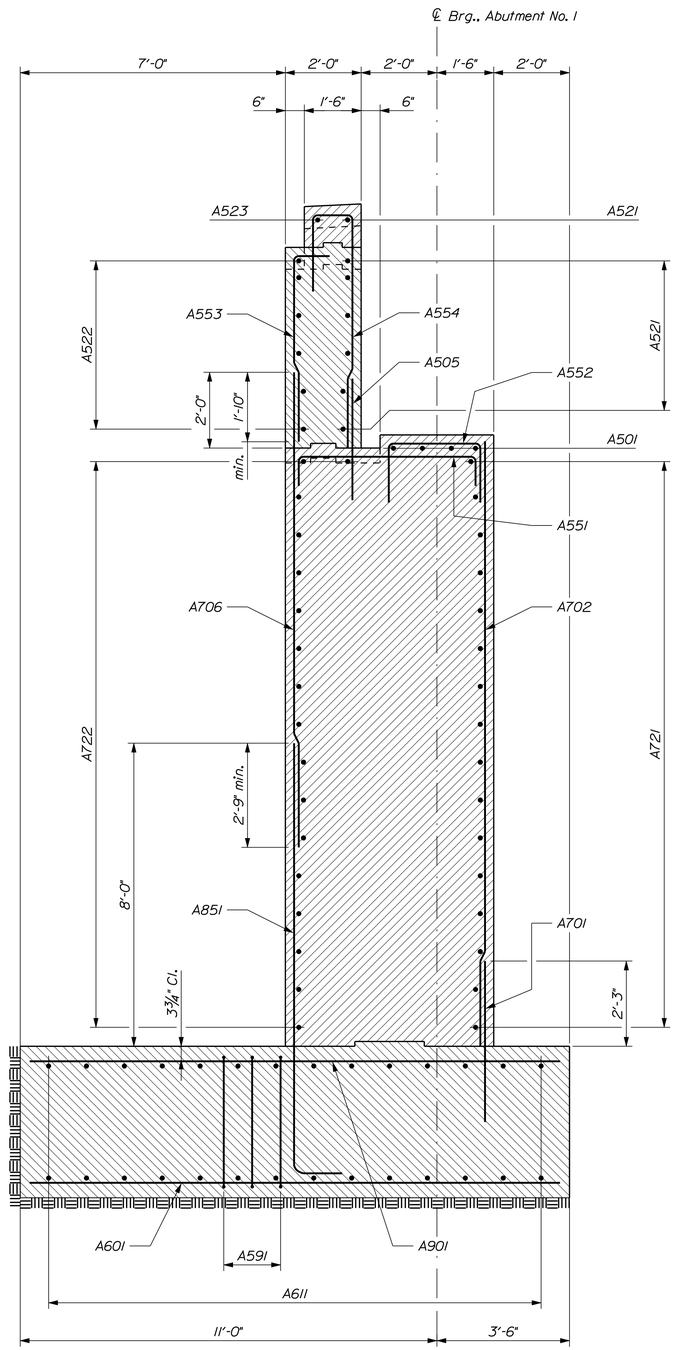

ABUTMENT NO. 1 DOWNSTREAM BREASTWALL SECTION

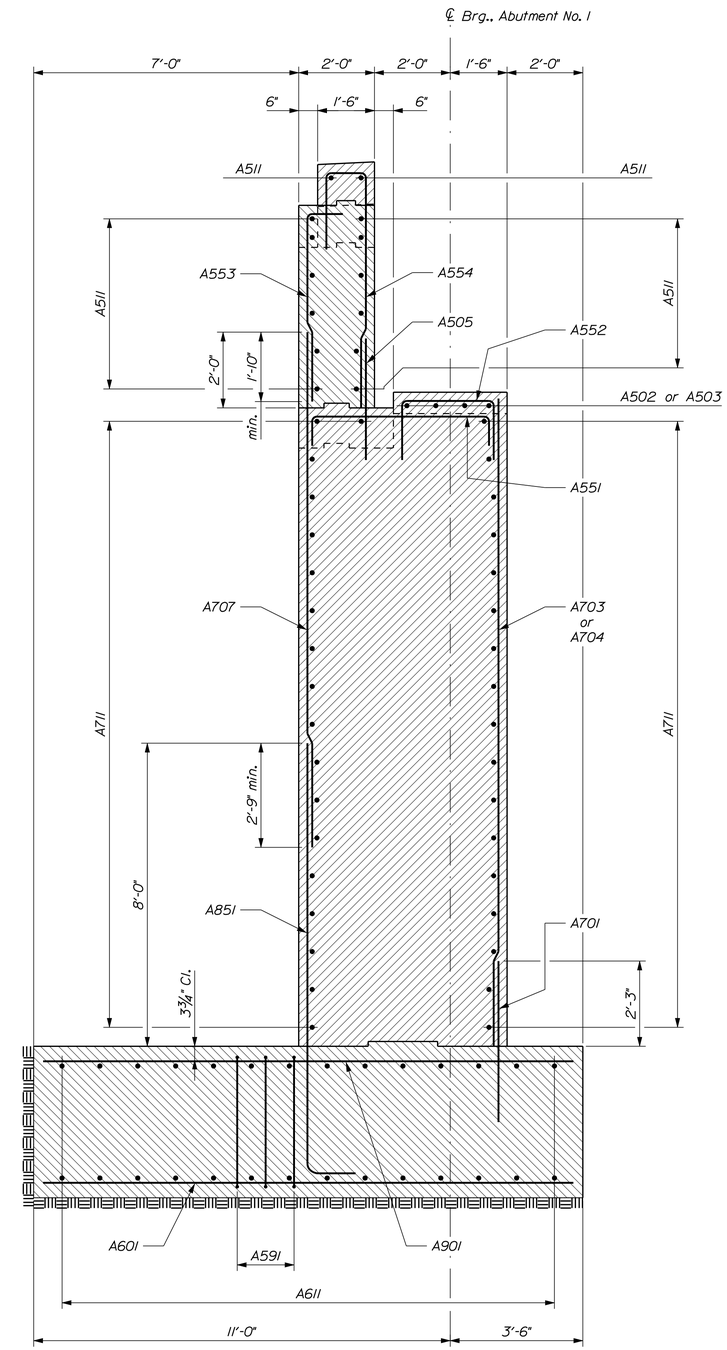

ABUTMENT NO. 1 CENTER BREASTWALL SECTION

STATE OF MAINE
DEPARTMENT OF TRANSPORTATION

AC-BH-1267(400)

WIN 12674.00

BRIDGE NO. 2506

BRIDGE PLANS

		BY	DATE
PROJ. MANAGER	N. Benoit		
DESIGN-DETAILED	D. Eaton	D. Domren	Dec. 2012
CHECKED-REVIEWED	E. Caswell	B. Nichols	Feb. 2013
DESIGN2-DETAILED2	------	------	------
DESIGN3-DETAILED3	------	------	------
REVISIONS 1	------	------	------
REVISIONS 2	------	------	------
REVISIONS 3	------	------	------
REVISIONS 4	------	------	------
FIELD CHANGES	------	------	------

SIGNATURE

P.E. NUMBER

DATE

MAINE KENNEBEC BRIDGE
KENNEBEC RIVER
RICHMOND, SAGADAHOC CTY. DRESDEN, LINCOLN CTY.

ABUTMENT NO. 1 SECTIONS

SHEET NUMBER

95

OF 238

Filename: ...\095_Abutment_No. 1 Sections.dgn Division: BRIDGE Username: dana.domren Date:3/27/2013

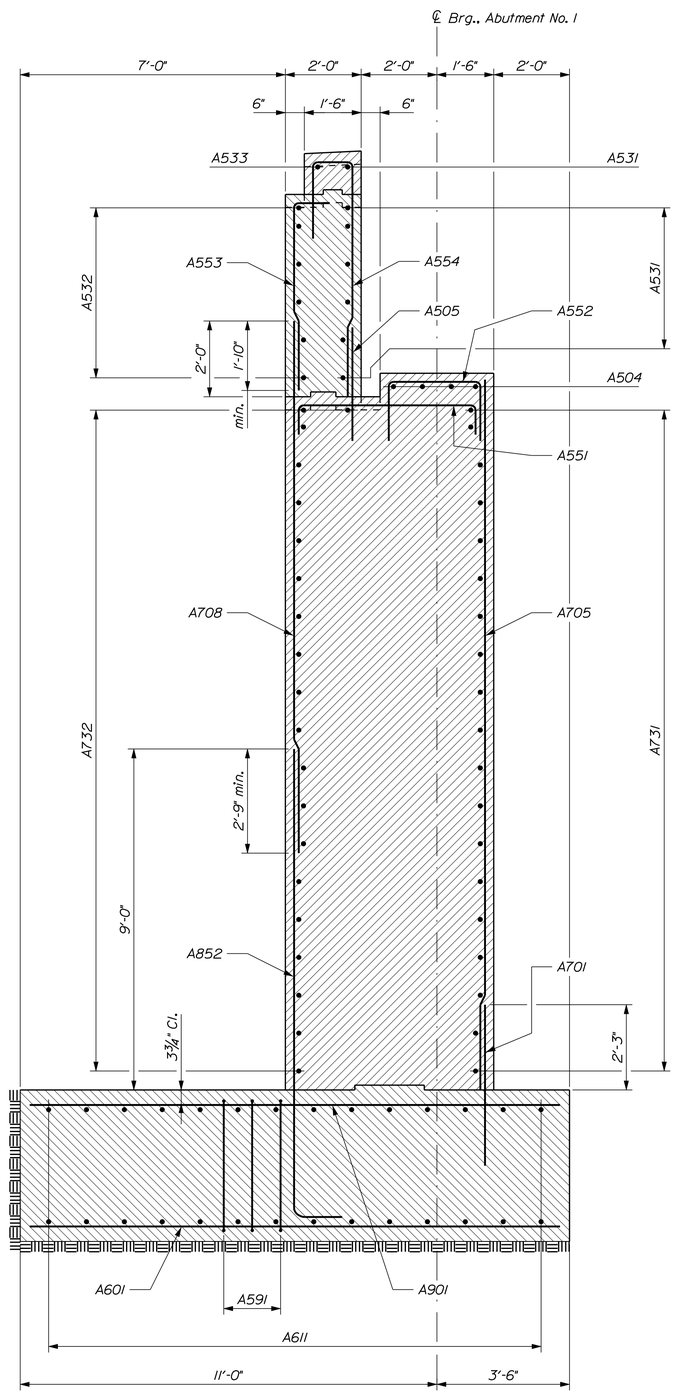

ABUTMENT NO. 1 UPSTREAM BREASTWALL SECTION

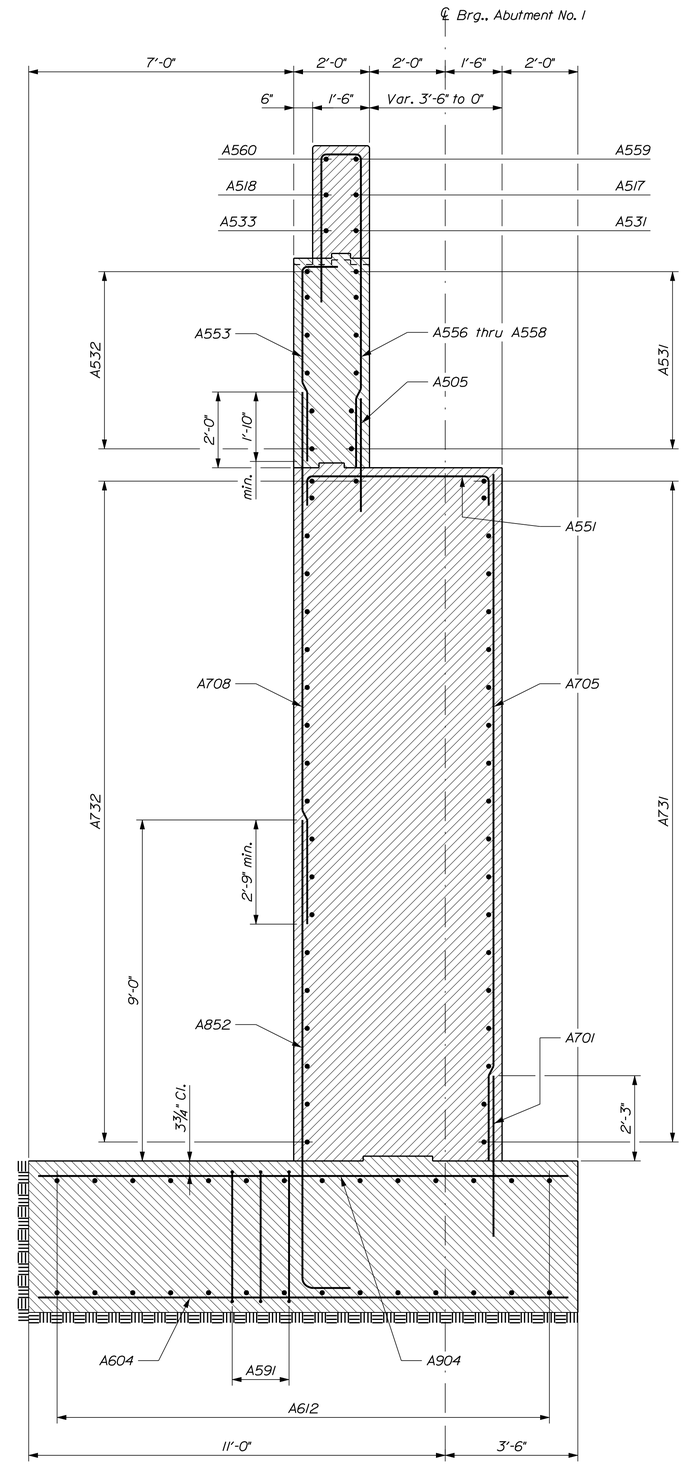

ABUTMENT NO. 1 SECTION THRU UPSTREAM PARAPET

STATE OF MAINE
DEPARTMENT OF TRANSPORTATION

AC-BH-1267(400)

WIN 12674.00

BRIDGE NO. 2506

BRIDGE PLANS

		BY	DATE
PROJ. MANAGER	N. Benoit		
DESIGN-DETAILED	D. Eaton	D. Domren	Dec. 2012
CHECKED-REVIEWED	E. Coswell	B. Nichols	Feb. 2013
DESIGN2-DETAILED2	------	------	------
DESIGN3-DETAILED3	------	------	------
REVISIONS 1	------	------	------
REVISIONS 2	------	------	------
REVISIONS 3	------	------	------
REVISIONS 4	------	------	------
FIELD CHANGES	------	------	------

SIGNATURE

P.E. NUMBER

DATE

MAINE KENNEBEC BRIDGE
KENNEBEC RIVER
RICHMOND, SAGADAHOC CTY. DRESDEN, LINCOLN CTY.

ABUTMENT NO. 1 SECTIONS

SHEET NUMBER

96

OF 238

Filename: ...\096_Abutment_No. 1 Sections.dgn Division: BRIDGE Username: dana.domren Date:3/27/2013

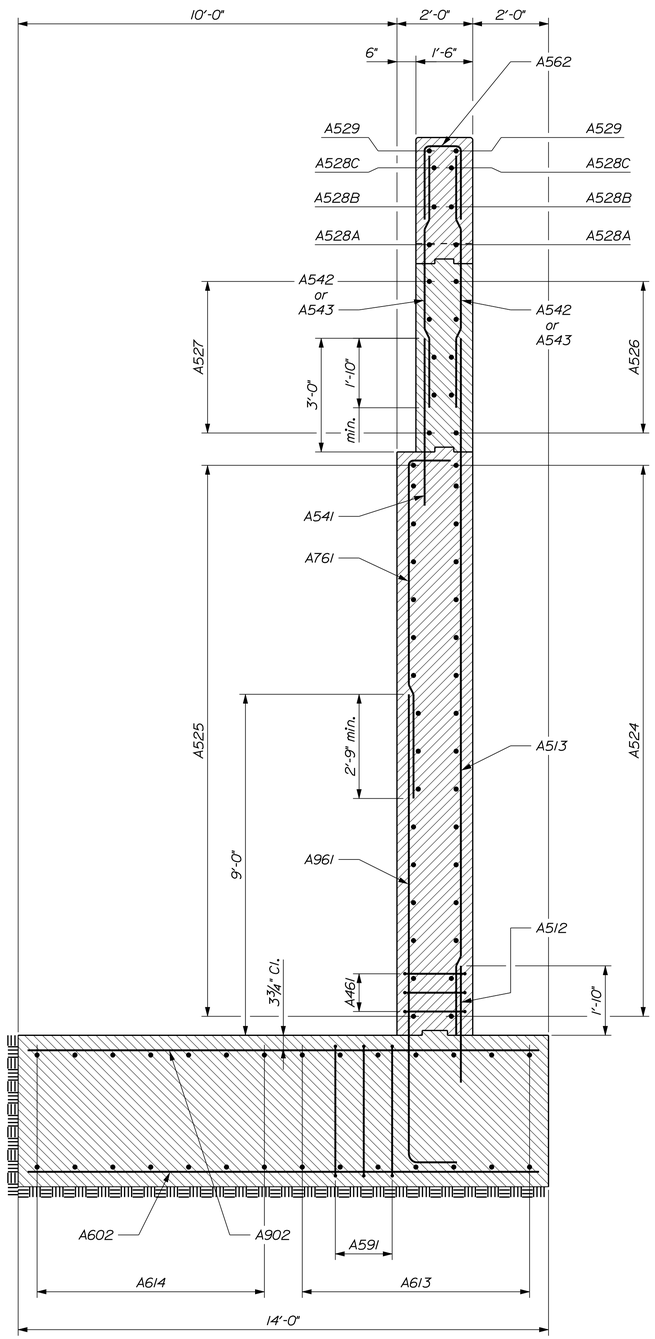

ABUTMENT NO. 1 DOWNSTREAM WINGWALL SECTION

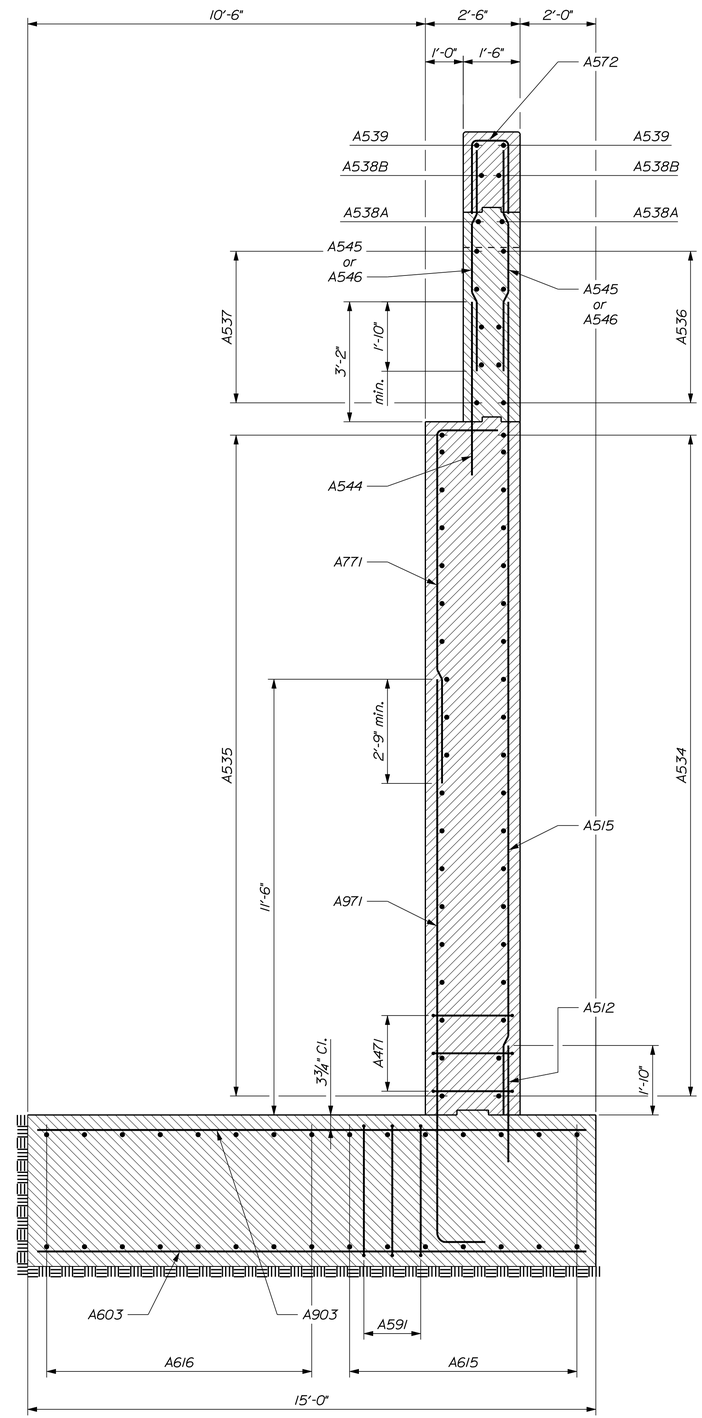

ABUTMENT NO. 1 UPSTREAM WINGWALL SECTION

STATE OF MAINE
DEPARTMENT OF TRANSPORTATION

AC-BH-1267(400)

WIN 12674.00

BRIDGE NO. 2506

BRIDGE PLANS

PROJ. MANAGER	N. Benoit	BY	DATE
DESIGN-DETAILED	D. Eaton	D. Damren	Dec. 2012
CHECKED-REVIEWED	E. Caswell	B. Nichols	Feb. 2013
DESIGN2-DETAILED2	------	------	------
DESIGN3-DETAILED3	------	------	------
REVISIONS 1	------	------	------
REVISIONS 2	------	------	------
REVISIONS 3	------	------	------
REVISIONS 4	------	------	------
FIELD CHANGES	------	------	------

SIGNATURE

P.E. NUMBER

DATE

MAINE KENNEBEC BRIDGE
KENNEBEC RIVER
RICHMOND, SAGADAHOC CTY. DRESDEN, LINCOLN CTY.

ABUTMENT NO. 1 SECTIONS

SHEET NUMBER

97

OF 238

Filename: ...\097_Abutment_No. 1 Sections.dgn Division: BRIDGE Username: dana.damren Date:3/27/2013

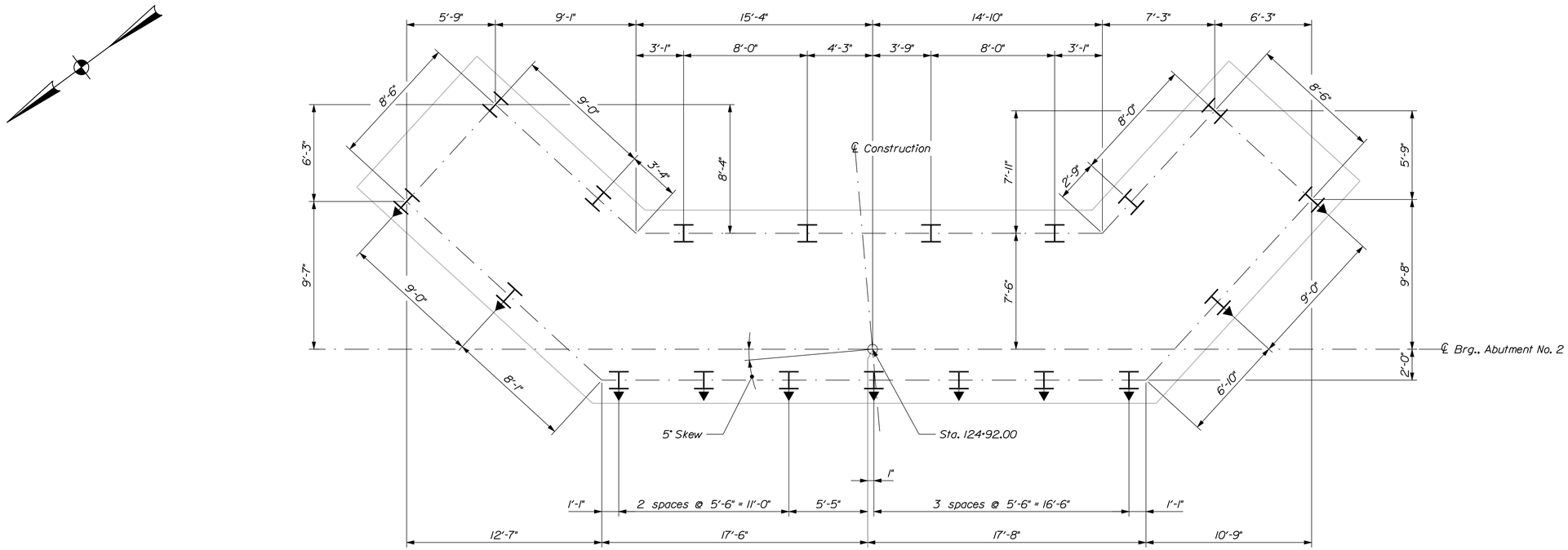

ABUTMENT NO. 2 PILE PLAN

Top of Pile EL. 25.50

Piles marked with arrows to be battered 3 in./ft

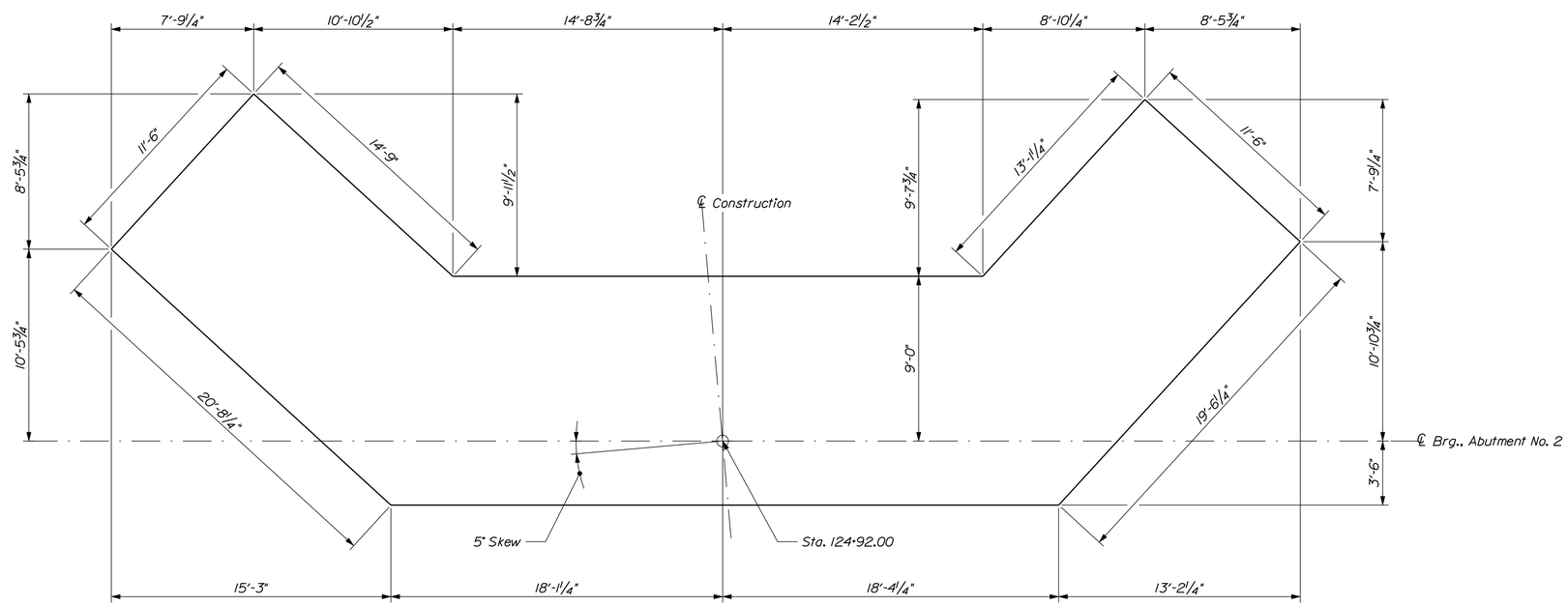

ABUTMENT NO. 2 FOOTING PLAN

STATE OF MAINE
DEPARTMENT OF TRANSPORTATION

AC-BH-1267(400)

WIN 12674.00

BRIDGE NO. 2506

BRIDGE PLANS

PROJ. MANAGER	N. Benoit	BY	DATE
DESIGN-DETAILED	J. Velleux	D. Damren	Oct. 2012
CHECKED-REVIEWED	E. Caswell	B. Nichols	Feb. 2013
DESIGN2-DETAILED2	------	------	------
DESIGN3-DETAILED3	------	------	------
REVISIONS 1	------	------	------
REVISIONS 2	------	------	------
REVISIONS 3	------	------	------
REVISIONS 4	------	------	------
FIELD CHANGES	------	------	------

SIGNATURE

P.E. NUMBER

DATE

MAINE KENNEBEC BRIDGE
KENNEBEC RIVER
RICHMOND, SAGADAHOC CTY. DRESDEN, LINCOLN CTY.

ABUT. NO. 2 PILE & FTG. PLAN

SHEET NUMBER

98

OF 238

Filename: ...\098_Abutment_No.2 Pile & Footing Plan.dgn Division: BRIDGE Username: dana.damren Date:3/27/2013

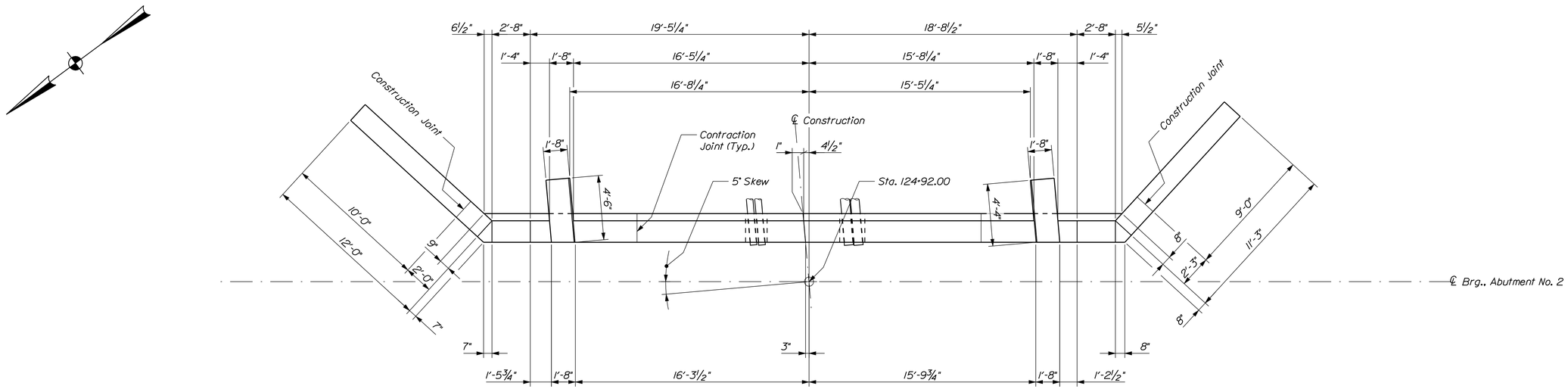

ABUTMENT NO. 2 BACKWALL PLAN

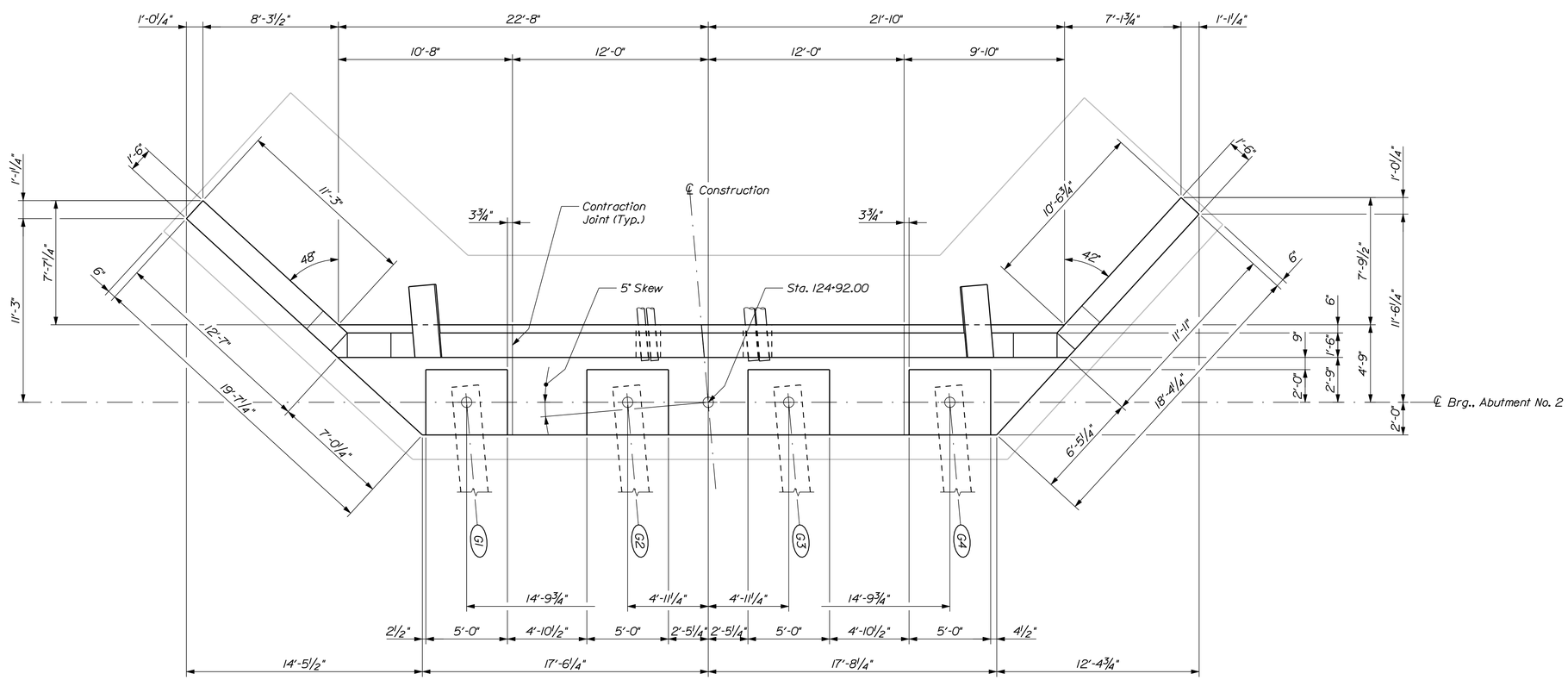

ABUTMENT NO. 2 PLAN

STATE OF MAINE
DEPARTMENT OF TRANSPORTATION

AC-BH-1267(400)

WIN 12674.00

BRIDGE NO. 2506

BRIDGE PLANS

PROJ. MANAGER	N. Benoit	BY	DATE
DESIGN-DETAILED	J. Velluex	D. Damren	Oct. 2012
CHECKED-REVIEWED	E. Caswell	B. Nichols	Feb. 2013
DESIGN2-DETAILED2	------	------	------
DESIGN3-DETAILED3	------	------	------
REVISIONS 1	------	------	------
REVISIONS 2	------	------	------
REVISIONS 3	------	------	------
REVISIONS 4	------	------	------
FIELD CHANGES	------	------	------

SIGNATURE

P.E. NUMBER

DATE

MAINE KENNEBEC BRIDGE
KENNEBEC RIVER
RICHMOND, SAGADAHOC CTY. DRESDEN, LINCOLN CTY.

ABUTMENT NO. 2 PLAN

SHEET NUMBER

99

OF 238

Filename: ...\099_Abutment_No. 2 Plan.dgn Division: BRIDGE Username: dana.damren Date:3/27/2013

Note: Backwall grades lowered 0.02' below F.G. to account for 1/4" depression of Expansion Device

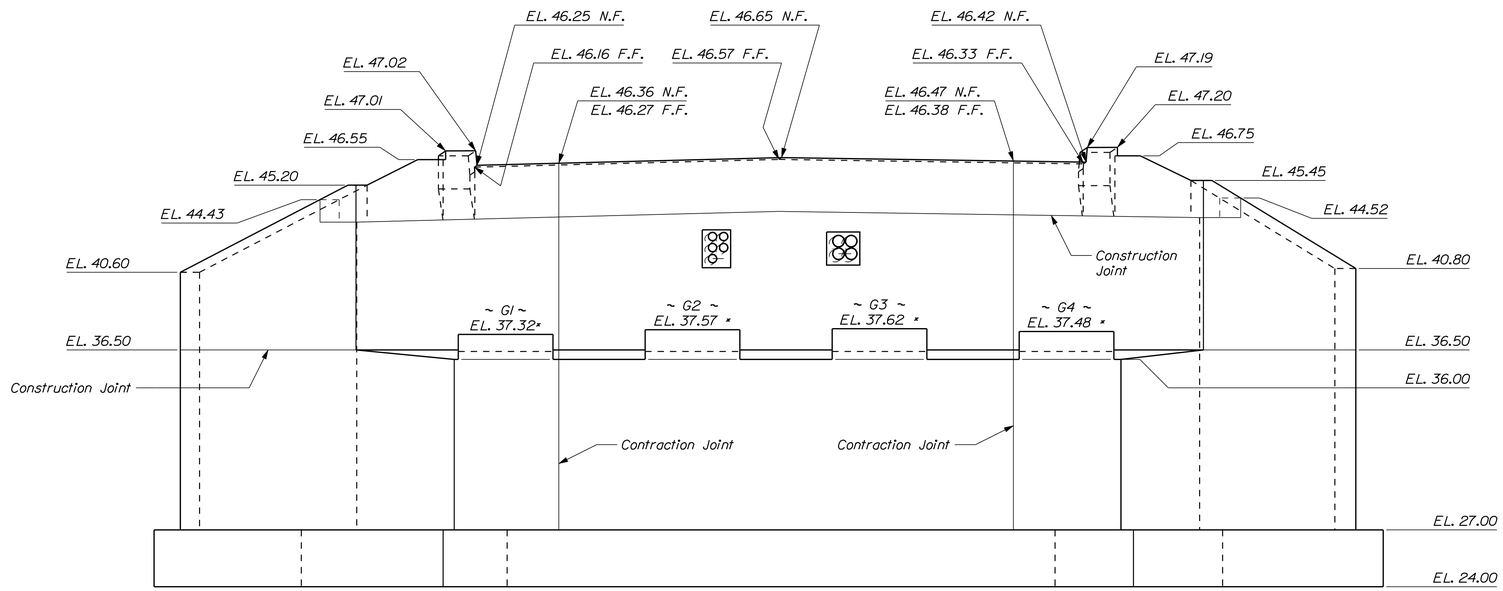

ABUTMENT NO. 2 FRONT ELEVATION

* Approximate elevations. See "Abutment Notes"

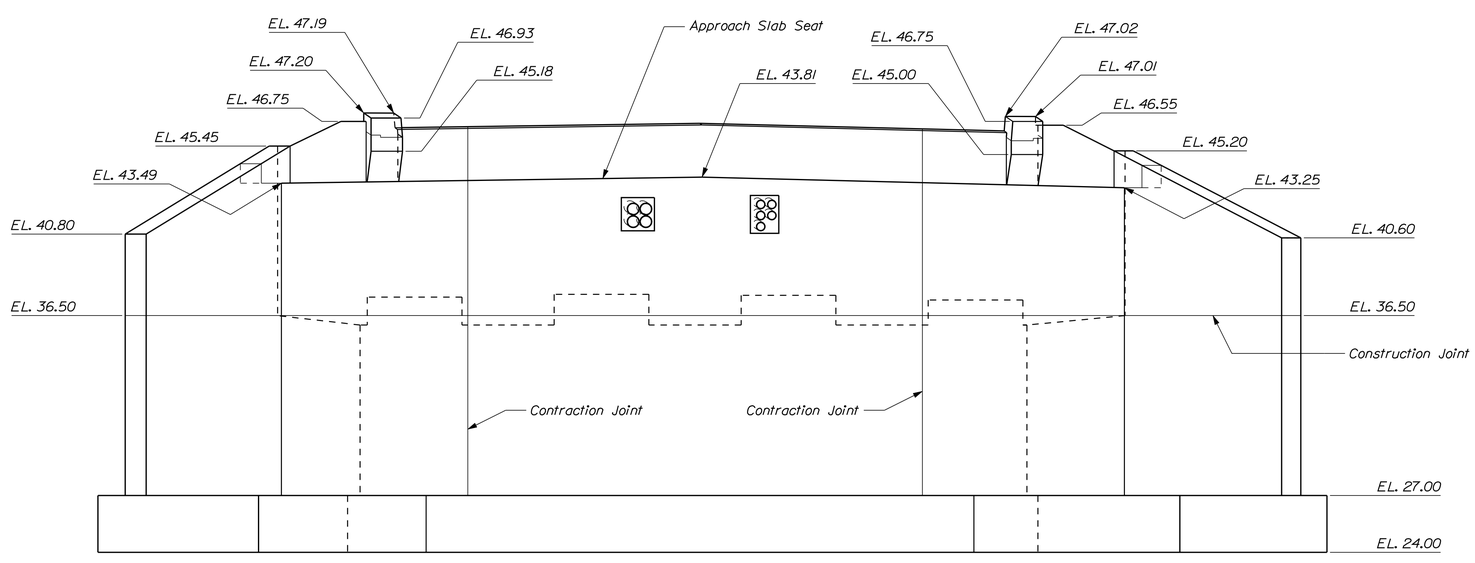

ABUTMENT NO. 2 REAR ELEVATION

STATE OF MAINE
DEPARTMENT OF TRANSPORTATION

AC-BH-1267(400)

WIN 12674.00

BRIDGE NO. 2506

BRIDGE PLANS

		BY	DATE
PROJ. MANAGER	N. Benoit		
DESIGN-DETAILED	J. Velluex	D. Domren	Oct. 2012
CHECKED-REVIEWED	E. Caswell	B. Nichols	Feb. 2013
DESIGN2-DETAILED2	------	------	------
DESIGN3-DETAILED3	------	------	------
REVISIONS 1	------	------	------
REVISIONS 2	------	------	------
REVISIONS 3	------	------	------
REVISIONS 4	------	------	------
FIELD CHANGES	------	------	------

SIGNATURE

P.E. NUMBER

DATE

MAINE KENNEBEC BRIDGE
KENNEBEC RIVER
RICHMOND, SAGADAHOC CTY. DRESDEN, LINCOLN CTY.

ABUTMENT NO. 2 ELEVATIONS

SHEET NUMBER

100

OF 238

Filename: ...\100_Abutment_No. 2 Elevations.dgn Division: BRIDGE Username: dana.domren Date:3/27/2013

Filename: ...\101_Abutment_No. 2 Footing Reinforcing.dgn Division: BRIDGE Username: dana.damren Date:3/27/2013

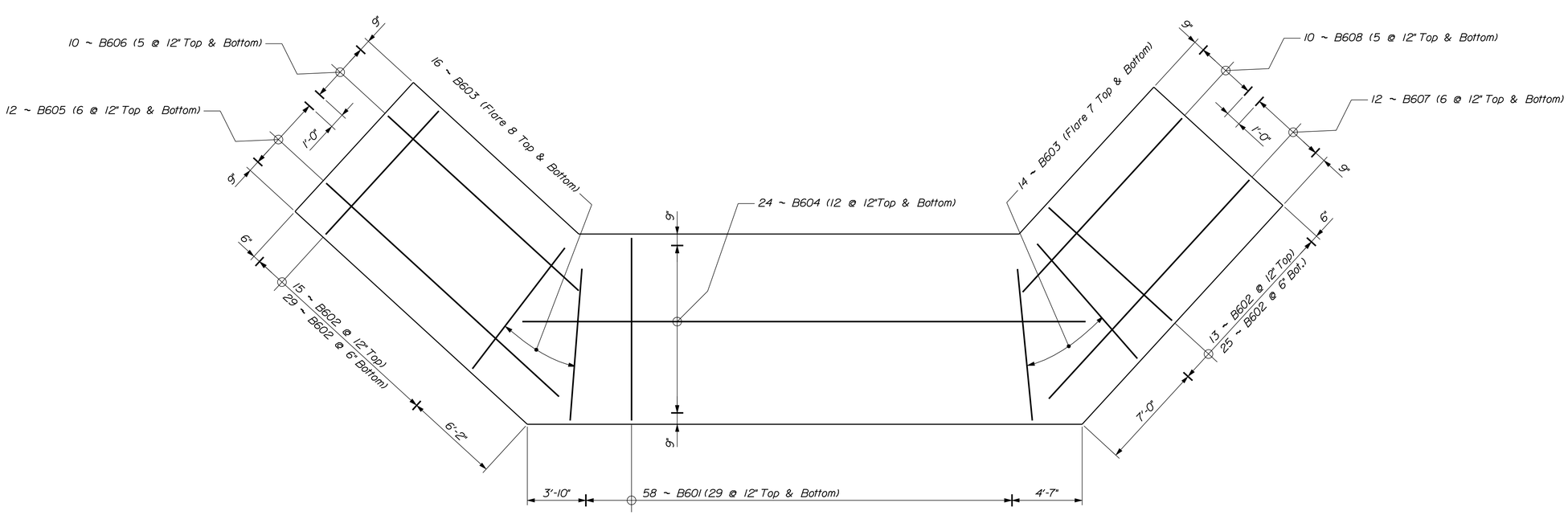

ABUTMENT NO. 2 FOOTING REINFORCING PLAN

Adjust bottom mat spacing to clear piles

		BY	DATE
PROJ. MANAGER	N. Benoit		
DESIGN-DETAILED	J. Velluex	D. Damren	Oct. 2012
CHECKED-REVIEWED	E. Caswell	B. Nichols	Feb. 2013
DESIGN2-DETAILED2	------	------	------
DESIGN3-DETAILED3	------	------	------
REVISIONS 1	------		
REVISIONS 2	------		
REVISIONS 3	------		
REVISIONS 4	------		
FIELD CHANGES	------		

SIGNATURE

P.E. NUMBER

DATE

STATE OF MAINE
DEPARTMENT OF TRANSPORTATION

AC-BH-1267(400)

WIN 12674.00

BRIDGE NO. 2506

BRIDGE PLANS

MAINE KENNEBEC BRIDGE
KENNEBEC RIVER
RICHMOND, SAGADAHOC CTY. DRESDEN, LINCOLN CTY.

ABUT. NO. 2 FOOTING REINF.

SHEET NUMBER

101

OF 238

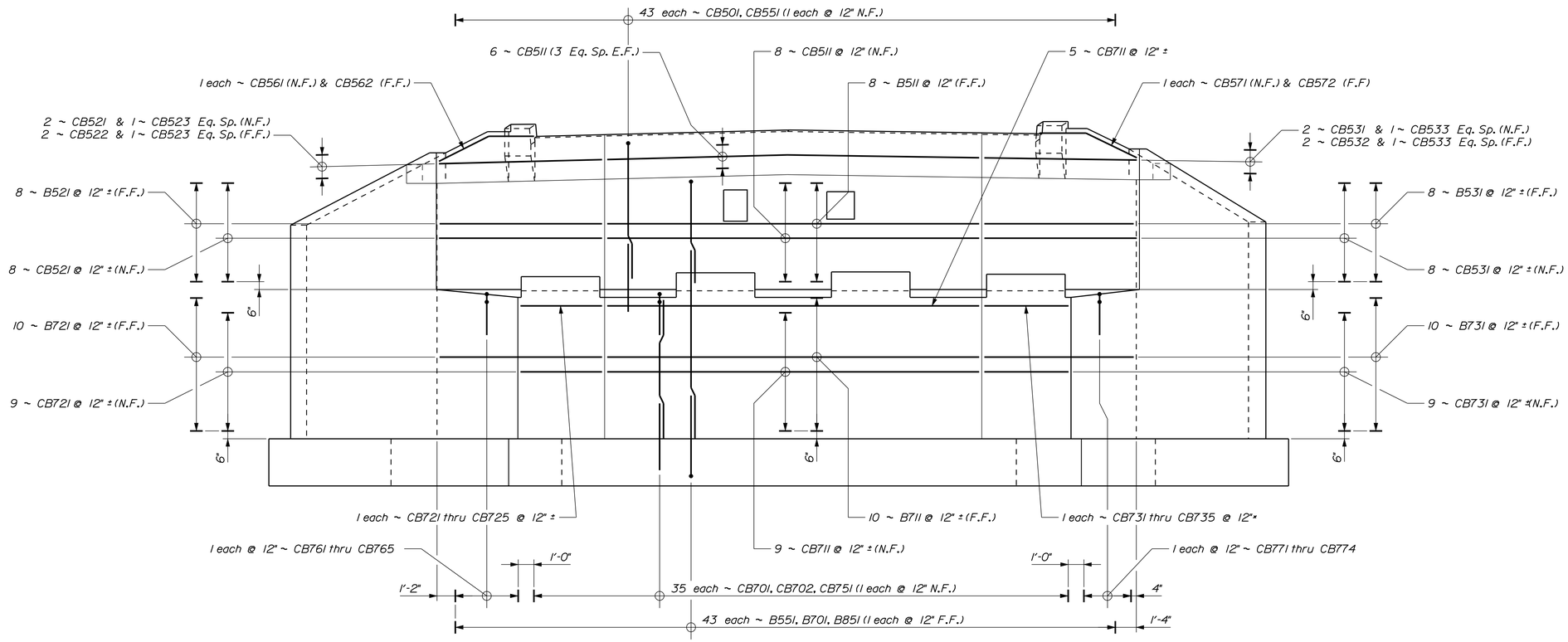

ABUTMENT NO. 2 REINFORCING ELEVATION

For reinforcing in cantilevered Transition Barrier bases, see "Abutment No. 2 Concrete Transition Barriers"

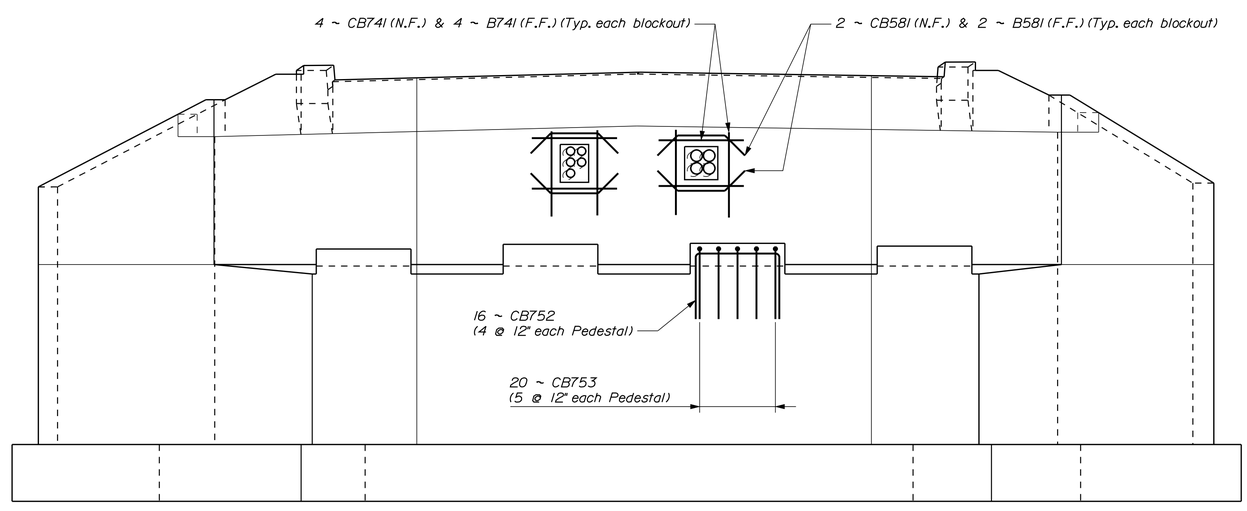

ABUTMENT NO. 2 PEDESTAL & BLOCKOUT REINFORCING ELEVATION

LEGEND

N.F. = Near Face
F.F. = Far Face
E.F. = Each Face

STATE OF MAINE
DEPARTMENT OF TRANSPORTATION

AC-BH-1267(400)

WIN 12674.00

BRIDGE NO. 2506

BRIDGE PLANS

		BY	DATE
PROJ. MANAGER	N. Benoit		
DESIGN-DETAILED	J. Velluex	D. Domren	Oct. 2012
CHECKED-REVIEWED	E. Caswell	B. Nichols	Feb. 2013
DESIGN2-DETAILED2	------	------	------
DESIGN3-DETAILED3	------	------	------
REVISIONS: 1	------	------	------
REVISIONS: 2	------	------	------
REVISIONS: 3	------	------	------
REVISIONS: 4	------	------	------
FIELD CHANGES	------	------	------

SIGNATURE

P.E. NUMBER

DATE

MAINE KENNEBEC BRIDGE
KENNEBEC RIVER
RICHMOND, SAGADAHOC CTY. DRESDEN, LINCOLN CTY.

ABUTMENT NO. 2 REINFORCING

SHEET NUMBER

102

OF 238

Filename: ...\102_Abutment_No. 2 Breastwall Reinforcing.dgn Division: BRIDGE Username: dona.domren Date:3/27/2013

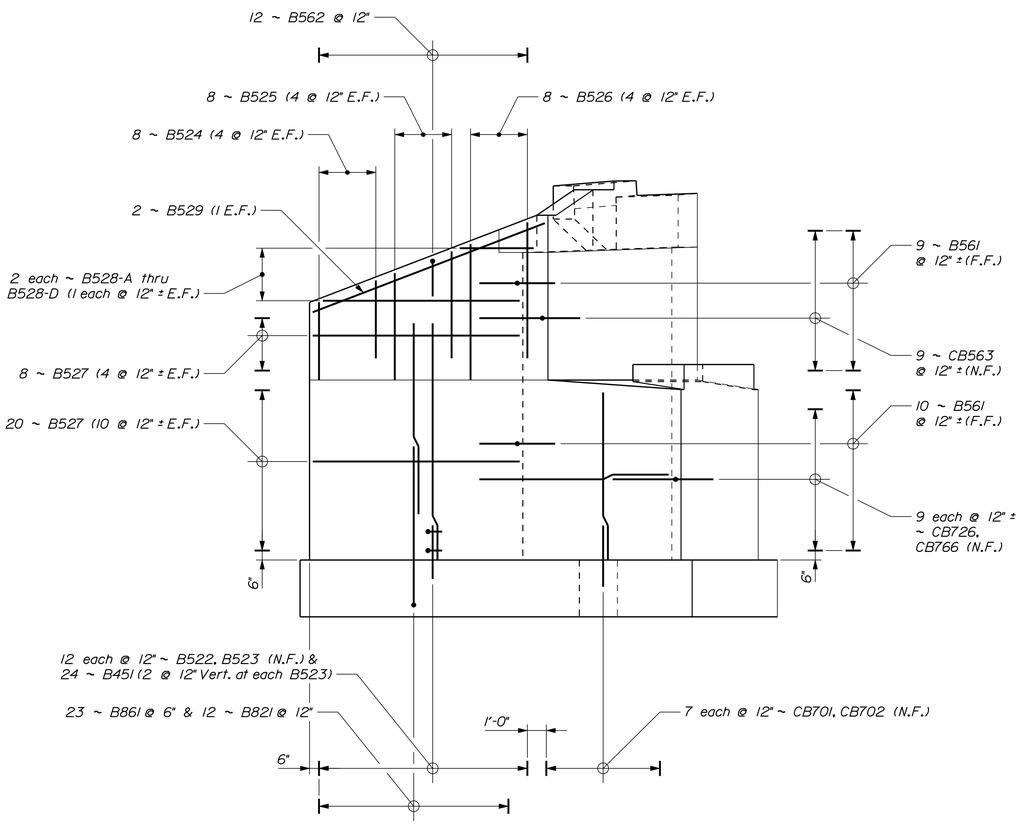

ABUTMENT NO. 2 UPSTREAM WINGWALL REINFORCING ELEVATION

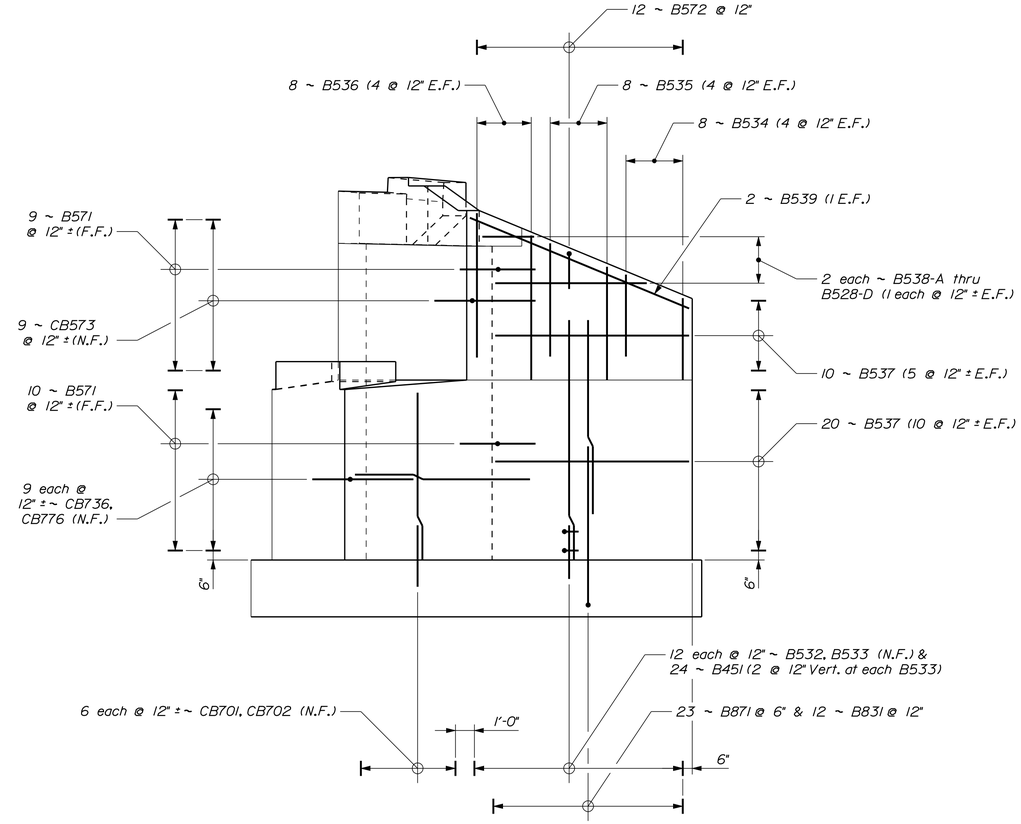

ABUTMENT NO. 2 DOWNSTREAM WINGWALL REINFORCING ELEVATION

LEGEND

N.F. = Near Face
F.F. = Far Face
E.F. = Each Face

STATE OF MAINE
DEPARTMENT OF TRANSPORTATION

AC-BH-1267(400)

WIN 12674.00

BRIDGE NO. 2506

BRIDGE PLANS

		BY	DATE
PROJ. MANAGER	N. Benoit		
DESIGN-DETAILED	J. Velluex	D. Damren	Oct. 2012
CHECKED-REVIEWED	E. Caswell	B. Nichols	Feb. 2013
DESIGN2-DETAILED2	------	------	------
DESIGN3-DETAILED3	------	------	------
REVISIONS 1	------	------	------
REVISIONS 2	------	------	------
REVISIONS 3	------	------	------
REVISIONS 4	------	------	------
FIELD CHANGES	------	------	------

SIGNATURE

P.E. NUMBER

DATE

MAINE KENNEBEC BRIDGE
KENNEBEC RIVER
RICHMOND, SAGADAHOC CTY. DRESDEN, LINCOLN CTY.

ABUT. NO. 2 WINGWALL REINF.

SHEET NUMBER

103

OF 238

Filename: ...\103_Abutment_No. 2 Wingwall Reinforcing.dgn Division: BRIDGE Username: dona.damren Date:3/27/2013

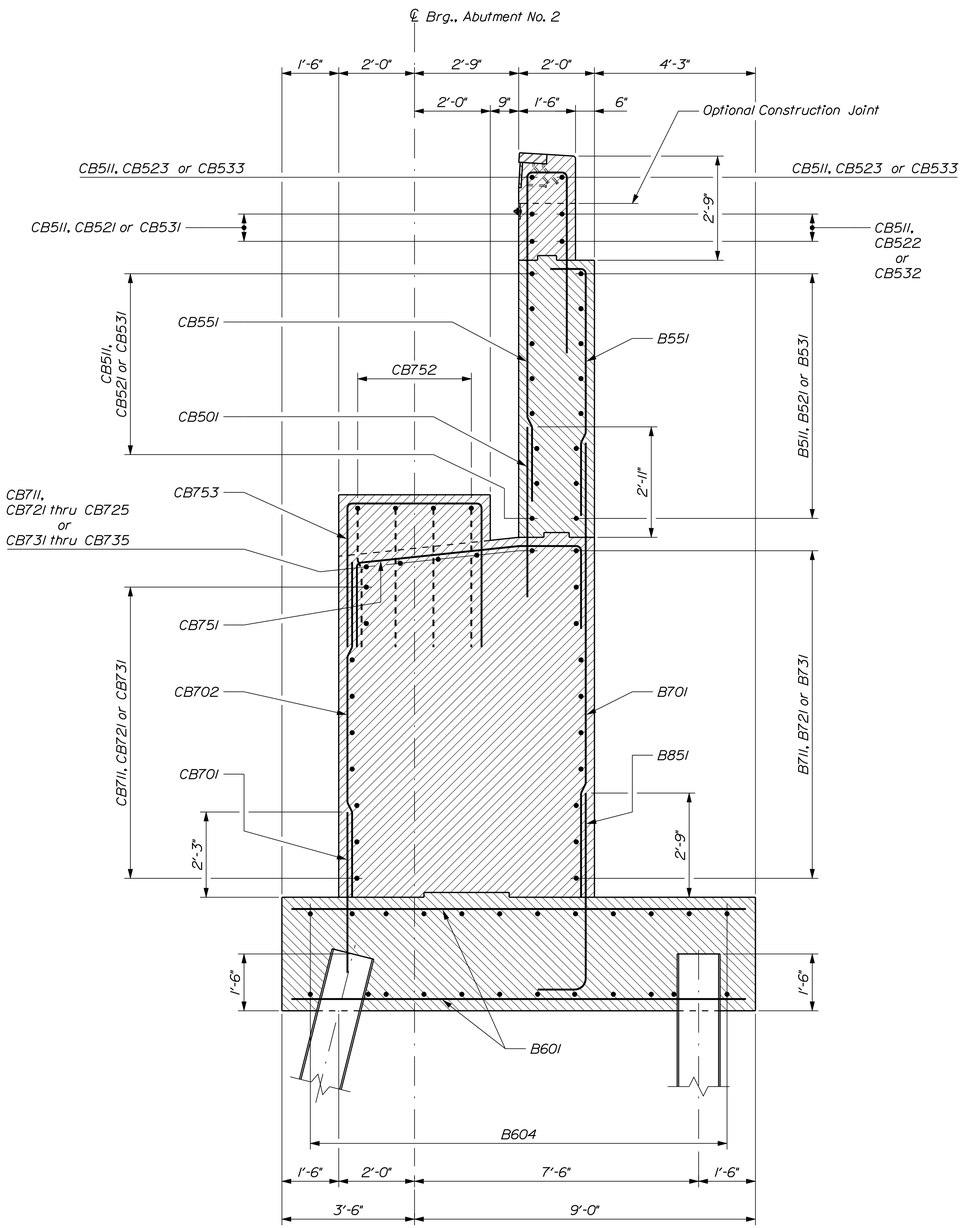

ABUTMENT NO. 2 BREASTWALL SECTION

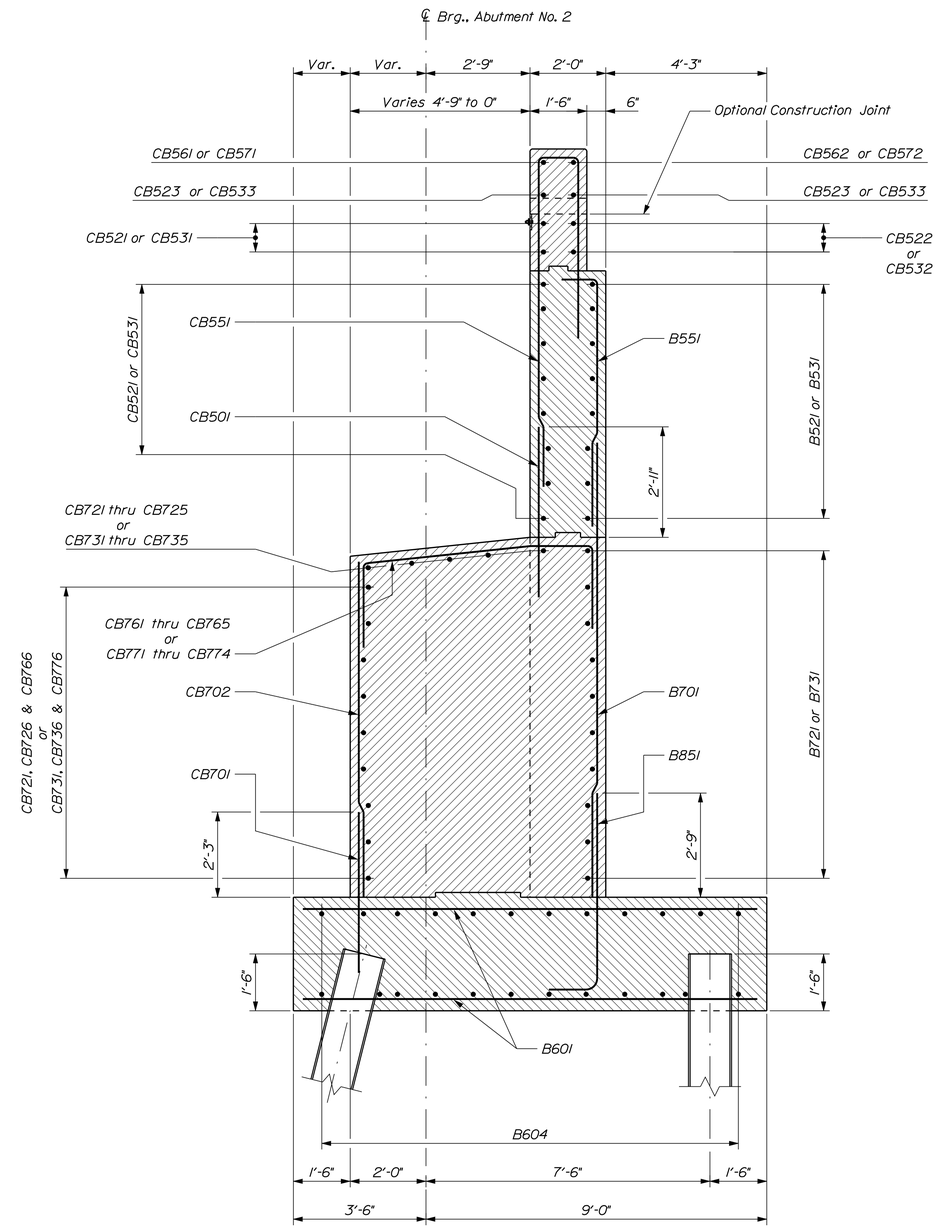

ABUTMENT NO. 2 SECTION THRU PARAPET

STATE OF MAINE
DEPARTMENT OF TRANSPORTATION

AC-BH-1267(400)

WIN 12674.00

BRIDGE NO. 2506

BRIDGE PLANS

		BY	DATE
PROJ. MANAGER	N. Benoit		
DESIGN-DETAILED	J. Velluex	D. Domren	Oct. 2012
CHECKED-REVIEWED	E. Caswell	B. Nichols	Feb. 2013
DESIGN2-DETAILED2	------	------	------
DESIGN3-DETAILED3	------	------	------
REVISIONS 1	------	------	------
REVISIONS 2	------	------	------
REVISIONS 3	------	------	------
REVISIONS 4	------	------	------
FIELD CHANGES	------	------	------

SIGNATURE

P.E. NUMBER

DATE

MAINE KENNEBEC BRIDGE
KENNEBEC RIVER
RICHMOND, SAGADAHOC CTY. DRESDEN, LINCOLN CTY.

ABUTMENT NO. 2 SECTIONS

SHEET NUMBER

104

OF 238

Filename: ...\104_Abutment_No. 2 Sections.dgn Division: BRIDGE Username: dana.domren Date:3/27/2013

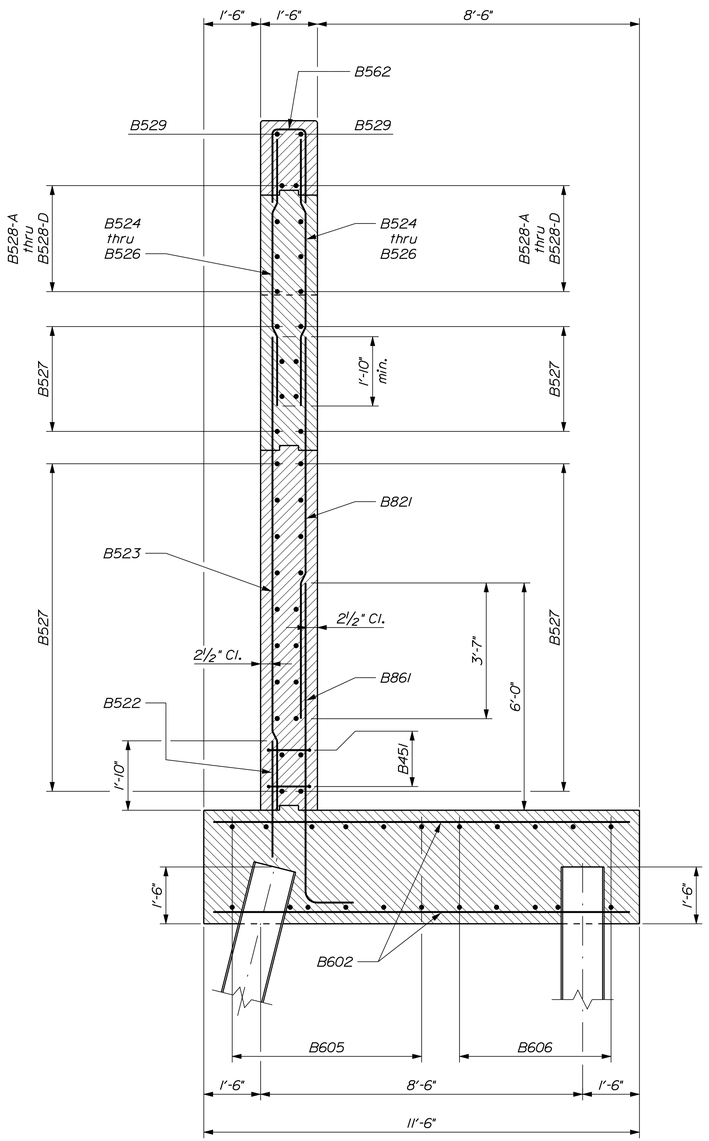

ABUTMENT NO. 2 UPSTREAM WINGWALL SECTION

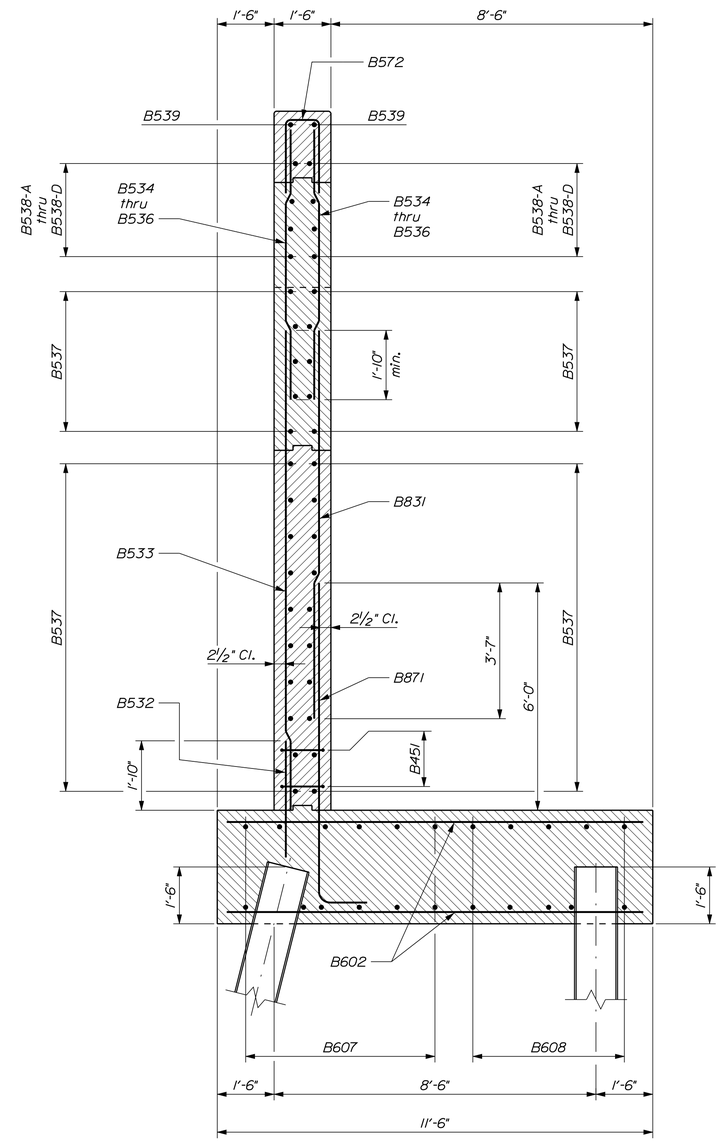

ABUTMENT NO. 2 DOWNSTREAM WINGWALL SECTION

STATE OF MAINE
DEPARTMENT OF TRANSPORTATION

AC-BH-1267(400)

WIN 12674.00

BRIDGE NO. 2506

BRIDGE PLANS

		BY	DATE
PROJ. MANAGER	N. Benoit		
DESIGN-DETAILED	J. Velluex	D. Domren	Oct. 2012
CHECKED-REVIEWED	E. Caswell	B. Nichols	Feb. 2013
DESIGN2-DETAILED2	------	------	------
DESIGN3-DETAILED3	------	------	------
REVISIONS 1	------	------	------
REVISIONS 2	------	------	------
REVISIONS 3	------	------	------
REVISIONS 4	------	------	------
FIELD CHANGES	------	------	------

SIGNATURE

P.E. NUMBER

DATE

MAINE KENNEBEC BRIDGE
KENNEBEC RIVER
RICHMOND, SAGADAHOC CTY. DRESDEN, LINCOLN CTY.

ABUTMENT NO. 2 SECTIONS

SHEET NUMBER

105

OF 238

Filename: ...\105_Abutment_No. 2 Sections.dgn Division: BRIDGE Username: dana.domren Date:3/27/2013

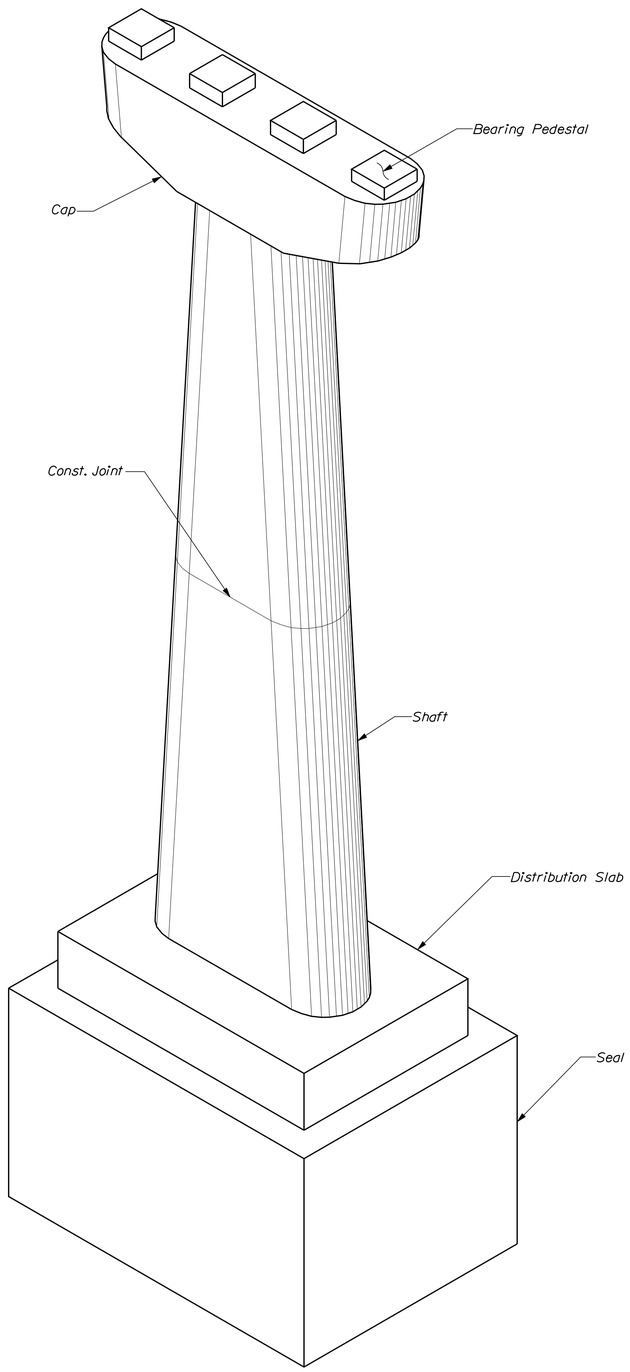

PIER ISOMETRIC VIEW
Pier No. 3 Shown

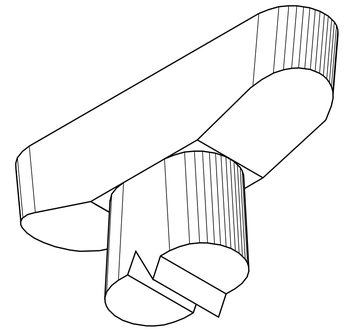

PIER ISOMETRIC VIEW
Upward view of cap

PIER NOTES

1. The maximum factored applied footing pressures are:
   Pier 1 - 19 ksf (Strength I)
   Pier 2 - 24 ksf (Strength I)
   Pier 3 - 21 ksf (Strength I)
   Pier 5 - 20 ksf (Strength III)
   Pier 6 - 19 ksf (Strength I)
2. Reinforcing steel shall have a minimum concrete cover of 3 inches unless otherwise noted.

3. The Bridge Seat elevations shown are based on bearing heights given in the "Disc Bearing Design table" on Sheet No. 142. Adjustments to the elevations shall be made, if necessary, according to the provisions stated there.

PILE NOTES

1. The maximum factored pile load is 399 kips (Strength I)

2. H-pile material shall be ASTM A 572, Grade 50.

3. Estimate of piles required:

   Pier No. 4: 42 ~HP 14x117 @ 53 feet

4. The order lengths of the piles shall reflect an additional 5 feet of length for each test pile to accommodate dynamic pile testing equipment.

5. All piles shall be equipped with a pile tip in accordance with Standard Specifications Section 501.10, Prefabricated Pile Tips.

6. Piles marked with an arrow shall be battered 1.2 in./ft in the direction of the arrow.

7. The Contractor shall perform and submit for approval two wave equation analyses for a plumb and battered pile. The maximum allowable driving stress is 0.90 times Fy. The submittal analyses shall include the proposed stopping criteria based on the wave equation analysis and the proposed driving system. The stopping criteria shall include the blows per inch and the number of 1-in. intervals at which pile installation may be terminated. The cost of performing the wave equation analysis will be considered incidental to Item No. 501.92, Pile Driving Equipment Mobilization.

8. The Contractor shall perform a total of five (5) dynamic load tests with signal matching and 24-hour (minimum) restrikes at Pier 4 to confirm the ultimate resistance of the piles. The first and second dynamic pile load tests will be completed on the first plumb and battered production piles driven as indicated on Pier No. 4 Seal & Distribution Slab Plan. The third test shall be completed on the next production pile at a different location within the pile group as directed by the Resident. The two remaining tests shall be completed as directed by Resident after approximately one half of the production piles have been installed. The required nominal resistance for the piles is the maximum factored axial pile load divided by a resistance factor equal to 0.65 per LRFD Specifications.

9. The driving system shall be operating at efficiency equal to or greater than that used in the wave equation submittal. If the driving system is not operating at the required efficiency, as indicated by the approved wave equation analysis and /or dynamic load tests results, the Contractor shall rebuild or replace driving system components, as required to provide an acceptable driving system, as approved by the Department. Rebuilding or replacing driving system components resulting from driving system inefficiency, including additional wave equation analyses and/or dynamic load tests, shall be at no additional cost.

SEAL COFFERDAM NOTES

1. When sheet piling is used for seal cofferdams, appropriate rolled corners shall be used, and the inside face of the sheet piling shall be at or outside of the seal concrete dimensions shown.

2. The seal concrete placement dimensions shown represent the minimum seal size necessary to meet design requirements and are not based on the use of any particular sheet pile section.

3. The horizontal pay limit for seal concrete will be to the dimensions shown on the plans. No additional payment will be made for concrete placed outside these limits.

4. The depth of the seals are set for the Q1.1 water elevation of 5.88. If the water elevation at the time of construction is higher, the depth of the seals shall be adjusted.

5. Seal dowel reinforcing bar shall be installed in 2-in. dia. drill holes at the locations shown on the Plans. Materials for drilling and grouting shall be a material listed on the MaineDOT list of prequalified Type 3 anchoring materials and shall develop the full yield strength of the bars. The Contractor shall provide a seal dowel submittal for review and approval by the Department. The submittal should indicate proposed hole preparation and cleaning methods, and grout material installation methods.

6. Pier seal concrete shall be placed on bedrock cleaned of all weathered rock, loose fractured rock, boulders and soil. Where the bedrock surface slope exceeds 4H:1V, the bedrock surface shall be benched in level steps or made completely level. Cofferdam excavation inspection shall be the responsibility of the Contractor and be conducted in accordance with Special Provision 511 - Cofferdams. An inspection report shall be submitted to the Resident for review. The report shall include bedrock elevation measurements and observations and assess the levelness, cleanliness, and sediment thickness. Sediment measurements and bedrock elevation measurements will be taken at a minimum of 20 evenly distributed locations.

7. Each seal shall be cored full depth in at least three (3) locations to ensure that the seal was satisfactorily placed. The final core run shall sample the bedrock surface. These locations will be approved by the Resident. Seal concrete core samples will a minimum of 3-in. O.D., be adequately stored in boxes and each core run labeled. In the event that voids or any other defects are found, the Contractor shall correct the defects in a manner approved by the Resident. For each core that reveals a void or defect, two additional cores shall be taken after repairs are made. One additional core shall be taken in approximately the same location as the original core. The other core will be located by the Resident. All core holes shall be refilled using a non-shrink grout. The cost of all coring and repairs will be considered incidental to related contract items.

8. Pier 4 cofferdam sheeting piling shall be left in place with a tip elevation of no less than Elev. -42.0 feet.

9. Seal concrete under Pier 1 footing shall be Class A concrete.

10. Payment for Pier No. 4 Seal will be made under Item No. 502.249, Structural Concrete Piers (Placed Under Water) (LS). Payment for all other pier seals will be made under Item No. 502.24, Structural Concrete Piers (Placed Under Water) (CY).

PIER DESIGN CRITERIA

1. Critical AASHTO Load Combination - (See Pier Note 1 and Pile Note 1)

2. Buoyancy: Water level assumed at EL. 11.34.

3. Stream flow: Velocity of 6.71 fps parallel to longitudinal centerline of pier.

4. Wind: 118.5 mph.

5. Ice: Thickness 2.5 feet, pressure 28.8 ksf at EL. 7.47, 30% of nose force applied transverse to pier.

6. Vessel Collision: 200 Ton barge @ 3.7 fps.

STATE OF MAINE
DEPARTMENT OF TRANSPORTATION

AC-BH-1267(400)

WIN 12674.00

BRIDGE NO. 2506

BRIDGE PLANS

PROJ. MANAGER	N. Benoit			
DESIGN-DETAILED	R. Noous	B. Nichols	Jan 2013	DATE
CHECKED-REVIEWED	E. Caswell	------	Jan 2013	SIGNATURE
DESIGN2-DETAILED2	------	------	------	
DESIGN3-DETAILED3	------	------	------	P.E. NUMBER
REVISIONS 1	------	------	------	
REVISIONS 2	------	------	------	DATE
REVISIONS 3	------	------	------	
REVISIONS 4	------	------	------	
FIELD CHANGES	------	------	------	

MAINE KENNEBEC BRIDGE
KENNEBEC RIVER
RICHMOND, SAGADAHOC CTY. DRESDEN, LINCOLN CTY.

PIER NOTES

SHEET NUMBER
106
OF 238

Filename: ...\MSTA\106_Pier_general.dgn Division: BRIDGE Username: dana.damren Date:4/8/2013

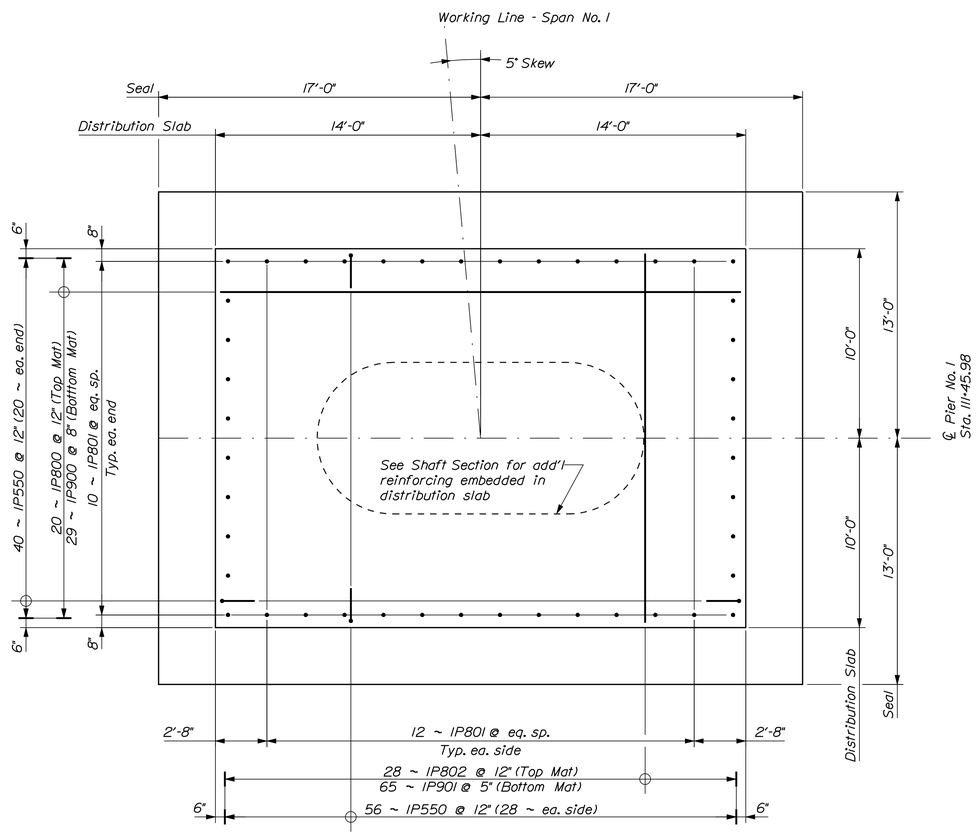

PIER NO. 1 SEAL & DISTRIBUTION SLAB PLAN

Flow

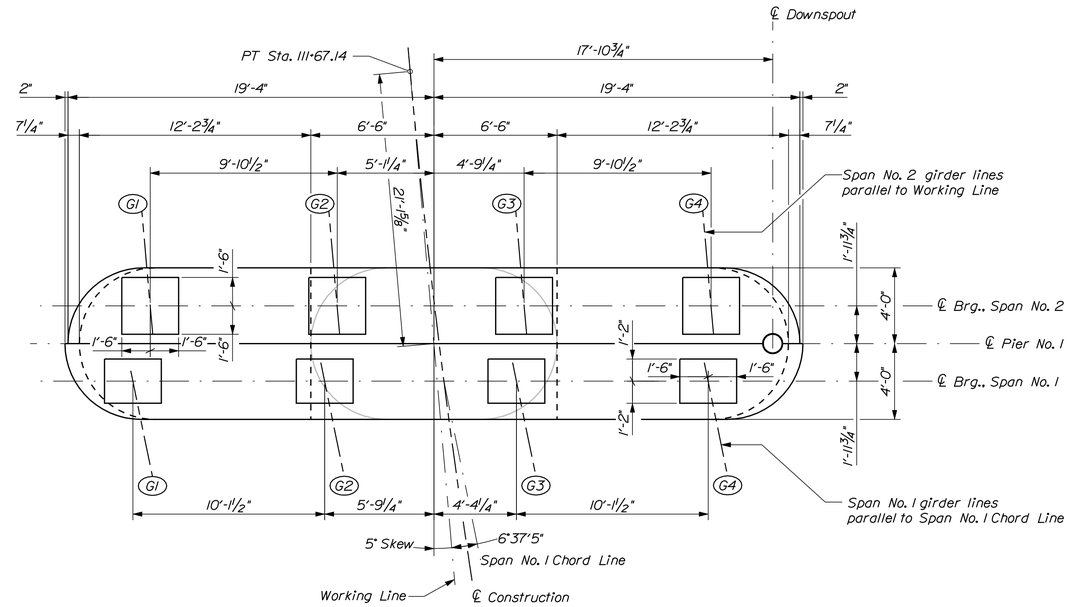

PIER NO. 1 CAP PLAN

Flow

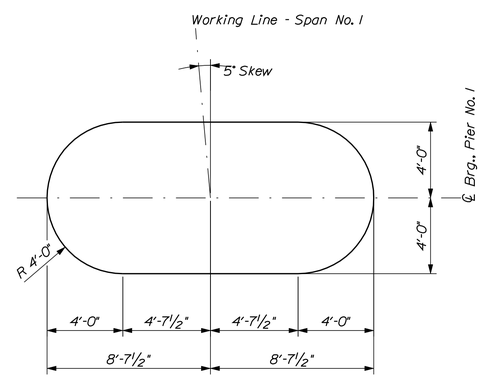

PIER NO. 1 SHAFT BASE PLAN

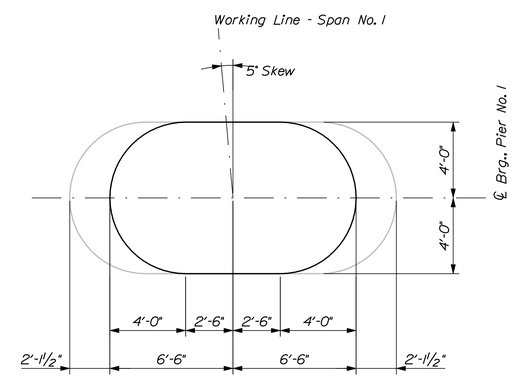

PIER NO. 1 SHAFT TOP PLAN

@ El. 40.70

STATE OF MAINE
DEPARTMENT OF TRANSPORTATION

AC-BH-1267(400)

WIN 12674.00

BRIDGE NO. 2506

BRIDGE PLANS

PROJ. MANAGER	N. Benoit	BY	DATE
DESIGN-DETAILED	R. Noous	B. Nichols	Jan 2013
CHECKED-REVIEWED	-----	-----	-----
DESIGN2-DETAILED2	-----	-----	-----
DESIGN3-DETAILED3	-----	-----	-----
REVISIONS 1	-----	-----	-----
REVISIONS 2	-----	-----	-----
REVISIONS 3	-----	-----	-----
REVISIONS 4	-----	-----	-----
FIELD CHANGES	-----	-----	-----

SIGNATURE

P.E. NUMBER

DATE

MAINE KENNEBEC BRIDGE
KENNEBEC RIVER
RICHMOND, SAGADAHOC CTY. DRESDEN, LINCOLN CTY.

PIER NO. 1 PLAN

SHEET NUMBER

107

OF 238

Filename: ...\BRIDGE\MSTA\107_Pier1_plan.dgn Division: BRIDGE Username: dana.damren Date:3/27/2013

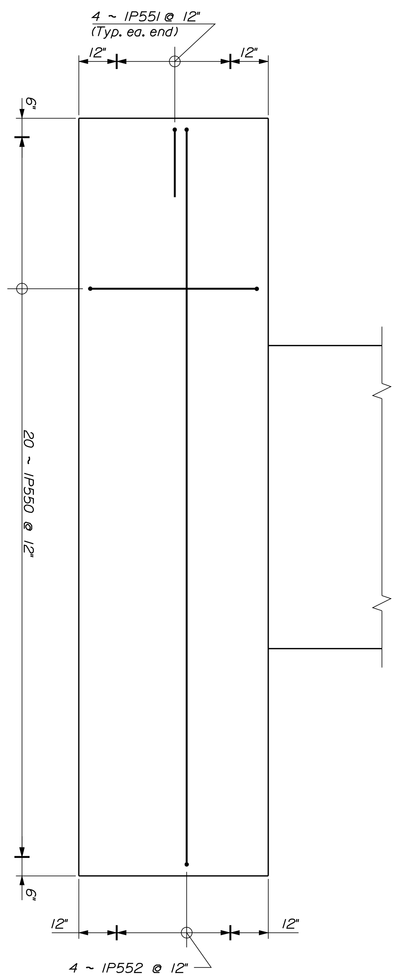

TYPICAL DISTRIBUTION SLAB END ELEVATION

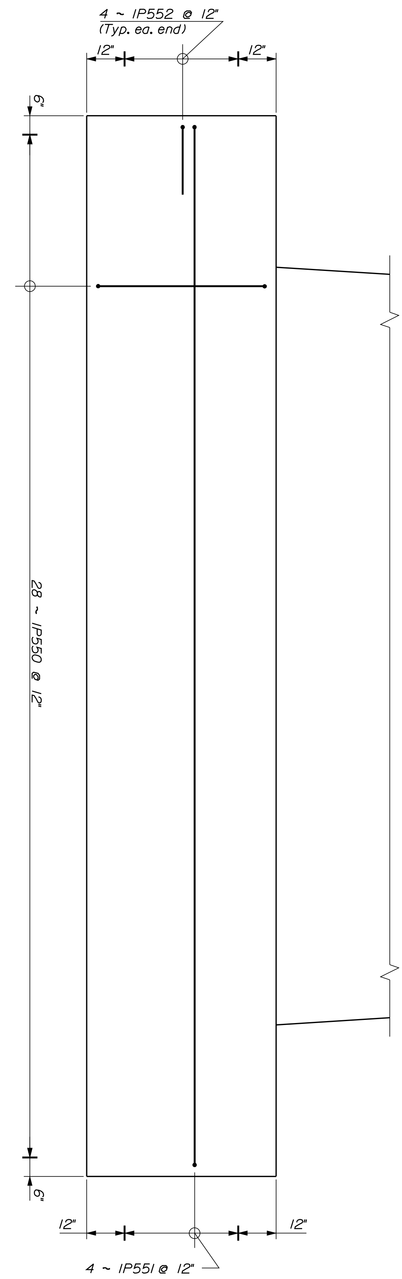

TYPICAL DISTRIBUTION SLAB ELEVATION

SHEET NUMBER 108 OF 238

MAINE KENNEBEC BRIDGE
KENNEBEC RIVER
RICHMOND, SAGADAHOC CTY. DRESDEN, LINCOLN CTY.

PIER NO. 1 SLAB ELEVATIONS

PROJ. MANAGER	N. Benoit	BY	DATE
DESIGN-DETAILED	R. Noous	B. Nichols	Jan 2013
CHECKED-REVIEWED	E. Caswell	_____	Jan 2013
DESIGN2-DETAILED2	_____	_____	_____
DESIGN3-DETAILED3	_____	_____	_____
REVISIONS 1	_____		_____
REVISIONS 2	_____		_____
REVISIONS 3	_____		_____
REVISIONS 4	_____		_____
FIELD CHANGES	_____		_____

SIGNATURE
P.E. NUMBER
DATE

STATE OF MAINE
DEPARTMENT OF TRANSPORTATION
AC-BH-1267(400)
BRIDGE NO. 2506 WIN 12674.00 BRIDGE PLANS

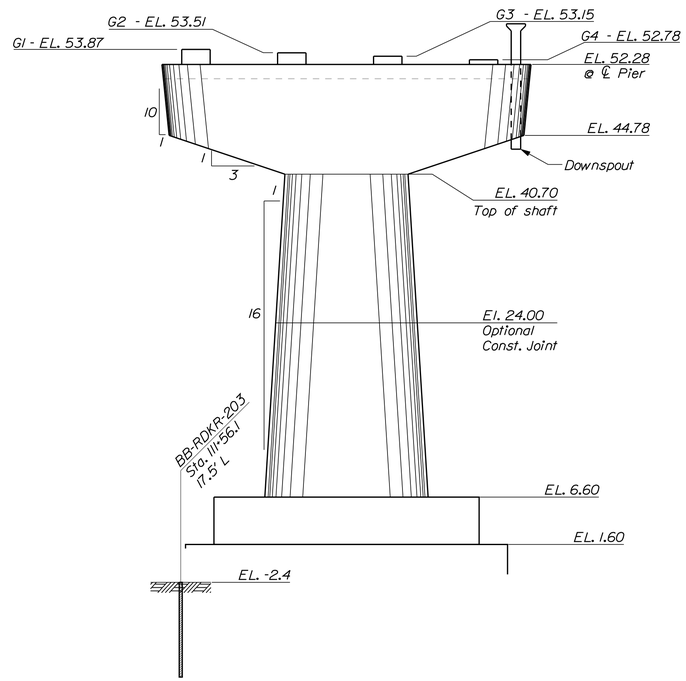

PIER NO. 1 ELEVATION
Looking Upstation - Showing Span No. 1 bearing pedestals
Flow →

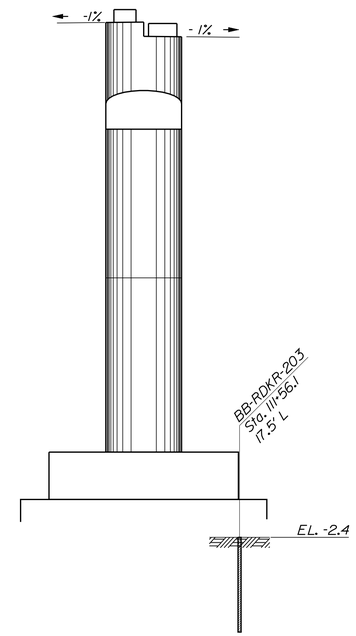

PIER NO. 1 END ELEVATION

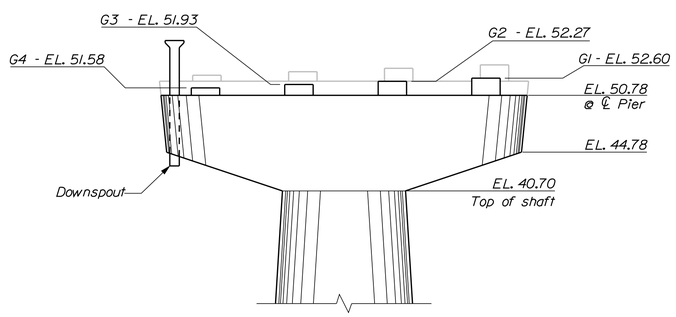

PIER NO. 1 ELEVATION
Looking Downstation - Showing Span No. 2 bearing pedestals
← Flow

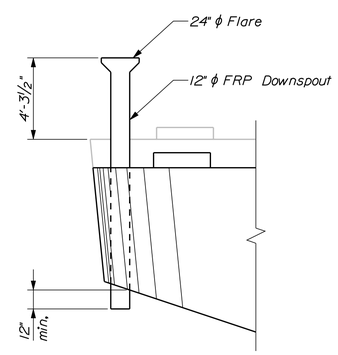

DOWNSPOUT

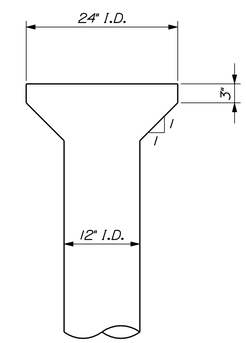

DOWNSPOUT DETAIL

STATE OF MAINE
DEPARTMENT OF TRANSPORTATION

AC-BH-1267(400)

WIN 12674.00

BRIDGE NO. 2506

BRIDGE PLANS

		BY	DATE
PROJ. MANAGER	N. Benoit		
DESIGN-DETAILED	R. Noous	B. Nichols	Jan 2013
CHECKED-REVIEWED	E. Coswell	------	Jan 2013
DESIGN2-DETAILED2	------	------	------
DESIGN3-DETAILED3	------	------	------
REVISIONS 1	------	------	------
REVISIONS 2	------	------	------
REVISIONS 3	------	------	------
REVISIONS 4	------	------	------
FIELD CHANGES	------	------	------

SIGNATURE

P.E. NUMBER

DATE

MAINE KENNEBEC BRIDGE
KENNEBEC RIVER
RICHMOND, SAGADAHOC CTY. DRESDEN, LINCOLN CTY.

PIER NO. 1 ELEVATIONS

SHEET NUMBER
109
OF 238

Filename: ...\BRIDGE\MSTA\109_Pier1_elev.dgn Division: BRIDGE Username: dana.damren Date:3/27/2013

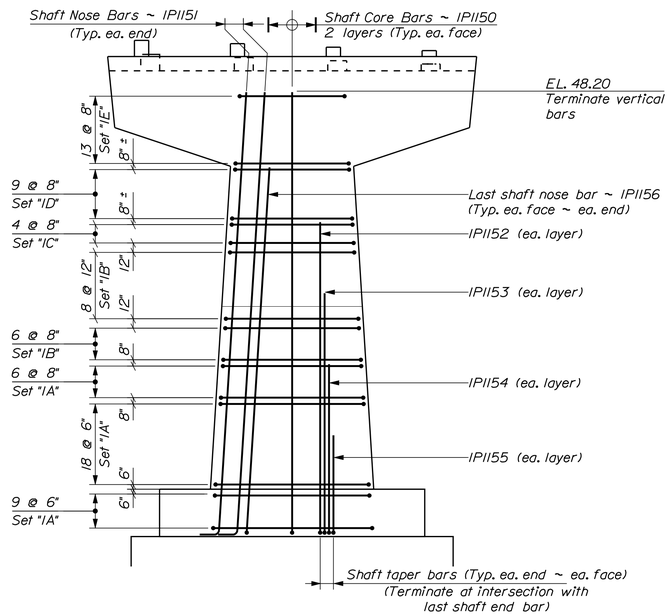

PIER NO. 1 SHAFT REINFORCING

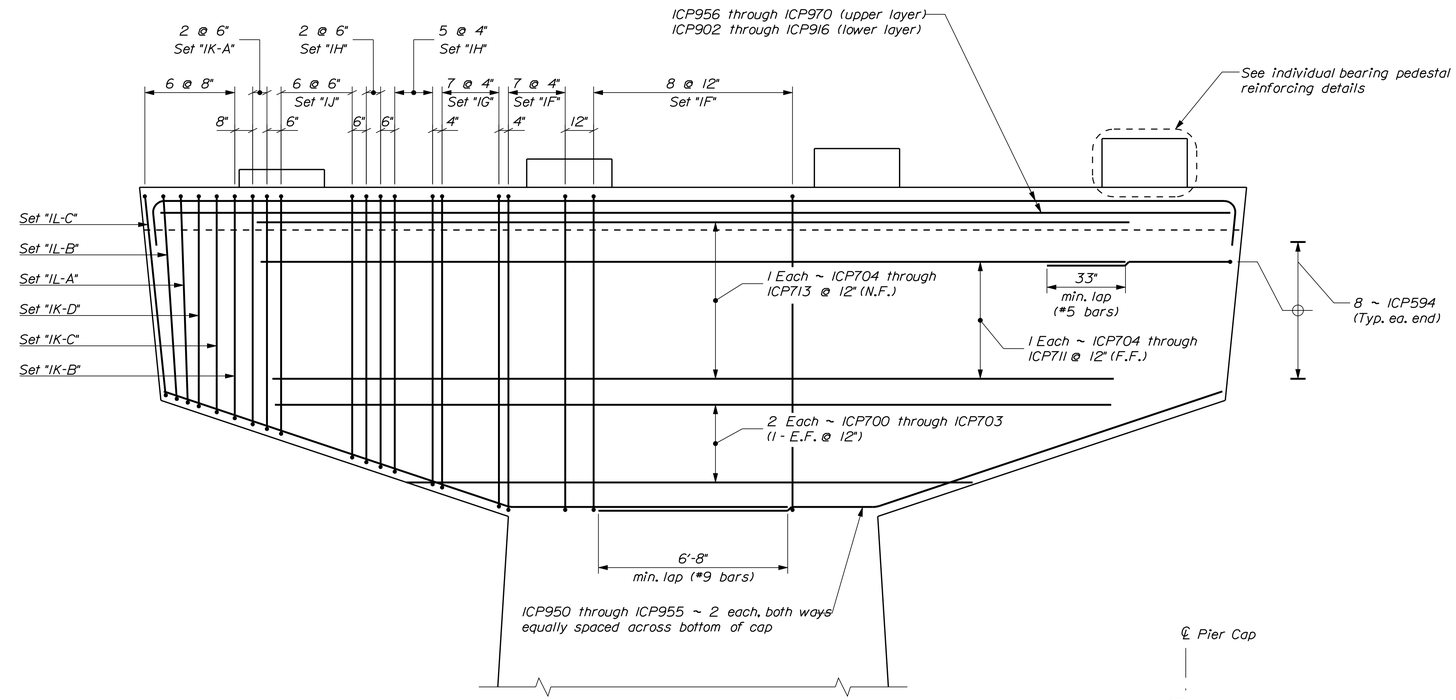

PIER NO. 1 CAP REINFORCING

Sets marked with "*" are typical both ends of cap

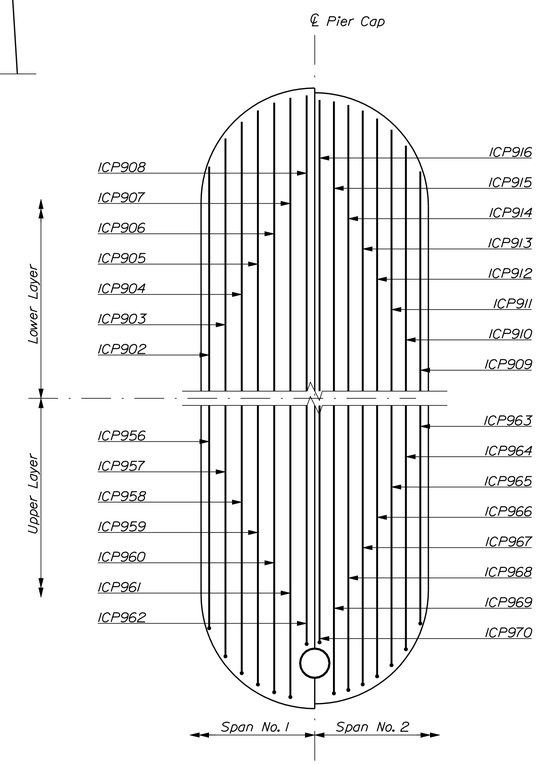

TOP OF PIER CAP REINFORCING

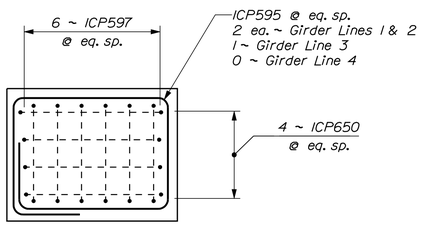

PIER NO. 1 BEARING PEDESTAL REINFORCING

~ Span No. 1 ~

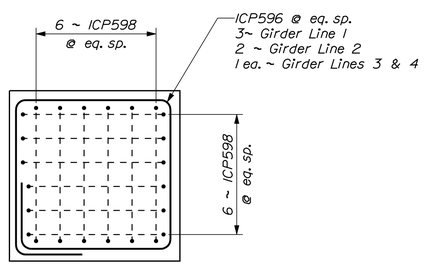

PIER NO. 1 BEARING PEDESTAL REINFORCING

~ Span No. 2 ~

PIER NO. 1 REINFORCING STEEL SET SCHEDULE

Set	Qty	Location	Bar Designations
1A	33	Pier Shaft	9 ~ IP553, 2 ~ IP554, 2 ~ IP555, 2 ~ IP556, 2 ~ IP557, 8 ~ IP558, 2 ~ IP562, 2 ~ IP566
1B	14	Pier Shaft	7 ~ IP553, 2 ~ IP554, 2 ~ IP555, 2 ~ IP556, 2 ~ IP557, 8 ~ IP558, 2 ~ IP563, 2 ~ IP567
1C	4	Pier Shaft	7 ~ IP553, 2 ~ IP554, 2 ~ IP555, 2 ~ IP556, 12 ~ IP559, 2 ~ IP563
1D	9	Pier Shaft	5 ~ IP553, 2 ~ IP554, 2 ~ IP555, 2 ~ IP556, 12 ~ IP560, 2 ~ IP564
1E	13	Pier Shaft	5 ~ ICP553, 2 ~ ICP555, 2 ~ ICP556, 12 ~ ICP561, 2 ~ ICP565
1F	22	Pier Cap Stirrup	1 ~ ICP571, 1 ~ ICP582, 1 ~ ICP588
1G	14	Pier Cap Stirrup	1 ~ ICP572, 1 ~ ICP583, 1 ~ ICP589
1H	14	Pier Cap Stirrup	1 ~ ICP573, 1 ~ ICP584, 1 ~ ICP590
1J	12	Pier Cap Stirrup	1 ~ ICP574, 1 ~ ICP585, 1 ~ ICP591
1K-A	4	Pier Cap Stirrup	1 ~ ICP575, 1 ~ ICP586, 1 ~ ICP592
1K-B	2	Pier Cap Stirrup	1 ~ ICP576, 1 ~ ICP586, 1 ~ ICP592
1K-C	2	Pier Cap Stirrup	1 ~ ICP577, 1 ~ ICP586, 1 ~ ICP592
1K-D	2	Pier Cap Stirrup	1 ~ ICP578, 1 ~ ICP586, 1 ~ ICP592
1L-A	2	Pier Cap Stirrup	1 ~ ICP579, 1 ~ ICP587, 1 ~ ICP593
1L-B	2	Pier Cap Stirrup	1 ~ ICP580, 1 ~ ICP587, 1 ~ ICP593
1L-C	2	Pier Cap Stirrup	1 ~ ICP581, 1 ~ ICP587, 1 ~ ICP593

STATE OF MAINE
DEPARTMENT OF TRANSPORTATION

AC-BH-1267(400)

WIN 12674.00

BRIDGE NO. 2506

BRIDGE PLANS

PROJ. MANAGER	N. Benoit	BY	DATE
DESIGN-DETAILED	R. Noous	B. Nichols	Jan 2013
CHECKED-REVIEWED	E. Caswell	------	Jan 2013
DESIGN2-DETAILED2	------	------	------
DESIGN3-DETAILED3	------	------	------
REVISIONS 1	------	------	------
REVISIONS 2	------	------	------
REVISIONS 3	------	------	------
REVISIONS 4	------	------	------
FIELD CHANGES	------	------	------

SIGNATURE

P.E. NUMBER

DATE

MAINE KENNEBEC BRIDGE
KENNEBEC RIVER
RICHMOND, SAGADAHOC CTY. DRESDEN, LINCOLN CTY.

PIER NO. 1 REINFORCING

SHEET NUMBER

110

OF 238

Filename: ...\MSTA\110_Pier1_reinf.dgn Division: BRIDGE Username: dana.damren Date:3/27/2013

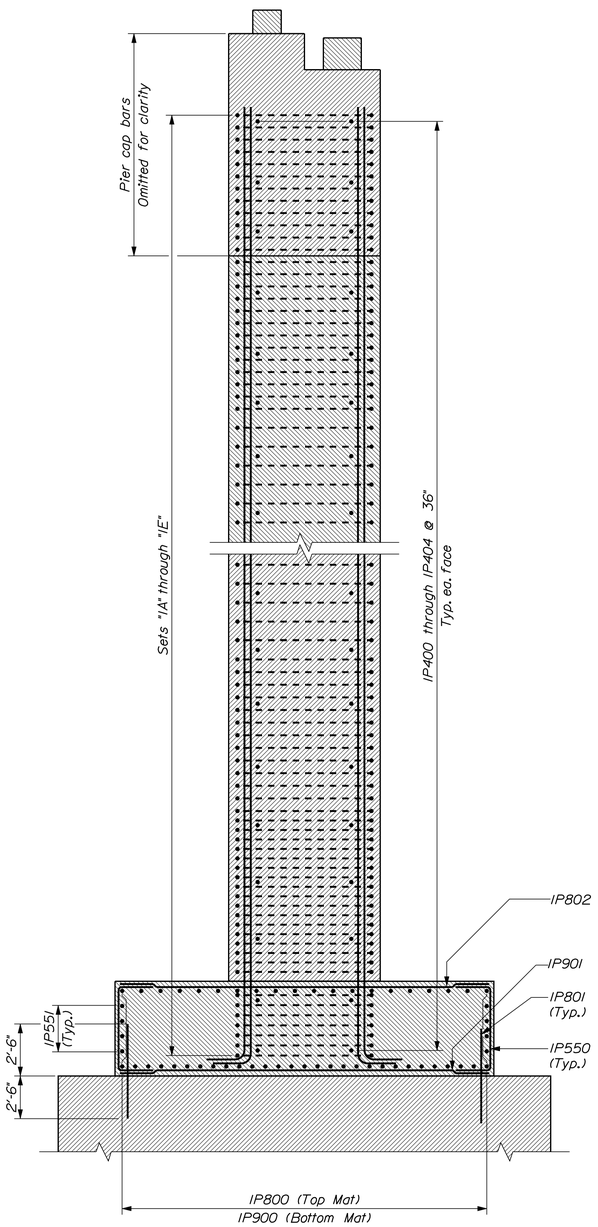

PIER NO. 1 SECTION

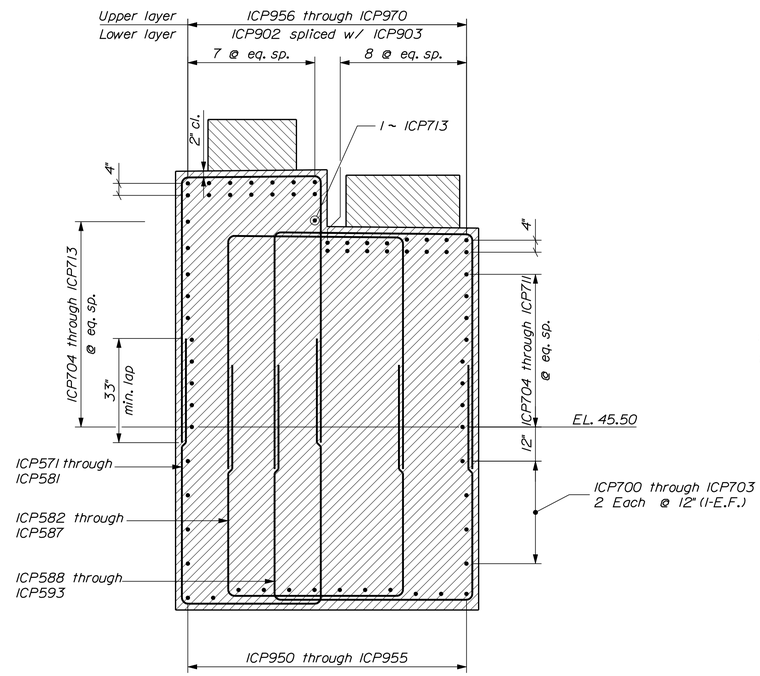

CAP CANTILEVER SECTION

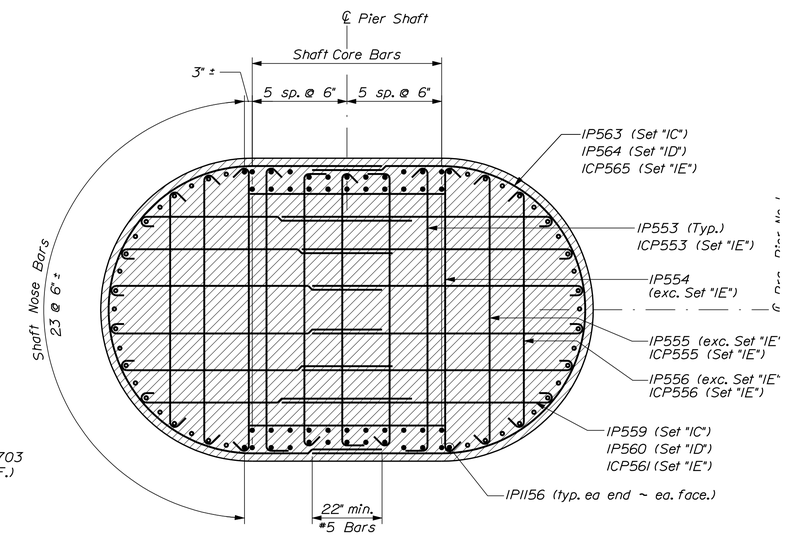

HORIZONTAL SECTION AT SHAFT TOP

90 vertical bars ~ Sets "IC" through "IE" shown

• = IP1150 (unless noted) ∘ = IP1151

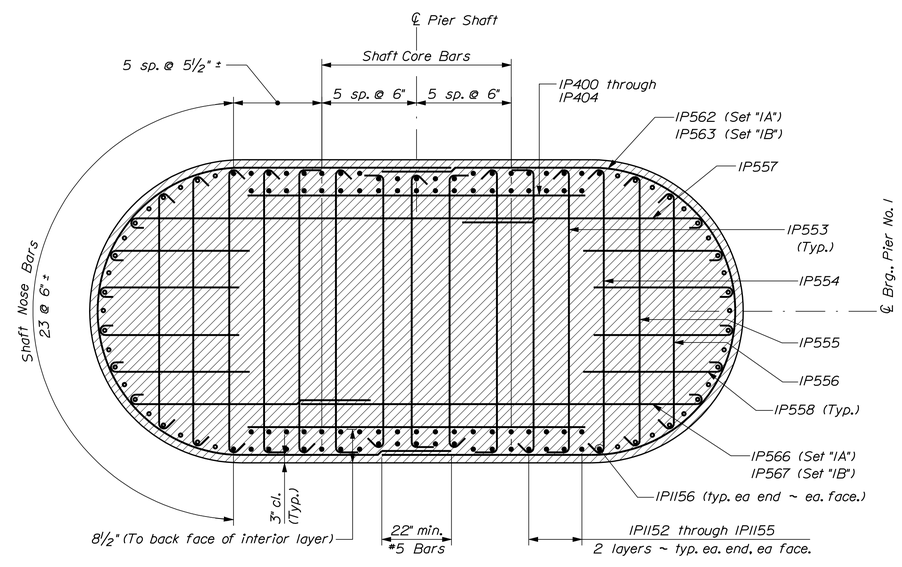

HORIZONTAL SECTION AT SHAFT BASE

122 vertical bars ~ Sets "IA" & "IB" shown

• = IP1150 (unless noted) ∘ = IP1151

STATE OF MAINE
DEPARTMENT OF TRANSPORTATION

AC-BH-1267(400)

WIN 12674.00

BRIDGE NO. 2506

BRIDGE PLANS

PROJ. MANAGER	N. Benoit	BY	DATE
DESIGN-DETAILED	R. Noous	B. Nichols	Jan 2013
CHECKED-REVIEWED	E. Caswell	------	Jan 2013
DESIGN2-DETAILED2	------	------	------
DESIGN3-DETAILED3	------	------	------
REVISIONS 1	------	------	------
REVISIONS 2	------	------	------
REVISIONS 3	------	------	------
REVISIONS 4	------	------	------
FIELD CHANGES	------	------	------

SIGNATURE

P.E. NUMBER

DATE

MAINE KENNEBEC BRIDGE
KENNEBEC RIVER
RICHMOND, SAGADAHOC CTY. DRESDEN, LINCOLN CTY.

PIER NO. 1 SECTIONS

SHEET NUMBER

111

OF 238

Filename: ...\BRIDGE\MSTA\111_Pier1_sect.dgn Division: BRIDGE Username: dana.damren Date:3/27/2013

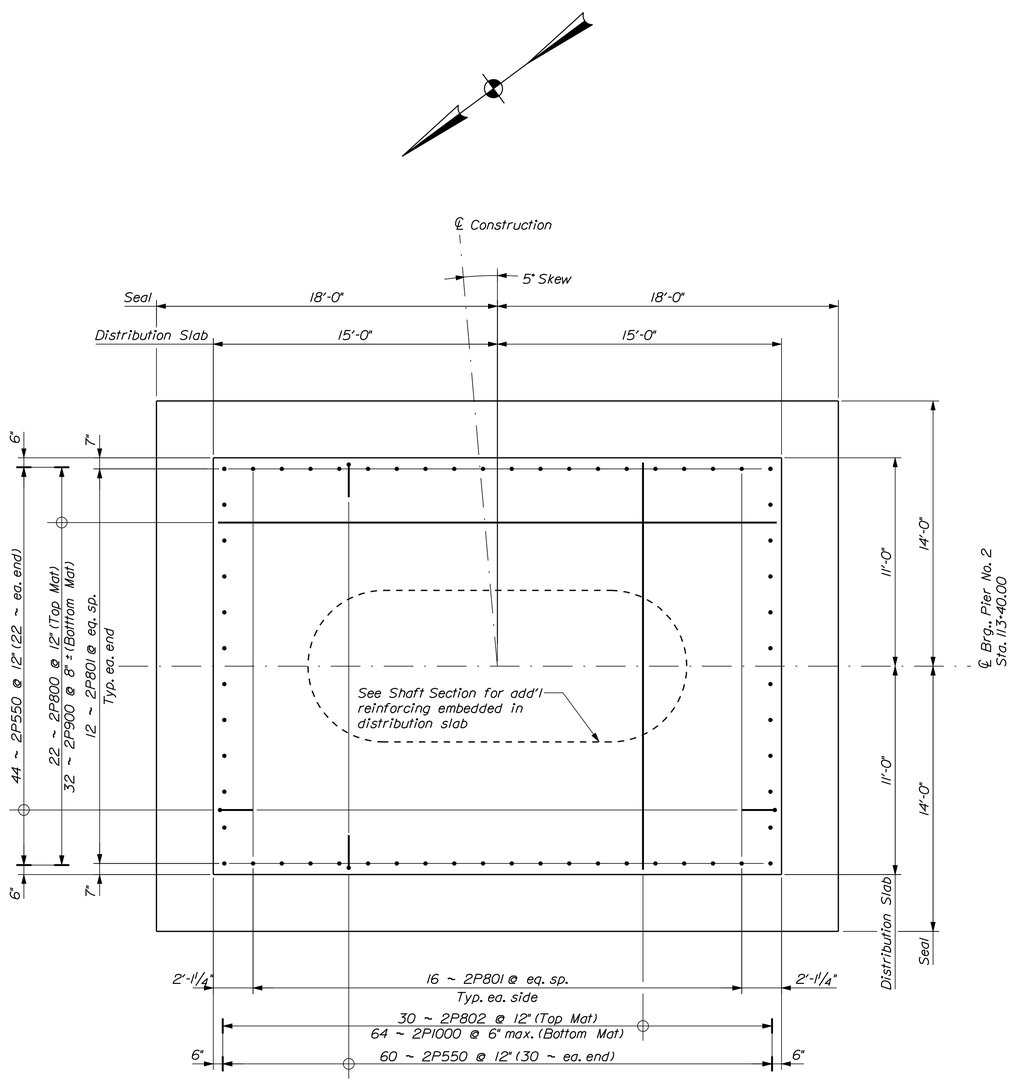

PIER NO. 2 SEAL & DISTRIBUTION SLAB PLAN

Flow →

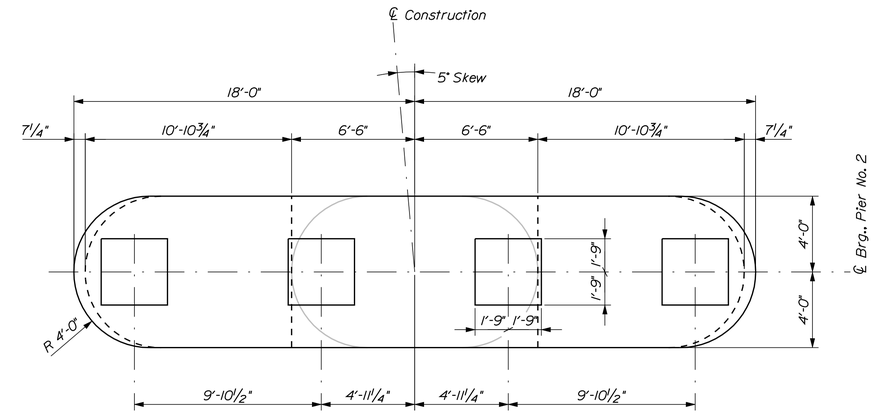

PIER NO. 2 CAP PLAN

Flow →

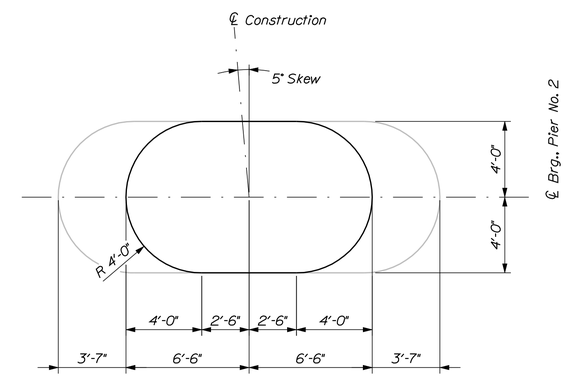

PIER NO. 2 SHAFT TOP PLAN

@ El. 52.50

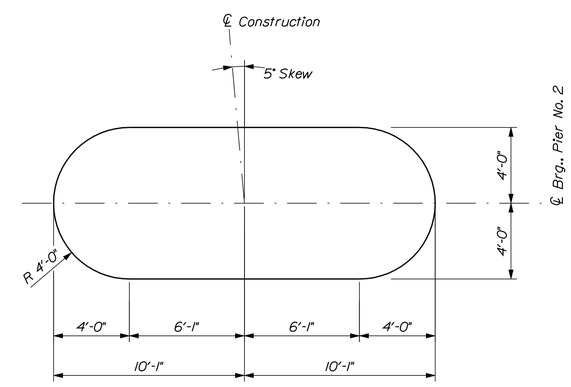

PIER NO. 2 SHAFT BASE PLAN

STATE OF MAINE
DEPARTMENT OF TRANSPORTATION

AC-BH-1267(400)

WIN 12674.00

BRIDGE NO. 2506

BRIDGE PLANS

PROJ. MANAGER	N. Benoit	BY	DATE
DESIGN-DETAILED	R. Noous	B. Nichols	Jan 2013
CHECKED-REVIEWED	E. Caswell	------	Jan 2013
DESIGN2-DETAILED2	------	------	SIGNATURE
DESIGN3-DETAILED3	------	------	------
REVISIONS: 1	------	------	------
REVISIONS: 2	------	------	P.E. NUMBER
REVISIONS: 3	------	------	------
REVISIONS: 4	------	------	------
FIELD CHANGES	------	------	DATE

MAINE KENNEBEC BRIDGE
KENNEBEC RIVER
RICHMOND, SAGADAHOC CTY. DRESDEN, LINCOLN CTY.

PIER NO. 2 PLAN

SHEET NUMBER

112

OF 238

Filename: ...\BRIDGE\MSTA\112_Pier2_plan.dgn Division: BRIDGE Username: dana.damren Date:3/27/2013

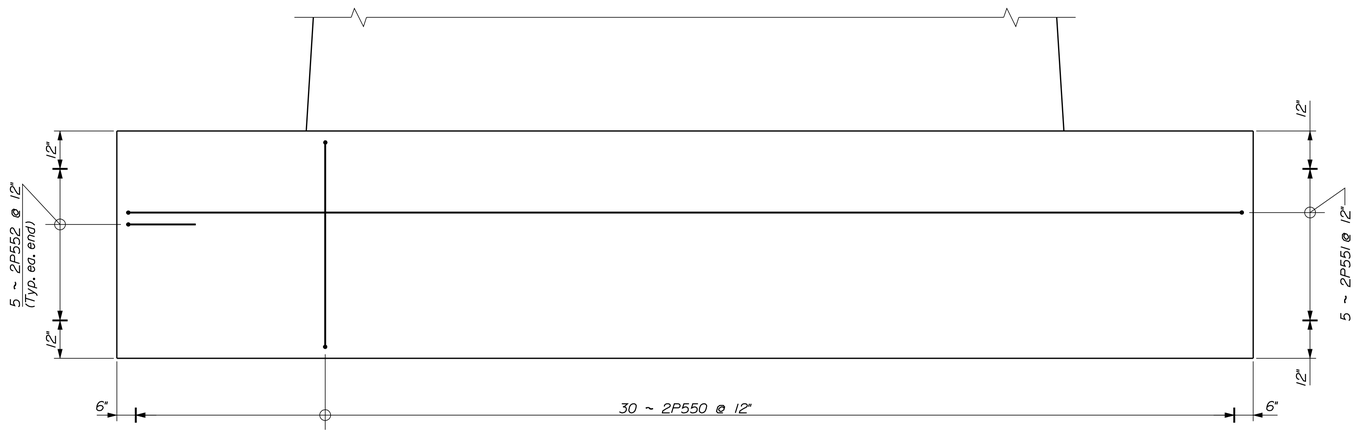

TYPICAL DISTRIBUTION SLAB ELEVATION

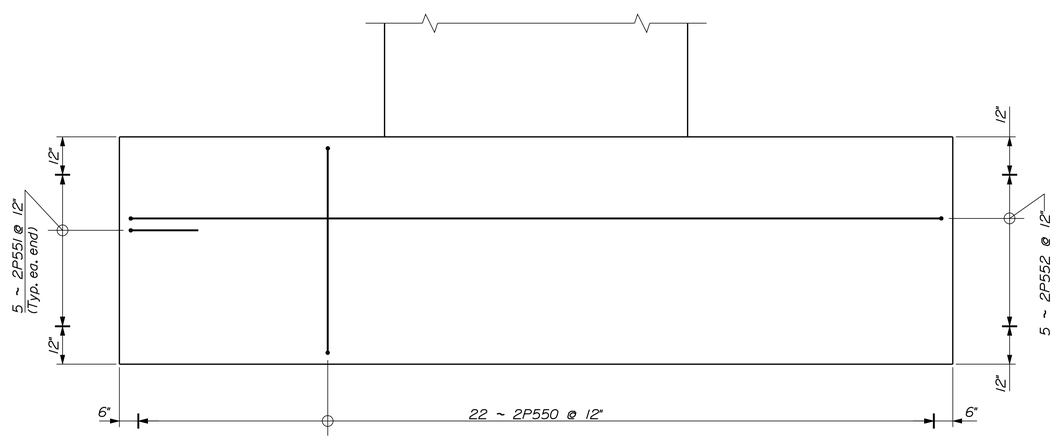

TYPICAL DISTRIBUTION SLAB END ELEVATION

STATE OF MAINE
DEPARTMENT OF TRANSPORTATION

AC-BH-1267(400)

WIN 12674.00

BRIDGE NO. 2506

BRIDGE PLANS

PROJ. MANAGER	N. Benoit	BY	DATE
DESIGN-DETAILED	R. Noous	B. Nichols	Jan 2013
CHECKED-REVIEWED	E. Caswell	------	Jan 2013
DESIGN2-DETAILED2	------	------	------
DESIGN3-DETAILED3	------	------	------
REVISIONS 1	------	------	------
REVISIONS 2	------	------	------
REVISIONS 3	------	------	------
REVISIONS 4	------	------	------
FIELD CHANGES	------	------	------

SIGNATURE

P.E. NUMBER

DATE

MAINE KENNEBEC BRIDGE
KENNEBEC RIVER
RICHMOND, SAGADAHOC CTY. DRESDEN, LINCOLN CTY.

PIER NO. 2 SLAB ELEVATIONS

SHEET NUMBER

113

OF 238

Filename: ...\MSTA\113_Pier2_slabelev.dgn Division: BRIDGE Username: dana.damren Date:3/27/2013

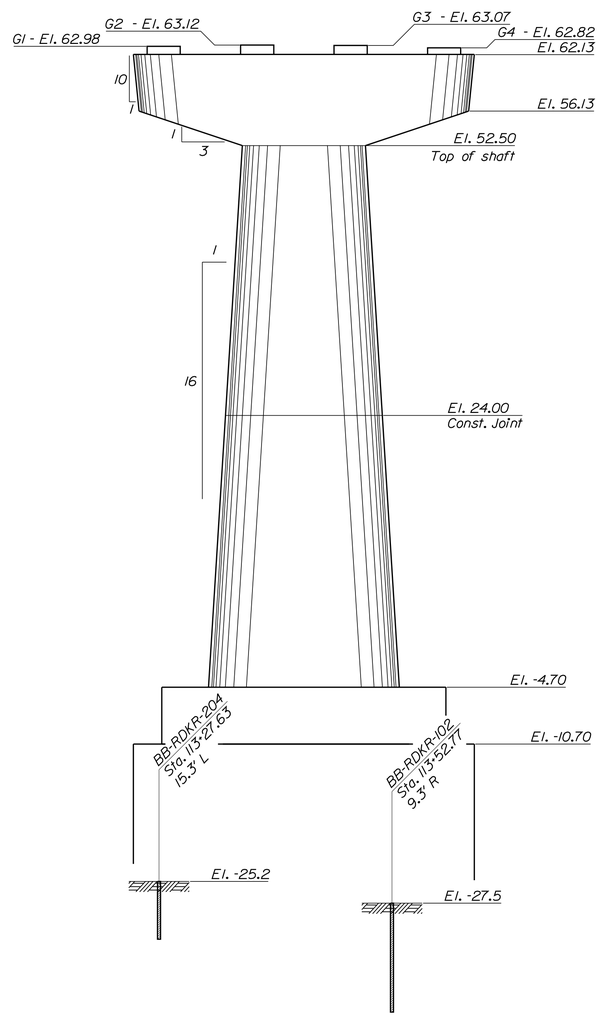

PIER NO. 2 ELEVATION

Flow

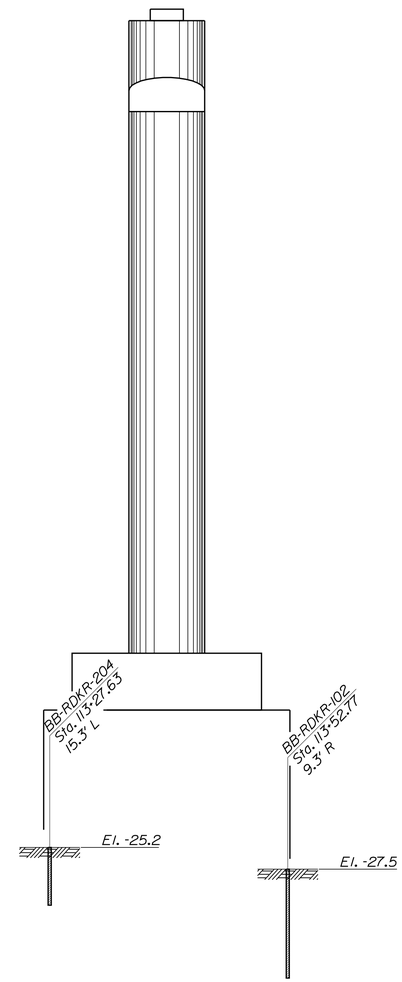

PIER NO. 2 END ELEVATION

STATE OF MAINE
DEPARTMENT OF TRANSPORTATION

AC-BH-1267(400)

WIN 12674.00

BRIDGE NO. 2506

BRIDGE PLANS

PROJ. MANAGER	N. Benoit	BY	DATE
DESIGN-DETAILED	R. Noous	B. Nichols	Jan 2013
CHECKED-REVIEWED	E. Caswell	------	Jan 2013
DESIGN2-DETAILED2	------	------	------
DESIGN3-DETAILED3	------	------	------
REVISIONS 1	------	------	------
REVISIONS 2	------	------	------
REVISIONS 3	------	------	------
REVISIONS 4	------	------	------
FIELD CHANGES	------	------	------

SIGNATURE

P.E. NUMBER

DATE

MAINE KENNEBEC BRIDGE
KENNEBEC RIVER
RICHMOND, SAGADAHOC CTY. DRESDEN, LINCOLN CTY.

PIER NO. 2 ELEVATIONS

SHEET NUMBER

114

OF 238

Filename: ...\BRIDGE\MSTA\114_Pier2_elev.dgn Division: BRIDGE Username: dana.damren Date:3/27/2013

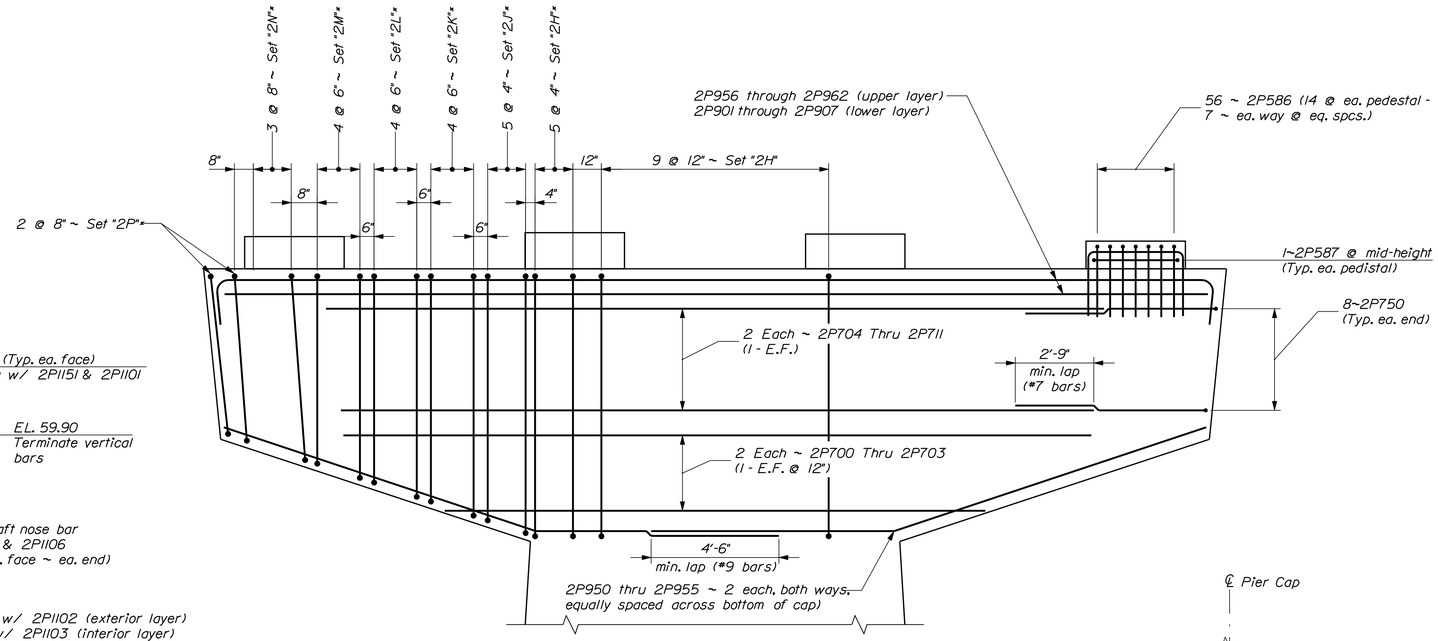

PIER NO. 2 CAP REINFORCING

Sets with "*" are typical both ends of cap

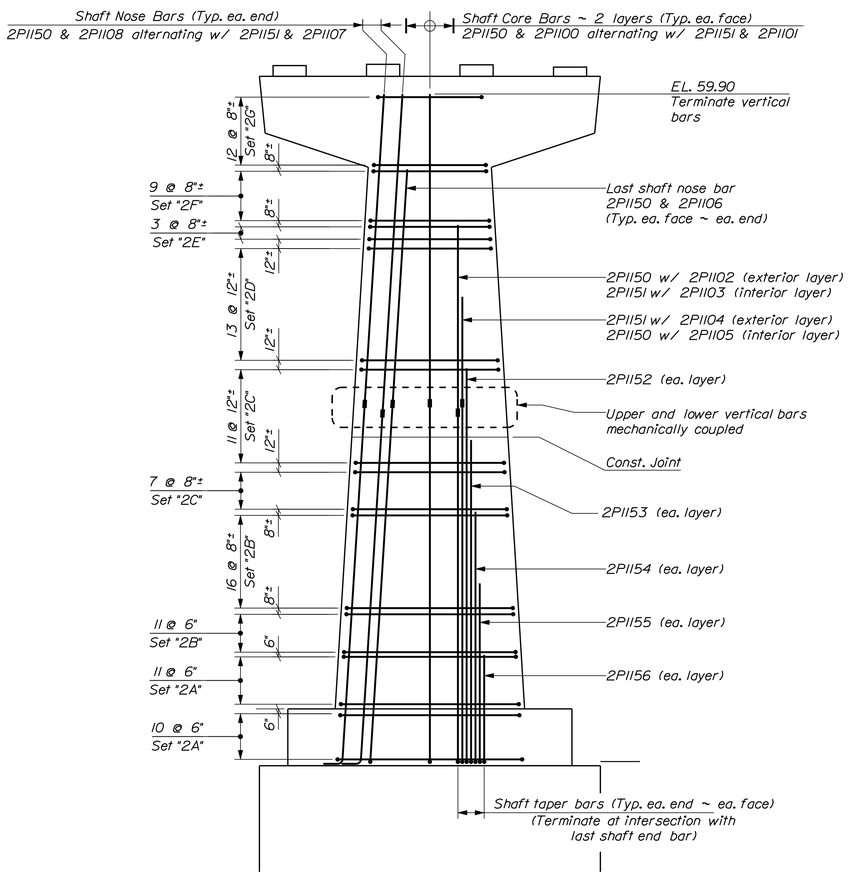

PIER NO. 2 ELEVATION

PIER NO. 2 REINFORCING STEEL SET SCHEDULE

Set	Qty	Location	Bar Designations
2A	21	Pier Shaft	13 ~ 2P553, 2 ~ 2P554, 2 ~ 2P555, 2 ~ 2P556, 2 ~ 2P557, 8 ~ 2P558, 2 ~ 2P562, 2 ~ 2P568
2B	27	Pier Shaft	11 ~ 2P553, 2 ~ 2P554, 2 ~ 2P555, 2 ~ 2P556, 2 ~ 2P557, 8 ~ 2P558, 2 ~ 2P563, 2 ~ 2P569
2C	18	Pier Shaft	9 ~ 2P553, 2 ~ 2P554, 2 ~ 2P555, 2 ~ 2P556, 2 ~ 2P557, 8 ~ 2P558, 2 ~ 2P564, 2 ~ 2P570
2D	13	Pier Shaft	7 ~ 2P553, 2 ~ 2P554, 2 ~ 2P555, 2 ~ 2P556, 2 ~ 2P557, 8 ~ 2P558, 2 ~ 2P565, 2 ~ 2P571
2E	3	Pier Shaft	7 ~ 2P553, 2 ~ 2P554, 2 ~ 2P555, 2 ~ 2P556, 12 ~ 2P559, 2 ~ 2P565
2F	9	Pier Shaft	5 ~ 2P553, 2 ~ 2P554, 2 ~ 2P555, 2 ~ 2P556, 12 ~ 2P560, 2 ~ 2P565
2G	12	Pier Shaft	5 ~ 2P553, 2 ~ 2P555, 2 ~ 2P556, 12 ~ 2P561, 2 ~ 2P567
2H	19	Pier Cap Stirrup	4 ~ 2P572, 2 ~ 2P579
2J	10	Pier Cap Stirrup	4 ~ 2P573, 2 ~ 2P580
2K	8	Pier Cap Stirrup	4 ~ 2P574, 2 ~ 2P581
2L	8	Pier Cap Stirrup	4 ~ 2P575, 2 ~ 2P582
2M	8	Pier Cap Stirrup	4 ~ 2P576, 2 ~ 2P583
2N	6	Pier Cap Stirrup	4 ~ 2P577, 2 ~ 2P584
2P	4	Pier Cap Stirrup	4 ~ 2P578, 2 ~ 2P585

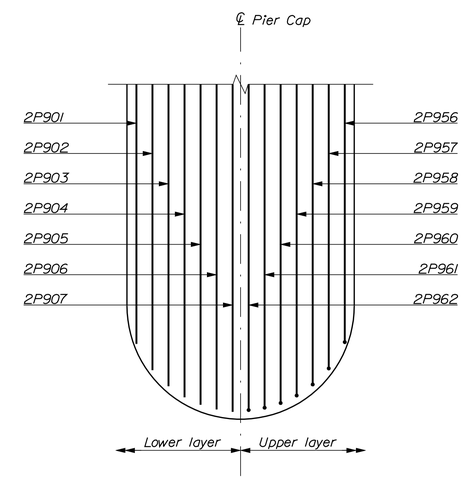

TOP OF PIER CAP REINFORCING

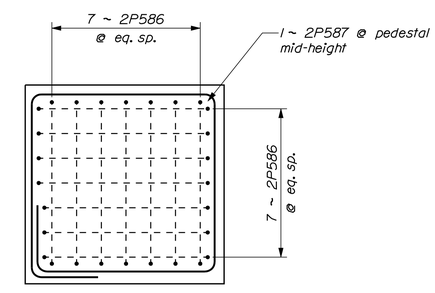

BEARING PEDESTAL REINFORCING

STATE OF MAINE
DEPARTMENT OF TRANSPORTATION

AC-BH-1267(400)

WIN 12674.00

BRIDGE NO. 2506

BRIDGE PLANS

		BY	DATE
PROJ. MANAGER	N. Benoit		
DESIGN-DETAILED	R. Napus	B. Nichols	Jan 2013
CHECKED-REVIEWED	E. Caswell		Jan 2013
DESIGN2-DETAILED2			
DESIGN3-DETAILED3			
REVISIONS 1			
REVISIONS 2			
REVISIONS 3			
REVISIONS 4			
FIELD CHANGES			

SIGNATURE

P.E. NUMBER

DATE

MAINE KENNEBEC BRIDGE
KENNEBEC RIVER
RICHMOND, SAGADAHOC CTY. DRESDEN, LINCOLN CTY.

PIER NO. 2 REINFORCING

SHEET NUMBER

115

OF 238

Filename: ...\MSTA\115_Pier2_reinf.dgn Division: BRIDGE Username: dana.damren Date:3/27/2013

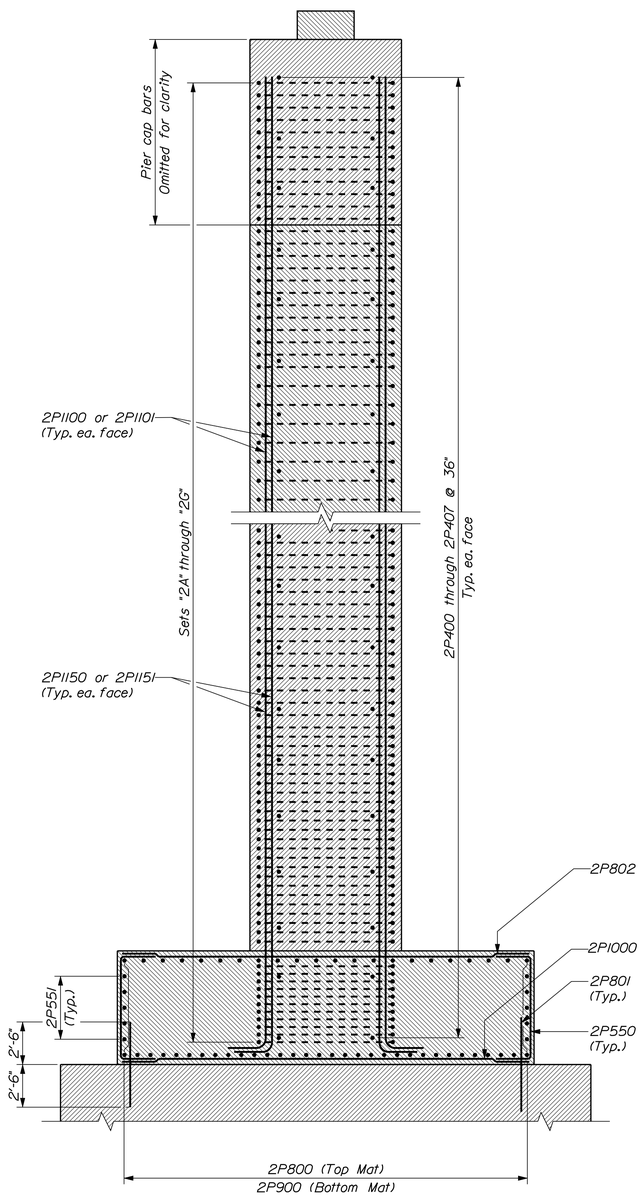

PIER NO. 2 SECTION

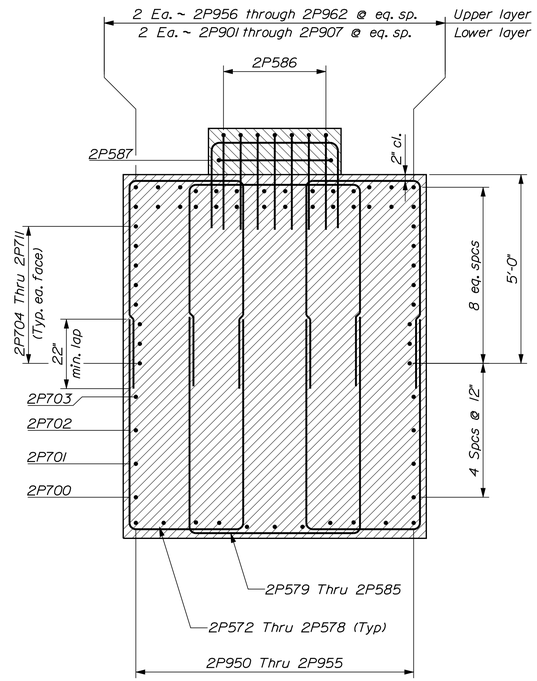

CAP CANTILEVER SECTION

Set "2H" Shown

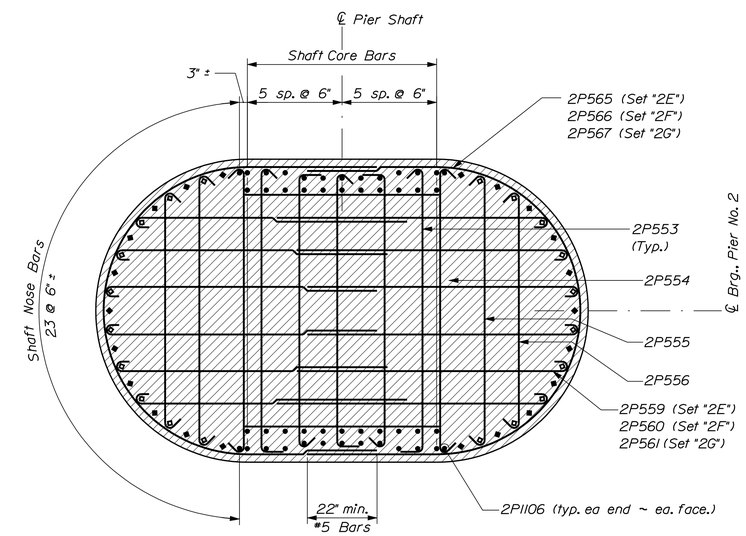

HORIZONTAL SECTION AT SHAFT TOP

90 vertical bars ~ Sets "2E" through "2G" shown

∘ = 2P1100 ◇ = 2P1108

• = 2P1101 (unless noted) ◆ = 2P1107

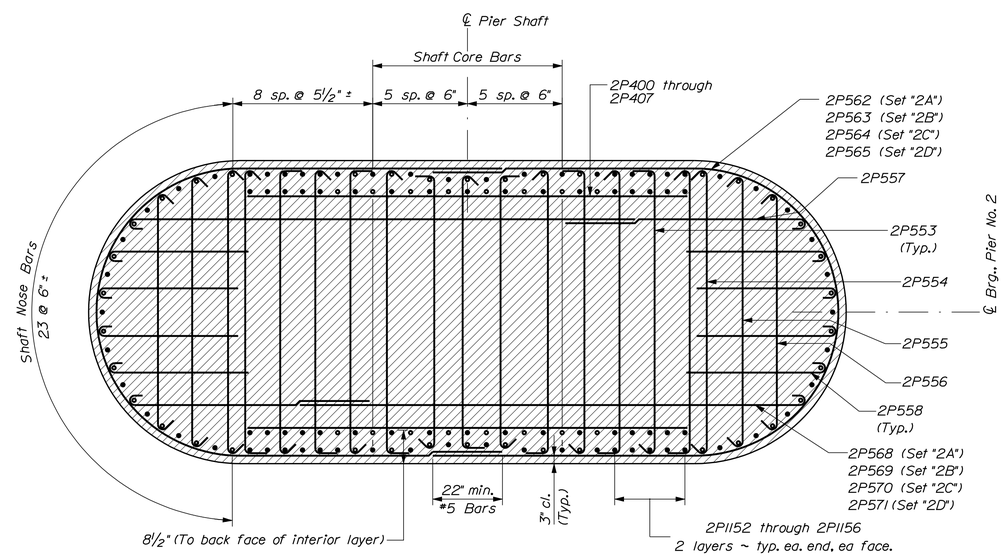

HORIZONTAL SECTION AT SHAFT BASE

146 vertical bars ~ Sets "2A" through "2D" shown

∘ = 2P1150

• = 2P1151 (unless noted)

STATE OF MAINE
DEPARTMENT OF TRANSPORTATION

AC-BH-1267(400)

WIN 12674.00

BRIDGE NO. 2506

BRIDGE PLANS

	BY	DATE
PROJ. MANAGER	N. Benoit	
DESIGN-DETAILED	R. Nadeau	B. Nichols	Jan 2013
CHECKED-REVIEWED	E. Caswell	------	------
DESIGN2-DETAILED2	------	------	------
DESIGN3-DETAILED3	------	------	------
REVISIONS 1	------	------	------
REVISIONS 2	------	------	------
REVISIONS 3	------	------	------
REVISIONS 4	------	------	------
FIELD CHANGES	------	------	------

SIGNATURE

P.E. NUMBER

DATE

MAINE KENNEBEC BRIDGE
KENNEBEC RIVER
RICHMOND, SAGADAHOC CTY. DRESDEN, LINCOLN CTY.

PIER NO. 2 SECTIONS

SHEET NUMBER

116

OF 238

Filename: ...\BRIDGE\MSTA\116_Pier2_sect.dgn Division: BRIDGE Username: dana.damren Date:3/27/2013

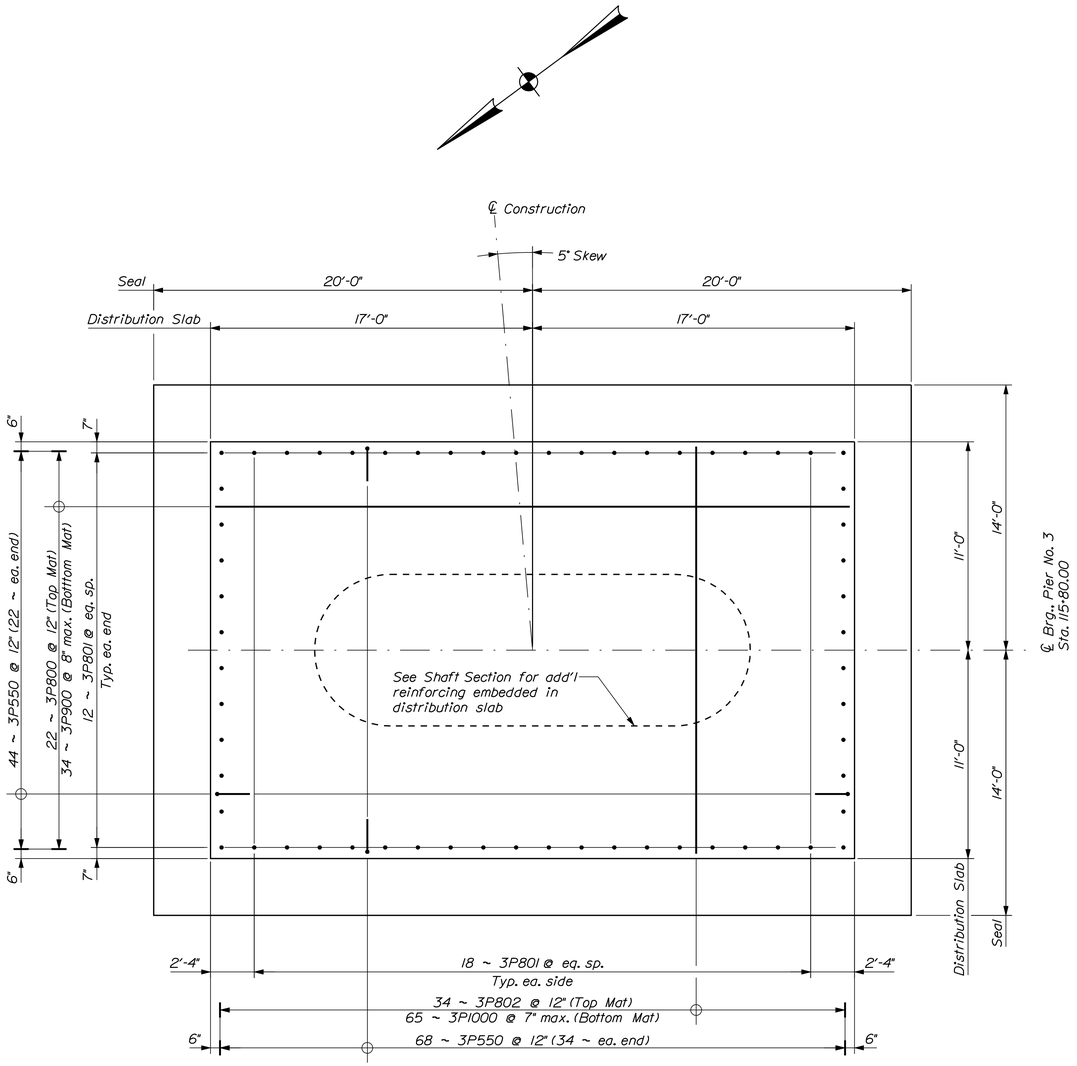

PIER NO. 3 SEAL & DISTRIBUTION SLAB PLAN

Flow

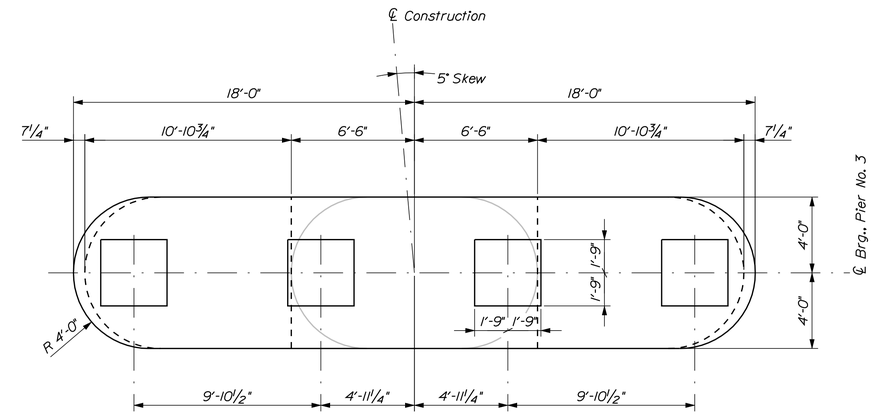

PIER NO. 3 CAP PLAN

Flow

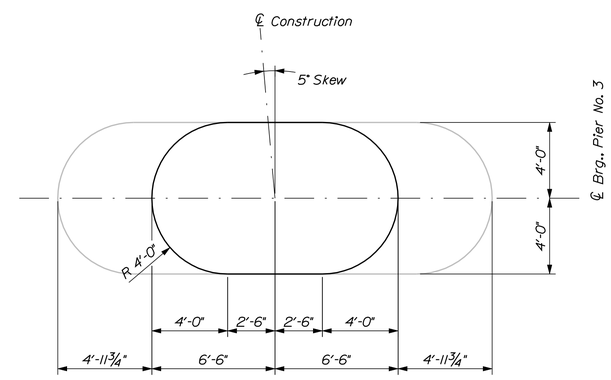

PIER NO. 3 SHAFT TOP PLAN

@ El. 65.70

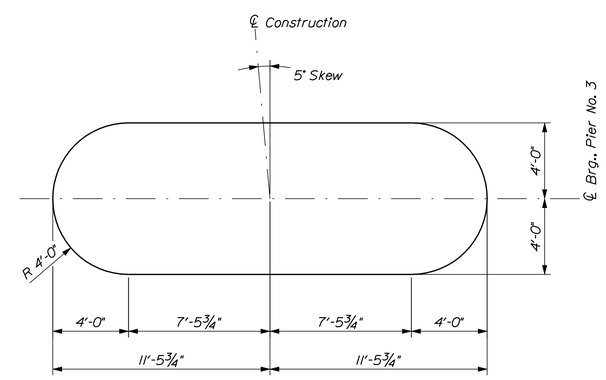

PIER NO. 3 SHAFT BASE PLAN

STATE OF MAINE
DEPARTMENT OF TRANSPORTATION

AC-BH-1267(400)

WIN 12674.00

BRIDGE NO. 2506

BRIDGE PLANS

		BY	DATE
PROJ. MANAGER	N. Benoit		
DESIGN-DETAILED	R. Noous	B. Nichols	Jan 2013
CHECKED-REVIEWED	E. Caswell	------	Jan 2013
DESIGN2-DETAILED2	------	------	------
DESIGN3-DETAILED3	------	------	------
REVISIONS 1	------	------	------
REVISIONS 2	------	------	------
REVISIONS 3	------	------	------
REVISIONS 4	------	------	------
FIELD CHANGES	------	------	------

SIGNATURE

P.E. NUMBER

DATE

MAINE KENNEBEC BRIDGE
KENNEBEC RIVER
RICHMOND, SAGADAHOC CTY. DRESDEN, LINCOLN CTY.

PIER NO. 3 PLAN

SHEET NUMBER

117

OF 238

Filename: ...\BRIDGE\MSTA\117_Pier3_plan.dgn Division: BRIDGE Username: dana.damren Date:3/27/2013

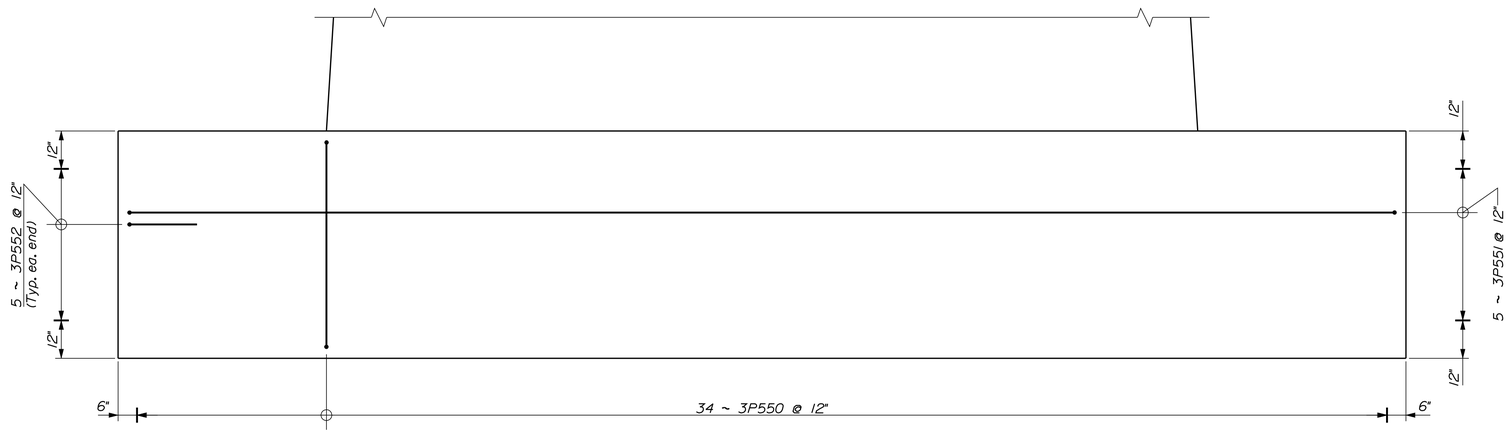

TYPICAL DISTRIBUTION SLAB ELEVATION

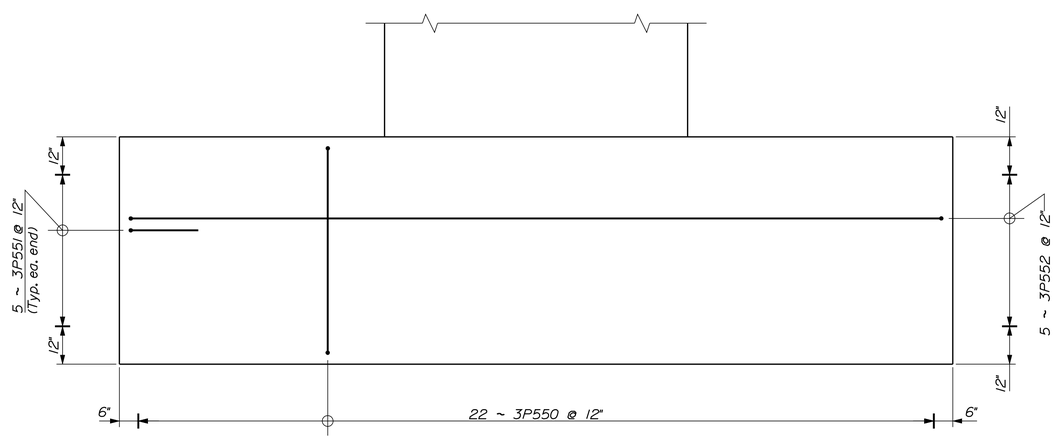

TYPICAL DISTRIBUTION SLAB END ELEVATION

Filename: ...\MSTA\118_Pier3_slobelev.dgn Division: BRIDGE Username: dana.damren Date:3/27/2013

STATE OF MAINE
DEPARTMENT OF TRANSPORTATION

AC-BH-1267(400)

WIN 12674.00

BRIDGE NO. 2506 BRIDGE PLANS

PROJ. MANAGER	N. Benoit		
DESIGN-DETAILED	R. Noous	B. Nichols	Jan 2013
CHECKED-REVIEWED	E. Caswell	------	Jan 2013
DESIGN2-DETAILED2	------	------	------
DESIGN3-DETAILED3	------	------	------
REVISIONS 1	------	------	------
REVISIONS 2	------	------	------
REVISIONS 3	------	------	------
REVISIONS 4	------	------	------
FIELD CHANGES	------	------	------

SIGNATURE

P.E. NUMBER

DATE

MAINE KENNEBEC BRIDGE
KENNEBEC RIVER
RICHMOND, SAGADAHOC CTY. DRESDEN, LINCOLN CTY.

PIER NO. 3 SLAB ELEVATIONS

SHEET NUMBER

118

OF 238

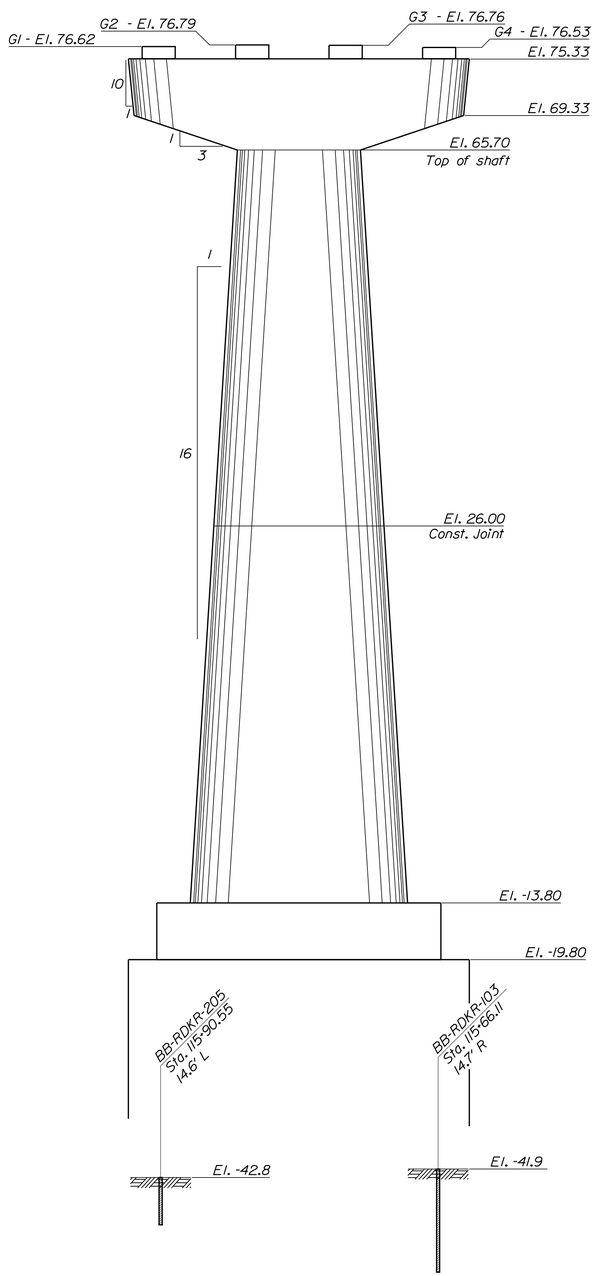

PIER NO. 3 ELEVATION

Flow

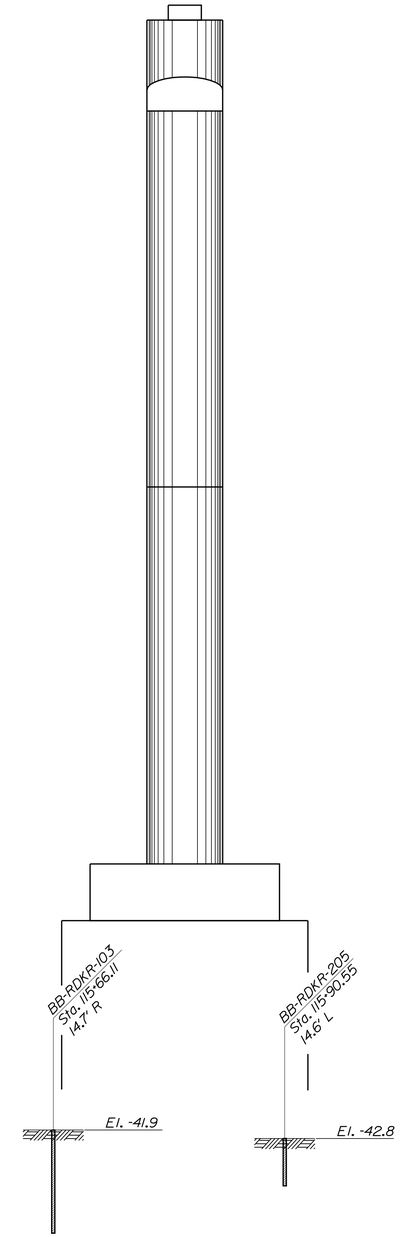

PIER NO. 3 END ELEVATION

STATE OF MAINE
DEPARTMENT OF TRANSPORTATION

AC-BH-1267(400)

WIN 12674.00

BRIDGE NO. 2506

BRIDGE PLANS

PROJ. MANAGER	N. Benoit	BY	DATE
DESIGN-DETAILED	R. Noous	B. Nichols	Jan 2013
CHECKED-REVIEWED	E. Caswell	------	Jan 2013
DESIGN2-DETAILED2	------	------	------
DESIGN3-DETAILED3	------	------	------
REVISIONS 1	------	------	------
REVISIONS 2	------	------	------
REVISIONS 3	------	------	------
REVISIONS 4	------	------	------
FIELD CHANGES	------	------	------

SIGNATURE

P.E. NUMBER

DATE

MAINE KENNEBEC BRIDGE
KENNEBEC RIVER
RICHMOND, SAGADAHOC CTY. DRESDEN, LINCOLN CTY.

PIER NO. 3 ELEVATIONS

SHEET NUMBER

119

OF 238

Filename: ...\BRIDGE\MSTA\119_Pier3_elev.dgn Division: BRIDGE Username: dana.damren Date:3/27/2013

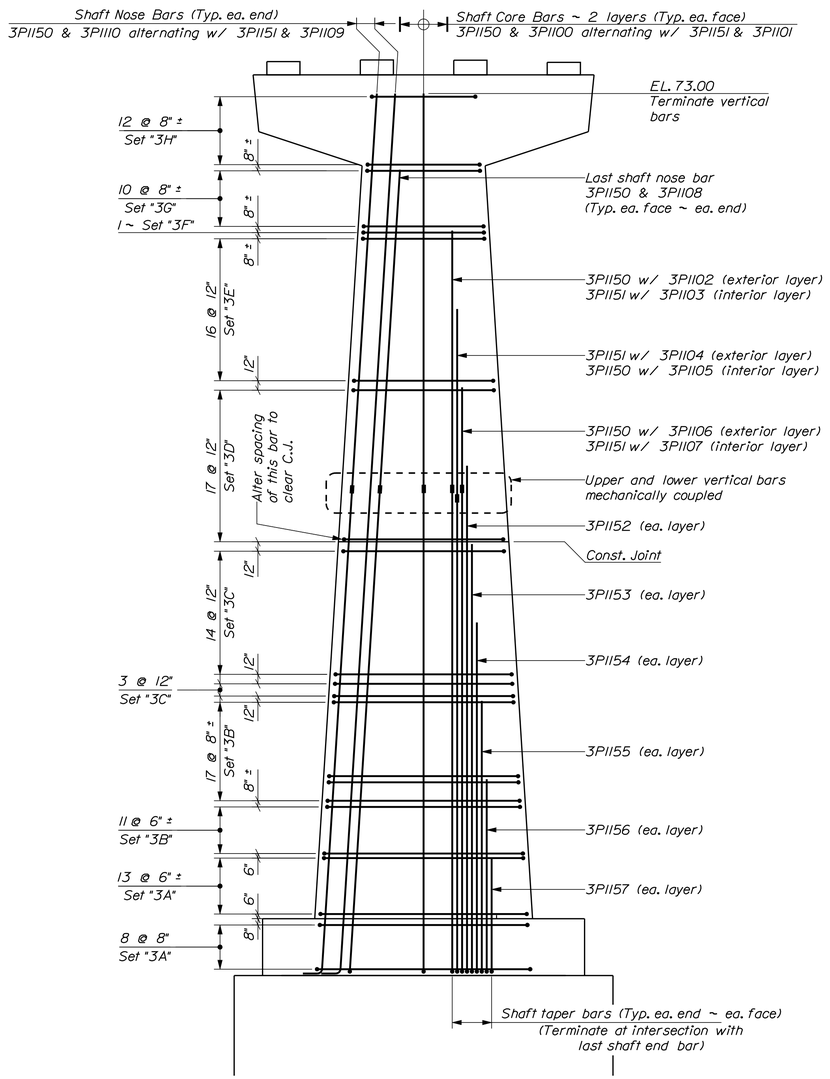

PIER NO. 3 SHAFT REINFORCING

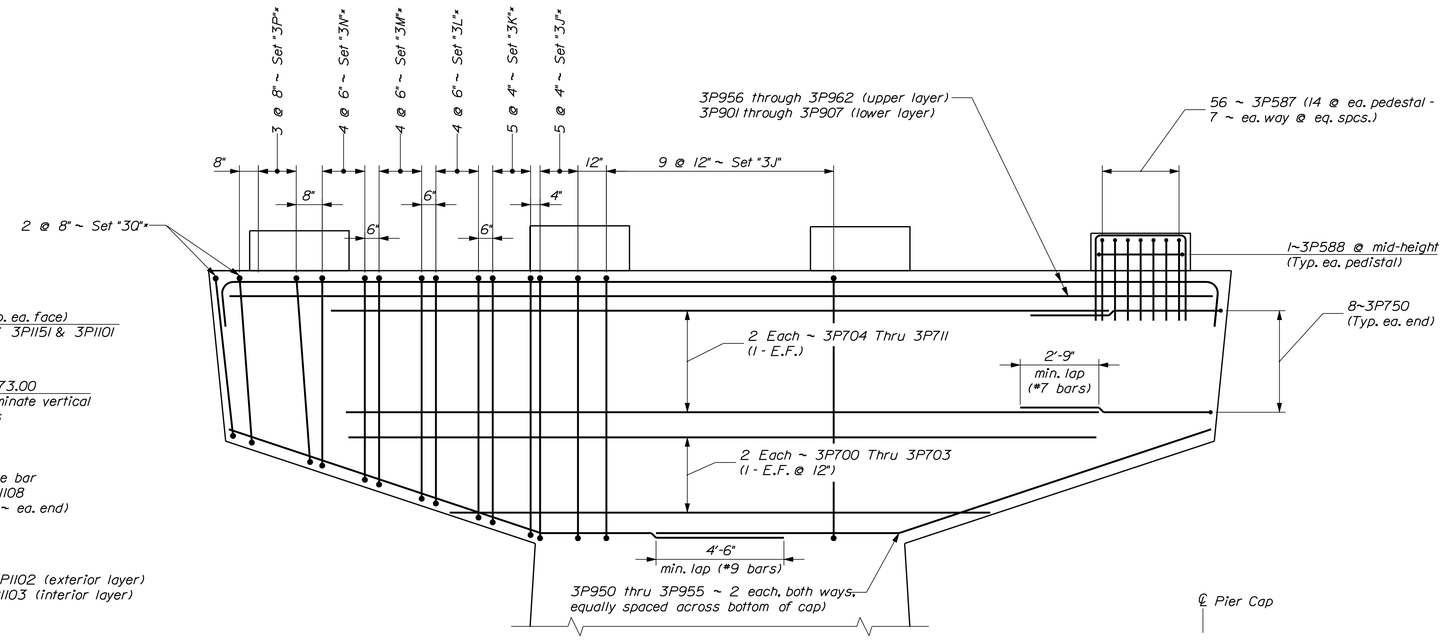

PIER NO. 3 CAP REINFORCING

Sets with "*" are typical both ends of cap

PIER NO. 3 REINFORCING STEEL SET SCHEDULE			
Set	Qty	Location	Bar Designations
3A	21	Pier Shaft	15 ~ 3P553, 2 ~ 3P554, 2 ~ 3P555, 2 ~ 3P556, 2 ~ 3P557, 8 ~ 3P558, 2 ~ 3P562, 2 ~ 3P568
3B	28	Pier Shaft	13 ~ 3P553, 2 ~ 3P554, 2 ~ 3P555, 2 ~ 3P556, 2 ~ 3P557, 8 ~ 3P558, 2 ~ 3P563, 2 ~ 3P569
3C	17	Pier Shaft	11 ~ 3P553, 2 ~ 3P554, 2 ~ 3P555, 2 ~ 3P556, 2 ~ 3P557, 8 ~ 3P558, 2 ~ 3P564, 2 ~ 3P570
3D	17	Pier Shaft	9 ~ 3P553, 2 ~ 3P554, 2 ~ 3P555, 2 ~ 3P556, 2 ~ 3P557, 8 ~ 3P558, 2 ~ 3P565, 2 ~ 3P571
3E	16	Pier Shaft	7 ~ 3P553, 2 ~ 3P554, 2 ~ 3P555, 2 ~ 3P556, 2 ~ 3P557, 8 ~ 3P558, 2 ~ 3P566, 2 ~ 3P572
3F	1	Pier Shaft	7 ~ 3P553, 2 ~ 3P554, 2 ~ 3P555, 2 ~ 3P556, 12 ~ 3P559, 2 ~ 3P566
3G	10	Pier Shaft	5 ~ 3P553, 2 ~ 3P554, 2 ~ 3P555, 2 ~ 3P556, 12 ~ 3P560, 2 ~ 3P567.
3H	12	Pier Shaft	5 ~ 3P553, 2 ~ 3P555, 2 ~ 3P556, 12 ~ 3P561, 2 ~ 3P567.
3J	19	Pier Cap Stirrup	4 ~ 3P573, 2 ~ 3P580
3K	10	Pier Cap Stirrup	4 ~ 3P574, 2 ~ 3P581
3L	8	Pier Cap Stirrup	4 ~ 3P579, 2 ~ 3P582
3M	8	Pier Cap Stirrup	4 ~ 3P576, 2 ~ 3P583
3N	8	Pier Cap Stirrup	4 ~ 3P577, 2 ~ 3P584
3P	6	Pier Cap Stirrup	4 ~ 3P578, 2 ~ 3P585

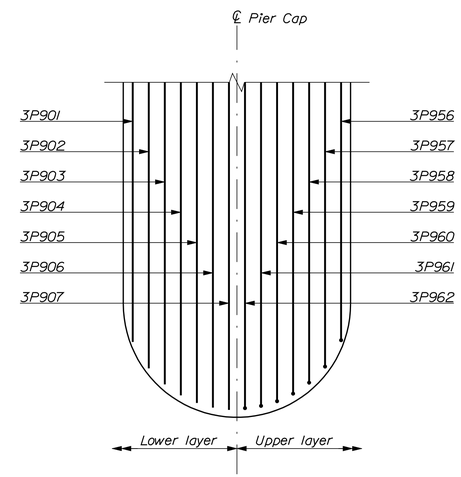

TOP OF PIER CAP REINFORCING

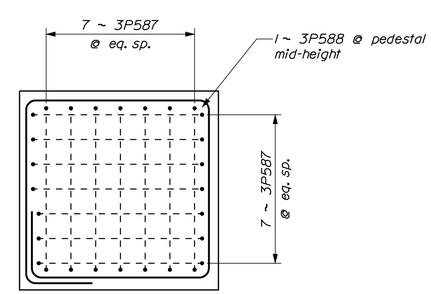

BEARING PEDESTAL REINFORCING

STATE OF MAINE
DEPARTMENT OF TRANSPORTATION

AC-BH-1267(400)

WIN 12674.00

BRIDGE NO. 2506

BRIDGE PLANS

PROJ. MANAGER	N. Benoit	BY	DATE		
DESIGN-DETAILED	R. Noyes	B. Nichols	Jan 2013	SIGNATURE	
CHECKED-REVIEWED	E. Caswell	------	Jan 2013		
DESIGN2-DETAILED2	------	------	------	P.E. NUMBER	
DESIGN3-DETAILED3	------	------	------		
REVISIONS 1	------	------	------	DATE	
REVISIONS 2	------	------	------		
REVISIONS 3	------	------	------		
REVISIONS 4	------	------	------		
FIELD CHANGES	------	------	------		

MAINE KENNEBEC BRIDGE
KENNEBEC RIVER
RICHMOND, SAGADAHOC CTY. DRESDEN, LINCOLN CTY.

PIER NO. 3 REINFORCING

SHEET NUMBER
120
OF 238

Filename: ...\MSTA\120_Pier3_reinf.dgn Division: BRIDGE Username: dana.damren Date:3/27/2013

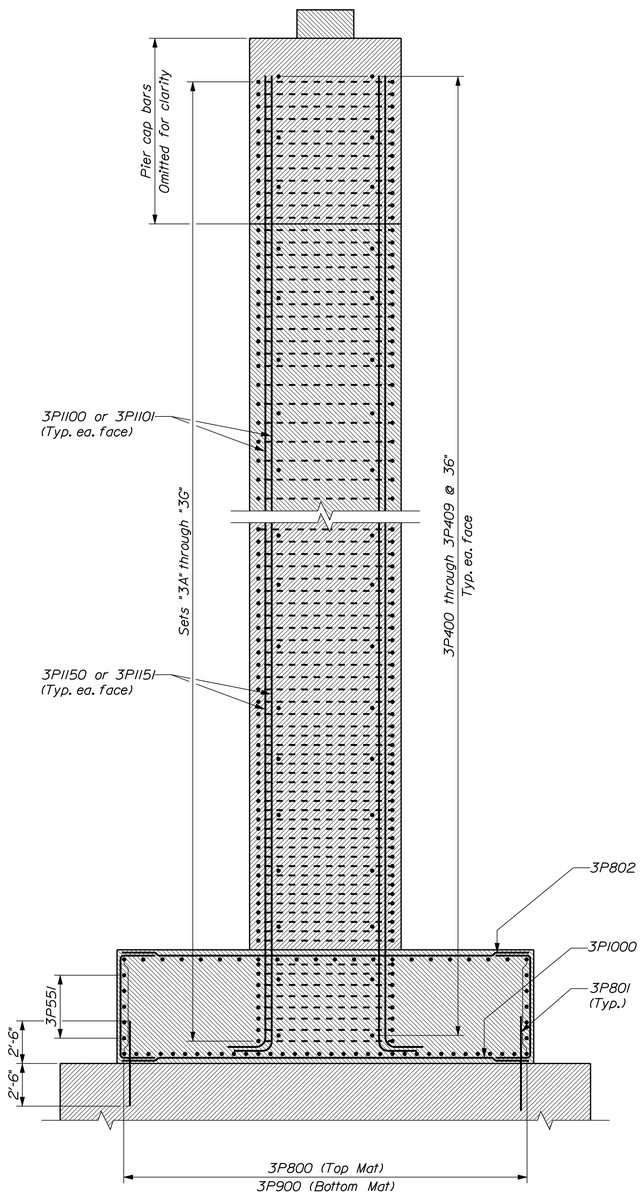

PIER NO. 3 SECTION

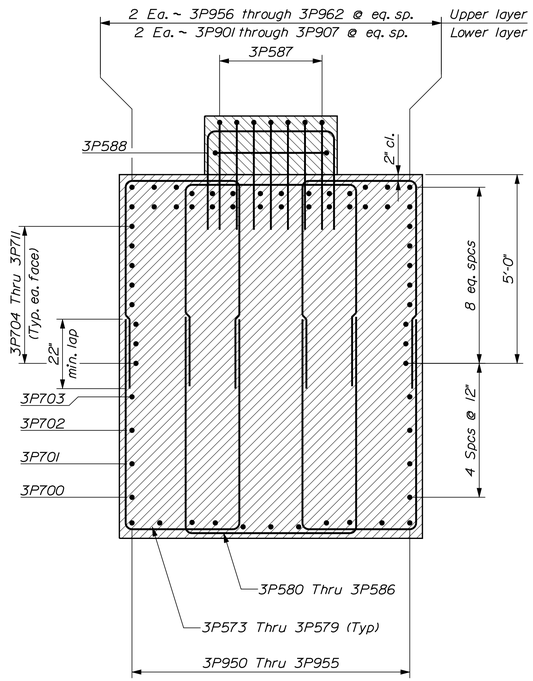

CAP CANTILEVER SECTION

Set "3J" Shown

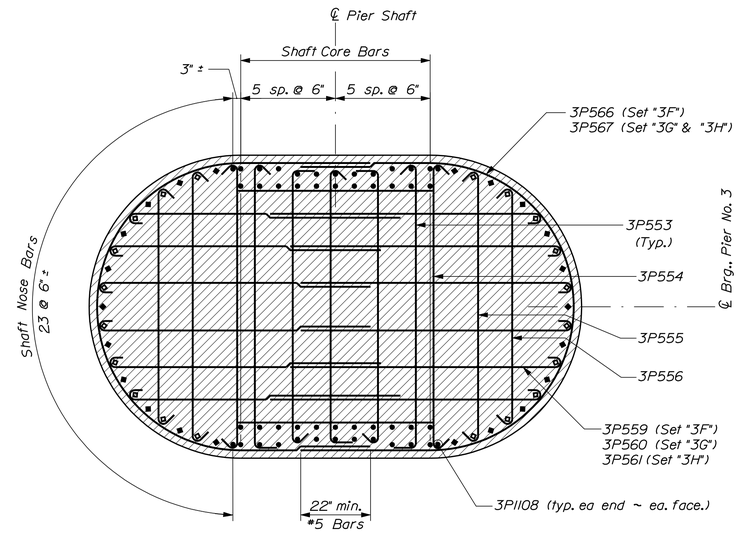

HORIZONTAL SECTION AT SHAFT TOP

90 vertical bars ~ Sets "3F" through "3H" shown

∘ = 3P1100 ◇ = 3P1110

• = 3P1101 (unless noted) ◆ = 3P1109

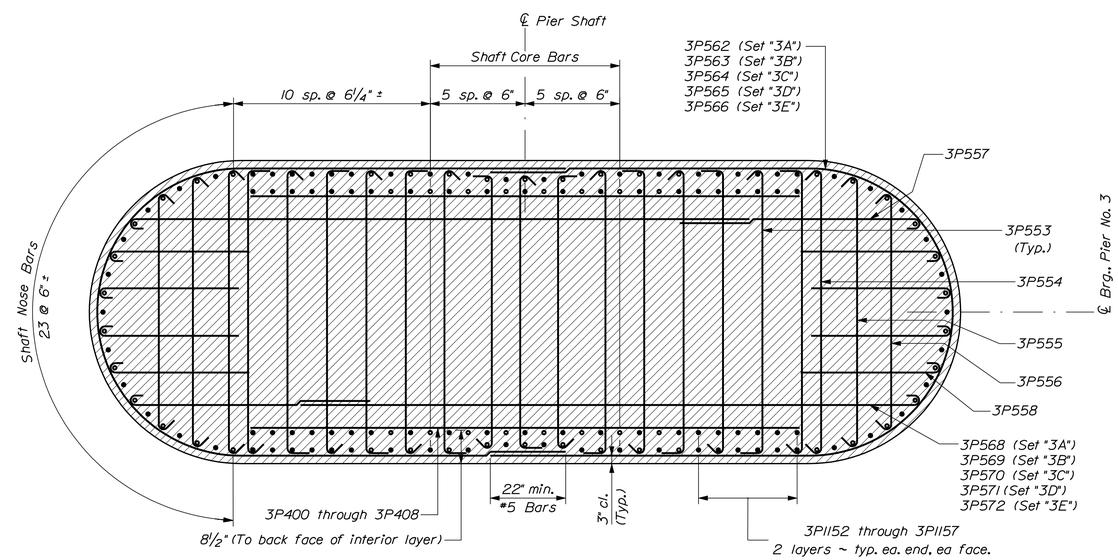

HORIZONTAL SECTION AT SHAFT BASE

162 vertical bars ~ Sets "3A" through "3E" shown

∘ = 3P1150

• = 3P1151 (unless noted)

STATE OF MAINE
DEPARTMENT OF TRANSPORTATION

AC-BH-1267(400)

WIN 12674.00

BRIDGE NO. 2506

BRIDGE PLANS

		BY	DATE
PROJ. MANAGER	N. Benoit		
DESIGN-DETAILED	R. Nadeau	B. Nichols	Jan 2013
CHECKED-REVIEWED	E. Caswell		Jan 2013
DESIGN2-DETAILED2			
DESIGN3-DETAILED3			
REVISIONS 1			
REVISIONS 2			
REVISIONS 3			
REVISIONS 4			
FIELD CHANGES			

SIGNATURE

P.E. NUMBER

DATE

MAINE KENNEBEC BRIDGE
KENNEBEC RIVER
RICHMOND, SAGADAHOC CTY. DRESDEN, LINCOLN CTY.

PIER NO. 3 SECTIONS

SHEET NUMBER

121

OF 238

Filename: ...\BRIDGE\MSTA\121_Pier3_sect.dgn Division: BRIDGE Username: dana.damren Date:3/27/2013

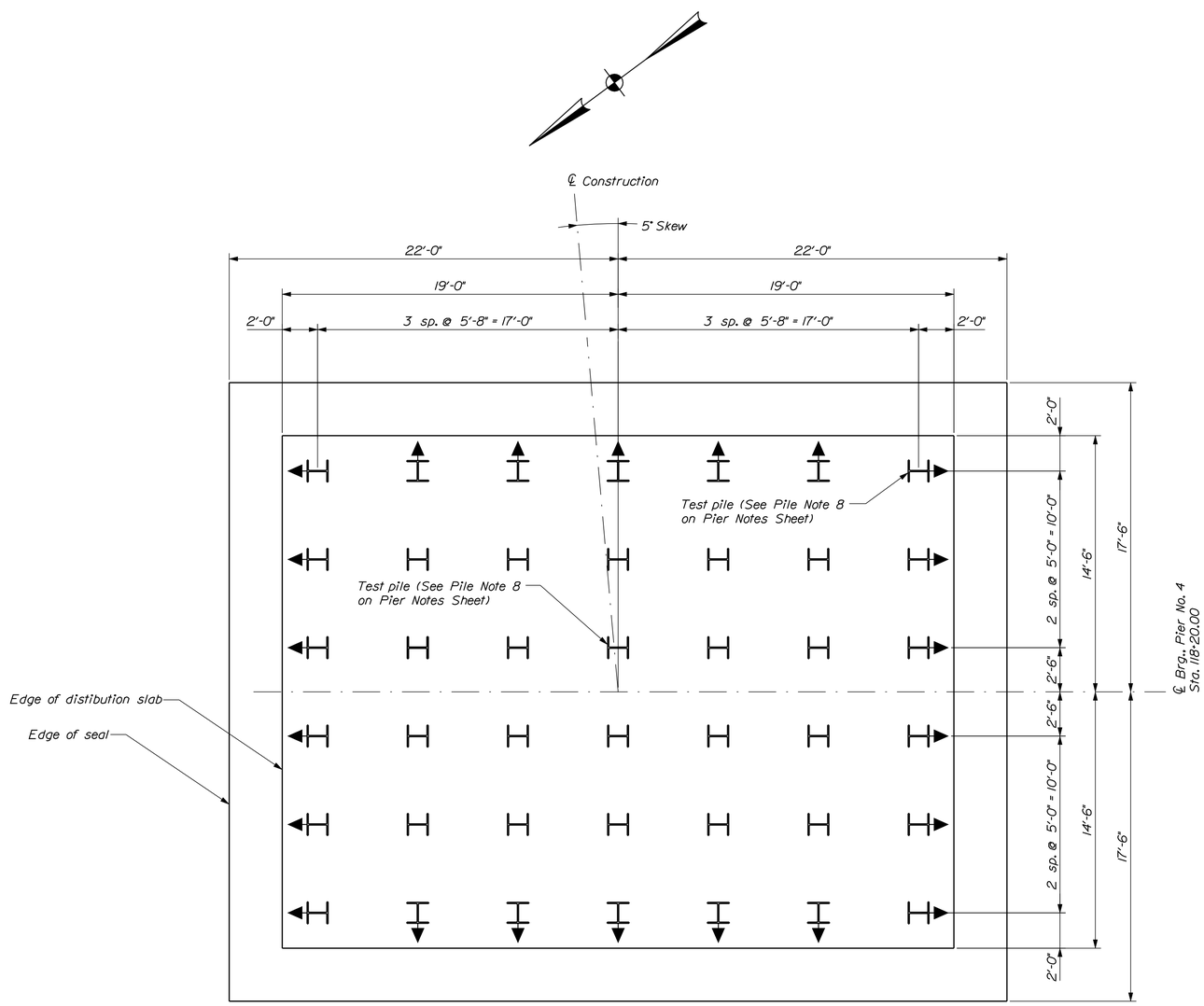

PIER NO. 4 SEAL & DISTRIBUTION SLAB PLAN

Arrow on pile indicates direction of 1:10 batter.

Flow

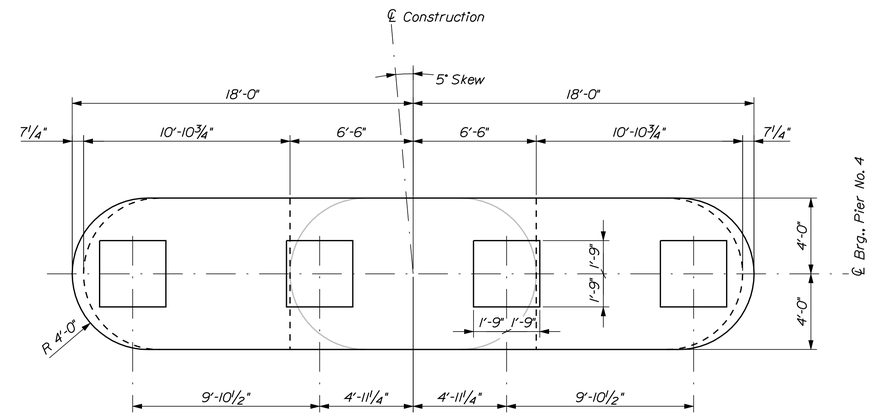

PIER NO. 4 CAP PLAN

Flow

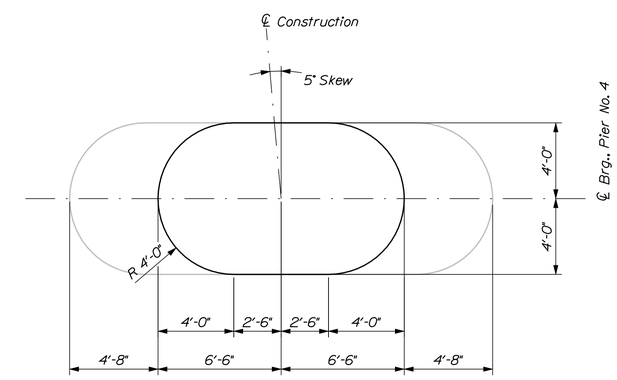

PIER NO. 4 SHAFT TOP PLAN

@ EL. 65.70

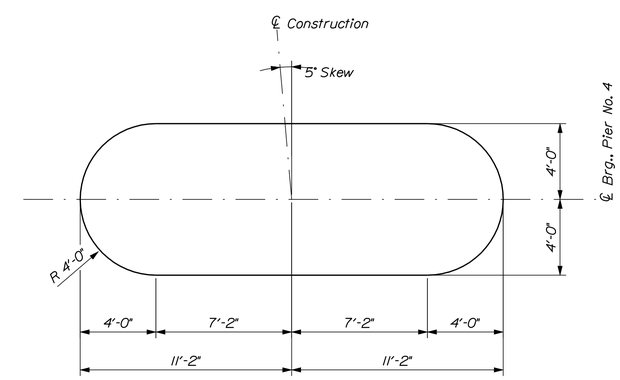

PIER NO. 4 SHAFT BASE PLAN

STATE OF MAINE
DEPARTMENT OF TRANSPORTATION

AC-BH-1267(400)

WIN 12674.00

BRIDGE NO. 2506

BRIDGE PLANS

PROJ. MANAGER	N. Benoit	BY	DATE
DESIGN-DETAILED	R. Noous	B. Nichols	Jan 2013
CHECKED-REVIEWED	E. Caswell	------	Jan 2013
DESIGN2-DETAILED2	------	------	------
DESIGN3-DETAILED3	------	------	------
REVISIONS 1	------	------	------
REVISIONS 2	------	------	------
REVISIONS 3	------	------	------
REVISIONS 4	------	------	------
FIELD CHANGES	------	------	------

SIGNATURE

P.E. NUMBER

DATE

MAINE KENNEBEC BRIDGE
KENNEBEC RIVER
RICHMOND, SAGADAHOC CTY. DRESDEN, LINCOLN CTY.

PIER NO. 4 PLAN

SHEET NUMBER

122

OF 238

Filename: ...\BRIDGE\MSTA\122_Pier4_plan.dgn Division: BRIDGE Username: dana.damren Date:3/27/2013

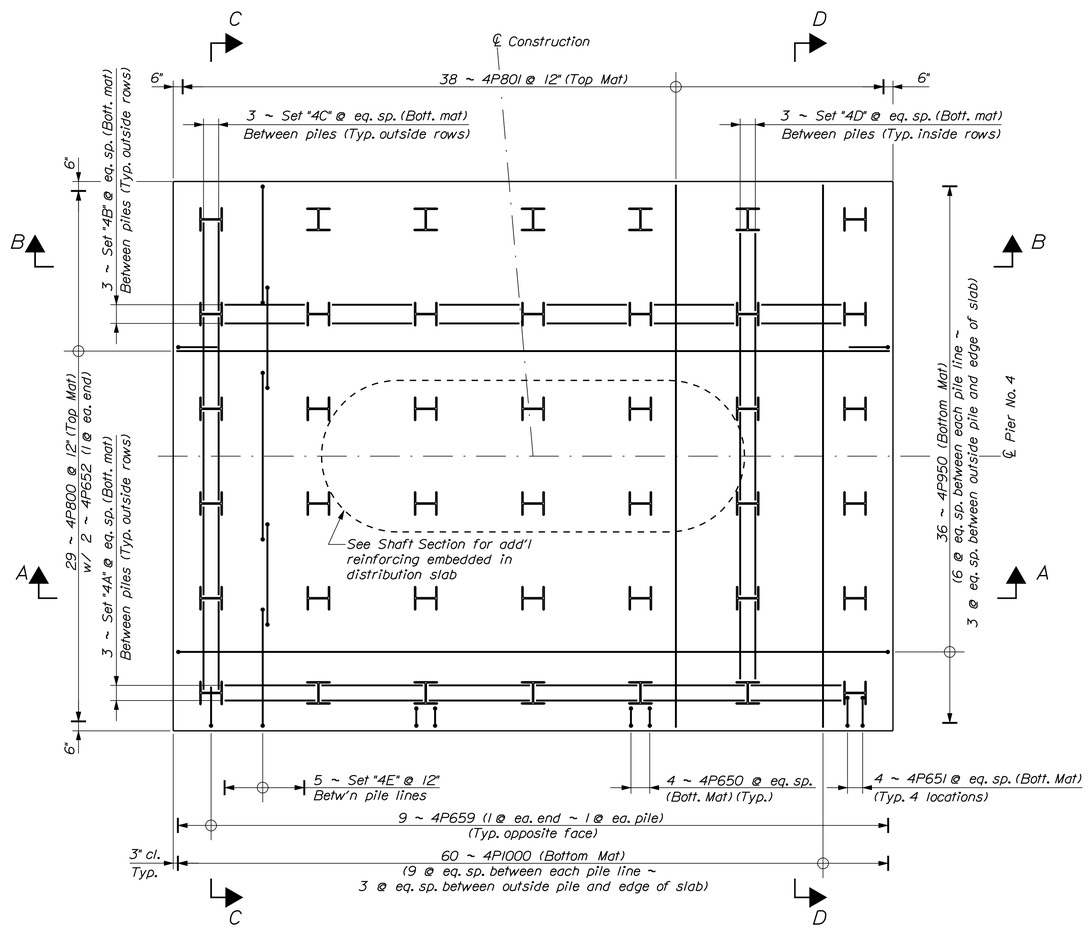

PIER NO. 4 DISTRIBUTION SLAB REINFORCING PLAN

See Pier No. 4 Reinforcing Sheet for reinforcing steel set schedule

PROJ. MANAGER	N. Benoit	BY	DATE
DESIGN-DETAILED	R. Noous	B. Nichols	Jan 2013
CHECKED-REVIEWED	E. Caswell	------	Jan 2013
DESIGN2-DETAILED2	------	------	------
DESIGN3-DETAILED3	------	------	------
REVISIONS 1	------	------	------
REVISIONS 2	------	------	------
REVISIONS 3	------	------	------
REVISIONS 4	------	------	------
FIELD CHANGES	------	------	------

SIGNATURE

P.E. NUMBER

DATE

STATE OF MAINE
DEPARTMENT OF TRANSPORTATION

AC-BH-1267(400)

WIN 12674.00

BRIDGE NO. 2506

BRIDGE PLANS

MAINE KENNEBEC BRIDGE
KENNEBEC RIVER
RICHMOND, SAGADAHOC CTY. DRESDEN, LINCOLN CTY.

PIER NO. 4 DISTRIBUTION SLAB
REINFORCING PLAN

SHEET NUMBER

123

OF 238

Filename: ...\MSTA\123_Pier_4_slabreinf.dgn Division: BRIDGE Username: dana.damren Date:3/27/2013

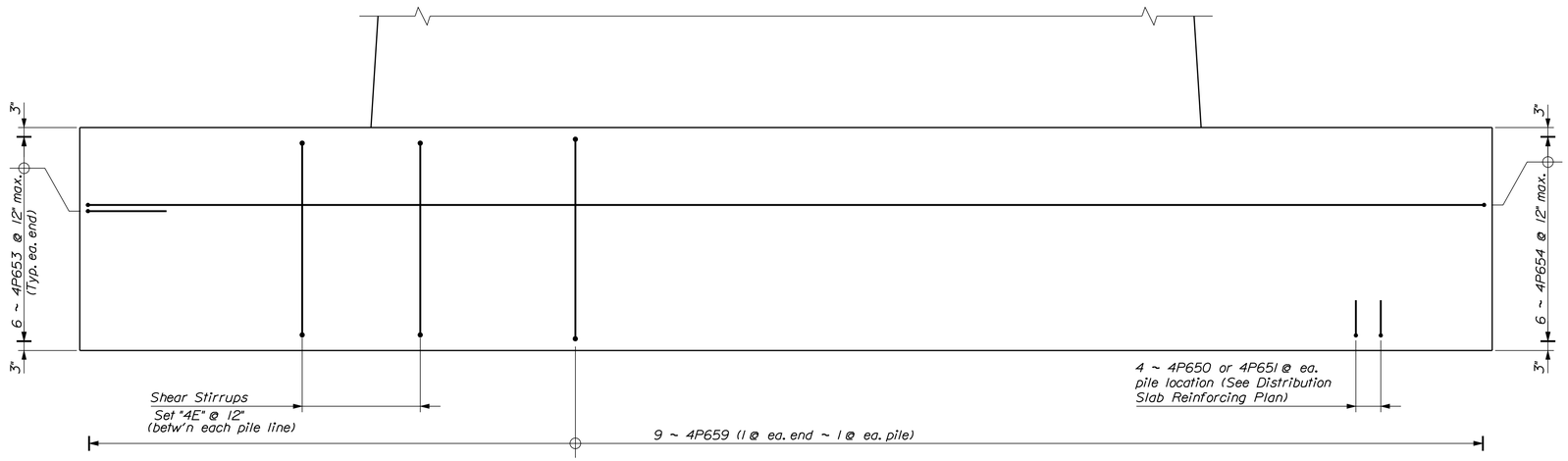

TYPICAL DISTRIBUTION SLAB ELEVATION

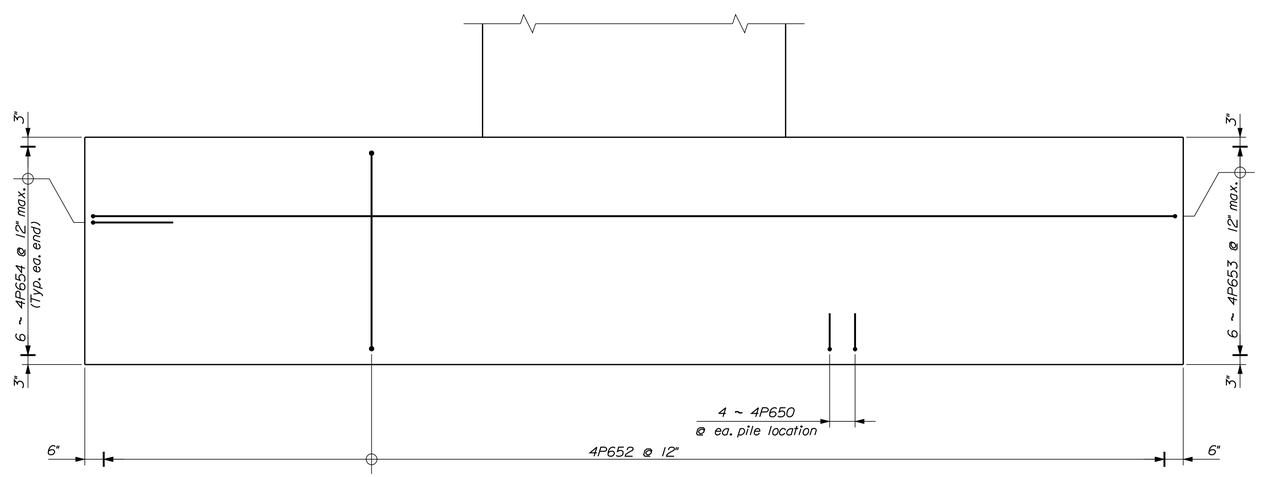

TYPICAL DISTRIBUTION SLAB END ELEVATION

STATE OF MAINE
DEPARTMENT OF TRANSPORTATION

AC-BH-1267(400)

WIN 12674.00

BRIDGE NO. 2506

BRIDGE PLANS

PROJ. MANAGER	N. Benoit	BY	DATE
DESIGN-DETAILED	R. Noous	B. Nichols	Jan 2013
CHECKED-REVIEWED	E. Caswell	------	Jan 2013
DESIGN2-DETAILED2	------	------	------
DESIGN3-DETAILED3	------	------	------
REVISIONS 1	------	------	------
REVISIONS 2	------	------	------
REVISIONS 3	------	------	------
REVISIONS 4	------	------	------
FIELD CHANGES	------	------	------

SIGNATURE

P.E. NUMBER

DATE

MAINE KENNEBEC BRIDGE
KENNEBEC RIVER
RICHMOND, SAGADAHOC CTY. DRESDEN, LINCOLN CTY.

PIER NO. 4 DISTRIBUTION
SLAB ELEVATIONS

SHEET NUMBER

124

OF 238

Filename: ...\MSTA\124_Pier4_slabelev.dgn Division: BRIDGE Username: dana.damren Date:3/27/2013

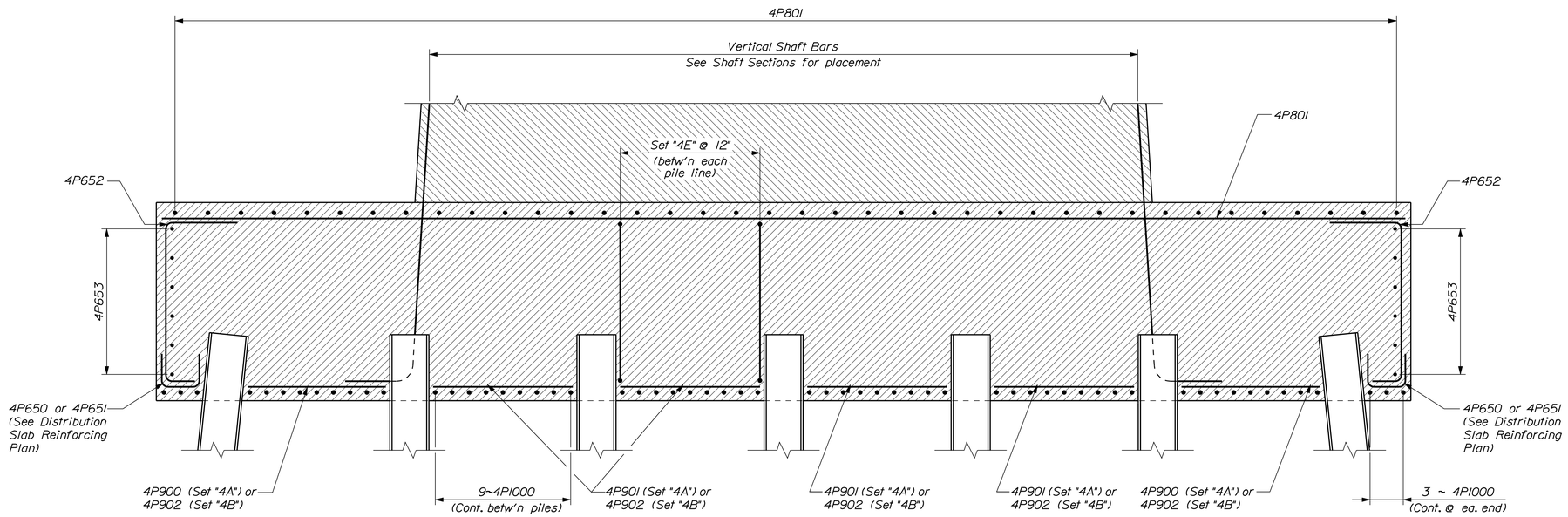

DISTRIBUTION SLAB SECTION "A-A"

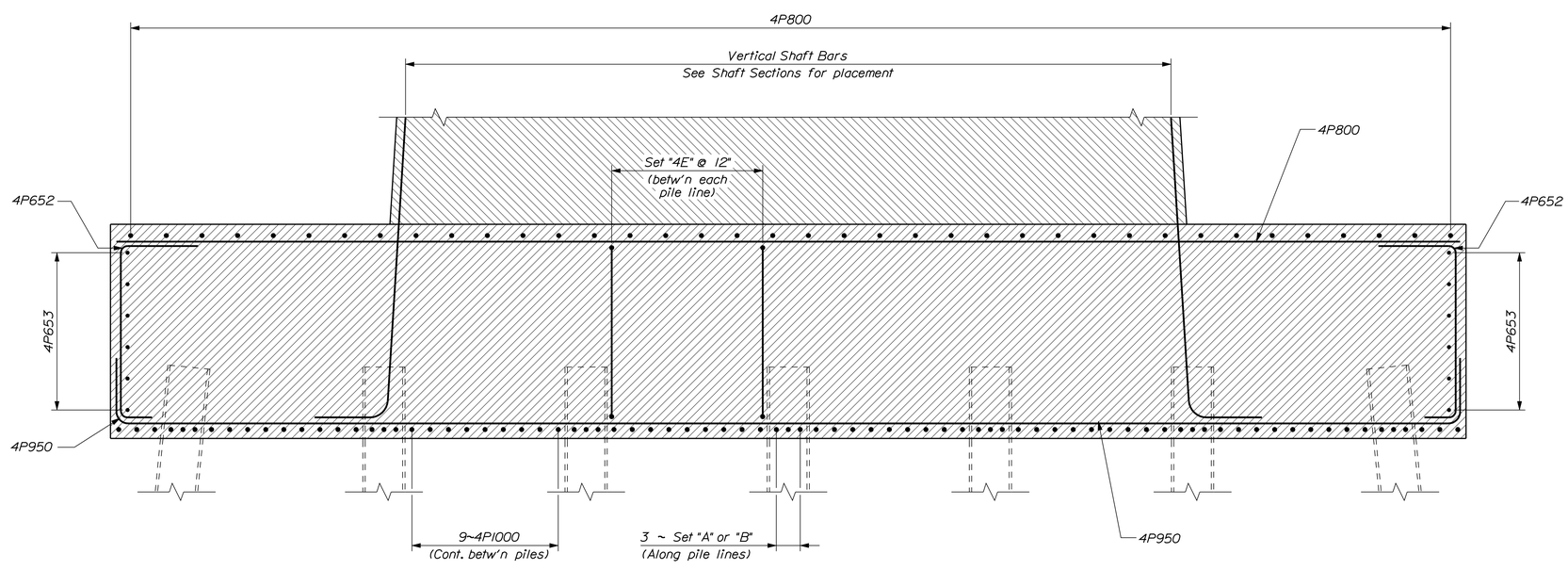

DISTRIBUTION SLAB SECTION "B-B"

STATE OF MAINE
DEPARTMENT OF TRANSPORTATION

AC-BH-1267(400)

WIN 12674.00

BRIDGE NO. 2506

BRIDGE PLANS

PROJ. MANAGER	N. Benoit	BY	DATE	
DESIGN-DETAILED	R. Noous	B. Nichols	Jan 2013	SIGNATURE
CHECKED-REVIEWED	E. Caswell	------	Jan 2013	
DESIGN2-DETAILED2	------	------	------	P.E. NUMBER
DESIGN3-DETAILED3	------	------	------	
REVISIONS 1	------	------	------	DATE
REVISIONS 2	------	------	------	
REVISIONS 3	------	------	------	
REVISIONS 4	------	------	------	
FIELD CHANGES	------	------	------	

MAINE KENNEBEC BRIDGE
KENNEBEC RIVER
RICHMOND, SAGADAHOC CTY. DRESDEN, LINCOLN CTY.

PIER NO. 4 DISTRIBUTION
SLAB SECTIONS

SHEET NUMBER
125
OF 238

Filename: ...\MSTA\125_Pier4_slabsect1.dgn Division: BRIDGE Username: dana.damren Date:3/27/2013

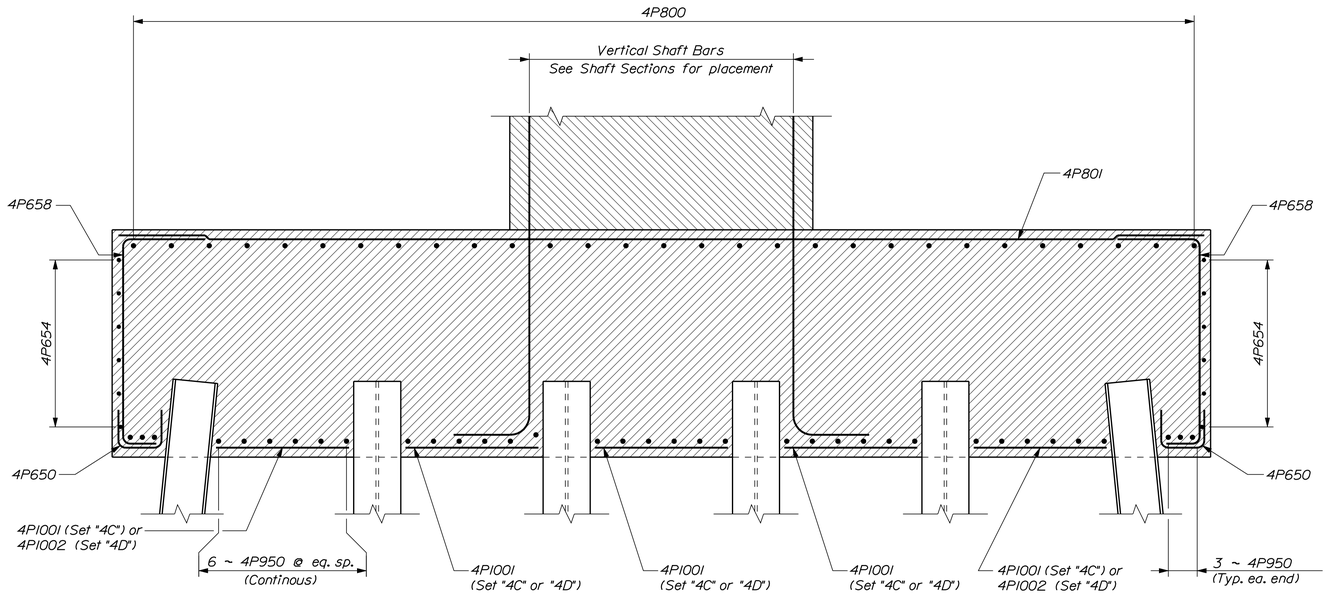

DISTRIBUTION SLAB SECTION "C-C"

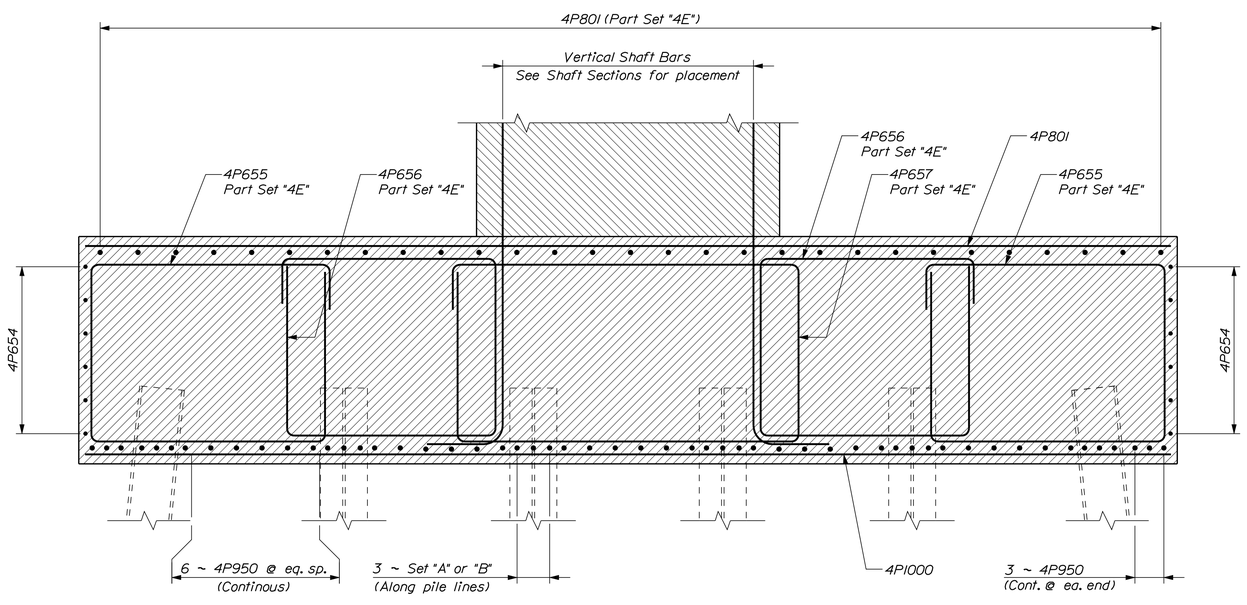

DISTRIBUTION SLAB SECTION "D-D"

STATE OF MAINE
DEPARTMENT OF TRANSPORTATION

AC-BH-1267(400)

WIN 12674.00

BRIDGE NO. 2506

BRIDGE PLANS

PROJ. MANAGER	N. Benoit	BY	DATE
DESIGN-DETAILED	R. Noous	B. Nichols	Jan 2013
CHECKED-REVIEWED	E. Caswell	------	Jan 2013
DESIGN2-DETAILED2	------	------	------
DESIGN3-DETAILED3	------	------	------
REVISIONS 1	------	------	------
REVISIONS 2	------	------	------
REVISIONS 3	------	------	------
REVISIONS 4	------	------	------
FIELD CHANGES	------	------	------

SIGNATURE

P.E. NUMBER

DATE

MAINE KENNEBEC BRIDGE
KENNEBEC RIVER
RICHMOND, SAGADAHOC CTY. DRESDEN, LINCOLN CTY.

PIER NO. 4 DISTRIBUTION
SLAB SECTIONS

SHEET NUMBER

126

OF 238

Filename: ...\MSTA\126_Pier4_slabsect2.dgn Division: BRIDGE Username: dana.damren Date:3/27/2013

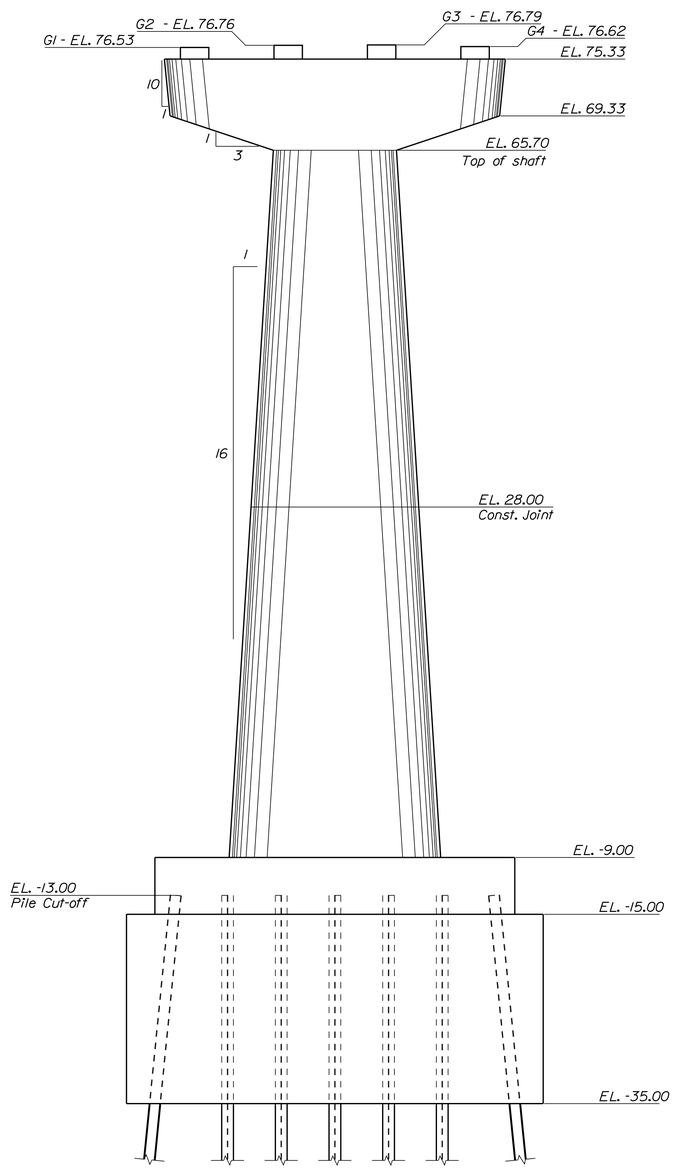

PIER NO. 4 ELEVATION

Flow

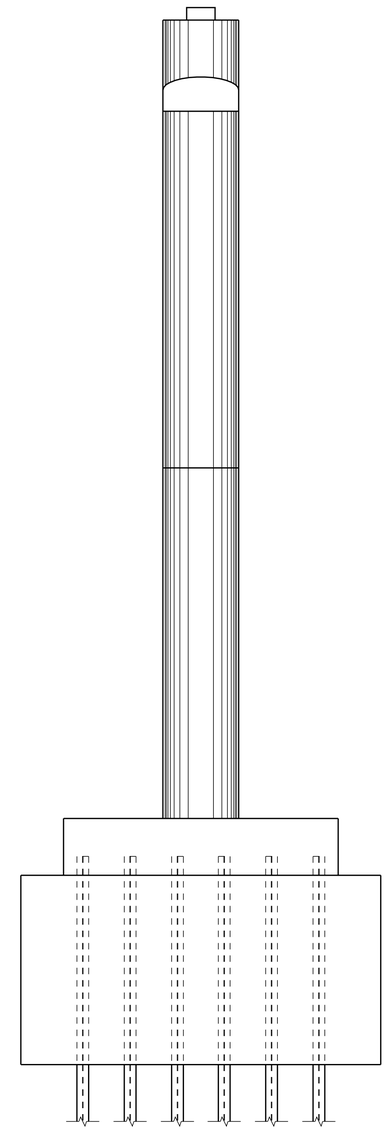

PIER NO. 4 END ELEVATION

STATE OF MAINE
DEPARTMENT OF TRANSPORTATION

AC-BH-1267(400)

WIN 12674.00

BRIDGE NO. 2506

BRIDGE PLANS

PROJ. MANAGER	N. Benoit	BY	DATE
DESIGN-DETAILED	R. Noous	B. Nichols	Jan 2013
CHECKED-REVIEWED	E. Caswell	------	Jan 2013
DESIGN2-DETAILED2	------	------	------
DESIGN3-DETAILED3	------	------	------
REVISIONS 1	------	------	------
REVISIONS 2	------	------	------
REVISIONS 3	------	------	------
REVISIONS 4	------	------	------
FIELD CHANGES	------	------	------

SIGNATURE

P.E. NUMBER

DATE

MAINE KENNEBEC BRIDGE
KENNEBEC RIVER
RICHMOND, SAGADAHOC CTY. DRESDEN, LINCOLN CTY.

PIER NO. 4 ELEVATIONS

SHEET NUMBER

127

OF 238

Filename: ...\BRIDGE\MSTA\127_Pier4_elev.dgn Division: BRIDGE Username: dana.damren Date:3/27/2013

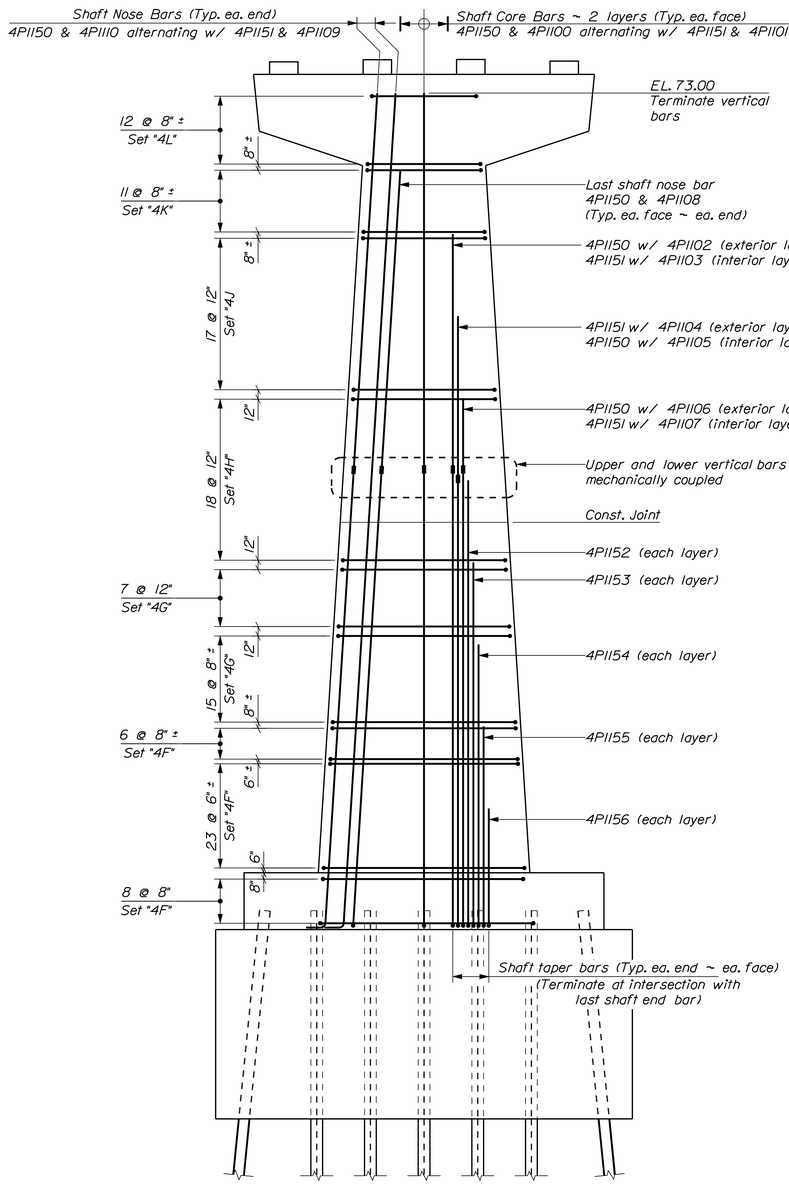

PIER NO. 4 SHAFT REINFORCING

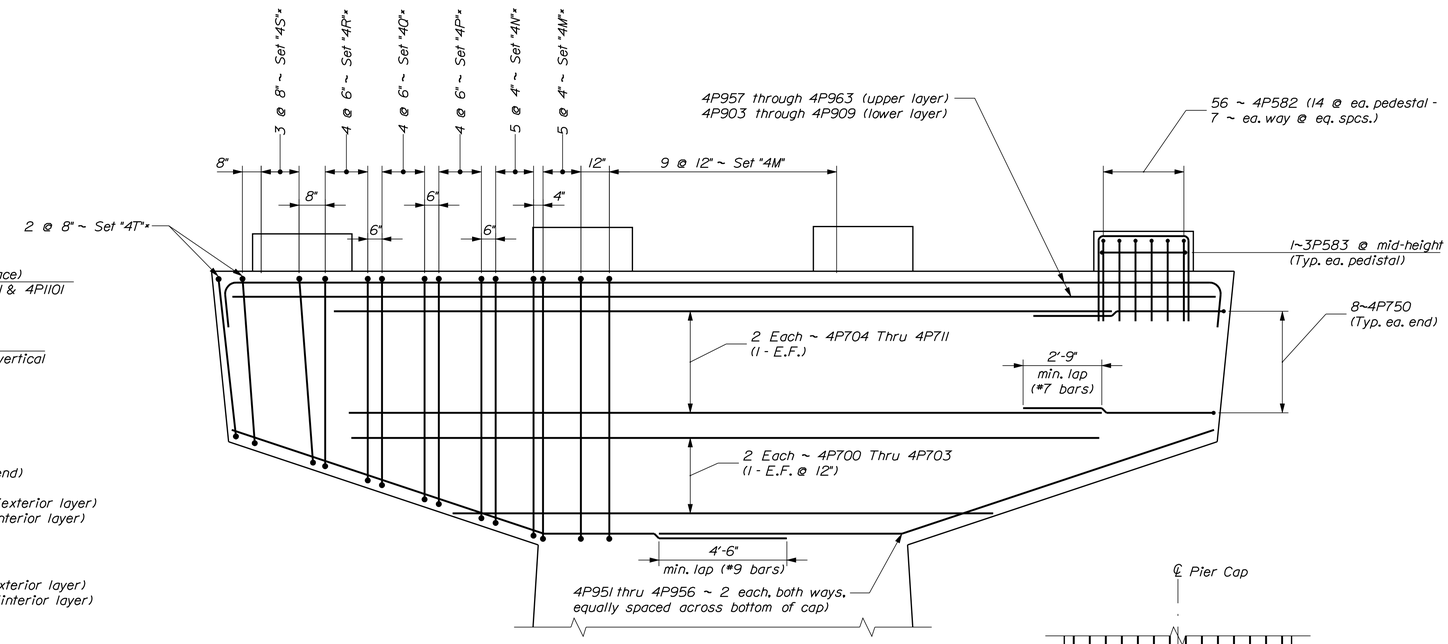

PIER NO. 4 CAP REINFORCING

Sets with "*" are typical both ends of cap

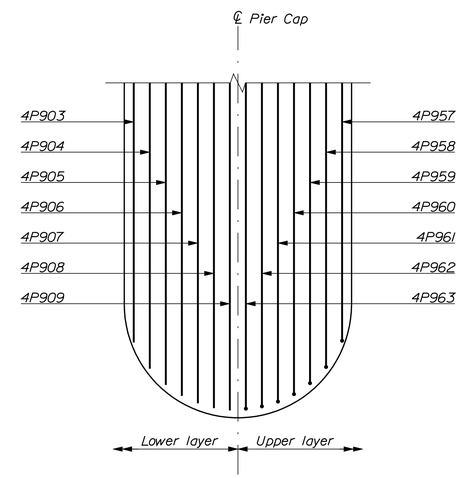

TOP OF PIER CAP REINFORCING

PIER NO. 4 REINFORCING STEEL SET SCHEDULE

Set	Qty	Location	Bar Designations
4A	6	Distribution Slab	2 ~ 4P900, 4 ~ 4P901,
4B	12	Distribution Slab	6 ~ 4P902
4C	6	Distribution Slab	5 ~ 4P1001
4D	15	Distribution Slab	2 ~ 4P1002, 3 ~ 4P1001
4E	30	Distribution Slab	2 ~ 4P655, 2 ~ 4P656, 1~ 4P657
4F	37	Pier Shaft	13 ~ 4P550, 2 ~ 4P551, 2 ~ 4P552, 2 ~ 4P553, 2 ~ 4P554, 8 ~ 4P555, 2 ~ 4P558, 2 ~ 4P564
4G	22	Pier Shaft	11~ 4P550, 2 ~ 4P551, 2 ~ 4P552, 2 ~ 4P553, 2 ~ 4P554, 8 ~ 4P555, 2 ~ 4P559, 2 ~ 4P565
4H	18	Pier Shaft	9 ~ 4P550, 2 ~ 4P551, 2 ~ 4P552, 2 ~ 4P553, 2 ~ 4P554, 8 ~ 4P555, 2 ~ 4P560, 2 ~ 4P566
4J	17	Pier Shaft	7 ~ 4P550, 2 ~ 4P551, 2 ~ 4P552, 2 ~ 4P553, 2 ~ 4P554, 8 ~ 4P555, 2 ~ 4P561, 2 ~ 4P567
4K	11	Pier Shaft	5 ~ 4P550, 2 ~ 4P551, 2 ~ 4P552, 2 ~ 4P553, 2 ~ 4P562, 12 ~ 4P566
4L	12	Pier Shaft	5 ~ 4P550, 2 ~ 4P552, 2 ~ 4P553, 2 ~ 4P563, 12 ~ 4P567
4M	19	Pier Cap Stirrup	4 ~ 4P568, 2 ~ 4P575
4N	10	Pier Cap Stirrup	4 ~ 4P569, 2 ~ 4P576
4P	8	Pier Cap Stirrup	4 ~ 4P570, 2 ~ 4P577
4Q	8	Pier Cap Stirrup	4 ~ 4P571, 2 ~ 4P578
4R	8	Pier Cap Stirrup	4 ~ 4P572, 2 ~ 4P579
4S	6	Pier Cap Stirrup	4 ~ 4P573, 2 ~ 4P580
4T	4	Pier Cap Stirrup	4 ~ 4P574, 2 ~ 4P581

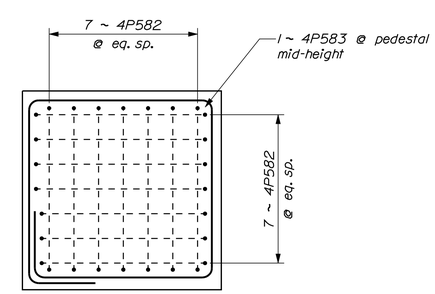

BEARING PEDESTAL REINFORCING

STATE OF MAINE
DEPARTMENT OF TRANSPORTATION

AC-BH-1267(400)

WIN 12674.00

BRIDGE NO. 2506

BRIDGE PLANS

		BY	DATE
PROJ. MANAGER	N. Benoit		
DESIGN-DETAILED	R. Noyes	B. Nichols	Jan 2013
CHECKED-REVIEWED	E. Caswell	------	Jan 2013
DESIGN2-DETAILED2	------	------	------
DESIGN3-DETAILED3	------	------	------
REVISIONS 1	------	------	------
REVISIONS 2	------	------	------
REVISIONS 3	------	------	------
REVISIONS 4	------	------	------
FIELD CHANGES	------	------	------

SIGNATURE

P.E. NUMBER

DATE

MAINE KENNEBEC BRIDGE
KENNEBEC RIVER
RICHMOND, SAGADAHOC CTY. DRESDEN, LINCOLN CTY.

PIER NO. 4 REINFORCING

SHEET NUMBER

128

OF 238

Filename: ...\MSTA\128_Pier4_reinf.dgn Division: BRIDGE Username: dana.damren Date:3/27/2013

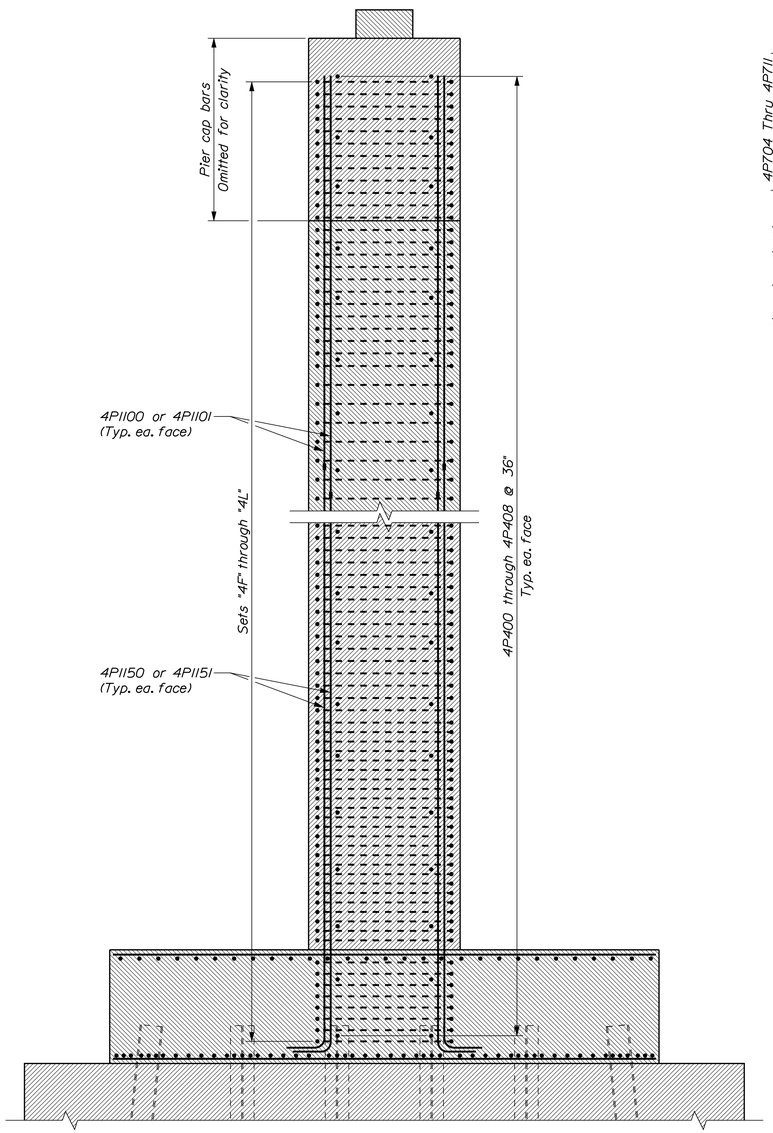

PIER NO. 4 SECTION

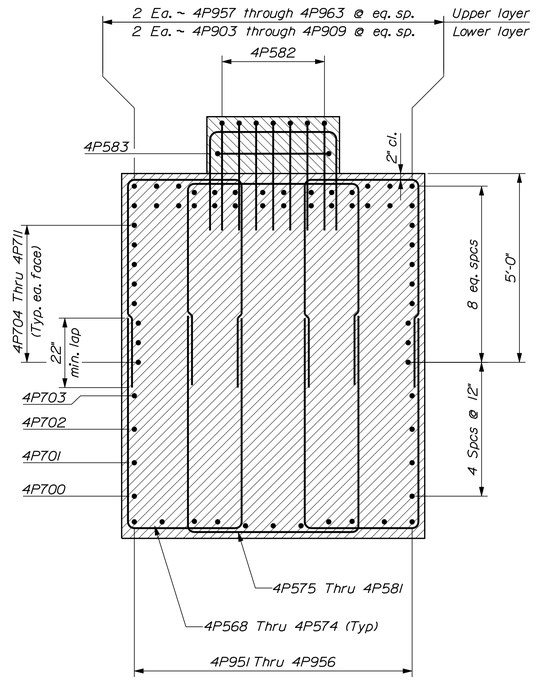

CAP CANTILEVER SECTION

Set "4M" Shown

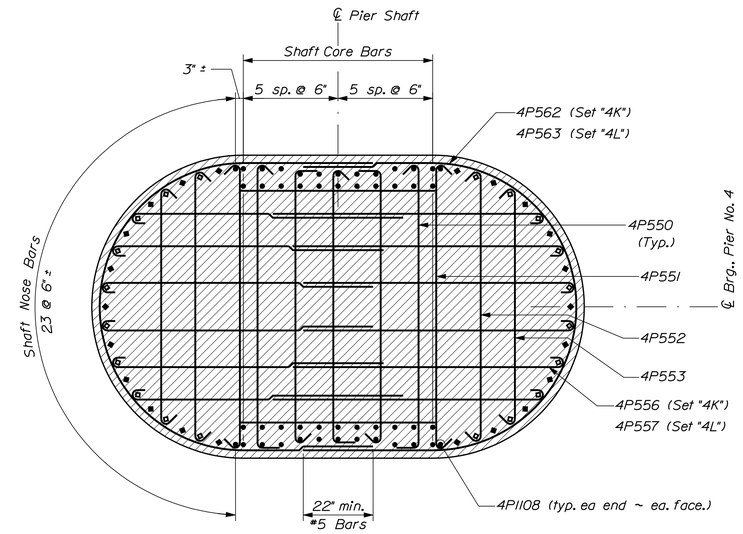

HORIZONTAL SECTION AT SHAFT TOP

90 vertical bars ~ Sets "4K" through "4L" shown
= 4P1100 = 4P1110
● = 4P1101 (unless noted) ◆ = 4P1109

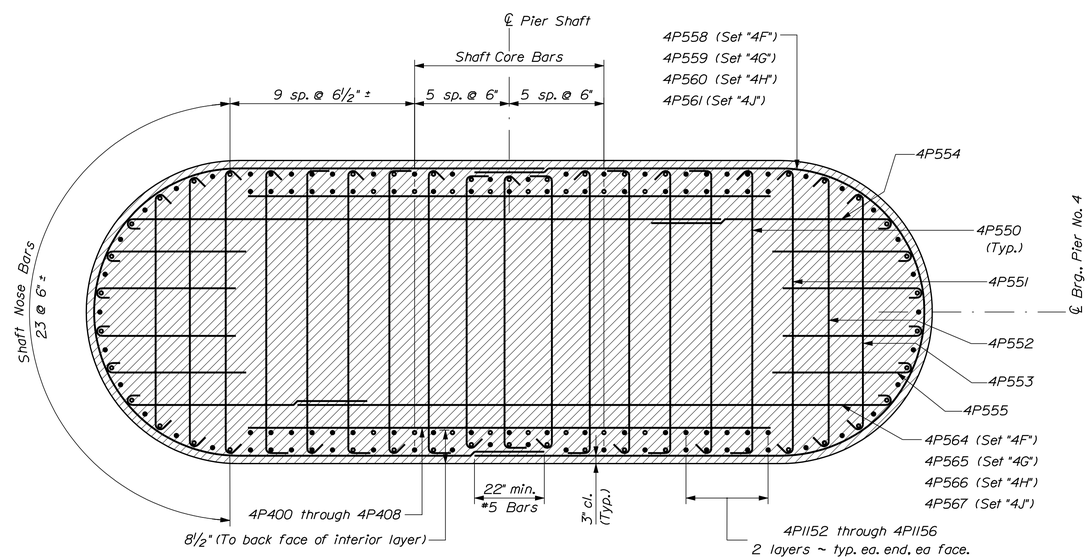

HORIZONTAL SECTION AT SHAFT BASE

154 vertical bars ~ Sets "4F" through "4J" shown
∘ = 4P1150
● = 4P1151 (unless noted)

STATE OF MAINE
DEPARTMENT OF TRANSPORTATION

AC-BH-1267(400)

WIN 12674.00

BRIDGE NO. 2506

BRIDGE PLANS

		BY	DATE
PROJ. MANAGER	N. Benoit		
DESIGN-DETAILED	R. Nadeau	B. Nichols	Jan 2013
CHECKED-REVIEWED	E. Caswell		Jan 2013
DESIGN2-DETAILED2			
DESIGN3-DETAILED3			
REVISIONS 1			
REVISIONS 2			
REVISIONS 3			
REVISIONS 4			
FIELD CHANGES			

SIGNATURE

P.E. NUMBER

DATE

MAINE KENNEBEC BRIDGE
KENNEBEC RIVER
RICHMOND, SAGADAHOC CTY. DRESDEN, LINCOLN CTY.

PIER NO. 4 SECTIONS

SHEET NUMBER

129

OF 238

Filename: ...\BRIDGE\MSTA\129_Pier4_sect.dgn Division: BRIDGE Username: dana.damren Date:3/27/2013

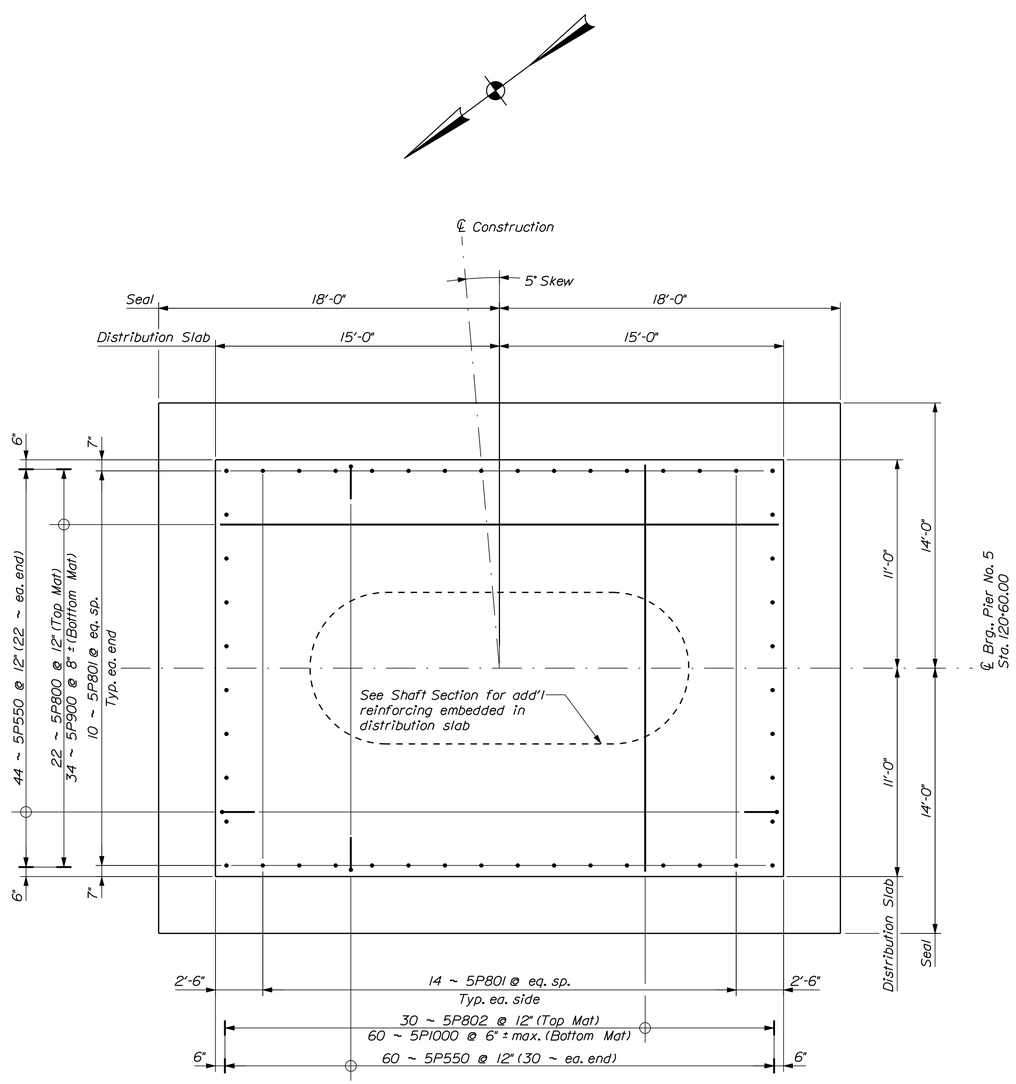

PIER NO. 5 SEAL & DISTRIBUTION SLAB PLAN

Flow

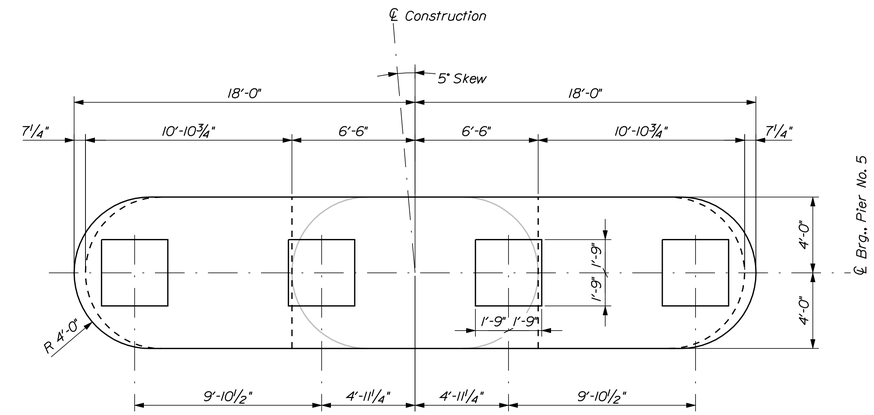

PIER NO. 5 CAP PLAN

Flow

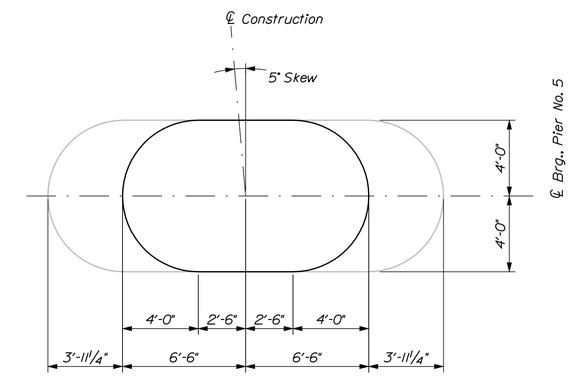

PIER NO. 5 SHAFT TOP PLAN

@ El. 52.50

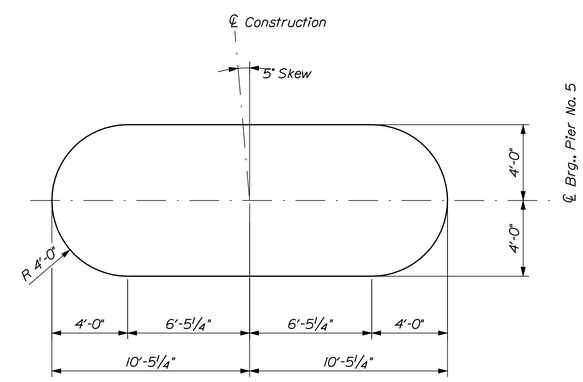

PIER NO. 5 SHAFT BASE PLAN

STATE OF MAINE
DEPARTMENT OF TRANSPORTATION

AC-BH-1267(400)

WIN 12674.00

BRIDGE NO. 2506

BRIDGE PLANS

		BY	DATE
PROJ. MANAGER	N. Benoit		
DESIGN-DETAILED	R. Noous	B. Nichols	Jan 2013
CHECKED-REVIEWED	E. Caswell	------	Jan 2013
DESIGN2-DETAILED2	------	------	------
DESIGN3-DETAILED3	------	------	------
REVISIONS 1	------	------	------
REVISIONS 2	------	------	------
REVISIONS 3	------	------	------
REVISIONS 4	------	------	------
FIELD CHANGES	------	------	------

SIGNATURE

P.E. NUMBER

DATE

MAINE KENNEBEC BRIDGE
KENNEBEC RIVER
RICHMOND, SAGADAHOC CTY. DRESDEN, LINCOLN CTY.

PIER NO. 5 PLAN

SHEET NUMBER

130

OF 238

Filename: ...\BRIDGE\MSTA\130_Pier5_plan.dgn Division: BRIDGE Username: dana.damren Date:3/27/2013

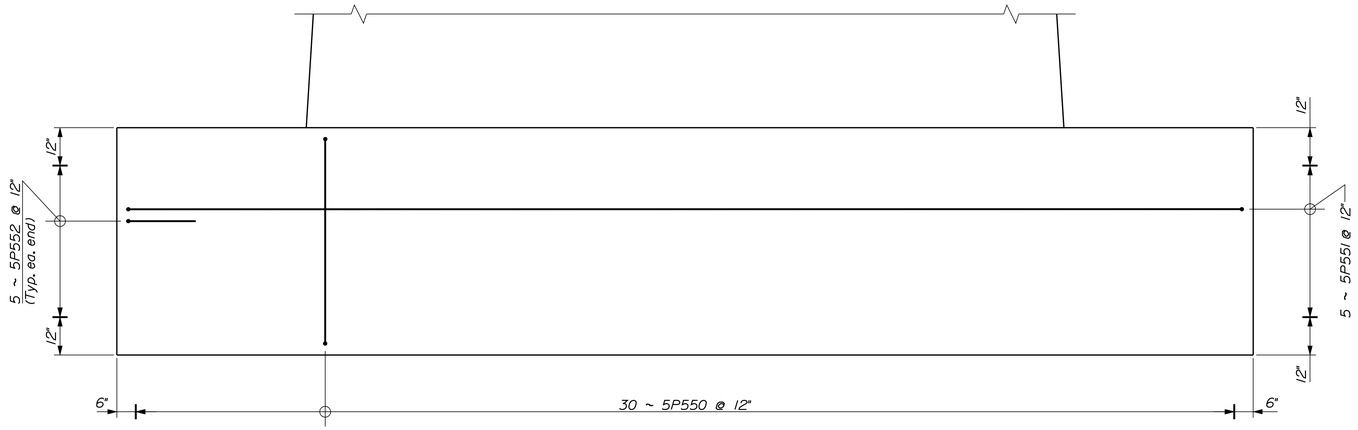

TYPICAL DISTRIBUTION SLAB ELEVATION

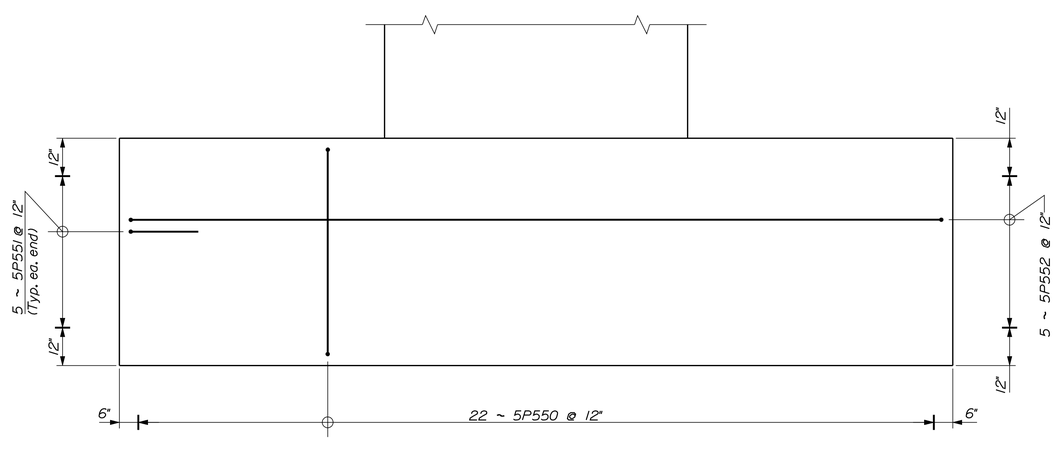

TYPICAL DISTRIBUTION SLAB END ELEVATION

STATE OF MAINE
DEPARTMENT OF TRANSPORTATION

AC-BH-1267(400)

WIN 12674.00

BRIDGE NO. 2506

BRIDGE PLANS

PROJ. MANAGER	N. Benoit	BY	DATE
DESIGN-DETAILED	R. Noous	B. Nichols	Jan 2013
CHECKED-REVIEWED	E. Caswell	------	Jan 2013
DESIGN2-DETAILED2	------	------	------
DESIGN3-DETAILED3	------	------	------
REVISIONS 1	------	------	------
REVISIONS 2	------	------	------
REVISIONS 3	------	------	------
REVISIONS 4	------	------	------
FIELD CHANGES	------	------	------

SIGNATURE

P.E. NUMBER

DATE

MAINE KENNEBEC BRIDGE
KENNEBEC RIVER
RICHMOND, SAGADAHOC CTY. DRESDEN, LINCOLN CTY.

PIER NO. 5 DISTRIBUTION
SLAB ELEVATIONS

SHEET NUMBER

131

OF 238

Filename: ...\MSTA\131_Pier5_slobelev.dgn Division: BRIDGE Username: dana.damren Date:3/27/2013

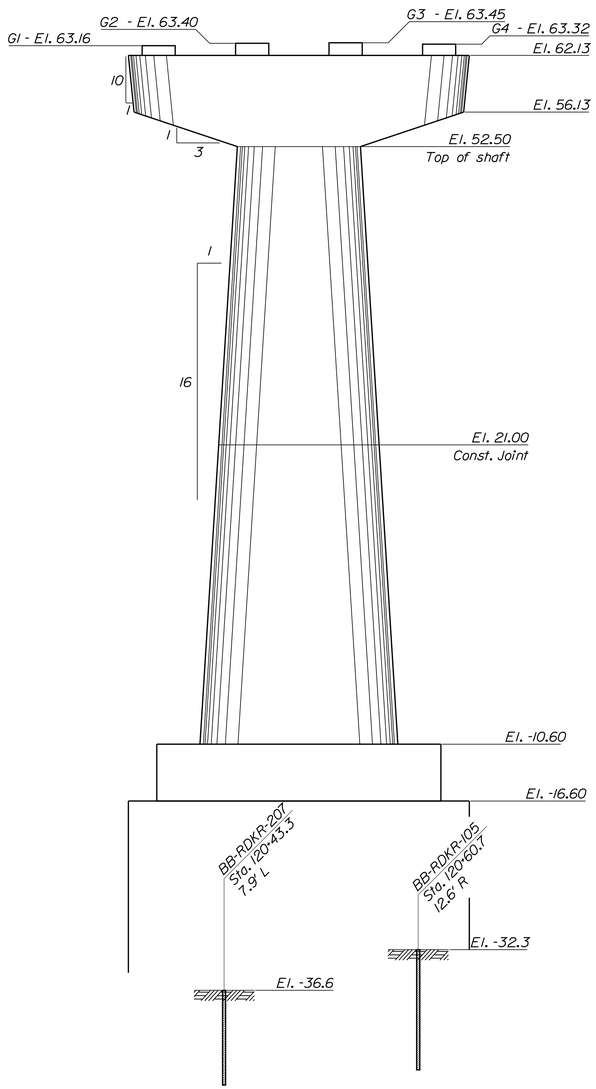

PIER NO. 5 ELEVATION

Flow

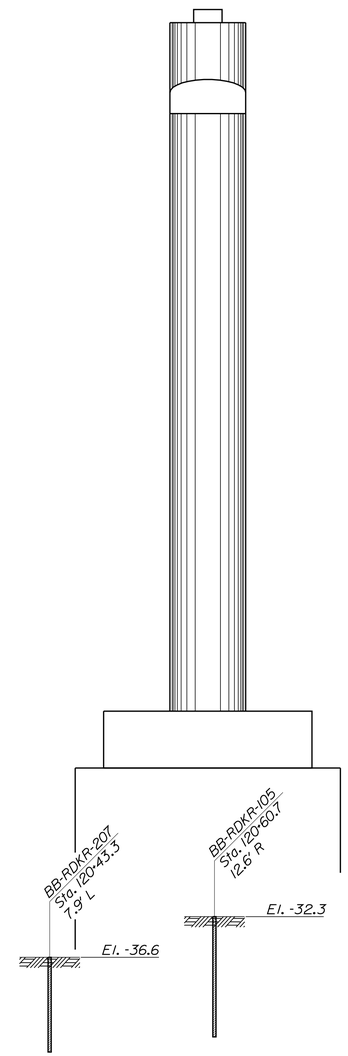

PIER NO. 5 END ELEVATION

STATE OF MAINE
DEPARTMENT OF TRANSPORTATION

AC-BH-1267(400)

WIN 12674.00

BRIDGE NO. 2506

BRIDGE PLANS

PROJ. MANAGER	N. Benoit	BY	DATE
DESIGN-DETAILED	R. Noous	B. Nichols	Jan 2013
CHECKED-REVIEWED	E. Caswell	------	Jan 2013
DESIGN2-DETAILED2	------	------	------
DESIGN3-DETAILED3	------	------	------
REVISIONS 1	------	------	------
REVISIONS 2	------	------	------
REVISIONS 3	------	------	------
REVISIONS 4	------	------	------
FIELD CHANGES	------	------	------

SIGNATURE

P.E. NUMBER

DATE

MAINE KENNEBEC BRIDGE
KENNEBEC RIVER
RICHMOND, SAGADAHOC CTY. DRESDEN, LINCOLN CTY.

PIER NO. 5 ELEVATIONS

SHEET NUMBER

132

OF 238

Filename: ...\BRIDGE\MSTA\132_Pier5_elev.dgn Division: BRIDGE Username: dana.damren Date:3/27/2013

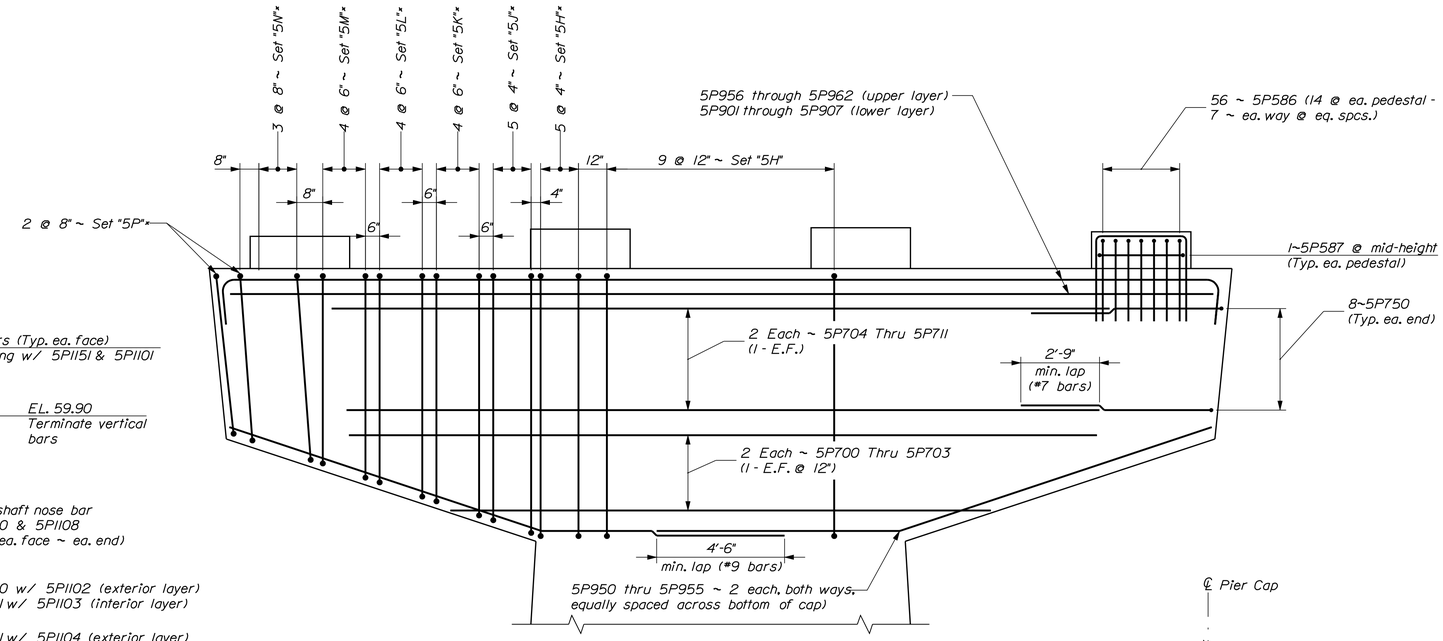

PIER NO. 5 CAP REINFORCING

Sets with "*" are typical both ends of cap

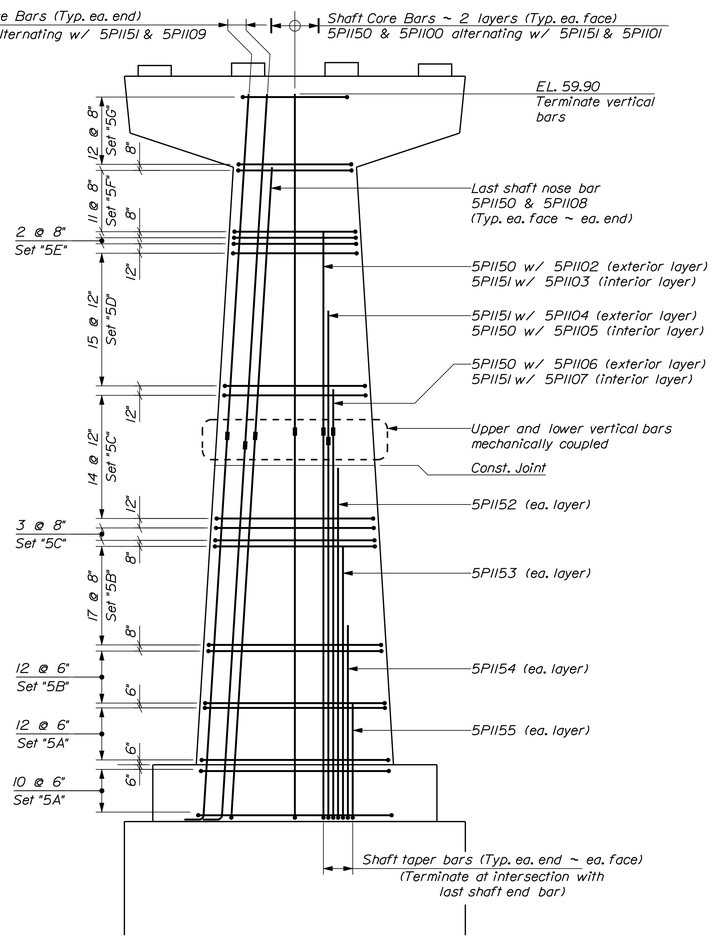

PIER NO. 5 ELEVATION

PIER NO. 5 REINFORCING STEEL SET SCHEDULE

Set	Qty	Location	Bar Designations
5A	22	Pier Shaft	13 ~ 5P553, 2 ~ 5P554, 2 ~ 5P555, 2 ~ 5P556, 2 ~ 5P557, 8 ~ 5P558, 2 ~ 5P562, 2 ~ 5P568
5B	29	Pier Shaft	11 ~ 5P553, 2 ~ 5P554, 2 ~ 5P555, 2 ~ 5P556, 2 ~ 5P557, 8 ~ 5P558, 2 ~ 5P563, 2 ~ 5P569
5C	17	Pier Shaft	9 ~ 5P553, 2 ~ 5P554, 2 ~ 5P555, 2 ~ 5P556, 2 ~ 5P557, 8 ~ 5P558, 2 ~ 5P564, 2 ~ 5P570
5D	15	Pier Shaft	7 ~ 5P553, 2 ~ 5P554, 2 ~ 5P555, 2 ~ 5P556, 2 ~ 5P557, 8 ~ 5P558, 2 ~ 5P565, 2 ~ 5P571
5E	2	Pier Shaft	7 ~ 5P553, 2 ~ 5P554, 2 ~ 5P555, 2 ~ 5P556, 12 ~ 5P559, 2 ~ 5P565
5F	11	Pier Shaft	5 ~ 5P553, 2 ~ 5P554, 2 ~ 5P555, 2 ~ 5P556, 12 ~ 5P560, 2 ~ 5P566
5G	12	Pier Shaft	5 ~ 5P553, 2 ~ 5P555, 2 ~ 5P556, 12 ~ 5P561, 2 ~ 5P567
5H	19	Pier Cap Stirrup	4 ~ 5P572, 2 ~ 5P579
5J	10	Pier Cap Stirrup	4 ~ 5P573, 2 ~ 5P580
5K	8	Pier Cap Stirrup	4 ~ 5P574, 2 ~ 5P581
5L	8	Pier Cap Stirrup	4 ~ 5P575, 2 ~ 5P582
5M	8	Pier Cap Stirrup	4 ~ 5P576, 2 ~ 5P583
5N	6	Pier Cap Stirrup	4 ~ 5P577, 2 ~ 5P584
5P	4	Pier Cap Stirrup	4 ~ 5P578, 2 ~ 5P585

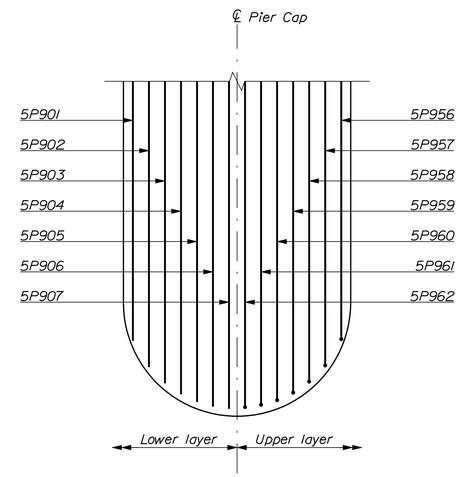

TOP OF PIER CAP REINFORCING

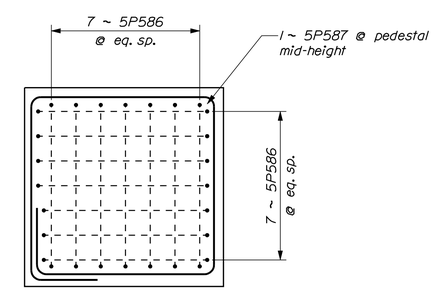

BEARING PEDESTAL REINFORCING

STATE OF MAINE
DEPARTMENT OF TRANSPORTATION

AC-BH-1267(400)

WIN 12674.00

BRIDGE NO. 2506

BRIDGE PLANS

		BY	DATE
PROJ. MANAGER	N. Benoit		
DESIGN-DETAILED	R. Noous	B. Nichols	Jan 2013
CHECKED-REVIEWED	E. Caswell	-----	Jan 2013
DESIGN2-DETAILED2	-----	-----	-----
DESIGN3-DETAILED3	-----	-----	-----
REVISIONS 1	-----	-----	-----
REVISIONS 2	-----	-----	-----
REVISIONS 3	-----	-----	-----
REVISIONS 4	-----	-----	-----
FIELD CHANGES	-----	-----	-----

SIGNATURE

P.E. NUMBER

DATE

MAINE KENNEBEC BRIDGE
KENNEBEC RIVER
RICHMOND, SAGADAHOC CTY. DRESDEN, LINCOLN CTY.

PIER NO. 5 REINFORCING

SHEET NUMBER

133

OF 238

Filename: ...\MSTA\133_Pier5_reinf.dgn Division: BRIDGE Username: dana.damren Date:3/27/2013

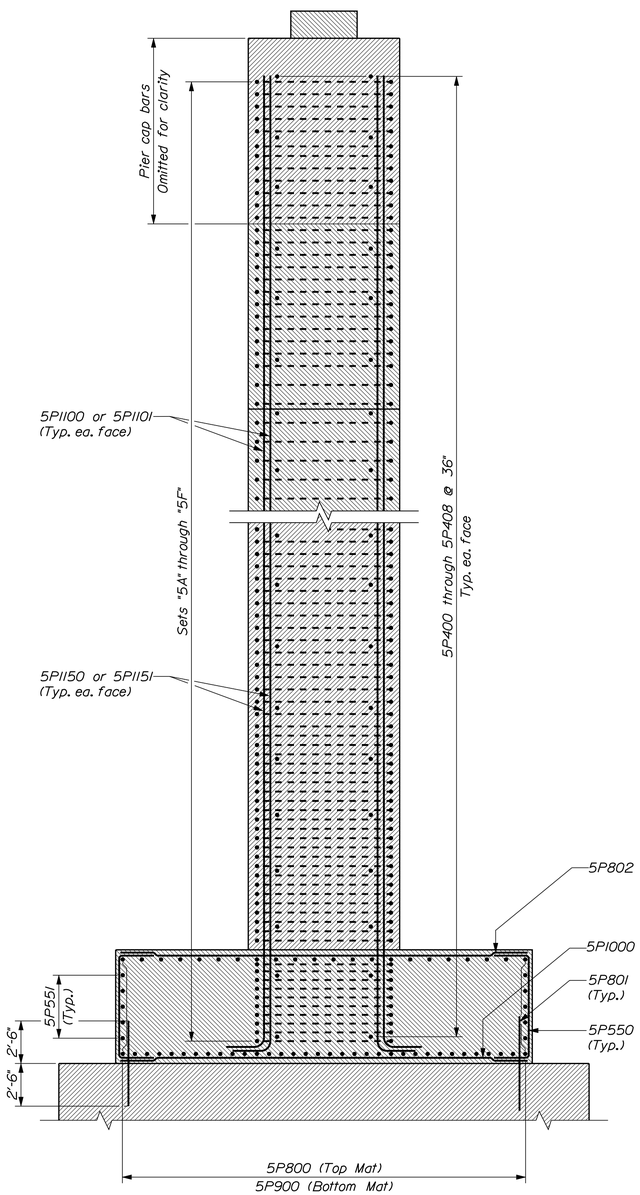

PIER NO. 5 SECTION

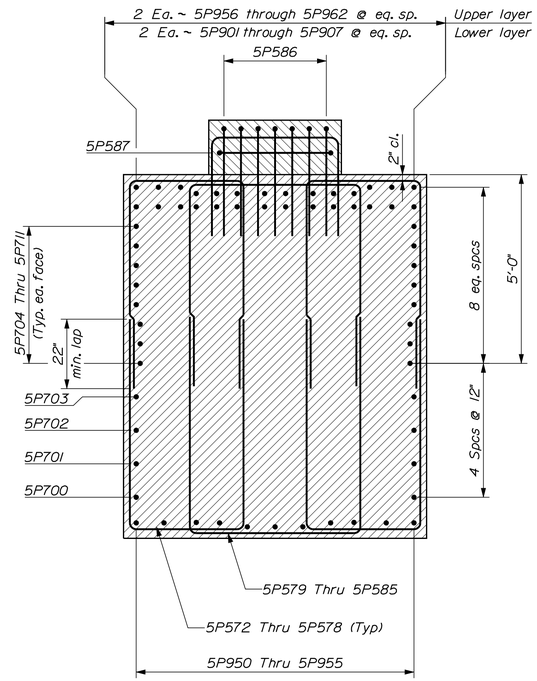

CAP CANTILEVER SECTION

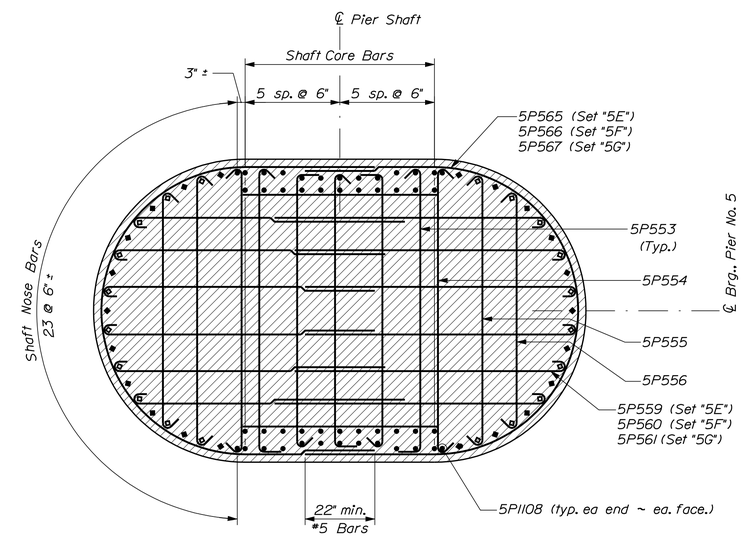

HORIZONTAL SECTION AT SHAFT TOP

90 vertical bars ~ Sets "5E" through "5G" shown

○ = 5P1100 ◇ = 5P1110

● = 5P1101 (unless noted) ◆ = 5P1109

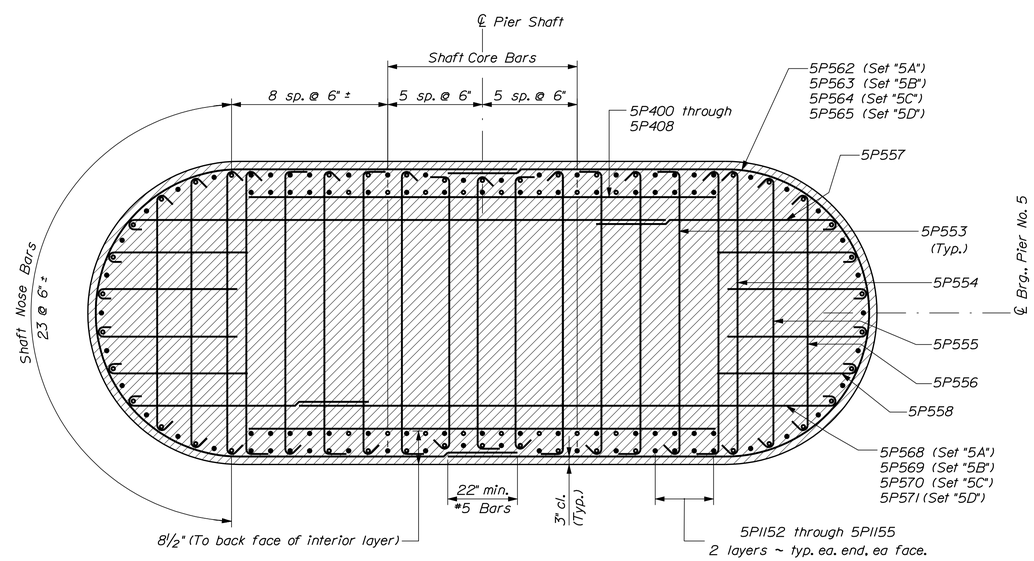

HORIZONTAL SECTION AT SHAFT BASE

146 vertical bars ~ Sets "5A" through "5D" shown

○ = 5P1150

● = 5P1151 (unless noted)

STATE OF MAINE
DEPARTMENT OF TRANSPORTATION

AC-BH-1267(400)

WIN 12674.00

BRIDGE NO. 2506

BRIDGE PLANS

		BY	DATE
PROJ. MANAGER	N. Benoit		
DESIGN-DETAILED	R. Noons	B. Nichols	Jan 2013
CHECKED-REVIEWED	E. Caswell		Jan 2013
DESIGN2-DETAILED2			
DESIGN3-DETAILED3			
REVISIONS 1			
REVISIONS 2			
REVISIONS 3			
REVISIONS 4			
FIELD CHANGES			

SIGNATURE

P.E. NUMBER

DATE

MAINE KENNEBEC BRIDGE
KENNEBEC RIVER
RICHMOND, SAGADAHOC CTY. DRESDEN, LINCOLN CTY.

PIER NO. 5 SECTIONS

SHEET NUMBER

134

OF 238

Filename: ...\BRIDGE\MSTA\134_Pier5_sect.dgn Division: BRIDGE Username: dana.damren Date:3/27/2013

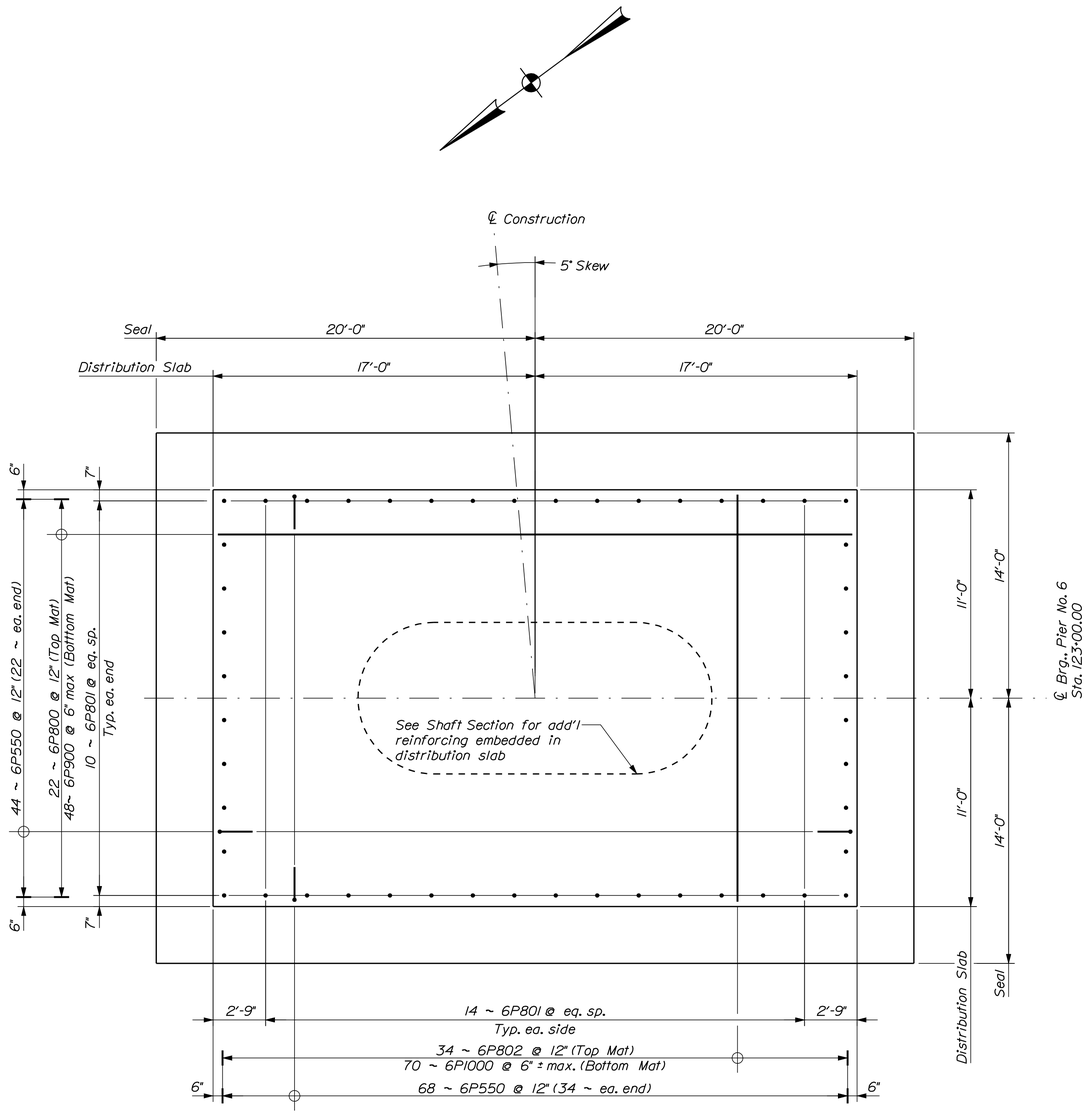

PIER NO. 6 SEAL & DISTRIBUTION SLAB PLAN
Flow

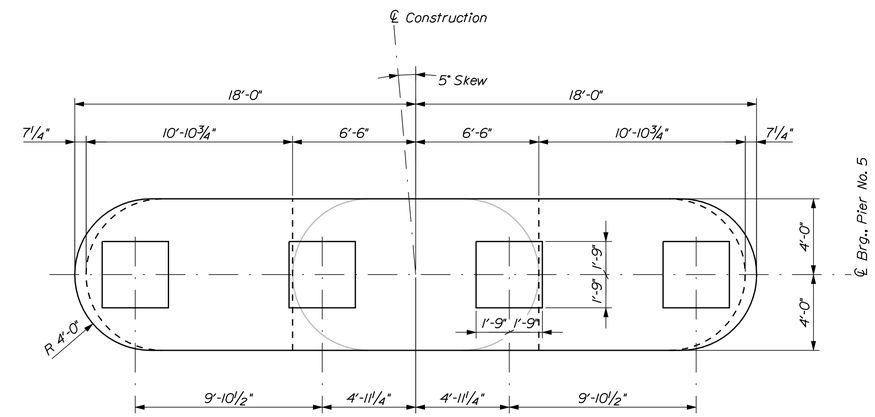

PIER NO. 6 CAP PLAN
Flow

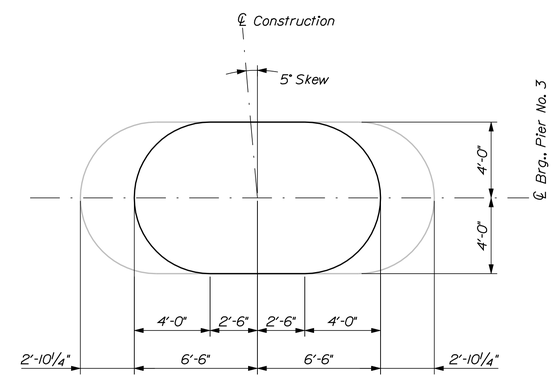

PIER NO. 6 SHAFT TOP PLAN
@ El. 37.90

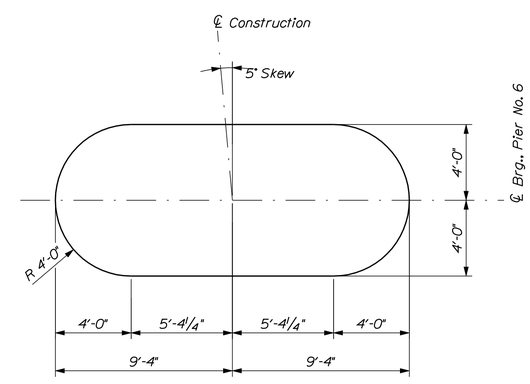

PIER NO. 6 SHAFT BASE PLAN

STATE OF MAINE
DEPARTMENT OF TRANSPORTATION

AC-BH-1267(400)

WIN 12674.00

BRIDGE NO. 2506

BRIDGE PLANS

PROJ. MANAGER	N. Benoit	BY	DATE
DESIGN-DETAILED	R. Noous	B. Nichols	Jan 2013
CHECKED-REVIEWED	E. Caswell	------	Jan 2013
DESIGN2-DETAILED2	------	------	------
DESIGN3-DETAILED3	------	------	------
REVISIONS 1	------	------	------
REVISIONS 2	------	------	------
REVISIONS 3	------	------	------
REVISIONS 4	------	------	------
FIELD CHANGES	------	------	------

SIGNATURE

P.E. NUMBER

DATE

MAINE KENNEBEC BRIDGE
KENNEBEC RIVER
RICHMOND, SAGADAHOC CTY. DRESDEN, LINCOLN CTY.

PIER NO. 6 PLAN

SHEET NUMBER
135
OF 238

Filename: ...\BRIDGE\MSTA\135_Pier6_plan.dgn Division: BRIDGE Username: dana.damren Date:3/27/2013

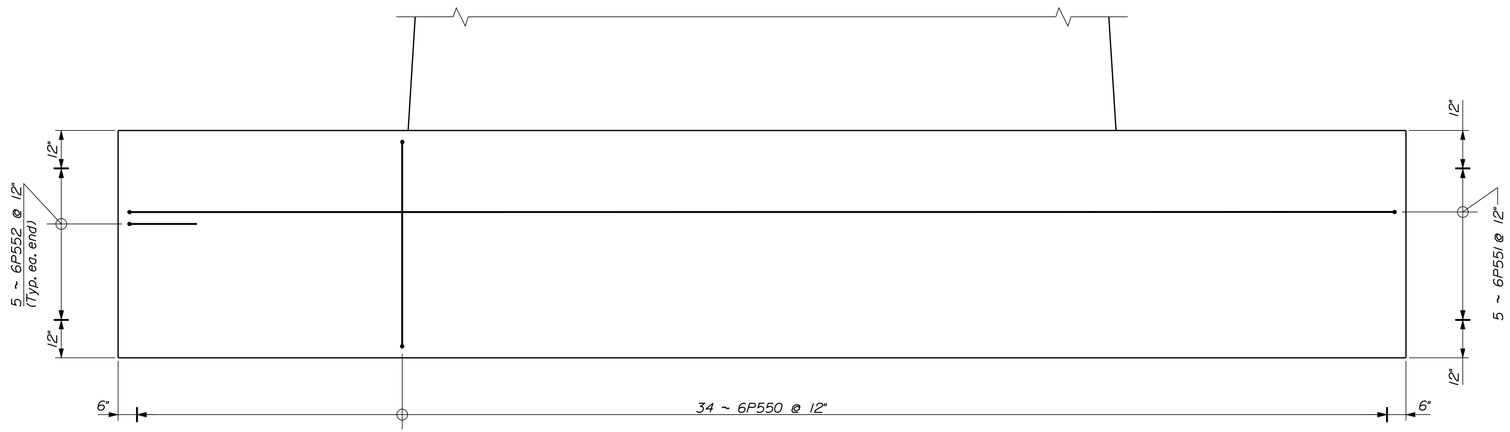

TYPICAL DISTRIBUTION SLAB ELEVATION

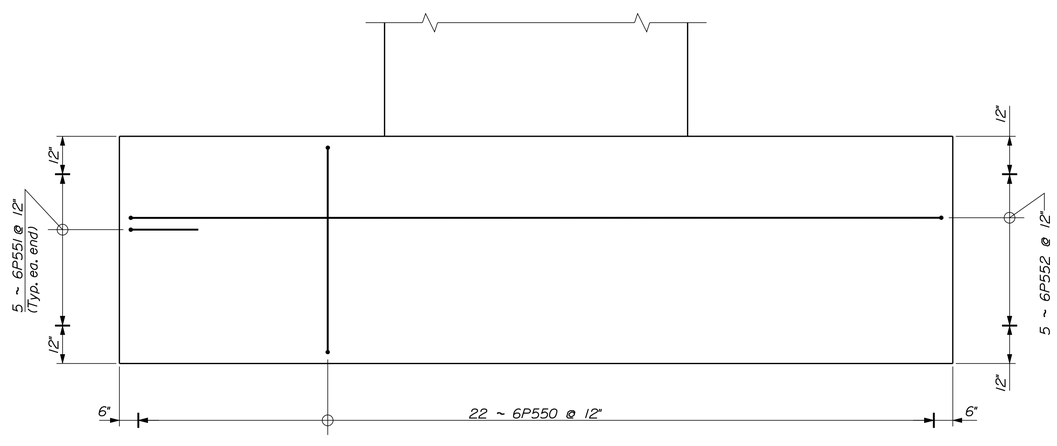

TYPICAL DISTRIBUTION SLAB END ELEVATION

PROJ. MANAGER	N. Benoit	BY	DATE
DESIGN-DETAILED	R. Noous	B. Nichols	Jan 2013
CHECKED-REVIEWED	E. Caswell	------	Jan 2013
DESIGN2-DETAILED2	------	------	------
DESIGN3-DETAILED3	------	------	------
REVISIONS 1	------	------	------
REVISIONS 2	------	------	------
REVISIONS 3	------	------	------
REVISIONS 4	------	------	------
FIELD CHANGES	------	------	------

SIGNATURE

P.E. NUMBER

DATE

STATE OF MAINE
DEPARTMENT OF TRANSPORTATION

AC-BH-1267(400)

WIN 12674.00

BRIDGE NO. 2506

BRIDGE PLANS

MAINE KENNEBEC BRIDGE
KENNEBEC RIVER
RICHMOND, SAGADAHOC CTY. DRESDEN, LINCOLN CTY.

PIER NO. 6 DISTRIBUTION SLAB ELEVATIONS

SHEET NUMBER

136

OF 238

Filename: ...\MSTA\136_Pier6_slabelev.dgn Division: BRIDGE Username: dana.damren Date:3/27/2013

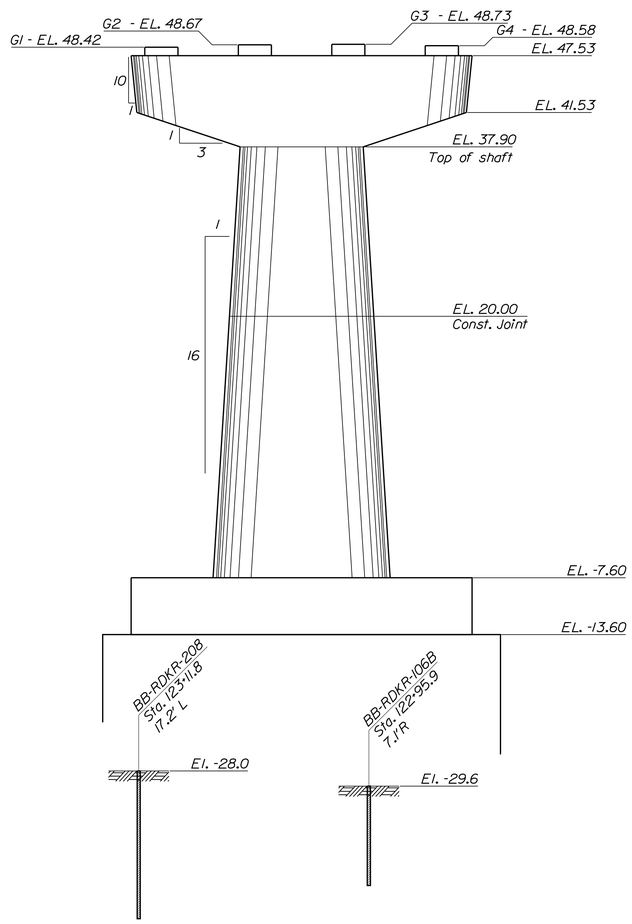

PIER NO. 6 ELEVATION

Flow

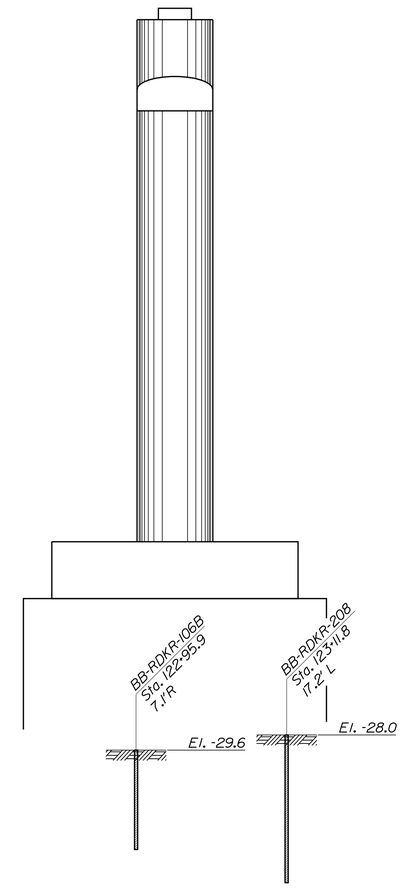

PIER NO. 6 END ELEVATION

Filename: ...\BRIDGE\MSTA\137_Pier6_elev.dgn Division: BRIDGE Username: dana.damren Date:3/27/2013

STATE OF MAINE
DEPARTMENT OF TRANSPORTATION

AC-BH-1267(400)

WIN 12674.00

BRIDGE NO. 2506

BRIDGE PLANS

PROJ. MANAGER	N. Benoit			
DESIGN-DETAILED	R. Noous	B. Nichols	Jan 2013	
CHECKED-REVIEWED	E. Caswell	------	Jan 2013	SIGNATURE
DESIGN2-DETAILED2	------	------	------	
DESIGN3-DETAILED3	------	------	------	P.E. NUMBER
REVISIONS 1	------	------	------	
REVISIONS 2	------	------	------	
REVISIONS 3	------	------	------	DATE
REVISIONS 4	------	------	------	
FIELD CHANGES	------	------	------	

MAINE KENNEBEC BRIDGE
KENNEBEC RIVER
RICHMOND, SAGADAHOC CTY. DRESDEN, LINCOLN CTY.

PIER NO. 6 ELEVATIONS

SHEET NUMBER

137

OF 238

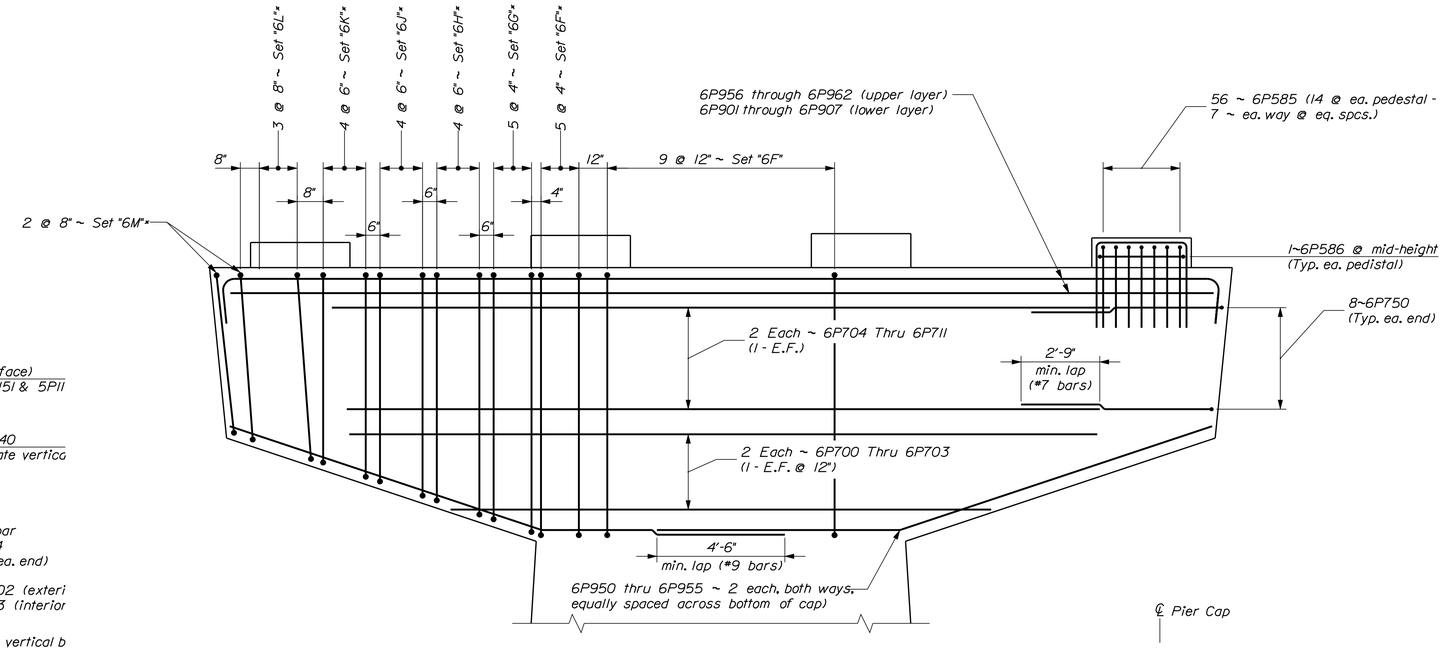

PIER NO. 6 CAP REINFORCING

Sets with "*" are typical both ends of cap

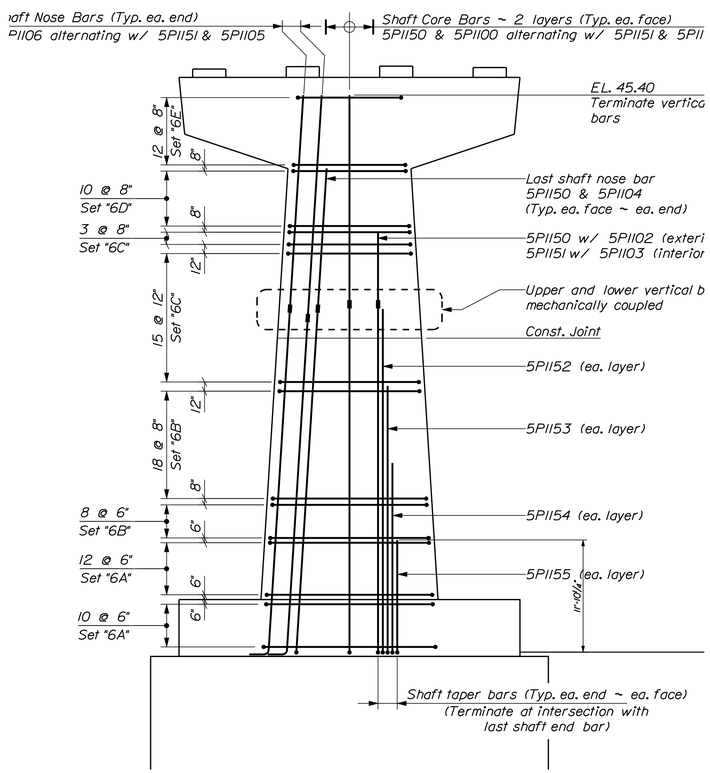

PIER NO. 6 ELEVATION

PIER NO. 6 REINFORCING STEEL SET SCHEDULE			
Set	Qty	Location	Bar Designations
6A	22	Pier Shaft	11 ~ 6P553, 2 ~ 6P554, 2 ~ 6P555, 2 ~ 6P556, 2 ~ 6P557, 8 ~ 6P558, 2 ~ 6P562, 2 ~ 6P567
6B	26	Pier Shaft	9 ~ 6P553, 2 ~ 6P554, 2 ~ 6P555, 2 ~ 6P556, 2 ~ 6P557, 8 ~ 6P558, 2 ~ 6P563, 2 ~ 6P568
6C	15	Pier Shaft	7 ~ 6P553, 2 ~ 6P554, 2 ~ 6P555, 2 ~ 6P556, 2 ~ 6P557, 8 ~ 6P558, 2 ~ 6P564, 2 ~ 6P569
6D	3	Pier Shaft	7 ~ 6P553, 2 ~ 6P554, 2 ~ 6P555, 2 ~ 6P556, 12 ~ 6P559, 2 ~ 6P564
6E	10	Pier Shaft	5 ~ 6P553, 2 ~ 6P554, 2 ~ 6P555, 2 ~ 6P556, 12 ~ 6P560, 2 ~ 6P565,
6F	12	Pier Shaft	5 ~ 6P553, 2 ~ 6P555, 2 ~ 6P556, 12 ~ 6P561, 2 ~ 6P566
6G	19	Pier Cap Stirrup	4 ~ 6P571, 2 ~ 6P578
6H	10	Pier Cap Stirrup	4 ~ 6P572, 2 ~ 6P579
6J	8	Pier Cap Stirrup	4 ~ 6P573, 2 ~ 6P580
6K	8	Pier Cap Stirrup	4 ~ 6P574, 2 ~ 6P581
6L	8	Pier Cap Stirrup	4 ~ 6P575, 2 ~ 6P582
6M	6	Pier Cap Stirrup	4 ~ 6P576, 2 ~ 6P583
6N	4	Pier Cap Stirrup	4 ~ 6P577, 2 ~ 6P584

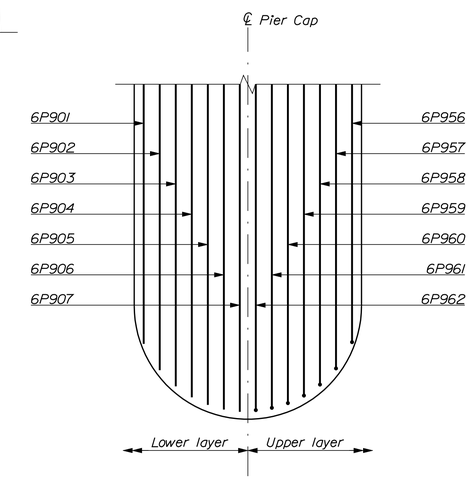

TOP OF PIER CAP REINFORCING

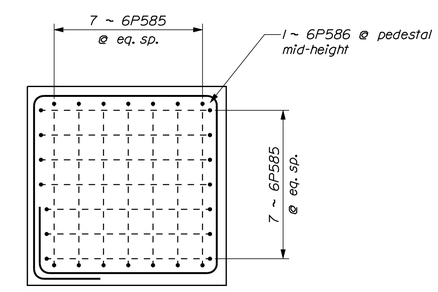

BEARING PEDESTAL REINFORCING

STATE OF MAINE
DEPARTMENT OF TRANSPORTATION

AC-BH-1267(400)

WIN 12674.00

BRIDGE NO. 2506

BRIDGE PLANS

PROJ. MANAGER	N. Benoit	BY	DATE
DESIGN-DETAILED	R. Noous	B. Nichols	Jan 2013
CHECKED-REVIEWED	E. Coswell	------	Jan 2013
DESIGN2-DETAILED2	------	------	------
DESIGN3-DETAILED3	------	------	------
REVISIONS 1	------	------	------
REVISIONS 2	------	------	------
REVISIONS 3	------	------	------
REVISIONS 4	------	------	------
FIELD CHANGES	------	------	------

SIGNATURE

P.E. NUMBER

DATE

MAINE KENNEBEC BRIDGE
KENNEBEC RIVER
RICHMOND, SAGADAHOC CTY. DRESDEN, LINCOLN CTY.

PIER NO. 6 REINFORCING

SHEET NUMBER

138

OF 238

Filename: ...\MSTA\138_Pier6_reinf.dgn Division: BRIDGE Username: dana.damren Date:3/27/2013

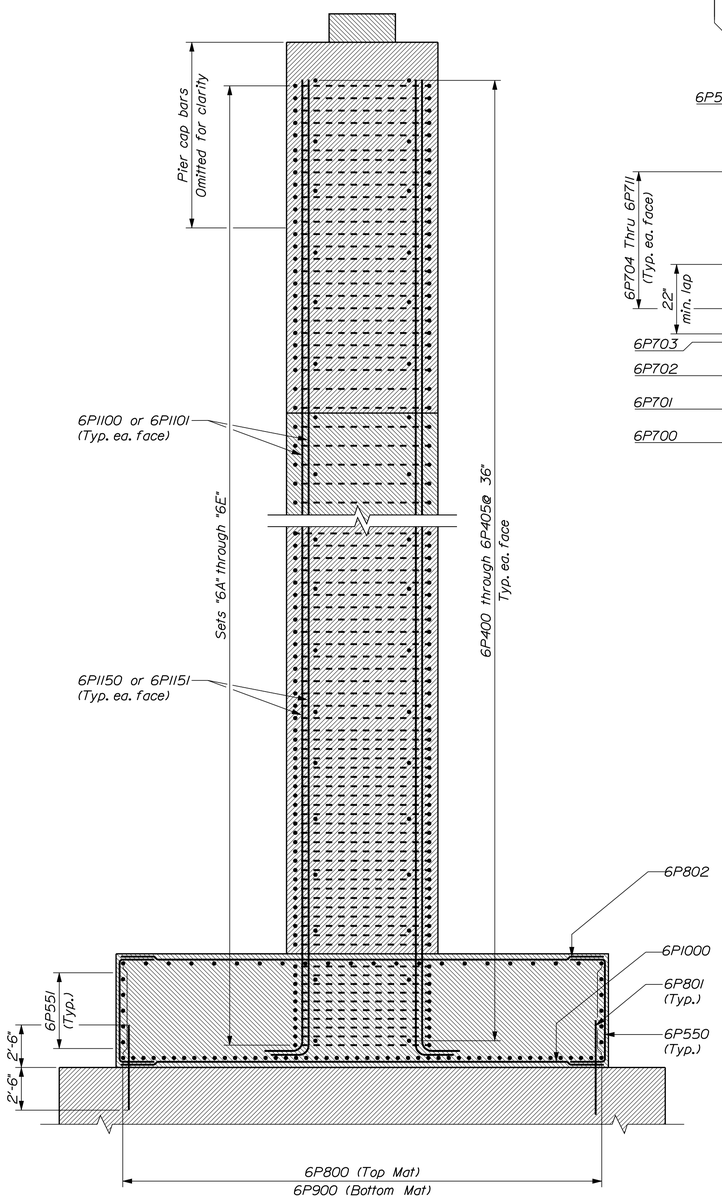

PIER NO. 6 SECTION

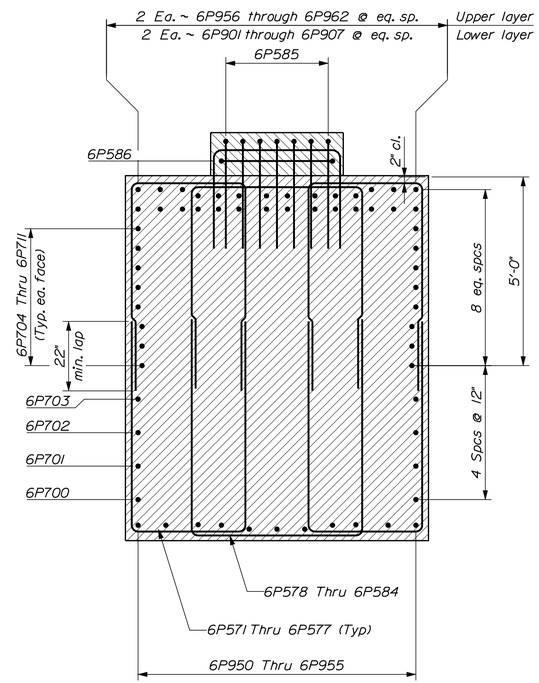

CAP CANTILEVER SECTION

Set "6G" Shown

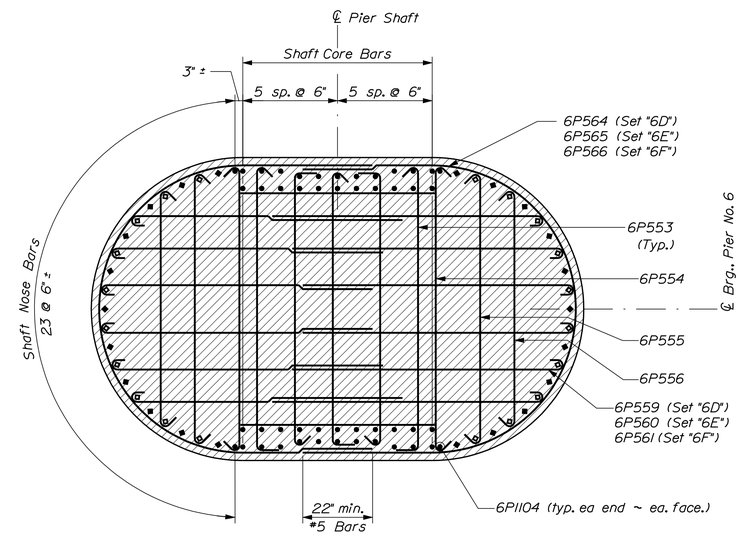

HORIZONTAL SECTION AT SHAFT TOP

90 vertical bars ~ Set "6D" through "6GF" shown

○ = 6P11100 ◇ = 6P11106

● = 6P11101 (unless noted) ◆ = 6P11105

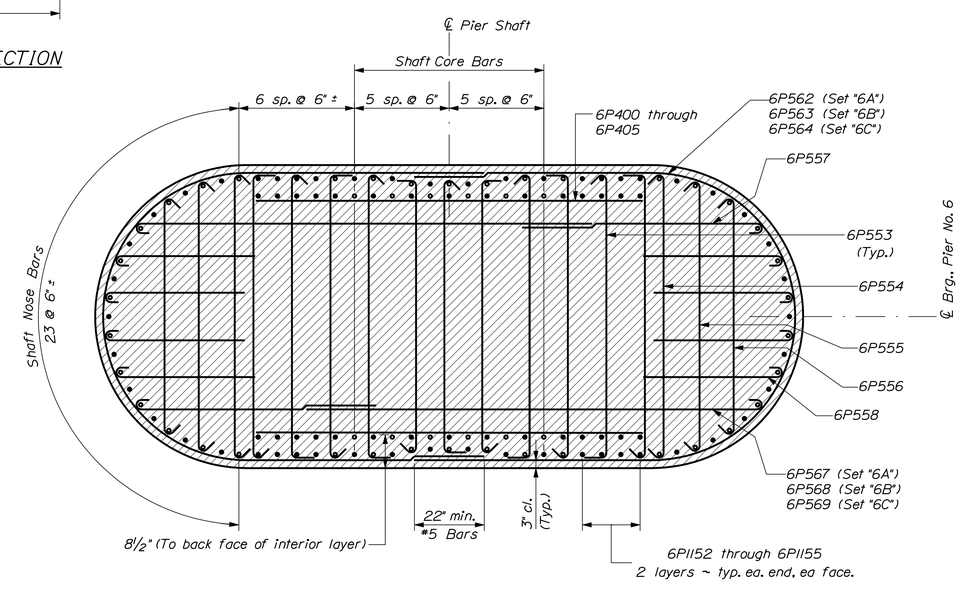

HORIZONTAL SECTION AT SHAFT BASE

130 vertical bars ~ Sets "6A" through "6C" shown

○ = 6P11150

● = 6P11151 (unless noted)

STATE OF MAINE
DEPARTMENT OF TRANSPORTATION

AC-BH-1267(400)

WIN 12674.00

BRIDGE NO. 2506

BRIDGE PLANS

PROJ. MANAGER	N. Benoit	BY	DATE
DESIGN-DETAILED	R. Noous	B. Nichols	Jan 2013
CHECKED-REVIEWED	E. Caswell	------	Jan 2013
DESIGN2-DETAILED2	------	------	------
DESIGN3-DETAILED3	------	------	------
REVISIONS 1	------	------	------
REVISIONS 2	------	------	------
REVISIONS 3	------	------	------
REVISIONS 4	------	------	------
FIELD CHANGES	------	------	------

SIGNATURE

P.E. NUMBER

DATE

MAINE KENNEBEC BRIDGE
KENNEBEC RIVER
RICHMOND, SAGADAHOC CTY. DRESDEN, LINCOLN CTY.

PIER NO. 6 SECTIONS

SHEET NUMBER

139

OF 238

Filename: ...\BRIDGE\MSTA\139_Pier6_sect.dgn Division: BRIDGE Username: dana.damren Date:3/27/2013

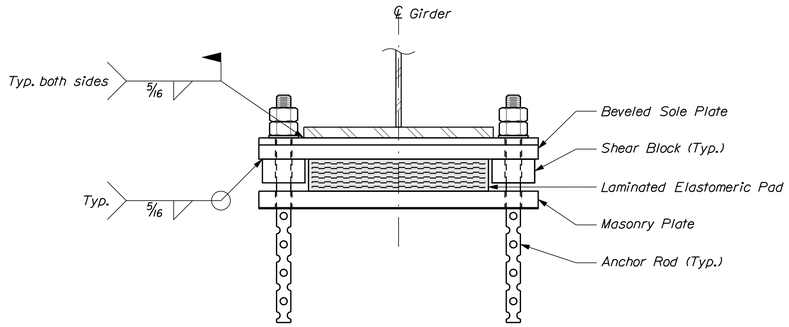

FIXED BEARING ELEVATION

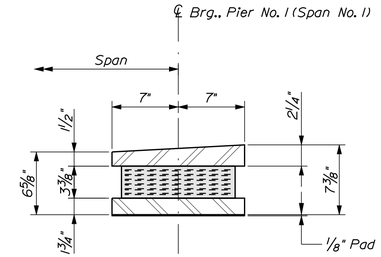

FIXED BEARING SECTION

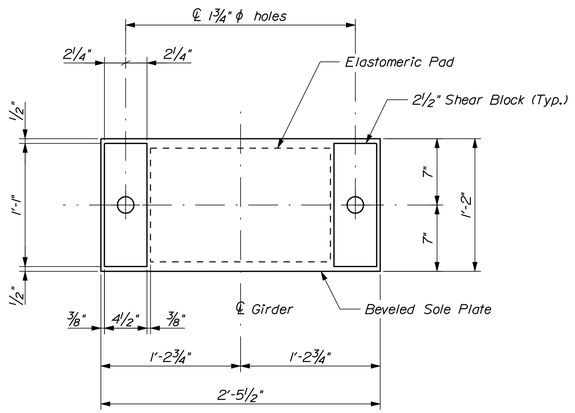

FIXED SOLE PLATE PLAN
Looking up at bottom of Beveled Sole Plate

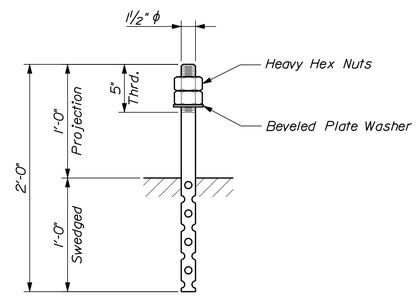

FIXED ANCHOR ROD DETAIL

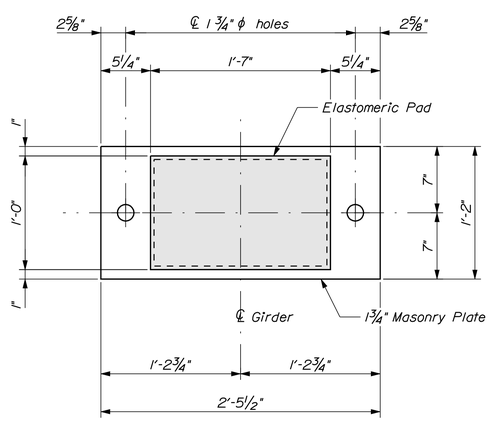

FIXED MASONRY PLATE PLAN
Showing laminated elastomeric pad

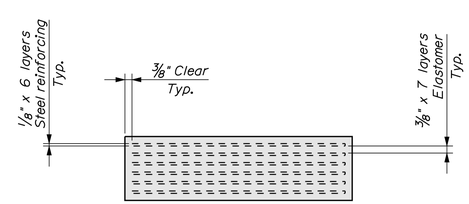

ELASTOMERIC PAD SECTION

ELASTOMERIC BEARING NOTES

1. The design temperature range shall be 125 °F (-20 °F to 105 °F).

2. The elastomer shall be 100% neoprene.

3. The shear modulus of the elastomer shall be 150 lb/in² +/- 15%.

4. Masonry plates shall meet the requirements of ASTM A 709/A 709M, Grade 50.

5. Sole plates, shear blocks and plate washers shall meet the requirements of ASTM A 709/A 709M, Grade 50W.

6. Anchor rods shall meet the requirements of ASTM F 1554, Grade 105 and shall be swedged on the embedded portion of the rod.

7. Heavy hex nuts for anchor rods shall meet the requirements of ASTM A 563M, Class 5.

8. Masonry and sole plates shall be galvanized in accordance with Section 506. Anchor rods, washers, nuts and shear pins shall be galvanized to ASTM A 153 or ASTM B 695, Class 50, Type 1. Payment for galvanizing will be considered incidental to the elastomeric bearing pay items.

9. Vulcanizing of the elastomer to the steel plates shall be done during the primary mold process.

10. All bearings shall be marked prior to shipping. The marks shall include the bearing location on the bridge and a direction arrow that points upstation. All marks shall be permanent and shall be visible after the bearing is installed.

11. Bearings shall be covered during transit.

12. The bearings are designed so that the superstructure may be erected when the ambient air temperature is within the range of 30 °F and 60 °F. If the ambient air temperature is outside this range, the bearings shall be reset as directed by the Resident.

13. Bearings shall be reset after the full dead load placement (slab, curb, rail and wearing surface). The bridge shall be jacked to allow each bearing to return to its neutral position.

14. All necessary precautions shall be taken to protect bearing components from field weld flash and spatter. Heat from welding operations shall be controlled such that steel adjacent to the elastomer does not exceed 200 °F. The temperature shall be verified by the use of temperature indicating crayons or other suitable means.

15. After the sole plate has been welded to the structural steel, the shear blocks, the top 5 inches of the anchor rods, the plate washers and the exposed surface of the sole plates, including the anchor bolt holes, shall be treated with a dielectric material as approved by the Resident.

16. Upset the threads on the anchor rods after assembly of the bearing.

STATE OF MAINE
DEPARTMENT OF TRANSPORTATION

AC-BH-1267(400)

WIN 12674.00

BRIDGE NO. 2506

BRIDGE PLANS

PROJ. MANAGER	N. Benoit		
DESIGN-DETAILED	B. Reeves	BY	DATE
CHECKED-REVIEWED	E. Caswell	D. Damren	Sept. 2012
DESIGN2-DETAILED2	------	------	Sept. 2012
DESIGN3-DETAILED3	------	------	------
REVISIONS 1	------	------	------
REVISIONS 2	------	------	------
REVISIONS 3	------	------	------
REVISIONS 4	------	------	------
FIELD CHANGES	------	------	------

SIGNATURE

P.E. NUMBER

DATE

MAINE KENNEBEC BRIDGE
KENNEBEC RIVER
RICHMOND, SAGADAHOC CTY. DRESDEN, LINCOLN CTY.

FIXED BEARINGS ~ SPAN NO. 1

SHEET NUMBER
140
OF 9

Filename: ...\140_Bearings_Span No. 1 Fixed.dgn Division: BRIDGE Username: dana.damren Date:3/27/2013

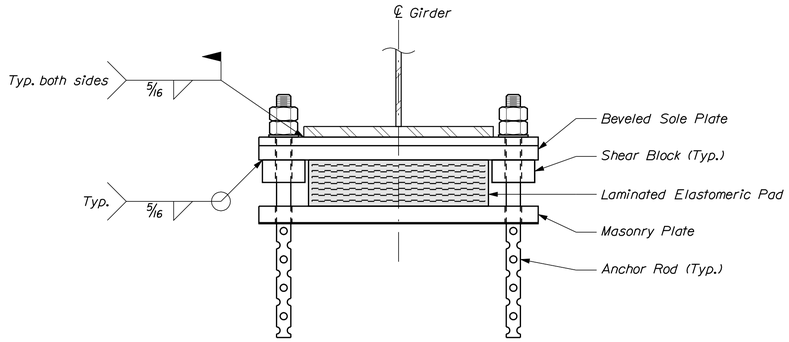

EXPANSION BEARING ELEVATION

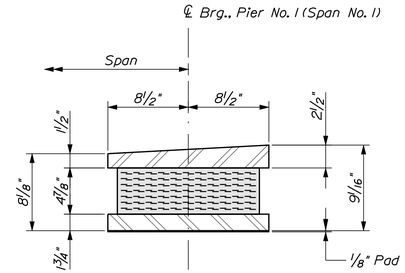

EXPANSION BEARING SECTION

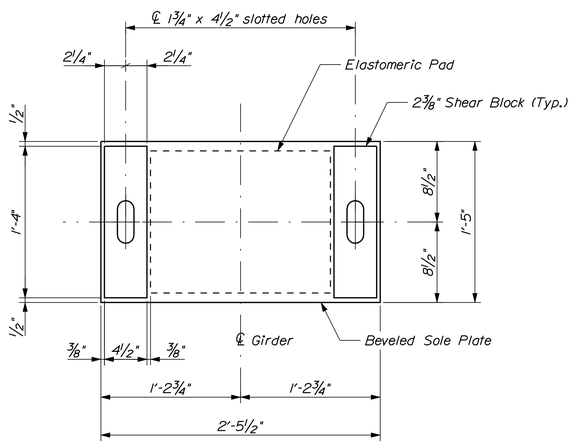

EXPANSION SOLE PLATE PLAN

Looking up at bottom of Beveled Sole Plate

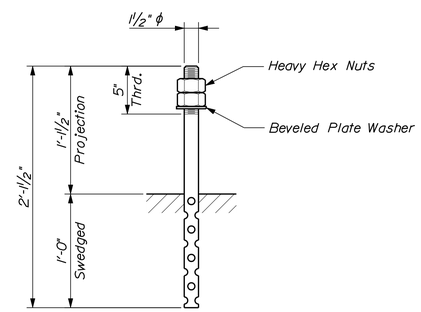

EXPANSION ANCHOR ROD DETAIL

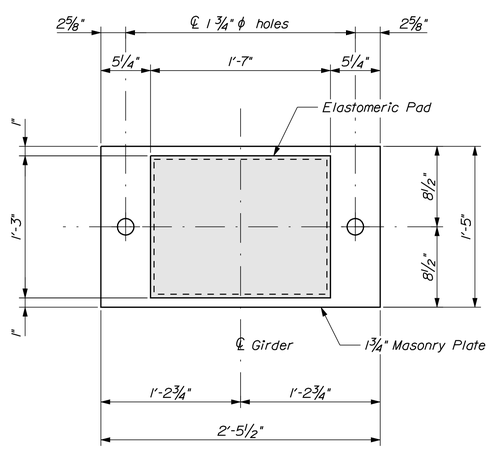

EXPANSION MASONRY PLATE PLAN

Showing laminated elastomeric pad

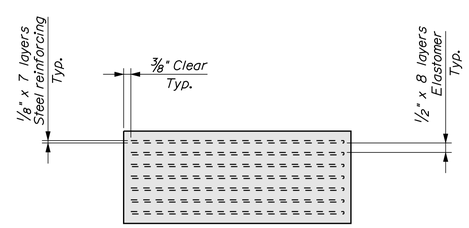

ELASTOMERIC PAD SECTION

STATE OF MAINE
DEPARTMENT OF TRANSPORTATION

AC-BH-1267(400)

WIN 12674.00

BRIDGE NO. 2506

BRIDGE PLANS

PROJ. MANAGER	N. Benoit			
DESIGN-DETAILED	B. Reeves	BY	DATE	
CHECKED-REVIEWED	E. Caswell	D. Domren	Sept. 2012	SIGNATURE
DESIGN2-DETAILED2	------	------	------	
DESIGN3-DETAILED3	------	------	------	P.E. NUMBER
REVISIONS 1	------	------	------	
REVISIONS 2	------	------	------	
REVISIONS 3	------	------	------	DATE
REVISIONS 4	------	------	------	
FIELD CHANGES	------	------	------	

MAINE KENNEBEC BRIDGE
KENNEBEC RIVER
RICHMOND, SAGADAHOC CTY. DRESDEN, LINCOLN CTY.

EXPANSION BEARINGS ~ SP. NO. 1

SHEET NUMBER

141

OF 238

Filename: ...\141_Bearings_Span No. 1 Expansion.dgn Division: BRIDGE Username: dana.domren Date: 3/27/2013

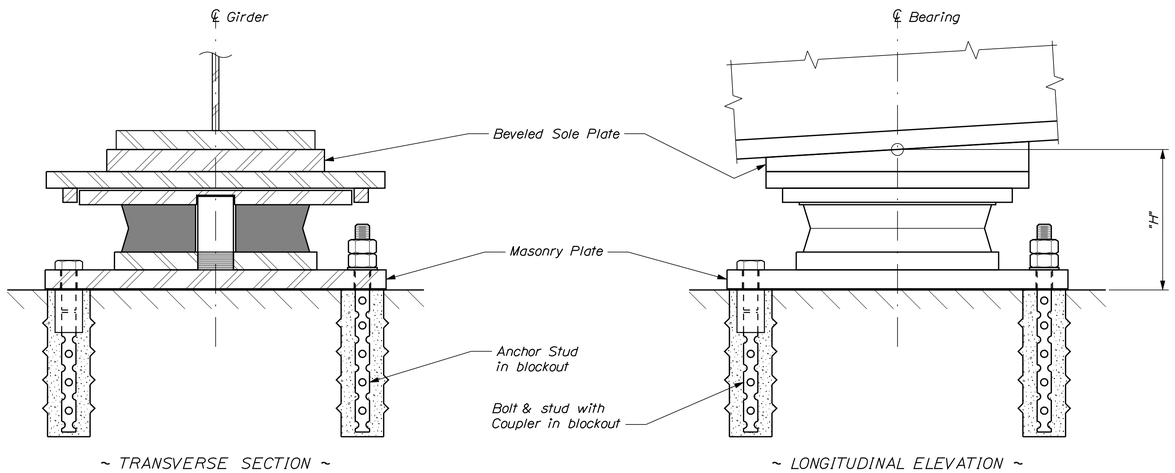

EXPANSION BEARING

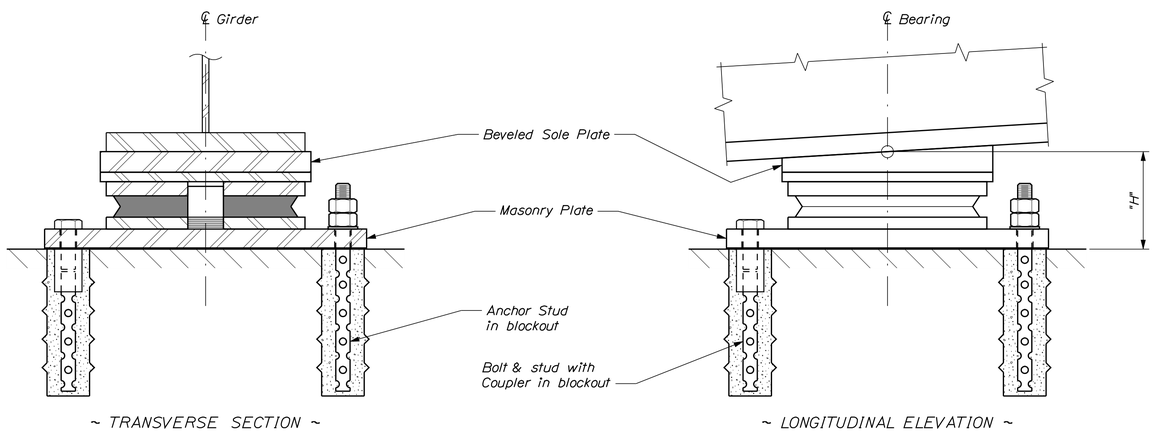

FIXED BEARING

DISC BEARING NOTES

1. Refer to the Special Provisions for design, materials, fabrication and general construction requirements.

2. The actual dimension "H" shall be the responsibility of the Contractor. Dimensions and sizes of plates not shown are dependent on design loads, capacity and the manufacturer of the bearings. The shop drawings, prepared by the manufacturer, shall provide all pertinent bearing information. The final bridge seat elevations shall be determined by the Contractor and submitted with the shop drawings for approval prior to construction of the substructure units.

3. Masonry plates shall be placed on 1/8" thick preformed pads in accordance with the specifications.

4. All steel, unless otherwise specified, shall meet the requirements of ASTM A709/A709M, Grade 50W.

5. Anchor rods shall meet the requirements of ASTM F1554, Grade 105 and shall be swedged on the embedded portion of the rod.

6. Anchor bolts shall meet the requirements of ASTM A325, Type 3.

7. Heavy hex nuts for anchor rods shall meet the requirements of ASTM A563M, Class 5.

8. Anchor bolts, rods, washers, nuts and shear pins shall be galvanized to ASTM A153 or ASTM B695, Class 50, Type 1. Payment for galvanizing will be considered incidental to the disc bearing pay items.

9. Anchor rod spacing shall be coordinated with the bearing manufacturer.

10. Bearing anchorage shall be either Anchor Stud with double nuts and washers in blockout, or Bolt & Stud with Coupler in blockout, at the Contractor's option.

11. Bearing installation shall be in strict conformance with the Special Provisions and the manufacturer's recommendations.

12. The abbreviation "PTFE" indicates polytetraflouroethylene.

13. PTFE shall be unfilled.

14. PTFE minimum bearing pressure shall be 3 ksi under total service loading.

15. The design temperature range shall be 125 °F (-20 °F to 105 °F).

16. For all bearings, all steel located below the PTFE sliding surface shall be coated in accordance with Special Provision, Section 506, Protective Coating - Steel (Thermal Spray Coating). All remaining steel shall be coated in accordance with Special Provisions, Section 506, Protective Coating - Steel (Zinc Rich Coating System). Payment for Coatings for Disc Bearings will be considered incidental to Item 523.5551, Pot or Disc Bearings, Fixed, or Item 523.5552, Pot or Disc Bearings, Expansion as applicable.

17. All bearings shall be marked prior to shipping. The marks shall include the bearing location on the bridge, and a direction arrow that points upstation. All marks shall be permanent and shall be visible after the bearing is installed.

18. In the Bearing Setting Corrections section of the "Disc Bearing Table," a negative dimension indicates a direction away from the nearer expansion joint. A positive dimension indicates a direction toward the nearer expansion joint.

19. Temperatures shown in the bearing setting corrections section of the "Disc Bearing Table" are those of the steel girders and not necessarily the ambient air temperature.

20. Design of the sole plates and masonry plates is the responsibility of the Bearing Manufacturer. Payment for these shall be made under Item 523.5551, Pot or Disc Bearings, Fixed or Item 523.5552, Pot or Disc Bearings, Expansion as applicable.

21. Sole plate shall be beveled according to the grade defined at each substructure location in the Disc Bearing Table.

22. Strength Limit State rotations shown in the Disc Bearing Design Table do not include an allowance for uncertainties of 0.005 radians, as defined in AASHTO LRFD Bridge Design Specifications, 6th Edition 2012.

23. Pier No. 4 bearings shall be welded to the girder prior to welding of any other bearings. Bearing stiffeners at Pier No. 4 shall be in line with the centerline of bearing at the time of welding.

24. Piers No. 3 and No. 5 bearings shall be welded to the girders at 45 °F ± 20 °F and shall be reset if the structural steel was set outside of this temperature range.

25. The maximum difference in temperature at the time of welding for any two bearings at each pier shall be 10 °F and shall remain within the temperature range specified in the previous note.

27. Bearings shall be designed with a thermal load factor of 1.0.

28. Longitudinal horizontal forces do not include friction forces.

DISC BEARING DESIGN TABLE

Location	Bearing Type	Design Loads Per Bearing (kips)										Dim. "H" (in.) (Note No. 2)	Design Rotation (radians) (Note No. 22)		Total Long. Movement (in.)	Sole Plate Bevel
		Vertical				Horizontal										
		Strength	Extreme Event	Service		Strength		Extreme Event		Service						
		Total Load	Total Load	Dead Load	Total Load	Longitudinal (Note No. 28)	Transverse	Longitudinal (Note No. 28)	Transverse	Longitudinal (Note No. 28)	Transverse		Dead Load	Live Load		
Pier No. 1	Uni - directional	465	231	141	307	18	35	31	3	13	12	8	0.016	0.007	8	6%
Pier No. 2	Uni - directional	1263	773	511	861	25	50	38	35	15	16	12	0.008	0.005	6.25	6%
Pier No. 3	Fixed	1265	772	502	862	30	59	27	61	17	19	8	0.007	0.006	--	3.5%
Pier No. 4	Fixed	1270	778	503	865	30	59	31	79	17	19	8	0.007	0.006	--	-3.5%
Pier No. 5	Fixed	1265	768	502	861	28	55	44	49	16	18	8	0.007	0.006	--	-6%
Pier No. 6	Uni - directional	1263	770	511	861	23	45	79	23	15	15	12	0.008	0.005	6.25	-6%
Abutment No. 2	Uni - directional	465	231	141	307	18	35	31	4	13	12	8	0.016	0.007	8	-6%

DISC BEARING SETTING CORRECTIONS TABLE

	Dimension "X"					
	15 °F	30 °F	45 °F	60 °F	75 °F	90 °F
Pier No. 1	- 1 3/4"	- 7/8"	0	7/8"	1 3/4"	2 5/8"
Pier No. 2	- 1 3/8"	- 3/4"	0	3/4"	1 3/8"	2"
Pier No. 3	-	-	-	-	-	-
Pier No. 4	-	-	-	-	-	-
Pier No. 5	-	-	-	-	-	-
Pier No. 6	- 1"	- 1/2"	0	1/2"	1"	1 1/2"
Abutment No. 2	- 1 1/2"	- 3/4"	0	3/4"	1 1/2"	2 1/4"

STATE OF MAINE
DEPARTMENT OF TRANSPORTATION

AC-BH-1267(400)

WIN 12674.00

BRIDGE NO. 2506

BRIDGE PLANS

		BY	DATE
PROJ. MANAGER	N. Benoit		
DESIGN-DETAILED	D. Eaton	D. Damren	Feb. 2013
CHECKED-REVIEWED	E. Caswell	------	Feb. 2013
DESIGN2-DETAILED2	------	------	------
DESIGN3-DETAILED3	------	------	------
REVISIONS 1	------	------	------
REVISIONS 2	------	------	------
REVISIONS 3	------	------	------
REVISIONS 4	------	------	------
FIELD CHANGES	------	------	------

SIGNATURE

P.E. NUMBER

DATE

MAINE KENNEBEC BRIDGE
KENNEBEC RIVER
RICHMOND, SAGADAHOC CTY. DRESDEN, LINCOLN CTY.

DISC BRGS. ~ SP. NO. 2 THRU 7

SHEET NUMBER
142
OF 238

Filename: ...\MSTA\142_Bearings_Disc.dgn Division: BRIDGE Username: dana.damren Date:3/27/2013

STRUCTURAL STEEL NOTES

1. Structural Steel was designed with a vertical construction load of 50 lb/sf and a lateral wind load of 50 lb/sf.

2. Refer to Utility Plans for Conduit Support System details.

3. Camber ordinates, as shown, are computed to compensate for all dead load deflections and for the curvature of the finished grade profile.

4. All web, flange, and field splice plates in tension or stress reversal areas shall be impact tested in accordance with T 243M/T 243 and AASHTO M270 and as given in Table 9. The test results shall meet the requirements given in Table 9, Zone 2.

5. No transverse butt weld splices will be allowed in the flange plates or web plates within 10 feet or 10 percent of the span length (whichever is greater) from the points of maximum negative moment or maximum positive moment. Butt weld splices in flanges shall be not less than one foot from transverse butt welds in the web plates and no transverse web or flange butt welds shall be located within one foot of other transverse welds (e.g. connection plates to web welds) on either flange or web. No transverse butt weld splices will be allowed in areas of stress reversal.

6. Sections of flange plates or web plates between transverse shop splices or between a transverse shop splice and a field splice shall be not less than 20 feet in length unless otherwise shown on the plans.

7. Bearing stiffeners shall be plumb after erection and dead loading of the structure. Intermediate web stiffeners may be either plumb or normal to the top flange.

8. Connection plates for diaphragms and crossframes shall have a minimum thickness of 1/2 inch.

9. Connection plates may be either plumb or normal to the top flange.

10. Connection plates and stiffeners shall be welded to the top and bottom flanges using a 5/16-in. fillet weld on both sides of the plate. (Standard Detail 504(21) ~ Tension Flange Connection for Diaphragms and Crossframes shall not be used.)

11. The "Drip Bar" detail shall be used on the high side of each pier and abutments on all girders.

12. Bolted field splice connections shall be made using 7/8-in. ASTM A 325 H.S. bolts. Hole size shall be 15/16 inch diameter. Bolt threads shall be excluded from the shear plane of the field splice connections.

13. Girder ends and end diaphragms adjacent to Finger Joints shall be coated to a distance of 10 feet from the centerline of bearing in accordance with Special Provisions Section 506, Protective Coating - Steel (Zinc Rich Coating System).

14. Lateral bracing is designed to control flange bending stresses due to wind load during erection of the structural steel. The lateral bracing is intended to be placed between the first pair of girders to be erected. If the Contractor chooses to erect a pair of girders other than G3 and G4 first, the location of the lateral bracing shall be modified and so shown on the shop drawings. No additional payment will be made for this change.

15. The Contractor shall remove the bottom flange lateral bracing, located in Spans No. 2 thru 7, after the concrete deck has been placed and cured. Bolt holes shall be closed by a method approved by the Resident. The Contractor shall leave the top flange lateral bracing, located in Span No. 1, in place.

16. The Contractor may eliminate the lateral bracing system by providing other methods of ensuring stability and controlling wind loads during erection of the structural steel and placement of the concrete deck. If the Contractor chooses to eliminate the lateral bracing system, the Contractor shall submit for approval a plan which includes any relevant calculations and working drawings, signed and sealed by a Professional Engineer.

17. After placement of the superstructure concrete, the abutments and piers shall be thoroughly cleaned of all stains by a method approved by the Resident. Payment will be considered incidental to Contract items.

STRUCTURAL STEEL MATERIALS

Webs and Flanges at Piers . . . . . ASTM A 709, Grade HPS 70W
All Other Material (unless noted) . . . . . ASTM A 709, Grade 50W
High Strength Bolts . . . . . ASTM A 325, Type 3

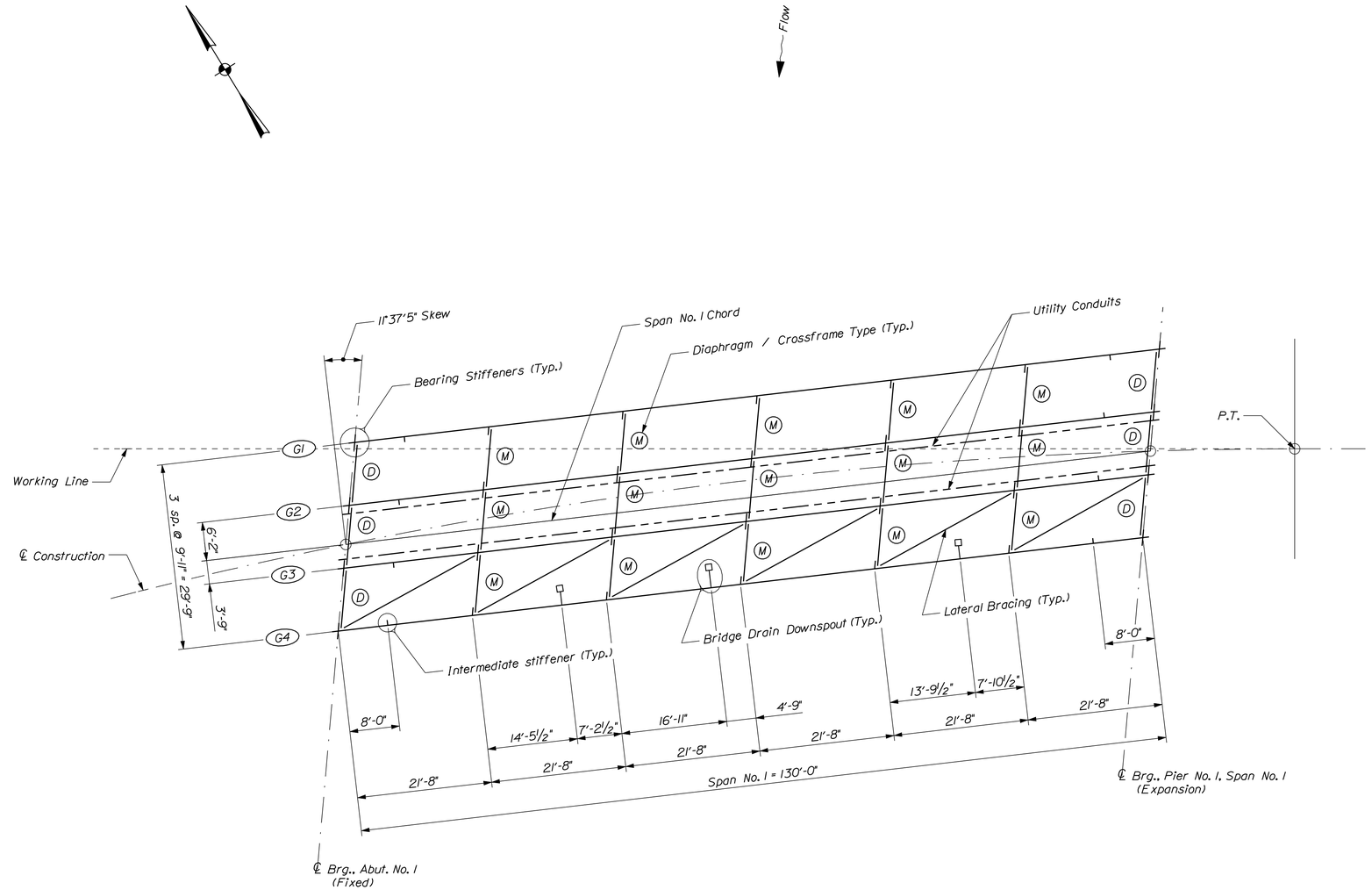

FRAMING PLAN ~ SPAN NO. 1
Dimensions are horizontal

STATE OF MAINE
DEPARTMENT OF TRANSPORTATION

AC-BH-1267(400)

WIN 12674.00

BRIDGE NO. 2506

BRIDGE PLANS

PROJ. MANAGER	N. Benoit	BY	DATE
DESIGN-DETAILED	B. Reeves	D. Domren	June 2012
CHECKED-REVIEWED	E. Caswell	B. Nichols	6/12/13
DESIGN2-DETAILED2	------	------	------
DESIGN3-DETAILED3	------	------	------
REVISIONS 1	------	------	------
REVISIONS 2	------	------	------
REVISIONS 3	------	------	------
REVISIONS 4	------	------	------
FIELD CHANGES	------	------	------

SIGNATURE

P.E. NUMBER

DATE

MAINE KENNEBEC BRIDGE
KENNEBEC RIVER
RICHMOND, SAGADAHOC CTY. DRESDEN, LINCOLN CTY.

FRAMING PLAN SPAN NO. 1

SHEET NUMBER
143
OF 238

Filename: ...\143_Framing Plan Span No. 1.dgn Division: BRIDGE Username: dana.domren Date:4/2/2013

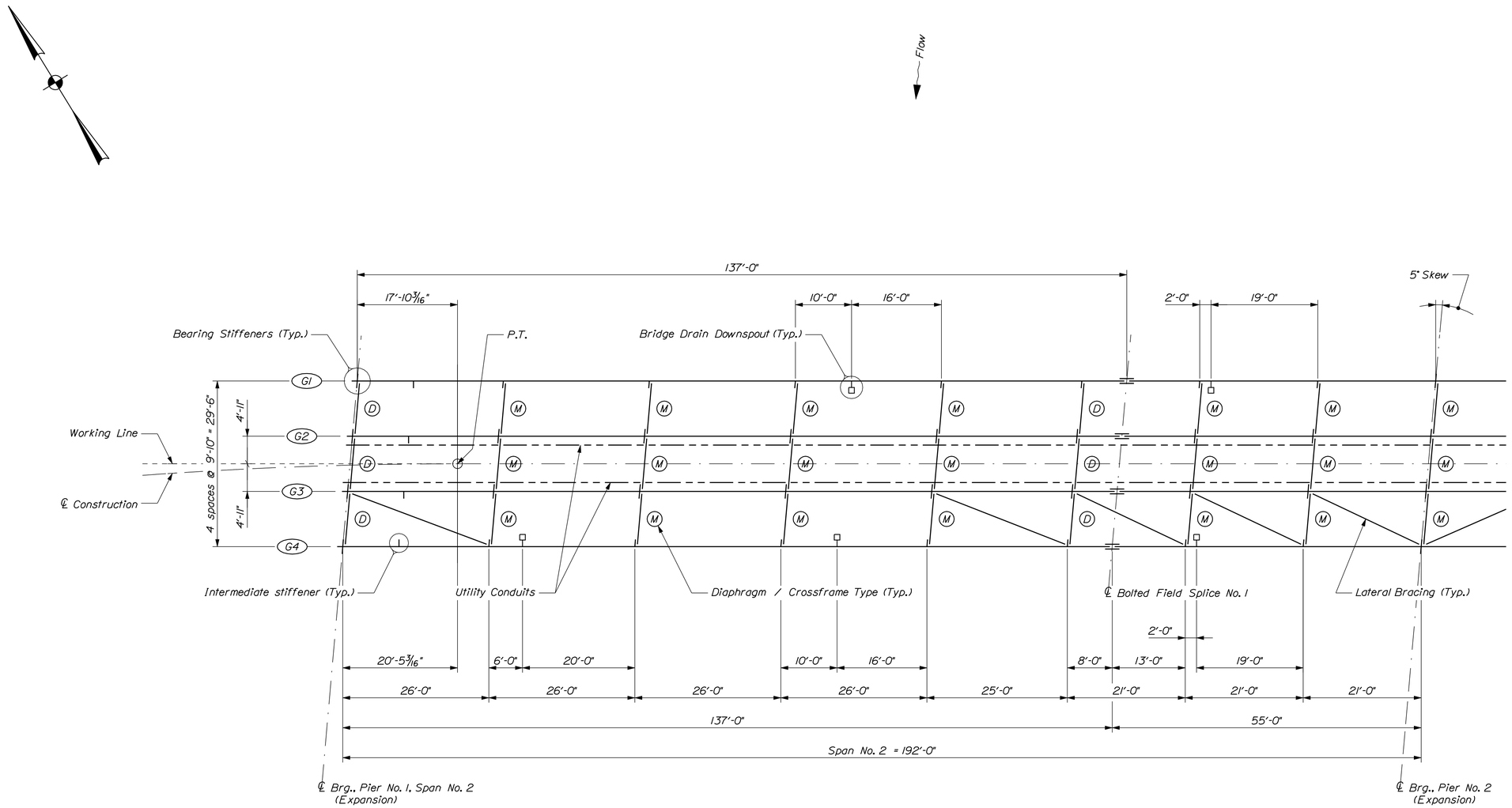

FRAMING PLAN ~ SPAN NO. 2

Dimensions are horizontal

STATE OF MAINE
DEPARTMENT OF TRANSPORTATION

AC-BH-1267(400)

WIN 12674.00

BRIDGE NO. 2506

BRIDGE PLANS

		BY	DATE
PROJ. MANAGER	N. Benoit		
DESIGN-DETAILED	D. Eaton	D. Damren	June 2012
CHECKED-REVIEWED	E. Caswell	B. Nichols	6/12/13
DESIGN2-DETAILED2	------	------	------
DESIGN3-DETAILED3	------	------	------
REVISIONS 1	------	------	------
REVISIONS 2	------	------	------
REVISIONS 3	------	------	------
REVISIONS 4	------	------	------
FIELD CHANGES	------	------	------

SIGNATURE

P.E. NUMBER

DATE

MAINE KENNEBEC BRIDGE
KENNEBEC RIVER
RICHMOND, SAGADAHOC CTY. DRESDEN, LINCOLN CTY.

FRAMING PLAN SPAN NO. 2

SHEET NUMBER

144

OF 238

Filename: ...\144_Framing Plan Span No. 2.dgn Division: BRIDGE Username: dana.damren Date:4/2/2013

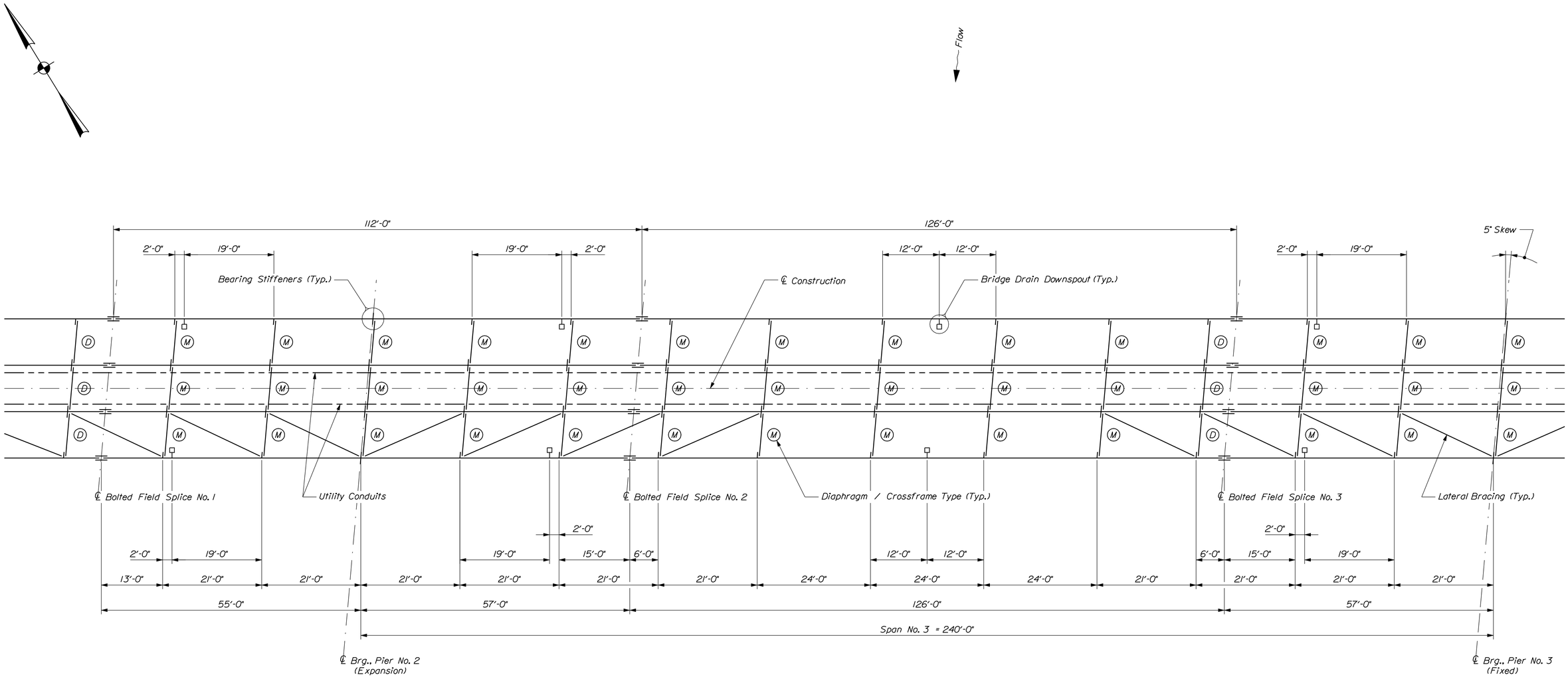

FRAMING PLAN ~ SPAN NO. 3

Dimensions are horizontal

Filename: ...\145_Framing Plan Span No. 3.dgn Division: BRIDGE Username: dana.damren Date:4/2/2013

MAINE KENNEBEC BRIDGE
KENNEBEC RIVER
RICHMOND, SAGADAHOC CTY. DRESDEN, LINCOLN CTY.

FRAMING PLAN SPAN NO. 3

PROJ. MANAGER	N. Benoit	BY	DATE
DESIGN-DETAILED	D. Eaton	D. Damren	June 2012
CHECKED-REVIEWED	E. Caswell	B. Nichols	6/12 3/13
DESIGN2-DETAILED2	------	------	------
DESIGN3-DETAILED3	------	------	------
REVISIONS 1	------		------
REVISIONS 2	------		------
REVISIONS 3	------		------
REVISIONS 4	------		------
FIELD CHANGES	------		------

SIGNATURE

P.E. NUMBER

DATE

STATE OF MAINE
DEPARTMENT OF TRANSPORTATION

AC-BH-1267(400)

BRIDGE NO. 2506 WIN 12674.00 BRIDGE PLANS

SHEET NUMBER 145 OF 238

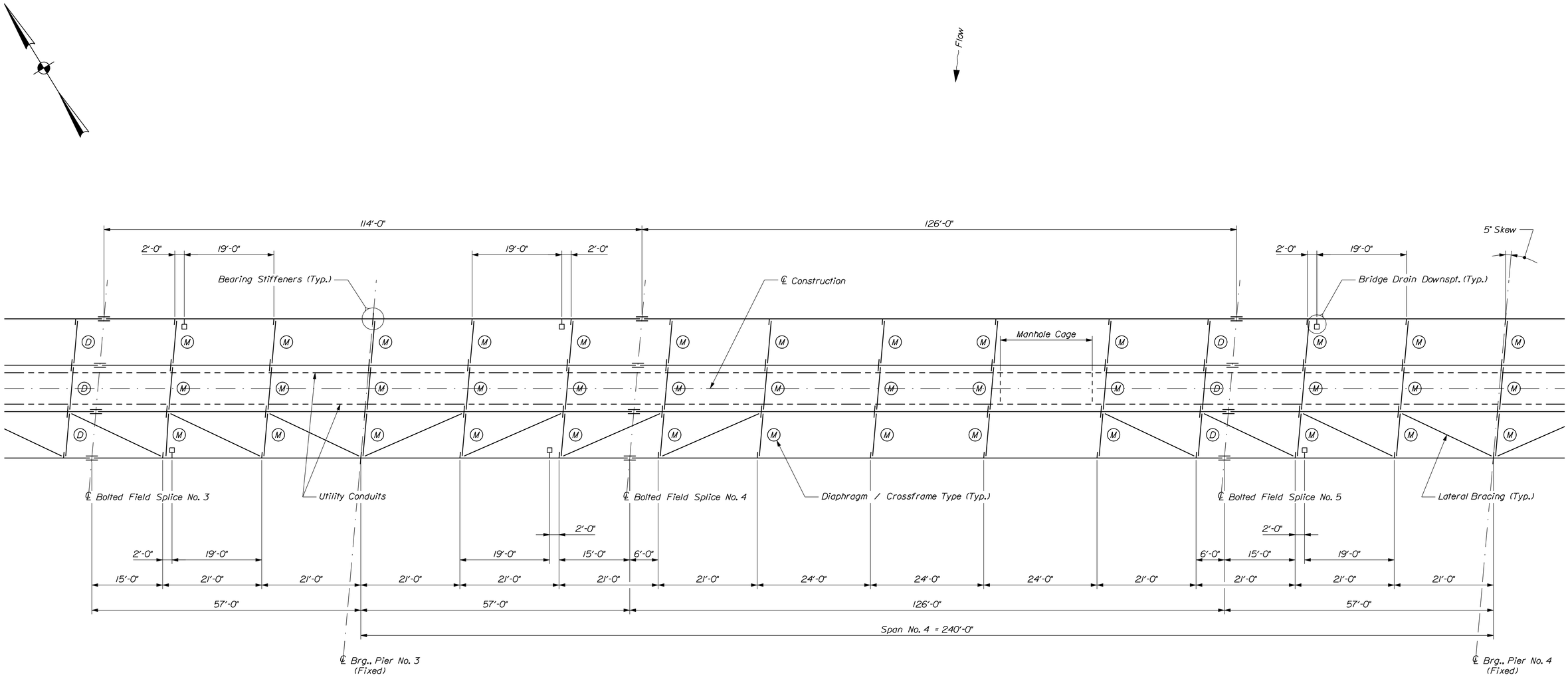

FRAMING PLAN ~ SPAN NO. 4

Dimensions are horizontal

Filename: ...\146_Framing Plan Span No. 4.dgn Division: BRIDGE Username: dana.damren Date:4/2/2013

MAINE KENNEBEC BRIDGE
KENNEBEC RIVER
RICHMOND, SAGADAHOC CTY. DRESDEN, LINCOLN CTY.

FRAMING PLAN SPAN NO. 4

PROJ. MANAGER	N. Benoit	BY	DATE
DESIGN-DETAILED	D. Eaton	D. Damren	June 2012
CHECKED-REVIEWED	E. Caswell	B. Nichols	6/12 3/13
DESIGN2-DETAILED2	------	------	------
DESIGN3-DETAILED3	------	------	------
REVISIONS 1	------		------
REVISIONS 2	------		------
REVISIONS 3	------		------
REVISIONS 4	------		------
FIELD CHANGES	------		------

SIGNATURE

P.E. NUMBER

DATE

STATE OF MAINE
DEPARTMENT OF TRANSPORTATION

AC-BH-1267(400)

BRIDGE NO. 2506 WIN 12674.00 BRIDGE PLANS

SHEET NUMBER 146 OF 238

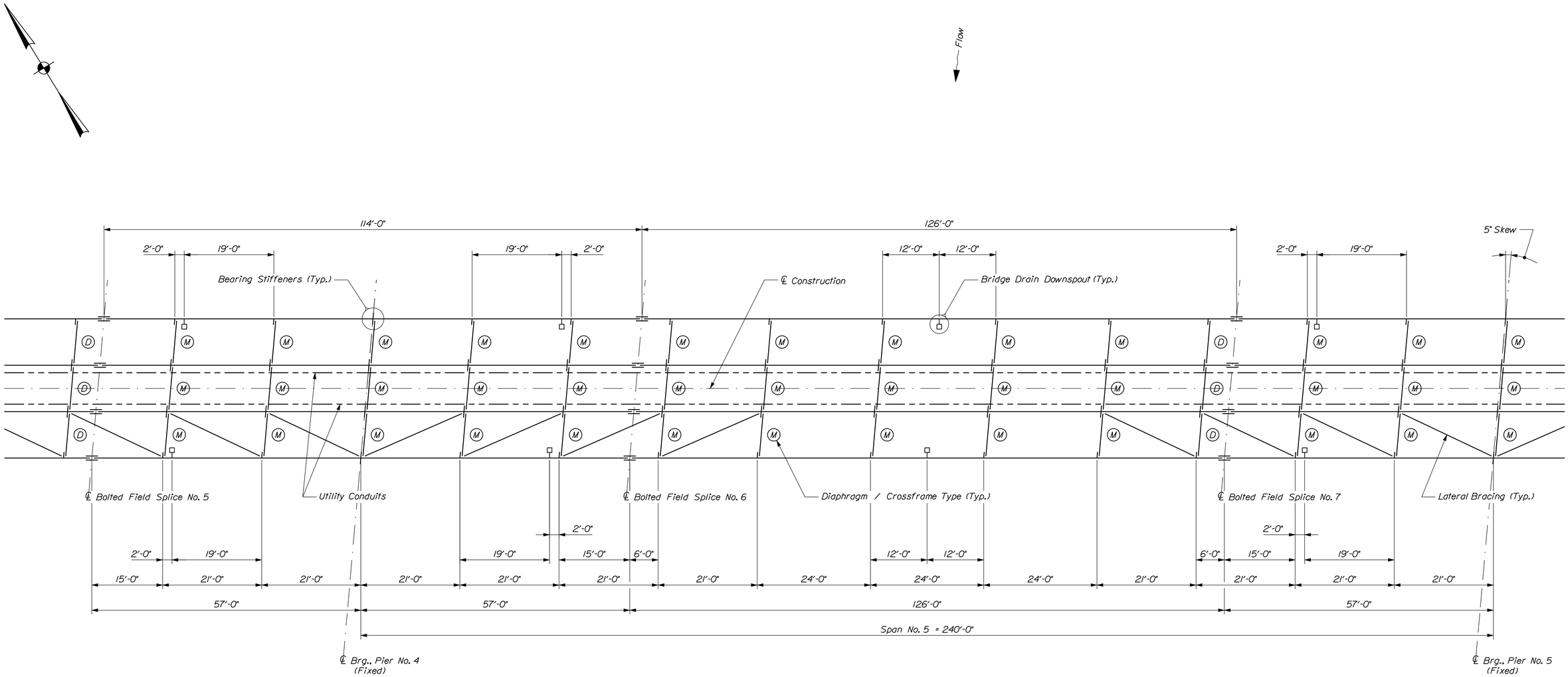

FRAMING PLAN ~ SPAN NO. 5

Dimensions are horizontal

Filename: ...\147_Framing Plan Span No. 5.dgn Division: BRIDGE Username: dana.damren Date:4/2/2013

MAINE KENNEBEC BRIDGE
KENNEBEC RIVER
RICHMOND, SAGADAHOC CTY. DRESDEN, LINCOLN CTY.

FRAMING PLAN SPAN NO. 5

PROJ. MANAGER	N. Benoit	BY	DATE
DESIGN-DETAILED	D. Eaton	D. Damren	June 2012
CHECKED-REVIEWED	E. Caswell	B. Nichols	6/12 3/13
DESIGN2-DETAILED2	------	------	------
DESIGN3-DETAILED3	------	------	------
REVISIONS 1	------		------
REVISIONS 2	------		------
REVISIONS 3	------		------
REVISIONS 4	------		------
FIELD CHANGES	------		------

SIGNATURE

P.E. NUMBER

DATE

STATE OF MAINE
DEPARTMENT OF TRANSPORTATION

AC-BH-1267(400)

BRIDGE NO. 2506 WIN 12674.00 BRIDGE PLANS

SHEET NUMBER 147 OF 238

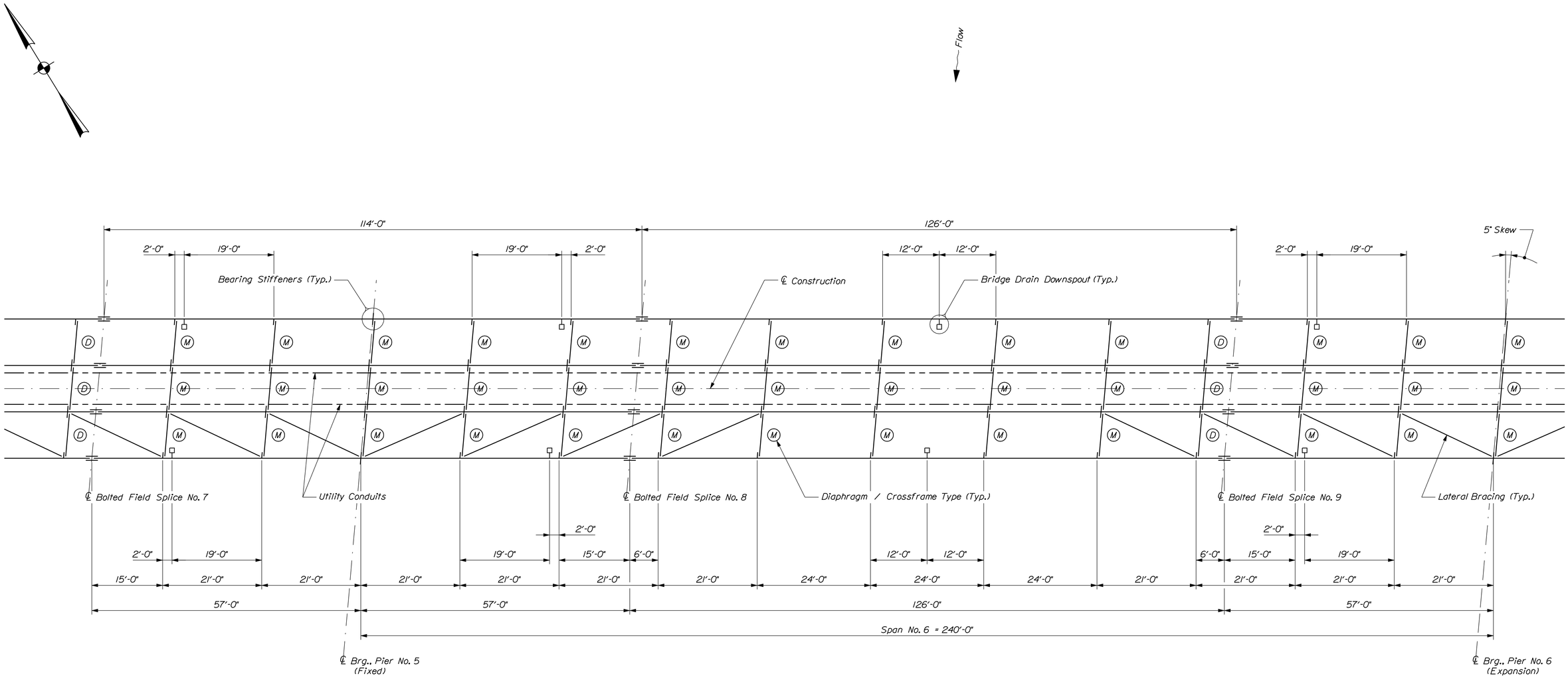

FRAMING PLAN ~ SPAN NO. 6

Dimensions are horizontal

Filename: ...\148_Framing Plan Span No. 6.dgn Division: BRIDGE Username: dana.damren Date:4/2/2013

MAINE KENNEBEC BRIDGE
KENNEBEC RIVER
RICHMOND, SAGADAHOC CTY. DRESDEN, LINCOLN CTY.

FRAMING PLAN SPAN NO. 6

PROJ. MANAGER	N. Benoit	BY	DATE
DESIGN-DETAILED	D. Eaton	D. Damren	June 2012
CHECKED-REVIEWED	E. Caswell	B. Nichols	6/12 3/13
DESIGN2-DETAILED2	------	------	------
DESIGN3-DETAILED3	------	------	------
REVISIONS 1	------		------
REVISIONS 2	------		------
REVISIONS 3	------		------
REVISIONS 4	------		------
FIELD CHANGES	------		------

SIGNATURE

P.E. NUMBER

DATE

STATE OF MAINE
DEPARTMENT OF TRANSPORTATION

AC-BH-1267(400)

BRIDGE NO. 2506 WIN 12674.00 BRIDGE PLANS

SHEET NUMBER 148 OF 238

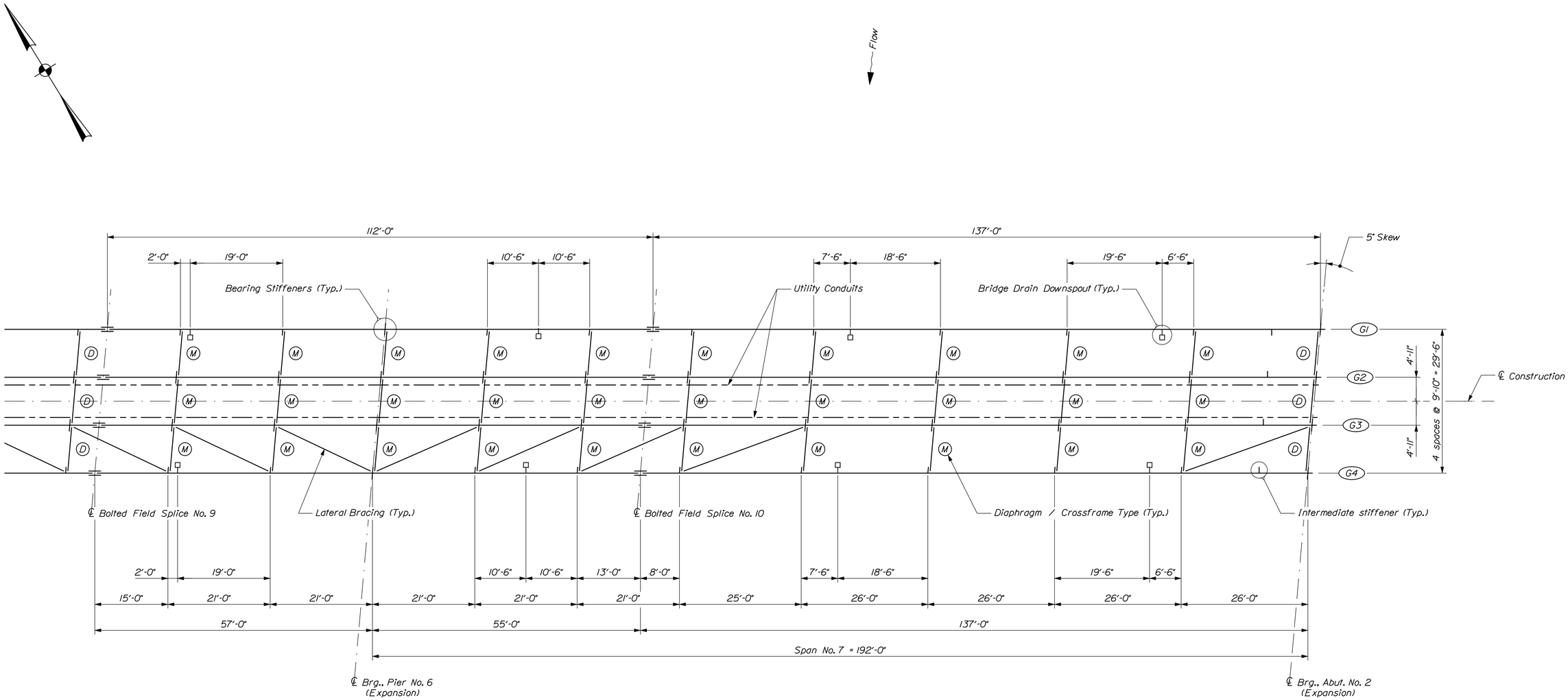

FRAMING PLAN ~ SPAN NO. 7

Dimensions are horizontal

Filename: ...\149_Framing Plan Span No. 7.dgn Division: BRIDGE Username: dana.damren Date:4/2/2013

MAINE KENNEBEC BRIDGE
KENNEBEC RIVER
RICHMOND, SAGADAHOC CTY. DRESDEN, LINCOLN CTY.

FRAMING PLAN SPAN NO. 7

PROJ. MANAGER	N. Benoit	BY	DATE
DESIGN-DETAILED	D. Eaton	D. Damren	June 2012
CHECKED-REVIEWED	E. Caswell	B. Nichols	6/12 3/13
DESIGN2-DETAILED2	------	------	------
DESIGN3-DETAILED3	------	------	------
REVISIONS 1	------		------
REVISIONS 2	------		------
REVISIONS 3	------		------
REVISIONS 4	------		------
FIELD CHANGES	------		------

SIGNATURE

P.E. NUMBER

DATE

STATE OF MAINE
DEPARTMENT OF TRANSPORTATION

AC-BH-1267(400)

BRIDGE NO. 2506 WIN 12674.00 BRIDGE PLANS

SHEET NUMBER 149 OF 238

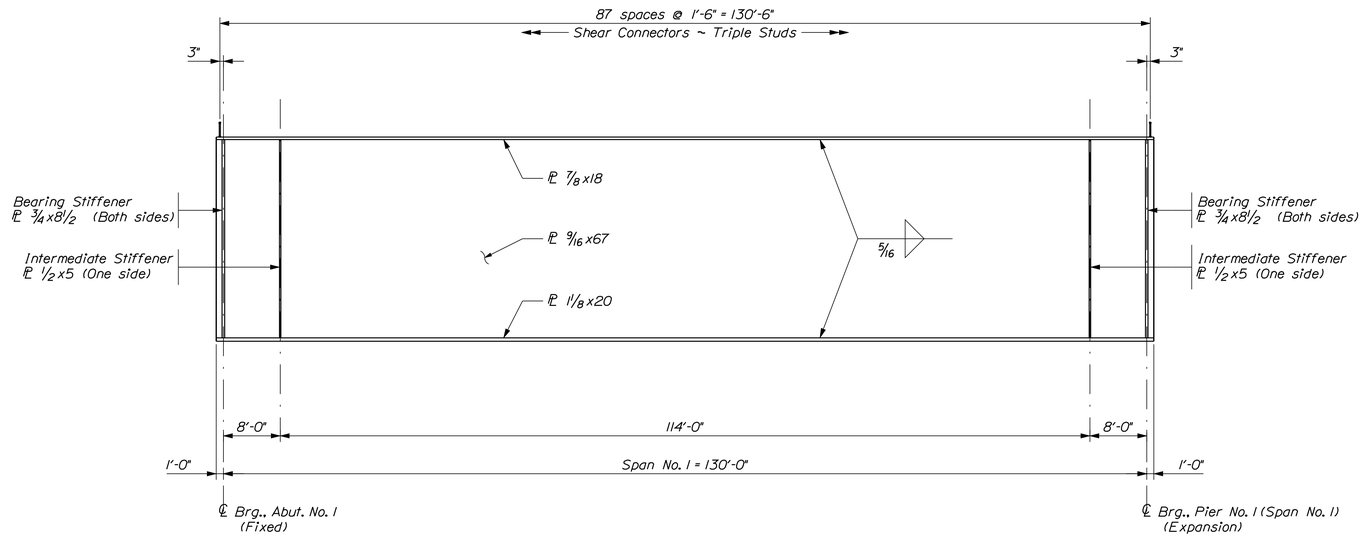

GIRDER ELEVATION ~ SPAN NO. 1

264 studs per girder x 4 girders = 1056 studs
Diaphragm & Crossframe Connection Plates shall be 1/2" thick

TABLE OF DEFLECTIONS ~ GIRDER G1 (Inches)

		Span No. 1									
	℄ A1	13.0'	26.0'	39.0'	52.0'	65.0	78.0'	91.0'	104.0'	117.0'	℄ P1(1)
Steel Dead Load	0	0.34	0.63	0.87	1.02	1.07	1.02	0.87	0.63	0.34	0
Fluid Dead Load	0	1.24	2.35	3.22	3.77	3.96	3.77	3.22	2.35	1.24	0
Superimposed Dead Load	0	0.33	0.63	0.86	1.01	1.06	1.01	0.87	0.64	0.33	0

TABLE OF DEFLECTIONS ~ GIRDERS G2 & G3 (Inches)

		Span No. 1									
		13.0'	26.0'	39.0'	52.0'	65.0	78.0'	91.0'	104.0'	117.0'	℄ P1(1)
Steel Dead Load		0.34	0.63	0.87	1.02	1.07	1.02	0.87	0.63	0.34	0
Fluid Dead Load		1.40	2.66	3.64	4.26	4.47	4.26	3.64	2.66	1.40	0
Superimposed Dead Load		0.32	0.61	0.83	0.97	1.03	0.97	0.83	0.61	0.32	0

TABLE OF DEFLECTIONS ~ GIRDER G4 (Inches)

		Span No. 1									
	℄ A1	13.0'	26.0'	39.0'	52.0'	65.0	78.0'	91.0'	104.0'	117.0'	℄ P1(1)
Steel Dead Load	0	0.34	0.63	0.87	1.02	1.07	1.02	0.87	0.63	0.34	0
Fluid Dead Load	0	1.04	1.97	2.69	3.14	3.3	3.14	2.68	1.96	1.04	0
Superimposed Dead Load	0	0.36	0.68	0.94	1.10	1.16	1.1	0.94	0.68	0.36	0

STATE OF MAINE
DEPARTMENT OF TRANSPORTATION

AC-BH-1267(400)

WIN 12674.00

BRIDGE NO. 2506

BRIDGE PLANS

PROJ. MANAGER	N. Benoit	BY	DATE
DESIGN-DETAILED	B. Reeves	D. Domren	June 2012
CHECKED-REVIEWED	E. Caswell	B. Nichols	6/12 3/13
DESIGN2-DETAILED2	------	------	------
DESIGN3-DETAILED3	------	------	------
REVISIONS 1	------	------	------
REVISIONS 2	------	------	------
REVISIONS 3	------	------	------
REVISIONS 4	------	------	------
FIELD CHANGES	------	------	------

SIGNATURE

P.E. NUMBER

DATE

MAINE KENNEBEC BRIDGE
KENNEBEC RIVER
RICHMOND, SAGADAHOC CTY. DRESDEN, LINCOLN CTY.

GIRDER ELEV. & DEFLECTIONS

SHEET NUMBER
150
OF 238

Filename: ...\MSTA\150_Girder Elevation.dgn Division: BRIDGE Username: dana.domren Date:3/27/2013

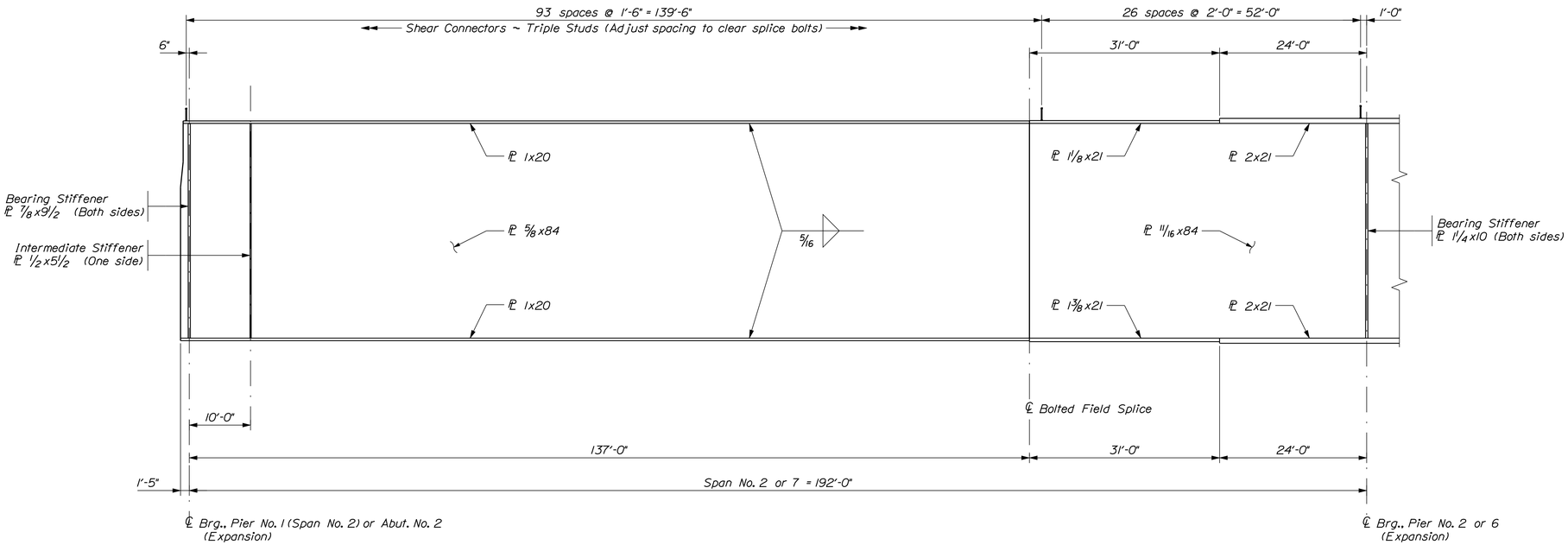

GIRDER ELEVATION ~ SPAN NO. 2 or 7

360 studs per girder x 4 girders x 2 Spans = 2880 studs

Diaphragm & Crossframe Connection Plates shall be 1/2" thick

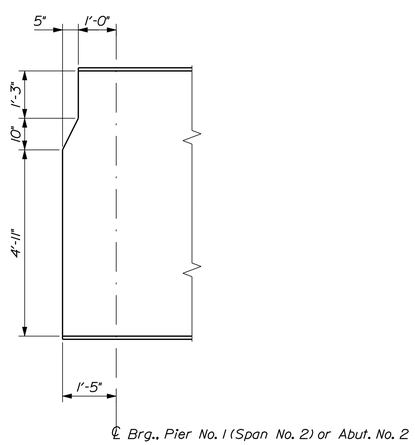

GIRDER END ELEVATION ~ SPAN NO. 2 or 7

STATE OF MAINE
DEPARTMENT OF TRANSPORTATION

AC-BH-1267(400)

WIN 12674.00

BRIDGE NO. 2506

BRIDGE PLANS

			DATE
PROJ. MANAGER	N. Benoit	BY	
DESIGN-DETAILED	D. Eaton	D. Damren	June 2012
CHECKED-REVIEWED	E. Caswell	B. Nichols	6/12/13
DESIGN2-DETAILED2	------	------	------
DESIGN3-DETAILED3	------	------	------
REVISIONS 1	------	------	------
REVISIONS 2	------	------	------
REVISIONS 3	------	------	------
REVISIONS 4	------	------	------
FIELD CHANGES	------	------	------

SIGNATURE

P.E. NUMBER

DATE

MAINE KENNEBEC BRIDGE
KENNEBEC RIVER
RICHMOND, SAGADAHOC CTY. DRESDEN, LINCOLN CTY.

GIRDER ELEVATION

SHEET NUMBER

151

OF 238

Filename: ...\MSTA\151_Girder Elevation.dgn Division: BRIDGE Username: dana.damren Date:3/27/2013

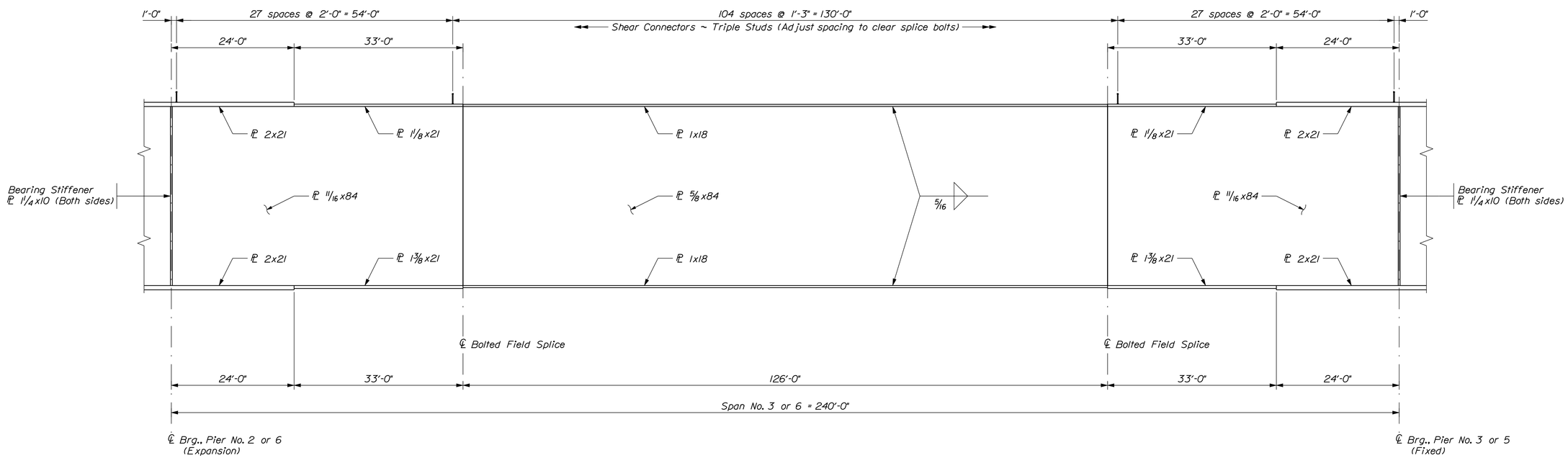

GIRDER ELEVATION ~ SPAN NO. 3 or 6

477 studs per girder x 4 girders x 2 Spans = 3816 studs
Diaphragm & Crossframe Connection Plates shall be 1/2" thick

TABLE OF DEFLECTIONS ~ EXTERIOR GIRDERS (Inches)

		Piece No. 1												Piece No. 2										Piece No. 3										
	℄ P1(2)	11.42'	22.83'	34.25'	45.67'	57.08'	68.5'	79.91'	91.33'	102.75'	114.16'	125.58'	FS1	11.0'	22.0'	33'.0	44.0'	℄ P2	66.4'	77.8'	89.2'	100.6'	FS2	11.46'	22.92'	34.38'	45.84'	57.30'	68.76'	80.22'	91.68'	103.14'	114.60'	FS3
Steel Dead Load	0.00	0.28	0.54	0.78	0.96	1.10	1.18	1.20	1.17	1.08	0.95	0.79	0.61	0.43	0.26	0.13	0.04	0.00	0.02	0.10	0.23	0.38	0.56	0.74	0.90	1.03	1.13	1.18	1.18	1.13	1.04	0.91	0.75	0.57
Fluid Dead Load	0.00	0.81	1.56	2.22	2.76	3.14	3.37	3.42	3.32	3.06	2.68	2.21	1.68	1.18	0.71	0.34	0.10	0.00	0.08	0.32	0.69	1.16	1.68	2.20	2.69	3.08	3.37	3.51	3.52	3.37	3.10	2.70	2.22	1.70
Superimposed Dead Load	0.00	0.28	0.53	0.76	0.94	1.07	1.14	1.17	1.14	1.05	0.92	0.76	0.59	0.41	0.25	0.12	0.03	0.00	0.03	0.13	0.28	0.44	0.63	0.82	0.98	1.13	1.22	1.27	1.27	1.22	1.13	0.98	0.82	0.63

TABLE OF DEFLECTIONS ~ EXTERIOR GIRDERS (Inches)

		Piece No. 4											Piece No. 5										Piece No. 6									
	FS3	11.4'	22.8'	34.2'	45.6'	℄ P3	68.4'	79.8'	91.2'	102.6'	FS4	11.46'	22.92'	34.38'	45.84'	57.30'	68.76'	80.22'	91.68'	103.14'	114.60'	FS5	11.4'	22.8'	34.2'	45.6'	℄ P4	68.4'	79.8'	91.2'	102.6'	FS6
Steel Dead Load	0.57	0.40	0.24	0.11	0.03	0.00	0.04	0.12	0.26	0.42	0.60	0.78	0.94	1.08	1.17	1.22	1.22	1.17	1.07	0.94	0.77	0.59	0.41	0.25	0.12	0.03	0.00	0.03	0.12	0.25	0.41	0.59
Fluid Dead Load	1.70	1.18	0.71	0.34	0.09	0.00	0.10	0.35	0.73	1.20	1.73	2.26	2.75	3.14	3.43	3.57	3.57	3.42	3.14	2.74	2.25	1.72	1.20	0.72	0.34	0.09	0.00	0.09	0.34	0.72	1.20	1.72
Superimposed Dead Load	0.63	0.44	0.27	0.13	0.03	0.00	0.03	0.13	0.27	0.44	0.63	0.82	0.98	1.13	1.22	1.27	1.27	1.22	1.13	0.98	0.82	0.63	0.44	0.27	0.13	0.03	0.00	0.03	0.13	0.27	0.44	0.63

TABLE OF DEFLECTIONS ~ EXTERIOR GIRDERS (Inches)

		Piece No. 7											Piece No. 8										Piece No. 9									
	FS6	11.46'	22.92'	34.38'	45.84'	57.30'	68.76'	80.22'	91.68'	103.14'	114.60'	FS7	11.4'	22.8'	34.2'	45.6'	℄ P5	68.4'	79.8'	91.2'	102.6'	FS8	11.46'	22.92'	34.38'	45.84'	57.30'	68.76'	80.22'	91.68'	103.14'	114.60'	FS9
Steel Dead Load	0.59	0.77	0.94	1.07	1.17	1.22	1.22	1.17	1.08	0.94	0.78	0.60	0.42	0.26	0.12	0.04	0.00	0.03	0.11	0.24	0.40	0.57	0.75	0.91	1.04	1.13	1.18	1.18	1.13	1.03	0.90	0.74	0.56
Fluid Dead Load	1.72	2.25	2.74	3.14	3.42	3.57	3.57	3.43	3.14	2.74	2.26	1.73	1.20	0.73	0.35	0.10	0.00	0.09	0.34	0.71	1.18	1.70	2.22	2.70	3.10	3.37	3.52	3.51	3.37	3.08	2.68	2.20	1.68
Superimposed Dead Load	0.63	0.82	0.98	1.13	1.22	1.27	1.27	1.22	1.13	0.98	0.82	0.63	0.44	0.27	0.13	0.03	0.00	0.03	0.13	0.27	0.44	0.63	0.82	0.98	1.13	1.22	1.27	1.27	1.22	1.13	0.98	0.82	0.63

TABLE OF DEFLECTIONS ~ EXTERIOR GIRDERS (Inches)

		Piece No. 10										Piece No. 11											
	FS9	11.4'	22.8'	34.2'	45.6'	℄ P6	68.0'	79.0'	90.0'	101.0'	FS10	11.42'	22.83'	34.25'	45.67'	57.08'	68.5'	79.91'	91.33'	102.75'	114.16'	125.58'	℄ A2
Steel Dead Load	0.56	0.38	0.23	0.10	0.02	0.00	0.04	0.13	0.26	0.43	0.61	0.79	0.95	1.08	1.17	1.20	1.18	1.10	0.96	0.78	0.54	0.28	0.00
Fluid Dead Load	1.68	1.16	0.69	0.32	0.08	0.00	0.10	0.34	0.71	1.18	1.68	2.21	2.68	3.06	3.32	3.42	3.37	3.14	2.76	2.22	1.56	0.81	0.00
Superimposed Dead Load	0.63	0.44	0.28	0.13	0.03	0.00	0.03	0.12	0.25	0.41	0.59	0.76	0.92	1.05	1.14	1.17	1.14	1.07	0.94	0.76	0.53	0.28	0.00

STATE OF MAINE
DEPARTMENT OF TRANSPORTATION

AC-BH-1267(400)

WIN 12674.00

BRIDGE NO. 2506

BRIDGE PLANS

PROJ. MANAGER	N. Benoit	BY	DATE
DESIGN-DETAILED	D. Eaton	D. Damren	June 2012
CHECKED-REVIEWED	E. Caswell	B. Nichols	6/12 3/13
DESIGN2-DETAILED2	------	------	------
DESIGN3-DETAILED3	------	------	------
REVISIONS 1	------	------	------
REVISIONS 2	------	------	------
REVISIONS 3	------	------	------
REVISIONS 4	------	------	------
FIELD CHANGES	------	------	------

SIGNATURE

P.E. NUMBER

DATE

MAINE KENNEBEC BRIDGE
KENNEBEC RIVER
RICHMOND, SAGADAHOC CTY. DRESDEN, LINCOLN CTY.

GIRDER ELEV. & DEFLECTIONS

SHEET NUMBER
152
OF 238

Filename: ...\MSTA\152_Girder Elevation.dgn Division: BRIDGE Username: dana.damren Date:3/27/2013

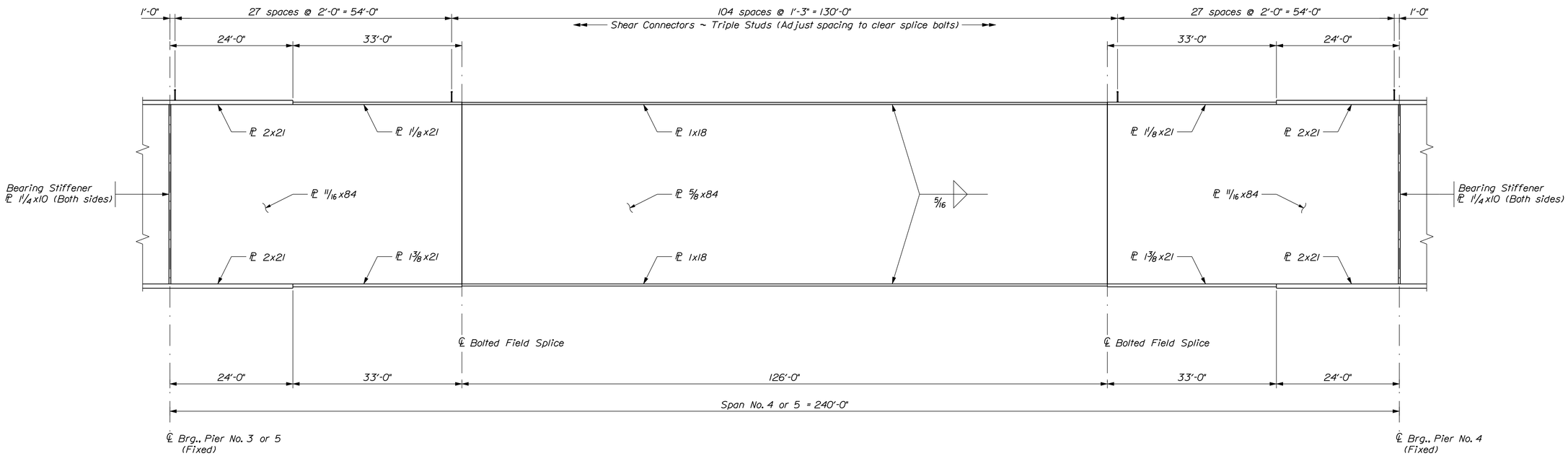

GIRDER ELEVATION ~ SPAN NO. 4 or 5

477 studs per girder x 4 girders x 2 Spans = 3816 studs
Diaphragm & Crossframe Connection Plates shall be 1/2" thick

TABLE OF DEFLECTIONS ~ INTERIOR GIRDERS (Inches)

		Piece No. 1												Piece No. 2										Piece No. 3										
	℄ P1(2)	11.42'	22.83'	34.25'	45.67'	57.08'	68.5'	79.91'	91.33'	102.75'	114.16'	125.58'	FS1	11.0'	22.0'	33.0'	44.0'	℄ P2	66.4'	77.8'	89.2'	100.6'	FS2	11.46'	22.92'	34.38'	45.84'	57.30'	68.76'	80.22'	91.68'	103.14'	114.60'	FS3
Steel Dead Load	0.00	0.29	0.56	0.80	0.99	1.13	1.22	1.24	1.20	1.11	0.98	0.81	0.62	0.44	0.27	0.13	0.04	0.00	0.03	0.11	0.23	0.40	0.58	0.76	0.93	1.06	1.16	1.21	1.22	1.17	1.07	0.94	0.77	0.59
Fluid Dead Load	0.00	0.99	1.93	2.74	3.40	3.88	4.16	4.23	4.09	3.78	3.31	2.72	2.08	1.45	0.88	0.42	0.12	0.00	0.10	0.40	0.85	1.44	2.08	2.73	3.33	3.82	4.17	4.35	4.35	4.18	3.83	3.34	2.75	2.10
Superimposed Dead Load	0.00	0.28	0.53	0.76	0.94	1.07	1.14	1.17	1.14	1.05	0.92	0.76	0.59	0.41	0.25	0.12	0.03	0.00	0.03	0.13	0.28	0.44	0.63	0.82	0.98	1.13	1.22	1.27	1.27	1.22	1.13	0.98	0.82	0.63

TABLE OF DEFLECTIONS ~ INTERIOR GIRDERS (Inches)

		Piece No. 4											Piece No. 5										Piece No. 6									
	FS3	11.4'	22.8'	34.2'	45.6'	℄ P3	68.4'	79.8'	91.2'	102.6'	FS4	11.46'	22.92'	34.38'	45.84'	57.30'	68.76'	80.22'	91.68'	103.14'	114.60'	FS5	11.4'	22.8'	34.2'	45.6'	℄ P4	68.4'	79.8'	91.2'	102.6'	FS6
Steel Dead Load	0.59	0.41	0.25	0.12	0.03	0.00	0.04	0.13	0.26	0.43	0.62	0.80	0.97	1.11	1.21	1.26	1.26	1.21	1.11	0.97	0.80	0.61	0.43	0.26	0.12	0.03	0.00	0.03	0.12	0.26	0.43	0.61
Fluid Dead Load	2.10	1.46	0.87	0.42	0.11	0.00	0.12	0.43	0.90	1.49	2.14	2.79	3.40	3.89	4.24	4.42	4.42	4.23	3.88	3.39	2.79	2.13	1.48	0.89	0.42	0.12	0.00	0.12	0.42	0.89	1.48	2.13
Superimposed Dead Load	0.63	0.44	0.27	0.13	0.03	0.00	0.03	0.13	0.27	0.44	0.63	0.82	0.98	1.13	1.22	1.27	1.27	1.22	1.13	0.98	0.82	0.63	0.44	0.27	0.13	0.03	0.00	0.03	0.13	0.27	0.44	0.63

TABLE OF DEFLECTIONS ~ INTERIOR GIRDERS (Inches)

		Piece No. 7											Piece No. 8										Piece No. 9									
	FS6	11.46'	22.92'	34.38'	45.84'	57.30'	68.76'	80.22'	91.68'	103.14'	114.60'	FS7	11.4'	22.8'	34.2'	45.6'	℄ P5	68.4'	79.8'	91.2'	102.6'	FS8	11.46'	22.92'	34.38'	45.84'	57.30'	68.76'	80.22'	91.68'	103.14'	114.60'	FS9
Steel Dead Load	0.61	0.80	0.97	1.11	1.21	1.26	1.26	1.21	1.11	0.97	0.80	0.62	0.43	0.26	0.13	0.04	0.00	0.03	0.12	0.25	0.41	0.59	0.77	0.94	1.07	1.17	1.22	1.21	1.16	1.06	0.93	0.76	0.58
Fluid Dead Load	2.13	2.79	3.39	3.88	4.23	4.42	4.42	4.24	3.89	3.39	2.79	2.14	1.49	0.90	0.43	0.12	0.00	0.11	0.42	0.87	1.46	2.10	2.75	3.35	3.83	4.18	4.35	4.35	4.17	3.82	3.32	2.73	2.08
Superimposed Dead Load	0.63	0.82	0.98	1.13	1.22	1.27	1.27	1.22	1.13	0.98	0.82	0.63	0.44	0.27	0.13	0.03	0.00	0.03	0.13	0.27	0.44	0.63	0.82	0.98	1.13	1.22	1.27	1.27	1.22	1.13	0.98	0.82	0.63

TABLE OF DEFLECTIONS ~ INTERIOR GIRDERS (Inches)

		Piece No. 10										Piece No. 11											
	FS9	11.4'	22.8'	34.2'	45.6'	℄ P6	68.0'	79.0'	90.0'	101.0'	FS10	11.42'	22.83'	34.25'	45.67'	57.08'	68.5'	79.91'	91.33'	102.75'	114.16'	125.58'	℄ A2
Steel Dead Load	0.58	0.40	0.23	0.11	0.03	0.00	0.04	0.13	0.27	0.44	0.62	0.81	0.98	1.11	1.20	1.24	1.22	1.13	0.99	0.80	0.56	0.29	0.00
Fluid Dead Load	2.08	1.44	0.85	0.40	0.10	0.00	0.12	0.42	0.88	1.45	2.08	2.72	3.31	3.78	4.09	4.23	4.16	3.88	3.40	2.74	1.93	0.99	0.00
Superimposed Dead Load	0.63	0.44	0.28	0.13	0.03	0.00	0.03	0.12	0.25	0.41	0.59	0.76	0.92	1.05	1.14	1.17	1.14	1.07	0.94	0.76	0.53	0.28	0.00

STATE OF MAINE
DEPARTMENT OF TRANSPORTATION

AC-BH-1267(400)

WIN 12674.00

BRIDGE NO. 2506

BRIDGE PLANS

PROJ. MANAGER	N. Benoit			
DESIGN-DETAILED	D. Eaton	D. Damren	June 2012	SIGNATURE
CHECKED-REVIEWED	E. Caswell	B. Nichols	6/12 3/13	
DESIGN2-DETAILED2				P.E. NUMBER
DESIGN3-DETAILED3				
REVISIONS 1				DATE
REVISIONS 2				
REVISIONS 3				
REVISIONS 4				
FIELD CHANGES				

MAINE KENNEBEC BRIDGE
KENNEBEC RIVER
RICHMOND, SAGADAHOC CTY. DRESDEN, LINCOLN CTY.

GIRDER ELEV. & DEFLECTIONS

SHEET NUMBER
153
OF 238

Filename: ...\MSTA\153_Girder Elevation.dgn Division: BRIDGE Username: dana.damren Date:3/27/2013

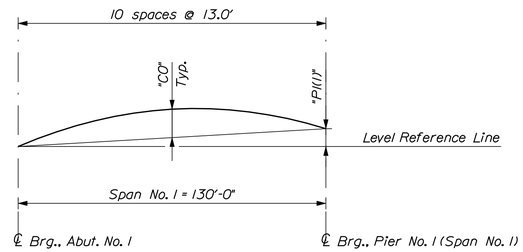

CAMBER DIAGRAM ~ SPAN NO. 1

TABLE OF CAMBER DIMENSIONS (Feet)	
Girder	"PI (1)"
G1	7.485
G2	7.680
G3	7.885
G4	8.070

TABLE OF CAMBER ORDINATES "CO" (Inches)

		Span No. 1										
Girder	℄ A1	13.0'	26.0'	39.0'	52.0'	65'	78.0'	91.0'	104.0'	117.0'	℄ P1 (1)	Girder
G1	0	1 3/4	3 1/4	4 9/16	5 7/16	6	6	5 1/2	4 1/2	2 3/8	0	G1
G2	0	1 5/8	3 1/8	4 7/16	5 1/4	5 11/16	5 9/16	4 13/16	3 3/4	2	0	G2
G3	0	1 9/16	2 15/16	4	4 3/4	5 1/16	4 11/16	3 15/16	2 13/16	1 1/2	0	G3
G4	0	1	1 15/16	2 13/16	3 3/16	3 1/4	2 15/16	2 1/4	1 1/16	11/16	0	G4

STATE OF MAINE
DEPARTMENT OF TRANSPORTATION

AC-BH-1267(400)

WIN 12674.00

BRIDGE NO. 2506

BRIDGE PLANS

PROJ. MANAGER	N. Benoit	BY	DATE
DESIGN-DETAILED	B. Reeves	D. Damren	Aug. 2012
CHECKED-REVIEWED	E. Caswell	B. Nichols	8/12/13
DESIGN2-DETAILED2	------	------	------
DESIGN3-DETAILED3	------	------	------
REVISIONS 1	------	------	------
REVISIONS 2	------	------	------
REVISIONS 3	------	------	------
REVISIONS 4	------	------	------
FIELD CHANGES	------	------	------

SIGNATURE

P.E. NUMBER

DATE

MAINE KENNEBEC BRIDGE
KENNEBEC RIVER
RICHMOND, SAGADAHOC CTY. DRESDEN, LINCOLN CTY.

CAMBER DIAGRAM ~ SPAN NO. 1

SHEET NUMBER
154
OF 238

Filename: ...\MSTA\154_Camber_Span No. 1.dgn Division: BRIDGE Username: dana.damren Date:3/27/2013

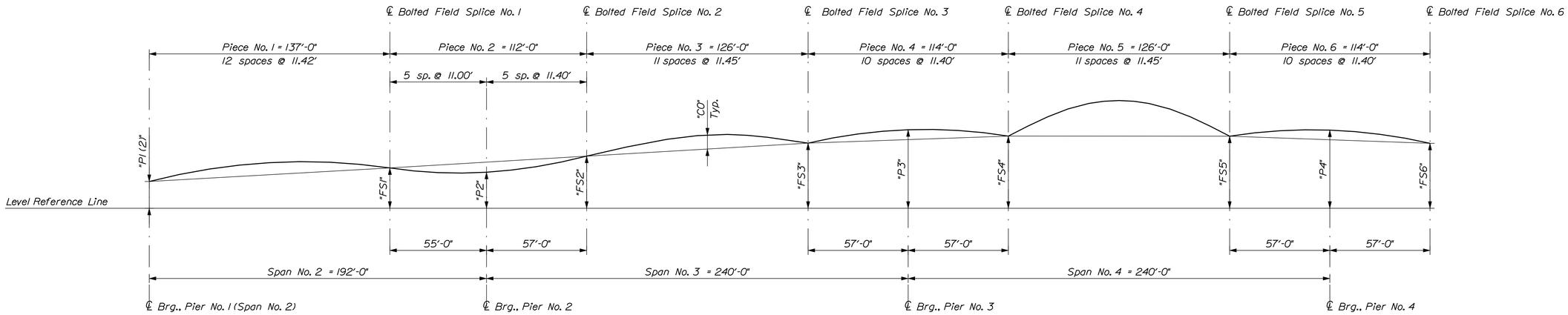

PART CAMBER DIAGRAM ~ SPAN NO. 2 thru 4

TABLE OF CAMBER DIMENSIONS (Feet)

Girder	"P1 (2)"	"FS1"	"P2"	"FS2"	"FS3"	"P3"	"FS4"	"FS5"	"P4"	"FS6"	Girder
G1	15.28	23.02	26.08	29.74	37.17	39.39	41.14	41.10	39.30	37.05	G1
G2	14.70	22.95	25.98	29.67	37.12	39.31	41.11	41.09	39.28	37.07	G2
G3	14.31	22.83	25.86	29.55	37.01	39.22	41.03	41.05	39.25	37.06	G3
G4	14.10	22.70	25.76	29.42	36.88	39.14	40.94	40.98	39.23	37.02	G4

TABLE OF CAMBER ORDINATES "CO" (Inches)

		Piece No. 1												Piece No. 2										Piece No. 3											
Girder	℄ P1 (2)	11.42'	22.83'	34.25'	45.67'	57.08'	68.50'	79.91'	91.33'	102.75'	114.16'	125.58'	FS1	11.0'	22.0'	33.0'	44.0'	℄ P2	66.4'	77.8'	89.2'	100.6'	FS2	11.46'	22.92'	34.38'	45.84'	57.30'	68.76'	80.22'	91.68'	103.14'	114.60'	FS3	Girder
G1	0	0 13/16	1 11/16	2 7/16	3 1/16	3 5/16	3 7/16	3 1/8	2 11/16	1 7/8	1	0 5/16	0	-0 7/8	-1 11/16	-2 5/16	-2 11/16	-2 7/8	-2 13/16	-2 5/16	-1 11/16	-0 5/16	0	0 5/16	1 5/16	2 3/4	3 7/16	3 11/16	3 7/8	3 13/16	3 9/16	2 15/16	1 11/16	0	G1
G2	0	1 1/8	2 5/16	3 1/4	4 1/16	4 7/16	4 5/8	4 3/8	3 15/16	3 1/16	2 1/8	1	0	-1	-1 7/8	-2 5/8	-3 1/8	-3 5/16	-3 3/16	-2 3/4	-1 15/16	-1 1/16	0	1 1/16	2 1/8	3 1/16	3 11/16	4 1/8	4 1/4	4 3/16	3 11/16	3 1/16	1 13/16	0	G2
G3	0	1 1/2	2 13/16	3 13/16	4 1/2	5	5 1/16	4 15/16	4 3/8	3 5/8	2 11/16	1 3/8	0	-1	-1 7/8	-2 5/8	-3 1/8	-3 5/16	-3 1/16	-2 5/8	-1 13/16	-0 15/16	0	1 3/16	2 1/4	3 3/16	3 3/4	4 3/16	4 5/16	4 3/16	3 11/16	3 1/16	1 13/16	0	G3
G4	0	1 15/16	3 1/2	4 9/16	4 3/4	5 1/8	5 1/16	4 7/8	4 1/4	3 1/2	2 7/16	1 5/16	0	-0 7/8	-1 11/16	-2 5/16	-2 11/16	-2 7/8	-2 11/16	-2 5/16	-1 11/16	-0 13/16	0	1	2	2 11/16	3 5/16	3 11/16	3 13/16	3 9/16	3 1/4	2 3/4	1 9/16	0	G4

TABLE OF CAMBER ORDINATES "CO" (Inches)

		Piece No. 4												Piece No. 5												Piece No. 6									
Girder	FS3	11.4'	22.8'	34.2'	45.6'	℄ P3	68.4'	79.8'	91.2'	102.6'	FS4	11.46'	22.92'	34.38'	45.84'	57.30'	68.76'	80.22'	91.68'	103.14'	114.60'	FS5	11.4'	22.8'	34.2'	45.6'	℄ P4	68.4'	79.8'	91.2'	102.6'	FS6	Girder
G1	0	1 3/16	2	2 1/2	2 11/16	2 13/16	2 11/16	2 7/16	1 15/16	1 3/16	0	3 1/4	5 7/8	7 15/16	9 5/16	10 1/16	10	9 5/16	7 7/8	5 13/16	3 1/8	0	1 1/16	1 7/8	2 3/8	2 5/8	2 3/4	2 5/8	2 3/8	1 7/8	1 1/16	0	G1
G2	0	1 1/16	1 11/16	2 1/16	2 1/4	2 3/8	2 5/16	2 1/16	1 5/8	1	0	3 5/16	6 1/16	8 3/16	9 3/4	10 1/2	10 7/16	9 11/16	8 5/16	6 1/8	3 5/16	0	1 1/16	1 11/16	2 3/16	2 5/16	2 3/8	2 3/8	2 1/8	1 3/4	1 1/8	0	G2
G3	0	1 1/8	1 3/4	2 3/16	2 3/8	2 3/8	2 5/16	2 3/16	1 11/16	1 1/16	0	3 1/4	6 1/8	8 5/16	9 11/16	10 7/16	10 1/2	9 3/4	8 3/16	6 1/16	3 5/16	0	1	1 5/8	2 1/16	2 5/16	2 5/16	2 1/4	2	1 11/16	1 1/16	0	G3
G4	0	1 1/8	1 15/16	2 3/8	2 5/8	2 3/4	2 5/8	2 3/8	1 15/16	1 1/16	0	3 1/8	5 13/16	7 7/8	9 5/16	10	10 1/16	9 1/4	7 15/16	5 7/8	3 1/4	0	1 1/4	1 15/16	2 7/16	2 11/16	2 13/16	2 11/16	2 1/2	2	1 3/16	0	G4

STATE OF MAINE
DEPARTMENT OF TRANSPORTATION

AC-BH-1267(400)

WIN 12674.00

BRIDGE NO. 2506

BRIDGE PLANS

PROJ. MANAGER	N. Benoit	BY	DATE
DESIGN-DETAILED	D. Eaton	D. Damren	July 2012
CHECKED-REVIEWED	E. Caswell	B. Nichols	7/12 3/13
DESIGN2-DETAILED2	------	------	------
DESIGN3-DETAILED3	------	------	------
REVISIONS 1	------	------	------
REVISIONS 2	------	------	------
REVISIONS 3	------	------	------
REVISIONS 4	------	------	------
FIELD CHANGES	------	------	------

SIGNATURE

P.E. NUMBER

DATE

MAINE KENNEBEC BRIDGE
KENNEBEC RIVER
RICHMOND, SAGADAHOC CTY. DRESDEN, LINCOLN CTY.

PART CAMBER DIAGRAM

SHEET NUMBER
155
OF 238

Filename: ...\155_Camber_Span No. 2 - 5.dgn Division: BRIDGE Username: dana.damren Date:3/27/2013

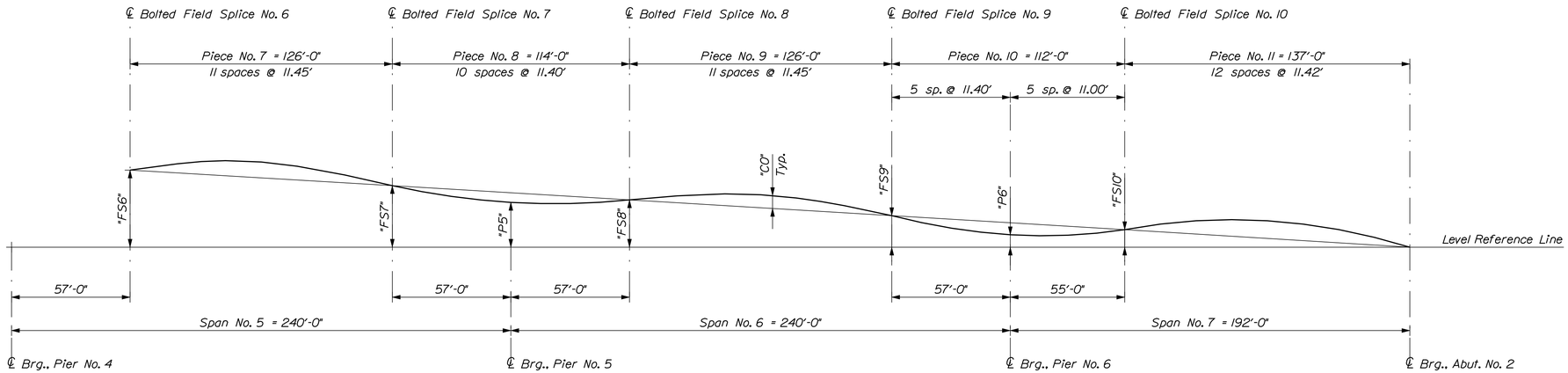

PART CAMBER DIAGRAM ~ SPAN NO. 5 thru 7

TABLE OF CAMBER DIMENSIONS (Feet)

Girder	"FS6"	"FS7"	"P5"	"FS8"	"FS9"	"P6"	"FS10"	"A2"	Girder
G1	37.05	29.59	25.92	22.74	15.18	11.52	8.46	0.00	G1
G2	37.07	29.62	25.92	22.78	15.21	11.52	8.49	0.00	G2
G3	37.06	29.62	25.92	22.78	15.21	11.52	8.49	0.00	G3
G4	37.02	29.59	25.92	22.74	15.18	11.52	8.46	0.00	G4

TABLE OF CAMBER ORDINATES "CO" (Inches)

		Piece No. 7											Piece No. 8										Piece No. 9											
Girder	FS6	11.46'	22.92'	34.38'	45.84'	57.30'	68.76'	80.22'	91.68'	103.14'	114.60'	FS7	11.4'	22.8'	34.2'	45.6'	℄ P5	68.4'	79.8'	91.2'	102.6'	FS8	11.46'	22.92'	34.38'	45.84'	57.30'	68.76'	80.22'	91.68'	103.14'	114.60'	FS9	Girder
G1	0	1 5/8	2 3/4	3 5/16	3 5/8	3 13/16	3 11/16	3 5/16	2 11/16	2	1 1/16	0	-0 7/8	-1 11/16	-2 5/16	-2 11/16	-2 15/16	-2 3/4	-2 3/8	-1 11/16	-0 13/16	0	1	1 3/4	2 3/8	2 13/16	3 3/16	3 1/8	2 7/8	2 5/16	1 3/4	0 15/16	0	G1
G2	0	1 7/8	3 1/8	3 3/4	4 1/4	4 3/8	4 3/16	3 3/4	3 3/16	2 1/4	1 3/16	0	-1	-1 7/8	-2 5/8	-3 1/8	-3 3/8	-3 1/8	-2 9/16	-1 15/16	-0 15/16	0	1 1/8	2	2 3/4	3 3/8	3 5/8	3 9/16	3 1/4	2 13/16	2	1 1/16	0	G2
G3	0	1 13/16	3 1/16	3 11/16	4 3/16	4 5/16	4 1/8	3 11/16	3 1/8	2 3/16	1 1/16	0	-1 1/8	-2	-2 3/4	-3 1/4	-3 3/8	-3 1/4	-2 11/16	-2 1/16	-1 1/16	0	1	1 7/8	2 5/8	3 1/4	3 1/2	3 7/16	3 1/8	2 11/16	1 7/8	0 15/16	0	G3
G4	0	1 11/16	2 15/16	3 9/16	3 7/8	3 15/16	3 3/4	3 7/16	2 13/16	1 15/16	0 15/16	0	-0 15/16	-1 11/16	-2 5/16	-2 13/16	-2 15/16	-2 7/8	-2 3/8	-1 11/16	-0 15/16	0	0 7/8	1 5/8	2 3/8	2 13/16	3 1/16	3	2 7/8	2 5/16	1 5/8	0 13/16	0	G4

TABLE OF CAMBER ORDINATES "CO" (Inches)

		Piece No. 10											Piece No. 11											
Girder	FS9	11.4'	22.8'	34.2'	45.6'	℄ P6	68.0'	79.0'	90.0'	101.0'	FS10	11.42'	22.83'	34.25'	45.67'	57.08'	68.50'	79.91'	91.33'	102.75'	114.16'	125.58'	℄ A2	Girder
G1	0	-0 13/16	-1 11/16	-2 5/16	-2 11/16	-2 7/8	-2 11/16	-2 5/16	-1 11/16	-0 7/8	0	1 3/16	2 1/8	3 1/16	3 11/16	4 3/16	4 1/4	4 3/16	3 11/16	3 1/8	2 1/8	1 3/16	0	G1
G2	0	-0 15/16	-1 13/16	-2 5/8	-3 1/16	-3 5/16	-3 1/8	-2 5/8	-1 7/8	-1	0	1 5/16	2 7/16	3 9/16	4 1/4	4 3/4	4 7/8	4 3/4	4 1/4	3 9/16	2 1/2	1 3/8	0	G2
G3	0	-1 1/16	-1 15/16	-2 3/4	-3 3/16	-3 5/16	-3 1/8	-2 5/8	-1 7/8	-1	0	1 3/16	2 7/16	3 7/16	4 1/4	4 11/16	4 7/8	4 5/8	4 1/4	3 7/16	2 1/2	1 1/4	0	G3
G4	0	-0 15/16	-1 11/16	-2 5/16	-2 13/16	-2 7/8	-2 11/16	-2 5/16	-1 11/16	-0 7/8	0	1 1/16	2 1/8	3	3 11/16	4 1/16	4 1/4	4 1/16	3 11/16	3	2 1/8	1 1/16	0	G4

STATE OF MAINE
DEPARTMENT OF TRANSPORTATION

AC-BH-1267(400)

WIN 12674.00

BRIDGE NO. 2506

BRIDGE PLANS

PROJ. MANAGER	N. Benoit	BY	DATE
DESIGN-DETAILED	D. Eaton	D. Damren	July 2012
CHECKED-REVIEWED	E. Caswell	B. Nichols	7/12 3/13
DESIGN2-DETAILED2	------	------	------
DESIGN3-DETAILED3	------	------	------
REVISIONS 1	------	------	------
REVISIONS 2	------	------	------
REVISIONS 3	------	------	------
REVISIONS 4	------	------	------
FIELD CHANGES	------	------	------

SIGNATURE

P.E. NUMBER

DATE

MAINE KENNEBEC BRIDGE
KENNEBEC RIVER
RICHMOND, SAGADAHOC CTY. DRESDEN, LINCOLN CTY.

PART CAMBER DIAGRAM

SHEET NUMBER

156

OF 238

Filename: ...\156_Camber_Span No. 5 - 7.dgn Division: BRIDGE Username: dana.damren Date:3/27/2013

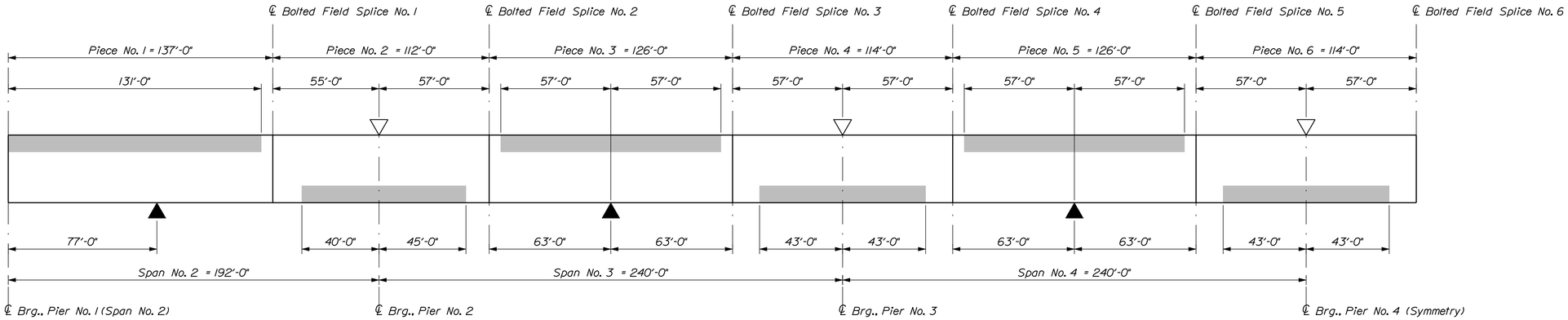

GIRDER STRESS DIAGRAM ~ SPAN NO. 2 thru 7

▽ Maximum Negative Moment ▲ Maximum Positive Moment

Shaded areas are always in compression.
Other areas are in tension or have stress reversal.

BOTTOM OF SLAB ELEVATIONS

Span No. 1

Girder	℄ A1	13'	26'	39'	52'	65'	78'	91'	104'	117'	P1 (1)	Girder
G1	53.07	53.93	54.78	55.62	56.43	57.22	57.98	58.69	59.38	59.97	60.55	G1
G2	52.52	53.40	54.26	55.12	55.94	56.74	57.51	58.23	58.93	59.57	60.20	G2
G3	51.95	52.85	53.72	54.58	55.42	56.23	56.99	57.73	58.44	59.15	59.84	G3
G4	51.39	52.26	53.12	53.98	54.80	55.61	56.40	57.16	57.89	58.68	59.46	G4

Span No. 2

Girder	℄ P1 (2)	10'	20'	30'	40'	50'	60'	70'	80'	90'	100'	110'	120'	130'	140'	150'	160'	170'	180'	℄ P2	Girder
G1	60.72	61.33	61.94	62.54	63.14	63.73	64.31	64.86	65.41	65.94	66.46	66.97	67.48	68.03	68.58	69.13	69.68	70.24	70.82	71.52	G1
G2	60.39	61.06	61.73	62.39	63.03	63.67	64.29	64.89	65.48	66.05	66.60	67.14	67.67	68.22	68.75	69.29	69.84	70.40	70.97	71.67	G2
G3	60.06	60.77	61.47	62.15	62.82	63.47	64.11	64.74	65.34	65.93	66.50	67.06	67.61	68.16	68.69	69.23	69.78	70.34	70.91	71.61	G3
G4	59.71	60.45	61.20	61.87	62.52	63.17	63.80	64.42	65.03	65.62	66.20	66.76	67.32	67.87	68.42	68.97	69.52	70.08	70.66	71.36	G4

Span No. 3

Girder	℄ P2	12'	24'	36'	48'	60'	72'	84'	96'	108'	120'	132'	144'	156'	168'	180'	192'	204'	216'	228'	℄ P3	Girder
G1	71.52	72.26	73.01	73.77	74.55	75.33	76.11	76.89	77.65	78.40	79.13	79.84	80.53	81.21	81.85	82.43	82.97	83.48	83.96	84.41	84.83	G1
G2	71.67	72.40	73.16	73.93	74.72	75.51	76.31	77.09	77.86	78.61	79.34	80.05	80.74	81.41	82.04	82.62	83.15	83.65	84.12	84.57	85.00	G2
G3	71.61	72.34	73.10	73.87	74.66	75.45	76.25	77.03	77.80	78.55	79.28	79.99	80.68	81.35	81.99	82.58	83.11	83.61	84.09	84.53	84.97	G3
G4	71.36	72.10	72.85	73.61	74.39	75.17	75.95	76.73	77.49	78.24	78.97	79.68	80.37	81.05	81.70	82.29	82.85	83.36	83.85	84.31	84.74	G4

Span No.4

Girder	℄ P3	12'	24'	36'	48'	60'	72'	84'	96'	108'	120'	132'	144'	156'	168'	180'	192'	204'	216'	228'	℄ P4	Girder
G1	84.83	85.24	85.63	85.99	86.31	86.61	86.85	87.04	87.18	87.27	87.30	87.26	87.17	87.02	86.81	86.56	86.25	85.92	85.55	85.16	84.74	G1
G2	85.00	85.41	85.80	86.18	86.52	86.82	87.08	87.29	87.45	87.54	87.57	87.54	87.44	87.29	87.07	86.81	86.50	86.16	85.78	85.38	84.97	G2
G3	84.97	85.38	85.78	86.16	86.50	86.81	87.07	87.29	87.44	87.54	87.57	87.54	87.45	87.29	87.08	86.82	86.52	86.18	85.80	85.41	85.00	G3
G4	84.74	85.16	85.55	85.93	86.25	86.56	86.81	87.02	87.17	87.26	87.30	87.27	87.18	87.04	86.85	86.61	86.31	85.98	85.63	85.24	84.83	G4

Span No. 5

Girder	℄ P4	12'	24'	36'	48'	60'	72'	84'	96'	108'	120'	132'	144'	156'	168'	180'	192'	204'	216'	228'	℄ P5	Girder
G1	84.74	84.31	83.85	83.36	82.85	82.30	81.70	81.05	80.37	79.68	78.97	78.24	77.49	76.73	75.96	75.18	74.39	73.62	72.85	72.10	71.36	G1
G2	84.97	84.53	84.09	83.62	83.12	82.58	81.99	81.36	80.69	80.00	79.29	78.56	77.81	77.04	76.25	75.46	74.67	73.88	73.10	72.34	71.61	G2
G3	85.00	84.57	84.12	83.66	83.16	82.62	82.04	81.42	80.75	80.06	79.35	78.62	77.87	77.10	76.31	75.52	74.73	73.94	73.16	72.40	71.67	G3
G4	84.83	84.41	83.96	83.48	82.97	82.44	81.85	81.21	80.53	79.84	79.13	78.40	77.65	76.89	76.12	75.34	74.55	73.78	73.01	72.26	71.52	G4

Span No. 6

Girder	℄ P5	12'	24'	36'	48'	60'	72'	84'	96'	108'	120'	132'	144'	156'	168'	180'	192'	204'	216'	228'	℄ P6	Girder
G1	71.36	70.66	69.97	69.29	68.63	67.97	67.32	66.65	65.97	65.28	64.57	63.84	63.09	62.33	61.55	60.77	59.99	59.21	58.45	57.70	56.96	G1
G2	71.61	70.90	70.22	69.55	68.90	68.26	67.61	66.95	66.28	65.59	64.88	64.15	63.40	62.63	61.85	61.05	60.26	59.47	58.70	57.94	57.21	G2
G3	71.67	70.96	70.28	69.61	68.96	68.32	67.67	67.01	66.34	65.65	64.94	64.21	63.46	62.69	61.91	61.11	60.32	59.53	58.76	58.00	57.27	G3
G4	71.52	70.82	70.13	69.45	68.79	68.13	67.48	66.81	66.13	65.44	64.73	64.00	63.25	62.49	61.71	60.93	60.15	59.37	58.61	57.86	57.12	G4

Span No. 7

Girder	℄ P6	10'	20'	30'	40'	50'	60'	70'	80'	90'	100'	110'	120'	130'	140'	150'	160'	170'	180'	℄ A2	Girder
G1	56.96	56.26	55.68	55.12	54.57	54.02	53.47	52.92	52.36	51.80	51.22	50.63	50.02	49.40	48.77	48.14	47.47	46.80	46.12	45.44	G1
G2	57.21	56.51	55.94	55.38	54.83	54.29	53.76	53.21	52.66	52.10	51.53	50.94	50.34	49.71	49.07	48.44	47.75	47.07	46.38	45.69	G2
G3	57.27	56.57	56.00	55.44	54.89	54.35	53.82	53.27	52.72	52.16	51.59	51.00	50.40	49.77	49.13	48.50	47.81	47.13	46.44	45.75	G3
G4	57.12	56.42	55.84	55.28	54.73	54.18	53.63	53.08	52.52	51.96	51.38	50.79	50.18	49.56	48.93	48.30	47.63	46.96	46.28	45.60	G4

STATE OF MAINE
DEPARTMENT OF TRANSPORTATION

AC-BH-1267(400)

WIN 12674.00

BRIDGE NO. 2506

BRIDGE PLANS

		BY	DATE
PROJ. MANAGER	N. Benoit		
DESIGN-DETAILED	D. Edton	D. Damren	July 2012
CHECKED-REVIEWED	E. Caswell	B. Nichols	7/12 3/13
DESIGN2-DETAILED2	------	------	
DESIGN3-DETAILED3	------	------	
REVISIONS 1	------	------	
REVISIONS 2	------	------	
REVISIONS 3	------	------	
REVISIONS 4	------	------	
FIELD CHANGES	------	------	

SIGNATURE

P.E. NUMBER

DATE

MAINE KENNEBEC BRIDGE
KENNEBEC RIVER
RICHMOND, SAGADAHOC CTY. DRESDEN, LINCOLN CTY.

GIRDER STRESS & BOS ELEV'S

SHEET NUMBER
157
OF 238

Filename: ...\157_Girder Stress & BOS Elevations.dgn Division: BRIDGE Username: dana.damren Date:3/27/2013

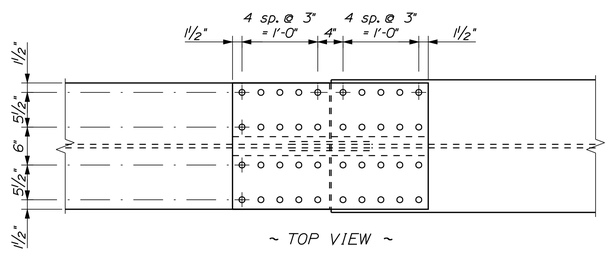

~ TOP VIEW ~

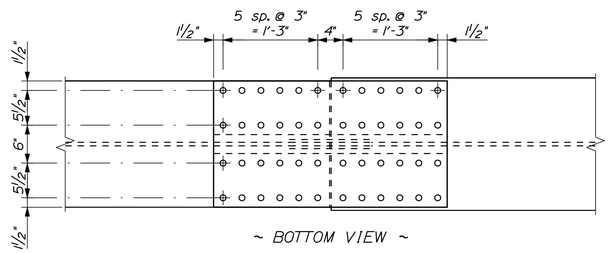

~ BOTTOM VIEW ~

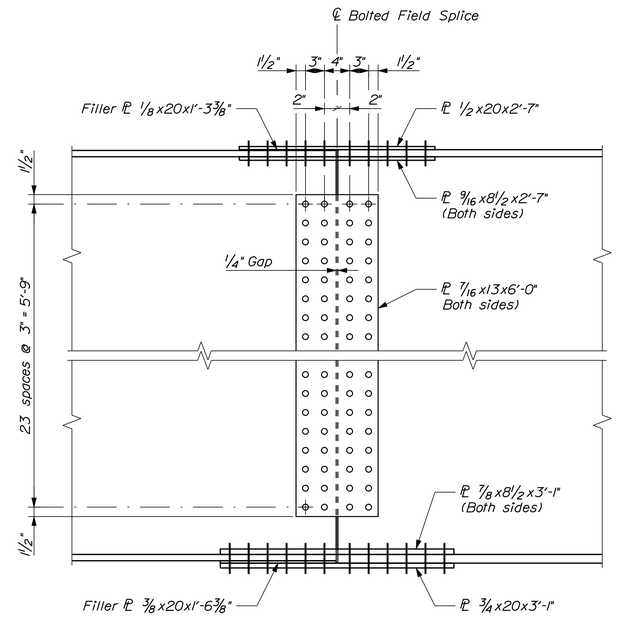

~ ELEVATION ~

BOLTED FIELD SPLICE NO. 1 & 10

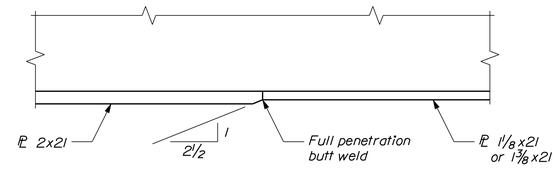

FLANGE TRANSITION DETAIL

Typical Top & Bottom Flange

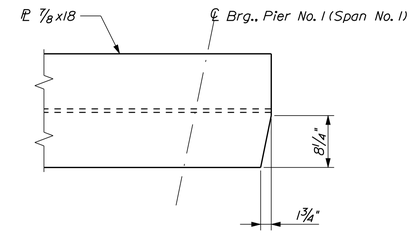

TOP FLANGE CLIP ~ SPAN NO. 1

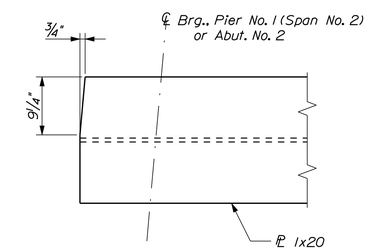

TOP FLANGE CLIP ~ SPAN NO. 2 & 7

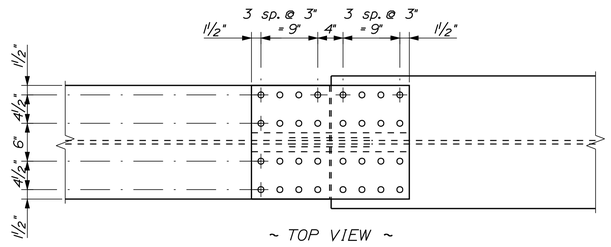

~ TOP VIEW ~

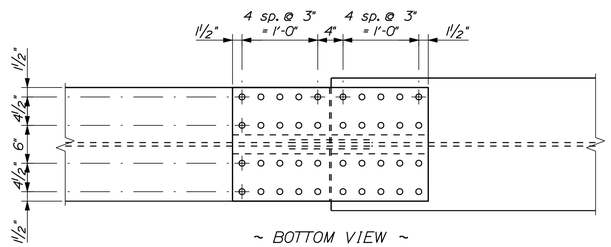

~ BOTTOM VIEW ~

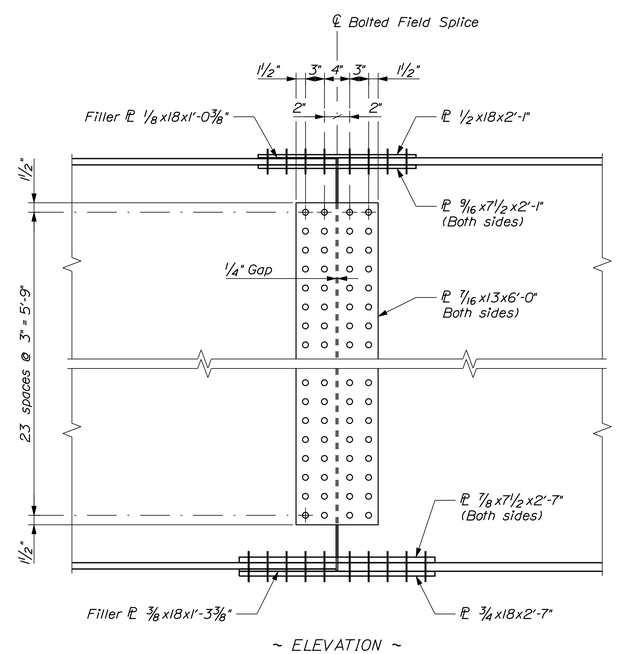

~ ELEVATION ~

BOLTED FIELD SPLICE NO. 2 THRU 9

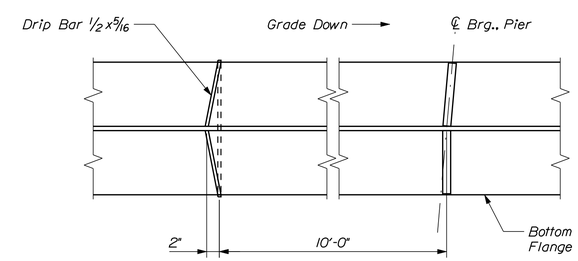

DRIP BAR PLAN

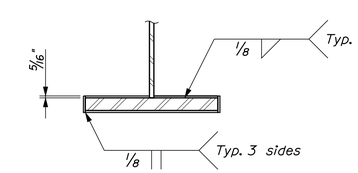

DRIP BAR SECTION

STATE OF MAINE
DEPARTMENT OF TRANSPORTATION

AC-BH-1267(400)

WIN 12674.00

BRIDGE NO. 2506

BRIDGE PLANS

PROJ. MANAGER	N. Benoit	BY	DATE	
DESIGN-DETAILED	D. Eaton	D. Damren	Nov. 2012	
CHECKED-REVIEWED	E. Caswell	B. Nichols	11/12/13	SIGNATURE
DESIGN2-DETAILED2	------	------	------	
DESIGN3-DETAILED3	------	------	------	P.E. NUMBER
REVISIONS 1	------	------	------	
REVISIONS 2	------	------	------	DATE
REVISIONS 3	------	------	------	
REVISIONS 4	------	------	------	
FIELD CHANGES	------	------	------	

MAINE KENNEBEC BRIDGE
KENNEBEC RIVER
RICHMOND, SAGADAHOC CTY. DRESDEN, LINCOLN CTY.

STRUCTURAL STEEL DETAILS

SHEET NUMBER

158

OF 238

Filename: ...\158_Structural Steel Details.dgn Division: BRIDGE Username: dana.damren Date:3/27/2013

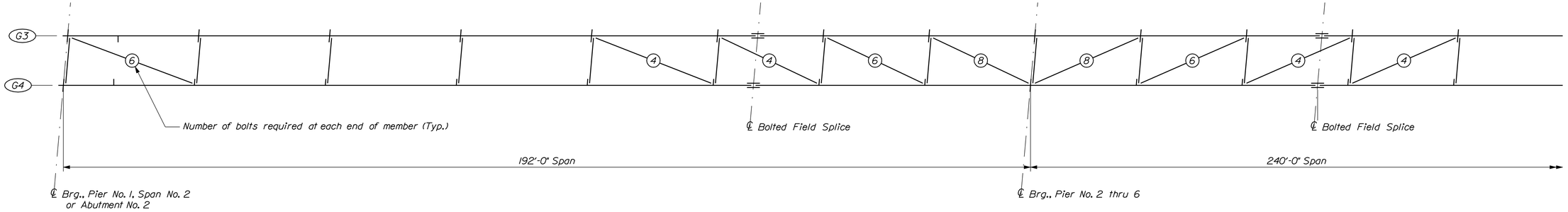

LATERAL BRACING BOLT PLAN ~ SPANS NO. 2 THRU 7

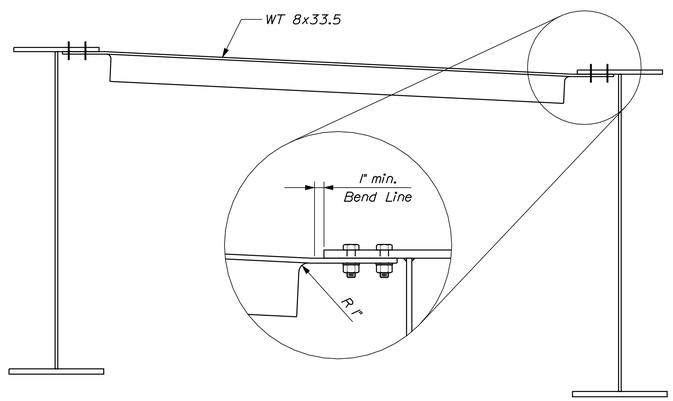

LATERAL BRACING SECTION ~ SPAN NO. 1

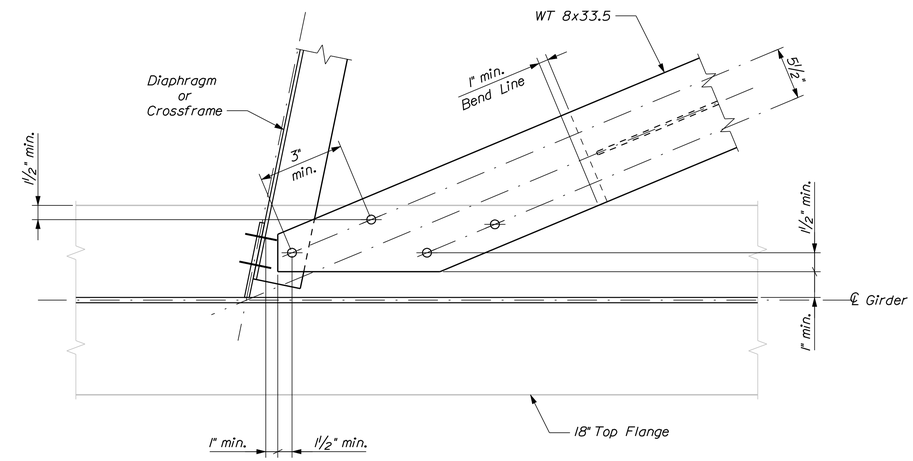

LATERAL BRACING PLAN ~ SPAN NO. 1

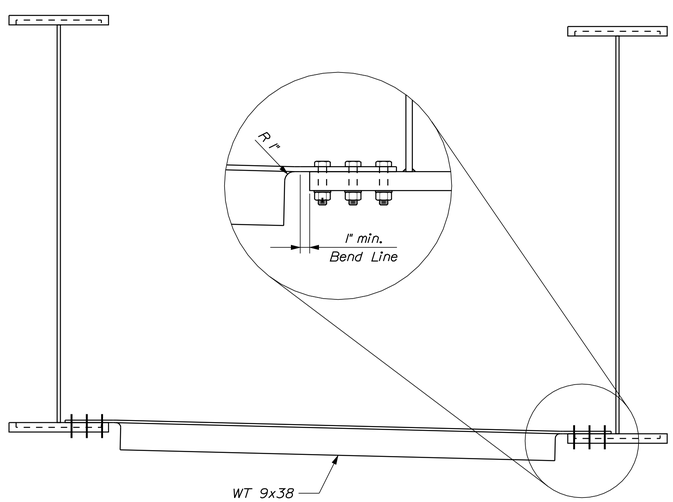

LATERAL BRACING SECTION ~ SPANS NO. 2 THRU 7

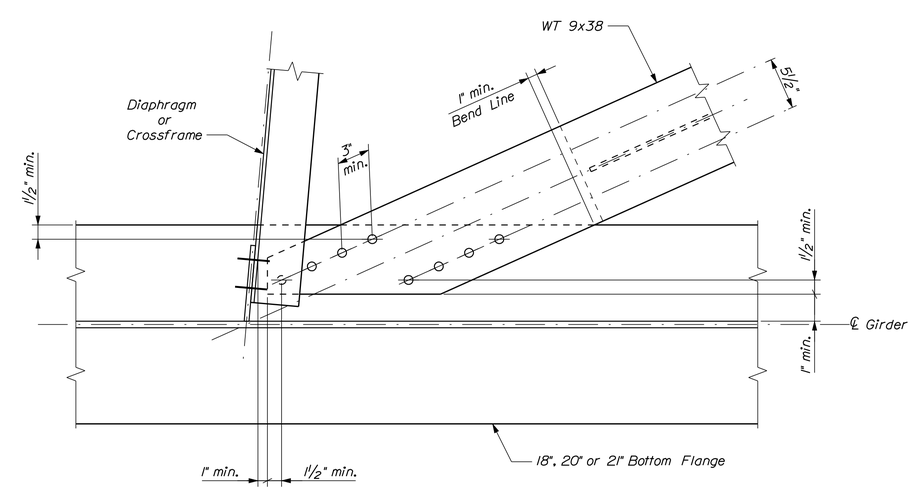

LATERAL BRACING PLAN ~ SPANS NO. 2 THRU 7

Connection varies 4 to 8 bolts ~ See "Lateral Bracing Bolt Plan"

STATE OF MAINE
DEPARTMENT OF TRANSPORTATION

AC-BH-1267(400)

WIN 12674.00

BRIDGE NO. 2506

BRIDGE PLANS

		BY	DATE
PROJ. MANAGER	N. Benoit		
DESIGN-DETAILED	D. Eaton	D. Damren	Jan. 2013
CHECKED-REVIEWED	E. Caswell	B. Nichols	1/13 3/13
DESIGN2-DETAILED2	------	------	------
DESIGN3-DETAILED3	------	------	------
REVISIONS 1	------	------	------
REVISIONS 2	------	------	------
REVISIONS 3	------	------	------
REVISIONS 4	------	------	------
FIELD CHANGES	------	------	------

SIGNATURE

P.E. NUMBER

DATE

MAINE KENNEBEC BRIDGE
KENNEBEC RIVER
RICHMOND, SAGADAHOC CTY. DRESDEN, LINCOLN CTY.

LATERAL BRACING

SHEET NUMBER

159

OF 238

Filename: ...\MSTA\159_LateralBracing.dgn Division: BRIDGE Username: dana.damren Date:3/27/2013

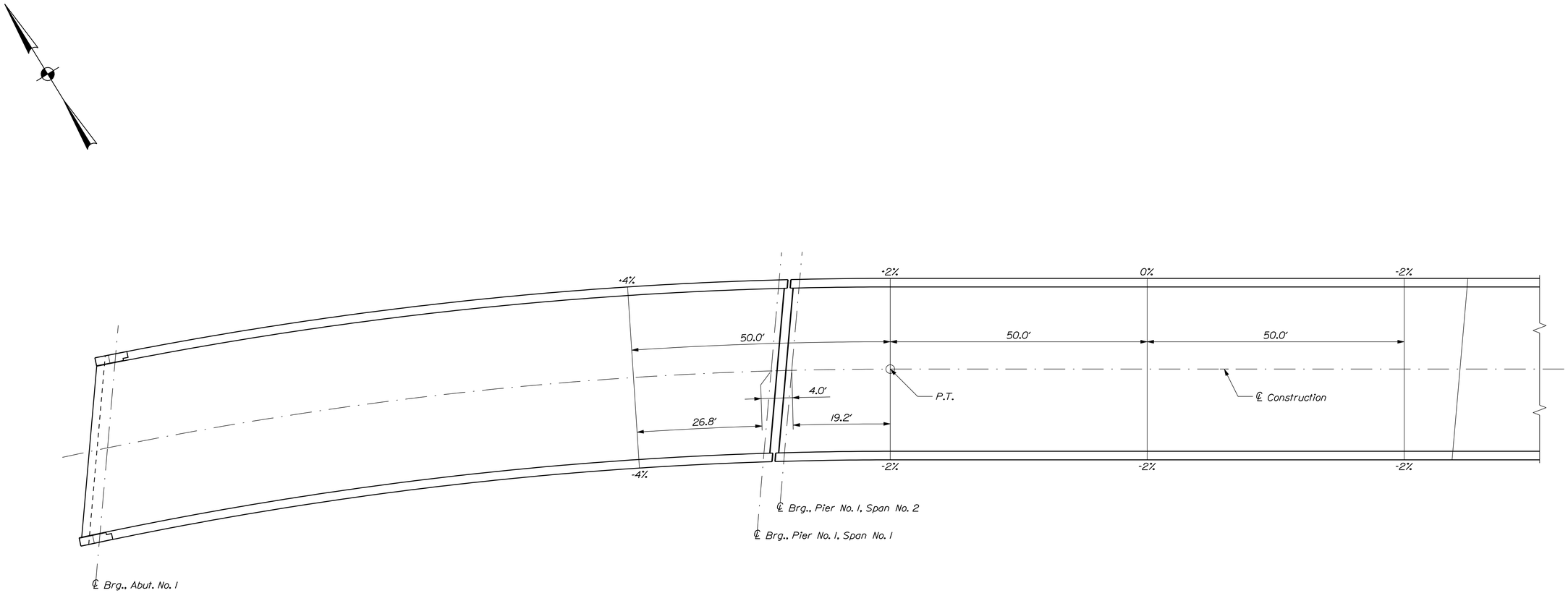

SUPERELEVATION TRANSITION

Dimensions are horizontal

STATE OF MAINE
DEPARTMENT OF TRANSPORTATION

AC-BH-1267(400)

WIN 12674.00

BRIDGE NO. 2506

BRIDGE PLANS

PROJ. MANAGER	N. Benoit	BY	DATE
DESIGN-DETAILED	D. Eaton	D. Damren	July 2012
CHECKED-REVIEWED	E. Caswell	B. Nichols	7/12 3/13
DESIGN2-DETAILED2	------	------	SIGNATURE
DESIGN3-DETAILED3	------	------	P.E. NUMBER
REVISIONS 1	------	------	
REVISIONS 2	------	------	DATE
REVISIONS 3	------	------	
REVISIONS 4	------	------	
FIELD CHANGES	------	------	

MAINE KENNEBEC BRIDGE
KENNEBEC RIVER
RICHMOND, SAGADAHOC CTY. DRESDEN, LINCOLN CTY.

SUPERELEVATION TRANSITION

SHEET NUMBER

160

OF 238

Filename: ...\160_Superstructure_Superelevation Transition.dgn Division BRIDGE Username: dana.damren Date:3/27/2013

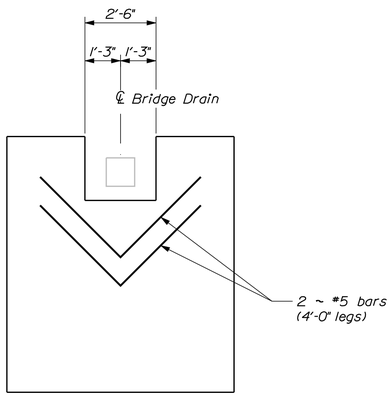

TYPICAL PRECAST DECK PANEL PLAN
Showing Bridge Drain Blockout

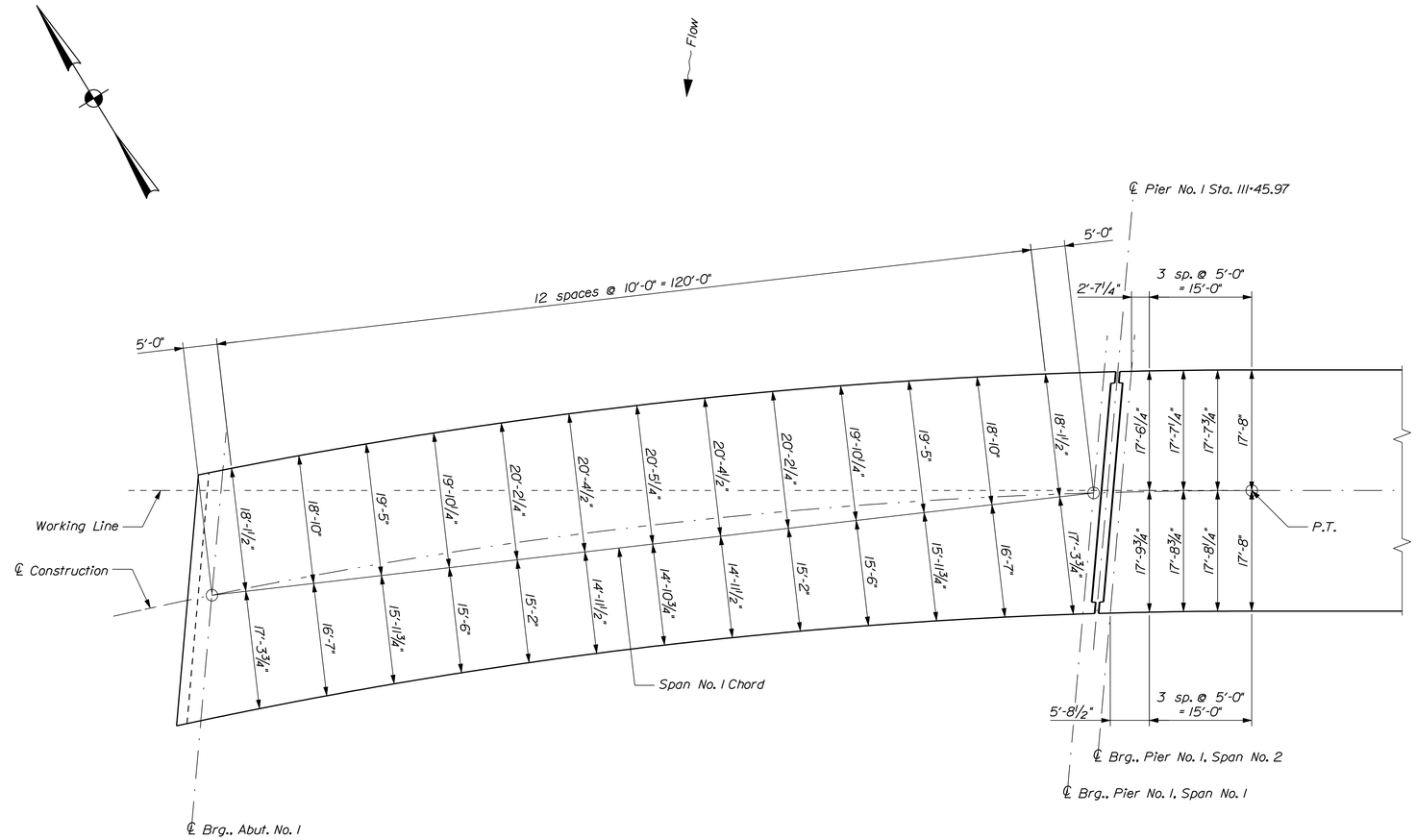

SUPERSTRUCTURE SLAB ~ FASCIA OFFSETS
Dimensions are horizontal

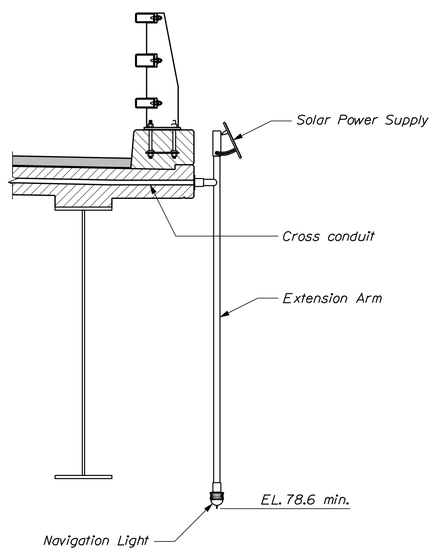

NAVIGATION LIGHT SECTION
Green center of channel navigation lights shall be visible from 360 degrees.

STATE OF MAINE
DEPARTMENT OF TRANSPORTATION

AC-BH-1267(400)

WIN 12674.00

BRIDGE NO. 2506

BRIDGE PLANS

		BY	DATE
PROJ. MANAGER	N. Benoit		
DESIGN-DETAILED	B Reeves	D. Domren	June 2012
CHECKED-REVIEWED	E. Caswell	B. Nichols	6/12\3/13
DESIGN2-DETAILED2	------	------	------
DESIGN3-DETAILED3	------	------	------
REVISIONS 1	------	------	------
REVISIONS 2	------	------	------
REVISIONS 3	------	------	------
REVISIONS 4	------	------	------
FIELD CHANGES	------	------	------

SIGNATURE

P.E. NUMBER

DATE

MAINE KENNEBEC BRIDGE
KENNEBEC RIVER
RICHMOND, SAGADAHOC CTY. DRESDEN, LINCOLN CTY.

FASCIA OFFSETS & MISC. DTLS.

SHEET NUMBER
161
OF 238

Filename: ...\161_Superstructure Slab Fascia Offsets.dgn Division: BRIDGE Username: dana.domren Date:3/27/2013

SUPERSTRUCTURE NOTES (General)

1. All reinforcing steel in the slab and curbs shall meet the requirements of Special Provisions Section 503, Corrosion Resistant Reinforcing.

2. Reinforcing steel shall have a minimum concrete cover of 2 inches unless otherwise noted.

3. Adjust reinforcing steel to fit around the bridge drains in a manner approved by the Resident. Do not cut transverse reinforcing bars.

4. Form a one inch V-groove on the fascias at the horizontal joint between the curb and slab.

5. At the Contractor's option, Precast Deck Panels may be used in place of the full depth cast-in-place deck slab, in accordance with Special Provisions Section 502, Structural Concrete - Precast Deck Panels, and in accordance with the Standard Details.

6. Precast Deck Panel reinforcing steel does not require a dual coating system.

7. Payment for reinforcing steel fabricated, delivered, and placed in the cast-in-place portion of the structural concrete slab will be considered incidental to the appropriate Standard Specifications Section 502 pay item.

8. Provide 3 additional stirrups in the curbs at each Transition Barrier location.

9. The Contractor shall install Transition Barrier vertical closed stirrups, as shown on the Transition Barrier detail sheets, prior to the placement of the curb concrete.

10. Refer to Utility Plans for Conduit Support System details.

SUPERSTRUCTURE NOTES (Span No. 1)

1. The theoretical blocking used for design of Span No. 1 is 3 3/8 inches at the centerline of bearing of the abutments and piers. Refer to Standard Detail 502(02) for blocking details.

2. The superstructure slab for Span No. 1 shall be placed continuously and shall be kept plastic until the entire placement has been made.

SUPERSTRUCTURE NOTES (Span No. 2 through 7)

1. The theoretical blocking used for design of the structure is 4 1/2 inches at the centerline of bearing of the abutments and piers. Refer to Standard Detail 502(02) for blocking details.

2. Unless the superstructure slab concrete is placed in one continuous operation, the initial placement shall begin at the Pier No. 1 end of the deck slab and shall terminate at the completion of a positive moment section. Successive placements shall proceed from the end of the previous placement, terminate at the completion of a positive moment section, and include two or more spans. Concrete in a placement shall be kept plastic one complete span behind the span being placed. A minimum of 5 days shall elapse between successive partial placements. The superstructure slab concrete placement sequence shall be approved by the Resident.

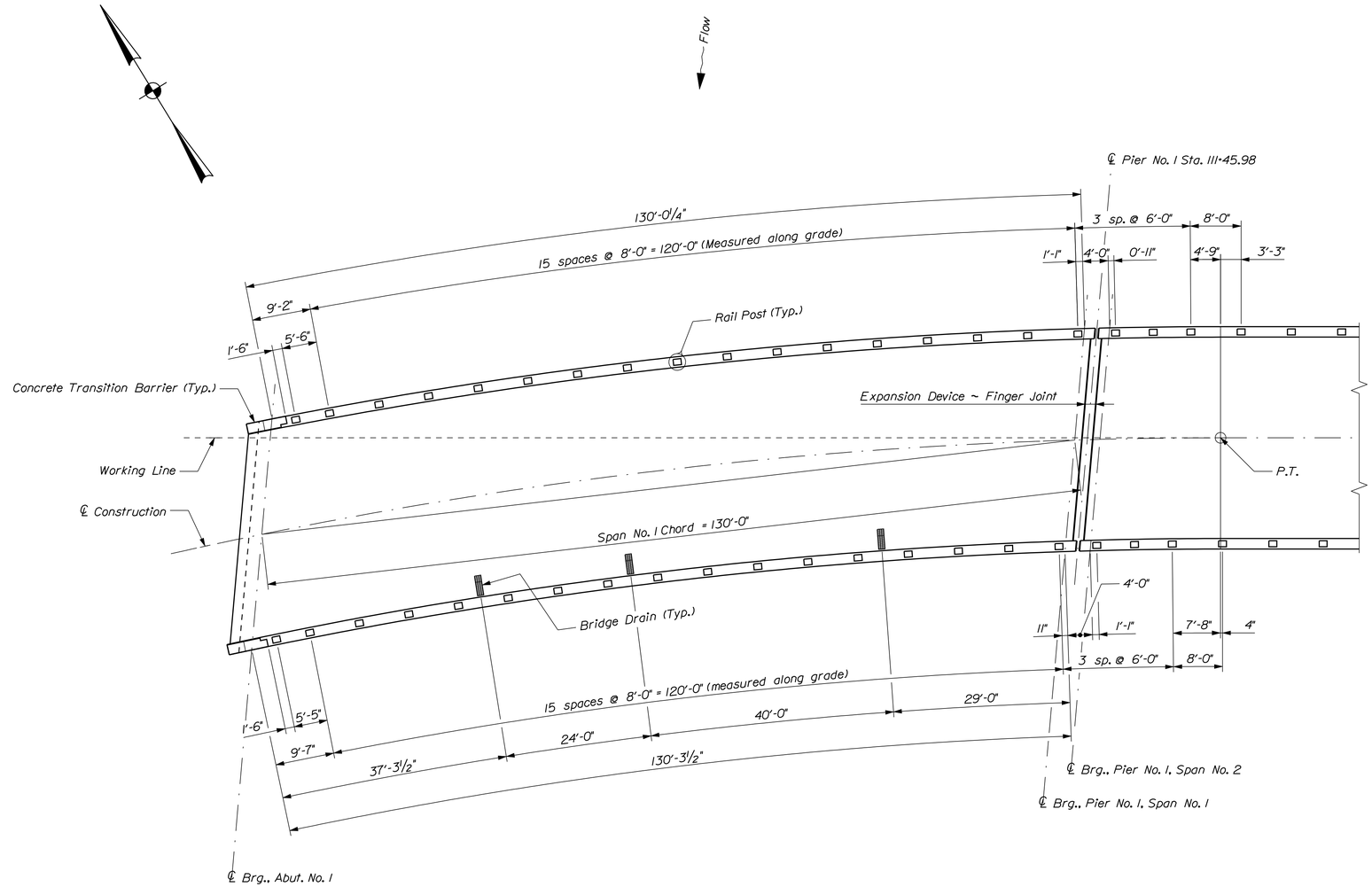

SUPERSTRUCTURE SLAB ~ SPAN NO. 1

Dimensions are horizontal except as noted

STATE OF MAINE
DEPARTMENT OF TRANSPORTATION

AC-BH-1267(400)

WIN 12674.00

BRIDGE NO. 2506

BRIDGE PLANS

PROJ. MANAGER	N. Benoit	BY	DATE
DESIGN-DETAILED	B. Reeves	D. Damren	June 2012
CHECKED-REVIEWED	E. Caswell	B. Nichols	6/12/13
DESIGN2-DETAILED2	------	------	------
DESIGN3-DETAILED3	------	------	------
REVISIONS: 1	------	------	------
REVISIONS: 2	------	------	------
REVISIONS: 3	------	------	------
REVISIONS: 4	------	------	------
FIELD CHANGES	------	------	------

SIGNATURE

P.E. NUMBER

DATE

MAINE KENNEBEC BRIDGE
KENNEBEC RIVER
RICHMOND, SAGADAHOC CTY. DRESDEN, LINCOLN CTY.

SPRSTR. SLAB SPAN NO. 1

SHEET NUMBER

162

OF 238

Filename: ...\162_Superstructure Slab Span No. 1.dgn Division: BRIDGE Username: dana.damren Date:4/10/2013

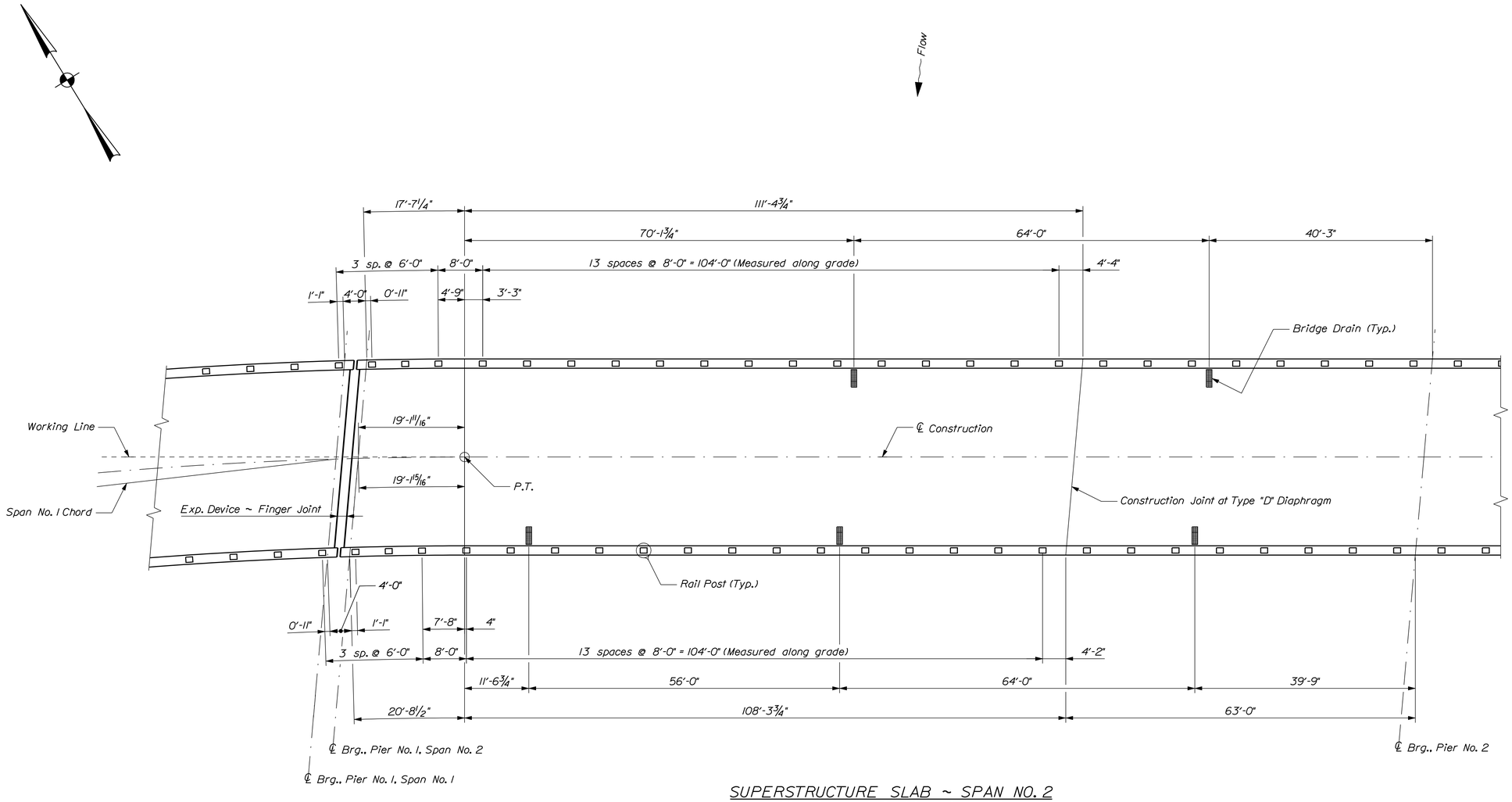

SUPERSTRUCTURE SLAB ~ SPAN NO. 2

Dimensions are horizontal except as noted

Filename: ...\163_Superstructure Slab Span No. 2.dgn Division: BRIDGE Username: dana.damren Date:4/2/2013

STATE OF MAINE
DEPARTMENT OF TRANSPORTATION

AC-BH-1267(400)

WIN 12674.00

BRIDGE NO. 2506

BRIDGE PLANS

		BY	DATE
PROJ. MANAGER	N. Benoit		
DESIGN-DETAILED	D. Eaton	D. Damren	June 2012
CHECKED-REVIEWED	E. Caswell	B. Nichols	6/12 3/13
DESIGN2-DETAILED2	------	------	------
DESIGN3-DETAILED3	------	------	------
REVISIONS 1	------		------
REVISIONS 2	------		------
REVISIONS 3	------		------
REVISIONS 4	------		------
FIELD CHANGES	------		------

SIGNATURE

P.E. NUMBER

DATE

MAINE KENNEBEC BRIDGE
KENNEBEC RIVER
RICHMOND, SAGADAHOC CTY. DRESDEN, LINCOLN CTY.

SPRSTR. SLAB SPAN NO. 2

SHEET NUMBER

163

OF 238

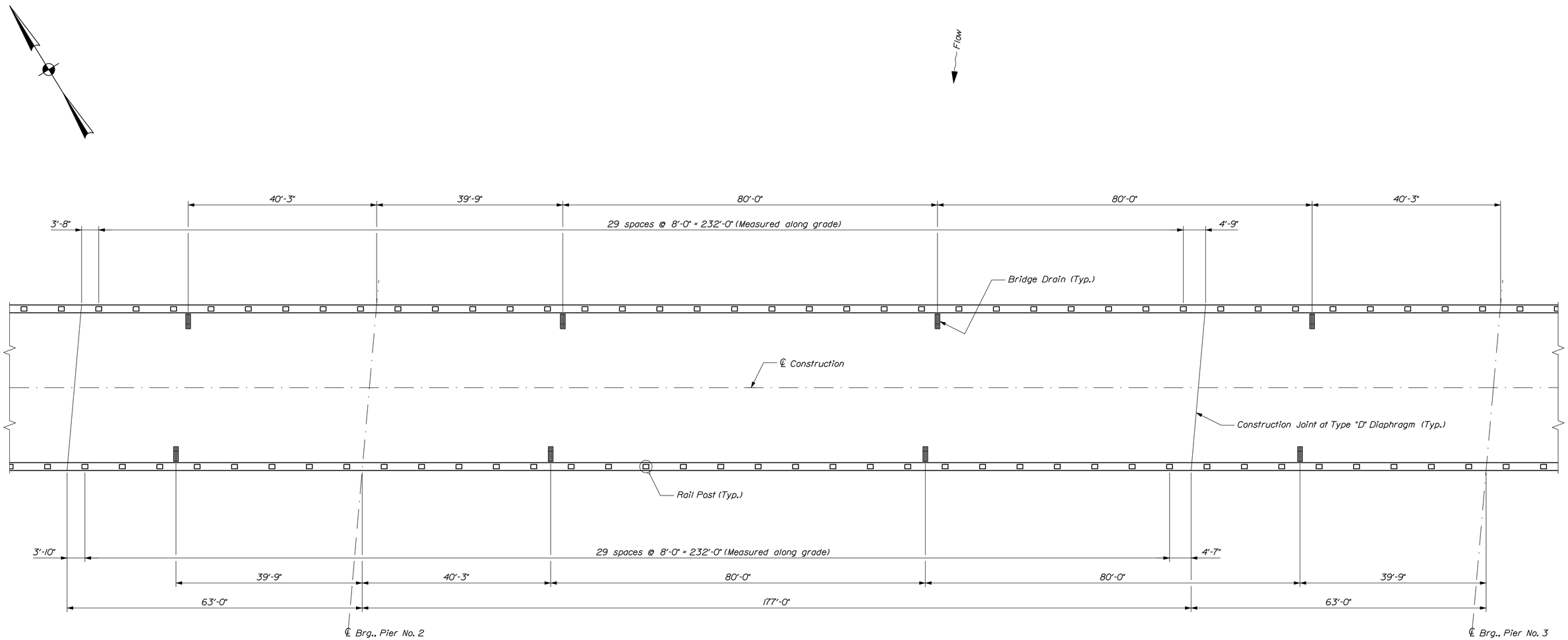

SUPERSTRUCTURE SLAB ~ SPAN NO. 3

Dimensions are horizontal except as noted

Filename: ...\164_Superstructure Slab Span No. 3.dgn Division: BRIDGE Username: dana.damren Date:4/2/2013

MAINE KENNEBEC BRIDGE
KENNEBEC RIVER
RICHMOND, SAGADAHOC CTY. DRESDEN, LINCOLN CTY.

SPRSTR. SLAB SPAN NO. 3

		BY	DATE
PROJ. MANAGER	N. Benoit		
DESIGN-DETAILED	D. Eaton	D. Damren	June 2012
CHECKED-REVIEWED	E. Caswell	B. Nichols	6/12 3/13
DESIGN2-DETAILED2	------	------	------
DESIGN3-DETAILED3	------	------	------
REVISIONS 1	------		------
REVISIONS 2	------		------
REVISIONS 3	------		------
REVISIONS 4	------		------
FIELD CHANGES	------		------

SIGNATURE
P.E. NUMBER
DATE

STATE OF MAINE
DEPARTMENT OF TRANSPORTATION

AC-BH-1267(400)

BRIDGE NO. 2506 WIN 12674.00 BRIDGE PLANS

SHEET NUMBER
164
OF 238

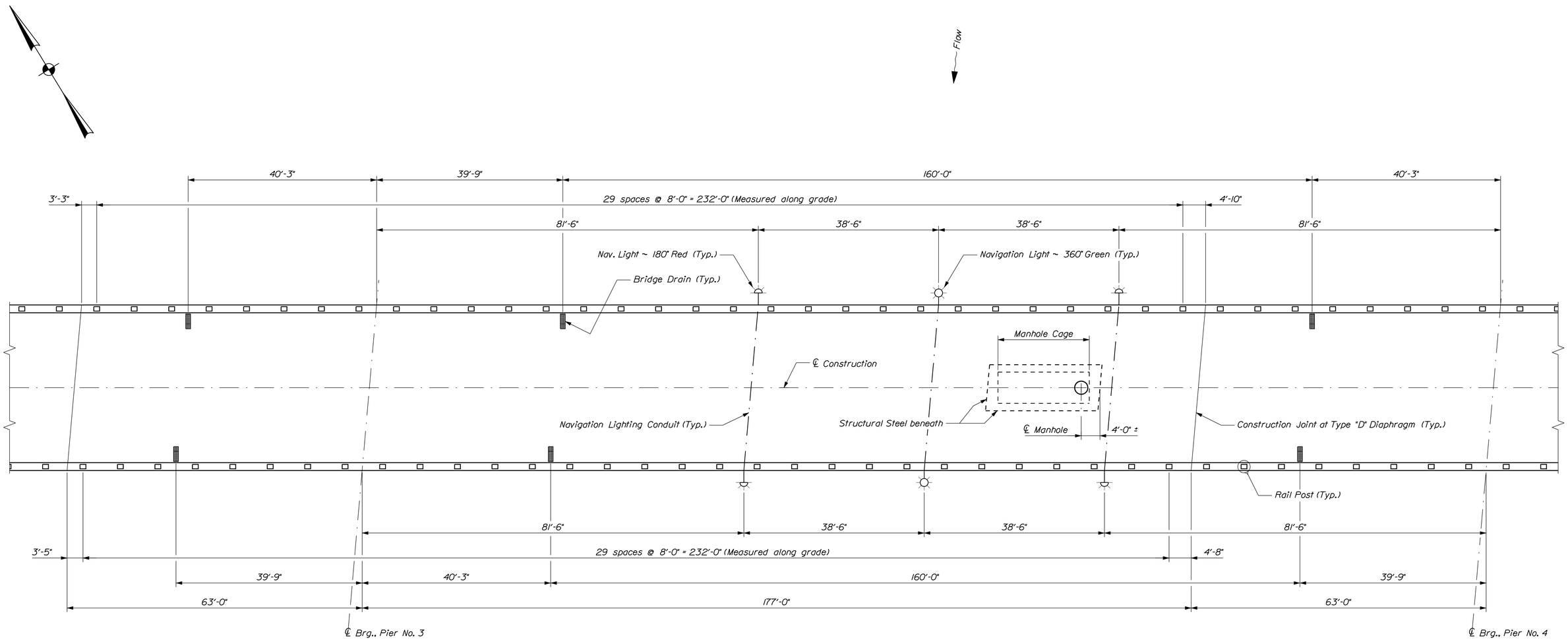

SUPERSTRUCTURE SLAB ~ SPAN NO. 4

Dimensions are horizontal except as noted

Filename: ...\165_Superstructure Slab Span No. 4.dgn Division: BRIDGE Username: dana.damren Date:4/2/2013

MAINE KENNEBEC BRIDGE KENNEBEC RIVER RICHMOND, SAGADAHOC CTY. DRESDEN, LINCOLN CTY.	PROJ. MANAGER	N. Benoit	BY	DATE
	DESIGN-DETAILED	D. Eaton	D. Damren	June 2012
	CHECKED-REVIEWED	E. Caswell	B. Nichols	6/12 3/13
	DESIGN2-DETAILED2	------	------	------
	DESIGN3-DETAILED3	------	------	------
SPRSTR. SLAB SPAN NO. 4	REVISIONS 1	------		------
	REVISIONS 2	------		------
	REVISIONS 3	------		------
	REVISIONS 4	------		------
	FIELD CHANGES	------		------

SIGNATURE

P.E. NUMBER

DATE

STATE OF MAINE
DEPARTMENT OF TRANSPORTATION

AC-BH-1267(400)

BRIDGE NO. 2506 | WIN 12674.00 | BRIDGE PLANS

SHEET NUMBER 165 OF 238

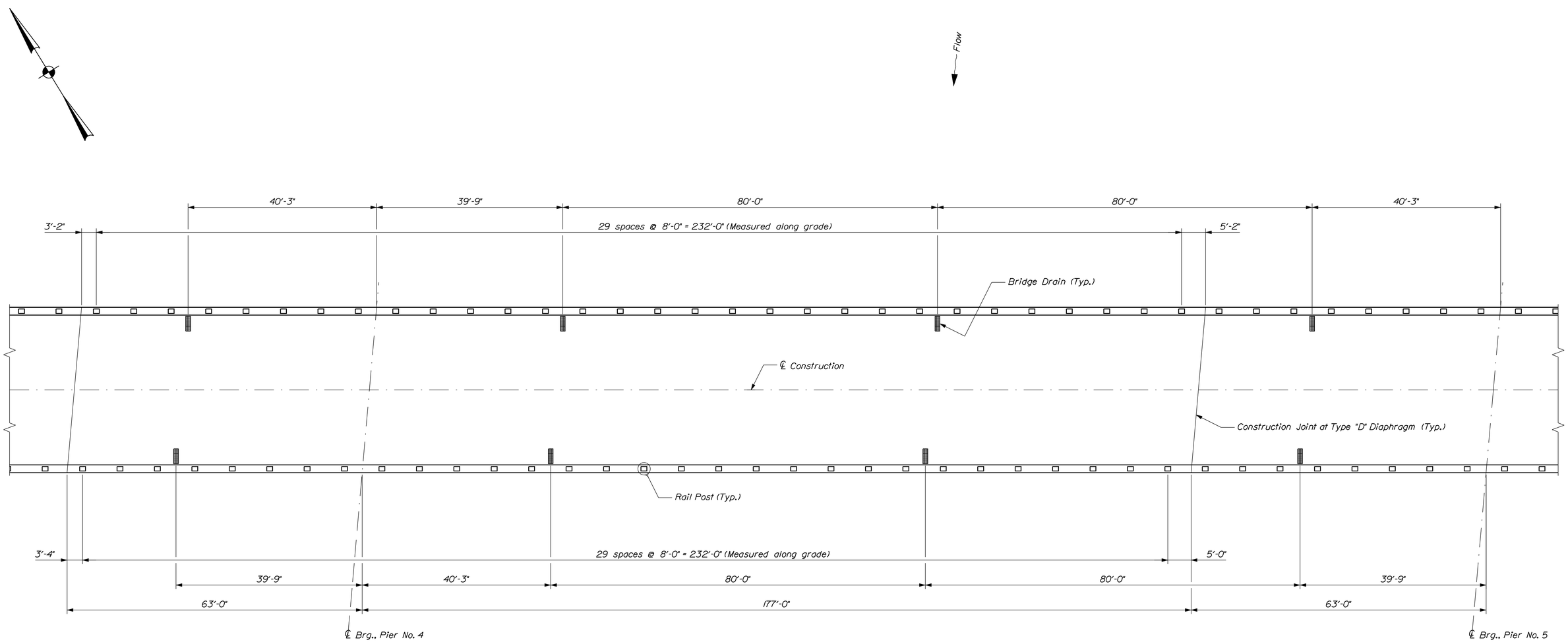

SUPERSTRUCTURE SLAB ~ SPAN NO. 5

Dimensions are horizontal except as noted

Filename: ...\166_Superstructure Slab Span No. 5.dgn Division: BRIDGE Username: dana.damren Date:4/2/2013

MAINE KENNEBEC BRIDGE
KENNEBEC RIVER
RICHMOND, SAGADAHOC CTY. DRESDEN, LINCOLN CTY.

SPRSTR. SLAB SPAN NO. 5

PROJ. MANAGER	N. Benoit	BY	DATE
DESIGN-DETAILED	D. Eaton	D. Damren	June 2012
CHECKED-REVIEWED	E. Coswell	B. Nichols	6/12 3/13
DESIGN2-DETAILED2	------	------	------
DESIGN3-DETAILED3	------	------	------
REVISIONS 1	------		------
REVISIONS 2	------		------
REVISIONS 3	------		------
REVISIONS 4	------		------
FIELD CHANGES	------		------

SIGNATURE

P.E. NUMBER

DATE

STATE OF MAINE
DEPARTMENT OF TRANSPORTATION

AC-BH-1267(400)

BRIDGE NO. 2506 | WIN 12674.00 | BRIDGE PLANS

SHEET NUMBER
166
OF 238

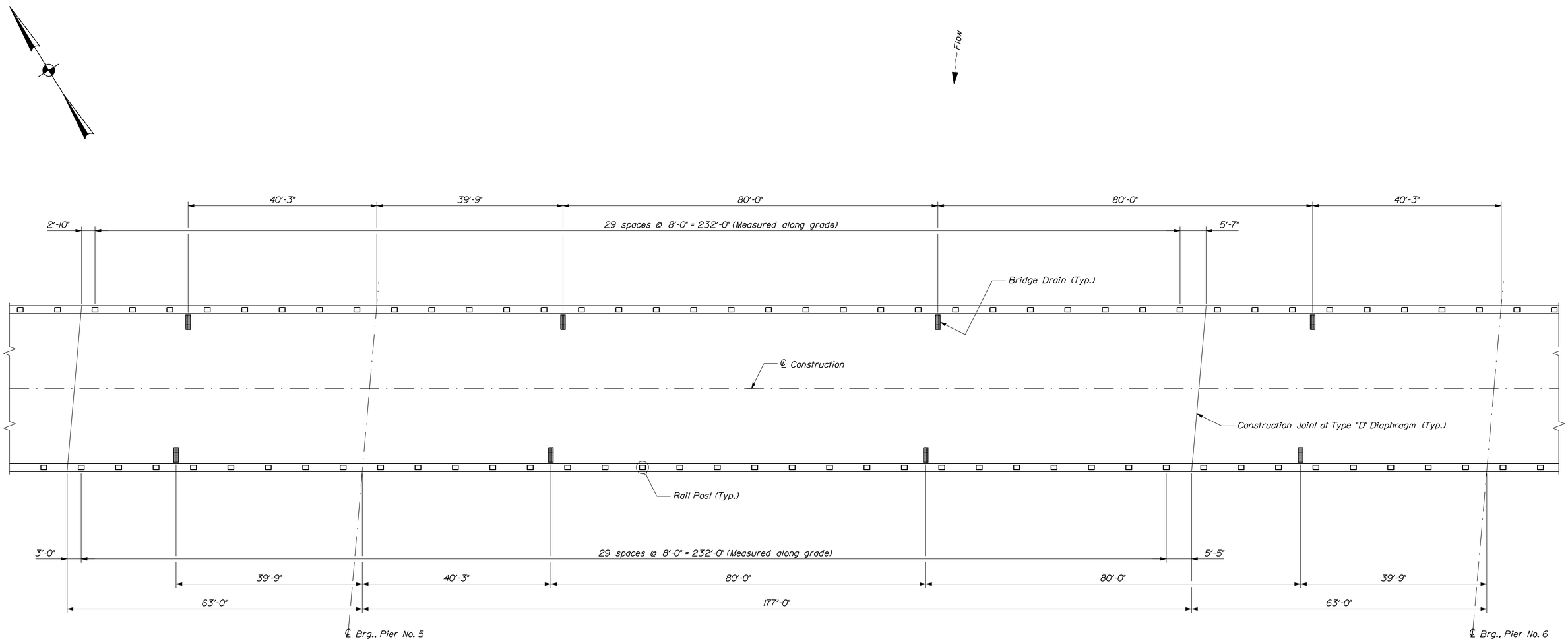

SUPERSTRUCTURE SLAB ~ SPAN NO. 6

Dimensions are horizontal except as noted

Filename: ...\167_Superstructure Slab Span No. 6.dgn Division: BRIDGE Username: dana.damren Date:4/2/2013

MAINE KENNEBEC BRIDGE KENNEBEC RIVER RICHMOND, SAGADAHOC CTY. DRESDEN, LINCOLN CTY.	PROJ. MANAGER	N. Benoit	BY	DATE
	DESIGN-DETAILED	D. Eaton	D. Damren	June 2012
	CHECKED-REVIEWED	E. Caswell	B. Nichols	6/12 3/13
	DESIGN2-DETAILED2	------	------	------
	DESIGN3-DETAILED3	------	------	------
	REVISIONS 1	------		------
	REVISIONS 2	------		------
	REVISIONS 3	------		------
	REVISIONS 4	------		------
	FIELD CHANGES	------		------

SIGNATURE

P.E. NUMBER

DATE

STATE OF MAINE
DEPARTMENT OF TRANSPORTATION

AC-BH-1267(400)

BRIDGE NO. 2506 | WIN 12674.00 | BRIDGE PLANS

SHEET NUMBER 167 OF 238

SPRSTR. SLAB SPAN NO. 6

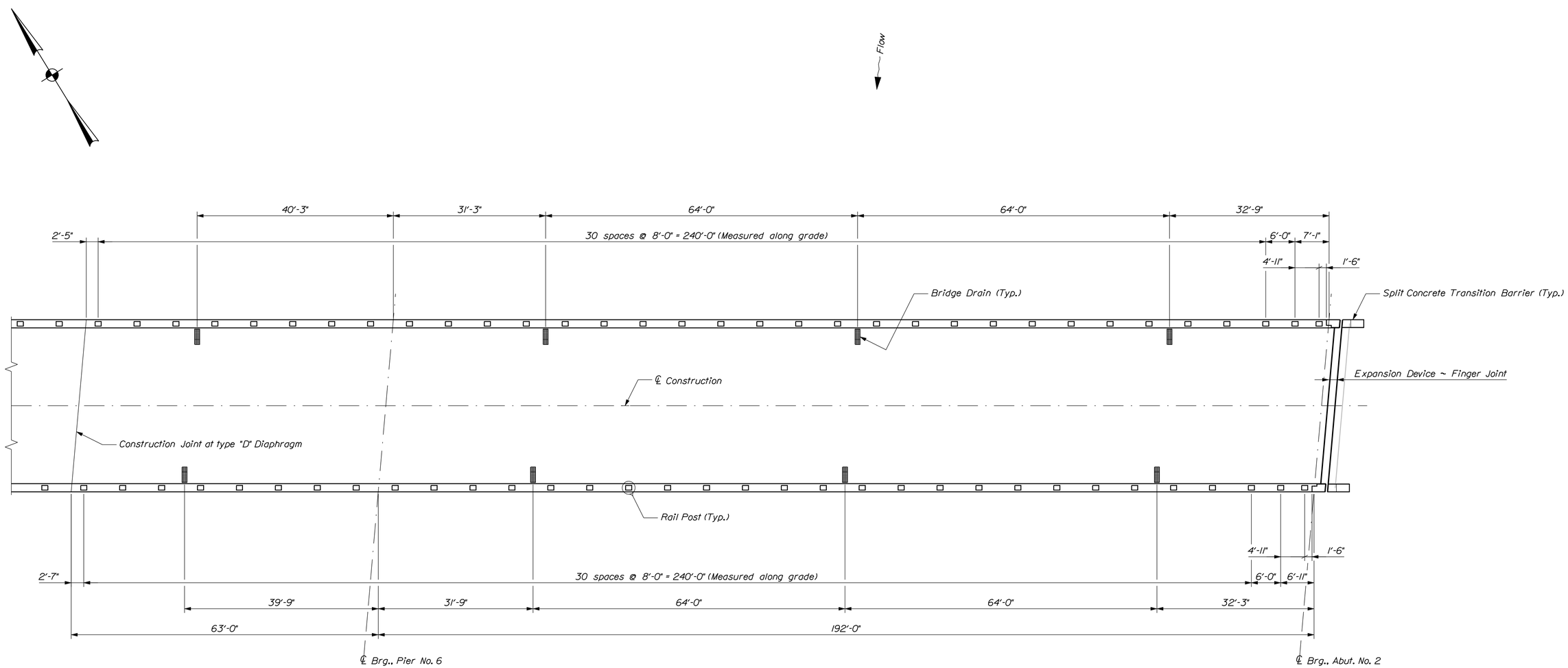

SUPERSTRUCTURE SLAB ~ SPAN NO. 7

Dimensions are horizontal except as noted

Filename: ...\168_Superstructure Slab Span No. 7.dgn Division: BRIDGE Username: dana.damren Date:4/2/2013

MAINE KENNEBEC BRIDGE
KENNEBEC RIVER
RICHMOND, SAGADAHOC CTY. DRESDEN, LINCOLN CTY.

SPRSTR. SLAB SPAN NO. 7

PROJ. MANAGER	N. Benoit	BY	DATE
DESIGN-DETAILED	D. Eaton	D. Damren	June 2012
CHECKED-REVIEWED	E. Coswell	B. Nichols	6/12 3/13
DESIGN2-DETAILED2	------	------	------
DESIGN3-DETAILED3	------	------	------
REVISIONS 1	------		------
REVISIONS 2	------		------
REVISIONS 3	------		------
REVISIONS 4	------		------
FIELD CHANGES	------		------

SIGNATURE

P.E. NUMBER

DATE

STATE OF MAINE
DEPARTMENT OF TRANSPORTATION

AC-BH-1267(400)

BRIDGE NO. 2506 WIN 12674.00 BRIDGE PLANS

SHEET NUMBER 168 OF 238

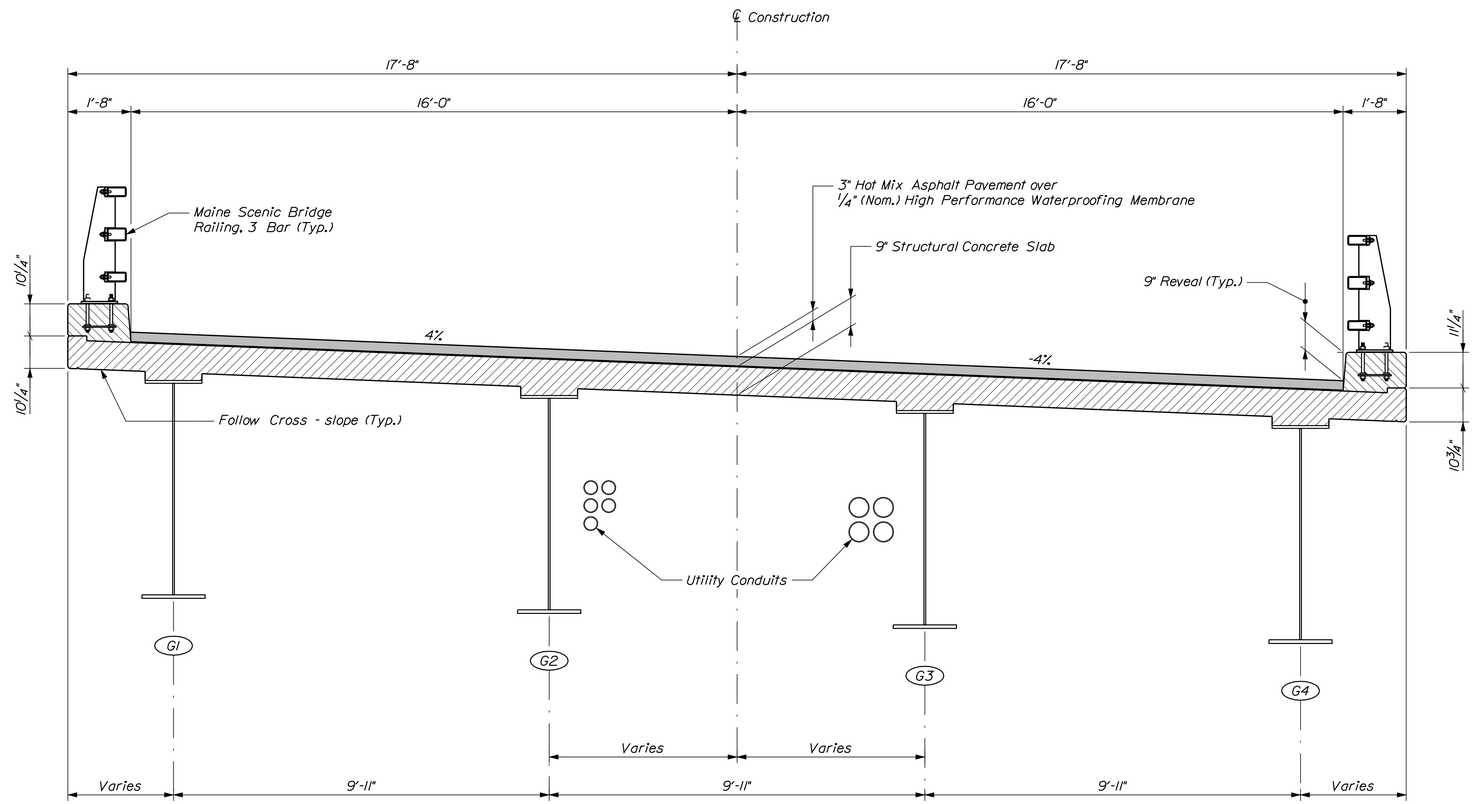

TRANSVERSE SECTION ~ SPAN NO. 1

PROJ. MANAGER	N. Benoit	BY	DATE
DESIGN-DETAILED	B. Reeves	D. Domren	June 2012
CHECKED-REVIEWED	E. Caswell	B. Nichols	6/12 3/13
DESIGN2-DETAILED2	------	------	------
DESIGN3-DETAILED3	------	------	------
REVISIONS 1	------	------	------
REVISIONS 2	------	------	------
REVISIONS 3	------	------	------
REVISIONS 4	------	------	------
FIELD CHANGES	------	------	------

SIGNATURE

P.E. NUMBER

DATE

STATE OF MAINE
DEPARTMENT OF TRANSPORTATION

AC-BH-1267(400)

WIN 12674.00

BRIDGE NO. 2506

BRIDGE PLANS

MAINE KENNEBEC BRIDGE
KENNEBEC RIVER
RICHMOND, SAGADAHOC CTY. DRESDEN, LINCOLN CTY.

TRANSVERSE SECTION SPAN NO. 1

SHEET NUMBER

169

OF 238

Filename: ...\169_Transverse Section_Span No. 1.dgn Division: BRIDGE Username: dana.domren Date:3/27/2013

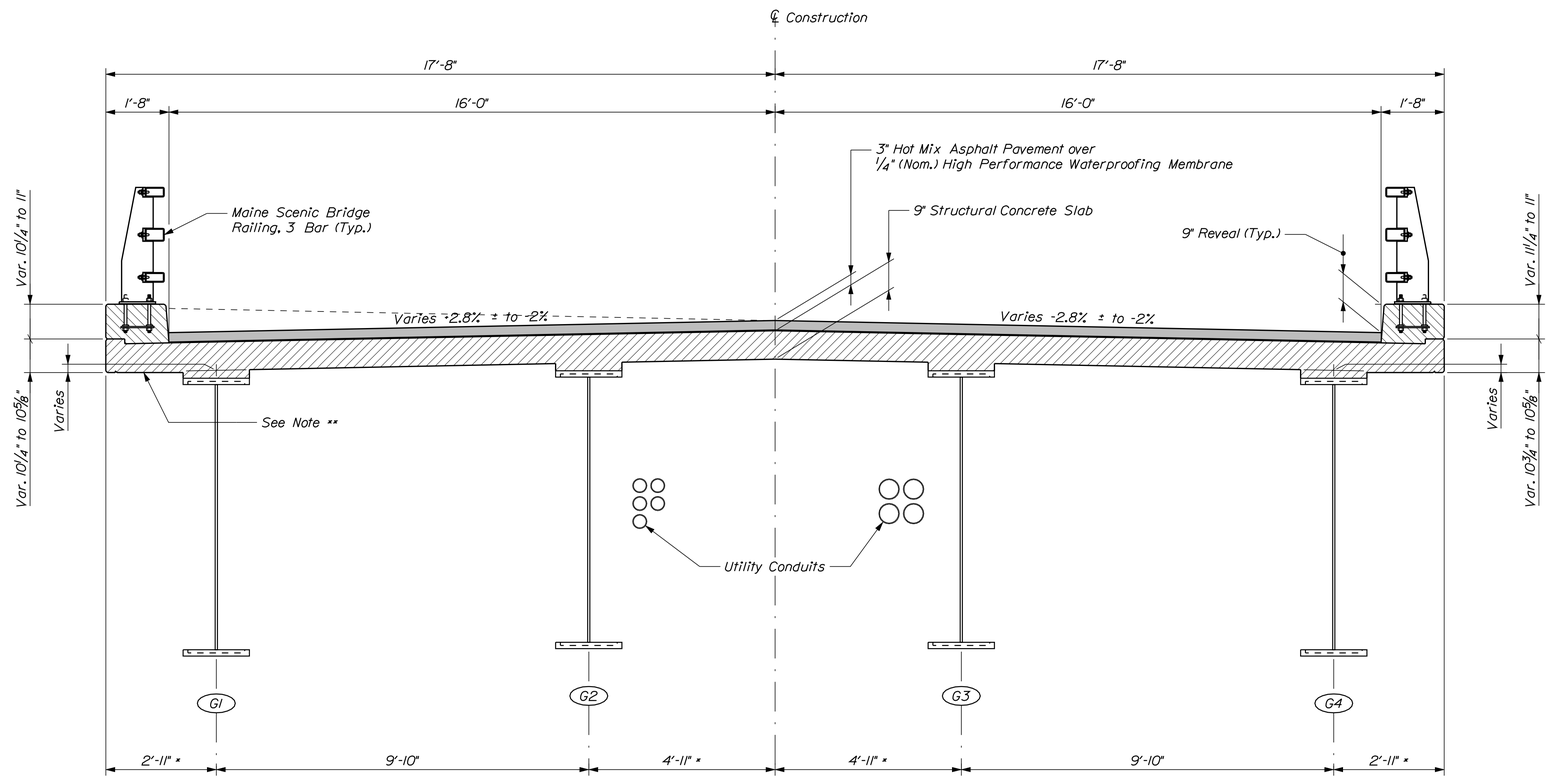

TRANSVERSE SECTION ~ SPAN NO. 2

* Dimensions vary in Curved Area

** Level in normal crown section; follow cross slope in superelevated section

Filename: ...\170_Transverse Section_Span No. 2.dgn Division: BRIDGE Username: dana.damren Date:3/27/2013

STATE OF MAINE
DEPARTMENT OF TRANSPORTATION

AC-BH-1267(400)

WIN 12674.00

BRIDGE NO. 2506

BRIDGE PLANS

PROJ. MANAGER	N. Benoit	BY	DATE	
DESIGN-DETAILED	D. Eaton	D. Damren	June 2012	SIGNATURE
CHECKED-REVIEWED	E. Caswell	B. Nichols	6/12/13	
DESIGN2-DETAILED2	------	------	------	P.E. NUMBER
DESIGN3-DETAILED3	------	------	------	
REVISIONS 1	------	------	------	
REVISIONS 2	------	------	------	DATE
REVISIONS 3	------	------	------	
REVISIONS 4	------	------	------	
FIELD CHANGES	------	------	------	

MAINE KENNEBEC BRIDGE
KENNEBEC RIVER
RICHMOND, SAGADAHOC CTY. DRESDEN, LINCOLN CTY.

TRANSVERSE SECTION SPAN NO. 2

SHEET NUMBER

170

OF 238

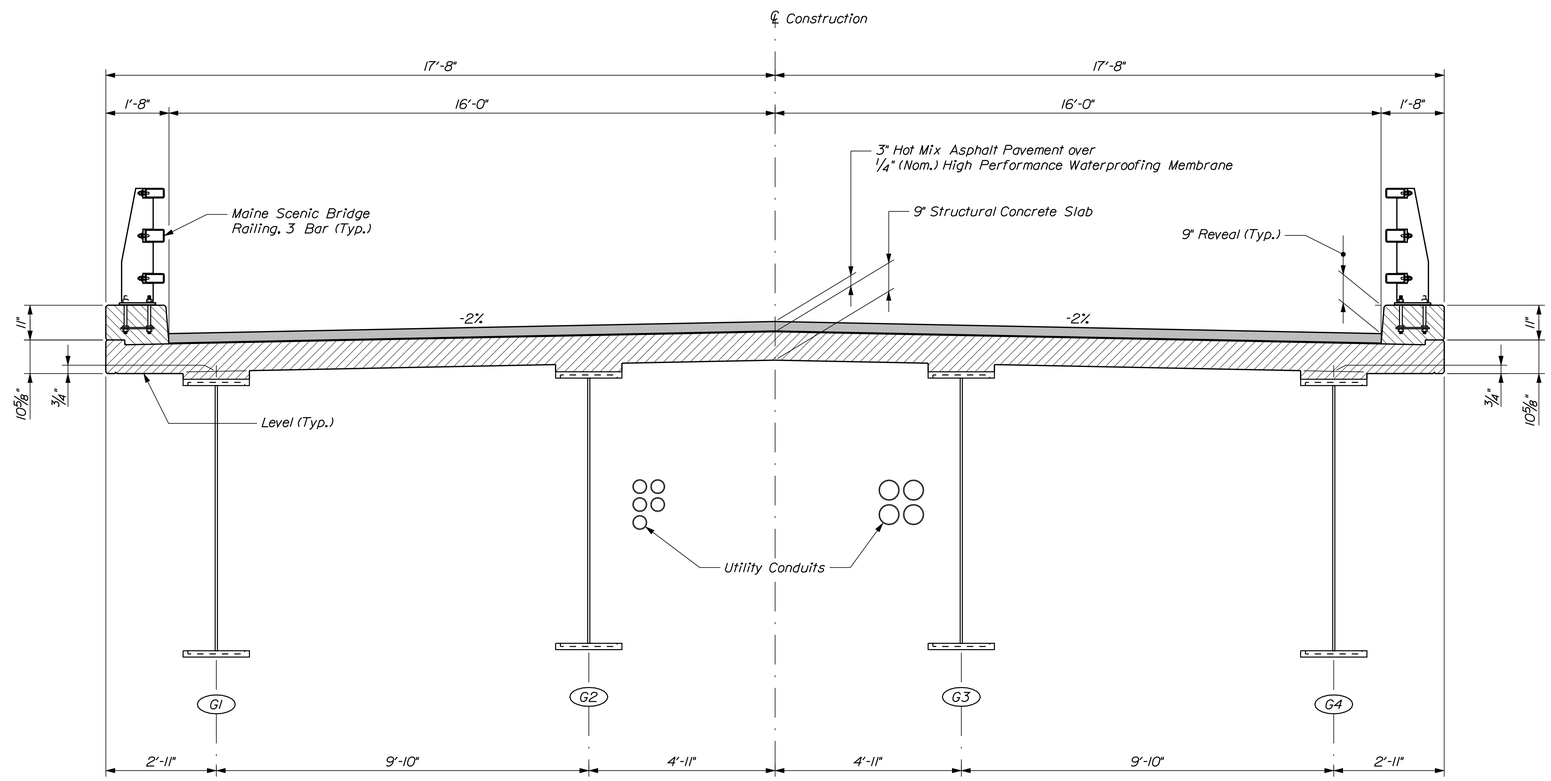

TRANSVERSE SECTION ~ SPANS NO. 3 THROUGH 7

PROJ. MANAGER	N. Benoit	BY	DATE
DESIGN-DETAILED	D. Eaton	D. Damren	June 2012
CHECKED-REVIEWED	E. Caswell	B. Nichols	6/12 3/13
DESIGN2-DETAILED2	------	------	------
DESIGN3-DETAILED3	------	------	------
REVISIONS 1	------	------	------
REVISIONS 2	------	------	------
REVISIONS 3	------	------	------
REVISIONS 4	------	------	------
FIELD CHANGES	------	------	------

SIGNATURE

P.E. NUMBER

DATE

STATE OF MAINE
DEPARTMENT OF TRANSPORTATION

AC-BH-1267(400)

WIN 12674.00

BRIDGE NO. 2506

BRIDGE PLANS

MAINE KENNEBEC BRIDGE
KENNEBEC RIVER
RICHMOND, SAGADAHOC CTY. DRESDEN, LINCOLN CTY.

TRANS. SECTION SPAN NO. 3 - 7

SHEET NUMBER

171

OF 238

Filename: ...\171_Transverse Section_Span No. 3 - 7.dgn Division: BRIDGE Username: dana.damren Date:3/27/2013

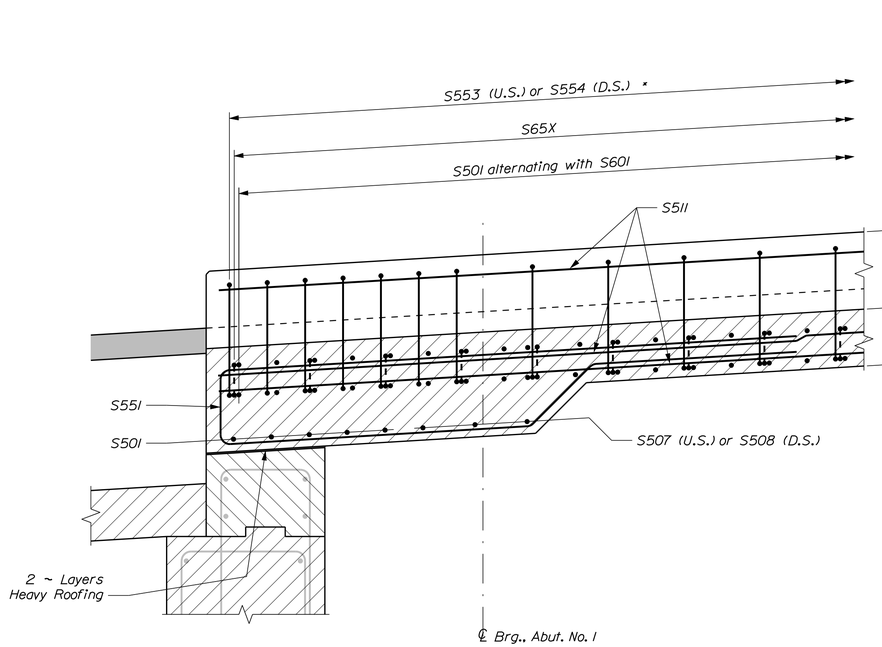

LONGITUDINAL SECTION AT ABUTMENT NO. 1 ~ FACE OF CURB

* Additional curb reinforcing at Rail Posts not shown

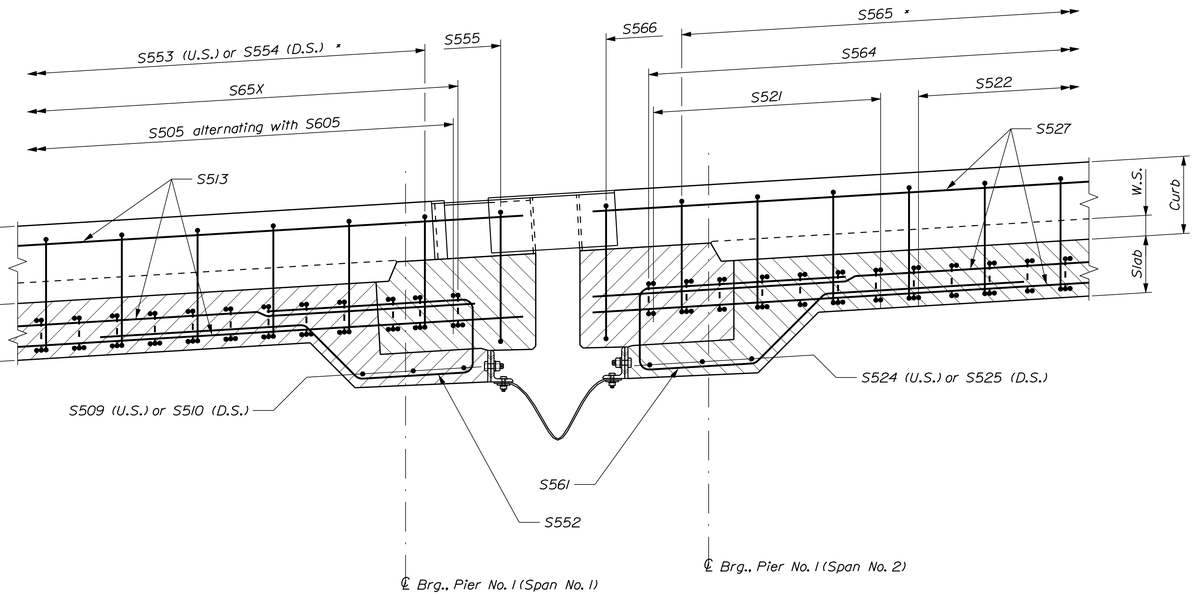

LONGITUDINAL SECTION AT PIER NO. 1 ~ FACE OF CURB

* Additional curb reinforcing at Rail Posts not shown

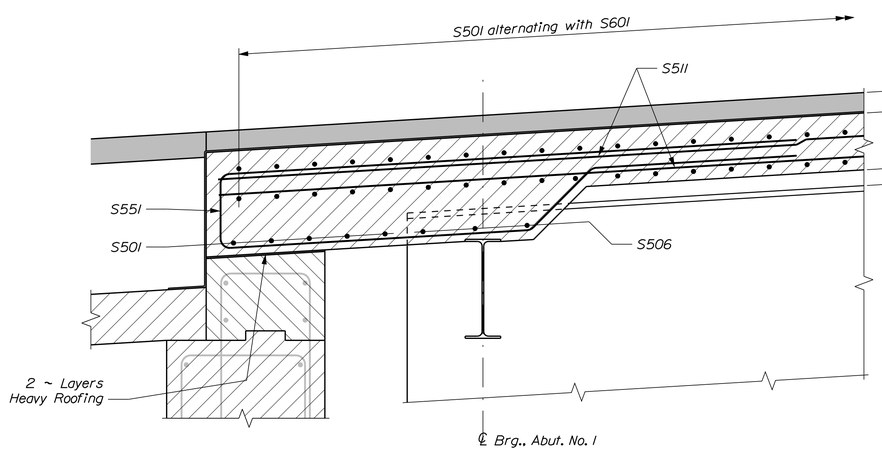

LONGITUDINAL SECTION AT ABUTMENT NO. 1 ~ ROADWAY

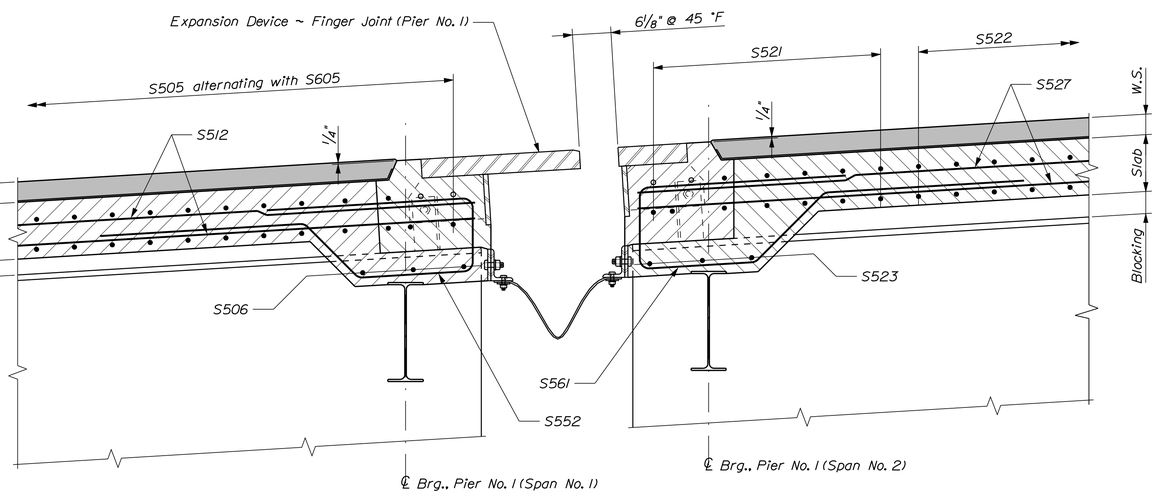

LONGITUDINAL SECTION AT PIER NO. 1 ~ ROADWAY

○ Cut bar to clear obstructions

STATE OF MAINE
DEPARTMENT OF TRANSPORTATION

AC-BH-1267(400)

WIN 12674.00

BRIDGE NO. 2506

BRIDGE PLANS

		BY	DATE
PROJ. MANAGER	N. Benoit		
DESIGN-DETAILED	D. Eaton	D. Damren	6/12 10/12
CHECKED-REVIEWED	E. Caswell	B. Nichols	6/12 3/13
DESIGN2-DETAILED2	------	------	------
DESIGN3-DETAILED3	------	------	------
REVISIONS 1	------	------	------
REVISIONS 2	------	------	------
REVISIONS 3	------	------	------
REVISIONS 4	------	------	------
FIELD CHANGES	------	------	------

SIGNATURE

P.E. NUMBER

DATE

MAINE KENNEBEC BRIDGE
KENNEBEC RIVER
RICHMOND, SAGADAHOC CTY. DRESDEN, LINCOLN CTY.

SUPERSTRUCTURE SECTIONS

SHEET NUMBER

172

OF 238

Filename: ...\172_Superstructure_Sections.dgn Division: BRIDGE Username: dana.damren Date:3/27/2013

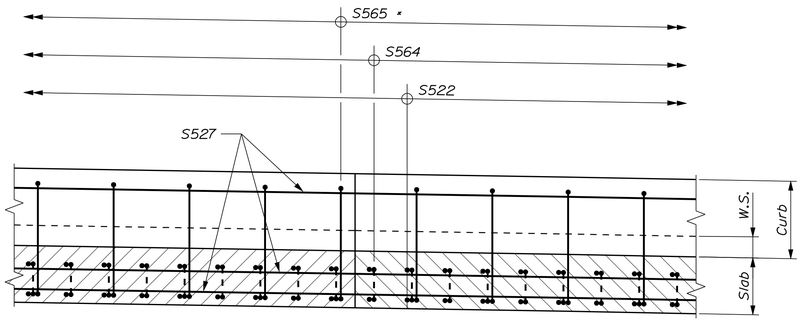

LONGITUDINAL SECTION AT CONSTRUCTION JOINT ~ FACE OF CURB

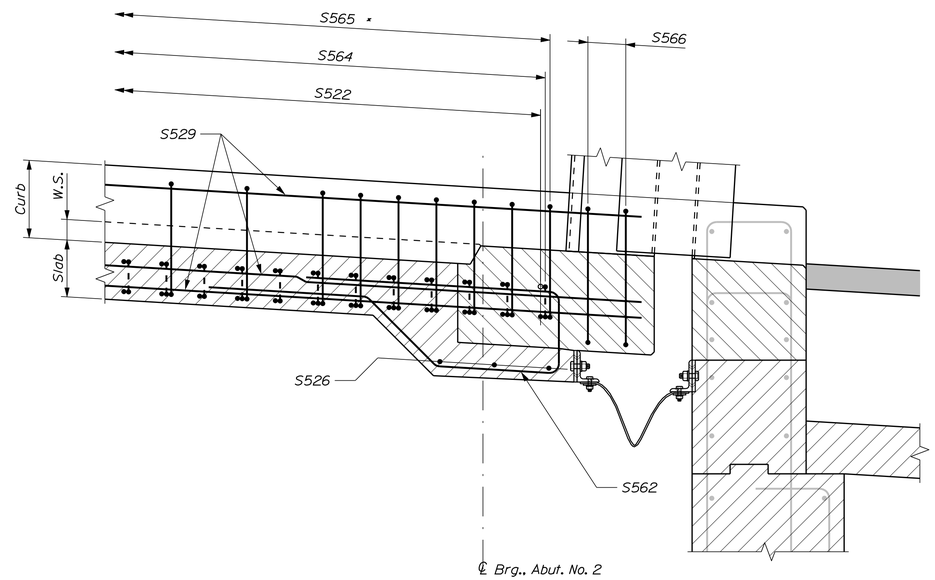

LONGITUDINAL SECTION AT ABUTMENT NO. 2 ~ FACE OF CURB

* Additional curb reinforcing at Rail Posts not shown

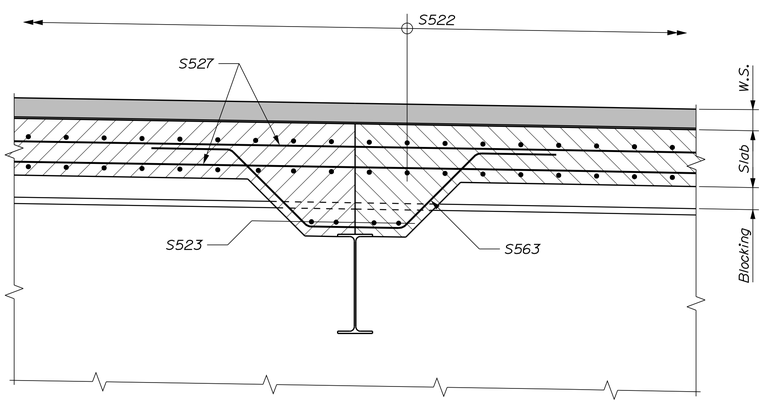

LONGITUDINAL SECTION AT CONSTRUCTION JOINT ~ ROADWAY

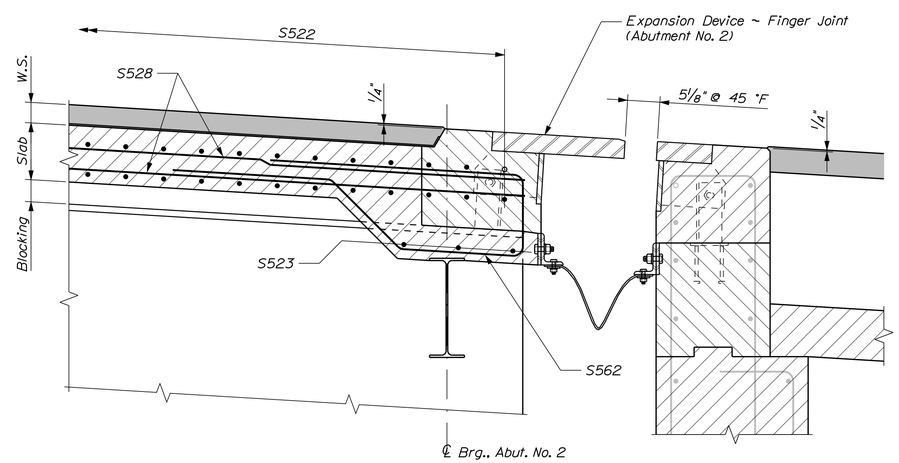

LONGITUDINAL SECTION AT ABUTMENT NO. 2 ~ ROADWAY

° Cut bar to clear obstructions

STATE OF MAINE
DEPARTMENT OF TRANSPORTATION

AC-BH-1267(400)

WIN 12674.00

BRIDGE NO. 2506

BRIDGE PLANS

PROJ. MANAGER	N. Benoit	BY	DATE	
DESIGN-DETAILED	D. Eaton	D. Damren	6/12	10/12
CHECKED-REVIEWED	E. Caswell	B. Nichols	6/12	3/13
DESIGN2-DETAILED2	------	------	------	SIGNATURE
DESIGN3-DETAILED3	------	------	------	P.E. NUMBER
REVISIONS 1	------	------	------	
REVISIONS 2	------	------	------	
REVISIONS 3	------	------	------	DATE
REVISIONS 4	------	------	------	
FIELD CHANGES	------	------	------	

MAINE KENNEBEC BRIDGE
KENNEBEC RIVER
RICHMOND, SAGADAHOC CTY. DRESDEN, LINCOLN CTY.

SUPERSTRUCTURE SECTIONS

SHEET NUMBER

173

OF 238

Filename: ...\173_Superstructure_Sections.dgn Division: BRIDGE Username: dana.damren Date:3/27/2013

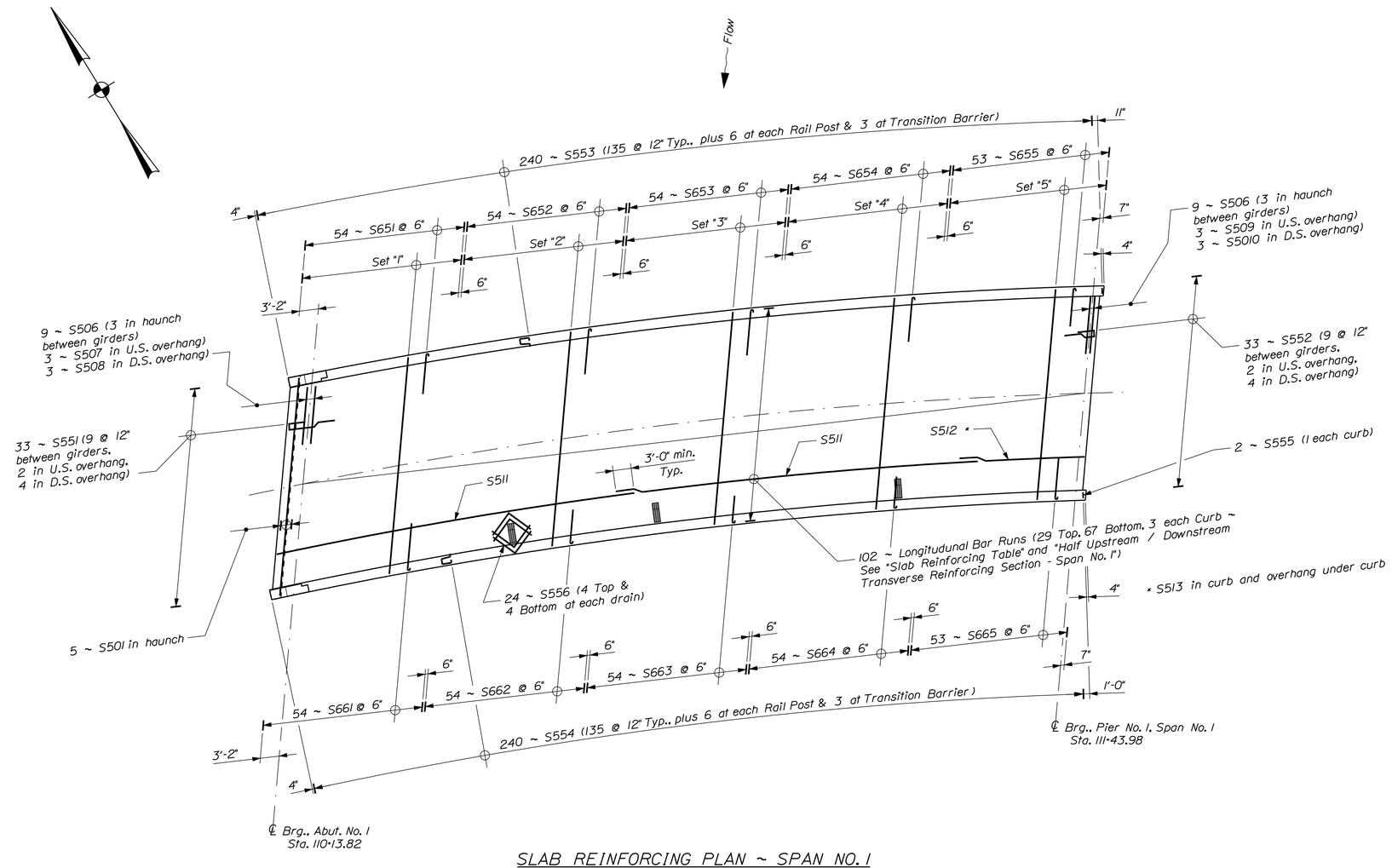

SLAB REINFORCING PLAN ~ SPAN NO. 1

SLAB REINFORCING TABLE					
Longitudinal Bar Runs					
Location	No. Runs	Bars	Qty. S511	Qty. S512	Qty. S513
Typical Slab	80	2 ~ S511, 1 ~ S512	160	80	--
Slab Under Curb	8 x 2	2 ~ S511, 1 ~ S513	32	--	16
Curbs	3 x 2	2 ~ S511, 1 ~ S513	12	--	6
Total Bars			204	80	22
Transverse Bar Sets					
Location	Bars				
Set "1"	54 each ~ S501 , S601 (27 each alternating @ 6" Top & Bot.)				
Set "2"	54 each ~ S502 , S602 (27 each alternating @ 6" Top & Bot.)				
Set "3"	54 each ~ S503 , S603 (27 each alternating @ 6" Top & Bot.)				
Set "4"	54 each ~ S504 , S604 (27 each alternating @ 6" Top & Bot.)				
Set "5"	54 ~ S505, 52 ~ S605 (27 ~ S505 alt. @ 6" with 26 ~ S605 Top & Bot.)				

STATE OF MAINE
DEPARTMENT OF TRANSPORTATION

AC-BH-1267(400)

WIN 12674.00

BRIDGE NO. 2506

BRIDGE PLANS

PROJ. MANAGER	N. Benoit	BY	DATE
DESIGN-DETAILED	B. Reeves	D. Damren	June 2012
CHECKED-REVIEWED	E. Caswell	B. Nichols	6/12/13
DESIGN2-DETAILED2	------	------	SIGNATURE
DESIGN3-DETAILED3	------	------	P.E. NUMBER
REVISIONS 1	------	------	DATE
REVISIONS 2	------	------	
REVISIONS 3	------	------	
REVISIONS 4	------	------	
FIELD CHANGES	------	------	

MAINE KENNEBEC BRIDGE
KENNEBEC RIVER
RICHMOND, SAGADAHOC CTY. DRESDEN, LINCOLN CTY.

SPRSTR. REINF. SPAN NO. 1

SHEET NUMBER
174
OF 238

Filename: ...\174_Superstructure Reinforcing Span No.1.dgn Division: BRIDGE Username: dana.damren Date:4/2/2013

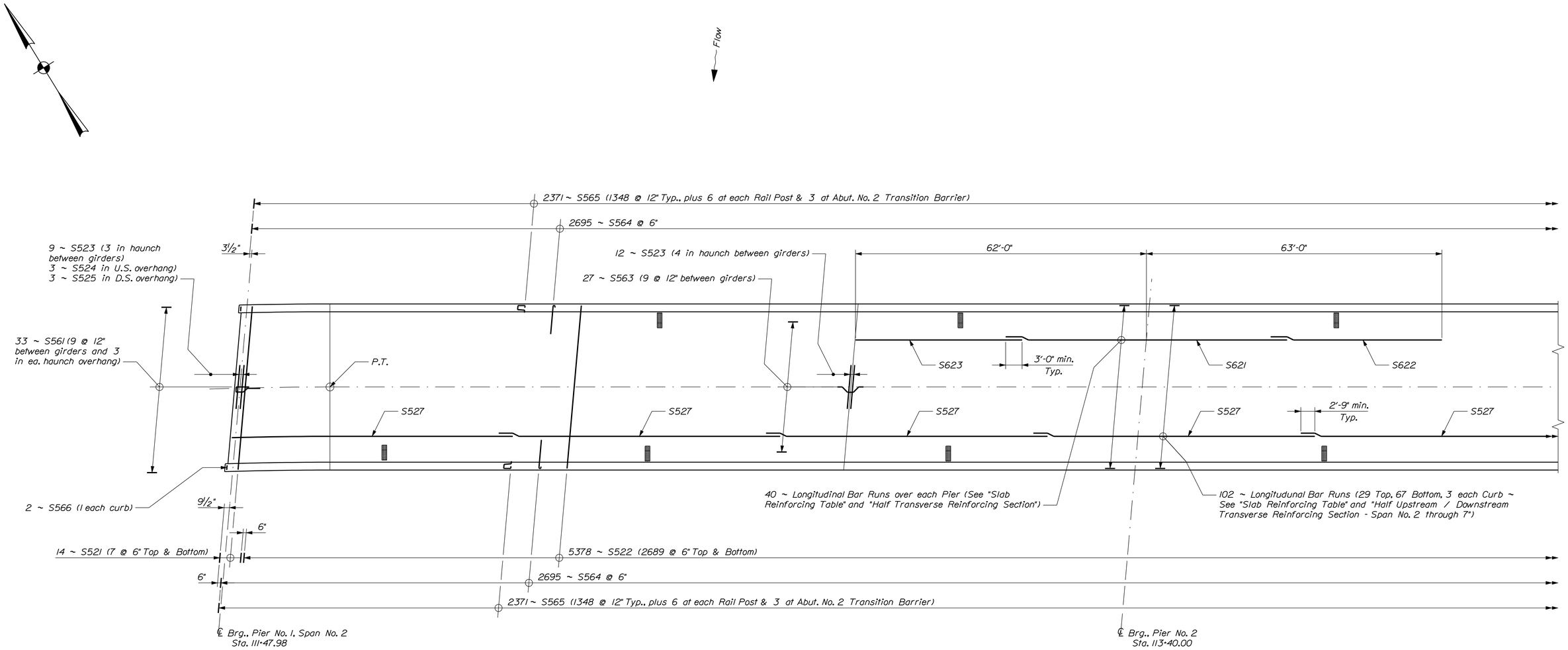

SLAB REINFORCING PLAN ~ SPAN NO. 2

SLAB REINFORCING TABLE					
Main Longitudinal Bar Runs					
Location	No. Runs	Bars	Qty. S527	Qty. S528	Qty. S529
Typical Slab	80	23 ~ S527, 1 ~ S528	1840	80	--
Slab Under Curb	8 x 2	23 ~ S527, 1 ~ S529	368	--	16
Curbs	3 x 2	23 ~ S527, 1 ~ S529	138	--	6
Total Bars			2346	80	22
Negative Moment Longitudinal Bar Runs					
Location	No. Runs	Bars	Qty. S611	Qty. S612	Qty. S613
Pier No. 2 & 6	40 x 2	1 ea. ~ S611, S612, S613	80	80	80
Pier No. 3, 4 & 5	40 x 3	1 ~ S611, 2 ~ S612	120	240	--
Total Bars			200	320	80

MAINE KENNEBEC BRIDGE
KENNEBEC RIVER
RICHMOND, SAGADAHOC CTY. DRESDEN, LINCOLN CTY.

SPRSTR. REINF. SPAN NO. 2

PROJ. MANAGER	N. Benoit	BY	DATE
DESIGN-DETAILED	D. Eaton	D. Damren	June 2012
CHECKED-REVIEWED	E. Caswell	B. Nichols	6/12 3/13
DESIGN2-DETAILED2	------	------	------
DESIGN3-DETAILED3	------	------	------
REVISIONS 1	------		------
REVISIONS 2	------		------
REVISIONS 3	------		------
REVISIONS 4	------		------
FIELD CHANGES	------		------

SIGNATURE
P.E. NUMBER
DATE

STATE OF MAINE
DEPARTMENT OF TRANSPORTATION

AC-BH-1267(400)

BRIDGE NO. 2506 | WIN 12674.00 | BRIDGE PLANS

SHEET NUMBER
175
OF 238

Filename: ...\175_Superstructure Reinforcing Span No. 2.dgn
Division: BRIDGE
Username: dana.damren
Date: 4/2/2013

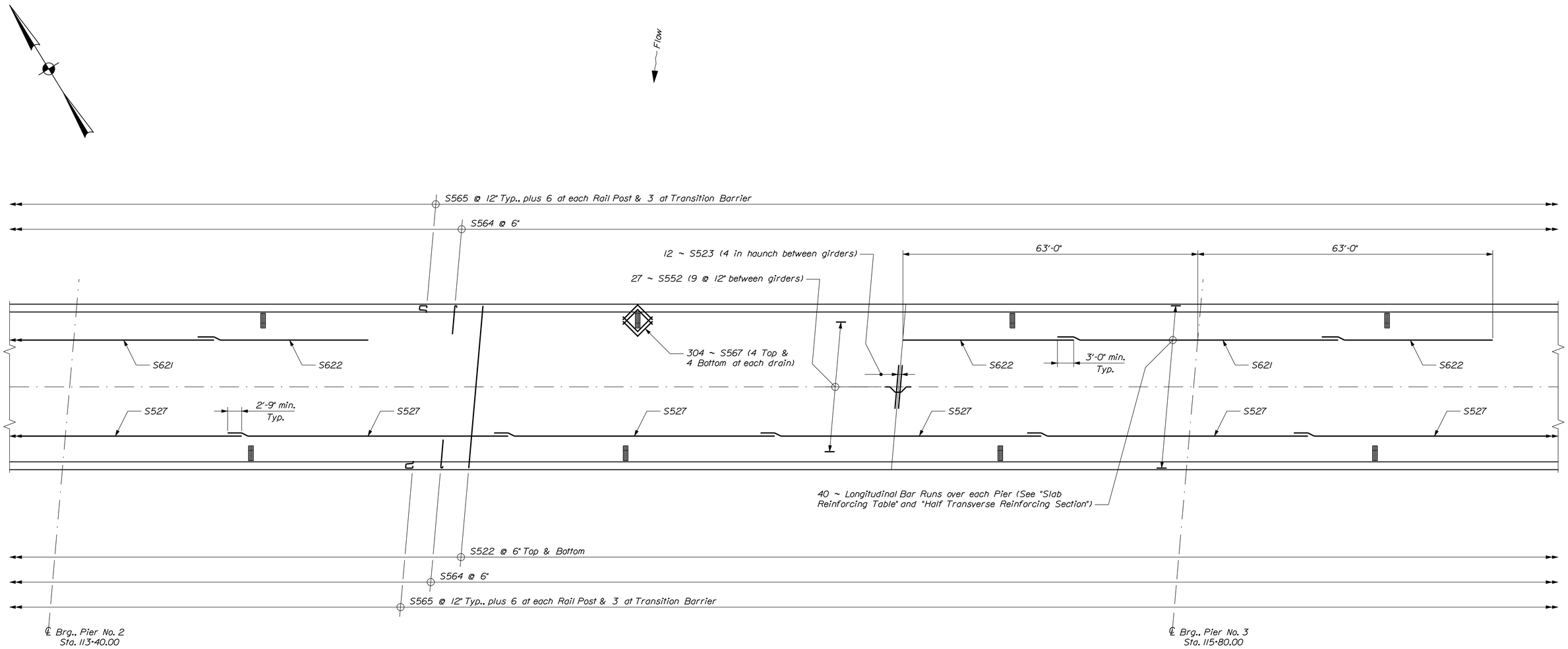

SLAB REINFORCING PLAN ~ SPAN NO. 3

Filename: ...\176_Superstructure Reinforcing Span No.3.dgn Division: BRIDGE Username: dana.damren Date:4/2/2013

MAINE KENNEBEC BRIDGE
KENNEBEC RIVER
RICHMOND, SAGADAHOC CTY. DRESDEN, LINCOLN CTY.

SPRSTR. REINF. SPAN NO. 3

PROJ. MANAGER	N. Benoit	BY	DATE
DESIGN-DETAILED	D. Eaton	D. Damren	June 2012
CHECKED-REVIEWED	E. Caswell	B. Nichols	6/12 3/13
DESIGN2-DETAILED2	------	------	------
DESIGN3-DETAILED3	------	------	------
REVISIONS 1	------		------
REVISIONS 2	------		------
REVISIONS 3	------		------
REVISIONS 4	------		------
FIELD CHANGES	------		------

SIGNATURE
P.E. NUMBER
DATE

STATE OF MAINE
DEPARTMENT OF TRANSPORTATION

AC-BH-1267(400)

BRIDGE NO. 2506 | WIN 12674.00 | BRIDGE PLANS

SHEET NUMBER
176
OF 238

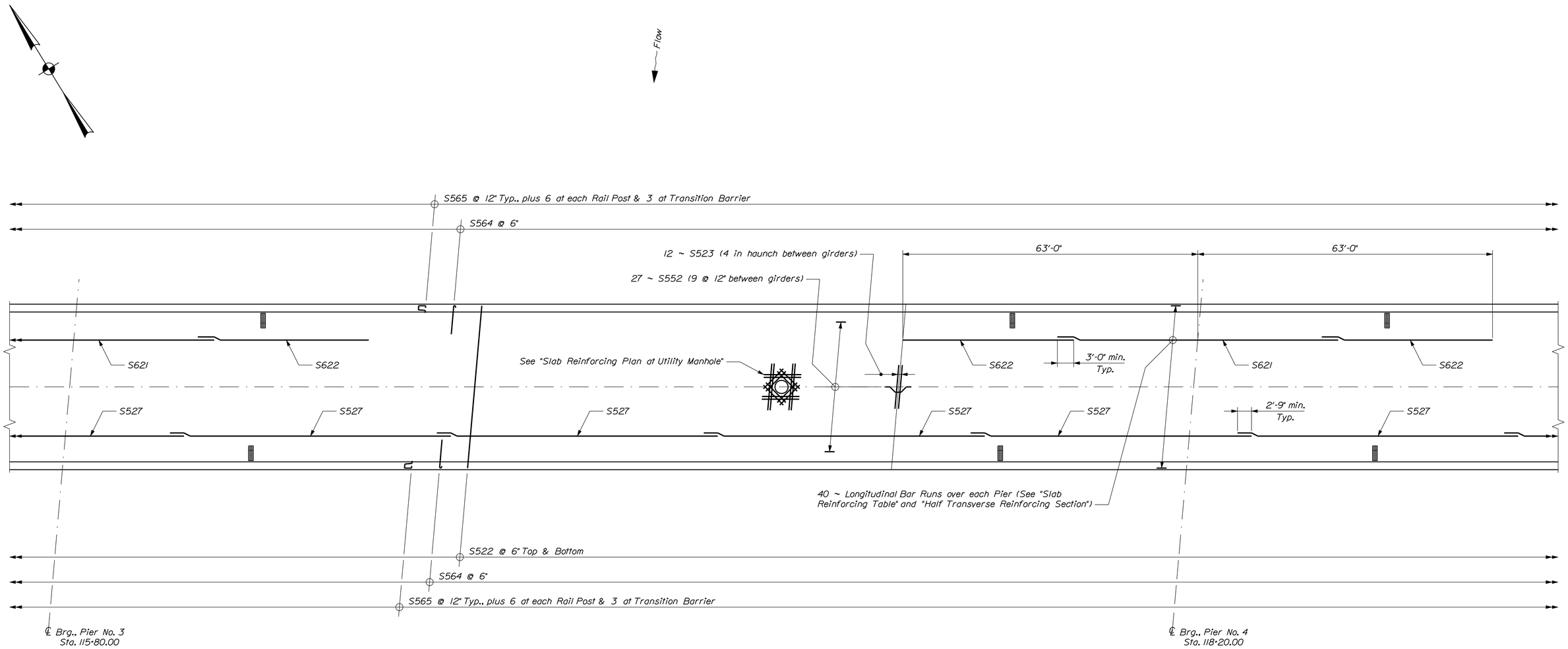

SLAB REINFORCING PLAN ~ SPAN NO. 4

Filename: ...\177_Superstructure Reinforcing Span No.4.dgn Workspace: BRIDGE Username: dana.damren Date:4/2/2013

MAINE KENNEBEC BRIDGE
KENNEBEC RIVER
RICHMOND, SAGADAHOC CTY. DRESDEN, LINCOLN CTY.

SPRSTR. REINF. SPAN NO. 4

PROJ. MANAGER	N. Benoit	BY	DATE
DESIGN-DETAILED	D. Eaton	D. Damren	June 2012
CHECKED-REVIEWED	E. Caswell	B. Nichols	6/12 3/13
DESIGN2-DETAILED2	------	------	------
DESIGN3-DETAILED3	------	------	------
REVISIONS 1	------		------
REVISIONS 2	------		------
REVISIONS 3	------		------
REVISIONS 4	------		------
FIELD CHANGES	------		------

SIGNATURE
P.E. NUMBER
DATE

STATE OF MAINE
DEPARTMENT OF TRANSPORTATION

AC-BH-1267(400)

BRIDGE NO. 2506 | WIN 12674.00 | BRIDGE PLANS

SHEET NUMBER
177
OF 238

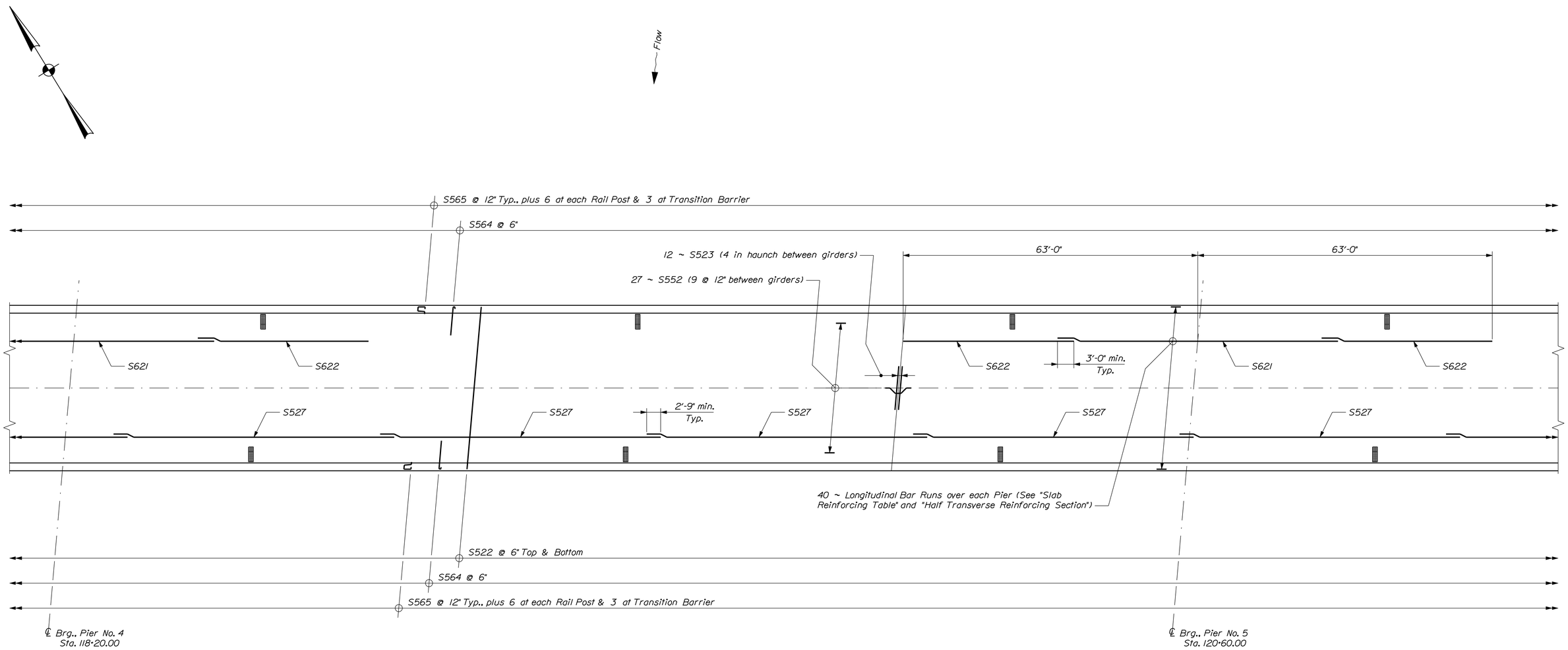

SLAB REINFORCING PLAN ~ SPAN NO. 5

Filename: ...\178_Superstructure Reinforcing Span No.5.dgn Date:4/2/2013
Username: dana.damren

MAINE KENNEBEC BRIDGE
KENNEBEC RIVER
RICHMOND, SAGADAHOC CTY. DRESDEN, LINCOLN CTY.

SPRSTR. REINF. SPAN NO. 5

PROJ. MANAGER	N. Benoit	BY	DATE
DESIGN-DETAILED	D. Eaton	D. Damren	June 2012
CHECKED-REVIEWED	E. Caswell	B. Nichols	6/12 3/13
DESIGN2-DETAILED2	------	------	------
DESIGN3-DETAILED3	------	------	------
REVISIONS 1	------		------
REVISIONS 2	------		------
REVISIONS 3	------		------
REVISIONS 4	------		------
FIELD CHANGES	------		------

SIGNATURE
P.E. NUMBER
DATE

STATE OF MAINE
DEPARTMENT OF TRANSPORTATION

AC-BH-1267(400)

BRIDGE NO. 2506 | WIN 12674.00 | BRIDGE PLANS

SHEET NUMBER
178
OF 238

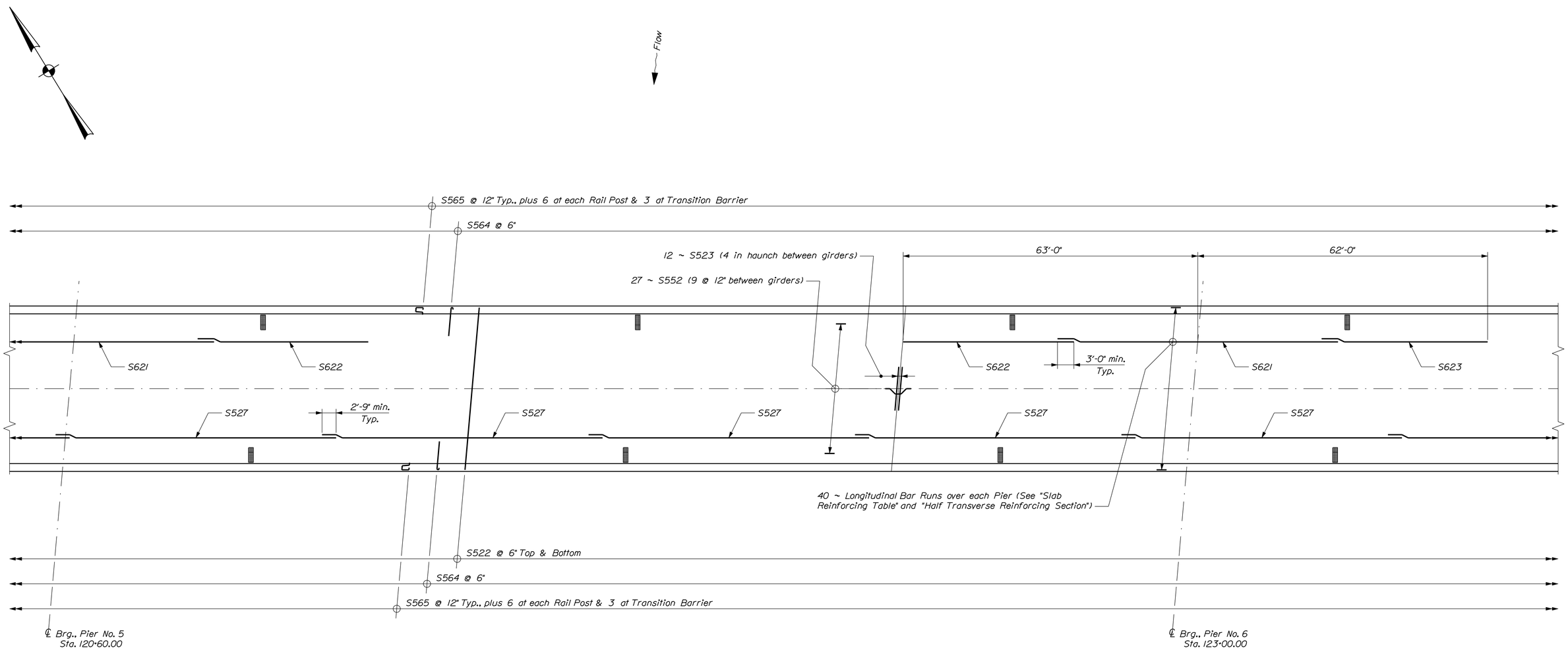

SLAB REINFORCING PLAN ~ SPAN NO. 6

Filename: ...\179_Superstructure Reinforcing Span No.6.dgn Division: BRIDGE Date:4/2/2013 Username: dana.damren

MAINE KENNEBEC BRIDGE
KENNEBEC RIVER
RICHMOND, SAGADAHOC CTY. DRESDEN, LINCOLN CTY.

SPRSTR. REINF. SPAN NO. 6

PROJ. MANAGER	N. Benoit	BY	DATE
DESIGN-DETAILED	D. Eaton	D. Damren	June 2012
CHECKED-REVIEWED	E. Caswell	B. Nichols	6/12 3/13
DESIGN2-DETAILED2	------	------	------
DESIGN3-DETAILED3	------	------	------
REVISIONS 1	------		------
REVISIONS 2	------		------
REVISIONS 3	------		------
REVISIONS 4	------		------
FIELD CHANGES	------		------

SIGNATURE
P.E. NUMBER
DATE

STATE OF MAINE
DEPARTMENT OF TRANSPORTATION

AC-BH-1267(400)

BRIDGE NO. 2506 | WIN 12674.00 | BRIDGE PLANS

SHEET NUMBER
179
OF 238

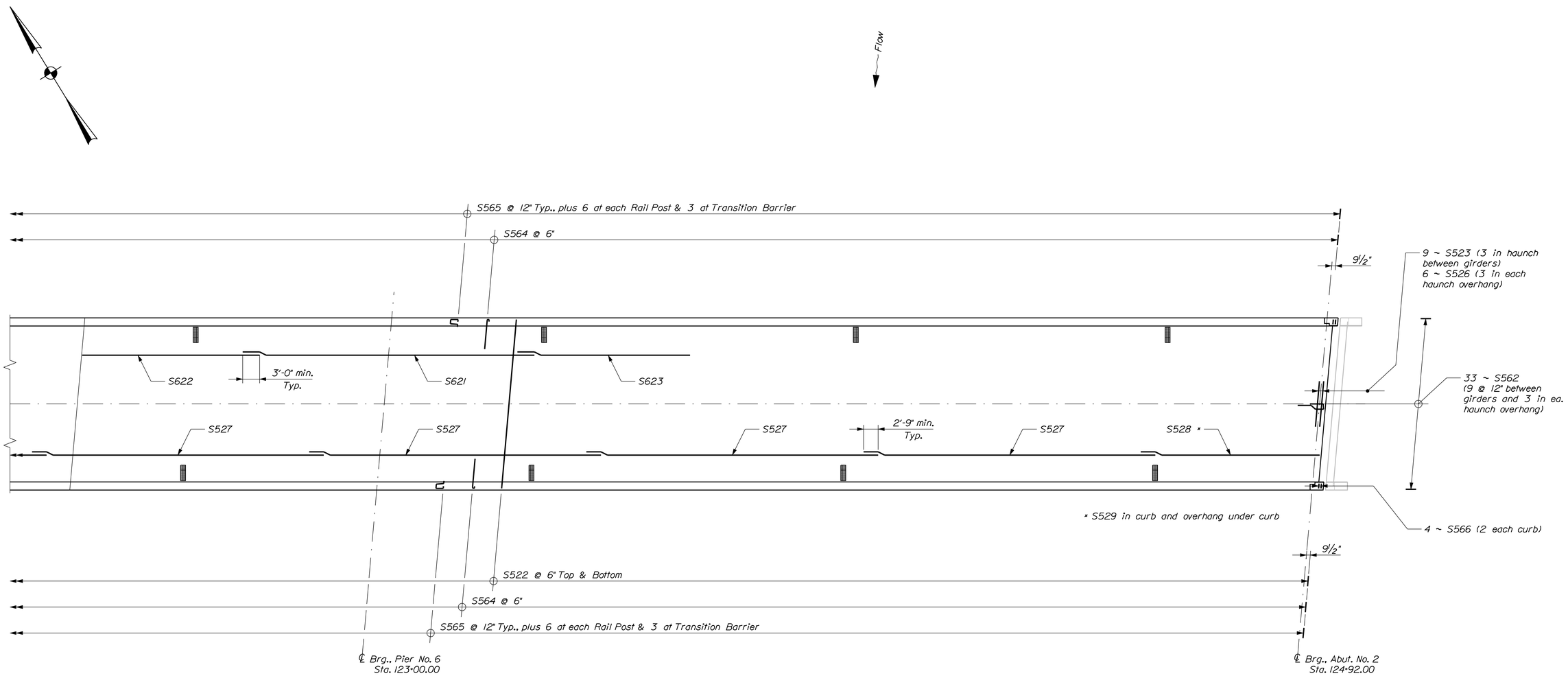

SLAB REINFORCING PLAN ~ SPAN NO. 7

Filename: ...\180_Superstructure Reinforcing Span No.7.dgn Username: dana.damren Date:4/2/2013

MAINE KENNEBEC BRIDGE KENNEBEC RIVER RICHMOND, SAGADAHOC CTY. DRESDEN, LINCOLN CTY.	PROJ. MANAGER	N. Benoit	BY	DATE	
	DESIGN-DETAILED	D. Eaton	D. Damren	June 2012	
	CHECKED-REVIEWED	E. Caswell	B. Nichols	6/12 3/13	SIGNATURE
	DESIGN2-DETAILED2	------	------	------	
	DESIGN3-DETAILED3	------	------	------	P.E. NUMBER
SPRSTR. REINF. SPAN NO. 7	REVISIONS 1	------		------	
	REVISIONS 2	------		------	
	REVISIONS 3	------		------	DATE
	REVISIONS 4	------		------	
	FIELD CHANGES	------		------	

STATE OF MAINE
DEPARTMENT OF TRANSPORTATION

AC-BH-1267(400)

BRIDGE NO. 2506 | WIN 12674.00 | BRIDGE PLANS

SHEET NUMBER 180 OF 238

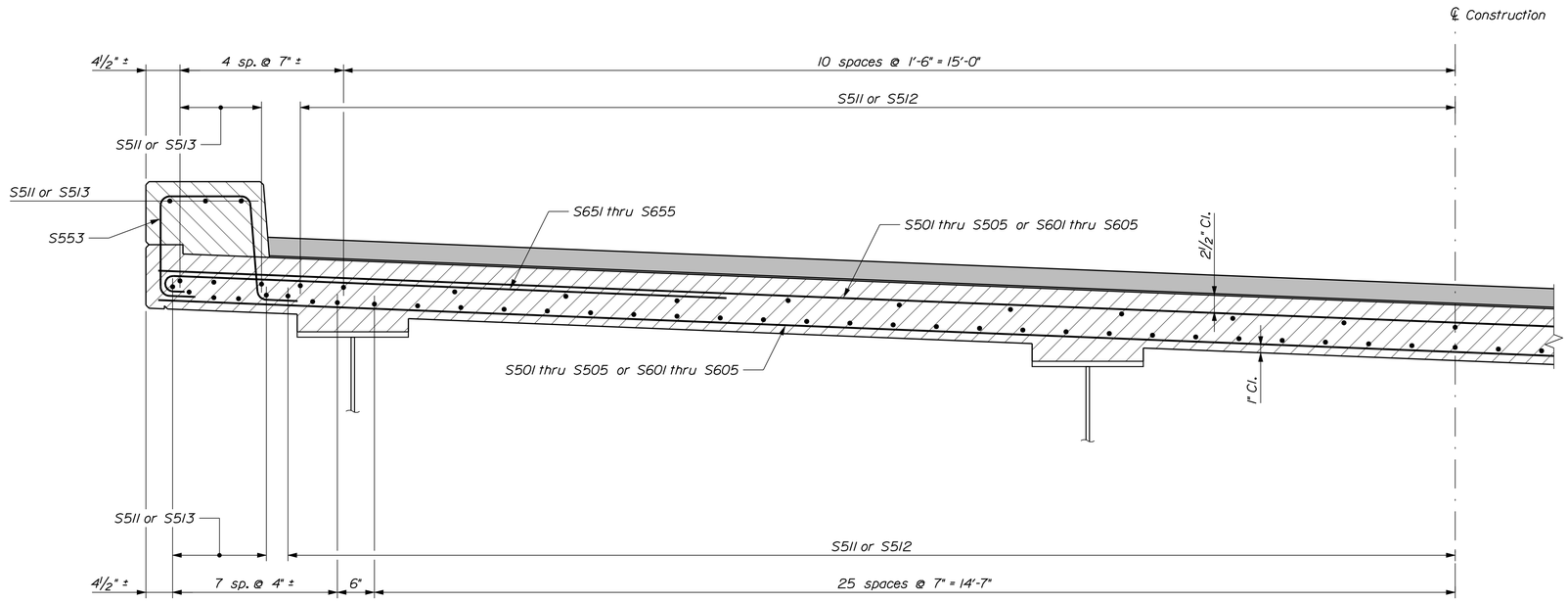

UPSTREAM HALF TRANSVERSE REINFORCING SECTION

Span No. 1

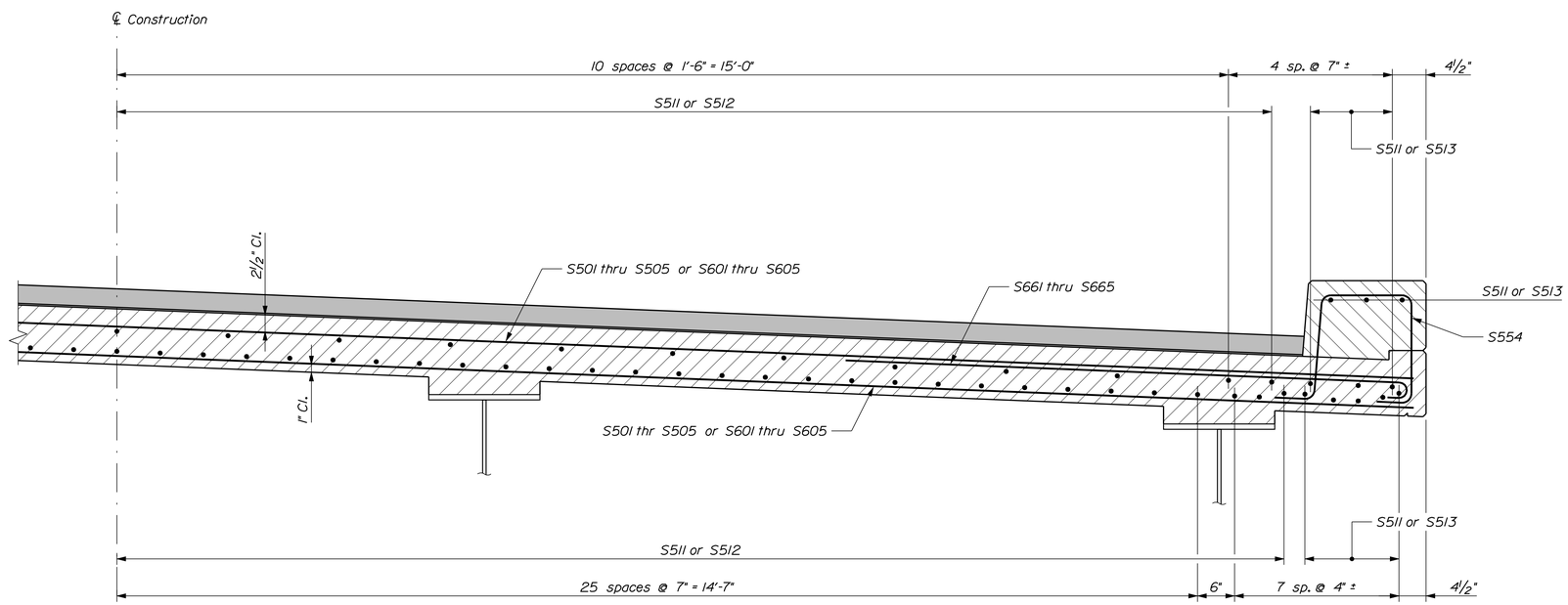

DOWNSTREAM HALF TRANSVERSE REINFORCING SECTION

Span No. 1

STATE OF MAINE
DEPARTMENT OF TRANSPORTATION

AC-BH-1267(400)

WIN 12674.00

BRIDGE NO. 2506

BRIDGE PLANS

PROJ. MANAGER	N. Benoit	BY	DATE	
DESIGN-DETAILED	B. Reeves	D. Damren	Sept. 2012	
CHECKED-REVIEWED	E. Caswell	B. Nichols	9/12/13	SIGNATURE
DESIGN2-DETAILED2	------	------	------	
DESIGN3-DETAILED3	------	------	------	P.E. NUMBER
REVISIONS 1	------	------	------	
REVISIONS 2	------	------	------	
REVISIONS 3	------	------	------	DATE
REVISIONS 4	------	------	------	
FIELD CHANGES	------	------	------	

MAINE KENNEBEC BRIDGE
KENNEBEC RIVER
RICHMOND, SAGADAHOC CTY. DRESDEN, LINCOLN CTY.

TRANSVERSE REINF. SECTION

SHEET NUMBER

181

OF 238

Filename: ...\181_Superstructure_Reinf Sections.dgn Division: BRIDGE Username: dana.damren Date:3/27/2013

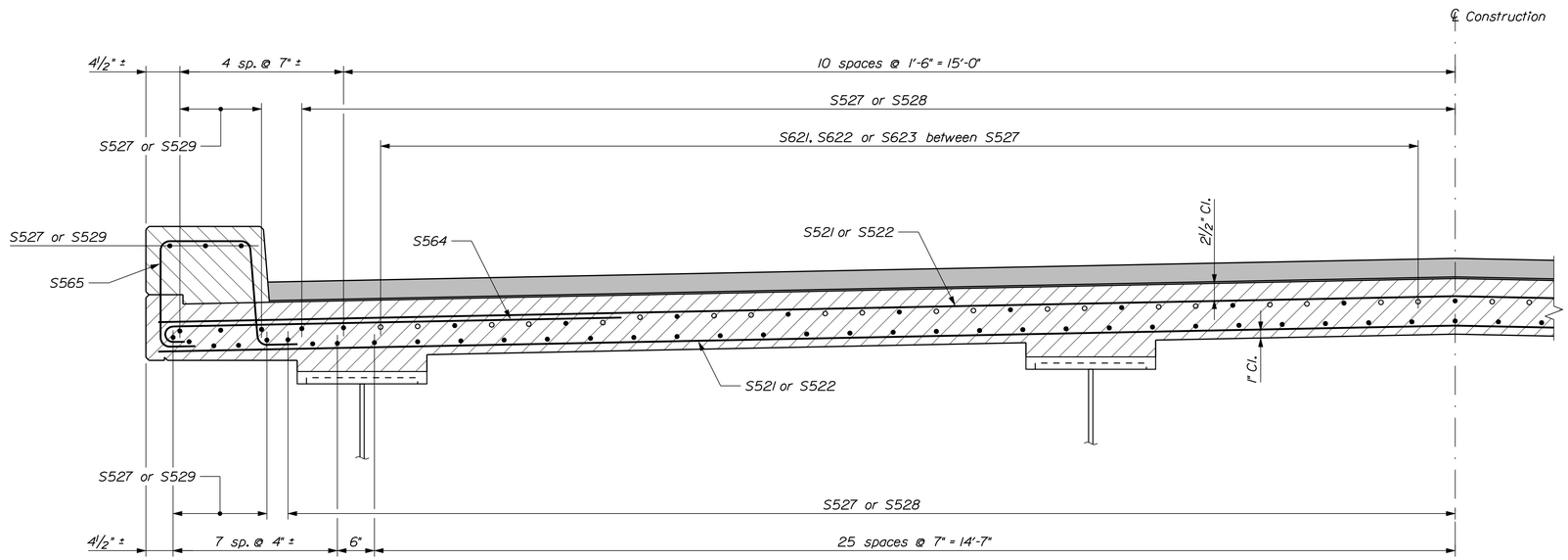

UPSTREAM HALF TRANSVERSE REINFORCING SECTION

Span No. 2 through 7

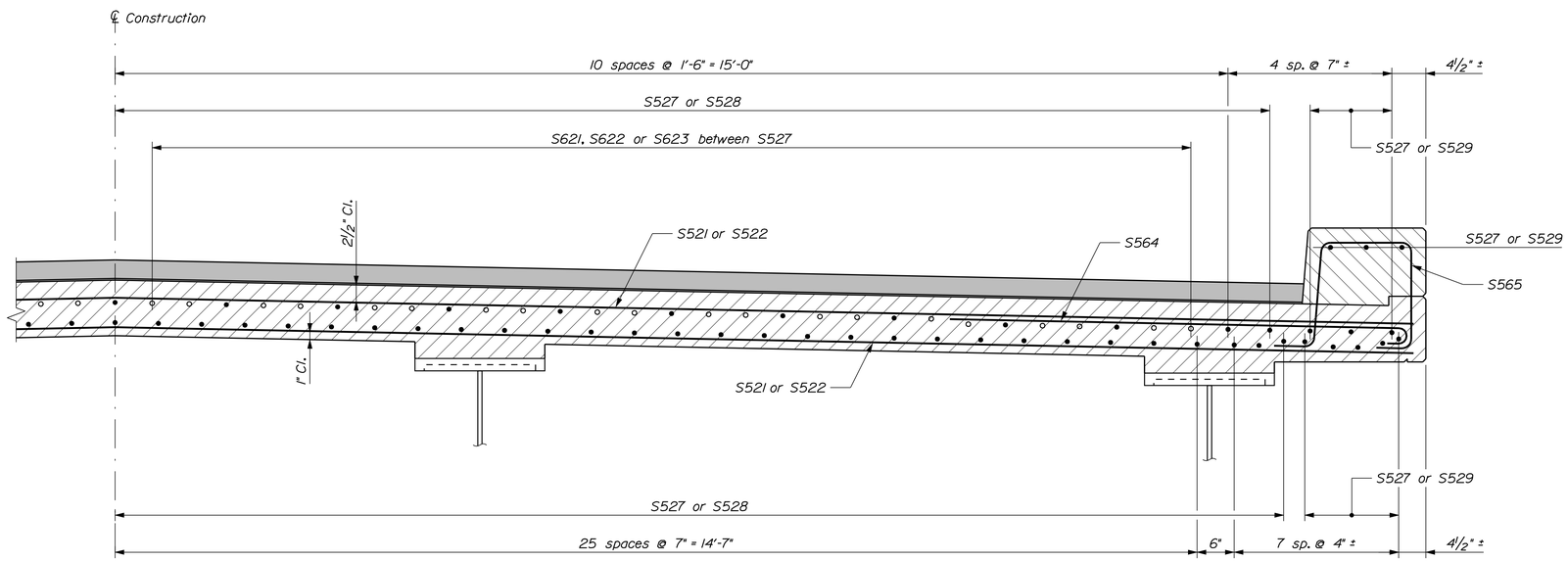

DOWNSTREAM HALF TRANSVERSE REINFORCING SECTION

Span No. 2 through 7

STATE OF MAINE
DEPARTMENT OF TRANSPORTATION

AC-BH-1267(400)

WIN 12674.00

BRIDGE NO. 2506

BRIDGE PLANS

PROJ. MANAGER	N. Benoit	BY	DATE	
DESIGN-DETAILED	D. Eaton	D. Damren	Sept. 2012	
CHECKED-REVIEWED	E. Caswell	B. Nichols	9/12/13	SIGNATURE
DESIGN2-DETAILED2	------	------	------	
DESIGN3-DETAILED3	------	------	------	P.E. NUMBER
REVISIONS 1	------	------	------	
REVISIONS 2	------	------	------	
REVISIONS 3	------	------	------	DATE
REVISIONS 4	------	------	------	
FIELD CHANGES	------	------	------	

MAINE KENNEBEC BRIDGE
KENNEBEC RIVER
RICHMOND, SAGADAHOC CTY. DRESDEN, LINCOLN CTY.

TRANSVERSE REINF. SECTION

SHEET NUMBER

182

OF 238

Filename: ...\182_Superstructure_Reinf Sections.dgnDivision: BRIDGE Username: dana.damren Date:3/27/2013

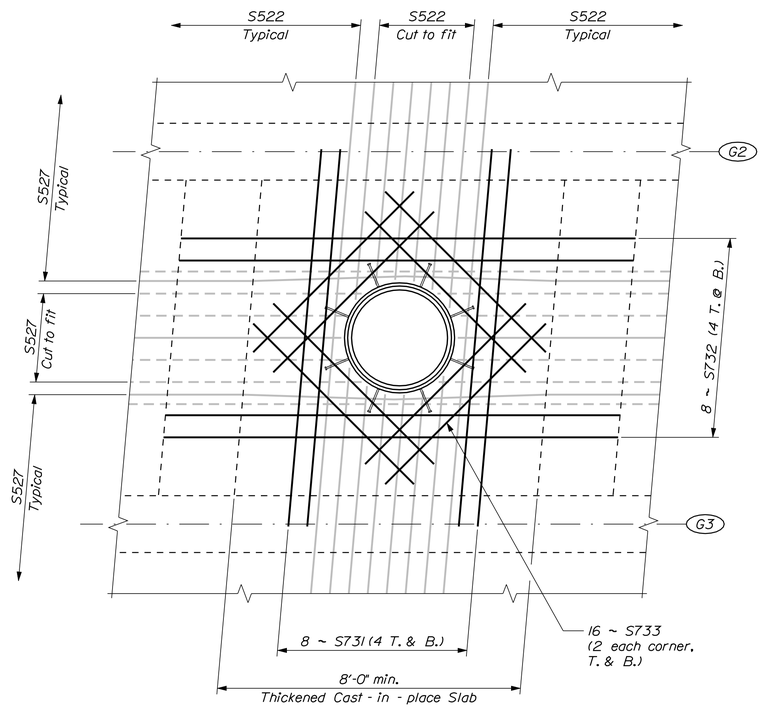

SLAB REINFORCING PLAN AT UTILITY MANHOLE

T. & B. = Top & Bottom

MANHOLE NOTES

1. All steel for the manhole frame shall meet the requirements of ASTM A 36. The manhole frame shall be galvanized after fabrication in accordance with Special Provisions Section 506.

2. The cast iron manhole cover shall be Neenah Foundry Company R-6078 or equal.

3. The cast iron manhole cover shall be furnished with a Neenah Foundry Company "T" Seal gasket or equal.

4. Fabrication of the manhole frame shall not commence until the fabricator has received the cast iron manhole cover.

5. The manhole frame and cover shall be paid for as part of Item No. 890.01, Special Work.

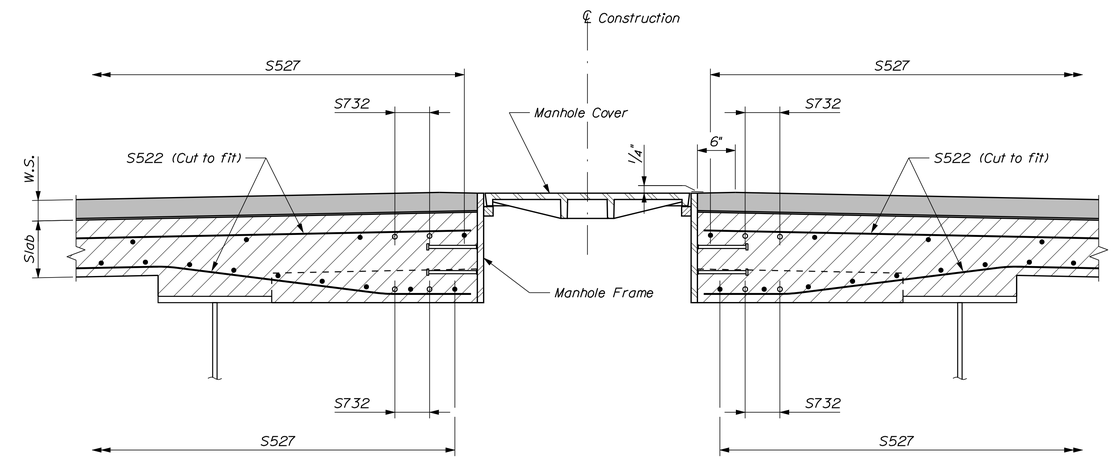

PART TRANSVERSE SECTION AT MANHOLE

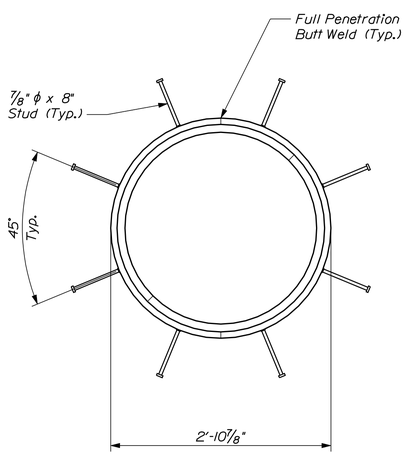

MANHOLE FRAME PLAN

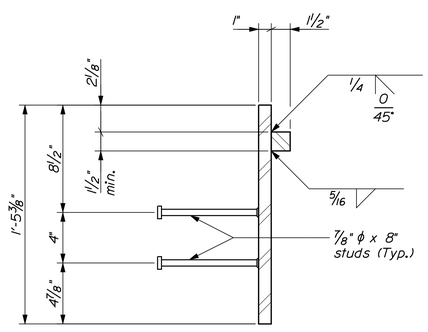

MANHOLE FRAME SECTION

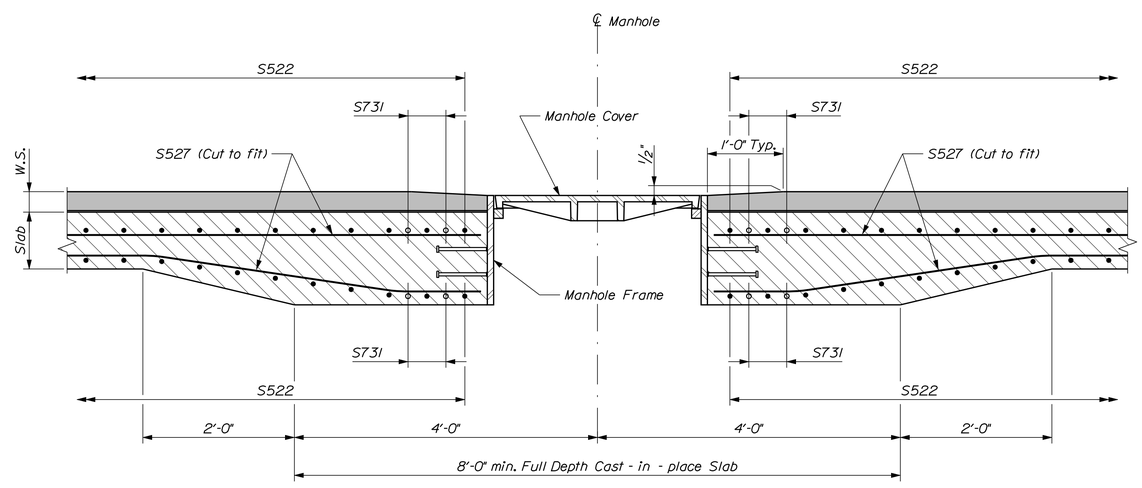

LONGITUDINAL SECTION AT MANHOLE

STATE OF MAINE
DEPARTMENT OF TRANSPORTATION

AC-BH-1267(400)

WIN 12674.00

BRIDGE NO. 2506

BRIDGE PLANS

PROJ. MANAGER	N. Benoit	BY	DATE
DESIGN-DETAILED	D. Eaton	D. Damren	Sept. 2012
CHECKED-REVIEWED	E. Caswell	------	Sept. 2012
DESIGN2-DETAILED2	------	------	------
DESIGN3-DETAILED3	------	------	------
REVISIONS 1	------	------	------
REVISIONS 2	------	------	------
REVISIONS 3	------	------	------
REVISIONS 4	------	------	------
FIELD CHANGES	------	------	------

SIGNATURE

P.E. NUMBER

DATE

MAINE KENNEBEC BRIDGE
KENNEBEC RIVER
RICHMOND, SAGADAHOC CTY. DRESDEN, LINCOLN CTY.

UTILTY MANHOLE DETAILS

SHEET NUMBER

183

OF 238

Filename: ...\MSTA\183_Manhole Details.dgn Division: BRIDGE Username: dana.damren Date:3/27/2013

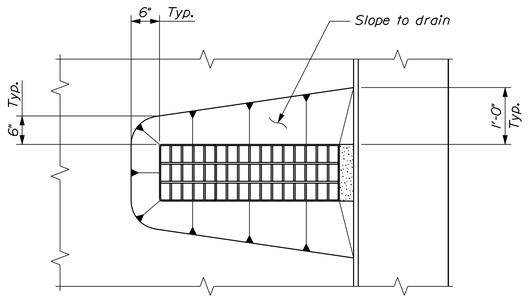

BRIDGE DRAIN PLAN

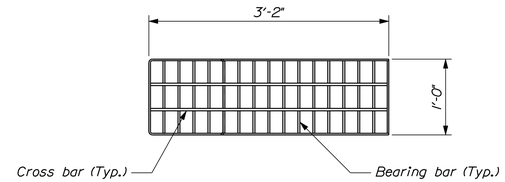

~ DRAIN TOP VIEW ~

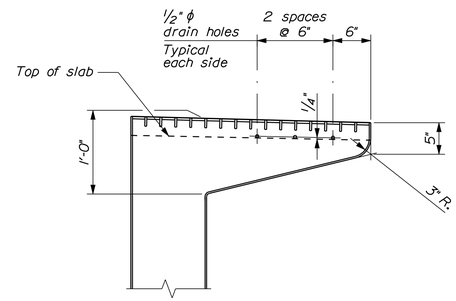

~ DRAIN SECTION ~

BRIDGE DRAIN

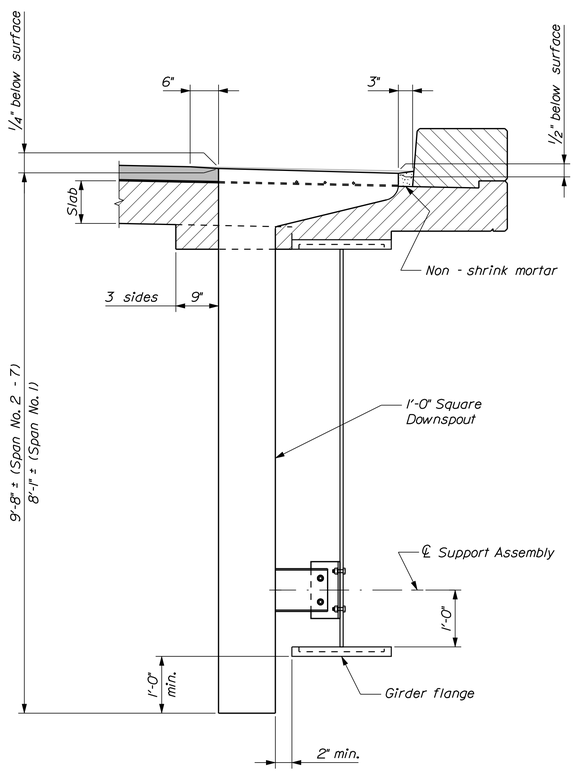

BRIDGE DRAIN ELEVATION

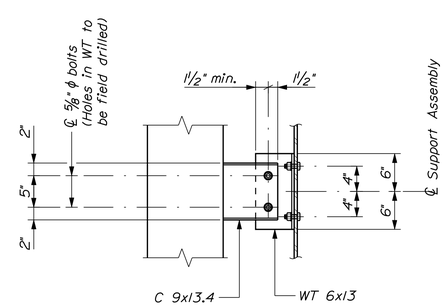

~ SUPPORT ASSEMBLY DETAIL~

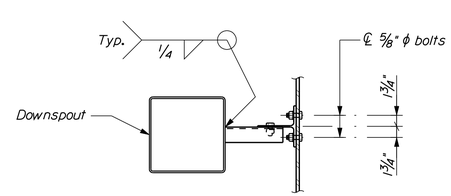

~ SUPPORT ASSEMBLY TOP VIEW ~

SUPPORT ASSEMBLY

BRIDGE DRAIN NOTES

1. FRP Bridge Drains shall be designed and detailed based on the dimensions for the bridge drain details shown, and in accordance with Special Provisions Section 502, Fiber Reinforced Polymer Bridge Drains and Downspouts.

2. Shear connectors welded to the top flange of steel beams may require adjustment to clear the bridge drains. No extra payment will be made for needed adjustments to the studs.

3. See Sheet No. 109 for Pier No. 1 downspout details.

4. See Sheet No. 191 for Abutment No. 2 downspout details.

STATE OF MAINE
DEPARTMENT OF TRANSPORTATION

AC-BH-1267(400)

WIN 12674.00

BRIDGE NO. 2506

BRIDGE PLANS

PROJ. MANAGER	N. Benoit	BY	DATE
DESIGN-DETAILED	D. Damren	D. Damren	July 2012
CHECKED-REVIEWED	D. Damren	------	------
DESIGN2-DETAILED2	------	------	------
DESIGN3-DETAILED3	------	------	------
REVISIONS 1	------	------	------
REVISIONS 2	------	------	------
REVISIONS 3	------	------	------
REVISIONS 4	------	------	------
FIELD CHANGES	------	------	------

SIGNATURE

P.E. NUMBER

DATE

MAINE KENNEBEC BRIDGE
KENNEBEC RIVER
RICHMOND, SAGADAHOC CTY. DRESDEN, LINCOLN CTY.

BRIDGE DRAINS

SHEET NUMBER

184

OF 238

Filename: ...\MSTA\184_Bridge_Drains.dgn Division: BRIDGE Username: dana.damren Date:3/27/2013

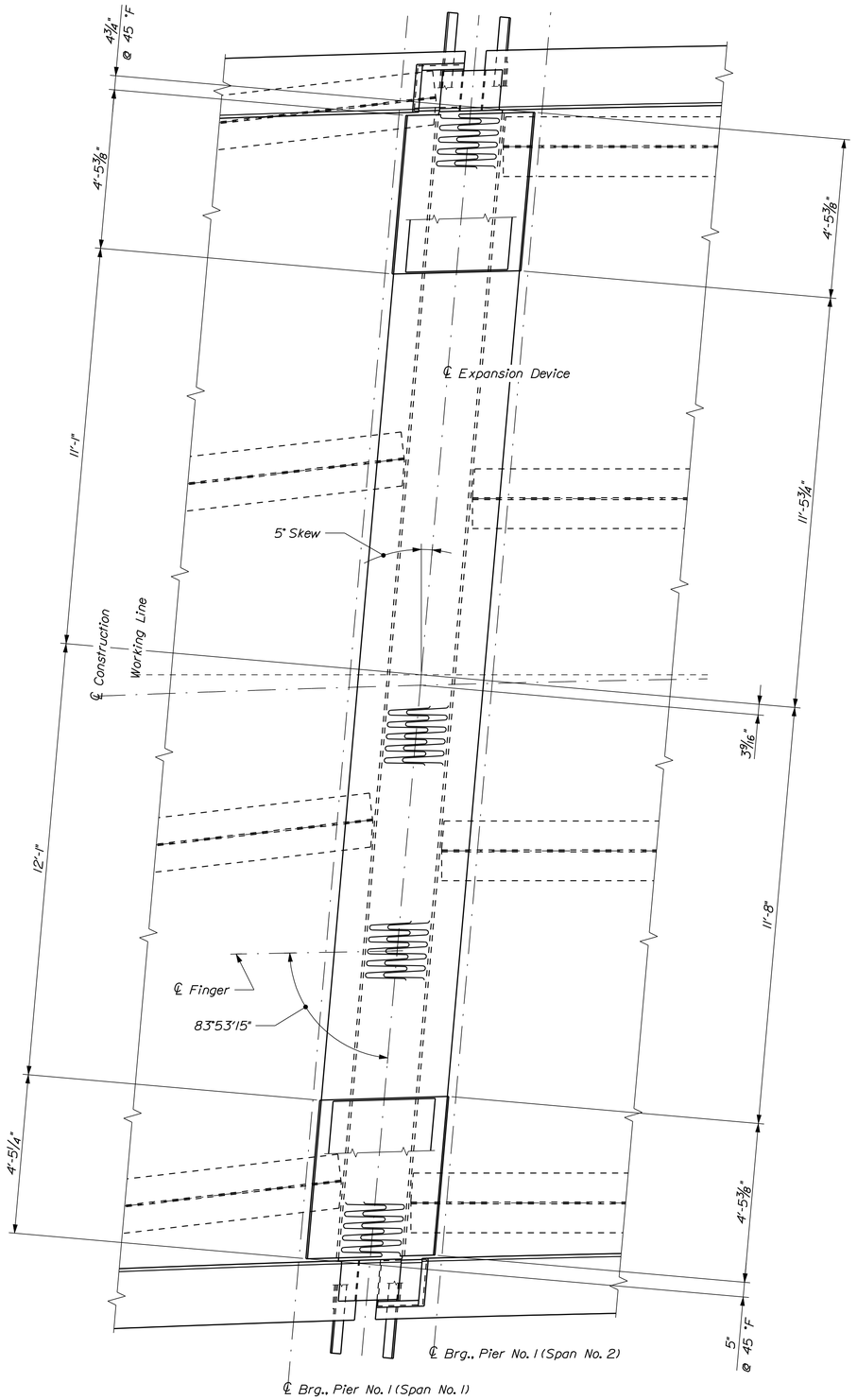

EXPANSION DEVICE PLAN ~ PIER NO. 1

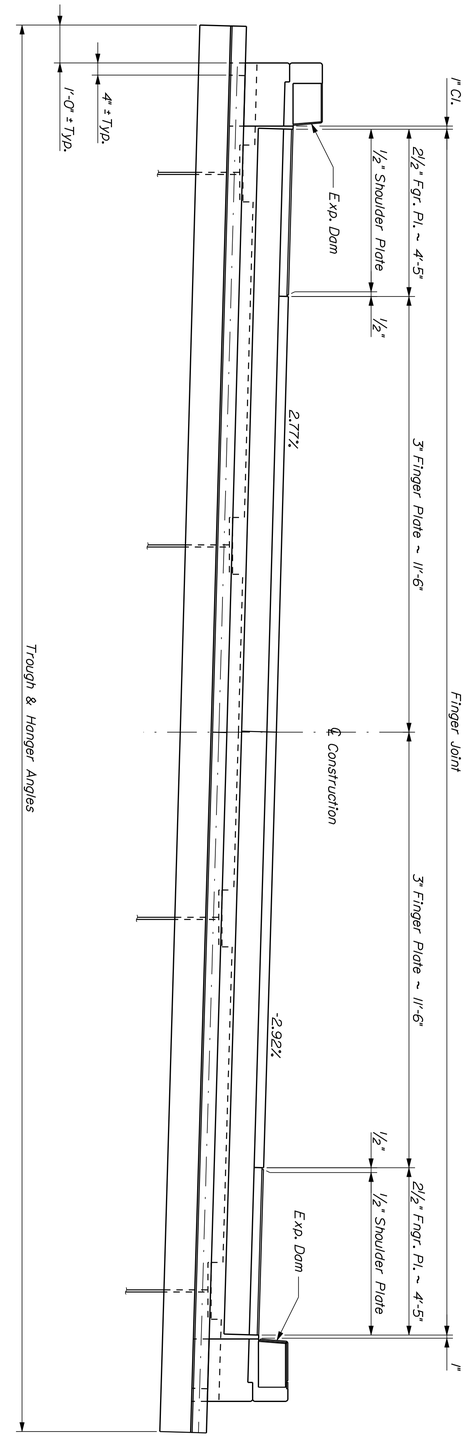

EXPANSION DEVICE ELEVATION ~ PIER NO. 1

Dimensions are Normal to ℄ Construction
Anchor Studs and Adjustment Devices not shown

EXPANSION DEVICE NOTES

1. "Expansion Device - Finger Joint (Pier No. 1)" consists of 2 Superstructure Elements with Expansion Dams and Trough as shown.

2. The Expansion Device shall be fabricated to be installed normal to grade.

4. The Expansion Device shall be installed with a joint opening as shown at 45 °F. The joint opening shall be adjusted for temperature in the field at the time of installation using the Temperature Adjustment Table. A structure temperature above 45 °F will result in a smaller joint opening.

5. After the Expansion Device is in final position, weld the plate and angle of the adjustment devices together with a ¼-in. fillet weld.

6. The slab concrete shall be in place before the Expansion Device is fixed in position. No allowance for movement due to dead load deflection is necessary.

7. The concrete in the block - out may be placed with the curb concrete. An approved epoxy bonding agent shall be applied to all vertical surfaces of the block - out before making the final concrete placement.

MATERIALS

All shapes and plates.....AASHTO M 270M/M 270, Grade 36

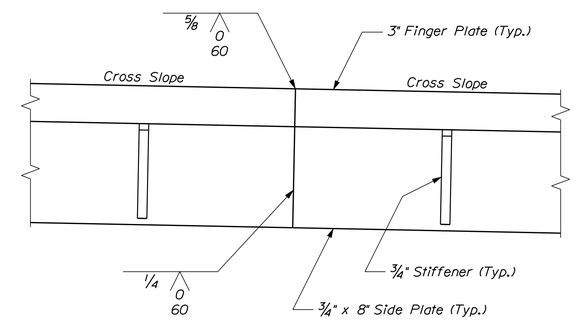

PART FINGER JOINT ELEVATION

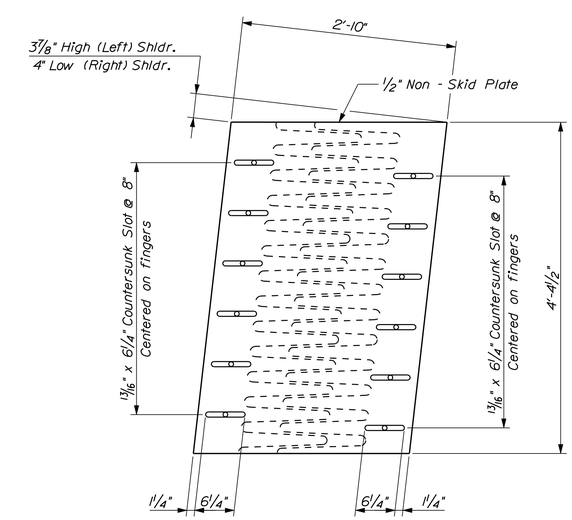

TYPICAL SHOULDER PLATE PLAN

STATE OF MAINE
DEPARTMENT OF TRANSPORTATION

AC-BH-1267(400)

WIN 12674.00

BRIDGE NO. 2506

BRIDGE PLANS

PROJ. MANAGER	N. Benoit	BY	DATE
DESIGN-DETAILED	D. Damren	D. Damren	Oct. 2012
CHECKED-REVIEWED	------	------	------
DESIGN2-DETAILED2	------	------	------
DESIGN3-DETAILED3	------	------	------
REVISIONS 1	------	------	------
REVISIONS 2	------	------	------
REVISIONS 3	------	------	------
REVISIONS 4	------	------	------
FIELD CHANGES	------	------	------

SIGNATURE

P.E. NUMBER

DATE

MAINE KENNEBEC BRIDGE
KENNEBEC RIVER
RICHMOND, SAGADAHOC CTY. DRESDEN, LINCOLN CTY.

PIER NO. 1 EXPANSION DEVICE

SHEET NUMBER
185
OF 238

Filename: ...\185_Pier No. 1 Finger Joint.dgn Division: BRIDGE Username: dana.damren Date:3/27/2013

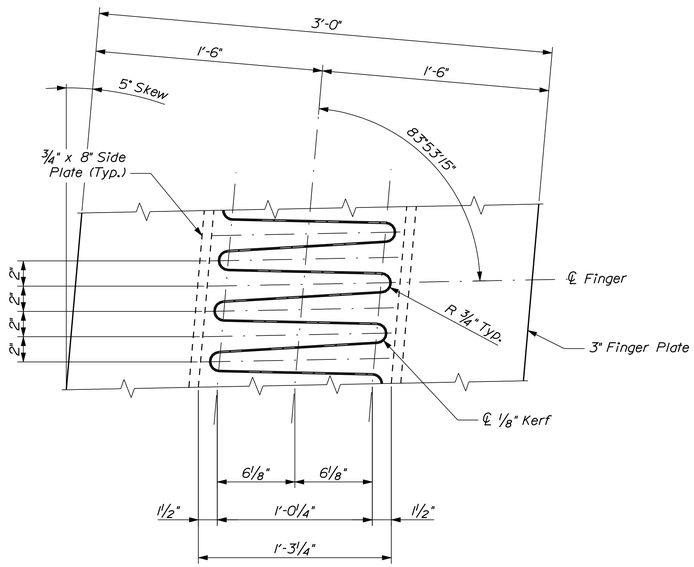

FINGER CUTTING DETAIL ~ PIER NO. 1

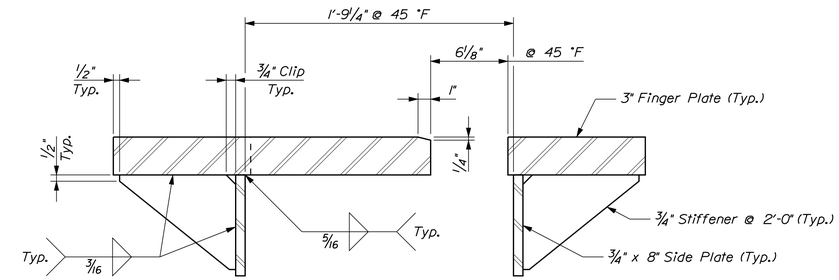

TYPICAL FINGER JOINT SECTION ~ PIER NO. 1

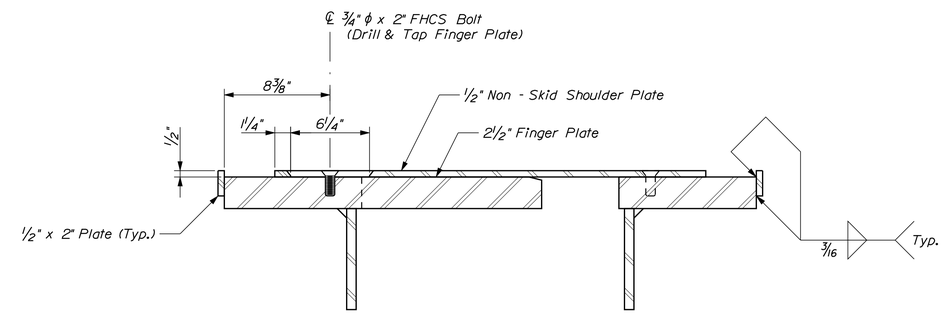

SHOULDER PLATE SECTION ~ PIER NO. 1

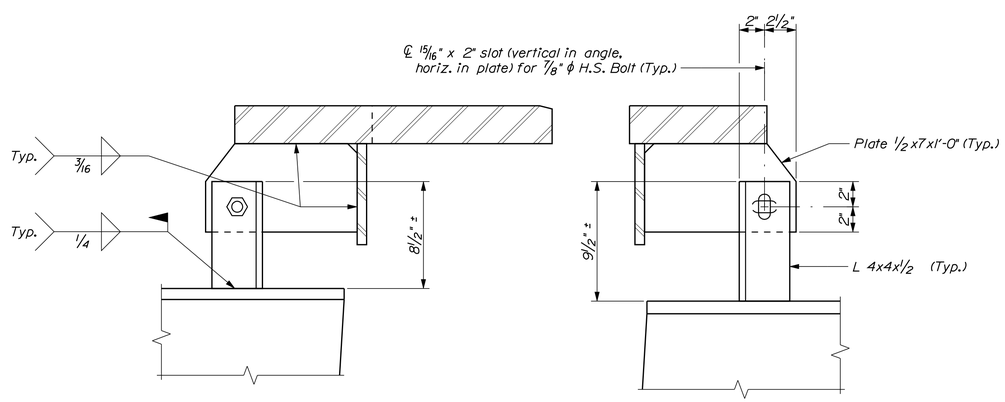

FINGER JOINT ADJUSTMENT DEVICE ~ PIER NO. 1

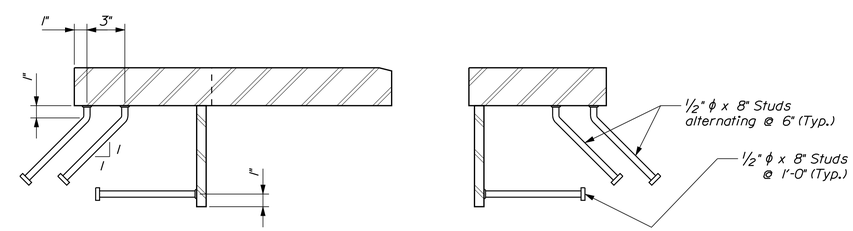

FINGER JOINT ANCHORAGE SECTION ~ PIER NO. 1

TEMPERATURE ADJUSTMENT TABLE ~ PIER NO. 1											
Joint Opening	-30 °F	-15 °F	0 °F	15 °F	30 °F	45 °F	60 °F	75 °F	90 °F	105 °F	120 °F
Finger Joint	11 1/8"	10 1/8"	9 1/8"	8 1/8"	7 1/8"	6 1/8"	5 1/8"	4 1/8"	3 1/8"	2 1/8"	1 1/8"
Expansion Dam	12"	11"	10"	9"	8"	7"	6"	5"	4"	3"	2"

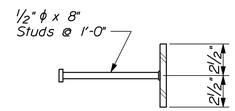

TROUGH PLATE ANCHORAGE SECTION

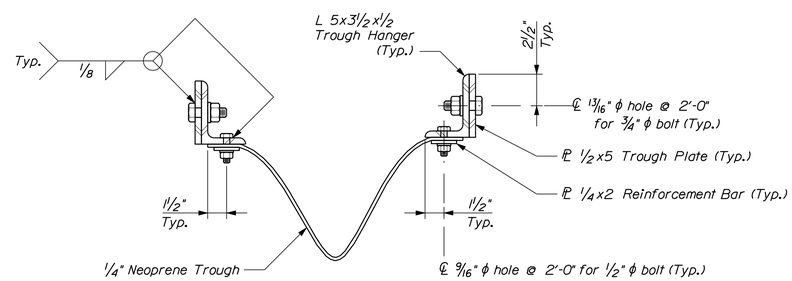

TROUGH SECTION ~ PIER NO. 1

STATE OF MAINE
DEPARTMENT OF TRANSPORTATION

AC-BH-1267(400)

WIN 12674.00

BRIDGE NO. 2506

BRIDGE PLANS

		BY	DATE
PROJ. MANAGER	N. Benoit		
DESIGN-DETAILED	D. Damren	D. Damren	Oct. 2012
CHECKED-REVIEWED	------	------	------
DESIGN2-DETAILED2	------	------	------
DESIGN3-DETAILED3	------	------	------
REVISIONS 1	------	------	------
REVISIONS 2	------	------	------
REVISIONS 3	------	------	------
REVISIONS 4	------	------	------
FIELD CHANGES	------	------	------

SIGNATURE

P.E. NUMBER

DATE

MAINE KENNEBEC BRIDGE
KENNEBEC RIVER
RICHMOND, SAGADAHOC CTY. DRESDEN, LINCOLN CTY.

PIER NO. 1 EXPANSION DEVICE

SHEET NUMBER
186
OF 238

Filename: ...\186_Pier No. 1 Finger Joint.dgn Division: BRIDGE Username: dana.damren Date:3/27/2013

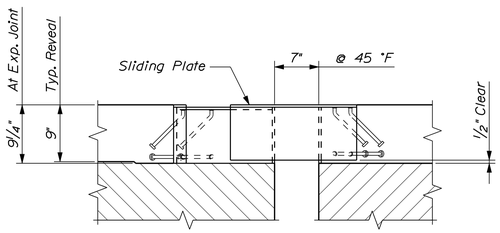

EXPANSION DAM ELEVATION
Northwest Exp. Dam shown; Southwest Exp. Dam similar

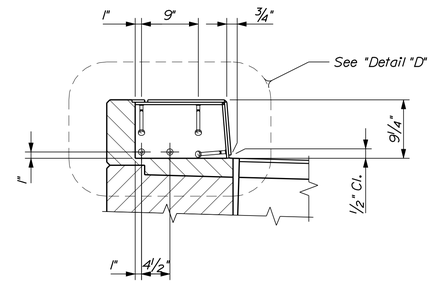

SECTION D - D

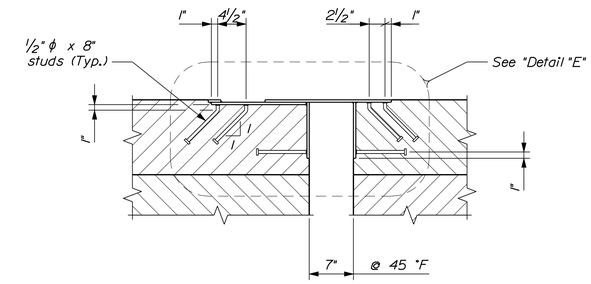

SECTION E - E

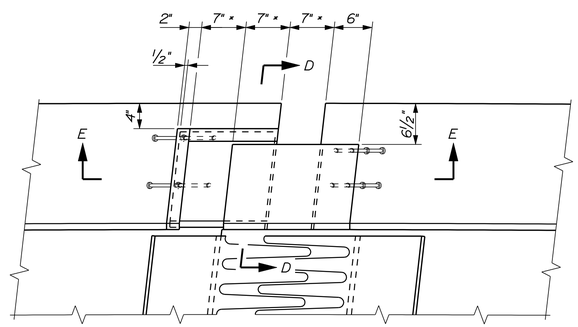

NORTHWEST EXPANSION DAM PLAN
* Dimension @ 45 °F

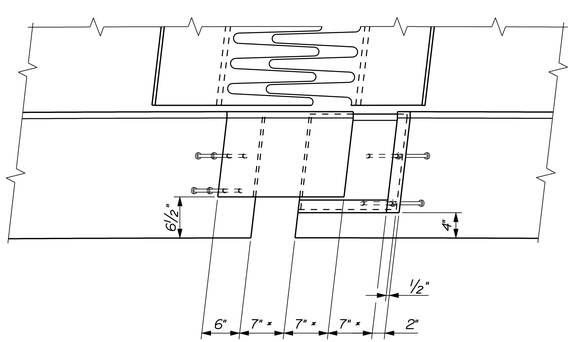

SOUTHWEST EXPANSION DAM PLAN
* Dimension @ 45 °F

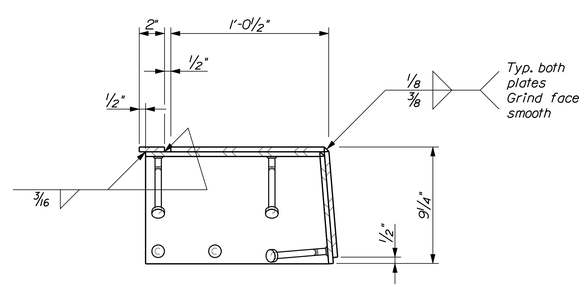

DETAIL "D"
All plates ⅜" thick

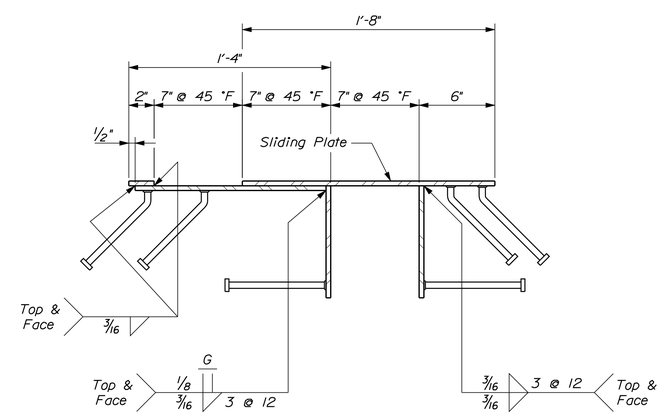

DETAIL "E"
All plates ⅜" thick

STATE OF MAINE
DEPARTMENT OF TRANSPORTATION

AC-BH-1267(400)

WIN 12674.00

BRIDGE NO. 2506

BRIDGE PLANS

		BY	DATE
PROJ. MANAGER	N. Benoit		
DESIGN-DETAILED	D. Damren	D. Damren	Aug. 2012
CHECKED-REVIEWED	------	------	------
DESIGN2-DETAILED2	------	------	------
DESIGN3-DETAILED3	------	------	------
REVISIONS 1	------		
REVISIONS 2	------		
REVISIONS 3	------		
REVISIONS 4	------		
FIELD CHANGES	------		

SIGNATURE

P.E. NUMBER

DATE

MAINE KENNEBEC BRIDGE
KENNEBEC RIVER
RICHMOND, SAGADAHOC CTY. DRESDEN, LINCOLN CTY.

PIER NO. 1 EXPANSION DAMS

SHEET NUMBER

187

OF 238

Filename: ...\187_Pier No.1 Expansion Dams.dgn Division: BRIDGE Username: dana.damren Date:3/27/2013

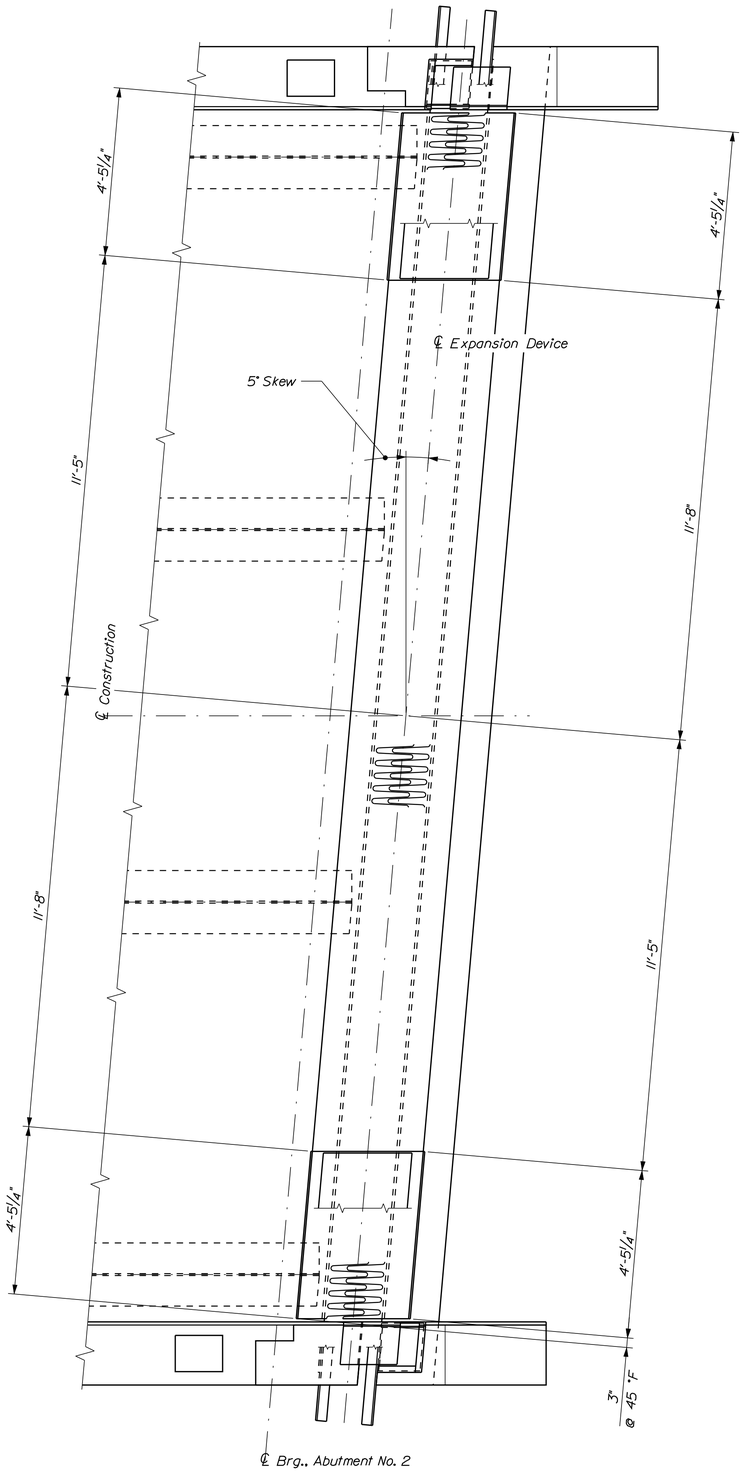

EXPANSION DEVICE PLAN ~ ABUTMENT NO. 2

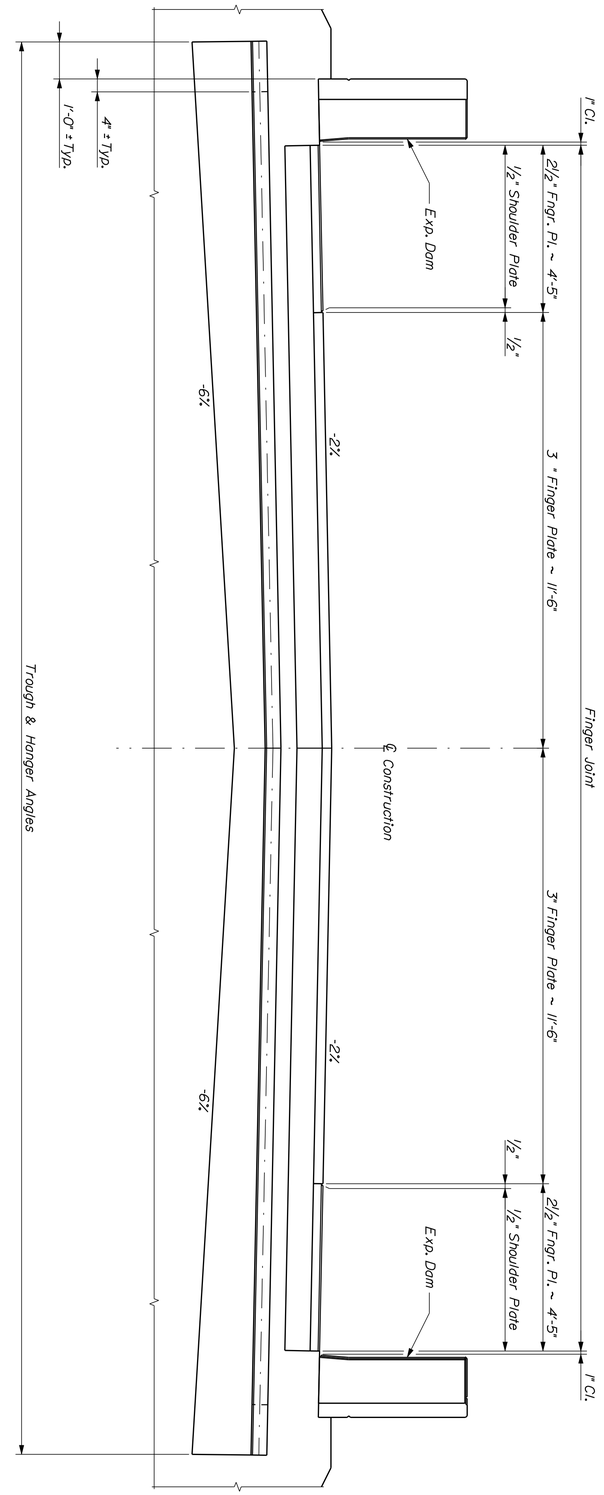

EXPANSION DEVICE ELEVATION ~ ABUTMENT NO. 2

Dimensions are Normal to ℄ Construction
Anchor Studs and Adjustment Devices not shown

EXPANSION DEVICE NOTES

1. "Expansion Device - Finger Joint (Abutment No. 2)" consists of one Backwall Element and one Superstructure Element with Expansion Dams and Trough as shown.

2. The Expansion Device shall be fabricated to be installed normal to grade.

4. The Expansion Device shall be installed with a joint opening as shown at 45 °F. The joint opening shall be adjusted for temperature in the field at the time of installation using the Temperature Adjustment Table. A structure temperature above 45 °F will result in a smaller joint opening.

5. After the Expansion Device is in final position, weld the plate and angle of the adjustment devices together with a ¼-in. fillet weld.

6. The slab concrete shall be in place before the Expansion Device is fixed in position. No allowance for movement due to dead load deflection is necessary.

7. The concrete in the block - out may be placed with the curb concrete. An approved epoxy bonding agent shall be applied to all vertical surfaces of the block - out before making the final concrete placement.

MATERIALS

All shapes and plates.....AASHTO M 270M/M 270, Grade 36

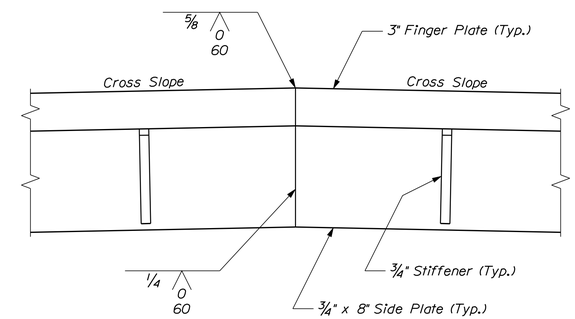

PART FINGER JOINT ELEVATION

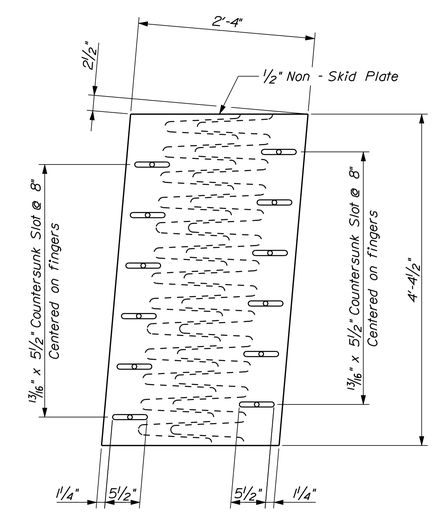

TYPICAL SHOULDER PLATE PLAN

STATE OF MAINE
DEPARTMENT OF TRANSPORTATION

AC-BH-1267(400)

WIN 12674.00

BRIDGE NO. 2506

BRIDGE PLANS

		BY	DATE
PROJ. MANAGER	N. Benoit		
DESIGN-DETAILED	D. Damren	D. Damren	Oct. 2012
CHECKED-REVIEWED	------	------	------
DESIGN2-DETAILED2	------	------	------
DESIGN3-DETAILED3	------	------	------
REVISIONS 1	------	------	------
REVISIONS 2	------	------	------
REVISIONS 3	------	------	------
REVISIONS 4	------	------	------
FIELD CHANGES	------	------	------

SIGNATURE

P.E. NUMBER

DATE

MAINE KENNEBEC BRIDGE
KENNEBEC RIVER
RICHMOND, SAGADAHOC CTY. DRESDEN, LINCOLN CTY.

ABUT. NO. 2 EXPANSION DEVICE

SHEET NUMBER

188

OF 238

Filename: ...\188_Abut. No. 2 Finger Joint.dgn Division: BRIDGE Username: dana.damren Date:3/27/2013

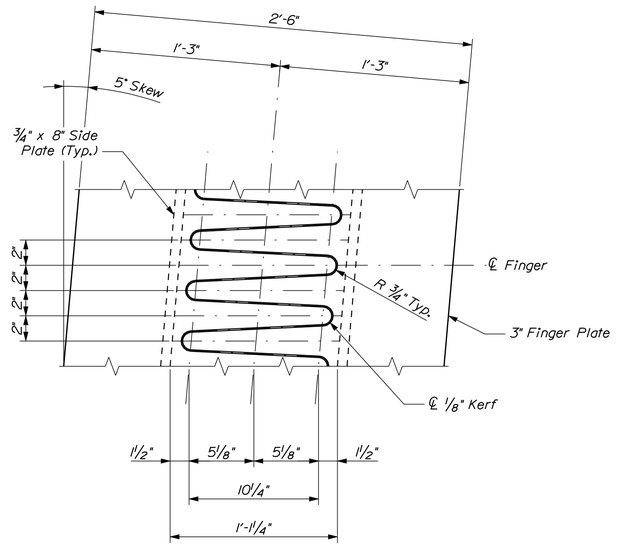

FINGER CUTTING DETAIL ~ ABUTMENT NO. 2

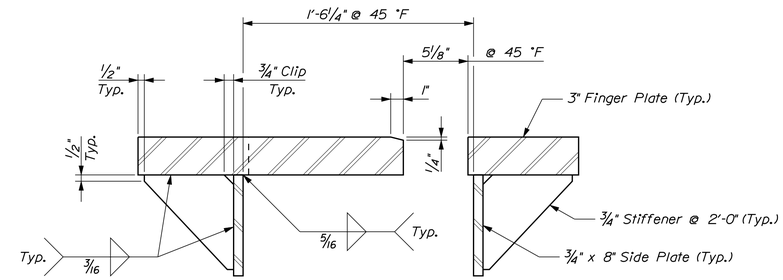

TYPICAL FINGER JOINT SECTION ~ ABUTMENT NO. 2

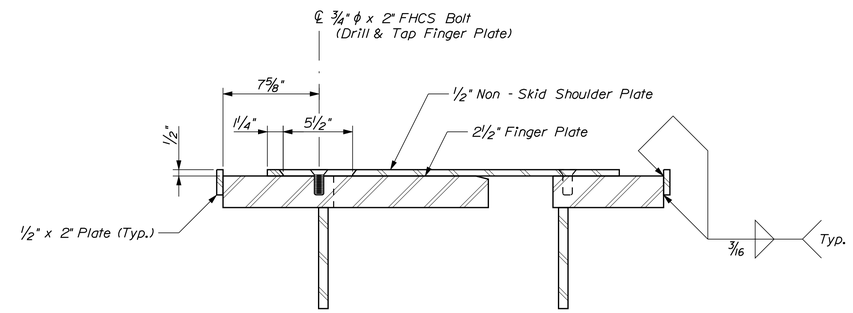

SHOULDER PLATE SECTION ~ ABUTMENT NO. 2

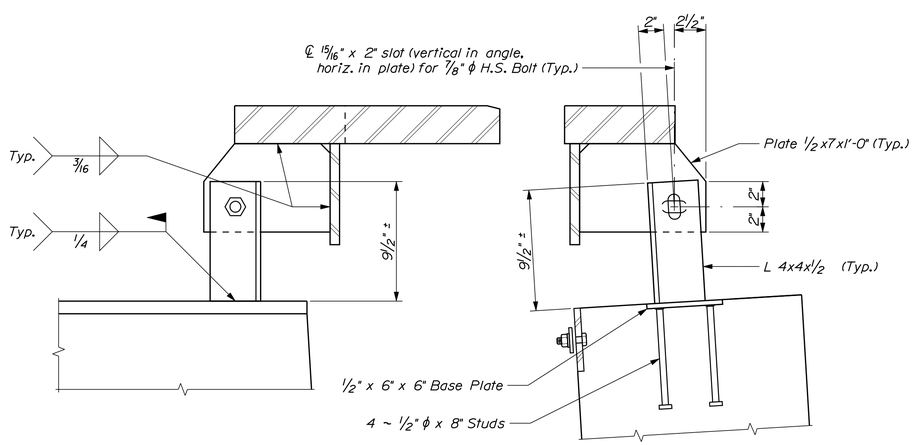

FINGER JOINT ADJUSTMENT DEVICE ~ ABUTMENT NO. 2

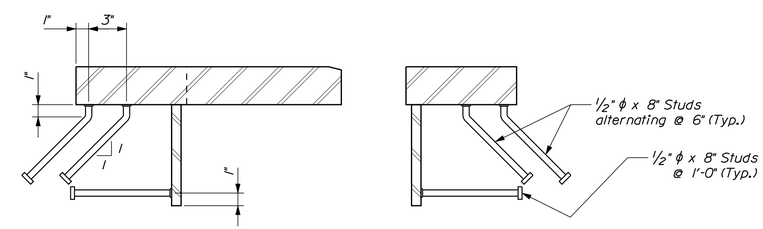

FINGER JOINT ANCHORAGE SECTION ~ ABUTMENT NO. 2

TEMPERATURE ADJUSTMENT TABLE ~ ABUTMENT NO. 2											
Joint Opening	-30 °F	-15 °F	0 °F	15 °F	30 °F	45 °F	60 °F	75 °F	90 °F	105 °F	120 °F
Finger Joint	8 3/4"	8"	7 1/4"	6 1/2"	5 7/8"	5 1/8"	4 3/8"	3 3/4"	3"	2 1/4"	1 1/2"
Expansion Dam	9 5/8"	8 7/8"	8 1/8"	7 3/8"	6 3/4"	6"	5 1/4"	4 5/8"	3 7/8"	3 1/8"	2 3/8"

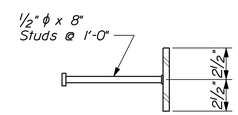

TROUGH PLATE ANCHORAGE SECTION

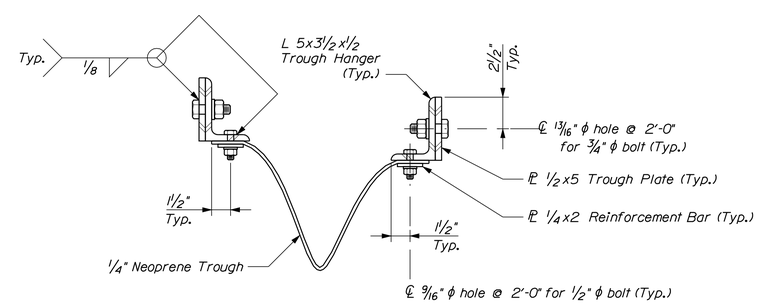

TROUGH SECTION ~ ABUTMENT NO. 2

STATE OF MAINE
DEPARTMENT OF TRANSPORTATION

AC-BH-1267(400)

WIN 12674.00

BRIDGE NO. 2506

BRIDGE PLANS

			DATE
PROJ. MANAGER	N. Benoit	BY	DATE
DESIGN-DETAILED	D. Damren	D. Damren	Oct. 2012
CHECKED-REVIEWED	------	------	------
DESIGN2-DETAILED2	------	------	------
DESIGN3-DETAILED3	------	------	------
REVISIONS 1	------	------	------
REVISIONS 2	------	------	------
REVISIONS 3	------	------	------
REVISIONS 4	------	------	------
FIELD CHANGES	------	------	------

SIGNATURE

P.E. NUMBER

DATE

MAINE KENNEBEC BRIDGE
KENNEBEC RIVER
RICHMOND, SAGADAHOC CTY. DRESDEN, LINCOLN CTY.

ABUT. NO. 2 EXPANSION DEVICE

SHEET NUMBER

189

OF 238

Filename: ...\189_Abut. No. 2 Finger Joint.dgn Division: BRIDGE Username: dana.damren Date:3/27/2013

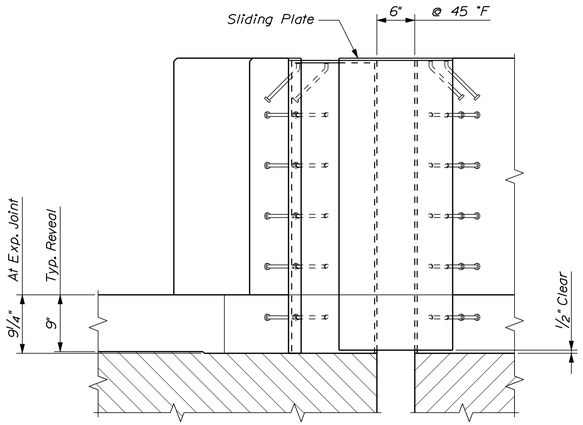

EXPANSION DAM ELEVATION
Northeast Exp. Dam shown; Southeast Exp. Dam similar

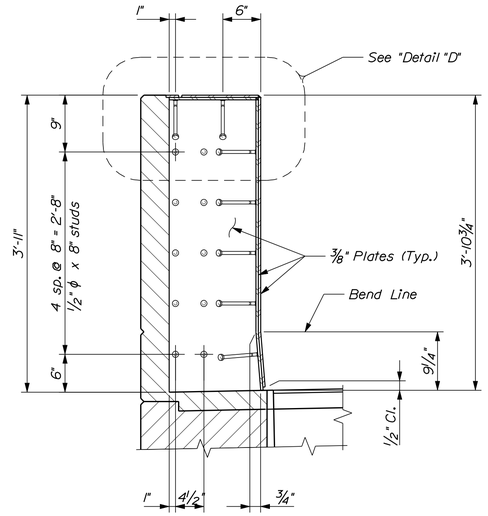

SECTION D - D

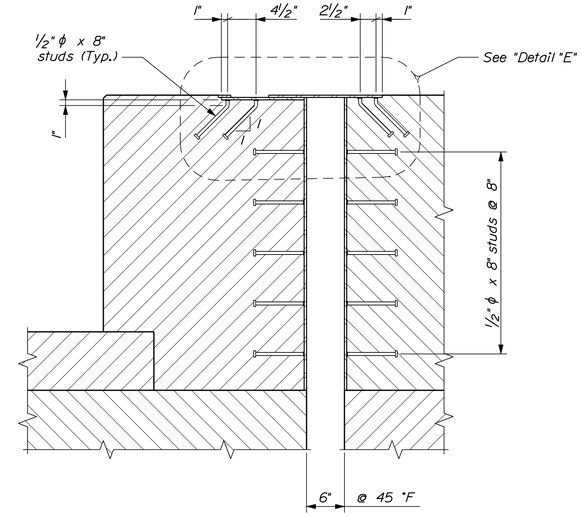

SECTION E - E

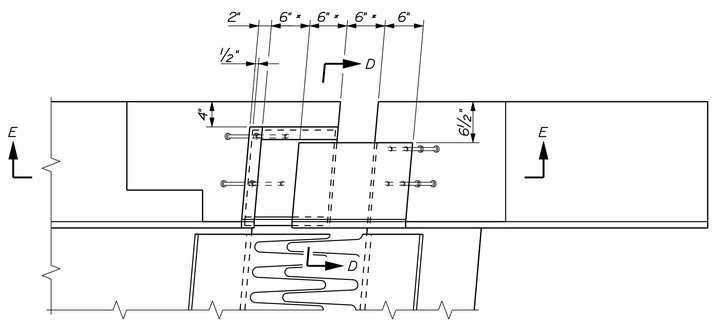

NORTHEAST EXPANSION DAM PLAN
× Dimension @ 45 °F

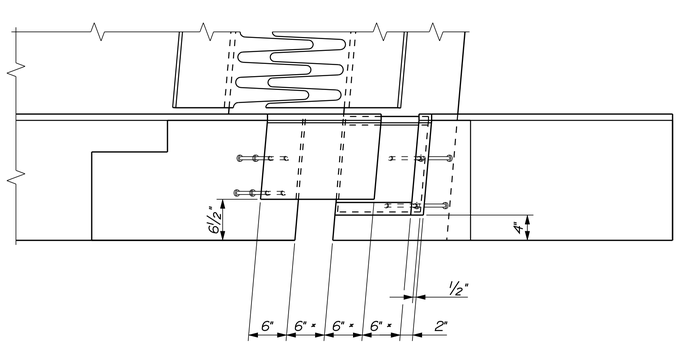

SOUTHEAST EXPANSION DAM PLAN
× Dimension @ 45 °F

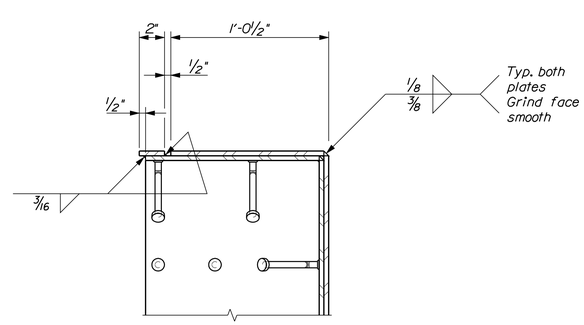

DETAIL "D"
All plates ⅜" thick

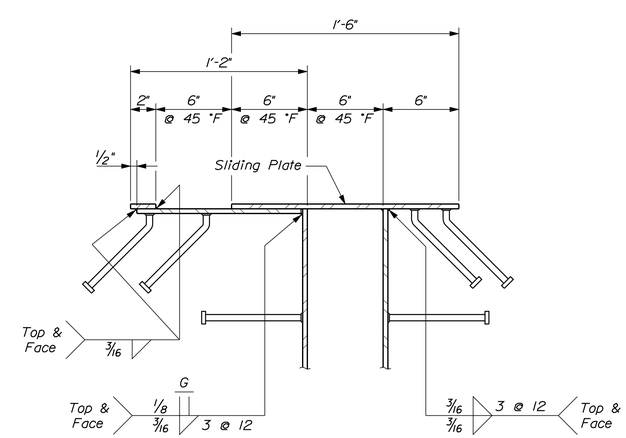

DETAIL "E"
All plates ⅜" thick

STATE OF MAINE
DEPARTMENT OF TRANSPORTATION

AC-BH-1267(400)

WIN 12674.00

BRIDGE NO. 2506

BRIDGE PLANS

		BY	DATE
PROJ. MANAGER	N. Benoit		
DESIGN-DETAILED	D. Damren	D. Damren	Aug. 2012
CHECKED-REVIEWED	------	------	------
DESIGN2-DETAILED2	------	------	------
DESIGN3-DETAILED3	------	------	------
REVISIONS 1	------		
REVISIONS 2	------		
REVISIONS 3	------		
REVISIONS 4	------		
FIELD CHANGES	------		

SIGNATURE

P.E. NUMBER

DATE

MAINE KENNEBEC BRIDGE
KENNEBEC RIVER
RICHMOND, SAGADAHOC CTY. DRESDEN, LINCOLN CTY.

ABUT. NO. 2 EXPANSION DAMS

SHEET NUMBER

190

OF 238

Filename: ...\190_Abut. No. 2 Expansion Dams.dgn Division: BRIDGE Username: dana.damren Date:3/27/2013

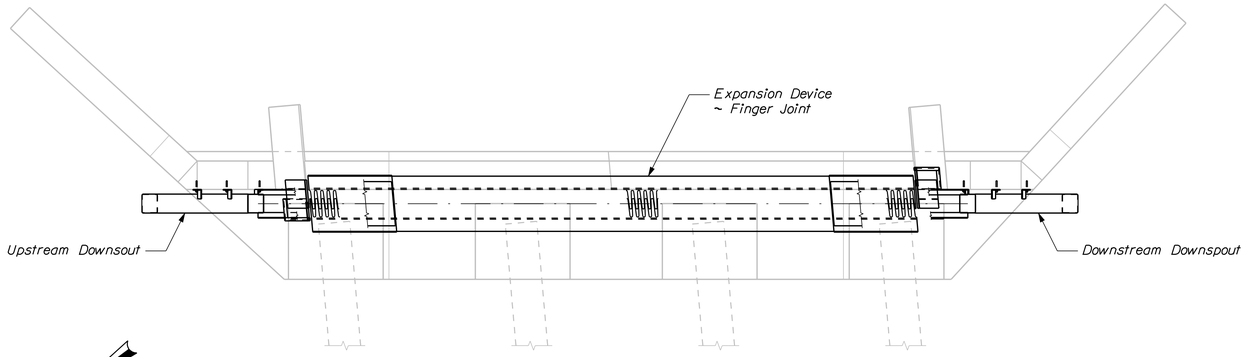

ABUTMENT NO. 2 DOWNSPOUT LOCATION PLAN

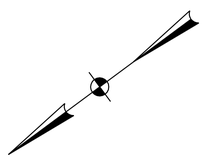

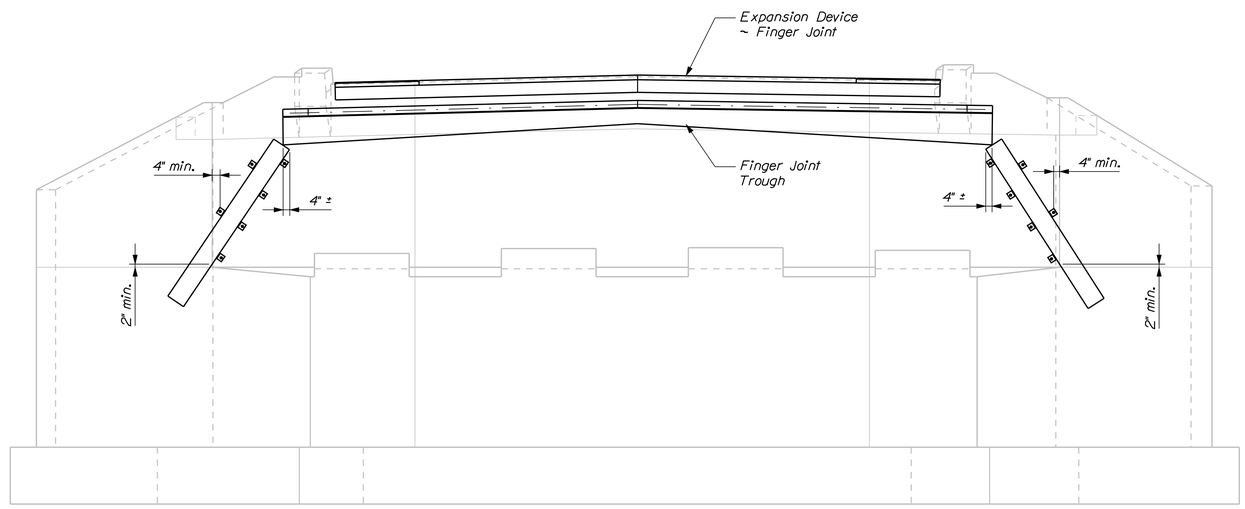

ABUTMENT NO. 2 DOWNSPOUT LOCATION ELEVATION

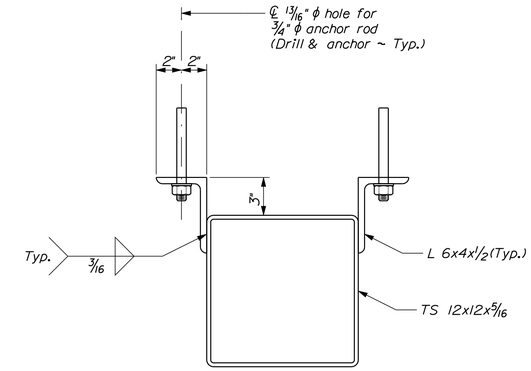

DOWNSPOUT SECTION

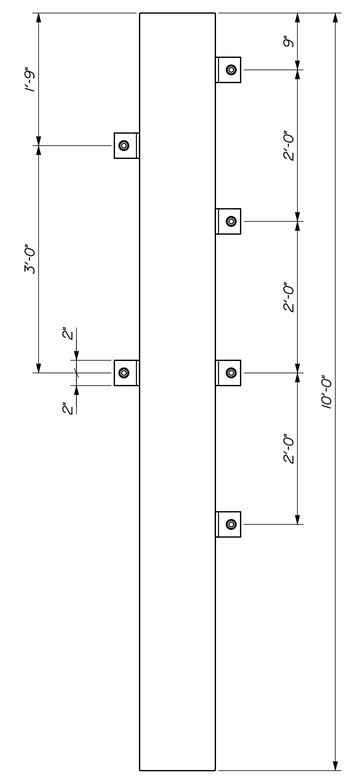

DOWNSPOUT ELEVATION

Upstream Downspout shown
Downstream Downspout opposite hand

DOWNSPOUT NOTES

1. FRP Downspouts shall be designed and detailed based on the dimensions for the downspouts shown, and in accordance with Special Provisions Section 502, Fiber Reinforced Polymer Bridge Drains and Downspouts

2. The exact position of the downspouts shall be determined in the field

STATE OF MAINE
DEPARTMENT OF TRANSPORTATION

AC-BH-1267(400)

WIN 12674.00

BRIDGE NO. 2506

BRIDGE PLANS

		BY	DATE
PROJ. MANAGER	N. Benoit		
DESIGN-DETAILED	D. Damren	D. Damren	Dec. 2012
CHECKED-REVIEWED	------	------	------
DESIGN2-DETAILED2	------	------	------
DESIGN3-DETAILED3	------	------	------
REVISIONS 1	------	------	------
REVISIONS 2	------	------	------
REVISIONS 3	------	------	------
REVISIONS 4	------	------	------
FIELD CHANGES	------	------	------

SIGNATURE

P.E. NUMBER

DATE

MAINE KENNEBEC BRIDGE
KENNEBEC RIVER
RICHMOND, SAGADAHOC CTY. DRESDEN, LINCOLN CTY.

ABUT NO. 2 DOWNSPOUTS

SHEET NUMBER

191

OF 238

Filename: ...\191_Abutment_No. 2 Downspouts.dgn Division: BRIDGE Username: dana.damren Date:3/27/2013

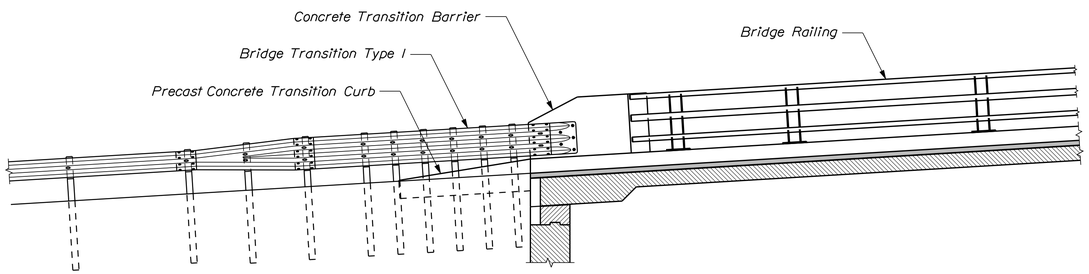

ABUTMENT NO. I CONCRETE TRANSITION BARRIER ~ GENERAL ELEVATION

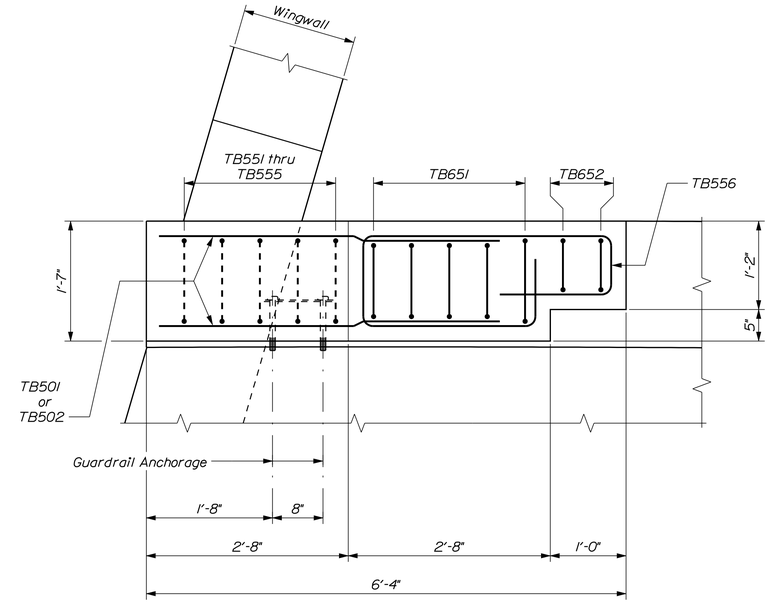

NORTHWEST TRANSITION BARRIER PLAN

Abutment No. I ~ Upstream Side

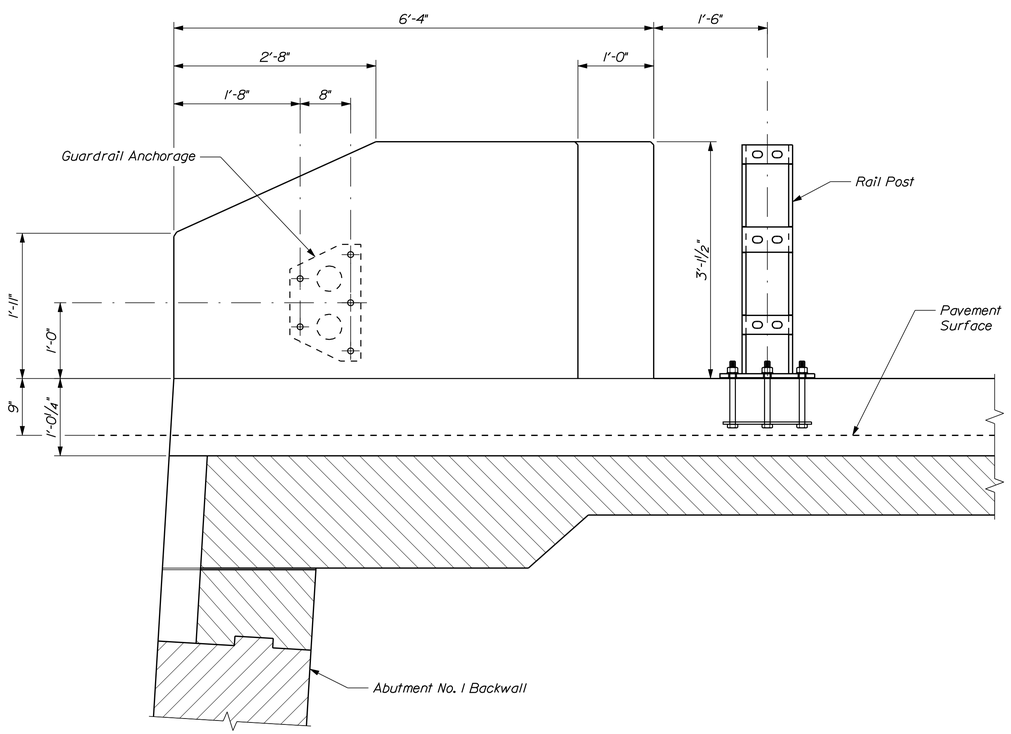

ABUTMENT NO. I TRANSITION BARRIER ELEVATION

Northwest (Upstream) side shown; Southwest (Downstream) side similar

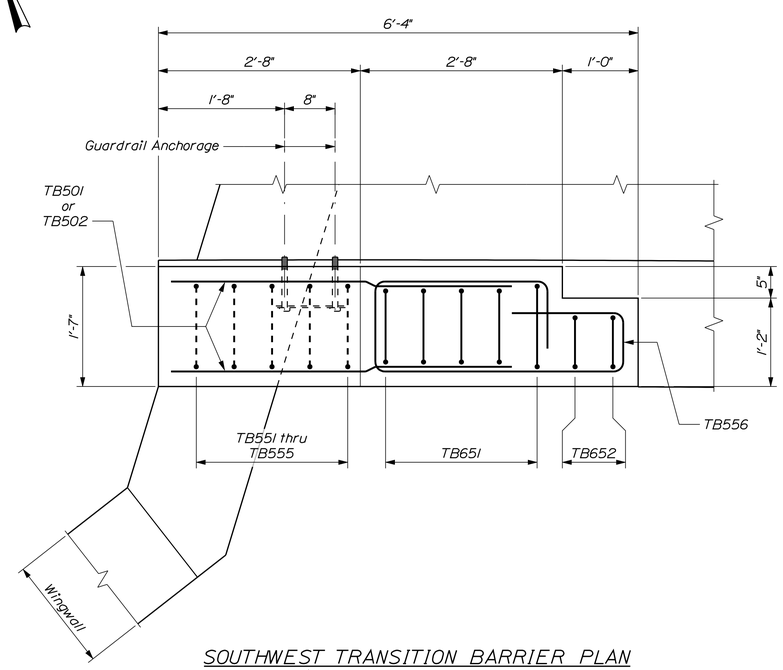

SOUTHWEST TRANSITION BARRIER PLAN

Abutment No. I ~ Downstream Side

STATE OF MAINE
DEPARTMENT OF TRANSPORTATION

AC-BH-1267(400)

WIN 12674.00

BRIDGE NO. 2506

BRIDGE PLANS

		BY	DATE
PROJ. MANAGER	N. Benoit		
DESIGN-DETAILED	D. Damren	D. Damren	Aug. 2012
CHECKED-REVIEWED	------	------	------
DESIGN2-DETAILED2	------	------	------
DESIGN3-DETAILED3	------	------	------
REVISIONS 1	------	------	------
REVISIONS 2	------	------	------
REVISIONS 3	------	------	------
REVISIONS 4	------	------	------
FIELD CHANGES	------	------	------

SIGNATURE

P.E. NUMBER

DATE

MAINE KENNEBEC BRIDGE
KENNEBEC RIVER
RICHMOND, SAGADAHOC CTY. DRESDEN, LINCOLN CTY.

ABUT. NO. 1 CONC. TRANS. BARRIERS

SHEET NUMBER

192

OF 238

Filename: ...\192_Abut. No. 1 Transition Barriers.dgn Division: BRIDGE Username: dana.damren Date:3/27/2013

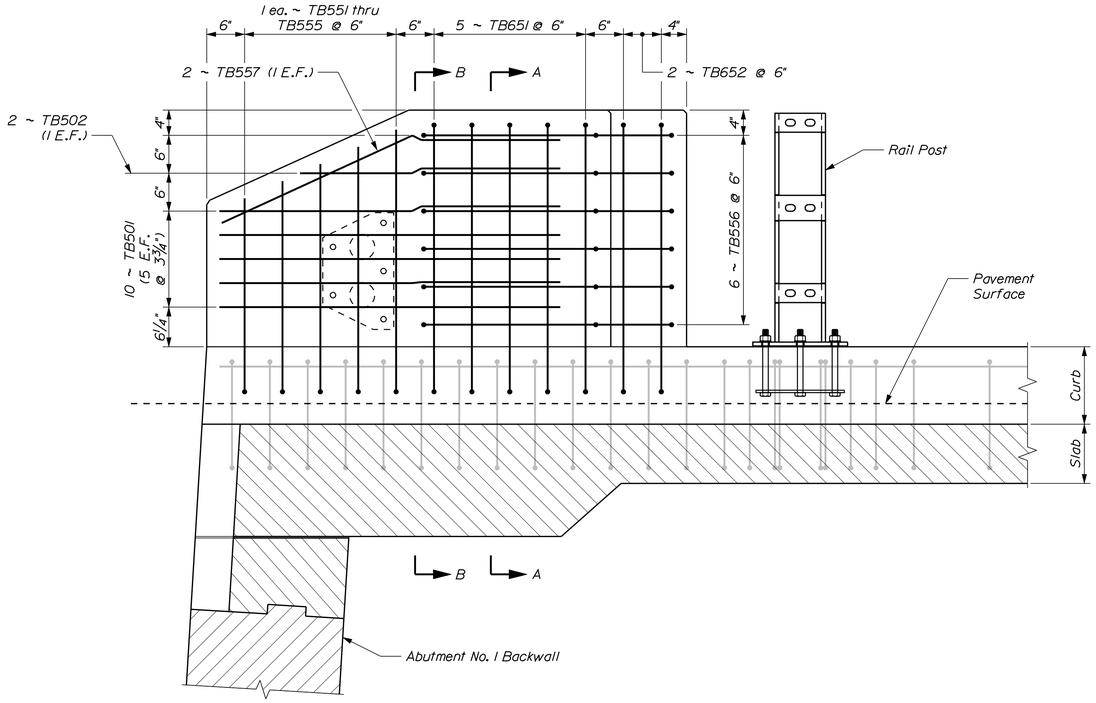

ABUTMENT NO. 1 TRANSITION BARRIER REINFORCING ELEVATION

Northwest (Upstream) side shown; Southwest (Downstream) side similar

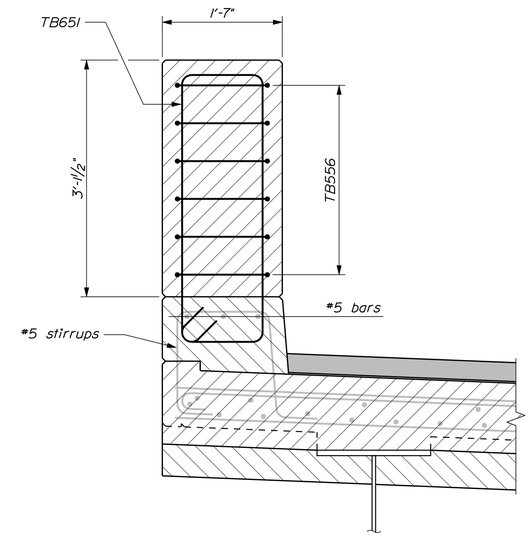

SECTION A - A

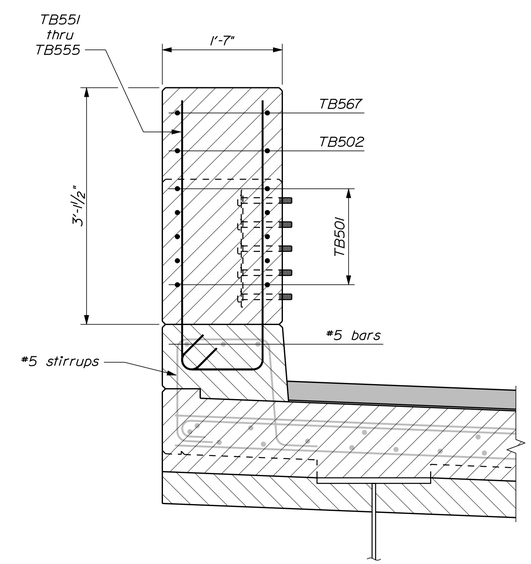

SECTION B - B

TRANSITION BARRIER NOTES

1. Refer to Standard Details Section 526 for Guardrail Anchorage, Precast Concrete Transition Curb and Notes.

2. All reinforcing steel in the Transition Barriers shall meet the requirements of Special Provisions Section 503, Corrosion Resistant Reinforcing.

ABUTMENT NO. 2 TRANSITION BARRIER REINFORCING STEEL SCHEDULE

Mark	Qty.	Dim. "R"	Length
TB501	20	--	4'-6"
TB502	4	--	3'-6"
TB551	2	2'-7"	6'-3"
TB552	2	2'-9½"	6'-8"
TB553	2	3'-0"	7'-1"
TB554	2	3'-2½"	7'-6"
TB555	2	3'-5"	7'-11"
TB556	12	--	10'-2"
TB557	4	--	4'-9"
TB651	10	1'-1"	10'-8"
TB652	4	0'-8"	9'-10"

Note:
Bar Mark TB5XX = #5 bar
Bar Mark TB6XX = #6 bar

Bar quantities are for 2 Concrete Transition Barriers

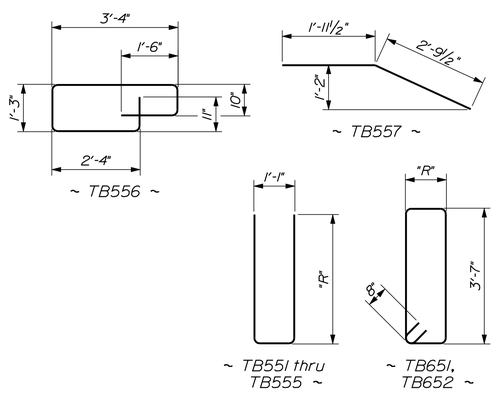

STATE OF MAINE
DEPARTMENT OF TRANSPORTATION

AC-BH-1267(400)

WIN 12674.00

BRIDGE NO. 2506

BRIDGE PLANS

PROJ. MANAGER	N. Benoit	BY	DATE
DESIGN-DETAILED	D. Damren	D. Damren	Aug. 2012
CHECKED-REVIEWED	------	------	------
DESIGN2-DETAILED2	------	------	------
DESIGN3-DETAILED3	------	------	------
REVISIONS 1	------	------	------
REVISIONS 2	------	------	------
REVISIONS 3	------	------	------
REVISIONS 4	------	------	------
FIELD CHANGES	------	------	------

SIGNATURE

P.E. NUMBER

DATE

MAINE KENNEBEC BRIDGE
KENNEBEC RIVER
RICHMOND, SAGADAHOC CTY. DRESDEN, LINCOLN CTY.

ABUT. NO. 1 CONC. TRANS. BARRIERS

SHEET NUMBER

193

OF 238

Filename: ...\193_Abut. No. 1 Transition Barriers.dgn Division: BRIDGE Username: dana.damren Date:4/10/2013

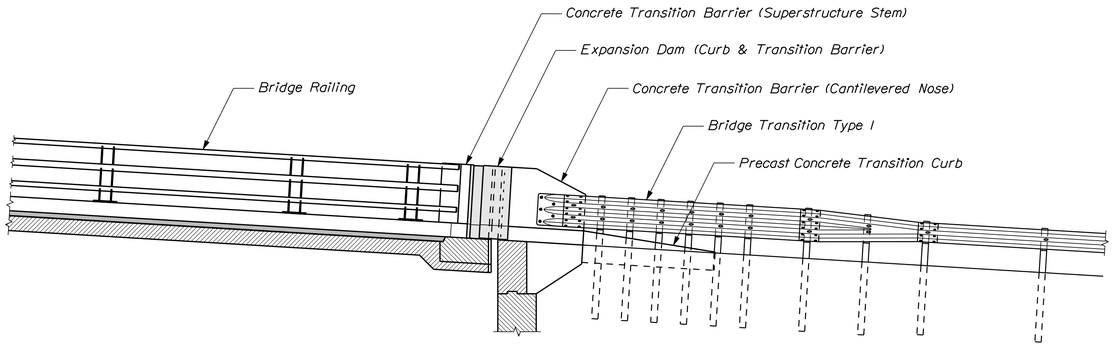

ABUTMENT NO. 2 CONCRETE TRANSITION BARRIER ~ GENERAL ELEVATION

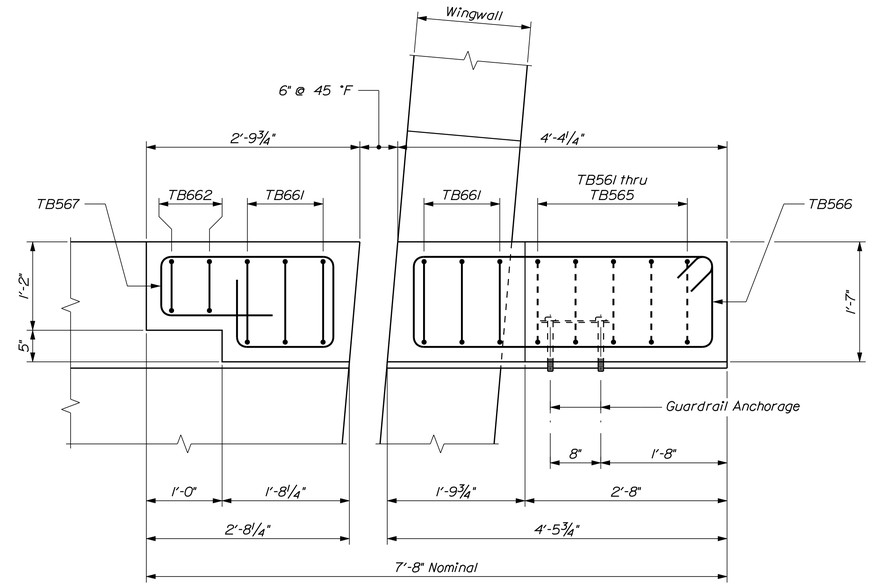

NORTHEAST TRANSITION BARRIER PLAN

Abutment No. 2 ~ Upstream Side

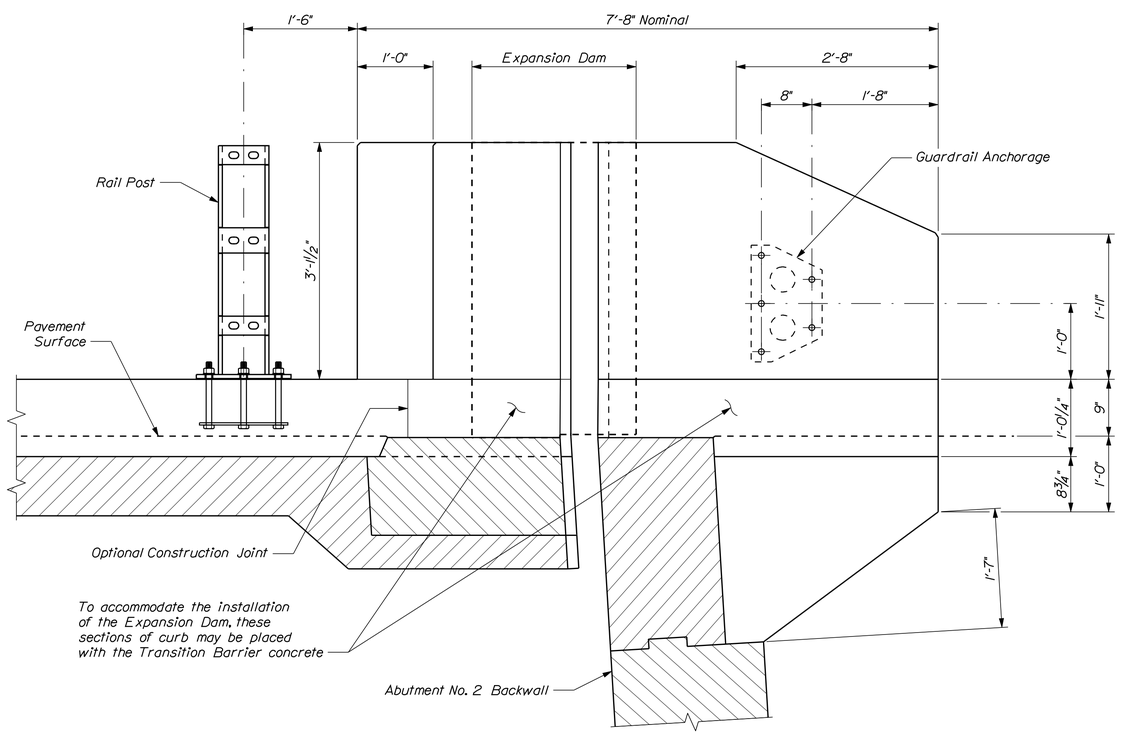

ABUTMENT NO. 2 TRANSITION BARRIER ELEVATION

Northeast (Upstream) side shown; Southeast (Downstream) side similar

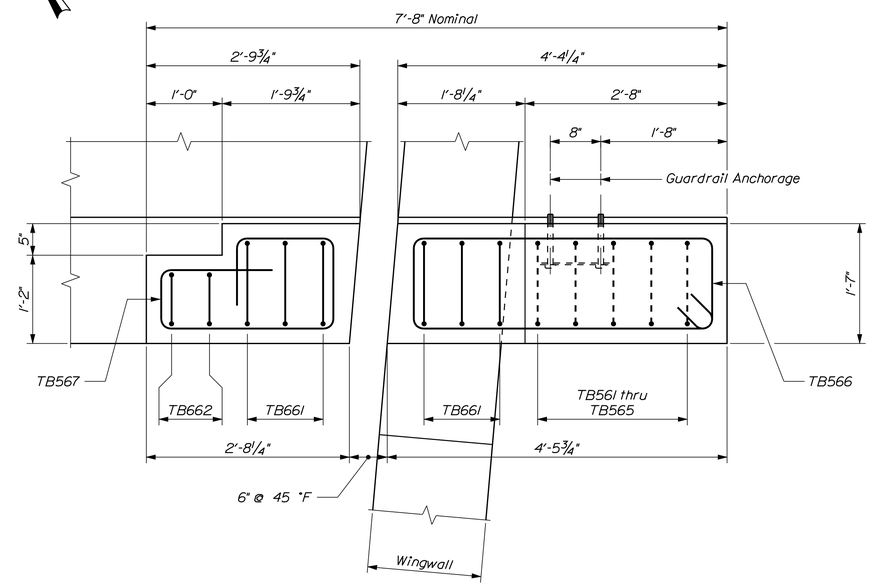

SOUTHEAST TRANSITION BARRIER PLAN

Abutment No. 2 ~ Downstream Side

STATE OF MAINE
DEPARTMENT OF TRANSPORTATION

AC-BH-1267(400)

WIN 12674.00

BRIDGE NO. 2506

BRIDGE PLANS

PROJ. MANAGER	N. Benoit	BY	DATE
DESIGN-DETAILED	D. Damren	D. Damren	Aug. 2012
CHECKED-REVIEWED	D. Damren	------	------
DESIGN2-DETAILED2	------	------	------
DESIGN3-DETAILED3	------	------	------
REVISIONS: 1	------	------	------
REVISIONS: 2	------	------	------
REVISIONS: 3	------	------	------
REVISIONS: 4	------	------	------
FIELD CHANGES	------	------	------

SIGNATURE

P.E. NUMBER

DATE

MAINE KENNEBEC BRIDGE
KENNEBEC RIVER
RICHMOND, SAGADAHOC CTY. DRESDEN, LINCOLN CTY.

ABUT. NO. 2 CONC. TRANS. BARRIERS

SHEET NUMBER

194

OF 238

Filename: ...\194_Abut. No. 2 Transition Barriers.dgn Division: BRIDGE Username: dana.damren Date:3/27/2013

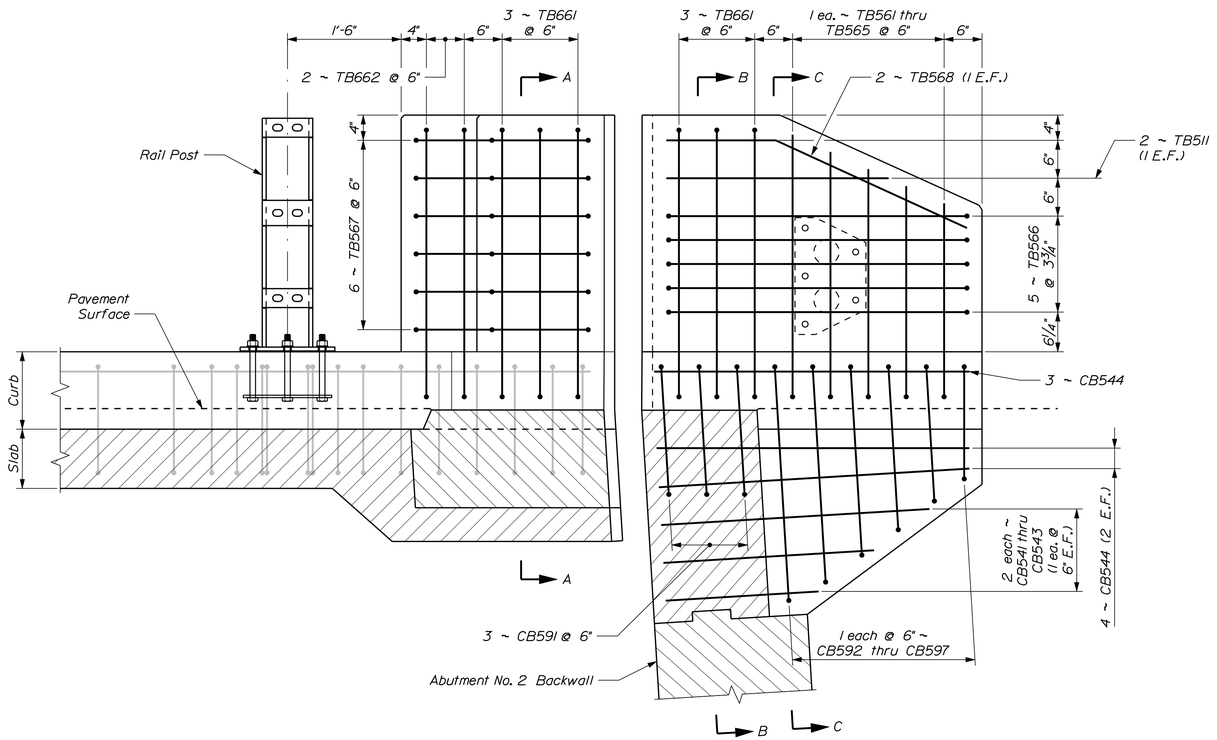

ABUTMENT NO. 2 TRANSITION BARRIER REINFORCING ELEVATION

Northeast (Upstream) side shown; Southeast (Downstream) side similar

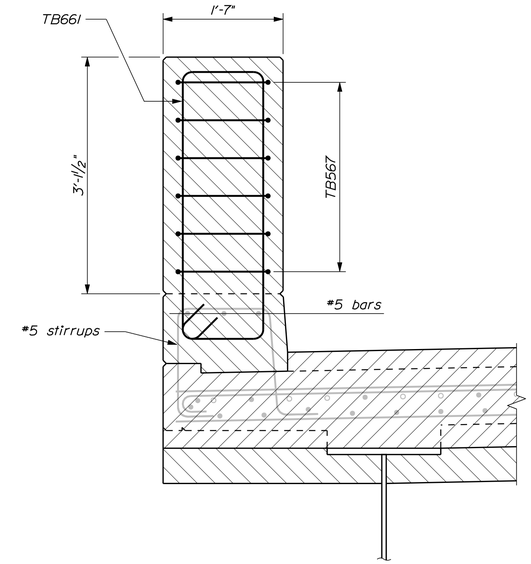

SECTION A - A

TRANSITION BARRIER NOTES

1. Refer to Standard Details Section 526 for Guardrail Anchorage, Precast Concrete Transition Curb and Notes.

2. All reinforcing steel in the Transition Barriers shall meet the requirements of Special Provisions Section 503, Corrosion Resistant Reinforcing.

ABUTMENT NO. 2 TRANSITION BARRIER REINFORCING STEEL SCHEDULE

Mark	Qty.	Dim. "R"	Length
TB511	4	--	3'-0"
TB561	2	2'-7"	6'-3"
TB562	2	2'-9½"	6'-8"
TB563	2	3'-0"	7'-1"
TB564	2	3'-2½"	7'-6"
TB565	2	3'-5"	7'-11"
TB566	10	--	11'-6"
TB567	12	--	8'-2"
TB568	4	--	4'-3"
TB661	12	1'-1"	10'-8"
TB662	4	0'-8"	9'-10"

Note:
Bar Mark TB5XX = #5 bar
Bar Mark TB6XX = #6 bar

Bar quantities are for 2 Concrete Transition Barriers

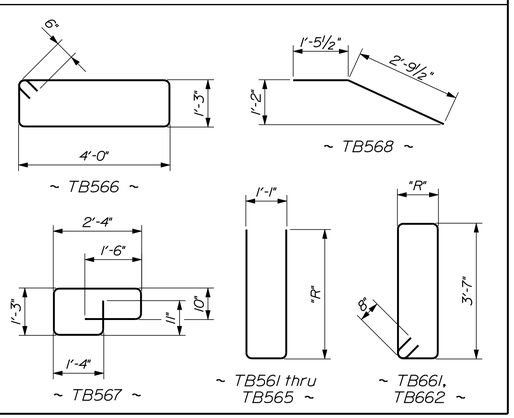

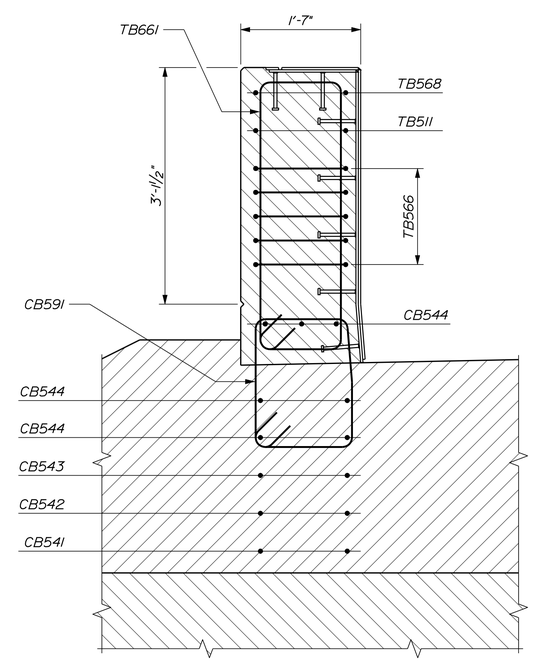

SECTION B - B

Abutment Reinforcing Steel not shown

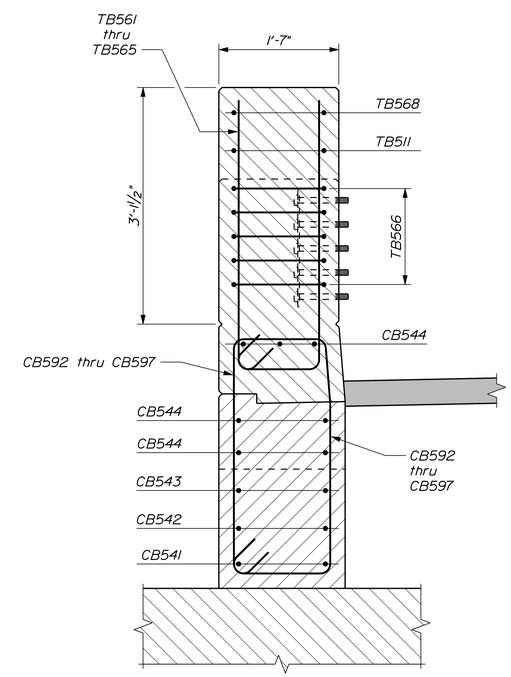

SECTION C - C

STATE OF MAINE
DEPARTMENT OF TRANSPORTATION

AC-BH-1267(400)

WIN 12674.00

BRIDGE NO. 2506

BRIDGE PLANS

PROJ. MANAGER	N. Benoit	BY	DATE
DESIGN-DETAILED	D. Damren	D. Damren	Aug. 2012
CHECKED-REVIEWED	------	------	------
DESIGN2-DETAILED2	------	------	------
DESIGN3-DETAILED3	------	------	------
REVISIONS 1	------	------	------
REVISIONS 2	------	------	------
REVISIONS 3	------	------	------
REVISIONS 4	------	------	------
FIELD CHANGES	------	------	------

SIGNATURE

P.E. NUMBER

DATE

MAINE KENNEBEC BRIDGE
KENNEBEC RIVER
RICHMOND, SAGADAHOC CTY. DRESDEN, LINCOLN CTY.

ABUT. NO. 2 CONC. TRANS. BARRIERS

SHEET NUMBER
195
OF 238

Filename: ...\195_Abut. No. 2 Transition Barriers.dgnDivision: BRIDGE Username: dana.damren Date:4/10/2013

STRAIGHT BARS

MARK	QTY.	LENGTH	LOCATION
			ABUTMENT NO. 1 FOOTING
A601	25	14'-0"	Transverse ~ Breastwall Footing
A602	10	13'-6"	Trans. ~ D.S. Wingwall Footing
A603	6	14'-6"	Trans. ~ U.S. Wingwall Footing
A604	20	12'-0"	Transverse - Footing Corners
A611	28	28'-6"	Longitudinal ~ Breastwall Footing
A612	28	8'-6"	Longitudinal ~ Breastwall Footing
A613	14	15'-6"	Long. ~ D.S. Wingwall Footing
A614	14	13'-0"	Long. ~ D.S. Wingwall Footing
A615	14	13'-3"	Long. ~ U.S. Wingwall Footing
A616	16	9'-0"	Long. ~ U.S. Wingwall Footing
A901	25	14'-0"	Transverse ~ Breastwall Footing
A902	19	13'-6"	Trans. ~ D.S. Wingwall Footing
A903	11	14'-6"	Trans. ~ U.S. Wingwall Footing
A904	28	12'-0"	Transverse - Footing Corners
			ABUTMENT NO. 1 APPROACH SLAB
AS500-1	16	32'-0"	Transverse
AS600-1	62	15'-0"	Longitudinal

MARK	QTY.	LENGTH	LOCATION
			ABUTMENT NO. 1
A501	4	7'-0"	Horizontal ~ D.S. Breastwall
A502	4	11'-0"	Horizontal ~ Center Breastwall
A503	4	9'-8"	Horizontal ~ Center Breastwall
A504	4	7'-0"	Horizontal ~ U.S. Breastwall
A505	41	3'-0"	Vertical ~ Backwall
A511	12	19'-8"	Horizontal ~ Center Backwall
A512	25	3'-1"	Vertical ~ Wingwalls
A513	8	18'-5"	Vertical ~ D.S. Wingwall
A514	5	15'-2"	Vertical ~ D.S. Wingwall
A515	8	21'-6"	Vertical ~ U.S. Wingwall
A516	4	18'-1"	Vertical ~ U.S. Wingwall
A517	1	3'-1"	Horizontal ~ U.S. Parapet
A518	1	2'-11"	Horizontal ~ U.S. Parapet
A521	6	12'-3"	Horizontal ~ D.S. Backwall
A522	5	12'-8"	Horizontal ~ D.S. Backwall
A523	1	12'-0"	Horizontal ~ D.S. Backwall
A524	16	14'-4"	Horizontal ~ D.S. Wingwall
A525	16	7'-8"	Horizontal ~ D.S. Wingwall
A526	5	8'-3"	Horizontal ~ D.S. Wingwall
A527	5	7'-10"	Horizontal ~ D.S. Wingwall
A528-A	2	7'-11"	Horizontal ~ D.S. Wingwall
A528-B	2	5'-1"	Horizontal ~ D.S. Wingwall
A528-C	2	2'-3"	Horizontal ~ D.S. Wingwall
A529	2	8'-6"	Horizontal ~ D.S. Wingwall
A531	6	9'-8"	Horizontal ~ U.S. Backwall
A532	5	9'-7"	Horizontal ~ U.S. Backwall
A533	1	9'-3"	Horizontal ~ U.S. Backwall
A534	19	11'-9"	Horizontal ~ U.S. Wingwall
A535	19	7'-0"	Horizontal ~ U.S. Wingwall
A536	5	7'-6"	Horizontal ~ U.S. Wingwall
A537	5	6'-4"	Horizontal ~ U.S. Wingwall
A538-A	2	5'-3"	Horizontal ~ U.S. Wingwall
A538-B	2	2'-6"	Horizontal ~ U.S. Wingwall
A539	2	8'-0"	Horizontal ~ U.S. Wingwall
A541	8	4'-2"	Vertical ~ D.S. Wingwall
A542	8	5'-5"	Vertical ~ D.S. Wingwall
A543	9	6'-10"	Vertical ~ D.S. Wingwall
A544	7	4'-4"	Vertical ~ U.S. Wingwall
A545	7	6'-4"	Vertical ~ U.S. Wingwall
A546	8	4'-7"	Vertical ~ U.S. Wingwall
A701	34	4'-3"	Vertical ~ Breastwall
A702	7	15'-11"	Vertical ~ D.S. Breastwall
A703	10	16'-6"	Vertical ~ Center Breastwall
A704	10	17'-1"	Vertical ~ Center Breastwall
A705	7	18'-9"	Vertical ~ U.S. Breastwall
A706	12	12'-7"	Vertical ~ D.S. Breastwall
A707	20	13'-8"	Vertical ~ Center Breastwall
A708	9	14'-1"	Vertical ~ U.S. Breastwall
A711	35	19'-8"	Horizontal ~ Center Breastwall
A721	16	7'-4"	Horizontal ~ D.S. Breastwall
A722	17	12'-0"	Horizontal ~ D.S. Breastwall
A731	19	7'-3"	Horizontal ~ U.S. Breastwall
A732	20	8'-5"	Horizontal ~ U.S. Breastwall
A741	16	4'-6"	Utility Blockouts

BENT BARS

MARK	QTY.	LENGTH	TYPE	A	B	C	D	E	F	G	H	O	R	LOCATION
														ABUTMENT NO. 1 FOOTING
A591	123	4'-6"	C-1	0'-5½"	3'-6"	0'-6"	--	--	--	--	--	--	--	Horiz. Bar Ties ~ Footing
														ABUTMENT NO. 1
A461	16	2'-5"	C-1	0'-4½"	1'-8"	0'-4½"	--	--	--	--	--	--	--	Vert. Bar Ties ~ D.S. Wingwall
A471	24	2'-11"	C-1	0'-4½"	2'-2"	0'-4½"	--	--	--	--	--	--	--	Vert. Bar Ties ~ U.S. Wingwall
A551	34	6'-10"	S	0	0'-10"	5'-2"	0'-10"	--	--	0	--	--	--	Horizontal ~ Bridge Seat
A552	34	6'-0"	S	0	1'-8"	2'-8"	1'-8"	--	--	0	--	--	--	Horizontal ~ Bridge Seat
A553	41	6'-2"	L	5'-2"	1'-0"	--	--	--	--	--	--	--	--	Vertical ~ Backwall
A554	36	9'-6"	S	0	2'-1"	1'-2"	6'-3"	--	--	0	--	--	--	Vertical ~ Backwall
A555	2	13'-10"	S	0	4'-3"	1'-2"	8'-5"	--	--	0	--	--	--	Vertical ~ D.S. Parapet
A556	1	13'-8"	S	0	4'-2"	1'-2"	8'-4"	--	--	0	--	--	--	Vertical ~ U.S. Parapet
A557	1	13'-2"	S	0	3'-11"	1'-2"	8'-1"	--	--	0	--	--	--	Vertical ~ U.S. Parapet
A558	1	12'-2"	S	0	3'-5"	1'-2"	7'-7"	--	--	0	--	--	--	Vertical ~ U.S. Parapet
A559	1	3'-4"	V	--	--	--	2'-9"	0'-7"	--	--	0'-3"	--	--	Horizontal ~ U.S. Parapet
A560	1	3'-9"	V	--	--	--	2'-9"	1'-0"	--	--	0'-5"	--	--	Horizontal ~ U.S. Parapet
A561	48	4'-0"	V	--	--	--	2'-0"	2'-0"	--	--	1'-2"	--	--	Horizontal ~ D.S. Corners
A562	8	5'-2"	S	0	2'-0"	1'-2"	2'-0"	--	--	0	--	--	--	Vertical ~ D.S. Wingwall
A571	54	4'-0"	V	--	--	--	2'-0"	2'-0"	--	--	1'-8"	--	--	Horizontal ~ U.S. Corners
A572	8	5'-2"	S	0	2'-0"	1'-2"	2'-0"	--	--	0	--	--	--	Vertical ~ U.S. Wingwall
A581	8	5'-6"	UB	1'-6"	2'-6"	1'-6"	--	--	--	1'-0"	--	--	--	Utility Blockouts
A761	7	10'-3"	L	9'-0"	1'-3"	--	--	--	--	--	--	--	--	Vertical ~ Breastwall
A771	7	11'-2"	L	9'-5"	1'-9"	--	--	--	--	--	--	--	--	Vertical ~ Breastwall
A851	62	13'-0"	L	11'-8"	1'-4"	--	--	--	--	--	--	--	--	Vertical ~ D.S. & Ctr. Breastwall
A852	17	14'-0"	L	12'-8"	1'-4"	--	--	--	--	--	--	--	--	Vertical ~ U.S. Breastwall
A961	13	14'-3"	L	12'-8"	1'-7"	--	--	--	--	--	--	--	--	Vertical ~ D.S. Wingwall
A971	13	16'-9"	L	15'-2"	1'-7"	--	--	--	--	--	--	--	--	Vertical ~ U.S. Wingwall

TYPE - BENDING DIAGRAMS

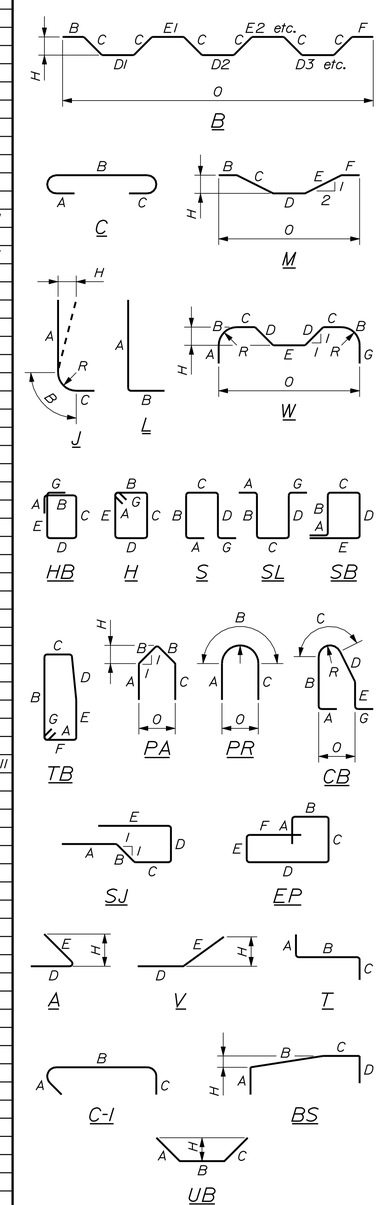

All dimensions are out-to-out of bar.

Bending details and hooks shall conform to the recommendations of the current revision of ACI Standard 315 and ACI Standard 318.

Reinforcing Bar: ASTM A 615/A 615M, Grade 60

GENERAL NOTES

1. The first two digits following the letter(s) of the mark indicate the size of the bar:

   Mark "A502" = bar size #5
   Mark "P805" = bar size #8
   Mark "S650" = bar size #6

2. Each crank bar, Type B, may be replaced by two (2) straight bars (one top and one bottom) of the same bar size as the crank bar. Payment in either case will be based on crank bars as scheduled on the plans.

STATE OF MAINE
DEPARTMENT OF TRANSPORTATION

AC-BH-1267(400)

WIN 12674.00

BRIDGE PLANS

BRIDGE NO. 2506

PROJ. MANAGER	N. Benoit		
DESIGN-DETAILED	D. Damren	Oct. 2012	
CHECKED-REVIEWED	B. Nichols	Feb. 2013	
DESIGN2-DETAILED2			
DESIGN3-DETAILED3			
REVISIONS 1			
REVISIONS 2			
REVISIONS 3			
REVISIONS 4			
FIELD CHANGES			

SIGNATURE

P.E. NUMBER

DATE

MAINE KENNEBEC BRIDGE
KENNEBEC RIVER
RICHMOND, SAGADAHOC CTY. DRESDEN, LINCOLN CTY.

ABUTMENT NO. 1 REINFORCING STEEL SCHEDULE

SHEET NUMBER

196

OF 238

Filename: ...\196_Rebar_Abutment No. 1.dgn Division: BRIDGE Username: dana.damren Date:3/27/2013

STRAIGHT BARS

MARK	QTY.	LENGTH	LOCATION
			ABUTMENT NO. 2 FOOTING
B601	58	12'-0"	Transverse ~ Breastwall Footing
B602	82	11'-0"	Transverse ~ Wingwall Footing
B603	30	10'-0"	Transverse - Footing Corners
B604	24	37'-0"	Longitudinal ~ Breastwall Footing
B605	12	20'-9"	Long. ~ U.S. Wingwall Footing
B606	10	17'-0"	Long. ~ U.S. Wingwall Footing
B607	12	19'-6"	Long. ~ D.S. Wingwall Footing
B608	10	15'-6"	Long. ~ D.S. Wingwall Footing
			ABUTMENT NO. 2 (Coated Bars)
CB501	43	4'-6"	Vertical ~ Backwall
CB511	14	23'-8"	Horizontal ~ Center Backwall
CB521	10	10'-5"	Horizontal ~ U.S. Backwall
CB522	2	10'-1"	Horizontal ~ U.S. Backwall
CB523	2	9'-5"	Horizontal ~ U.S. Backwall
CB531	10	9'-9"	Horizontal ~ D.S. Backwall
CB532	2	9'-4"	Horizontal ~ D.S. Backwall
CB533	2	8'-8"	Horizontal ~ D.S. Backwall
CB541	4	2'-0"	Transition Barrier Base
CB542	4	2'-9"	Transition Barrier Base
CB543	4	3'-6"	Transition Barrier Base
CB544	14	4'-2"	Transition Barrier Base
CB711	14	23'-8"	Horizontal ~ Center Breastwall
CB701	48	4'-3"	Vertical ~ Breastwall
CB702	48	8'-10"	Vertical ~ Breastwall
CB721	10	5'-3"	Horizontal ~ U.S. Breastwall
CB722	1	6'-8"	Horizontal ~ U.S. Breastwall
CB723	1	7'-11"	Horizontal ~ U.S. Breastwall
CB724	1	9'-1"	Horizontal ~ U.S. Breastwall
CB725	1	10'-5"	Horizontal ~ U.S. Breastwall
CB726	9	9'-10"	Horizontal ~ U.S. Breastwall
CB731	10	5'-5"	Horizontal ~ D.S. Breastwall
CB732	1	6'-6"	Horizontal ~ D.S. Breastwall
CB733	1	7'-7"	Horizontal ~ D.S. Breastwall
CB734	1	8'-8"	Horizontal ~ D.S. Breastwall
CB735	1	9'-9"	Horizontal ~ D.S. Breastwall
CB736	9	9'-2"	Horizontal ~ D.S. Breastwall
CB741	8	4'-6"	Utility Blockouts

MARK	QTY.	LENGTH	LOCATION
			ABUTMENT NO. 2 (Plain Bars)
B511	8	23'-8"	Horizontal ~ Center Backwall
B521	8	10'-7"	Horizontal ~ U.S. Backwall
B522	12	3'-1"	Vertical ~ U.S. Wingwall
B523	12	12'-6"	Vertical ~ U.S. Wingwall
B524	8	4'-1"	Vertical ~ U.S. Wingwall
B525	8	5'-7"	Vertical ~ U.S. Wingwall
B526	8	7'-2"	Vertical ~ U.S. Wingwall
B527	28	11'-3"	Horizontal ~ U.S. Wingwall
B528-A	2	10'-5"	Horizontal ~ U.S. Wingwall
B528-B	2	8'-0"	Horizontal ~ U.S. Wingwall
B528-C	2	5'-7"	Horizontal ~ U.S. Wingwall
B528-D	2	3'-11"	Horizontal ~ U.S. Wingwall
B529	2	13'-0"	Horizontal ~ U.S. Wingwall
B531	8	9'-9"	Horizontal ~ D.S. Backwall
B532	12	3'-1"	Vertical ~ D.S. Wingwall
B533	12	12'-8"	Vertical ~ D.S. Wingwall
B534	8	4'-4"	Vertical ~ D.S. Wingwall
B535	8	6'-0"	Vertical ~ D.S. Wingwall
B536	8	7'-8"	Vertical ~ D.S. Wingwall
B537	30	10'-6"	Horizontal ~ D.S. Wingwall
B538-A	2	8'-0"	Horizontal ~ D.S. Wingwall
B538-B	2	6'-3"	Horizontal ~ D.S. Wingwall
B538-C	2	4'-6"	Horizontal ~ D.S. Wingwall
B538-D	2	2'-9"	Horizontal ~ D.S. Wingwall
B539	2	12'-6"	Horizontal ~ D.S. Wingwall
B701	43	12'-0"	Vertical ~ Breastwall
B711	10	23'-8"	Horizontal ~ Center Breastwall
B721	10	10'-7"	Horizontal ~ U.S. Breastwall
B731	10	9'-9"	Horizontal ~ D.S. Breastwall
B741	8	4'-6"	Utility Blockouts
B821	12	10'-1"	Vertical ~ U.S. Wingwall
B831	12	10'-3"	Vertical ~ D.S. Wingwall
			ABUTMENT NO. 2 APPROACH SLAB
AS500-2	16	30'-9"	Transverse
AS600-2	62	15'-0"	Longitudinal

BENT BARS

MARK	QTY.	LENGTH	TYPE	A	B	C	D	E	F	G	H	O	R	LOCATION
														ABUTMENT NO. 2 (Coated Bars)
CB551	43	14'-9"	S	0	8'-9"	1'-2"	4'-10"	--	--	0	--	--	--	Vertical ~ Backwall
CB561	1	6'-4"	V	--	--	--	2'-10"	3'-6"	--	--	1'-7"	--	--	Horizontal ~ U.S. Parapet
CB562	1	5'-3"	V	--	--	--	2'-5"	2'-10"	--	--	1'-3"	--	--	Horizontal ~ U.S. Parapet
CB563	9	6'-7"	V	--	--	--	3'-10"	2'-9"	--	--	1'-9½"	--	--	Horiz. ~ U.S. Breastwall Corner
CB571	1	6-2"	V	--	--	--	2'-7"	3'-7"	--	--	1'-6"	--	--	Horizontal ~ D.S. Parapet
CB572	1	5'-9"	V	--	--	--	2'-11"	2'-10"	--	--	1'-3"	--	--	Horizontal ~ D.S. Parapet
CB573	9	6'-9"	V	--	--	--	4'-0"	2'-9"	--	--	2'-0"	--	--	Horiz. ~ D.S. Breastwall Corner
CB581	4	5'-6"	UB	1'-6"	2'-6"	1'-6"	--	--	--	--	--	--	--	Utility Blockouts
CB591	6	6'-8"	TB	0'-5½"	1'-9"	1'-3"	0'-10"	0'-11"	1'-4"	0'-5½"	--	--	--	Transition Barrier Base
CB592	2	9'-8"	TB	0'-5½"	3'-1"	1'-3"	0'-10"	2'-3"	1'-4"	0'-5½"	--	--	--	Transition Barrier Base
CB593	2	9'-4"	TB	0'-5½"	2'-11"	1'-3"	0'-10"	2'-1"	1'-4"	0'-5½"	--	--	--	Transition Barrier Base
CB594	2	8'-6"	TB	0'-5½"	2'-6"	1'-3"	0'-10"	1'-8"	1'-4"	0'-5½"	--	--	--	Transition Barrier Base
CB595	2	7'-10"	TB	0'-5½"	2'-2"	1'-3"	0'-10"	1'-4"	1'-4"	0'-5½"	--	--	--	Transition Barrier Base
CB596	2	7'-0"	TB	0'-5½"	1'-10"	1'-3"	0'-10"	1'-0"	1'-4"	0'-5½"	--	--	--	Transition Barrier Base
CB597	2	6'-6"	TB	0'-5½"	1'-6"	1'-3"	0'-10"	0'-8"	1'-4"	0'-5½"	--	--	--	Transition Barrier Base
CB751	35	10'-11"	BS	2'-3"	4'-7"	1'-10"	2'-3"	--	--	--	0'-6"	--	--	Horizontal ~ Bridge Seat
CB752	16	12'-4"	S	0	3'-10"	4'-8"	3'-10"	--	--	0	--	--	--	Pedestals
CB753	20	11'-4"	S	0	3'-10"	3'-8"	3'-10"	--	--	0	--	--	--	Pedestals
CB761	1	10'-10"	BS	2'-3"	4'-6"	1'-10"	2'-3"	--	--	--	0'-5½"	--	--	Horiz. ~ Bridge Seat U.S. End
CB762	1	9'-11"	BS	2'-3"	3'-7"	1'-10"	2'-3"	--	--	--	0'-4½"	--	--	Horiz. ~ Bridge Seat U.S. End
CB763	1	9'-0"	BS	2'-3"	2'-8"	1'-10"	2'-3"	--	--	--	0'-3½"	--	--	Horiz. ~ Bridge Seat U.S. End
CB764	1	8'-1"	BS	2'-3"	1'-9"	1'-10"	2'-3"	--	--	--	0'-2"	--	--	Horiz. ~ Bridge Seat U.S. End
CB765	1	7'-2"	BS	2'-3"	0'-10"	1'-10"	2'-3"	--	--	--	0'-1"	--	--	Horiz. ~ Bridge Seat U.S. End
CB766	9	4'-6"	V	--	--	--	2'-3"	2'-3"	--	--	1'-6"	--	--	Horiz. ~ U.S. Breastwall Corner
CB771	1	9'-11"	BS	2'-3"	3'-7"	1'-10"	2'-3"	--	--	--	0'-4½"	--	--	Horiz. ~ Bridge Seat D.S. End
CB772	1	8'-10"	BS	2'-3"	2'-6"	1'-10"	2'-3"	--	--	--	0'-3¼"	--	--	Horiz. ~ Bridge Seat D.S. End
CB773	1	7'-9"	BS	2'-3"	1'-5"	1'-10"	2'-3"	--	--	--	0'-2"	--	--	Horiz. ~ Bridge Seat D.S. End
CB774	1	6'-8"	BS	2'-3"	0'-4"	1'-10"	2'-3"	--	--	--	0'-0½"	--	--	Horiz. ~ Bridge Seat D.S. End
CB776	9	4'-6"	V	--	--	--	2'-3"	2'-3"	--	--	1'-8"	--	--	Horiz. ~ D.S. Breastwall Corner
														ABUTMENT NO. 2 (Plain Bars)
B451	48	1'-11"	C-1	0'-4½"	1'-2"	0'-4½"	--	--	--	--	--	--	--	Ties on Vertical Bars
B551	43	7'-7"	L	6'-7"	1'-0"	--	--	--	--	--	--	--	--	Vertical ~ Backwall
B561	19	4'-0"	V	--	--	--	2'-0"	2'-0"	--	--	1'-4"	--	--	Horizontal ~ U.S. Back Corner
B562	12	5'-2"	S	0	2'-0"	1'-2"	2'-0"	--	--	0	--	--	--	Vertical ~ Top of U.S. Wingwall
B571	19	4'-0"	V	--	--	--	2'-0"	2'-0"	--	--	1'-5½"	--	--	Horizontal ~ D.S. Back Corner
B572	12	5'-2"	S	0	2'-0"	1'-2"	2'-0"	--	--	0	--	--	--	Vertical ~ Top of D.S. Wingwall
B581	4	5'-6"	UB	1'-6"	2'-6"	1'-6"	--	--	--	--	--	--	--	Utility Blockouts
B851	43	6'-9"	L	5'-5"	1'-4"	--	--	--	--	--	--	--	--	Vertical ~ Breastwall
B861	23	10'-0"	L	8'-8"	1'-4"	--	--	--	--	--	--	--	--	Vertical ~ U.S. Wingwall
B871	23	10'-0"	L	8'-8"	1'-4"	--	--	--	--	--	--	--	--	Vertical ~ D.S. Wingwall

TYPE - BENDING DIAGRAMS

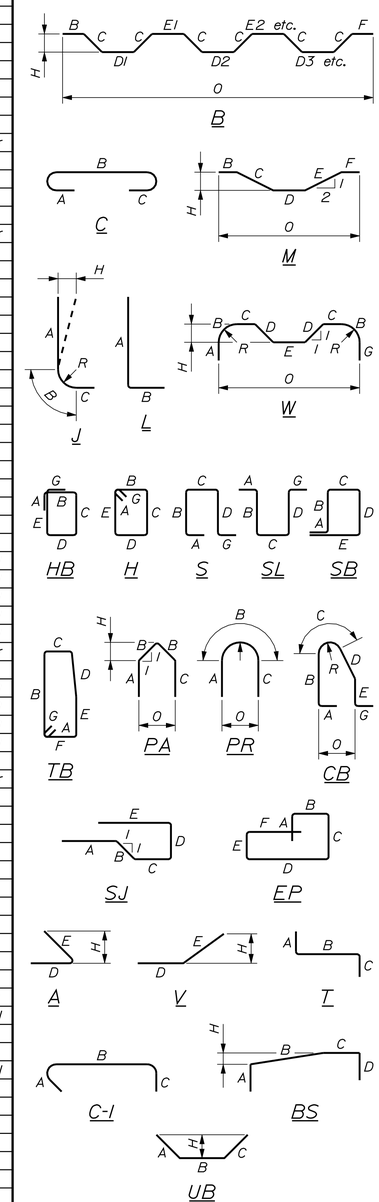

All dimensions are out-to-out of bar.

Bending details and hooks shall conform to the recommendations of the current revision of ACI Standard 315 and ACI Standard 318.

Reinforcing Bar: ASTM A 615/A 615M, Grade 60

GENERAL NOTES

1. The first two digits following the letter(s) of the mark indicate the size of the bar:

   Mark "A502" = bar size #5
   Mark "P805" = bar size #8
   Mark "S650" = bar size #6

2. Each crank bar, Type B, may be replaced by two (2) straight bars (one top and one bottom) of the same bar size as the crank bar. Payment in either case will be based on crank bars as scheduled on the plans.

STATE OF MAINE
DEPARTMENT OF TRANSPORTATION

AC-BH-1267(400)

WIN 12674.00

BRIDGE PLANS

BRIDGE NO. 2506

PROJ. MANAGER	N. Benoit		
DESIGN-DETAILED		D. Damren	Oct. 2012
CHECKED-REVIEWED		B. Nichols	Feb. 2013
DESIGN2-DETAILED2			
DESIGN3-DETAILED3			
REVISIONS 1			
REVISIONS 2			
REVISIONS 3			
REVISIONS 4			
FIELD CHANGES			

SIGNATURE | P.E. NUMBER | DATE

MAINE KENNEBEC BRIDGE
KENNEBEC RIVER
RICHMOND, SAGADAHOC CTY. DRESDEN, LINCOLN CTY.

ABUTMENT NO. 2 REINFORCING STEEL SCHEDULE

SHEET NUMBER
197
OF 238

Filename: ...\197_Rebar_Abutment No. 2.dgn Division: BRIDGE Username: dana.damren Date:3/27/2013

STRAIGHT BARS

MARK	QTY.	LENGTH	LOCATION	MARK	QTY.	LENGTH	LOCATION
IP800	20	27'-6"	Dist. Slab - Top Mat	IP400	8	8'-11"	Support for Int. Shaft Vert.
IP801	44	5'-0"	Dist. Slab - Dowel	IP401	4	8'-0"	Support for Int. Shaft Vert.
IP802	28	19'-6"	Dist. Slab - Top Mat	IP402	6	7'-1"	Support for Int. Shaft Vert.
				IP403	6	6'-2"	Support for Int. Shaft Vert.
IP900	29	27'-6"	Dist. Slab - Bottom Mat	IP404	10	5'-3"	Support for Int. Shaft Vert.
IP901	65	19'-6"	Dist. Slab - Bottom Mat				
			COATED BARS				
ICP700	2	19'-11"	Horiz -Pier Cap Face	ICP902	1	33'-11"	Horiz -Pier Cap Top
ICP701	2	25'-2"	Horiz -Pier Cap Face	ICP903	1	35'-11"	Horiz -Pier Cap Top
ICP702	2	29'-3"	Horiz -Pier Cap Face	ICP904	1	37'-2"	Horiz -Pier Cap Top
ICP703	2	29'-6"	Horiz -Pier Cap Face	ICP905	1	37'-11"	Horiz -Pier Cap Top
ICP704	2	29'-8"	Horiz -Pier Cap Face	ICP906	1	38'-5"	Horiz -Pier Cap Top
ICP705	2	29'-9"	Horiz -Pier Cap Face	ICP907	1	38'-9"	Horiz -Pier Cap Top
ICP706	2	29'-10"	Horiz -Pier Cap Face	ICP908	1	36'-6"	Horiz -Pier Cap Top
ICP707	2	30'-0"	Horiz -Pier Cap Face	ICP909	1	33'-7"	Horiz -Pier Cap Top
ICP708	2	30'-1"	Horiz -Pier Cap Face	ICP910	1	35'-6"	Horiz -Pier Cap Top
ICP709	2	30'-3"	Horiz -Pier Cap Face	ICP911	1	36'-8"	Horiz -Pier Cap Top
ICP710	2	30'-4"	Horiz -Pier Cap Face	ICP912	1	37'-5"	Horiz -Pier Cap Top
ICP711	2	30'-5"	Horiz -Pier Cap Face	ICP913	1	38'-0"	Horiz -Pier Cap Top
ICP712	1	30'-7"	Horiz -Pier Cap Face	ICP914	1	38'-4"	Horiz -Pier Cap Top
ICP713	2	30'-9"	Horiz -Pier Cap Face	ICP915	1	38'-7"	Horiz -Pier Cap Top
				ICP916	1	36'-3"	Horiz -Pier Cap Top

Note: All reinforcing steel in the pier cap shall meet the requirements of Special Provisions Section 503, Corrosion Resistant Reinforcing.

BENT BARS

MARK	QTY.	LENGTH	TYPE	A	B	C	D	E	F	G	H	O	R	LOCATION
IP550	96	8'-2"	S	-	1'-10"	4'-6"	1'-10"	-	-	-	-	-	-	Dist. Slab End Vert.
IP551	8	31'-2"	S	-	1'-10"	27'-6"	1'-10"	-	-	-	-	-	-	Dist. Slab End Horiz.
IP552	8	23'-2"	S	-	1'-10"	19'-6"	1'-10"	-	-	-	-	-	-	Dist. Slab End Horiz.
IP553	468	8'-6"	P3	0'-6"	7'-5"	-	-	-	-	0'-7"	-	-	-	Shaft Sets "IA" through "ID"
IP554	120	8'-5"	P2	0'-6"	7'-5"	-	-	-	-	0'-6"	-	-	-	Shaft Sets "IA" through "ID"
IP555	120	8'-2"	P2	0'-6"	7'-2"	-	-	-	-	0'-6"	-	-	-	Shaft Sets "IA" through "ID"
IP556	120	7'-3"	P2	0'-6"	6'-3"	-	-	-	-	0'-6"	-	-	-	Shaft Sets "IA" through "ID"
IP557	94	6'-10"	P1	0'-6"	6'-4"	-	-	-	-	-	-	-	-	Shaft Sets "IA" & "IB"
IP558	376	4'-2"	P1	0'-6"	3'-8"	-	-	-	-	-	-	-	-	Shaft Sets "IA" & "IB"
IP559	48	8'-4"	P1	0'-6"	7'-10"	-	-	-	-	-	-	-	-	Shaft Set "IC"
IP560	108	7'-10"	P1	0'-6"	7'-4"	-	-	-	-	-	-	-	-	Shaft Set "ID"
IP562	66	25'-6"	PR	6'-11"	11'-8"	6'-11"	-	-	-	-	-	7'-5"	3'-9"	Shaft Set "IA"
IP563	56	24'-6"	PR	6'-5"	11'-8"	6'-5"	-	-	-	-	-	7'-5"	3'-9"	Shaft Sets "IB" &"IC"
IP564	18	22'-8"	PR	5'-6"	11'-8"	5'-6"	-	-	-	-	-	7'-5"	3'-9"	Shaft Set "ID"
IP566	66	13'-9"	P1	0'-6"	13'-3"	-	-	-	-	-	-	-	-	Shaft Set "IA"
IP567	28	13'-3"	P1	0'-6"	12'-9"	-	-	-	-	-	-	-	-	Shaft Set "IB"
IP1150	44	48'-6"	L	2'-0"	46'-6"	-	-	-	-	-	-	-	-	Shaft Vertical
IP1151	42	48'-7"	L	2'-0"	46'-7"	-	-	-	-	-	-	-	-	Shaft Vertical
IP1152	8	34'-9"	L	2'-0"	32'-9"	-	-	-	-	-	-	-	-	Shaft Vertical
IP1153	8	27'-3"	L	2'-0"	25'-3"	-	-	-	-	-	-	-	-	Shaft Vertical
IP1154	8	19'-9"	L	2'-0"	17'-9"	-	-	-	-	-	-	-	-	Shaft Vertical
IP1155	8	12'-3"	L	2'-0"	10'-3"	-	-	-	-	-	-	-	-	Shaft Vertical
IP1156	4	40'-8"	L	2'-0"	38'-8"	-	-	-	-	-	-	-	-	Shaft Vertical
								COATED BARS						
ICP553	65	8'-6"	P3	0'-6"	7'-5"	-	-	-	-	0'-7"	-	-	-	Shaft Set "IE"
ICP555	26	8'-2"	P2	0'-6"	7'-2"	-	-	-	-	0'-6"	-	-	-	Shaft Set "IE"
ICP556	26	7'-3"	P2	0'-6"	6'-3"	-	-	-	-	0'-6"	-	-	-	Shaft Set "IE"
ICP561	156	7'-5"	P1	0'-6"	6'-11"	-	-	-	-	-	-	-	-	Shaft Set "IE"
ICP565	26	20'-10"	PR	4'-7"	11'-8"	4'-7"	-	-	-	-	-	7'-5"	3'-9"	Shaft Set "IE"
ICP571	44	17'-8"	S	-	7'-0"	3'-8"	7'-0"	-	-	-	-	-	-	Pier Cp. Shear Stirr. - Set "IE"
ICP572	28	17'-8"	S	-	7'-0"	3'-8"	7'-0"	-	-	-	-	-	-	Pier Cp. Shear Stirr. - Set "IF"
ICP573	28	16'-10"	S	-	6'-7"	3'-8"	6'-7"	-	-	-	-	-	-	Pier Cp. Shear Stirr. - Set "IG"
ICP574	27	15'-10"	S	-	6'-1"	3'-8"	6'-1"	-	-	-	-	-	-	Pier Cp. Shear Stirr. - Set "IH"
ICP575	8	14'-8"	S	-	5'-7"	3'-6"	5'-7"	-	-	-	-	-	-	Pier Cp. Shear Stirr. - Set "IJ-A"
ICP576	4	14'-7"	S	-	5'-7"	3'-5"	5'-7"	-	-	-	-	-	-	Pier Cp. Shear Stirr. - Set "IJ-B"
ICP577	4	14'-6"	S	-	5'-7"	3'-4"	5'-7"	-	-	-	-	-	-	Pier Cp. Shear Stirr. - Set "IJ-C"
ICP578	4	14'-2"	S	-	5'-7"	3'-0"	5'-7"	-	-	-	-	-	-	Pier Cp. Shear Stirr. - Set "IJ-D"
ICP579	4	12'-9"	S	-	5'-1"	2'-7"	5'-1"	-	-	-	-	-	-	Pier Cp. Shear Stirr. - Set "IK-A"
ICP580	4	12'-1"	S	-	5'-1"	1'-11"	5'-1"	-	-	-	-	-	-	Pier Cp. Shear Stirr. - Set "IK-B"
ICP581	4	10'-11"	S	-	5'-1"	0'-9"	5'-1"	-	-	-	-	-	-	Pier Cp. Shear Stirr. - Set "IK-C"
ICP582	44	17'-1"	S	-	6'-3"	4'-7"	6'-3"	-	-	-	-	-	-	Pier Cp. Shear Stirr. - Set "IE"
ICP583	28	17'-1"	S	-	6'-3"	4'-7"	6'-3"	-	-	-	-	-	-	Pier Cp. Shear Stirr. - Set "IF"
ICP584	28	16'-3"	S	-	5'-10"	4'-7"	5'-10"	-	-	-	-	-	-	Pier Cp. Shear Stirr. - Set "IG"
ICP585	27	15'-3"	S	-	5'-4"	4'-7"	5'-4"	-	-	-	-	-	-	Pier Cp. Shear Stirr. - Set "IH"
ICP586	20	14'-3"	S	-	4'-10"	4'-7"	4'-10"	-	-	-	-	-	-	Pier Cp. Shear Stirr. - Set "IJ"
ICP587	12	13'-3"	S	-	4'-4"	4'-7"	4'-4"	-	-	-	-	-	-	Pier Cp. Shear Stirr. - Set "IK"
ICP588	44	17'-9"	S	-	6'-3"	5'-3"	6'-3"	-	-	-	-	-	-	Pier Cp. Shear Stirr. - Set "IE"
ICP589	28	17'-9"	S	-	6'-3"	5'-3"	6'-3"	-	-	-	-	-	-	Pier Cp. Shear Stirr. - Set "IF"
ICP590	28	16'-11"	S	-	5'-10"	5'-3"	5'-10"	-	-	-	-	-	-	Pier Cp. Shear Stirr. - Set "IG"
ICP591	27	15'-11"	S	-	5'-4"	5'-3"	5'-4"	-	-	-	-	-	-	Pier Cp. Shear Stirr. - Set "IH"
ICP592	20	14'-11"	S	-	4'-10"	5'-3"	4'-10"	-	-	-	-	-	-	Pier Cp. Shear Stirr. - Set "IJ"
ICP593	12	13'-11"	S	-	4'-4"	5'-3"	4'-4"	-	-	-	-	-	-	Pier Cp. Shear Stirr. - Set "IK"
ICP594	16	17'-2"	PR	2'-9"	11'-8"	2'-9"	-	-	-	-	-	7'-5"	3'-9"	Pier Cp. - End Stirup
ICP950	4	18'-9"	V	-	-	-	8'-7"	10'-2"	-	-	3'-3"	-	-	Pier Cap - Horiz - Bott. Face
ICP951	4	19'-11"	V	-	-	-	8'-7"	11'-4"	-	-	3'-7"	-	-	Pier Cap - Horiz - Bott. Face
ICP952	4	20'-7"	V	-	-	-	8'-7"	12'-0"	-	-	3'-10"	-	-	Pier Cap - Horiz - Bott. Face
ICP953	4	21'-0"	V	-	-	-	8'-7"	12'-5"	-	-	3'-11"	-	-	Pier Cap - Horiz - Bott. Face
ICP954	4	21'-3"	V	-	-	-	8'-7"	12'-8"	-	-	4'-0"	-	-	Pier Cap - Horiz - Bott. Face
ICP955	4	21'-4"	V	-	-	-	8'-7"	12'-9"	-	-	4'-1"	-	-	Pier Cap - Horiz - Bott. Face
ICP956	1	37'-1"	S	-	1'-7"	33'-11"	1'-7"	-	-	-	-	-	-	Pier Cap Top Face
ICP957	1	39'-1"	S	-	1'-7"	35'-11"	1'-7"	-	-	-	-	-	-	Pier Cap Top Face
ICP958	1	40'-4"	S	-	1'-7"	37'-2"	1'-7"	-	-	-	-	-	-	Pier Cap Top Face
ICP959	1	41'-1"	S	-	1'-7"	37'-11"	1'-7"	-	-	-	-	-	-	Pier Cap Top Face
ICP960	1	41'-7"	S	-	1'-7"	38'-5"	1'-7"	-	-	-	-	-	-	Pier Cap Top Face
ICP961	1	41'-11"	S	-	1'-7"	38'-9"	1'-7"	-	-	-	-	-	-	Pier Cap Top Face
ICP962	1	39'-8"	S	-	1'-7"	36'-6"	1'-7"	-	-	-	-	-	-	Pier Cap Top Face
ICP963	1	36'-9"	S	-	1'-7"	33'-7"	1'-7"	-	-	-	-	-	-	Pier Cap Top Face
ICP964	1	38'-8"	S	-	1'-7"	35'-6"	1'-7"	-	-	-	-	-	-	Pier Cap Top Face
ICP965	1	39'-10"	S	-	1'-7"	36'-8"	1'-7"	-	-	-	-	-	-	Pier Cap Top Face
ICP966	1	40'-7"	S	-	1'-7"	37'-5"	1'-7"	-	-	-	-	-	-	Pier Cap Top Face
ICP967	1	41'-2"	S	-	1'-7"	38'-0"	1'-7"	-	-	-	-	-	-	Pier Cap Top Face
ICP968	1	41'-6"	S	-	1'-7"	38'-4"	1'-7"	-	-	-	-	-	-	Pier Cap Top Face
ICP969	1	41'-9"	S	-	1'-7"	38'-7"	1'-7"	-	-	-	-	-	-	Pier Cap Top Face
ICP970	1	39'-5"	S	-	1'-7"	36'-3"	1'-7"	-	-	-	-	-	-	Pier Cap Top Face
ICP595	5	11'-4"	HB	1'-0"	2'-0"	2'-8"	2'-0"	2'-8"	-	1'-0"	-	-	-	Bearing Pedestal Hoop
ICP596	7	12'-8"	HB	1'-0"	2'-8"	2'-8"	2'-8"	2'-8"	-	1'-0"	-	-	-	Bearing Pedestal Hoop
ICP597	24	7'-0"	S	-	2'-7"	1'-10"	2'-7"	-	-	-	-	-	-	Bearing Pedestal Stirrup
ICP598	48	7'-10"	S	-	2'-8"	2'-6"	2'-8"	-	-	-	-	-	-	Bearing Pedestal Stirrup
ICP650	16	8'-0"	S	-	2'-9"	2'-6"	2'-9"	-	-	-	-	-	-	Bearing Pedestal Stirrup

TYPE - BENDING DIAGRAMS

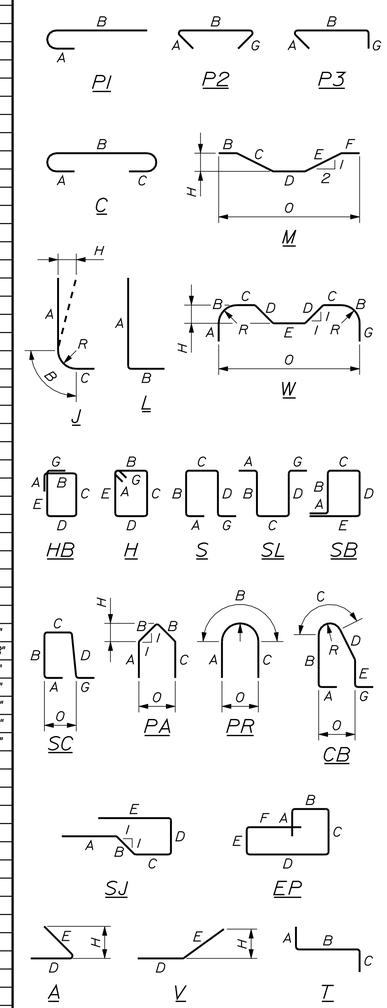

All dimensions are out-to-out of bar.

Bending details and hooks shall conform to the recommendations of the current revision of ACI Standard 315 and ACI Standard 318.

Reinforcing Bar: ASTM A 615/A 615M, Grade 60

GENERAL NOTES

1. The first two digits following the letter(s) of the mark indicate the size of the bar:

   Mark "A502" = bar size #5
   Mark "P805" = bar size #8
   Mark "S650" = bar size #6

2. Each crank bar, Type B, may be replaced by two (2) straight bars (one top and one bottom) of the same bar size as the crank bar. Payment in either case will be based on crank bars as scheduled on the plans.

STATE OF MAINE
DEPARTMENT OF TRANSPORTATION

AC-BH-1267(400)

WIN 12674.00

BRIDGE NO. 2506

BRIDGE PLANS

PROJ. MANAGER	N. Benoit	DATE
DESIGN-DETAILED	B. Nichols	Feb. 2013
CHECKED-REVIEWED	------	------
DESIGN2-DETAILED2	------	------
DESIGN3-DETAILED3	------	------
REVISIONS 1	------	------
REVISIONS 2	------	------
REVISIONS 3	------	------
REVISIONS 4	------	------
FIELD CHANGES	------	------

SIGNATURE

P.E. NUMBER

DATE

MAINE KENNEBEC BRIDGE
KENNEBEC RIVER
RICHMOND, SAGADAHOC CTY. DRESDEN, LINCOLN CTY.

PIER NO. 1 REINFORCING STEEL SCHEDULE

SHEET NUMBER

198

OF 238

Filename: ...\msta\198_Rebar_Pier1.dgn Division: BRIDGE Username: dana.damren Date:4/10/2013

STRAIGHT BARS

MARK	QTY.	LENGTH	LOCATION	MARK	QTY.	LENGTH	LOCATION
2P800	22	29'-6"	Dist. Slab - Top Mat	2P700	2	19'-1"	Horiz -Pier Cap Face
2P801	56	5'-0"	Dist. Slab - Dowel	2P701	2	24'-4"	Horiz -Pier Cap Face
2P802	30	21'-6"	Dist. Slab - Top Mat	2P702	2	26'-0"	Horiz -Pier Cap Face
				2P703	2	26'-4"	Horiz -Pier Cap Face
2P900	32	29'-6"	Dist. Slab - Bottom Mat	2P704	2	26'-6"	Horiz -Pier Cap Face
				2P705	2	26'-8"	Horiz -Pier Cap Face
2P1000	64	21'-6"	Dist. Slab - Bottom Mat	2P706	2	26'-9"	Horiz -Pier Cap Face
				2P707	2	26'-11"	Horiz -Pier Cap Face
2P400	8	11'-8"	Support for Int. Shaft Vert.	2P708	2	27'-0"	Horiz -Pier Cap Face
2P401	6	10'-9"	Support for Int. Shaft Vert.	2P709	2	27'-2"	Horiz -Pier Cap Face
2P402	4	9'-10"	Support for Int. Shaft Vert.	2P710	2	27'-3"	Horiz -Pier Cap Face
2P403	6	8'-11"	Support for Int. Shaft Vert.	2P711	2	27'-5"	Horiz -Pier Cap Face
2P404	4	8'-0"	Support for Int. Shaft Vert.				
2P405	6	7'-1"	Support for Int. Shaft Vert.	2P901	2	30'-8"	Horiz -Pier Cap Top
2P406	4	6'-2"	Support for Int. Shaft Vert.	2P902	2	32'-7"	Horiz -Pier Cap Top
2P407	10	5'-3"	Support for Int. Shaft Vert.	2P903	2	33'-8"	Horiz -Pier Cap Top
				2P904	2	34'-6"	Horiz -Pier Cap Top
2P1100	22	32'-3"	Shaft Vertical	2P905	2	35'-0"	Horiz -Pier Cap Top
2P1101	22	33'-3"	Shaft Vertical	2P906	2	35'-4"	Horiz -Pier Cap Top
2P1102	4	18'-5"	Shaft Vertical	2P907	2	35'-6"	Horiz -Pier Cap Top
2P1103	4	19'-5"	Shaft Vertical				
2P1104	4	11'-10"	Shaft Vertical				
2P1105	4	10'-10"	Shaft Vertical				
2P1106	4	24'-5"	Shaft Vertical				
2P1107	22	33'-4"	Shaft Vertical				
2P1108	20	32'-4"	Shaft Vertical				

BENT BARS

MARK	QTY.	LENGTH	TYPE	A	B	C	D	E	F	G	H	O	R	LOCATION
2P550	104	9'-2"	S	-	1'-10"	5'-6"	1'-10"	-	-	-	-	-	-	Dist. Slab End Vert.
2P551	10	33'-2"	S	-	1'-10"	29'-6"	1'-10"	-	-	-	-	-	-	Dist. Slab End Horiz.
2P552	10	25'-2"	S	-	1'-10"	21'-6"	1'-10"	-	-	-	-	-	-	Dist. Slab End Horiz.
2P450	8	20'-1"	S	-	6'-9"	6'-7"	6'-9"	-	-	-	-	-	-	Support for Interior Shaft Vert.
2P451	6	19'-3"	S	-	6'-4"	6'-7"	6'-4"	-	-	-	-	-	-	Support for Interior Shaft Vert.
2P452	4	18'-3"	S	-	5'-10"	6'-7"	5'-10"	-	-	-	-	-	-	Support for Interior Shaft Vert.
2P453	6	17'-5"	S	-	5'-5"	6'-7"	5'-5"	-	-	-	-	-	-	Support for Interior Shaft Vert.
2P454	4	16'-5"	S	-	4'-11"	6'-7"	4'-11"	-	-	-	-	-	-	Support for Interior Shaft Vert.
2P455	6	15'-7"	S	-	4'-6"	6'-7"	4'-6"	-	-	-	-	-	-	Support for Interior Shaft Vert.
2P456	4	14'-7"	S	-	4'-0"	6'-7"	4'-0"	-	-	-	-	-	-	Support for Interior Shaft Vert.
2P457	10	13'-9"	S	-	3'-7"	6'-7"	3'-7"	-	-	-	-	-	-	Support for Interior Shaft Vert.
2P553	949	8'-6"	P3	0'-6"	7'-5"	-	-	-	-	0'-7"	-	-	-	Shaft Sets "2A" through "2G"
2P554	182	8'-5"	P2	0'-6"	7'-5"	-	-	-	-	0'-6"	-	-	-	Shaft Sets "2A" through "2F"
2P555	206	8'-2"	P2	0'-6"	7'-2"	-	-	-	-	0'-6"	-	-	-	Shaft Sets "2A" through "2G"
2P556	206	7'-3"	P2	0'-6"	6'-3"	-	-	-	-	0'-6"	-	-	-	Shaft Sets "2A" through "2G"
2P557	158	6'-10"	P1	0'-6"	6'-4"	-	-	-	-	-	-	-	-	Shaft Sets "2A" through "2D"
2P558	632	4'-2"	P1	0'-6"	3'-8"	-	-	-	-	-	-	-	-	Shaft Sets "2A" through "2D"
2P559	36	8'-0"	P1	0'-6"	7'-6"	-	-	-	-	-	-	-	-	Shaft Set "2E"
2P560	108	7'-1"	P1	0'-6"	6'-7"	-	-	-	-	-	-	-	-	Shaft Set "2F"
2P561	144	6'-2"	P1	0'-6"	5'-8"	-	-	-	-	-	-	-	-	Shaft Set "2G"
2P562	42	25'-6"	PR	6'-11"	11'-8"	6'-11"	-	-	-	-	-	7'-5"	3'-9"	Shaft Set "2A"
2P563	54	24'-6"	PR	6'-5"	11'-8"	6'-5"	-	-	-	-	-	7'-5"	3'-9"	Shaft Set "2B"
2P564	36	22'-8"	PR	5'-6"	11'-8"	5'-6"	-	-	-	-	-	7'-5"	3'-9"	Shaft Set "2C"
2P565	32	20'-10"	PR	4'-7"	11'-8"	4'-7"	-	-	-	-	-	7'-5"	3'-9"	Shaft Sets "2D" & "2E"
2P566	18	19'-0"	PR	3'-8"	11'-8"	3'-8"	-	-	-	-	-	7'-5"	3'-9"	Shaft Set "2F"
2P567	24	18'-6"	PR	3'-5"	11'-8"	3'-5"	-	-	-	-	-	7'-5"	3'-9"	Shaft Set "2G"
2P568	42	13'-9"	P1	0'-6"	13'-3"	-	-	-	-	-	-	-	-	Shaft Set "2A"
2P569	54	13'-3"	P1	0'-6"	12'-9"	-	-	-	-	-	-	-	-	Shaft Set "2B"
2P570	36	11'-5"	P1	0'-6"	10'-11"	-	-	-	-	-	-	-	-	Shaft Set "2C"
2P571	32	9'-7"	P1	0'-6"	9'-1"	-	-	-	-	-	-	-	-	Shaft Set "2D"
2P1150	54	40'-3"	L	2'-0"	38'-3"	-	-	-	-	-	-	-	-	Shaft Vertical
2P1151	52	39'-3"	L	2'-0"	37'-3"	-	-	-	-	-	-	-	-	Shaft Vertical
2P1152	8	43'-6"	L	2'-0"	41'-6"	-	-	-	-	-	-	-	-	Shaft Vertical
2P1153	8	36'-0"	L	2'-0"	34'-0"	-	-	-	-	-	-	-	-	Shaft Vertical
2P1154	8	28'-5"	L	2'-0"	26'-5"	-	-	-	-	-	-	-	-	Shaft Vertical
2P1155	8	20'-10"	L	2'-0"	18'-10"	-	-	-	-	-	-	-	-	Shaft Vertical
2P1156	8	13'-3"	L	2'-0"	11'-3"	-	-	-	-	-	-	-	-	Shaft Vertical
2P572	76	14'-2"	S	-	5'-7"	3'-0"	5'-7"	-	-	-	-	-	-	Pier Cap Shear Stirr. - Set "2H"
2P573	40	14'-0"	S	-	5'-6"	3'-0"	5'-6"	-	-	-	-	-	-	Pier Cap Shear Stirr. - Set "2J"
2P574	32	13'-6"	S	-	5'-3"	3'-0"	5'-3"	-	-	-	-	-	-	Pier Cap Shear Stirr. - Set "2K"
2P575	32	12'-10"	S	-	4'-11"	3'-0"	4'-11"	-	-	-	-	-	-	Pier Cap Shear Stirr. - Set "2L"
2P576	32	12'-2"	S	-	4'-7"	3'-0"	4'-7"	-	-	-	-	-	-	Pier Cap Shear Stirr. - Set "2M"
2P577	24	11'-3"	S	-	4'-3"	2'-9"	4'-3"	-	-	-	-	-	-	Pier Cap Shear Stirr. - Set "2N"
2P578	16	9'-3"	S	-	3'-11"	1'-5"	3'-11"	-	-	-	-	-	-	Pier Cap Shear Stirr. - Set "2P"
2P579	38	15'-8"	S	-	5'-7"	4'-6"	5'-7"	-	-	-	-	-	-	Pier Cap Shear Stirr. - Set "2H"
2P580	20	15'-6"	S	-	5'-6"	4'-6"	5'-6"	-	-	-	-	-	-	Pier Cap Shear Stirr. - Set "2J"
2P581	16	15'-0"	S	-	5'-3"	4'-6"	5'-3"	-	-	-	-	-	-	Pier Cap Shear Stirr. - Set "2K"
2P582	16	14'-4"	S	-	4'-11"	4'-6"	4'-11"	-	-	-	-	-	-	Pier Cap Shear Stirr. - Set "2L"
2P583	16	13'-8"	S	-	4'-7"	4'-6"	4'-7"	-	-	-	-	-	-	Pier Cap Shear Stirr. - Set "2M"
2P584	12	13'-0"	S	-	4'-3"	4'-6"	4'-3"	-	-	-	-	-	-	Pier Cap Shear Stirr. - Set "2N"
2P585	10	10'-5"	S	-	3'-11"	2'-7"	3'-11"	-	-	-	-	-	-	Pier Cap Shear Stirr. - Set "2P"
2P750	16	17'-2"	PR	2'-9"	11'-8"	2'-9"	-	-	-	-	-	7'-5"	3'-9"	Pier Cap - End Stirup
2P950	4	17'-5"	V	-	-	-	8'-7"	8'-10"	-	-	2'-9"	-	-	Pier Cap - Horiz - Bott. Face
2P951	4	18'-9"	V	-	-	-	8'-7"	10'-2"	-	-	3'-2"	-	-	Pier Cap - Horiz - Bott. Face
2P952	4	19'-5"	V	-	-	-	8'-7"	10'-10"	-	-	3'-5"	-	-	Pier Cap - Horiz - Bott. Face
2P953	4	19'-10"	V	-	-	-	8'-7"	11'-3"	-	-	3'-6"	-	-	Pier Cap - Horiz - Bott. Face
2P954	4	19'-11"	V	-	-	-	8'-7"	11'-4"	-	-	3'-7"	-	-	Pier Cap - Horiz - Bott. Face
2P955	2	20'-0"	V	-	-	-	8'-7"	11'-5"	-	-	3'-8"	-	-	Pier Cap - Horiz - Bott. Face
2P956	2	33'-10"	S	-	1'-7"	30'-8"	1'-7"	-	-	-	-	-	-	Pier Cap - Horiz - Top Face
2P957	2	35'-9"	S	-	1'-7"	32'-7"	1'-7"	-	-	-	-	-	-	Pier Cap - Horiz - Top Face
2P958	2	36'-10"	S	-	1'-7"	33'-8"	1'-7"	-	-	-	-	-	-	Pier Cap - Horiz - Top Face
2P959	2	37'-8"	S	-	1'-7"	34'-6"	1'-7"	-	-	-	-	-	-	Pier Cap - Horiz - Top Face
2P960	2	38'-2"	S	-	1'-7"	35'-0"	1'-7"	-	-	-	-	-	-	Pier Cap - Horiz - Top Face
2P961	2	38'-6"	S	-	1'-7"	35'-4"	1'-7"	-	-	-	-	-	-	Pier Cap - Horiz - Top Face
2P962	2	38'-8"	S	-	1'-7"	35'-6"	1'-7"	-	-	-	-	-	-	Pier Cap - Horiz - Top Face
2P586	56	7'-8"	S	-	2'-4"	3'-0"	2'-4"	-	-	-	-	-	-	Bearing Pedestal Stirrup
2P587	4	14'-8"	HB	1'-0"	3'-2"	3'-2"	3'-2"	3'-2"	-	1'-0"	-	-	-	Bearing Pedestal Hoop

TYPE - BENDING DIAGRAMS

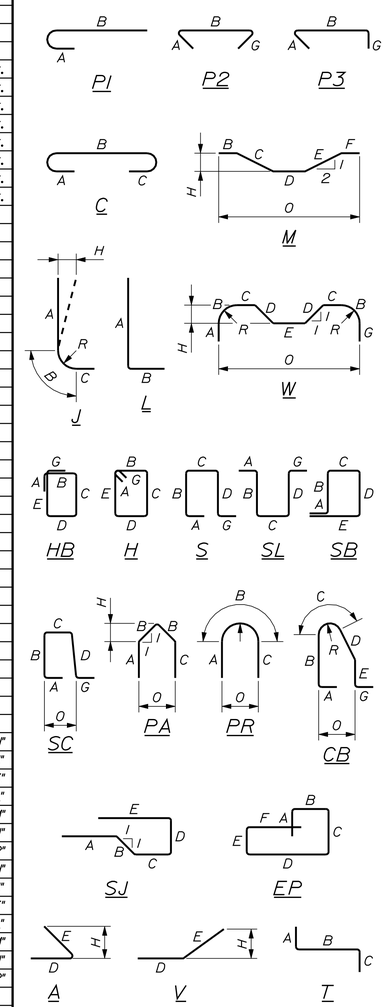

All dimensions are out-to-out of bar.

Bending details and hooks shall conform to the recommendations of the current revision of ACI Standard 315 and ACI Standard 318.

Reinforcing Bar: ASTM A 615/A 615M, Grade 60

GENERAL NOTES

1. The first two digits following the letter(s) of the mark indicate the size of the bar:

   Mark "A502" = bar size #5
   Mark "P805" = bar size #8
   Mark "S650" = bar size #6

2. Each crank bar, Type B, may be replaced by two (2) straight bars (one top and one bottom) of the same bar size as the crank bar. Payment in either case will be based on crank bars as scheduled on the plans.

STATE OF MAINE
DEPARTMENT OF TRANSPORTATION

AC-BH-1267(400)

WIN 12674.00

BRIDGE NO. 2506

BRIDGE PLANS

	BY	DATE
PROJ. MANAGER	N. Benoit	
DESIGN-DETAILED	B. Nichols	Feb. 2013
CHECKED-REVIEWED	------	------
DESIGN2-DETAILED2	------	------
DESIGN3-DETAILED3	------	------
REVISIONS 1	------	------
REVISIONS 2	------	------
REVISIONS 3	------	------
REVISIONS 4	------	------
FIELD CHANGES	------	------

SIGNATURE

P.E. NUMBER

DATE

MAINE KENNEBEC BRIDGE
KENNEBEC RIVER
RICHMOND, SAGADAHOC CTY. DRESDEN, LINCOLN CTY.

PIER NO. 2 REINFORCING STEEL SCHEDULE

SHEET NUMBER

199

OF 238

Filename: ...\MSTA\199_Rebar_Pier2.dgn Division: BRIDGE Username: dana.damren Date:3/27/2013

STRAIGHT BARS

MARK	QTY.	LENGTH	LOCATION	MARK	QTY.	LENGTH	LOCATION
3P800	22	33'-6"	Dist. Slab - Top Mat	3P700	2	19'-1"	Horiz -Pier Cap Face
3P801	60	5'-0"	Dist. Slab - Dowel	3P701	2	24'-4"	Horiz -Pier Cap Face
3P802	34	21'-6"	Dist. Slab - Top Mat	3P702	2	26'-0"	Horiz -Pier Cap Face
				3P703	2	26'-4"	Horiz -Pier Cap Face
3P900	34	33'-6"	Dist. Slab - Bottom Mat	3P704	2	26'-6"	Horiz -Pier Cap Face
3P1000	65	21'-6"	Dist. Slab - Bottom Mat	3P705	2	26'-8"	Horiz -Pier Cap Face
				3P706	2	26'-9"	Horiz -Pier Cap Face
3P400	10	14'-6"	Support for Int. Shaft Vert.	3P707	2	26'-11"	Horiz -Pier Cap Face
3P401	6	13'-6"	Support for Int. Shaft Vert.	3P708	2	27'-0"	Horiz -Pier Cap Face
3P402	6	12'-5"	Support for Int. Shaft Vert.	3P709	2	27'-2"	Horiz -Pier Cap Face
3P403	6	11'-5"	Support for Int. Shaft Vert.	3P710	2	27'-3"	Horiz -Pier Cap Face
3P404	4	10'-4"	Support for Int. Shaft Vert.	3P711	2	27'-5"	Horiz -Pier Cap Face
3P405	6	9'-4"	Support for Int. Shaft Vert.				
3P406	6	8'-3"	Support for Int. Shaft Vert.	3P901	2	30'-8"	Horiz -Pier Cap Top
3P407	6	7'-3"	Support for Int. Shaft Vert.	3P902	2	32'-7"	Horiz -Pier Cap Top
3P408	6	6'-2"	Support for Int. Shaft Vert.	3P903	2	33'-8"	Horiz -Pier Cap Top
3P409	3	5'-2"	Support for Int. Shaft Vert.	3P904	2	34'-6"	Horiz -Pier Cap Top
				3P905	2	35'-0"	Horiz -Pier Cap Top
3P1100	22	41'-0"	Shaft Vertical	3P906	2	35'-4"	Horiz -Pier Cap Top
3P1101	22	42'-0"	Shaft Vertical	3P907	2	35'-6"	Horiz -Pier Cap Top
3P1102	4	26'-10"	Shaft Vertical				
3P1103	4	27'-10"	Shaft Vertical				
3P1104	4	19'-7"	Shaft Vertical				
3P1105	4	18'-7"	Shaft Vertical				
3P1106	4	10'-2"	Shaft Vertical				
3P1107	4	11'-2"	Shaft Vertical				
3P1108	4	33'-4"	Shaft Vertical				
3P1109	22	42'-5"	Shaft Vertical				
3P1110	20	41'-5"	Shaft Vertical				

BENT BARS

MARK	QTY.	LENGTH	TYPE	A	B	C	D	E	F	G	H	O	R	LOCATION
3P550	112	9'-2"	S	-	1'-10"	5'-6"	1'-10"	-	-	-	-	-	-	Dist. Slab End Vert.
3P551	10	37'-2"	S	-	1'-10"	33'-6"	1'-10"	-	-	-	-	-	-	Dist. Slab End Horiz.
3P552	10	25'-2"	S	-	1'-10"	21'-6"	1'-10"	-	-	-	-	-	-	Dist. Slab End Horiz.
3P553	1248	8'-6"	P3	0'-6"	7'-5"	-	-	-	-	0'-7"	-	-	-	Shaft Sets "3A" through "3H"
3P554	220	8'-5"	P2	0'-6"	7'-5"	-	-	-	-	0'-6"	-	-	-	Shaft Sets "3A" through "3G"
3P555	244	8'-2"	P2	0'-6"	7'-2"	-	-	-	-	0'-6"	-	-	-	Shaft Sets "3A" through "3H"
3P556	244	7'-3"	P2	0'-6"	6'-3"	-	-	-	-	0'-6"	-	-	-	Shaft Sets "3A" through "3H"
3P557	198	6'-10"	P1	0'-6"	6'-4"	-	-	-	-	-	-	-	-	Shaft Sets "3A" through "3E"
3P558	792	4'-2"	P1	0'-6"	3'-8"	-	-	-	-	-	-	-	-	Shaft Sets "3A" through "3E"
3P559	8	8'-1"	P1	0'-6"	7'-7"	-	-	-	-	-	-	-	-	Shaft Set "3F"
3P560	80	7'-2"	P1	0'-6"	6'-8"	-	-	-	-	-	-	-	-	Shaft Set "3G"
3P561	96	6'-3"	P1	0'-6"	5'-9"	-	-	-	-	-	-	-	-	Shaft Set "3H"
3P562	42	28'-3"	PR	8'-4"	11'-8"	8'-3"	-	-	-	-	-	7'-5"	3'-9"	Shaft Set "3A"
3P563	56	26'-2"	PR	7'-3"	11'-8"	7'-3"	-	-	-	-	-	7'-5"	3'-9"	Shaft Set "3B"
3P564	34	24'-0"	PR	6'-2"	11'-8"	6'-2"	-	-	-	-	-	7'-5"	3'-9"	Shaft Set "3C"
3P565	34	21'-10"	PR	5'-1"	11'-8"	5'-1"	-	-	-	-	-	7'-5"	3'-9"	Shaft Set "3D"
3P566	34	19'-8"	PR	4'-0"	11'-8"	4'-0"	-	-	-	-	-	7'-5"	3'-9"	Shaft Sets "3E" & "3F"
3P567	22	18'-8"	PR	3'-6"	11'-8"	3'-6"	-	-	-	-	-	7'-5"	3'-9"	Shaft Set "3G" & "3H"
3P568	42	17'-2"	P1	0'-6"	16'-8"	-	-	-	-	-	-	-	-	Shaft Set "3A"
3P569	56	16'-2"	P1	0'-6"	15'-8"	-	-	-	-	-	-	-	-	Shaft Set "3B"
3P570	34	15'-1"	P1	0'-6"	14'-7"	-	-	-	-	-	-	-	-	Shaft Set "3C"
3P571	34	14'-1"	P1	0'-6"	13'-7"	-	-	-	-	-	-	-	-	Shaft Set "3D"
3P572	32	13'-0"	P1	0'-6"	12'-6"	-	-	-	-	-	-	-	-	Shaft Set "3E"
3P1150	58	53'-4"	L	2'-0"	51'-4"	-	-	-	-	-	-	-	-	Shaft Vertical
3P1151	56	52'-4"	L	2'-0"	50'-4"	-	-	-	-	-	-	-	-	Shaft Vertical
3P1152	8	55'-4"	L	2'-0"	53'-4"	-	-	-	-	-	-	-	-	Shaft Vertical
3P1153	8	47'-1"	L	2'-0"	45'-2"	-	-	-	-	-	-	-	-	Shaft Vertical
3P1154	8	38'-10"	L	2'-0"	36'-10"	-	-	-	-	-	-	-	-	Shaft Vertical
3P1155	8	30'-6"	L	2'-0"	28'-7"	-	-	-	-	-	-	-	-	Shaft Vertical
3P1156	8	22'-3"	L	2'-0"	20'-4"	-	-	-	-	-	-	-	-	Shaft Vertical
3P1157	8	14'-0"	L	2'-0"	12'-0"	-	-	-	-	-	-	-	-	Shaft Vertical
3P573	76	14'-2"	S	-	5'-7"	3'-0"	5'-7"	-	-	-	-	-	-	Pier Cap Shear Stirr. - Set "3J"
3P574	40	14'-0"	S	-	5'-6"	3'-0"	5'-6"	-	-	-	-	-	-	Pier Cap Shear Stirr. - Set "3K"
3P575	32	13'-6"	S	-	5'-3"	3'-0"	5'-3"	-	-	-	-	-	-	Pier Cap Shear Stirr. - Set "3L"
3P576	32	12'-10"	S	-	4'-11"	3'-0"	4'-11"	-	-	-	-	-	-	Pier Cap Shear Stirr. - Set "3M"
3P577	32	12'-2"	S	-	4'-7"	3'-0"	4'-7"	-	-	-	-	-	-	Pier Cap Shear Stirr. - Set "3N"
3P578	24	11'-3"	S	-	4'-3"	2'-9"	4'-3"	-	-	-	-	-	-	Pier Cap Shear Stirr. - Set "3P"
3P579	16	9'-3"	S	-	3'-11"	1'-5"	3'-11"	-	-	-	-	-	-	Pier Cap Shear Stirr. - Set "3Q"
3P580	38	15'-8"	S	-	5'-7"	4'-6"	5'-7"	-	-	-	-	-	-	Pier Cap Shear Stirr. - Set "3J"
3P581	20	15'-6"	S	-	5'-6"	4'-6"	5'-6"	-	-	-	-	-	-	Pier Cap Shear Stirr. - Set "3K"
3P582	16	15'-0"	S	-	5'-3"	4'-6"	5'-3"	-	-	-	-	-	-	Pier Cap Shear Stirr. - Set "3L"
3P583	16	14'-4"	S	-	4'-11"	4'-6"	4'-11"	-	-	-	-	-	-	Pier Cap Shear Stirr. - Set "3M"
3P584	16	13'-8"	S	-	4'-7"	4'-6"	4'-7"	-	-	-	-	-	-	Pier Cap Shear Stirr. - Set "3N"
3P585	12	13'-0"	S	-	4'-3"	4'-6"	4'-3"	-	-	-	-	-	-	Pier Cap Shear Stirr. - Set "3P"
3P586	10	10'-5"	S	-	3'-11"	2'-7"	3'-11"	-	-	-	-	-	-	Pier Cap Shear Stirr. - Set "3Q"
3P750	16	17'-2"	PR	2'-9"	11'-8"	2'-9"	-	-	-	-	-	7'-5"	3'-9"	Pier Cap - End Stirup
3P950	4	17'-5"	V	-	-	-	8'-7"	8'-10"	-	-	2'-9"	-	-	Pier Cap - Horiz - Bott. Face
3P951	4	18'-9"	V	-	-	-	8'-7"	10'-2"	-	-	3'-2"	-	-	Pier Cap - Horiz - Bott. Face
3P952	4	19'-5"	V	-	-	-	8'-7"	10'-10"	-	-	3'-5"	-	-	Pier Cap - Horiz - Bott. Face
3P953	4	19'-9"	V	-	-	-	8'-7"	11'-3"	-	-	3'-6"	-	-	Pier Cap - Horiz - Bott. Face
3P954	4	19'-11"	V	-	-	-	8'-7"	11'-4"	-	-	3'-7"	-	-	Pier Cap - Horiz - Bott. Face
3P955	2	20'-0"	V	-	-	-	8'-7"	11'-5"	-	-	3'-8"	-	-	Pier Cap - Horiz - Bott. Face
3P956	2	33'-10"	S	-	1'-7"	30'-8"	1'-7"	-	-	-	-	-	-	Pier Cap - Horiz - Top Face
3P957	2	35'-9"	S	-	1'-7"	32'-7"	1'-7"	-	-	-	-	-	-	Pier Cap - Horiz - Top Face
3P958	2	36'-10"	S	-	1'-7"	33'-8"	1'-7"	-	-	-	-	-	-	Pier Cap - Horiz - Top Face
3P959	2	37'-8"	S	-	1'-7"	34'-6"	1'-7"	-	-	-	-	-	-	Pier Cap - Horiz - Top Face
3P960	2	38'-2"	S	-	1'-7"	35'-0"	1'-7"	-	-	-	-	-	-	Pier Cap - Horiz - Top Face
3P961	2	38'-6"	S	-	1'-7"	35'-4"	1'-7"	-	-	-	-	-	-	Pier Cap - Horiz - Top Face
3P962	2	38'-8"	S	-	1'-7"	35'-6"	1'-7"	-	-	-	-	-	-	Pier Cap - Horiz - Top Face
3P587	56	7'-8"	S	-	2'-4"	3'-0"	2'-4"	-	-	-	-	-	-	Bearing Pedestal Stirrup
3P588	4	14'-8"	HB	1'-0"	3'-2"	3'-2"	3'-2"	3'-2"	-	1'-0"	-	-	-	Bearing Pedestal Hoop

TYPE - BENDING DIAGRAMS

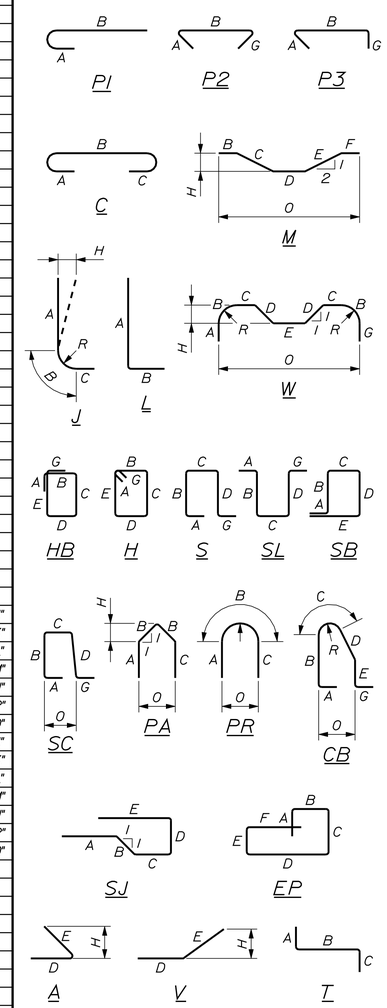

All dimensions are out-to-out of bar.

Bending details and hooks shall conform to the recommendations of the current revision of ACI Standard 315 and ACI Standard 318.

Reinforcing Bar: ASTM A 615/A 615M, Grade 60

GENERAL NOTES

1. The first two digits following the letter(s) of the mark indicate the size of the bar:

   Mark "A502" = bar size #5
   Mark "P805" = bar size #8
   Mark "S650" = bar size #6

2. Each crank bar, Type B, may be replaced by two (2) straight bars (one top and one bottom) of the same bar size as the crank bar. Payment in either case will be based on crank bars as scheduled on the plans.

STATE OF MAINE
DEPARTMENT OF TRANSPORTATION

AC-BH-1267(400)

WIN 12674.00

BRIDGE PLANS

BRIDGE NO. 2506

PROJ. MANAGER	N. Benoit	BY	DATE
DESIGN-DETAILED	B. Nichols	B. Nichols	Feb. 2013
CHECKED-REVIEWED	------	------	------
DESIGN2-DETAILED2	------	------	------
DESIGN3-DETAILED3	------	------	------
REVISIONS 1	------	------	------
REVISIONS 2	------	------	------
REVISIONS 3	------	------	------
REVISIONS 4	------	------	------
FIELD CHANGES	------	------	------

SIGNATURE

P.E. NUMBER

DATE

MAINE KENNEBEC BRIDGE
KENNEBEC RIVER
RICHMOND, SAGADAHOC CTY. DRESDEN, LINCOLN CTY.

PIER NO. 3 REINFORCING STEEL SCHEDULE

SHEET NUMBER

200

OF 238

Filename: ...\MSTA\200_Rebar_Pier3.dgn Division: BRIDGE Username: dana.damren Date:3/27/2013

STRAIGHT BARS

MARK	QTY.	LENGTH	LOCATION	MARK	QTY.	LENGTH	LOCATION
4P800	29	37'-6"	Distribution Slab (Top. Mat).	4P700	2	19'-1"	Cap Face Horiz
4P801	38	28'-6"	Distribution Slab (Top. Mat).	4P701	2	24'-4"	Cap Face Horiz
				4P702	2	26'-0"	Cap Face Horiz
4P900	12	4'-9"	Slab Set "4A"	4P703	2	26'-4"	Cap Face Horiz
4P901	24	5'-4"	Slab Set "4A"	4P704	2	26'-6"	Cap Face Horiz
4P902	72	4'-3"	Slab Set "4B"	4P705	2	26'-8"	Cap Face Horiz
				4P706	2	26'-9"	Cap Face Horiz
4P1000	60	28'-6"	Distribution Slab (Bott. Mat).	4P707	2	26'-11"	Cap Face Horiz
4P1001	75	4'-8"	Slab Set "4C" & "4D"	4P708	2	27'-0"	Cap Face Horiz
4P1002	30	4'-1"	Slab Set "4D"	4P709	2	27'-2"	Cap Face Horiz
				4P710	2	27'-3"	Cap Face Horiz
4P400	8	13'-9"	Support for Int. Shaft Vert.	4P711	2	27'-5"	Cap Face Horiz
4P401	8	12'-8"	Support for Int. Shaft Vert.				
4P402	4	11'-7"	Support for Int. Shaft Vert.	4P903	2	30'-8"	Pier Cap Top Face
4P403	6	10'-6"	Support for Int. Shaft Vert.	4P904	2	32'-7"	Pier Cap Top Face
4P404	6	9'-5"	Support for Int. Shaft Vert.	4P905	2	33'-8"	Pier Cap Top Face
4P405	6	8'-4"	Support for Int. Shaft Vert.	4P906	2	34'-6"	Pier Cap Top Face
4P406	6	7'-3"	Support for Int. Shaft Vert.	4P907	2	35'-0"	Pier Cap Top Face
4P407	6	6'-2"	Support for Int. Shaft Vert.	4P908	2	35'-4"	Pier Cap Top Face
4P408	4	5'-1"	Support for Int. Shaft Vert.	4P909	2	35'-6"	Pier Cap Top Face
4P1100	22	39'-0"	Shaft Vertical				
4P1101	22	40'-0"	Shaft Vertical				
4P1102	4	24'-5"	Shaft Vertical				
4P1103	4	25'-5"	Shaft Vertical				
4P1104	4	16'-9"	Shaft Vertical				
4P1105	4	15'-9"	Shaft Vertical				
4P1106	4	7'-2"	Shaft Vertical				
4P1107	4	8'-2"	Shaft Vertical				
4P1108	4	31'-4"	Shaft Vertical				
4P1109	22	39'-5"	Shaft Vertical				
4P1110	20	40'-5"	Shaft Vertical				

BENT BARS

MARK	QTY.	LENGTH	TYPE	A	B	C	D	E	F	G	H	O	R	LOCATION
4P650	88	3'-1"	S	-	1'-0"	1'-1"	1'-0"	-	-	-	-	-	-	Dist. Slab - Bott. Mat
4P651	16	3'-8"	S	-	1'-0"	1'-8"	1'-0"	-	-	-	-	-	-	Dist. Slab - Bott. Mat
4P652	58	8'-6"	S	-	2'-2"	5'-4"	2'-2"	-	-	-	-	-	-	Dist. Slab End Vertical
4P653	12	32'-10"	S	-	2'-2"	28'-6"	2'-2"	-	-	-	-	-	-	Dist. Slab End Horiz.
4P654	12	41'-10"	S	-	2'-2"	37'-6"	2'-2"	-	-	-	-	-	-	Dist. Slab Face Horiz.
4P655	60	24'-6"	HB	1'-0"	6'-2"	5'-1"	6'-2"	5'-1"	-	1'-0"	-	-	-	Dist. Slab Shear Stirr. - Set "4E"
4P656	60	23'-2"	HB	1'-0"	5'-6"	5'-1"	5'-6"	5'-1"	-	1'-0"	-	-	-	Dist. Slab Shear Stirr. - Set "4E"
4P657	30	30'-2"	HB	1'-0"	9'-0"	5'-1"	9'-0"	5'-1"	-	1'-0"	-	-	-	Dist. Slab Shear Stirr. - Set "4E"
4P658	18	7'-6"	S	-	1'-0"	5'-6"	1'-0"	-	-	-	-	-	-	Dist. Slab Face Vertical
4P950	36	41'-2"	S	-	1'-10"	37'-6"	1'-10"	-	-	-	-	-	-	Dist. Slab - Bott. Mat
4P550	1119	8'-6"	P3	-	0'-6"	7'-5"	-	-	-	0'-7"	-	-	-	Shaft - Sets "4F" through "4L"
4P551	210	8'-5"	P2	-	0'-6"	7'-5"	-	-	-	0'-6"	-	-	-	Shaft - Sets "4F" through "4K"
4P552	234	8'-2"	P2	-	0'-6"	7'-2"	-	-	-	0'-6"	-	-	-	Shaft - Sets "4F" through "4L"
4P553	234	7'-3"	P2	-	0'-6"	6'-3"	-	-	-	0'-6"	-	-	-	Shaft - Sets "4F" through "4L"
4P554	188	6'-10"	PI	-	0'-6"	6'-4"	-	-	-	-	-	-	-	Shaft - Sets "4F" through "4J"
4P555	752	4'-2"	PI	-	0'-6"	3'-8"	-	-	-	-	-	-	-	Shaft - Sets "4F" through "4J"
4P556	132	8'-4"	PI	-	0'-6"	7'-10"	-	-	-	-	-	-	-	Shaft - Set "4K"
4P557	144	7'-3"	PI	-	0'-6"	6'-9"	-	-	-	-	-	-	-	Shaft - Set "4L"
4P558	74	27'-10"	PR	-	8'-1"	11'-8"	8'-1"	-	-	-	-	7'-5"	3'-9"	Shaft - Set "4F"
4P559	44	25'-8"	PR	-	7'-0"	11'-8"	7'-0"	-	-	-	-	7'-5"	3'-9"	Shaft - Set "4G"
4P560	36	23'-6"	PR	-	5'-11"	11'-8"	5'-11"	-	-	-	-	7'-5"	3'-9"	Shaft - Set "4H"
4P561	34	21'-4"	PR	-	4'-10"	11'-8"	4'-10"	-	-	-	-	7'-5"	3'-9"	Shaft - Set "4J"
4P562	22	19'-2"	PR	-	3'-9"	11'-8"	3'-9"	-	-	-	-	7'-5"	3'-9"	Shaft - Set "4K"
4P563	24	18'-6"	PR	-	3'-5"	11'-8"	3'-5"	-	-	-	-	7'-5"	3'-9"	Shaft - Set "4L"
4P564	74	16'-1"	PI	-	0'-6"	15'-7"	-	-	-	-	-	-	-	Shaft - Set "4F"
4P565	44	15'-0"	PI	-	0'-6"	14'-6"	-	-	-	-	-	-	-	Shaft - Set "4G"
4P566	36	13'-10"	PI	-	0'-6"	13'-4"	-	-	-	-	-	-	-	Shaft - Set "4H"
4P567	34	12'-9"	PI	-	0'-6"	12'-3"	-	-	-	-	-	-	-	Shaft - Set "4J"
4P1150	58	50'-7"	L	2'-0"	48'-7"	-	-	-	-	-	-	-	-	Shaft Vertical
4P1151	56	49'-7"	L	2'-0"	47'-7"	-	-	-	-	-	-	-	-	Shaft Vertical
4P1152	8	49'-0"	L	2'-0"	47'-0"	-	-	-	-	-	-	-	-	Shaft Vertical
4P1153	8	40'-4"	L	2'-0"	38'-4"	-	-	-	-	-	-	-	-	Shaft Vertical
4P1154	8	31'-8"	L	2'-0"	29'-8"	-	-	-	-	-	-	-	-	Shaft Vertical
4P1155	8	23'-0"	L	2'-0"	21'-0"	-	-	-	-	-	-	-	-	Shaft Vertical
4P1156	8	14'-4"	L	2'-0"	12'-4"	-	-	-	-	-	-	-	-	Shaft Vertical
4P568	76	14'-2"	S	-	5'-7"	3'-0"	5'-7"	-	-	-	-	-	-	Pier Cap - Set "4M"
4P569	40	14'-0"	S	-	5'-6"	3'-0"	5'-6"	-	-	-	-	-	-	Pier Cap - Set "4N"
4P570	32	13'-6"	S	-	5'-3"	3'-0"	5'-3"	-	-	-	-	-	-	Pier Cap - Set "4P"
4P571	32	12'-10"	S	-	4'-11"	3'-0"	4'-11"	-	-	-	-	-	-	Pier Cap - Set "4Q"
4P572	32	12'-2"	S	-	4'-7"	3'-0"	4'-7"	-	-	-	-	-	-	Pier Cap - Set "4R"
4P573	12	11'-3"	S	-	4'-3"	2'-9"	4'-3"	-	-	-	-	-	-	Pier Cap - Set "4S"
4P574	8	9'-3"	S	-	3'-11"	1'-5"	3'-11"	-	-	-	-	-	-	Pier Cap - Set "4T"
4P575	38	15'-8"	S	-	5'-7"	4'-6"	5'-7"	-	-	-	-	-	-	Pier Cap - Set "4M"
4P576	20	15'-6"	S	-	5'-6"	4'-6"	5'-6"	-	-	-	-	-	-	Pier Cap - Set "4N"
4P577	16	15'-0"	S	-	5'-3"	4'-6"	5'-3"	-	-	-	-	-	-	Pier Cap - Set "4P"
4P578	16	14'-4"	S	-	4'-11"	4'-6"	4'-11"	-	-	-	-	-	-	Pier Cap - Set "4Q"
4P579	16	13'-8"	S	-	4'-7"	4'-6"	4'-7"	-	-	-	-	-	-	Pier Cap - Set "4R"
4P580	6	13'-0"	S	-	4'-3"	4'-6"	4'-3"	-	-	-	-	-	-	Pier Cap - Set "4S"
4P581	4	10'-5"	S	-	3'-11"	2'-7"	3'-11"	-	-	-	-	-	-	Pier Cap - Set "4T"
4P750	16	17'-2"	PR	2'-9"	11'-8"	2'-9"	-	-	-	-	-	7'-6"	3'-9"	Pier Cap End Stirrup
4P951	4	17'-5"	V	-	-	-	8'-7"	8'-10"	-	-	2'-9"	-	-	Pier Cap Bottom
4P952	4	18'-9"	V	-	-	-	8'-7"	10'-2"	-	-	3'-2"	-	-	Pier Cap Bottom
4P953	4	19'-5"	V	-	-	-	8'-7"	10'-10"	-	-	3'-5"	-	-	Pier Cap Bottom
4P954	4	19'-10"	V	-	-	-	8'-7"	11'-3"	-	-	3'-6"	-	-	Pier Cap Bottom
4P955	4	19'-11"	V	-	-	-	8'-7"	11'-4"	-	-	3'-7"	-	-	Pier Cap Bottom
4P956	2	20'-0"	V	-	-	-	8'-7"	11'-5"	-	-	3'-8"	-	-	Pier Cap Bottom
4P957	2	33'-10"	S	-	1'-7"	30'-8"	1'-7"	-	-	-	-	-	-	Pier Cap Top Face
4P958	2	35'-9"	S	-	1'-7"	32'-7"	1'-7"	-	-	-	-	-	-	Pier Cap Top Face
4P959	2	36'-10"	S	-	1'-7"	33'-8"	1'-7"	-	-	-	-	-	-	Pier Cap Top Face
4P960	2	37'-8"	S	-	1'-7"	34'-6"	1'-7"	-	-	-	-	-	-	Pier Cap Top Face
4P961	2	38'-2"	S	-	1'-7"	35'-0"	1'-7"	-	-	-	-	-	-	Pier Cap Top Face
4P962	2	38'-6"	S	-	1'-7"	35'-4"	1'-7"	-	-	-	-	-	-	Pier Cap Top Face
4P963	2	38'-8"	S	-	1'-7"	35'-6"	1'-7"	-	-	-	-	-	-	Pier Cap Top Face
4P582	56	7'-8"	S	-	2'-4"	3'-0"	2'-4"	-	-	-	-	-	-	Bearing Pedestal Stirrup
4P583	4	14'-8"	HB	1'-0"	3'-2"	3'-2"	3'-2"	3'-2"	-	1'-0"	-	-	-	Bearing Pedestal Hoop

TYPE - BENDING DIAGRAMS

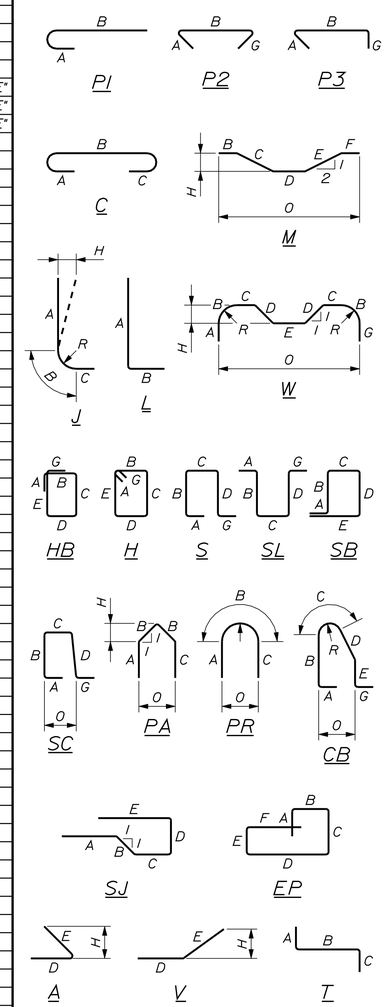

All dimensions are out-to-out of bar.

Bending details and hooks shall conform to the recommendations of the current revision of ACI Standard 315 and ACI Standard 318.

Reinforcing Bar: ASTM A 615/A 615M, Grade 60

GENERAL NOTES

1. The first two digits following the letter(s) of the mark indicate the size of the bar:

   Mark "A502" = bar size #5
   Mark "P805" = bar size #8
   Mark "S650" = bar size #6

2. Each crank bar, Type B, may be replaced by two (2) straight bars (one top and one bottom) of the same bar size as the crank bar. Payment in either case will be based on crank bars as scheduled on the plans.

STATE OF MAINE
DEPARTMENT OF TRANSPORTATION

AC-BH-1267(400)

WIN 12674.00

BRIDGE PLANS

BRIDGE NO. 2506

PROJ. MANAGER	N. Benoit	DATE
DESIGN-DETAILED	B. Nichols	Feb. 2013
CHECKED-REVIEWED	------	------
DESIGN2-DETAILED2	------	------
DESIGN3-DETAILED3	------	------
REVISIONS 1	------	------
REVISIONS 2	------	------
REVISIONS 3	------	------
REVISIONS 4	------	------
FIELD CHANGES	------	------

SIGNATURE

P.E. NUMBER

DATE

MAINE KENNEBEC BRIDGE
KENNEBEC RIVER
RICHMOND, SAGADAHOC CTY. DRESDEN, LINCOLN CTY.

PIER NO. 4 REINFORCING STEEL SCHEDULE

SHEET NUMBER

201

OF 238

Filename: ...\MSTA\201_Rebar_Pier4.dgn Division: BRIDGE Username: dana.damren Date:3/27/2013

STRAIGHT BARS

MARK	QTY.	LENGTH	LOCATION	MARK	QTY.	LENGTH	LOCATION
5P800	22	29'-6"	Dist. Slab - Top Mat	5P700	2	19'-1"	Horiz -Pier Cap Face
5P801	48	5'-0"	Dist. Slab - Dowel	5P701	2	24'-4"	Horiz -Pier Cap Face
5P802	30	21'-6"	Dist. Slab - Top Mat	5P702	2	26'-0"	Horiz -Pier Cap Face
				5P703	2	26'-4"	Horiz -Pier Cap Face
5P900	34	29'-6"	Dist. Slab - Bottom Mat	5P704	2	26'-6"	Horiz -Pier Cap Face
				5P705	2	26'-8"	Horiz -Pier Cap Face
5P1000	60	21'-6"	Dist. Slab - Bottom Mat	5P706	2	26'-9"	Horiz -Pier Cap Face
				5P707	2	26'-11"	Horiz -Pier Cap Face
5P400	8	12'-4"	Support for Int. Shaft Vert.	5P708	2	27'-0"	Horiz -Pier Cap Face
5P401	6	11'-4"	Support for Int. Shaft Vert.	5P709	2	27'-2"	Horiz -Pier Cap Face
5P402	6	10'-4"	Support for Int. Shaft Vert.	5P710	2	27'-3"	Horiz -Pier Cap Face
5P403	6	9'-4"	Support for Int. Shaft Vert.	5P711	2	27'-5"	Horiz -Pier Cap Face
5P404	6	8'-4"	Support for Int. Shaft Vert.				
5P405	4	7'-4"	Support for Int. Shaft Vert.	5P901	2	30'-8"	Horiz -Pier Cap Top
5P406	6	6'-4"	Support for Int. Shaft Vert.	5P902	2	32'-7"	Horiz -Pier Cap Top
5P407	4	5'-4"	Support for Int. Shaft Vert.	5P903	2	33'-8"	Horiz -Pier Cap Top
				5P904	2	34'-6"	Horiz -Pier Cap Top
5P1100	22	35'-3"	Shaft Vertical	5P905	2	35'-0"	Horiz -Pier Cap Top
5P1101	22	36'-3"	Shaft Vertical	5P906	2	35'-4"	Horiz -Pier Cap Top
5P1102	4	20'-8"	Shaft Vertical	5P907	2	35'-6"	Horiz -Pier Cap Top
5P1103	4	21'-8"	Shaft Vertical				
5P1104	4	13'-4"	Shaft Vertical				
5P1105	4	12'-4"	Shaft Vertical				
5P1106	4	4'-1"	Shaft Vertical				
5P1107	4	5'-1"	Shaft Vertical				
5P1108	4	28'-0"	Shaft Vertical				
5P1109	22	36'-9"	Shaft Vertical				
5P1110	20	35'-9"	Shaft Vertical				

BENT BARS

MARK	QTY.	LENGTH	TYPE	A	B	C	D	E	F	G	H	O	R	LOCATION
5P550	104	6'-9"	S	-	1'-10"	5'-1"	1'-10"	-	-	-	-	-	-	Dist. Slab End Vert.
5P551	10	31'-2"	S	-	1'-10"	29'-6"	1'-10"	-	-	-	-	-	-	Dist. Slab End Horiz.
5P552	10	23'-2"	S	-	1'-10"	21'-6"	1'-10"	-	-	-	-	-	-	Dist. Slab End Horiz.
5P553	992	8'-6"	P3	0'-6"	7'-5"	-	-	-	-	0'-7"	-	-	-	Shaft Sets "5A" through "5G"
5P554	192	8'-5"	P2	0'-6"	7'-5"	-	-	-	-	0'-6"	-	-	-	Shaft Sets "5A" through "5F"
5P555	216	8'-2"	P2	0'-6"	7'-2"	-	-	-	-	0'-6"	-	-	-	Shaft Sets "5A" through "5G"
5P556	216	7'-3"	P2	0'-6"	6'-3"	-	-	-	-	0'-6"	-	-	-	Shaft Sets "5A" through "5G"
5P557	166	6'-10"	P1	0'-6"	6'-4"	-	-	-	-	-	-	-	-	Shaft Sets "5A" through "5D"
5P558	664	4'-2"	P1	0'-6"	3'-8"	-	-	-	-	-	-	-	-	Shaft Sets "5A" through "5D"
5P559	24	8'-5"	P1	0'-6"	7'-11"	-	-	-	-	-	-	-	-	Shaft Set "5E"
5P560	132	7'-5"	P1	0'-6"	6'-11"	-	-	-	-	-	-	-	-	Shaft Set "5F"
5P561	144	6'-5"	P1	0'-6"	5'-11"	-	-	-	-	-	-	-	-	Shaft Set "5G"
5P562	40	26'-4"	PR	7'-4"	11'-8"	7'-4"	-	-	-	-	-	7'-5"	3'-9"	Shaft Set "5A"
5P563	58	25'-4"	PR	6'-10"	11'-8"	6'-10"	-	-	-	-	-	7'-5"	3'-9"	Shaft Set "5B"
5P564	34	23'-2"	PR	5'-9"	11'-8"	5'-9"	-	-	-	-	-	7'-5"	3'-9"	Shaft Set "5C"
5P565	34	21'-2"	PR	4'-9"	11'-8"	4'-9"	-	-	-	-	-	7'-5"	3'-9"	Shaft Set "5D" & "5E"
5P566	22	19'-2"	PR	3'-9"	11'-8"	3'-9"	-	-	-	-	-	7'-5"	3'-9"	Shaft Set "5F"
5P567	24	17'-0"	PR	2'-8"	11'-8"	2'-8"	-	-	-	-	-	7'-5"	3'-9"	Shaft Set "5G"
5P568	44	13'-9"	P1	0'-6"	13'-3"	-	-	-	-	-	-	-	-	Shaft Set "5A"
5P569	58	13'-3"	P1	0'-6"	12'-9"	-	-	-	-	-	-	-	-	Shaft Set "5B"
5P570	34	11'-5"	P1	0'-6"	10'-11"	-	-	-	-	-	-	-	-	Shaft Set "5C"
5P571	30	9'-7"	P1	0'-6"	9'-1"	-	-	-	-	-	-	-	-	Shaft Set "5D"
5P1150	58	43'-2"	L	2'-0"	41'-2"	-	-	-	-	-	-	-	-	Shaft Vertical
5P1151	56	42'-2"	L	2'-0"	40'-2"	-	-	-	-	-	-	-	-	Shaft Vertical
5P1152	8	38'-11"	L	2'-0"	36'-11"	-	-	-	-	-	-	-	-	Shaft Vertical
5P1153	8	30'-7"	L	2'-0"	28'-7"	-	-	-	-	-	-	-	-	Shaft Vertical
5P1154	8	22'-4"	L	2'-0"	20'-4"	-	-	-	-	-	-	-	-	Shaft Vertical
5P1155	8	14'-0"	L	2'-0"	12'-0"	-	-	-	-	-	-	-	-	Shaft Vertical
5P572	76	14'-2"	S	-	5'-7"	3'-0"	5'-7"	-	-	-	-	-	-	Pier Cap Shear Stirr. - Set "5G"
5P573	40	14'-0"	S	-	5'-6"	3'-0"	5'-6"	-	-	-	-	-	-	Pier Cap Shear Stirr. - Set "5H"
5P574	32	13'-6"	S	-	5'-3"	3'-0"	5'-3"	-	-	-	-	-	-	Pier Cap Shear Stirr. - Set "5J"
5P575	32	12'-10"	S	-	4'-11"	3'-0"	4'-11"	-	-	-	-	-	-	Pier Cap Shear Stirr. - Set "5K"
5P576	32	12'-2"	S	-	4'-7"	3'-0"	4'-7"	-	-	-	-	-	-	Pier Cap Shear Stirr. - Set "5L"
5P577	24	11'-3"	S	-	4'-3"	2'-9"	4'-3"	-	-	-	-	-	-	Pier Cap Shear Stirr. - Set "5M"
5P578	16	9'-3"	S	-	3'-11"	1'-5"	3'-11"	-	-	-	-	-	-	Pier Cap Shear Stirr. - Set "5G"
5P579	38	15'-8"	S	-	5'-7"	4'-6"	5'-7"	-	-	-	-	-	-	Pier Cap Shear Stirr. - Set "5H"
5P580	20	15'-6"	S	-	5'-6"	4'-6"	5'-6"	-	-	-	-	-	-	Pier Cap Shear Stirr. - Set "5J"
5P581	16	15'-0"	S	-	5'-3"	4'-6"	5'-3"	-	-	-	-	-	-	Pier Cap Shear Stirr. - Set "5K"
5P582	16	14'-4"	S	-	4'-11"	4'-6"	4'-11"	-	-	-	-	-	-	Pier Cap Shear Stirr. - Set "5L"
5P583	16	13'-8"	S	-	4'-7"	4'-6"	4'-7"	-	-	-	-	-	-	Pier Cap Shear Stirr. - Set "5M"
5P584	12	13'-0"	S	-	4'-3"	4'-6"	4'-3"	-	-	-	-	-	-	Pier Cap Shear Stirr. - Set "5N"
5P585	10	10'-5"	S	-	3'-11"	2'-7"	3'-11"	-	-	-	-	-	-	Pier Cap Shear Stirr. - Set "5N"
5P750	16	17'-2"	PR	2'-9"	11'-8"	2'-9"	-	-	-	-	-	7'-5"	3'-9"	Pier Cap - End Stirup
5P950	4	17'-5"	V	-	-	-	8'-7"	8'-10"	-	-	2'-9"	-	-	Pier Cap - Horiz - Bott. Face
5P951	4	18'-9"	V	-	-	-	8'-7"	10'-2"	-	-	3'-2"	-	-	Pier Cap - Horiz - Bott. Face
5P952	4	19'-5"	V	-	-	-	8'-7"	10'-10"	-	-	3'-5"	-	-	Pier Cap - Horiz - Bott. Face
5P953	4	19'-10"	V	-	-	-	8'-7"	11'-3"	-	-	3'-6"	-	-	Pier Cap - Horiz - Bott. Face
5P954	4	19'-11"	V	-	-	-	8'-7"	11'-4"	-	-	3'-7"	-	-	Pier Cap - Horiz - Bott. Face
5P955	2	20'-0"	V	-	-	-	8'-7"	11'-5"	-	-	3'-8"	-	-	Pier Cap - Horiz - Bott. Face
5P956	2	33'-10"	S	-	1'-7"	30'-8"	1'-7"	-	-	-	-	-	-	Pier Cap - Horiz - Top Face
5P957	2	35'-9"	S	-	1'-7"	32'-7"	1'-7"	-	-	-	-	-	-	Pier Cap - Horiz - Top Face
5P958	2	36'-10"	S	-	1'-7"	33'-8"	1'-7"	-	-	-	-	-	-	Pier Cap - Horiz - Top Face
5P959	2	37'-8"	S	-	1'-7"	34'-6"	1'-7"	-	-	-	-	-	-	Pier Cap - Horiz - Top Face
5P960	2	38'-2"	S	-	1'-7"	35'-0"	1'-7"	-	-	-	-	-	-	Pier Cap - Horiz - Top Face
5P961	2	38'-6"	S	-	1'-7"	35'-4"	1'-7"	-	-	-	-	-	-	Pier Cap - Horiz - Top Face
5P962	2	38'-8"	S	-	1'-7"	35'-6"	1'-7"	-	-	-	-	-	-	Pier Cap - Horiz - Top Face
5P586	56	7'-8"	S	-	2'-4"	3'-0"	2'-4"	-	-	-	-	-	-	Bearing Pedestal Stirrup
5P5867	4	14'-8"	HB	1'-0"	3'-2"	3'-2"	3'-2"	3'-2"	-	1'-0"	-	-	-	Bearing Pedestal Hoop

TYPE - BENDING DIAGRAMS

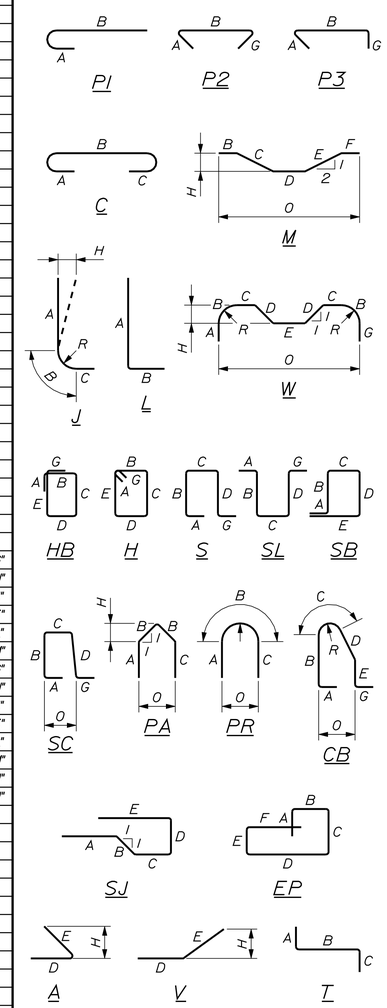

All dimensions are out-to-out of bar.

Bending details and hooks shall conform to the recommendations of the current revision of ACI Standard 315 and ACI Standard 318.

Reinforcing Bar: ASTM A 615/A 615M, Grade 60

GENERAL NOTES

1. The first two digits following the letter(s) of the mark indicate the size of the bar:

   Mark "A502" = bar size #5
   Mark "P805" = bar size #8
   Mark "S650" = bar size #6

2. Each crank bar, Type B, may be replaced by two (2) straight bars (one top and one bottom) of the same bar size as the crank bar. Payment in either case will be based on crank bars as scheduled on the plans.

STATE OF MAINE
DEPARTMENT OF TRANSPORTATION

AC-BH-1267(400)

WIN 12674.00

BRIDGE NO. 2506

BRIDGE PLANS

	BY	DATE
PROJ. MANAGER	N. Benoit	
DESIGN-DETAILED	B. Nichols	Feb. 2013
CHECKED-REVIEWED	------	------
DESIGN2-DETAILED2	------	------
DESIGN3-DETAILED3	------	------
REVISIONS 1	------	------
REVISIONS 2	------	------
REVISIONS 3	------	------
REVISIONS 4	------	------
FIELD CHANGES	------	------

SIGNATURE

P.E. NUMBER

DATE

MAINE KENNEBEC BRIDGE
KENNEBEC RIVER
RICHMOND, SAGADAHOC CTY. DRESDEN, LINCOLN CTY.

PIER NO. 5 REINFORCING STEEL SCHEDULE

SHEET NUMBER

202

OF 238

Filename: ...\MSTA\202_Rebar_Pier5.dgn Division: BRIDGE Username: dana.damren Date:3/27/2013

STRAIGHT BARS

MARK	QTY.	LENGTH	LOCATION	MARK	QTY.	LENGTH	LOCATION
6P800	22	33'-6"	Dist. Slab - Top Mat	6P700	2	19'-1"	Horiz -Pier Cap Face
6P801	48	5'-0"	Dist. Slab - Dowel	6P701	2	24'-4"	Horiz -Pier Cap Face
6P802	34	21'-6"	Dist. Slab - Top Mat	6P702	2	26'-0"	Horiz -Pier Cap Face
				6P703	2	26'-4"	Horiz -Pier Cap Face
6P900	48	33'-6"	Dist. Slab - Bottom Mat	6P704	2	26'-6"	Horiz -Pier Cap Face
				6P705	2	26'-8"	Horiz -Pier Cap Face
6P1000	70	21'-6"	Dist. Slab - Bottom Mat	6P706	2	26'-9"	Horiz -Pier Cap Face
				6P707	2	26'-11"	Horiz -Pier Cap Face
6P400	8	10'-3"	Support for Int. Shaft Vert.	6P708	2	27'-0"	Horiz -Pier Cap Face
6P401	6	9'-3"	Support for Int. Shaft Vert.	6P709	2	27'-2"	Horiz -Pier Cap Face
6P402	6	8'-3"	Support for Int. Shaft Vert.	6P710	2	27'-3"	Horiz -Pier Cap Face
6P403	4	7'-3"	Support for Int. Shaft Vert.	6P711	2	27'-5"	Horiz -Pier Cap Face
6P404	6	6'-3"	Support for Int. Shaft Vert.				
6P405	4	5'-3"	Support for Int. Shaft Vert.	6P901	2	30'-8"	Horiz -Pier Cap Top
				6P902	2	32'-7"	Horiz -Pier Cap Top
6P1100	22	21'-5"	Shaft Vertical	6P903	2	33'-8"	Horiz -Pier Cap Top
6P1101	22	22'-5"	Shaft Vertical	6P904	2	34'-6"	Horiz -Pier Cap Top
6P1102	4	7'-3"	Shaft Vertical	6P905	2	35'-0"	Horiz -Pier Cap Top
6P1103	4	8'-3"	Shaft Vertical	6P906	2	35'-4"	Horiz -Pier Cap Top
6P1104	4	14'-3"	Shaft Vertical	6P907	2	35'-6"	Horiz -Pier Cap Top
6P1105	22	23'-2"	Shaft Vertical				
6P1106	20	22'-2"	Shaft Vertical				

BENT BARS

MARK	QTY.	LENGTH	TYPE	A	B	C	D	E	F	G	H	O	R	LOCATION
6P550	104	9'-2"	S	-	1'-10"	5'-6"	1'-10"	-	-	-	-	-	-	Dist. Slab End Vert.
6P551	10	37'-2"	S	-	1'-10"	33'-6"	1'-10"	-	-	-	-	-	-	Dist. Slab End Horiz.
6P552	10	25'-2"	S	-	1'-10"	21'-6"	1'-10"	-	-	-	-	-	-	Dist. Slab End Horiz.
6P553	712	8'-6"	P3	0'-6"	7'-5"	-	-	-	-	0'-7"	-	-	-	Shaft Sets "6A" through "6F"
6P554	152	8'-5"	P2	0'-6"	7'-5"	-	-	-	-	0'-6"	-	-	-	Shaft Sets "6A" through "6E"
6P555	176	8'-2"	P2	0'-6"	7'-2"	-	-	-	-	0'-6"	-	-	-	Shaft Sets "6A" through "6F"
6P556	176	7'-3"	P2	0'-6"	6'-3"	-	-	-	-	0'-6"	-	-	-	Shaft Sets "6A" through "6F"
6P557	126	6'-10"	P1	0'-6"	6'-4"	-	-	-	-	-	-	-	-	Shaft Sets "6A" through "6F"
6P558	504	4'-2"	P1	0'-6"	3'-8"	-	-	-	-	-	-	-	-	Shaft Sets "6A" through "6F"
6P559	36	8'-5"	P1	0'-6"	7'-11"	-	-	-	-	-	-	-	-	Shaft Set "6D"
6P560	120	7'-5"	P1	0'-6"	6'-11"	-	-	-	-	-	-	-	-	Shaft Set "6E"
6P561	144	6'-5"	P1	0'-6"	5'-11"	-	-	-	-	-	-	-	-	Shaft Set "6F"
6P562	44	24'-4"	PR	6'-4"	11'-8"	6'-4"	-	-	-	-	-	7'-5"	3'-9"	Shaft Set "6A"
6P563	52	23'-4"	PR	5'-10"	11'-8"	5'-10"	-	-	-	-	-	7'-5"	3'-9"	Shaft Set "6B"
6P564	36	21'-4"	PR	4'-10"	11'-8"	4'-10"	-	-	-	-	-	7'-5"	3'-9"	Shaft Set "6C" & "6D"
6P565	20	19'-4"	PR	3'-10"	11'-8"	3'-10"	-	-	-	-	-	7'-5"	3'-9"	Shaft Set "6E"
6P566	24	17'-4"	PR	2'-10"	11'-8"	2'-10"	-	-	-	-	-	7'-5"	3'-9"	Shaft Set "6F"
6P567	44	12'-9"	P1	0'-6"	12'-3"	-	-	-	-	-	-	-	-	Shaft Set "6A"
6P568	52	12'-3"	P1	0'-6"	11'-9"	-	-	-	-	-	-	-	-	Shaft Set "6B"
6P569	30	11'-3"	P1	0'-6"	10'-9"	-	-	-	-	-	-	-	-	Shaft Set "6C"
6P1150	50	39'-2"	L	2'-0"	37'-2"	-	-	-	-	-	-	-	-	Shaft Vertical
6P1151	48	38'-2"	L	2'-0"	36'-2"	-	-	-	-	-	-	-	-	Shaft Vertical
6P1152	8	38'-3"	L	2'-0"	36'-3"	-	-	-	-	-	-	-	-	Shaft Vertical
6P1153	8	30'-1"	L	2'-0"	28'-1"	-	-	-	-	-	-	-	-	Shaft Vertical
6P1154	8	22'-0"	L	2'-0"	20'-0"	-	-	-	-	-	-	-	-	Shaft Vertical
6P1155	8	13'-10"	L	2'-0"	11'-10"	-	-	-	-	-	-	-	-	Shaft Vertical
6P571	76	14'-2"	S	-	5'-7"	3'-0"	5'-7"	-	-	-	-	-	-	Pier Cap Shear Stirr. - Set "6G"
6P572	40	14'-0"	S	-	5'-6"	3'-0"	5'-6"	-	-	-	-	-	-	Pier Cap Shear Stirr. - Set "6H"
6P573	32	13'-6"	S	-	5'-3"	3'-0"	5'-3"	-	-	-	-	-	-	Pier Cap Shear Stirr. - Set "6J"
6P574	32	12'-10"	S	-	4'-11"	3'-0"	4'-11"	-	-	-	-	-	-	Pier Cap Shear Stirr. - Set "6K"
6P575	32	12'-2"	S	-	4'-7"	3'-0"	4'-7"	-	-	-	-	-	-	Pier Cap Shear Stirr. - Set "6L"
6P576	24	11'-3"	S	-	4'-3"	2'-9"	4'-3"	-	-	-	-	-	-	Pier Cap Shear Stirr. - Set "6M"
6P577	16	9'-3"	S	-	3'-11"	1'-5"	3'-11"	-	-	-	-	-	-	Pier Cap Shear Stirr. - Set "6G"
6P578	38	15'-8"	S	-	5'-7"	4'-6"	5'-7"	-	-	-	-	-	-	Pier Cap Shear Stirr. - Set "6H"
6P579	20	15'-6"	S	-	5'-6"	4'-6"	5'-6"	-	-	-	-	-	-	Pier Cap Shear Stirr. - Set "6J"
6P580	16	15'-0"	S	-	5'-3"	4'-6"	5'-3"	-	-	-	-	-	-	Pier Cap Shear Stirr. - Set "6K"
6P581	16	14'-4"	S	-	4'-11"	4'-6"	4'-11"	-	-	-	-	-	-	Pier Cap Shear Stirr. - Set "6L"
6P582	16	13'-8"	S	-	4'-7"	4'-6"	4'-7"	-	-	-	-	-	-	Pier Cap Shear Stirr. - Set "6M"
6P583	12	13'-0"	S	-	4'-3"	4'-6"	4'-3"	-	-	-	-	-	-	Pier Cap Shear Stirr. - Set "6N"
6P584	10	10'-5"	S	-	3'-11"	2'-7"	3'-11"	-	-	-	-	-	-	Pier Cap Shear Stirr. - Set "6N"
6P750	16	17'-2"	PR	2'-9"	11'-8"	2'-9"	-	-	-	-	-	7'-5"	3'-9"	Pier Cap - End Stirup
6P950	4	17'-5"	V	-	-	-	8'-7"	8'-10"	-	-	2'-9"	-	-	Pier Cap - Horiz - Bott. Face
6P951	4	18'-9"	V	-	-	-	8'-7"	10'-2"	-	-	3'-2"	-	-	Pier Cap - Horiz - Bott. Face
6P952	4	19'-5"	V	-	-	-	8'-7"	10'-10"	-	-	3'-5"	-	-	Pier Cap - Horiz - Bott. Face
6P953	4	19'-10"	V	-	-	-	8'-7"	11'-3"	-	-	3'-6"	-	-	Pier Cap - Horiz - Bott. Face
6P954	4	19'-11"	V	-	-	-	8'-7"	11'-4"	-	-	3'-7"	-	-	Pier Cap - Horiz - Bott. Face
6P955	2	20'-0"	V	-	-	-	8'-7"	11'-5"	-	-	3'-8"	-	-	Pier Cap - Horiz - Bott. Face
6P956	2	33'-10"	S	-	1'-7"	30'-8"	1'-7"	-	-	-	-	-	-	Pier Cap - Horiz - Top Face
6P957	2	35'-9"	S	-	1'-7"	32'-7"	1'-7"	-	-	-	-	-	-	Pier Cap - Horiz - Top Face
6P958	2	36'-10"	S	-	1'-7"	33'-8"	1'-7"	-	-	-	-	-	-	Pier Cap - Horiz - Top Face
6P959	2	37'-8"	S	-	1'-7"	34'-6"	1'-7"	-	-	-	-	-	-	Pier Cap - Horiz - Top Face
6P960	2	38'-2"	S	-	1'-7"	35'-0"	1'-7"	-	-	-	-	-	-	Pier Cap - Horiz - Top Face
6P961	2	38'-6"	S	-	1'-7"	35'-4"	1'-7"	-	-	-	-	-	-	Pier Cap - Horiz - Top Face
6P962	2	38'-8"	S	-	1'-7"	35'-6"	1'-7"	-	-	-	-	-	-	Pier Cap - Horiz - Top Face
6P585	56	7'-8"	S	-	2'-4"	3'-0"	2'-4"	-	-	-	-	-	-	Bearing Pedestal Stirrup
6P586	4	14'-8"	HB	1'-0"	3'-2"	3'-2"	3'-2"	3'-2"	-	1'-0"	-	-	-	Bearing Pedestal Hoop

TYPE - BENDING DIAGRAMS

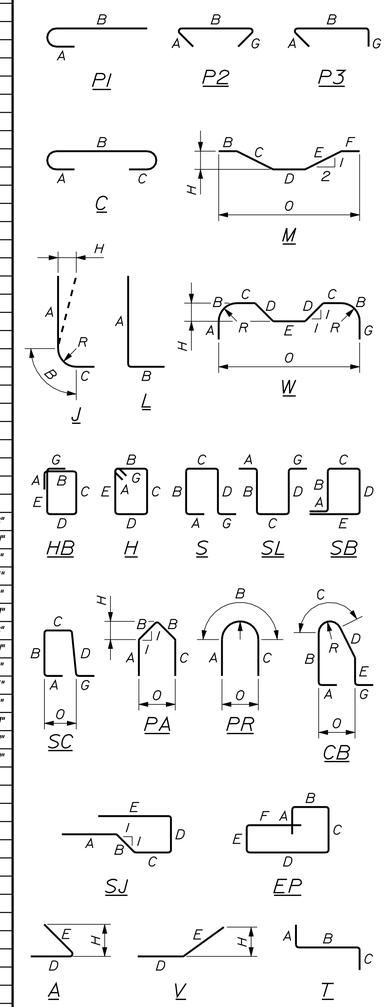

All dimensions are out-to-out of bar.

Bending details and hooks shall conform to the recommendations of the current revision of ACI Standard 315 and ACI Standard 318.

Reinforcing Bar: ASTM A 615/A 615M, Grade 60

GENERAL NOTES

1. The first two digits following the letter(s) of the mark indicate the size of the bar:

   Mark "A502" = bar size #5
   Mark "P805" = bar size #8
   Mark "S650" = bar size #6

2. Each crank bar, Type B, may be replaced by two (2) straight bars (one top and one bottom) of the same bar size as the crank bar. Payment in either case will be based on crank bars as scheduled on the plans.

STATE OF MAINE
DEPARTMENT OF TRANSPORTATION

AC-BH-1267(400)

WIN 12674.00

BRIDGE PLANS

BRIDGE NO. 2506

PROJ. MANAGER	N. Benoit	BY	DATE
DESIGN-DETAILED	B. Nichols	B. Nichols	Feb. 2013
CHECKED-REVIEWED	------	------	------
DESIGN2-DETAILED2	------	------	------
DESIGN3-DETAILED3	------	------	------
REVISIONS 1	------	------	------
REVISIONS 2	------	------	------
REVISIONS 3	------	------	------
REVISIONS 4	------	------	------
FIELD CHANGES	------	------	------

SIGNATURE

P.E. NUMBER

DATE

MAINE KENNEBEC BRIDGE
KENNEBEC RIVER
RICHMOND, SAGADAHOC CTY. DRESDEN, LINCOLN CTY.

PIER NO. 6 REINFORCING STEEL SCHEDULE

SHEET NUMBER

203

OF 238

Filename: ...\MSTA\203_Rebar_Pier6.dgn Division: BRIDGE Username: dana.damren Date:3/27/2013

STRAIGHT BARS

MARK	QTY.	LENGTH	LOCATION	MARK	QTY.	LENGTH	LOCATION
			SUPERSTRUCTURE (Span No. 1)				
S501	54	36'-6"	Transverse ~ Set "1"				
S502	54	36'-2"	Transverse ~ Set "2"				
S503	54	35'-10"	Transverse ~ Set "3"				
S504	54	35'-7"	Transverse ~ Set "4"				
S505	54	35'-2"	Transverse ~ Set "5"				
S506	18	9'-7"	Transverse ~ Haunch				
S507	3	1'-4"	Trans. ~ U.S. Hnch. O.H.: Abut. No. 1				
S508	3	3'-10"	Trans. ~ D.S. Hnch. O.H.: Abut. No. 1				
S509	3	1'-0"	Trans. ~ U.S. Hnch. O.H.: Pier No. 1				
S510	3	3'-3"	Trans. ~ D.S. Hnch. O.H.: Pier No. 1				
S511	204	60'-0"	Longitudinal				
S512	80	21'-6"	Longitudinal ~ Roadway				
S513	22	22'-0"	Longitudinal - O.H. & Curbs				
S601	54	36'-6"	Transverse ~ Set "1"				
S602	54	36'-2"	Transverse ~ Set "2"				
S603	54	35'-10"	Transverse ~ Set "3"				
S604	54	35'-7"	Transverse ~ Set "4"				
S605	52	35'-2"	Transverse ~ Set "5"				
			SUPERSTRUCTURE (Span No. 2 through 7)				
S521	14	35'-3"	Transverse ~ Pier No. 1 End				
S522	5378	35'-3"	Transverse ~ Typical				
S523	78	9'-4"	Transverse ~ Haunch				
S524	3	2'-3"	Trans. ~ U.S. Hnch. O.H.: Pier No. 1				
S525	3	2'-9"	Trans. ~ D.S. Hnch. O.H.: Pier No. 1				
S526	6	2'-6"	Trans. ~ Haunch O.H.: Abut. No. 2				
S527	2346	60'-0"	Longitudinal				
S528	80	37'-0"	Longitudinal ~ Roadway				
S529	22	38'-6"	Longitudinal - O.H. & Curbs				
S621	200	60'-0"	Longitudinal ~ Over Piers				
S622	320	36'-6"	Longitudinal ~ Over Piers				
S623	80	35'-6"	Longitudinal ~ Over Piers				
S731	8	10'-0"	Around Utility Manhole				
S732	8	8'-0"	Around Utility Manhole				
S733	16	6'-0"	Around Utility Manhole				

BENT BARS

MARK	QTY.	LENGTH	TYPE	A	B	C	D	E	F	G	H	O	R	LOCATION
						SUPERSTRUCTURE (Span No. 1)								
S551	33	16'-5"	SJ-1	2'-9"	0'-11"	4'-1"	1'-0"	7'-8"	--	--	0'-1"	0'-4"	--	Long. ~ Hnch. at Abut. No. 1 End
S552	33	8'-10"	SJ-2	2'-9"	0'-11"	1'-5"	1'-0"	2'-9"	--	--	0'-1"	0'-4"	--	Long. ~ Hnch. at Pier No. 1 End
S553	240	5'-6"	SC	0'-6"	1'-5"	1'-3"	1'-6"	--	--	0'-10"	--	1'-4"	--	Transverse ~ U.S. Curb
S554	240	5'-8"	SC	0'-6"	1'-7"	1'-3"	1'-6"	--	--	0'-10"	--	1'-4"	--	Transverse ~ D.S. Curb
S555	2	6'-11"	HB	0'-6"	1'-3"	1'-8"	1'-4"	1'-8"	--	0'-6"	--	--	--	Trans. ~ Curbs at Exp. Joint
S556	24	9'-0"	L	4'-6"	4'-6"	--	--	--	--	--	--	--	--	Around Bridge Drains
S651	54	7'-6"	C	0'-8"	6'-10"	0	--	--	--	--	--	--	--	Transverse ~ U.S. Overhang
S652	54	8'-4"	C	0'-8"	7'-8"	0	--	--	--	--	--	--	--	Transverse ~ U.S. Overhang
S653	54	8'-5"	C	0'-8"	7'-9"	0	--	--	--	--	--	--	--	Transverse ~ U.S. Overhang
S654	54	8'-2"	C	0'-8"	7'-6"	0	--	--	--	--	--	--	--	Transverse ~ U.S. Overhang
S655	53	7'-2"	C	0'-8"	6'-6"	0	--	--	--	--	--	--	--	Transverse ~ U.S. Overhang
S661	54	8'-9"	C	0'-8"	8'-1"	0	--	--	--	--	--	--	--	Transverse ~ D.S. Overhang
S662	54	6'-6"	C	0'-8"	5'-10"	0	--	--	--	--	--	--	--	Transverse ~ D.S. Overhang
S663	54	5'-5"	C	0'-8"	4'-9"	0	--	--	--	--	--	--	--	Transverse ~ D.S. Overhang
S664	54	6'-1"	C	0'-8"	5'-5"	0	--	--	--	--	--	--	--	Transverse ~ D.S. Overhang
S665	53	7'-10"	C	0'-8"	7'-2"	0	--	--	--	--	--	--	--	Transverse ~ D.S. Overhang
						SUPERSTRUCTURE (Span No. 2 through 7)								
S561	33	9'-3"	SJ-1	2'-9"	1'-1"	1'-7"	1'-1"	2'-9"	--	--	0'-1"	0'-4"	--	Long. ~ Hnch. at Pier No. 1 End
S562	33	9'-4"	SJ-1	2'-9"	1'-1"	1'-8"	1'-1"	2'-9"	--	--	0'-1"	0'-4"	--	Long. ~ Hnch. at Abut. No. 2 End
S563	135	9'-9"	M	--	2'-9"	1'-6"	1'-3"	1'-6"	2'-9"	--	1'-1"	8'-11"	--	Long. ~ Haunch at Const. Joints
S564	5390	6'-10"	C	0'-7"	6'-3"	0	--	--	--	--	--	--	--	Transverse ~ Overhangs
S565	4742	5'-7"	SC	0'-6"	1'-6"	1'-3"	1'-6"	--	--	0'-10"	--	1'-4"	--	Transverse ~ Curbs
S566	6	7'-1"	HB	0'-6"	1'-3"	1'-9"	1'-4"	1'-9"	--	0'-6"	--	--	--	Trans. ~ Curbs at Exp. Joints
S567	304	9'-0"	L	4'-6"	4'-6"	--	--	--	--	--	--	--	--	Around Bridge Drains

Note: All reinforcing steel in the slab and curbs shall meet the requirements of Special Provisions Section 503, Corrosion Resistant Reinforcing.

TYPE - BENDING DIAGRAMS

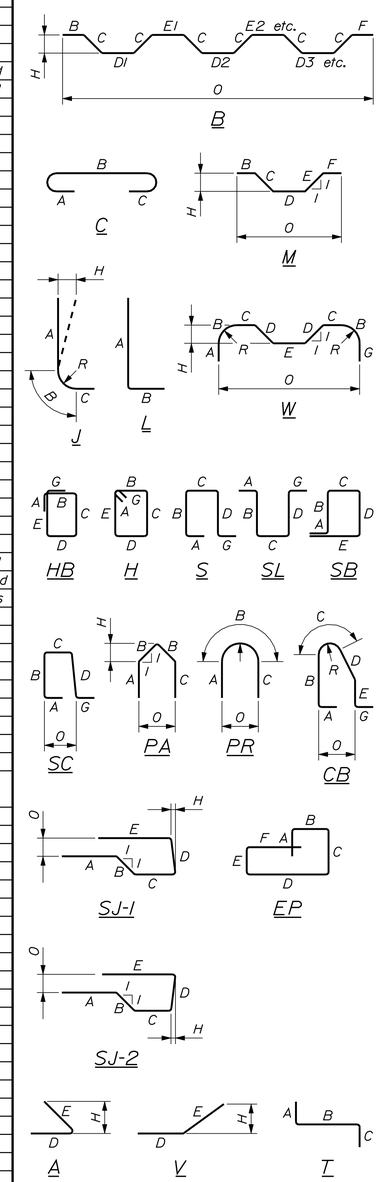

All dimensions are out-to-out of bar.

Bending details and hooks shall conform to the recommendations of the current revision of ACI Standard 315 and ACI Standard 318.

Reinforcing Bar: ASTM A 615/A 615M, Grade 60

GENERAL NOTES

1. The first two digits following the letter(s) of the mark indicate the size of the bar:

   Mark "A502" = bar size #5
   Mark "P805" = bar size #8
   Mark "S650" = bar size #6

2. Each crank bar, Type B, may be replaced by two (2) straight bars (one top and one bottom) of the same bar size as the crank bar. Payment in either case will be based on crank bars as scheduled on the plans.

STATE OF MAINE
DEPARTMENT OF TRANSPORTATION

AC-BH-1267(400)

WIN 12674.00

BRIDGE PLANS

BRIDGE NO. 2506

PROJ. MANAGER	N. Benoit	BY	DATE
DESIGN-DETAILED	D. Damren	D. Damren	Oct. 2012
CHECKED-REVIEWED	D. Damren		
DESIGN2-DETAILED2			
DESIGN3-DETAILED3			
REVISIONS 1			
REVISIONS 2			
REVISIONS 3			
REVISIONS 4			
FIELD CHANGES			

SIGNATURE

P.E. NUMBER

DATE

MAINE KENNEBEC BRIDGE
KENNEBEC RIVER
RICHMOND, SAGADAHOC CTY. DRESDEN, LINCOLN CTY.

SUPERSTRUCTURE REINFORCING STEEL SCHEDULE

SHEET NUMBER

204

OF 238

Filename: ...\204_Rebar_Superstructure.dgn Division: BRIDGE Username: dana.damren Date:4/10/2013

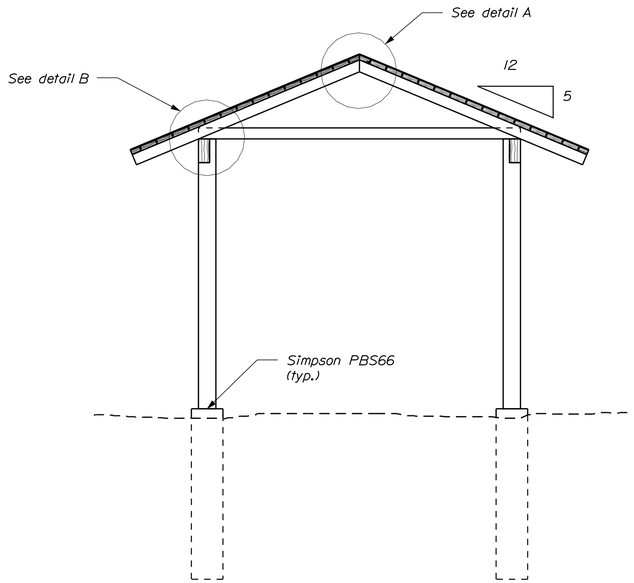

END ELEVATION

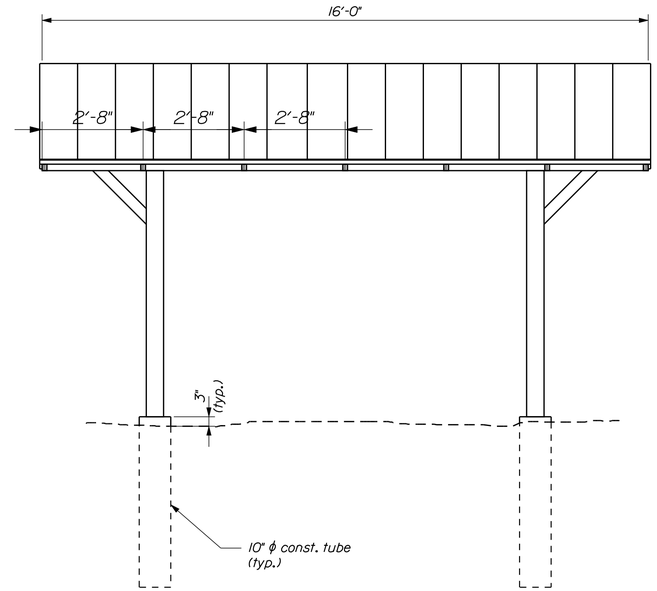

SIDE ELEVATION

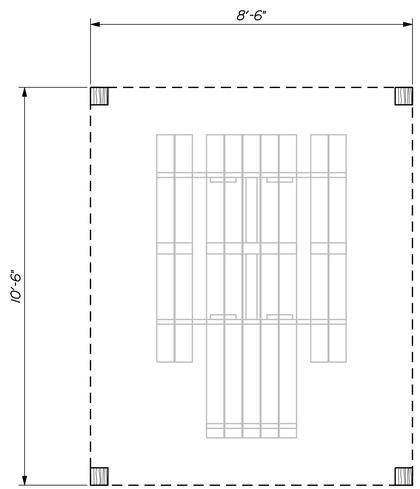

PLAN

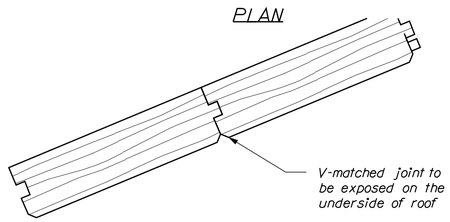

ROOF SHEATHING

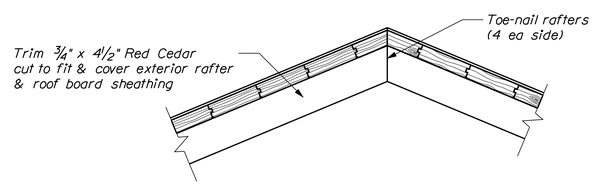

DETAIL "A"

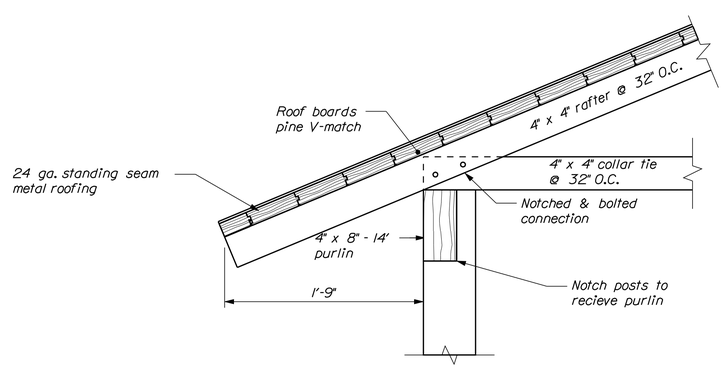

DETAIL "B"

SPECIFICATIONS

1. Contrctor shall supply materials and labor listed below.

2. All lumber shall be rough sawn, precut and partially assembled.

3. All lumber is to be free of twists and bow.

4. All workmanship to be high quality and all saw cuts to have square and true edges to insure tight fitting joints.

5. All 4 x lumber to be rough sawn western red cedar No. 2 and better.

6. All 6 x 6 posts to be rough sawn western red cedar No. 2 and better.

7. All 2 x 6 v-matched roof boards to be rough sawn western red cedar No. 2-3 and better.

8. Gable ends to be enclosed with vertical 1 x 6 v-match rough sawn western red cedar, No. 2-3 and better.

9. Trim boards to be rough sawn western red cedar No 2 and better.

10. Moisture content, all lumber, not to exceed 19%.

11. Structural members shall have bolted connections.

MATERIAL LIST

2	10" dia. constrution tube 10'	column	EA
4	Simpson ST PBS66 or equal	column	EA
4	6x6-8' Red Cedar RS	column	EA
2	4x8-14' Red Cedar RS	purlin	EA
6	4x4-14' Red Cedar RS	rafters	EA
6	4x4-10' Red Cedar RS	col. ties	EA
1	4x4 10' Red Cedar RS	braces	EA
480	2x6 V-match Red Cedar RS	roof sheathing	LF
70	1x6 V-match Red Cedar RS	gable end	LF
210	24 ga. standing seam metal roofing	roofing	SF
12	1/2" x 7" SS lag screw w/ washer		EA
32	1/2" x 7" SS carriage bolt w/ nut & washer		EA
10	8d galv. common nail		LB
5	16d galv.common nail		LB

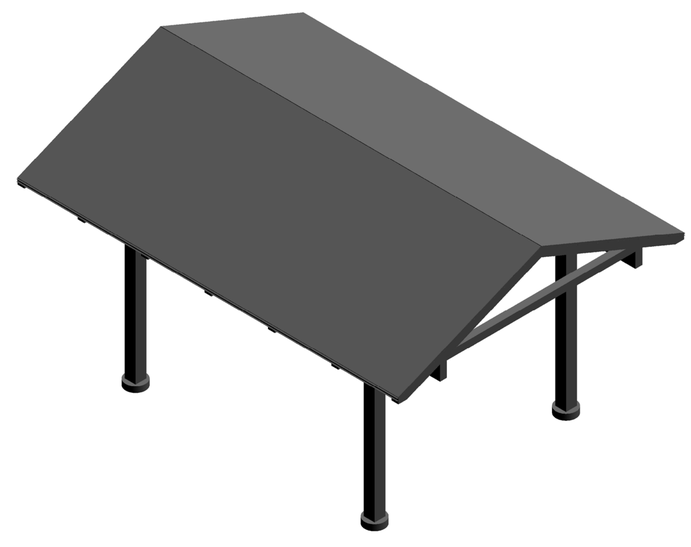

STATE OF MAINE
DEPARTMENT OF TRANSPORTATION

AC-BH-1267(400)

WIN 12674.00

BRIDGE NO. 2506

BRIDGE PLANS

PROJ. MANAGER	N. Benoit	BY	DATE
DESIGN-DETAILED	K. Cooper	A. Nodeau	Feb. 2013
CHECKED-REVIEWED	------	------	------
DESIGN2-DETAILED2	------	------	------
DESIGN3-DETAILED3	------	------	------
REVISIONS 1	------		------
REVISIONS 2	------		------
REVISIONS 3	------		------
REVISIONS 4	------		------
FIELD CHANGES	------		------

SIGNATURE

P.E. NUMBER

DATE

MAINE KENNEBEC BRIDGE
KENNEBEC RIVER
RICHMOND, SAGADAHOC CTY. DRESDEN, LINCOLN CTY.

SHELTER PLANS

SHEET NUMBER

205

OF 238

Filename: ...\msta\205_Rest_Area_Shelter.dgn Division: BRIDGE Username: dana.damren Date:3/27/2013

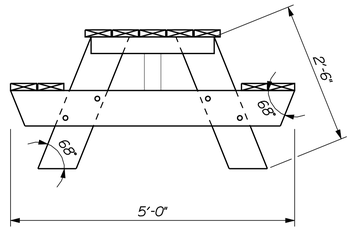

END ELEVATION

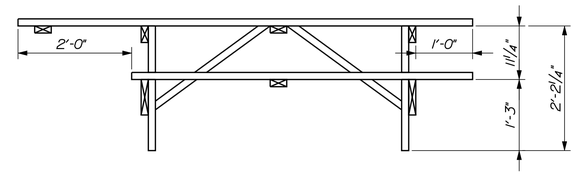

SIDE ELEVATION

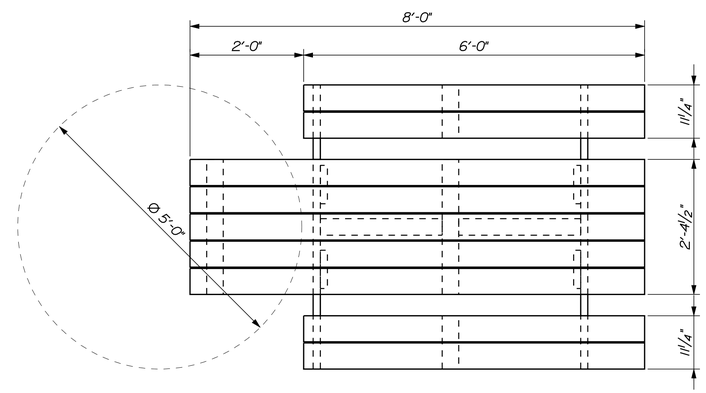

PLAN

ADA COMPLIANT DESIGN

ADA MATERIAL LIST

3	EA	2x8-8' Red Cedar S4S	crosspieces & legs
5	EA	2x6-8' Red Cedar S4S	top
4	EA	2x6-6' Red Cedar S4S	benches
3	EA	2x4-6' Red Cedar S4S	crosspieces & braces
8	EA	⅜" x 3½" SS carriage bolt w/ nut & washer	
3	LB	2½" SS deck screw	

STATE OF MAINE
DEPARTMENT OF TRANSPORTATION

AC-BH-1267(400)

WIN 12674.00

BRIDGE NO. 2506

BRIDGE PLANS

PROJ. MANAGER	N. Benoit	BY	DATE
DESIGN-DETAILED	K. Cooper	A. Nodeau	Feb. 2013
CHECKED-REVIEWED	------	------	------
DESIGN2-DETAILED2	------	------	------
DESIGN3-DETAILED3	------	------	------
REVISIONS 1	------		------
REVISIONS 2	------		------
REVISIONS 3	------		------
REVISIONS 4	------		------
FIELD CHANGES	------		------

SIGNATURE

P.E. NUMBER

DATE

MAINE KENNEBEC BRIDGE
KENNEBEC RIVER
RICHMOND, SAGADAHOC CTY. DRESDEN, LINCOLN CTY.

PICNIC TABLE PLANS

SHEET NUMBER

206

OF 238

Filename: ...\msta\206_Picnic_Table.dgn Division: BRIDGE Username: dana.damren Date:3/27/2013

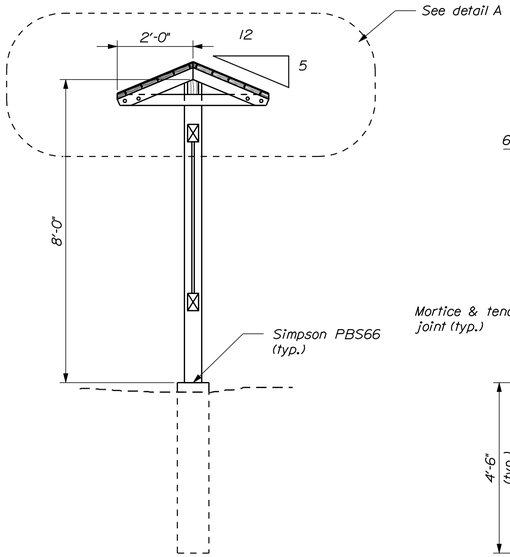

END ELEVATION

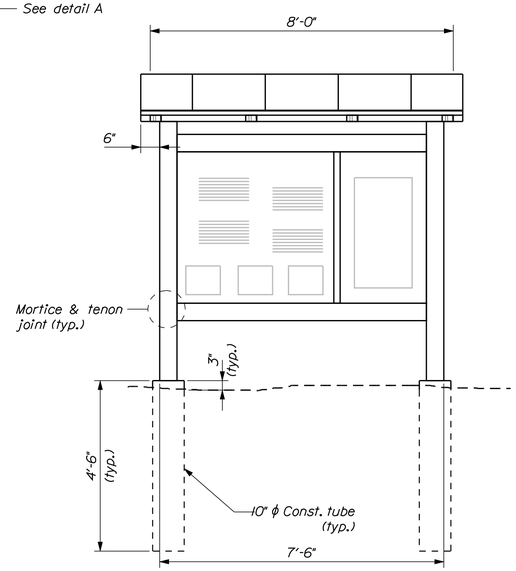

FRONT ELEVATION

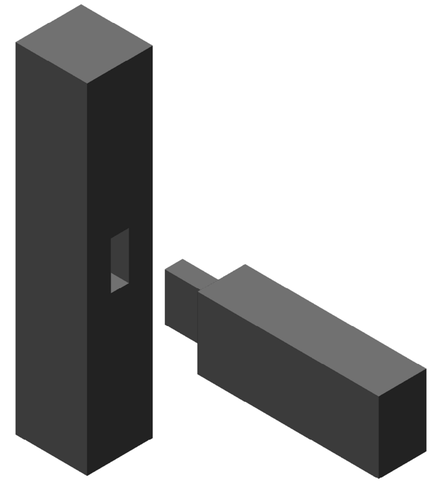

MORTICE & TENON JOINT

SPECIFICATIONS

1. Contractor shall supply materials and labor listed below.
2. All lumber shall be rough sawn, precut and partially assembled.
3. All lumber is to be free of twists and bow.
4. All workmanship to be high quality and all saw cuts to have square and true edges to insure tight fitting joints.
5. All 4 x lumber to be rough sawn western red cedar No. 2 and better.
6. All 6 x 6 posts to be rough sawn western red cedar No. 2 and better.
7. All matched roof boards to be rough sawn western red cedar No.2-3 and better.
8. Trim boards to be rough sawn western red cedar No 2 and better.
9. Moisture content, all lumber, not to exceed 19%.
10. Structural members shall have bolted connections.

MATERIAL LIST

1	10" dia. construction tube 10'	column	EA
2	Simpson ST PBS66 or equal	column	EA
2	6x6-8' Red Cedar RS	column	EA
1	4x6-8' Red Cedar RS	ridge	EA
4	4x4-8' Red Cedar RS	rafters	EA
2	4x4-10' Red Cedar RS	col. ties	EA
2	4x4-8' Red Cedar RS	gable trim	EA
2	4x6-8' Red Cedar RS	sign bracing	EA
1	4x8x3/4" exterior grade plywood	sign	EA
20	1x6 Red Cedar	sign trim	LF
100	2x6 v-match Red Cedar	roof sheathing	LF
50	24 ga. standing seam metal roofing	roofing	SF
16	1/2" x 4" SS carriage bolt w/ nut & washer		EA
4	8d galv. common nail		LB
2	16d galv.common nail		LB

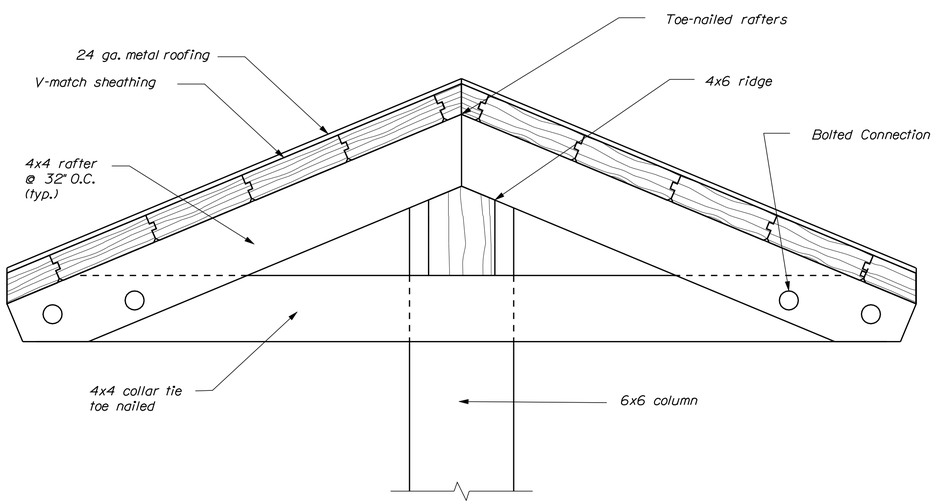

DETAIL A

STATE OF MAINE
DEPARTMENT OF TRANSPORTATION

AC-BH-1267(400)

WIN 12674.00

BRIDGE NO. 2506

BRIDGE PLANS

PROJ. MANAGER	N. Benoit	BY	DATE
DESIGN-DETAILED	K. Cooper	A. Nodeau	Feb. 2013
CHECKED-REVIEWED	------	------	------
DESIGN2-DETAILED2	------	------	------
DESIGN3-DETAILED3	------	------	------
REVISIONS 1	------	------	------
REVISIONS 2	------	------	------
REVISIONS 3	------	------	------
REVISIONS 4	------	------	------
FIELD CHANGES	------	------	------

SIGNATURE

P.E. NUMBER

DATE

MAINE KENNEBEC BRIDGE
KENNEBEC RIVER
RICHMOND, SAGADAHOC CTY. DRESDEN, LINCOLN CTY.

KIOSK PLANS

SHEET NUMBER

207

OF 238

Filename: ...\00\bridge\msta\207_Kiosk.dgn Division: BRIDGE Username: dana.damren Date:3/27/2013

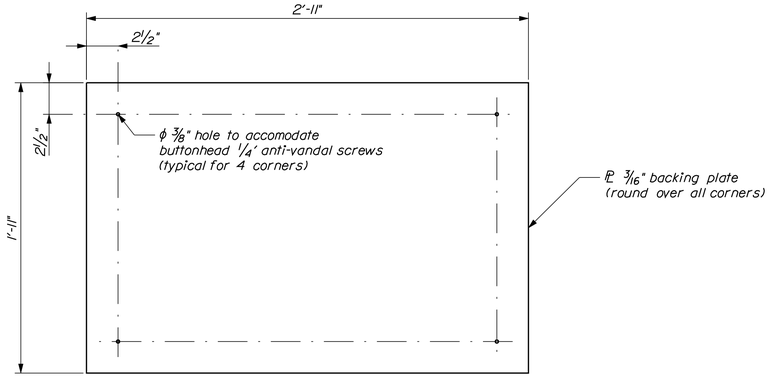

BACKING PLATE

*See special provisions section 645 - Highway Signage for further information.

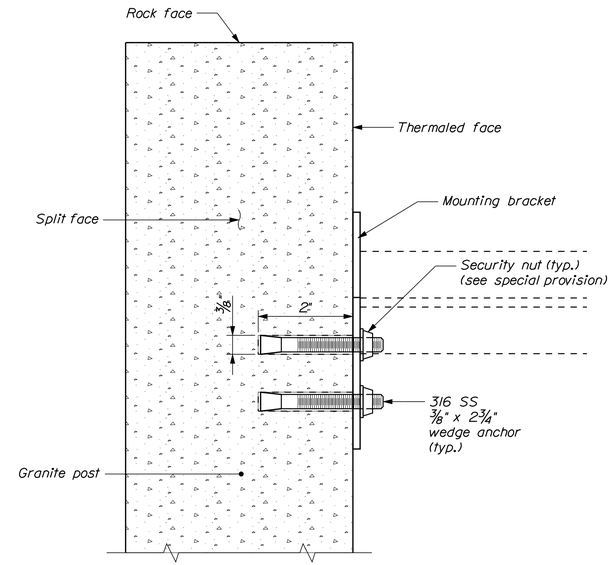

MOUNTING BRACKET ANCHOR DETAIL

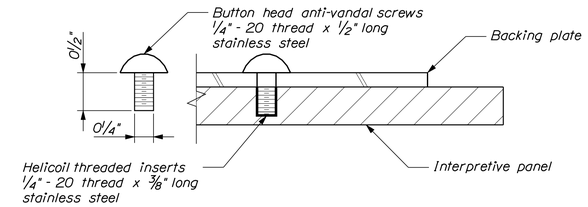

FASTENING DETAIL
installation by others

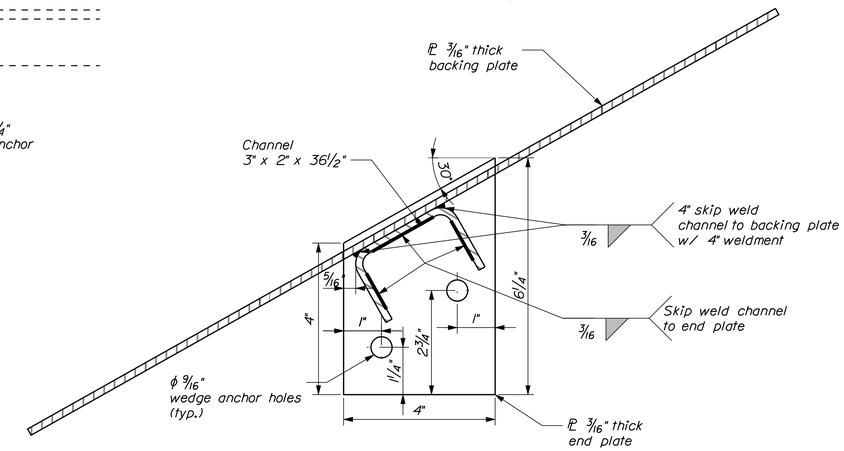

MOUNTING BRACKET DETAIL

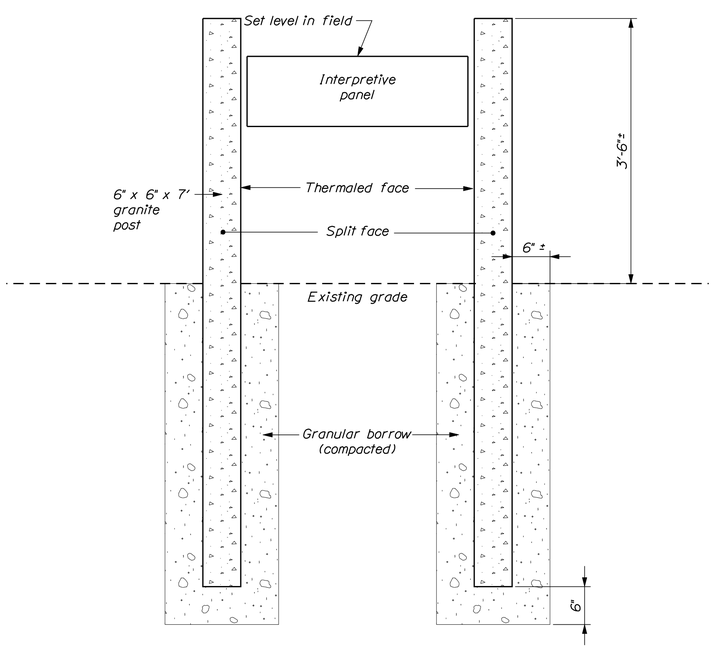

INTERPRETIVE PANEL HOLDER
front elevation

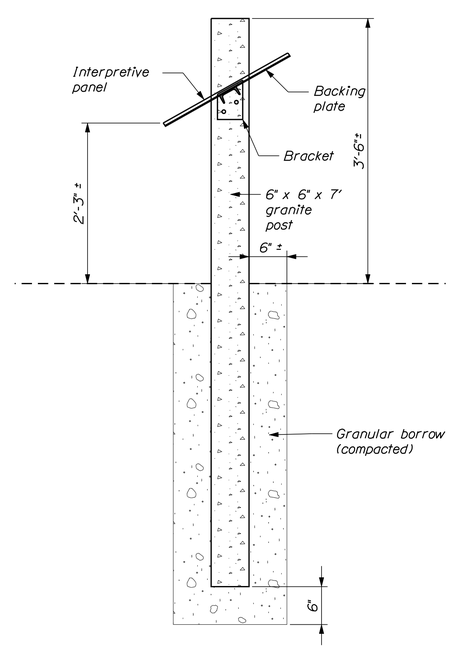

INTERPRETIVE PANEL HOLDER
side elevation

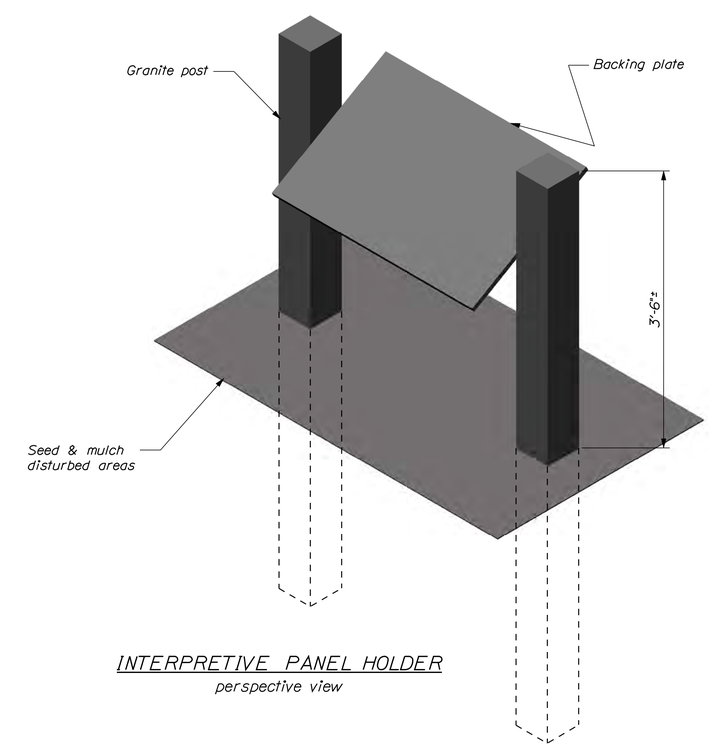

INTERPRETIVE PANEL HOLDER
perspective view

ALL DETAILS
NOT TO SCALE

STATE OF MAINE
DEPARTMENT OF TRANSPORTATION

AC-BH-1267(400)

WIN 12674.00

BRIDGE NO. 2506

BRIDGE PLANS

		BY	DATE
PROJ. MANAGER	N. Benoit		
DESIGN-DETAILED	K. Cooper	A. Nodeau	Feb. 2013
CHECKED-REVIEWED	------	------	------
DESIGN2-DETAILED2	------	------	------
DESIGN3-DETAILED3	------	------	------
REVISIONS 1	------	------	------
REVISIONS 2	------	------	------
REVISIONS 3	------	------	------
REVISIONS 4	------	------	------
FIELD CHANGES	------	------	------

SIGNATURE

P.E. NUMBER

DATE

MAINE KENNEBEC BRIDGE
KENNEBEC RIVER
RICHMOND, SAGADAHOC CTY. DRESDEN, LINCOLN CTY.

INTERPRETIVE PANELS

SHEET NUMBER
208
OF 238

Filename: ...\208_Interpretive Panels.dgn Division: BRIDGE Username: dana.damren Date:3/27/2013

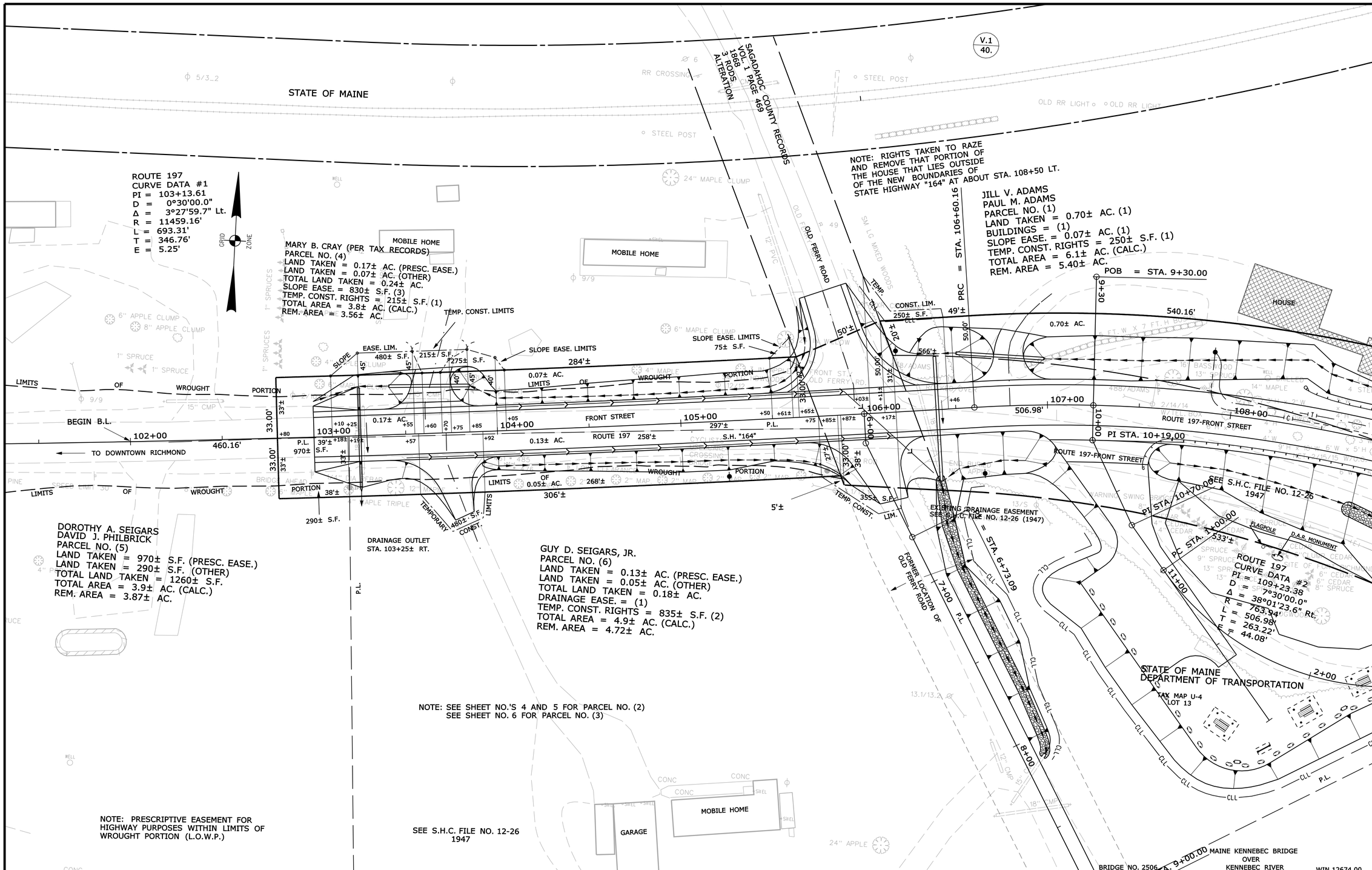

THIS PLAN WAS PREPARED IN CONNECTION WITH THE DEPARTMENT'S ACQUISITION OF REAL PROPERTY FOR TRANSPORTATION PURPOSES. IT CANNOT BE USED TO ESTABLISH LEGAL BOUNDARIES BETWEEN ABUTTING PROPERTY OWNERS.

SYMBOLS

- ● IP or ⊕ P/P (IRON PIPE or PIN FOUND)
- ☐ S.T. (SEPTIC TANK)
- ▣ (ROW MONUMENT)
- &BM (TRAVERSE POINT)
- (WELL)
- GRADING LIMIT LINE
- CONSTRUCTION LIMIT LINE
- PROPERTY LINE
- PL
- LIMITS OF WROUGHT PORTION (L.O.W.P.)
- EXISTING RIGHT OF WAY
- NEW RIGHT OF WAY
- NEW ROW WITHIN EXIST. ROW
- CONTROL OF ACCESS
- WATER LINE
- GAS LINE
- ELECTRIC LINE
- TELEPHONE LINE
- SEWER LINE

ITEM	TECH	CHECKED
BASE MAP		
EXIST. R/W	D.W.B.	
PROP. LINES	D.W.B.	
AREAS	D.W.B.	P.N.S.

STATE OF MAINE
DEPARTMENT OF TRANSPORTATION
16 STATE HOUSE STATION - AUGUSTA, ME 04333-0016
RICHMOND-DRESDEN
RIGHT OF WAY MAP

REVISIONS

NO.	DATE	DESCRIPTION	BY
1	10-24-12	PARCEL NO. (1) HAS BEEN ACQUIRED	D.W.B.

PLAN FILED IN PLAN BOOK PAGE COUNTY RECORD

NO.	GRANTOR	INSTRUMENT	DATE	BOOK	PAGE
	PART I	COND.	7/24/12	3407	134
	PART II	COND.	2/26/13	3476	336

DAVID BERNHARDT
COMMISSIONER
KENNETH L. SWEENEY
CHIEF ENGINEER
DATE

STATE OF MAINE
PETER A. BELANGER 1341
PROFESSIONAL LAND SURVEYOR

STATE HIGHWAY "164"
FRONT STREET / ROUTE 197
RICHMOND SAGADAHOC COUNTY
FEDERAL AID PROJECT NO. BH-1267(400) PART I, II

JULY 2012 | RIGHT-OF-WAY MAP | D.O.T. FILE NO. 12-130
SCALE 1" = 25' | SHEET 1 OF 6

SHEET NUMBER
209
OF 238

Filename: ...\00\ROW\MSTA\001_RWPLAN1.dgn Division: BRIDGE Username: dond.damren Date:3/27/2013

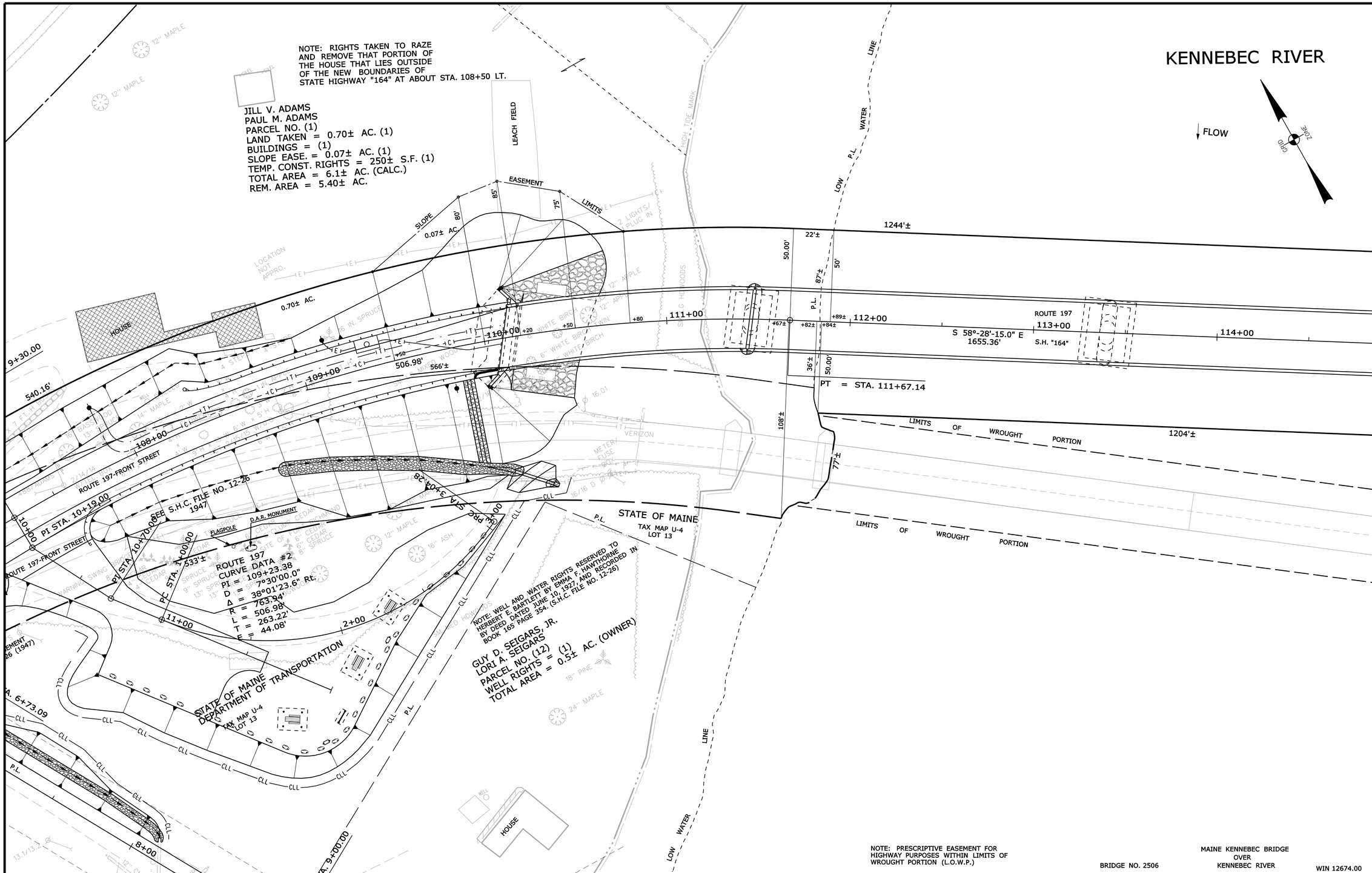

THIS PLAN WAS PREPARED IN CONNECTION WITH THE DEPARTMENT'S ACQUISITION OF REAL PROPERTY FOR TRANSPORTATION PURPOSES. IT CANNOT BE USED TO ESTABLISH LEGAL BOUNDARIES BETWEEN ABUTTING PROPERTY OWNERS.

SYMBOLS

- ● IP or ● P/P (IRON PIPE or PIN FOUND)
- ☐ S.T. (SEPTIC TANK)
- ⊠ (ROW MONUMENT)
- ⚓BM (TRAVERSE POINT)
- WELL
- GRADING LIMIT LINE
- CONSTRUCTION LIMIT LINE
- PROPERTY LINE
- P.L. - LIMITS OF WROUGHT PORTION (L.O.W.P.)
- NEW RIGHT OF WAY
- NEW ROW WITHIN EXIST. ROW
- CONTROL OF ACCESS
- WATER LINE
- GAS LINE
- ELECTRIC LINE
- TELEPHONE LINE
- SEWER LINE

ITEM	TECH	CHECKED
BASE MAP		
EXIST. R/W	D.W.B.	
PROP. LINES	D.W.B.	
AREAS	D.W.B.	P.N.S.

STATE OF MAINE
DEPARTMENT OF TRANSPORTATION
16 STATE HOUSE STATION - AUGUSTA, ME 04333-0016
RICHMOND-DRESDEN
RIGHT OF WAY MAP

REVISIONS

NO.	DATE	DESCRIPTION	BY
1	10-24-12	PARCEL NO. (1) HAS BEEN ACQUIRED	D.W.B.

PLAN FILED IN PLAN BOOK PAGE COUNTY RECORD

NO.	GRANTOR	INSTRUMENT	DATE	BOOK	PAGE
	PART I	COND.	7/24/12	3407	134
	PART II	COND.	2/26/13	3476	336

DAVID BERNHARDT
COMMISSIONER
KENNETH L. SWEENEY
CHIEF ENGINEER
DATE

STATE OF MAINE
PETER A. BELANGER
1341
PROFESSIONAL LAND SURVEYOR

STATE HIGHWAY "164"
FRONT STREET + ROUTE 197
RICHMOND SAGADAHOC COUNTY
FEDERAL AID PROJECT NO. BH-1267(400) PART I, II

JULY 2012 | RIGHT-OF-WAY MAP | D.O.T. FILE NO. 12-130
SCALE 1" = 25' | SHEET 2 OF 6

SHEET NUMBER
210
OF 238

Filename: ...\00\ROW\MSTA\002_RWPLAN2.dgn Division: BRIDGE Username: dana.damren Date:3/27/2013

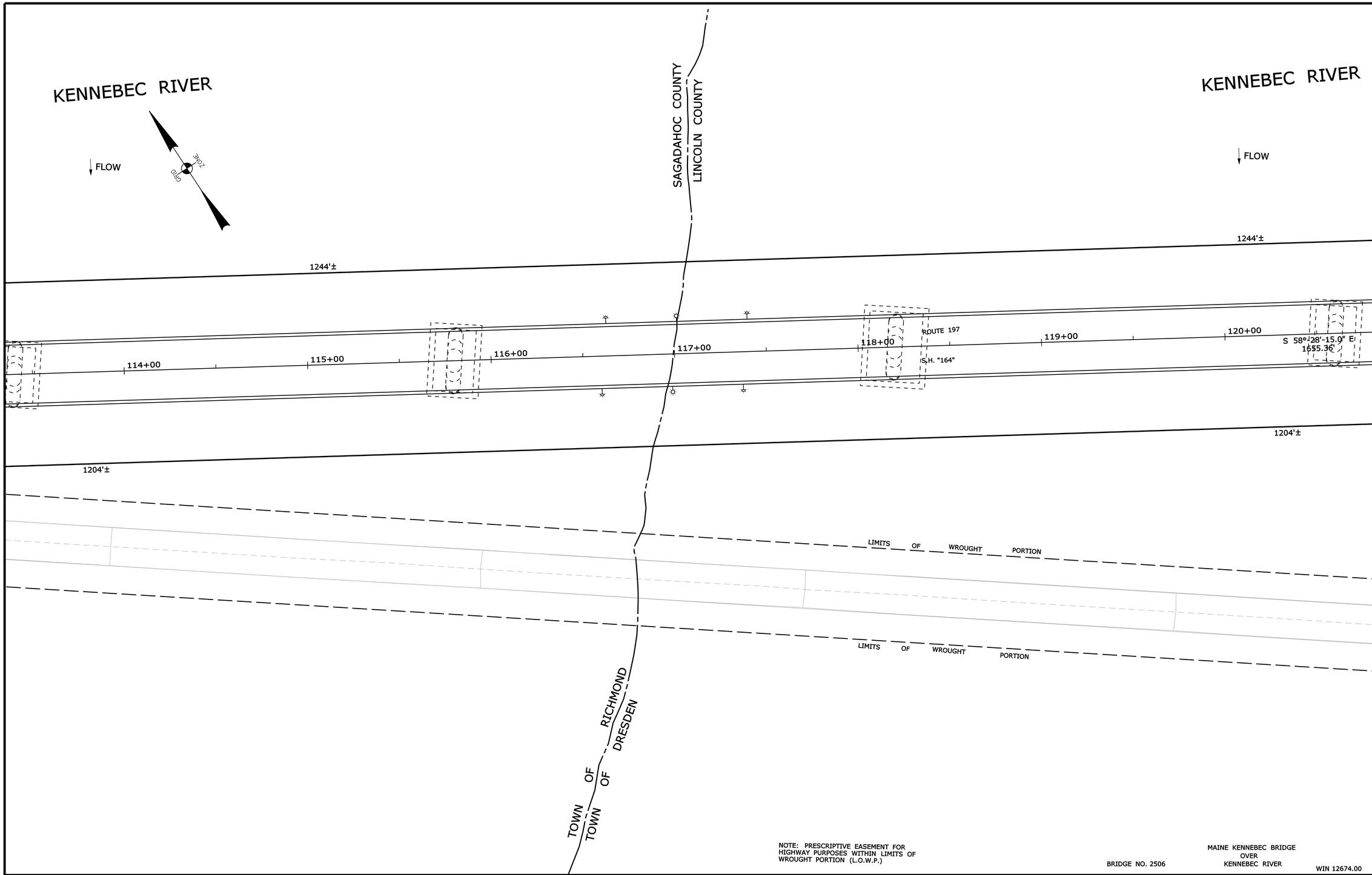

NOTE: PRESCRIPTIVE EASEMENT FOR HIGHWAY PURPOSES WITHIN LIMITS OF WROUGHT PORTION (L.O.W.P.)

BRIDGE NO. 2506

MAINE KENNEBEC BRIDGE
OVER
KENNEBEC RIVER

WIN 12674.00

THIS PLAN WAS PREPARED IN CONNECTION WITH THE DEPARTMENT'S ACQUISITION OF REAL PROPERTY FOR TRANSPORTATION PURPOSES. IT CANNOT BE USED TO ESTABLISH LEGAL BOUNDARIES BETWEEN ABUTTING PROPERTY OWNERS.

SYMBOLS

- IP or ● P/P (IRON PIPE or PIN FOUND)
- ☐ S.T. (SEPTIC TANK)
- ▣ (ROW MONUMENT)
- ⚓ (TRAVERSE POINT)
- ○WELL (WELL)
- GRADING LIMIT LINE
- CONSTRUCTION LIMIT LINE
- PROPERTY LINE
- PL
- LIMITS OF WROUGHT PORTION (L.O.W.P.)
- EXISTING RIGHT OF WAY
- NEW RIGHT OF WAY
- NEW ROW WITHIN EXIST. ROW
- CONTROL OF ACCESS
- WATER LINE
- GAS LINE
- ELECTRIC LINE
- TELEPHONE LINE
- SEWER LINE

ITEM	TECH	CHECKED
BASE MAP		
EXIST. R/W	D.W.B.	
PROP. LINES	D.W.B.	
AREAS	D.W.B.	P.N.S.

STATE OF MAINE
DEPARTMENT OF TRANSPORTATION
16 STATE HOUSE STATION - AUGUSTA, ME 04333-0016
RICHMOND-DRESDEN
RIGHT OF WAY MAP

REVISIONS

NO.	DATE	DESCRIPTION	BY

PLAN FILED IN PLAN BOOK PAGE COUNTY RECORD

NO.	GRANTOR	INSTRUMENT	DATE	BOOK	PAGE
	PART II (SAGADAHOC COUNTY)	COND.	2/26/13	3476	336
	PART II (LINCOLN COUNTY)	COND.	2/26/13	4633	2

DAVID BERNHARDT
COMMISSIONER

KENNETH L. SWEENEY
CHIEF ENGINEER

DATE

STATE HIGHWAY "164"
FRONT STREET + ROUTE 197

RICHMOND-DRESDEN SAGADAHOC & LINCOLN COUNTY

FEDERAL AID PROJECT NO. BH-1267(400) PART II

JULY 2012	RIGHT-OF-WAY MAP	D.O.T. FILE NO. 12-130 & 8-174
SCALE 1" = 25'	SHEET 3 OF 6	

SHEET NUMBER
211
OF 238

Filename: ...\00\ROW\MSTA\003_RWPLAN3.dgn Division: BRIDGE Username: dana.damren Date:3/27/2013

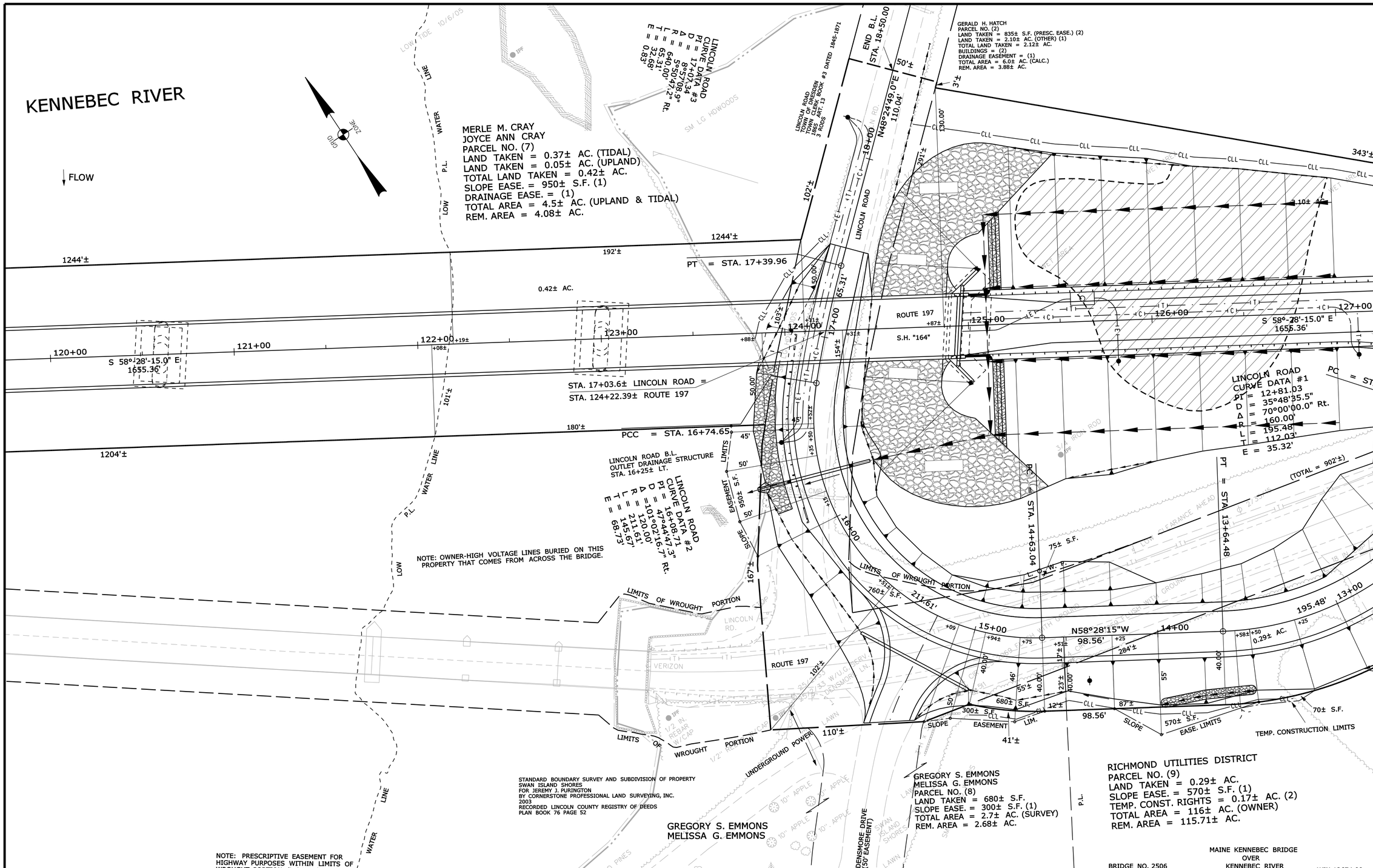

THIS PLAN WAS PREPARED IN CONNECTION WITH THE DEPARTMENT'S ACQUISITION OF REAL PROPERTY FOR TRANSPORTATION PURPOSES. IT CANNOT BE USED TO ESTABLISH LEGAL BOUNDARIES BETWEEN ABUTTING PROPERTY OWNERS.

SYMBOLS

- IP or ● IPF (IRON PIPE or PIN FOUND)
- S.T. (SEPTIC TANK)
- (ROW MONUMENT)
- &BM (TRAVERSE POINT)
- (WELL)
- GRADING LIMIT LINE
- CONSTRUCTION LIMIT LINE
- PROPERTY LINE
- LIMITS OF WROUGHT PORTION (L.O.W.P.)
- NEW RIGHT OF WAY
- NEW ROW WITHIN EXIST. ROW
- CONTROL OF ACCESS
- WATER LINE
- GAS LINE
- ELECTRIC LINE
- TELEPHONE LINE
- SEWER LINE

ITEM	TECH	CHECKED
BASE MAP		
EXIST. R/W	D.W.B.	
PROP. LINES	D.W.B.	
AREAS	D.W.B.	P.N.S.

STATE OF MAINE
DEPARTMENT OF TRANSPORTATION
16 STATE HOUSE STATION - AUGUSTA, ME 04333-0016
RICHMOND-DRESDEN
RIGHT OF WAY MAP

REVISIONS

NO.	DATE	DESCRIPTION	BY
1	10-24-12	PARCEL NO. (2) HAS BEEN ACQUIRED	D.W.B.

PLAN FILED IN PLAN BOOK PAGE COUNTY RECORD

NO.	GRANTOR	INSTRUMENT	DATE	BOOK	PAGE
	PART I	COND.	7/24/12	4549	52
	PART II	COND.	2/26/13	4633	2

DAVID BERNHARDT
COMMISSIONER
KENNETH L. SWEENEY
CHIEF ENGINEER
DATE

STATE OF MAINE
PETER A. BELANGER 1341
PROFESSIONAL LAND SURVEYOR

BRIDGE NO. 2506
MAINE KENNEBEC BRIDGE OVER KENNEBEC RIVER
WIN 12674.00

STATE HIGHWAY "164"
ROUTE 197
DRESDEN LINCOLN COUNTY
FEDERAL AID PROJECT NO. BH-1267(400) PART I, PART II

JULY 2012 | RIGHT-OF-WAY MAP | D.O.T.FILE NO. 8-174
SCALE 1" = 25' | SHEET 4 OF 6

SHEET NUMBER
212
OF 238

Filename: ...\00\ROW\MSTA\004_RWPLAN4.dgn Division: BRIDGE Username: dana.damren Date:3/27/2013

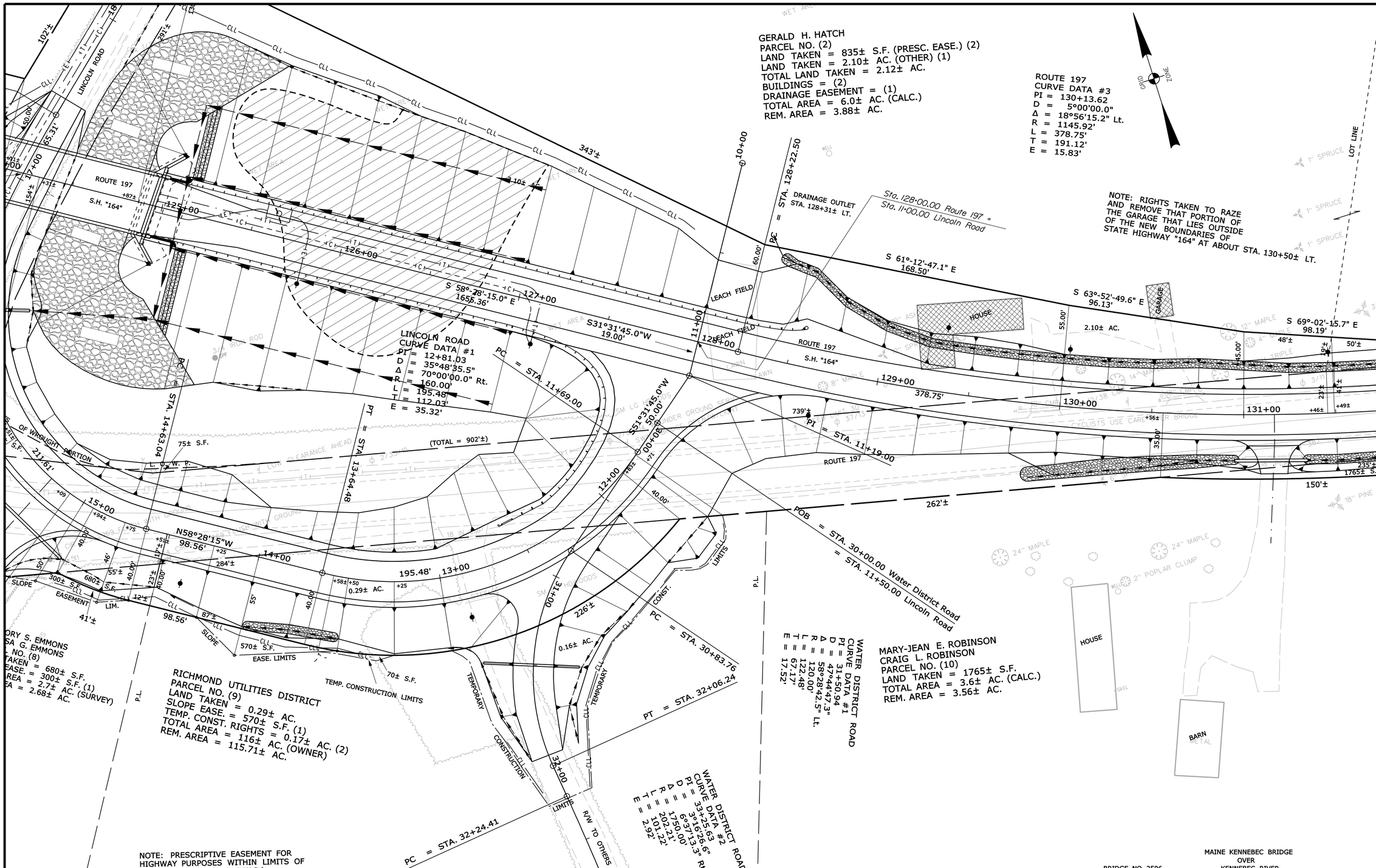

THIS PLAN WAS PREPARED IN CONNECTION WITH THE DEPARTMENT'S ACQUISITION OF REAL PROPERTY FOR TRANSPORTATION PURPOSES. IT CANNOT BE USED TO ESTABLISH LEGAL BOUNDARIES BETWEEN ABUTTING PROPERTY OWNERS.

SYMBOLS

- (WELL) WELL
- GRADING LIMIT LINE
- CONSTRUCTION LIMIT LINE
- PROPERTY LINE - PL
- LIMITS OF WROUGHT PORTION (L.O.W.P.)
- NEW RIGHT OF WAY
- NEW ROW WITHIN EXIST. ROW
- CONTROL OF ACCESS
- IP or IPF (IRON PIPE or PIN FOUND)
- S.T. (SEPTIC TANK)
- (ROW MONUMENT)
- BM (TRAVERSE POINT)
- WATER LINE
- GAS LINE
- ELECTRIC LINE
- TELEPHONE LINE
- SEWER LINE

ITEM	TECH	CHECKED
BASE MAP		
EXIST. R/W	D.W.B.	
PROP. LINES	D.W.B.	
AREAS	D.W.B.	P.N.S.

STATE OF MAINE
DEPARTMENT OF TRANSPORTATION
16 STATE HOUSE STATION - AUGUSTA, ME 04333-0016
RICHMOND-DRESDEN
RIGHT OF WAY MAP

MAINE KENNEBEC BRIDGE OVER KENNEBEC RIVER
BRIDGE NO. 2506
WIN 12674.00

REVISIONS

NO.	DATE	DESCRIPTION	BY
1	10-24-12	PARCEL NO. (2) HAS BEEN ACQUIRED	D.W.B.

PLAN FILED IN PLAN BOOK PAGE COUNTY RECORD

NO.	GRANTOR	INSTRUMENT	DATE	BOOK	PAGE
	PART I	COND.	7/24/12	4549	52
	PART II	COND.	2/26/13	4633	2

DAVID BERNHARDT
COMMISSIONER
KENNETH L. SWEENEY
CHIEF ENGINEER
DATE

STATE OF MAINE
PETER A. BELANGER 1341
PROFESSIONAL LAND SURVEYOR

STATE HIGHWAY "164"
ROUTE 197
DRESDEN LINCOLN COUNTY
FEDERAL AID PROJECT NO. BH-1267(400) PART I, II

JULY 2012 | RIGHT-OF-WAY MAP | D.O.T. FILE NO. 8-174
SCALE 1" = 25' | SHEET 5 OF 6

SHEET NUMBER
213
OF 238

Filename: ...\00\ROW\MSTA\005_RWPLAN5.dgn Division: BRIDGE Username: dona.damren Date:3/27/2013

GERALD H. HATCH
PARCEL NO. (2)
LAND TAKEN = 835± S.F. (PRESC. EASE.) (2)
LAND TAKEN = 2.10± AC. (OTHER) (1)
TOTAL LAND TAKEN = 2.12± AC.
BUILDINGS = (2)
DRAINAGE EASEMENT = (1)
TOTAL AREA = 6.0± AC. (CALC.)
REM. AREA = 3.88± AC.

ROUTE 197
CURVE DATA #3
PI = 130+13.62
D = 5°00'00.0"
Δ = 18°56'15.2" Lt.
R = 1145.92'
L = 378.75'
T = 191.12'
E = 15.83'

GRID ZONE

NOTE: RIGHTS TAKEN TO RAZE AND REMOVE THAT PORTION OF THE GARAGE THAT LIES OUTSIDE OF THE NEW BOUNDARIES OF STATE HIGHWAY "164" AT ABOUT STA. 130+50± LT.

GERALD H. HATCH
PARCEL NO. (3)
LAND TAKEN = 1850± S.F. (1)
TEMP. CONST. RIGHTS = 435± S.F. (1)
TOTAL AREA = 2.9± AC. (CALC.)
REM. AREA = 2.86± AC.

N/F
ROBERT H. CALL

LINCOLN COUNTY COMMISSIONERS RECORDS
VOL. 4 PAGE 134
1809
2.5 RODS

DREW W. PILGRIM
SUSANNE F. PILGRIM
ITEM NO. (11)
TEMP. CONST. RIGHTS = 110± S.F. (1)
TOTAL AREA = 2.6± AC. (DEED)

MARY-JEAN E. ROBINSON
CRAIG L. ROBINSON
PARCEL NO. (10)
LAND TAKEN = 1765± S.F.
TOTAL AREA = 3.6± AC. (CALC.)
REM. AREA = 3.56± AC.

WATER DISTRICT ROAD
CURVE DATA #1
PI = 31+50.94
D = 47°44'47.3"
Δ = 58°28'42.5" Lt.
R = 120.00'
L = 122.48'
T = 67.17'
E = 17.52'

CURVE DATA #4
PI = 135+54.51
D = 0°07'30.0"
Δ = 0°52'59.3" Rt.
R = 45836.62'
L = 706.52'
T = 353.26'
E = 1.36'

NOTE: SEE SHEET NO. 2 FOR PARCEL NO. (12)

THIS PLAN WAS PREPARED IN CONNECTION WITH THE DEPARTMENT'S ACQUISITION OF REAL PROPERTY FOR TRANSPORTATION PURPOSES. IT CANNOT BE USED TO ESTABLISH LEGAL BOUNDARIES BETWEEN ABUTTING PROPERTY OWNERS.

SYMBOLS
IP or IPF (IRON PIPE or PIN FOUND)
ST. (SEPTIC TANK)
BM (TRAVERSE POINT)
(ROW MONUMENT)
WELL
GRADING LIMIT LINE
CONSTRUCTION LIMIT LINE
PROPERTY LINE
LIMITS OF "RIGHT" PORTION (L.O.W.P.)
WATER LINE
GAS LINE
ELECTRIC LINE
TELEPHONE LINE
SEWER LINE
NEW RIGHT OF WAY
NEW ROW WITHIN EXIST. ROW
CONTROL OF ACCESS

ITEM	TECH	CHECKED
BASE MAP		
EXIST. R/W	D.W.B.	
PROP. LINES	D.W.B.	
AREAS	D.W.B.	P.N.S.

STATE OF MAINE
DEPARTMENT OF TRANSPORTATION
16 STATE HOUSE STATION - AUGUSTA, ME 04333-0016
RICHMOND-DRESDEN
RIGHT OF WAY MAP

MAINE KENNEBEC BRIDGE
OVER
KENNEBEC RIVER

BRIDGE NO. 2506 WIN 12674.00

REVISIONS

NO.	DATE	DESCRIPTION	BY
1	10-24-12	PARCEL NO. (2) HAS BEEN ACQUIRED	D.W.B.

PLAN FILED IN PLAN BOOK PAGE COUNTY RECORD

NO.	GRANTOR	INSTRUMENT	DATE	BOOK	PAGE
	PART I	COND.	7/24/12	4549	52
	PART II	COND.	2/26/13	4633	2

DAVID BERNHARDT
COMMISSIONER
KENNETH L. SWEENEY
CHIEF ENGINEER
DATE

STATE OF MAINE
PETER A. BELANGER
1341
PROFESSIONAL LAND SURVEYOR

STATE HIGHWAY "164"
ROUTE 197
DRESDEN LINCOLN COUNTY
FEDERAL AID PROJECT NO. BH-1267(400) PART I, II

JULY 2012 RIGHT-OF-WAY MAP
SCALE 1" = 25' SHEET 6 OF 6
D.O.T. FILE NO. 8-174

SHEET NUMBER
214
OF 238

Filename: ...\00\ROW\MSTA\006_RWPLAN6.dgn Division: BRIDGE Username: dona.domren Date:3/27/2013

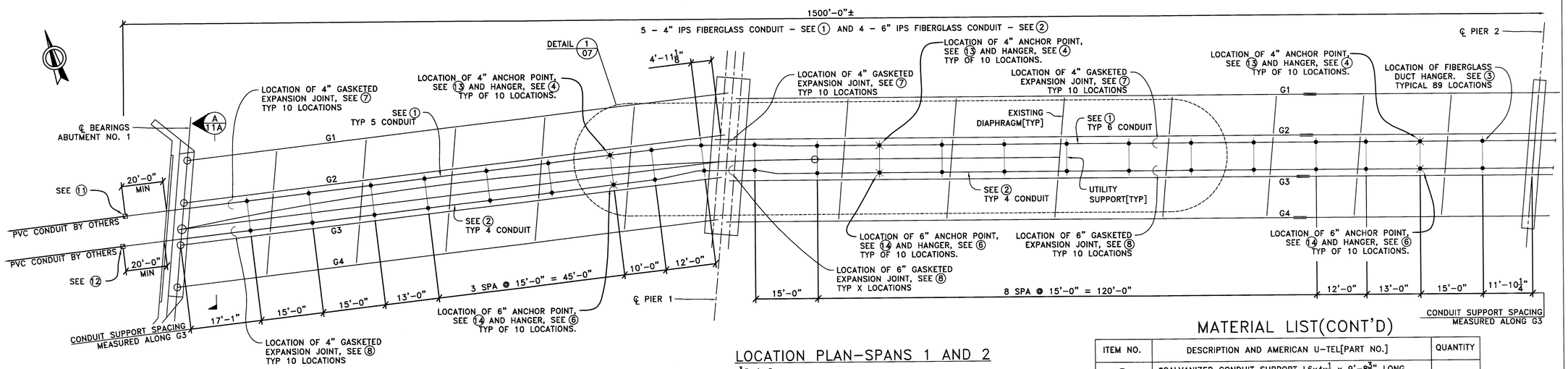

LOCATION PLAN-SPANS 1 AND 2

3/32"=1'-0"

GENERAL NOTES

1) ALL ITEMS WITH PART NUMBERS ARE AMERICAN U-TEL, INC. STANDARD ITEMS SUPPLIED BY:
AMERICAN U-TEL, INC.
9760 SMITH ROAD
WILLOUGHBY, OHIO 44094
UNLESS OTHERWISE NOTED.
2) THESE DRAWINGS ARE BASED ON AVAILABLE BRIDGE DESIGN DRAWINGS. CONTRACTOR SHALL VERIFY ALL DIMENSIONS BEFORE FABRICATION AND INSTALLATION OF CONDUITS AND SUPPORTS.
3) SUBGRADE CONDUIT INSTALLATION BY OTHERS.
4) FIBERGLASS DUCT SUPPORTS ARE DESIGNED FOR A MAXIMUM CABLE LOAD OF 8.0 LBS PER FT PER 4" DUCT AND 12.0 LBS PER FT PER 6" DUCT. THE TOTAL CONDUIT LOAD AT A SUPPORT IS 1500 LBS MAXIMUM.
5) 4" AND 6" STRAIGHT COUPLINGS SHALL BE INSTALLED AS REQUIRED.
6) THE CONTRACTOR IS REQUIRED TO COMPLY WITH ALL NATIONALLY ACCEPTED SAFETY PRACTICES, OSHA AND ANY OTHER SAFETY REQUIREMENTS IMPOSED BY THE OWNER, AGENCY OR ANY OTHER PARTIES WHICH MAY HAVE JURISDICTION OVER SAFETY.
7) DESIGN OF 4" DUCT BASED ON AMERICAN U-TEL PART NO. [12370] FIBERGLASS CONDUIT WITH THE FOLLOWING CHARACTERISTICS LISTED IN A THRU D:
A)4" FIBERGLASS DUCTS ARE TO HAVE THREADED JOINTS WITH 3000 LBS PULL OUT STRENGTH UNBONDED.
B)4" DIA. FIBERGLASS DUCTS ARE TO HAVE ULTIMATE TENSILE STRENGTH OF 10,500 PSI PER ASTM D-2105.
C)4" IPS:4.5" O.D. x 4.36" I.D. x 30 FT LENGTH
D)CAPABLE OF MAIN/INTERIOR HANGER SUPPORT SPANS OF UP TO 21.2 FT. FOR 3 LBS. PER FT. CABLE, 17.2 FT. FOR 8 LBS. PER FT. CABLE, AND 25.5 FT. FOR 1 LBS. PER FT. CABLE BASED ON NOT EXCEEDING 5/8" MIDSPAN DEFLECTION.
8) FOR THE 6" IPS CONDUIT, THE CONDUIT TO BE ABLE TO SPAN 17FT WITH A MAXIMUM LOAD OF 15 LBS PER FOOT.
9) DURING INSTALLATION, THE DUCT EXPANSION JOINTS MUST BE SET TO THE PROPER LENGTH ACCORDING TO THE AMBIENT TEMPERATURE. REFER TO THE EXPANSION JOINT MANUFACTURER'S INSTRUCTIONS.
10) ALL CONNECTION BETWEEN DUCT SECTIONS, EXPANSION JOINTS, ADAPTERS, AND COUPLINGS ARE TO BE BONDED. REFER TO MANUFACTURER'S INSTRUCTIONS FOR BONDING PROCEDURES.
11) CAP THE ENDS OF THE DUCTS IF THE UNDERGROUND PORTION OF THE WORK IS NOT DONE AT THE SAME TIME AS THE BRIDGE PORTION.
12) ALL ATTACHMENT RODS, SPACER RODS, NUTS, LOCK AND FLAT WASHERS IN ITEMS 3 TO 6 TO BE ZINC PLATED.
13) DESIGN AND INSTALLATION OF UTILITY SUPPORT AS SHOWN ON THESE DRAWINGS.
14) ALL UTILITY SUPPORT STEEL TO BE ASTM A36, MIN Fy=36KSI, GALVANIZED. ALL HIGH STRENGTH BOLTS FOR UTILITY SUPPORTS TO BE ASTM A325 WITH NUTS AND HARDENED FLAT WASHERS, GALVANIZED. PIPE SLEEVES TO BE ASTM A53, GALVANIZED.
15) ANGLES, PLATES AND STEEL SLEEVES TO BE GALVANIZED PER ASTM A123. HIGH STRENGTH BOLTS AND HARDENED WASHERS TO BE GALVANIZED PER ASTM A153.
16) ALL HIGH STRENGTH BOLTS TO BE TIGHTENED PER A.I.S.C. "STRUCTURAL JOINTS USING ASTM A325 OR A490 BOLTS", SECTION 5 TO A MINIMUM FASTENER TENSION OF 28 KIPS. GALVANIZED SURFACES IN CONTACT AT CONNECTIONS SHALL BE HAND ROUGHENED PER SECTION 3(C).
17) CONDUIT SUPPORT SPACING CAN BE ADJUSTED TO MISS EXISTING OBSTRUCTIONS (SPLICES, PLATES, ETC.) AS REQUIRED AS LONG AS THE SUPPORT SPACING DOES NOT EXCEED 16 FEET.
18) THIS DESIGN IS FOR THE EXPRESS PURPOSE FOR USE ON THE MAINE KENNEBEC BRIDGE OVER THE KENNEBEC RIVER IN RICHMOND-BRESDEN, MAINE AND IS NOT TO BE USED ELSEWHERE.
19) ALL OF THE 6" CONDUIT TO BE UTILIZED BY CENTRAL MAINE POWER. FOUR OF THE 4" CONDUIT TO BE UTILIZED BY FAIRPOINT COMMUNICATIONS. ONE 4" CONDUIT TO BE UTILIZED BY TIME WARNER CABLE.

MATERIAL LIST

ITEM NO.	DESCRIPTION AND AMERICAN U-TEL[PART NO.]	QUANTITY
1	4" IPS - 4 1/2" O.D. FIBERGLASS DUCT WITH THREADED ENDS [12370-04]. SEE G.N. NO'S 7 & 10.	7500 FT
2	6" IPS - 6 1/2" O.D. FIBERGLASS DUCT WITH THREADED ENDS [12370-06]. SEE G.N. NO'S 8 & 10.	6000 FT
3	FIBERGLASS 2Wx3H STANDARD 4" DUCT HANGER. SEE G.N. NO. 12.	87
4	FIBERGLASS 2Wx3H MODIFIED 4" DUCT HANGER. SEE G.N. NO. 12. SEE DWG 6 FOR DETAILS.	10
5	FIBERGLASS 2Wx2H STANDARD 6" DUCT HANGER. SEE G.N. NO. 12.	82
6	FIBERGLASS 2Wx2H MODIFIED 6" DUCT HANGER. SEE G.N. NO. 12. SEE DWG 6 FOR DETAILS.	10
7	4" GASKETED EXPANSION JOINT [12352-04]. SEE G.N. NO'S 9 & 10.	50
8	6" GASKETED EXPANSION JOINT [12352-06]. SEE G.N. NO'S 9 & 10.	40
9	4" STRAIGHT COUPLING [12348-04]. SEE G.N. NO'S 5 & 10	35
10	6" STRAIGHT COUPLING [12348-06]. SEE G.N. NO'S 5 & 10	36
11	4" PVC ADAPTER TO FIBERGLASS [12357-04].	10
12	6" PVC ADAPTER TO FIBERGLASS [12357-06].	8
13	4" SPLIT ANCHOR RINGS [12351-04]. SEE G.N. NO. 10.	100
14	6" SPLIT ANCHOR RINGS [12351-06]. SEE G.N. NO. 10.	80
15	ADHESIVE KIT [12358].	120
16	*GALVANIZED CONDUIT SUPPORT L6x4x1/2 x 9'-7 3/8" LONG. SEE G.N. NO'S 14 & 15.	87
17	*GALVANIZED CONDUIT SUPPORT L6x4x1/2 x 9'-7 3/8" LONG. SEE G.N. NO'S 14 & 15.	9
18	*GALVANIZED CONDUIT SUPPORT L6x4x1/2 x 0'-6" LONG. SEE G.N. NO'S 14 & 15.	220
19	*3/4" DIA. ASTM A325 FASTENER SET: 3/4" DIA. x 2 1/2" LONG TYPE 1 BOLT. ONE HEX NUT AND TWO HARDENED FLAT WASHERS. ALL PARTS GALVANIZED. SEE G.N. NO. 14 TO 16.	930
20	*GALVANIZED CONDUIT SUPPORT L6x4x1/2 x 9'-7 3/8" LONG. SEE G.N. NO'S 14 & 15. SEE DWG 19 FOR DETAILS.	1
21	*GALVANIZED CONDUIT SUPPORT L6x4x1/2 x 9'-8 3/8" LONG. SEE G.N. NO'S 14 & 15. SEE DWG 19 FOR DETAILS.	1
22	*GALVANIZED CONDUIT SUPPORT L6x4x1/2 x 9'-8 3/8" LONG. SEE G.N. NO'S 14 & 15. SEE DWG 19 FOR DETAILS.	7

MATERIAL LIST(CONT'D)

ITEM NO.	DESCRIPTION AND AMERICAN U-TEL[PART NO.]	QUANTITY
23	*GALVANIZED CONDUIT SUPPORT L6x4x1/2 x 9'-8 3/8" LONG. SEE G.N. NO'S 14 & 15. SEE DWG 19 FOR DETAILS.	1
24	*GALVANIZED CONDUIT SUPPORT L6x4x1/2 x 9'-7 3/8" LONG. SEE G.N. NO'S 14 & 15. SEE DWG 19 FOR DETAILS.	2
25	*GALVANIZED CONDUIT SUPPORT L6x4x1/2 x 9'-7 3/8" LONG. SEE G.N. NO'S 14 & 15. SEE DWG 19 FOR DETAILS.	2
26	5" DIA. ASTM A53, SCH. 40 STEEL PIPE, 25'-0" LONG, GALVANIZED. SEE G.N. NO. 14 & 15.	10
27	8" DIA. ASTM A53, SCH. 40 STEEL PIPE, 25'-0" LONG, GALVANIZED. SEE G.N. NO. 14 & 15.	8
28	4" FIBERGLASS SWEEP ELBOW 11 1/4°, R=42" [12300-04]. SEE G.N. NO. 10.	15
29	6" FIBERGLASS SWEEP ELBOW 11 1/4°, R=42" [12300-06]. SEE G.N. NO. 10.	16
30	FIBERGLASS 2Wx3H MODIFIED 4" DUCT HANGER. SEE G.N. NO. 12. SEE DWG 10 FOR DETAILS.	2
31	FIBERGLASS 2Wx2H MODIFIED 6" DUCT HANGER. SEE G.N. NO. 12. SEE DWG 10 FOR DETAILS.	7
32	*MANHOLE CAGE. SEE DWGS 12 TO 20 FOR DETAILS.	1

*THESE STEEL ITEMS TO BE SUPPLIED BY THE BRIDGE GENERAL CONTRACTOR

REV	COMMENTS	BY	DATE
3	MODIFY MATERIAL LIST	AE	03/04/13
2	APPROVAL	AE	03/04/13
1	APPROVAL	AE	01/24/13
0	APPROVAL	AE	11/27/12

MAINE KENNEBEC BRIDGE OVER THE KENNEBEC RIVER IN RICHMOND-DRESDEN MAINE

LOCATION PLAN
CONDUIT SUPPORTS

ANDREW J. ELD, P.E.

STATE OF MAINE ANDREW J. ELD 10262 LICENSED PROFESSIONAL ENGINEER

PE NO. 10262

JOB NO. 17-12 | UTILITY CONDUIT SUPPORTS

FURNISHED BY: AMERICAN U-TEL
9760 SMITH ROAD
WILLOUHGBY, OHIO 44094
(440)946-6027 FAX:(440)946-7285

CHECKED BY: AE DATE: 11-23-12
DRAWN BY: WS DATE: 11-06-12
DRAWING NO: 17-12-01 SH. 1 OF 24

3/22/2013 BLU-PRINTS UNLIMITED INC. 20 Howard St New London CT 860.444.6564 plots@bpunlimpro.com

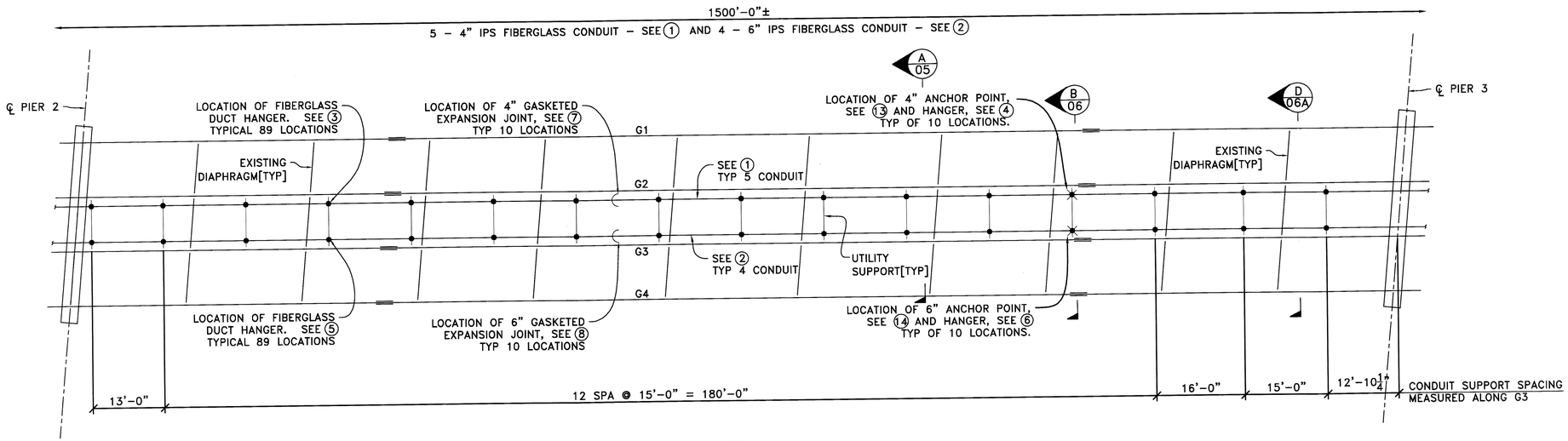

LOCATION PLAN-SPAN 3

3/32"=1'-0"

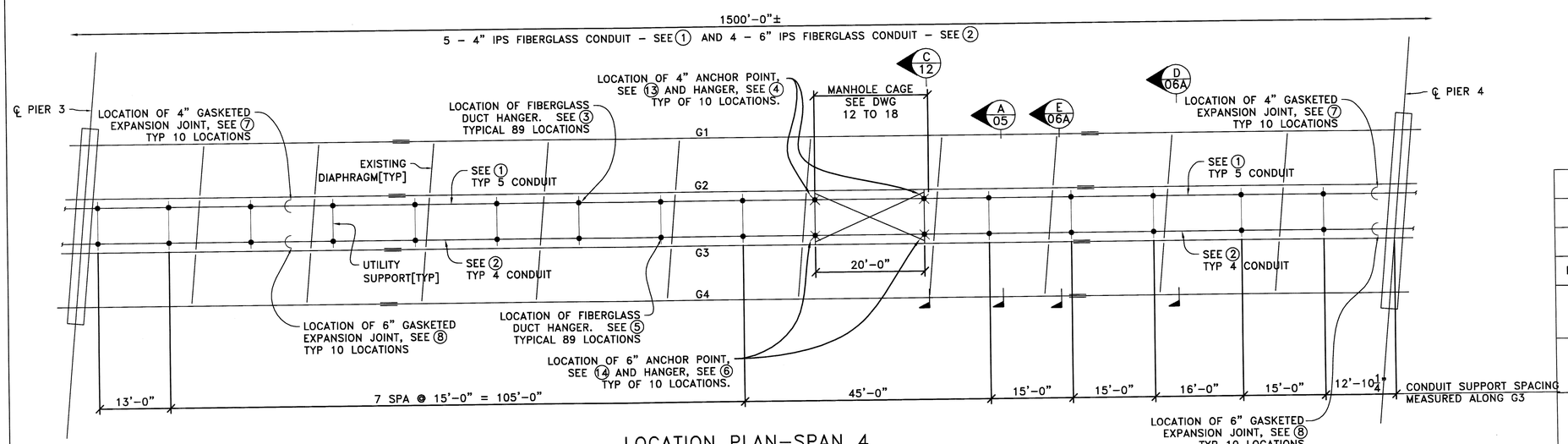

LOCATION PLAN-SPAN 4

3/32"=1'-0"

REV	COMMENTS	BY	DATE
2	APPROVAL	AE	03/04/13
1	APPROVAL	AE	01/24/13
0	APPROVAL	AE	11/27/12

MAINE KENNEBEC BRIDGE OVER THE KENNEBEC RIVER IN RICHMOND-DRESDEN MAINE

LOCATION PLAN 2
CONDUIT SUPPORTS

ANDREW J. ELD, P.E.

STATE OF MAINE ANDREW J. ELD 10262 LICENSED PROFESSIONAL ENGINEER
PE NO. 10262

JOB NO. 17-12 | UTILITY CONDUIT SUPPORTS

FURNISHED BY: AMERICAN U-TEL
9760 SMITH ROAD
WILLOUHGBY, OHIO 44094
(440)946-6027 FAX:(440)946-7285

CHECKED BY: AE | DATE: 11-23-12
DRAWN BY: WS | DATE: 11-06-12
DRAWING NO: 17-12-02 | SH. 2 OF 24

3/22/2013 BLU-PRINTS UNLIMITED INC 20 Howard St New London CT 860.444.6064 plots@bpuwpro.com

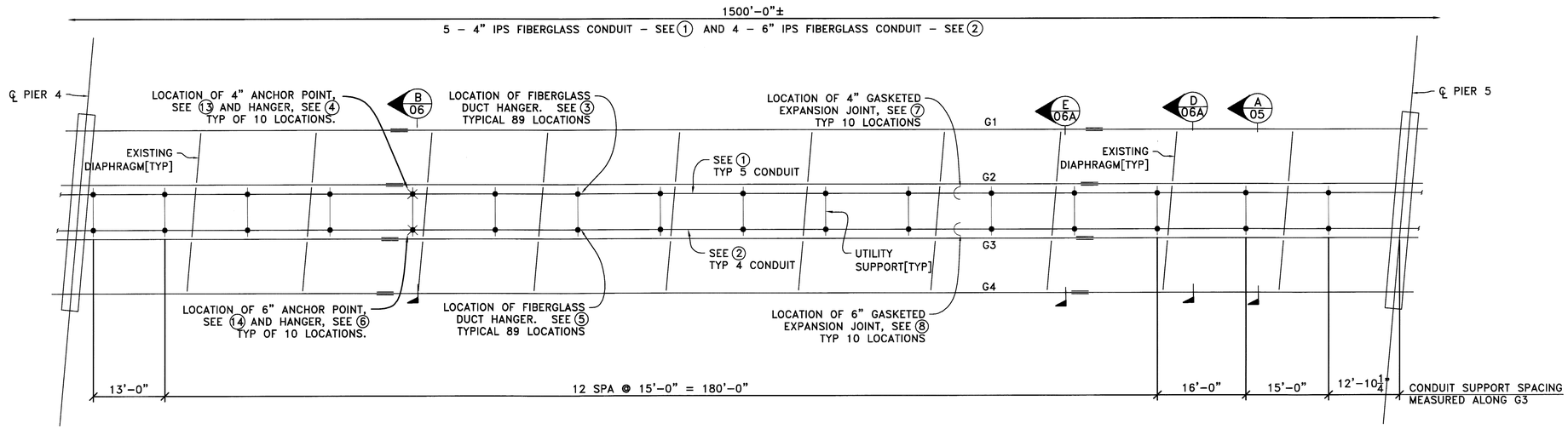

LOCATION PLAN-SPAN 5

3/32"=1'-0"

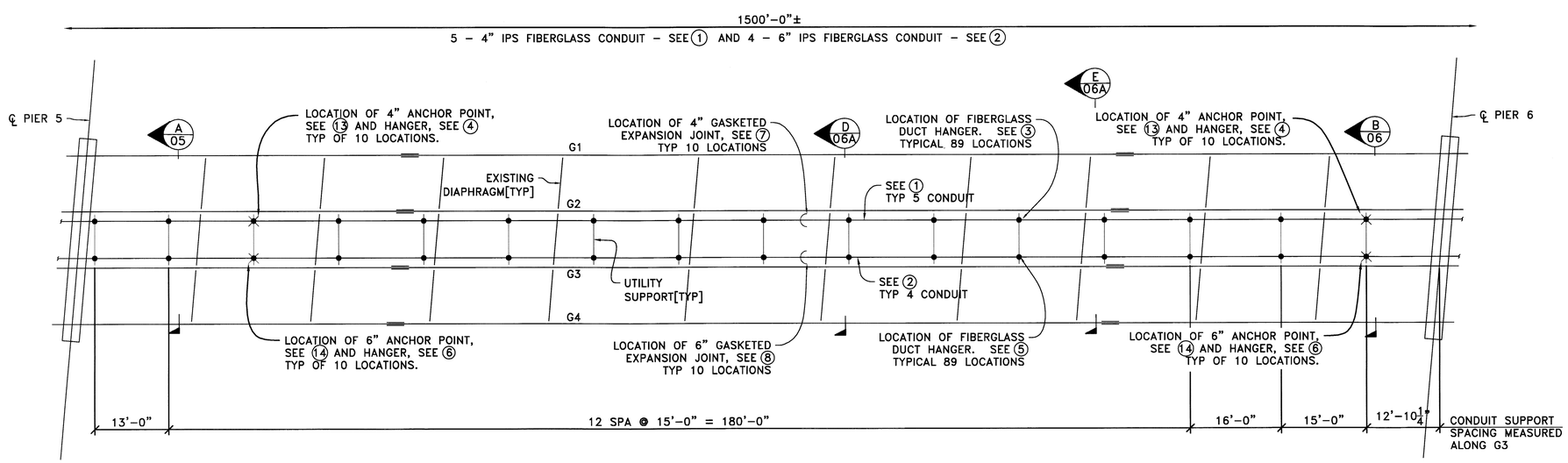

LOCATION PLAN-SPAN 6

3/32"=1'-0"

REV	COMMENTS	BY	DATE
2	APPROVAL	AE	03/04/13
1	APPROVAL	AE	01/24/13
0	APPROVAL	AE	11/27/12

MAINE KENNEBEC BRIDGE OVER THE KENNEBEC RIVER IN RICHMOND-DRESDEN MAINE

LOCATION PLAN 3
CONDUIT SUPPORTS

ANDREW J. ELD, P.E.

JOB NO. 17-12

UTILITY CONDUIT SUPPORTS

STATE OF MAINE ANDREW J. ELD 10262 LICENSED PROFESSIONAL ENGINEER

PE NO. 10262

FURNISHED BY: AMERICAN U-TEL
9760 SMITH ROAD
WILLOUHGBY, OHIO 44094
(440)946-6027 FAX:(440)946-7285

CHECKED BY: AE DATE: 11-23-12
DRAWN BY: WS DATE: 11-06-12
DRAWING NO: 17-12-03 SH. 3 OF 24

3/22/2013 BLU-PRINTS UNLIMITED INC 20 Howard St New London CT 860.444.6564 plots@bpuwepo.com

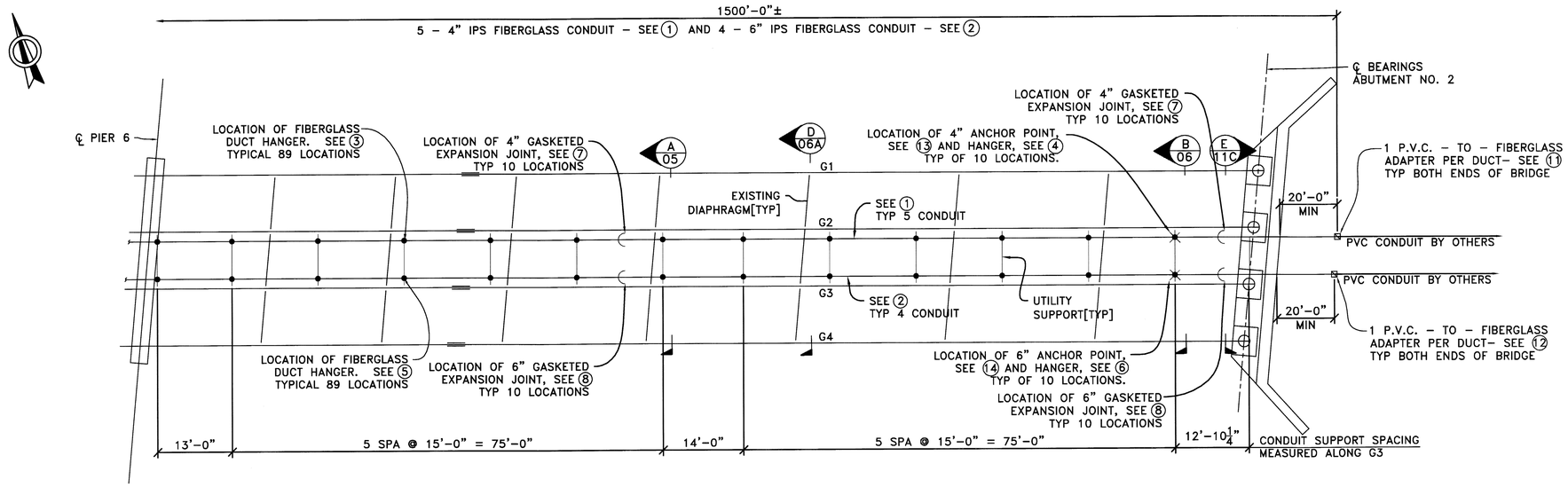

LOCATION PLAN-SPAN 7

3/32"=1'-0"

REV	COMMENTS	BY	DATE
2	APPROVAL	AE	03/04/13
1	APPROVAL	AE	01/24/13
0	APPROVAL	AE	11/27/12

MAINE KENNEBEC BRIDGE OVER
THE KENNEBEC RIVER
IN RICHMOND-DRESDEN MAINE

LOCATION PLAN 4
CONDUIT SUPPORTS

ANDREW J. ELD, P.E.

JOB NO. 17-12

UTILITY CONDUIT SUPPORTS

STATE OF MAINE
ANDREW J. ELD
10262
LICENSED
PROFESSIONAL ENGINEER
PE NO. 10262

FURNISHED BY: AMERICAN U-TEL
9760 SMITH ROAD
WILLOUHGBY, OHIO 44094
(440)946-6027 FAX:(440)946-7285

CHECKED BY: AE DATE: 11-23-12
DRAWN BY: WS DATE: 11-06-12
DRAWING NO: 17-12-04 SH. 4 OF 24

3/22/2013 BLU-PRINTS UNLIMITED INC. 20 Howard St New London CT 860.444.6564 plots@bpuncpro.com

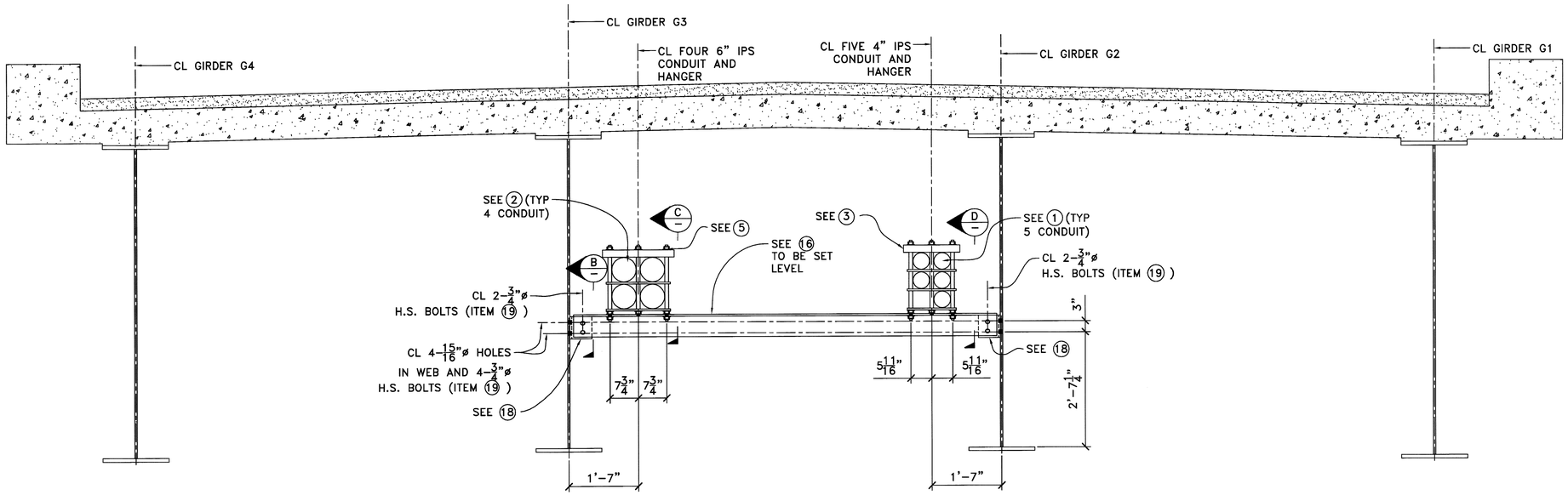

SECTION A01 A02 A03 A04 — STANDARD HANGER SUPPORT SPANS 3 TO 7 AND THE FOUR NON-ANCHOR SUPPORT ON SPAN 2 CLOSEST TO PIER 2

3/4"=1'-0

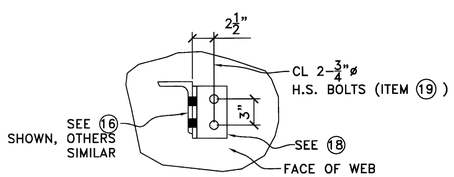

SECTION B-07 B08 B10

1 1/2"=1'-0

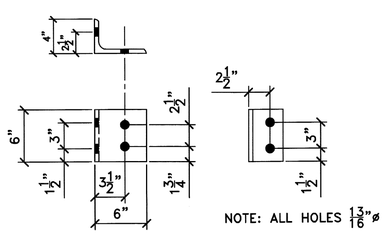

NOTE: ALL HOLES 1 3/16"ø

ITEM NO. 18 L6x4x1/2

1 1/2"=1'-0

4" LEG BOLTED TO GIRDER

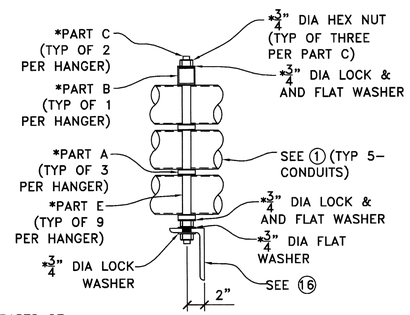

*INDICATES PARTS OF MODIFIED AMERICAN U-TEL HANGER PACKAGE FOR MATERIAL ITEM NO. 2

SECTION D-07 D08 D10

1 1/2"=1'-0

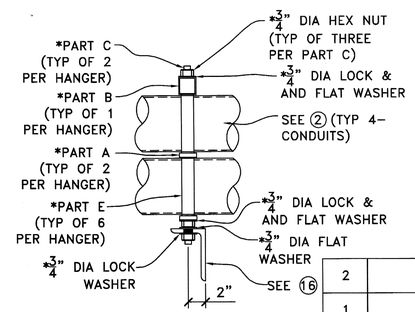

*INDICATES PARTS OF MODIFIED AMERICAN U-TEL HANGER PACKAGE FOR MATERIAL ITEM NO. 2

SECTION C-07 C08 C10

1 1/2"=1'-0

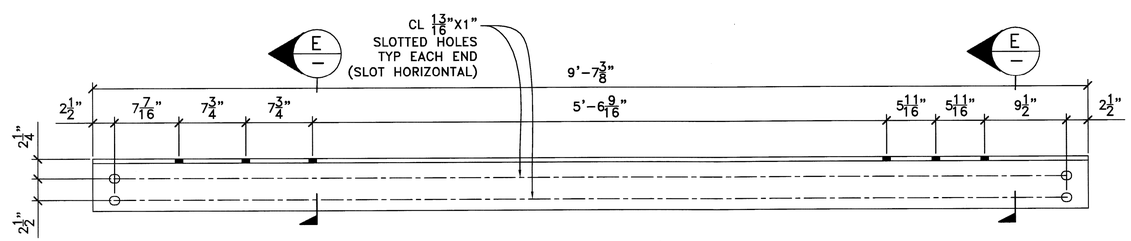

ITEM NO. 16 L6x4x1/2

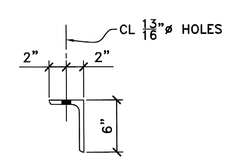

SECTION E-

1 1/2"=1'-0

REV	COMMENTS	BY	DATE
2	APPROVAL	AE	03/04/13
1	APPROVAL	AE	01/24/13
0	APPROVAL	AE	11/27/12

MAINE KENNEBEC BRIDGE OVER THE KENNEBEC RIVER IN RICHMOND-DRESDEN MAINE

DETAILS 1
CONDUIT SUPPORTS

ANDREW J. ELD, P.E.

JOB NO. 17-12 | UTILITY CONDUIT SUPPORTS

STATE OF MAINE — ANDREW J. ELD — 10262 — LICENSED PROFESSIONAL ENGINEER

PE NO. 10262

FURNISHED BY: AMERICAN U-TEL
9760 SMITH ROAD
WILLOUHGBY, OHIO 44094
(440)946-6027 FAX:(440)946-7285

CHECKED BY: AE DATE: 11-23-12
DRAWN BY: WS DATE: 11-06-12
DRAWING NO: 17-12-05 SH. 5 OF 24

3/22/2013 BLU-PRINTS UNLIMITED INC 20 Howard St New London CT 860.444.6564 plots@bpunprints.com

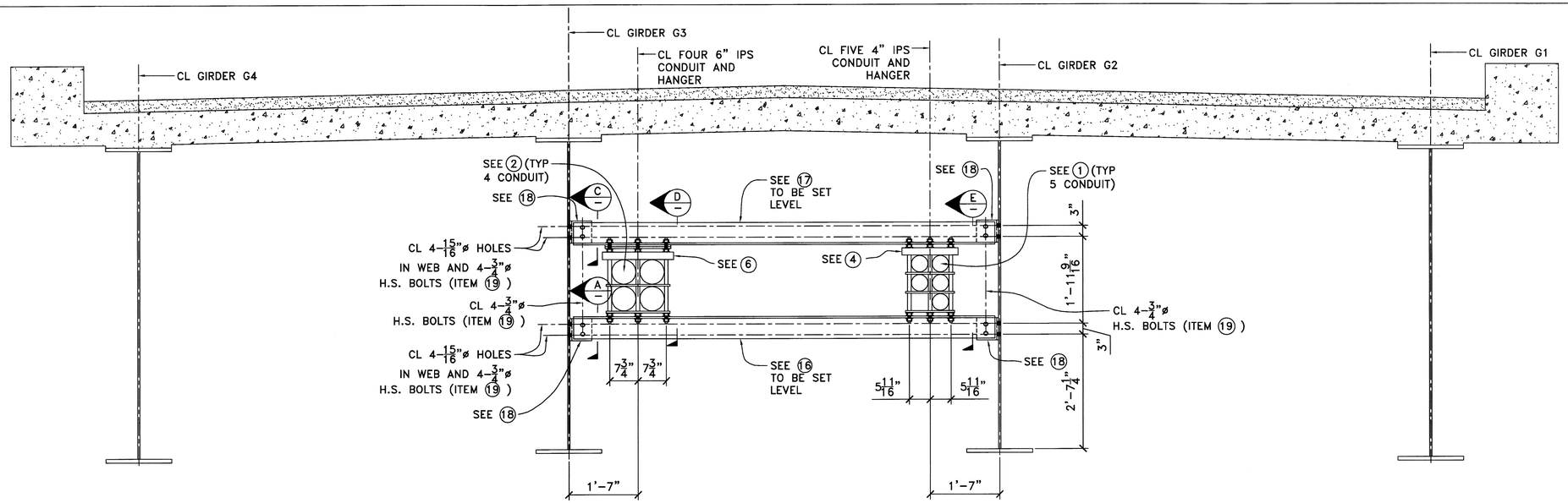

SECTION (B/01)(B/02)(B/03)(B/04) $\frac{3}{4}$"=1'-0

STANDARD ANCHOR HANGER SUPPORT SPANS 3 TO 7 AND THE ANCHOR SUPPORT ON SPAN 2 CLOSEST TO PIER 2

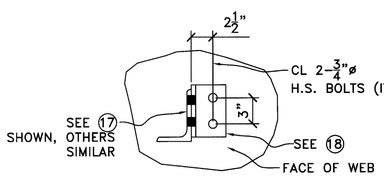

SECTION (C/–)(C/08)(C/11)
$1\frac{1}{2}$"=1'-0

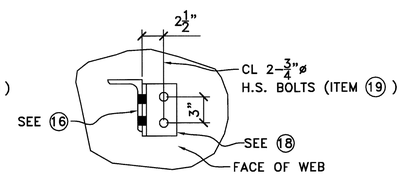

SECTION (A/–)(A/08)(A/11)
$1\frac{1}{2}$"=1'-0

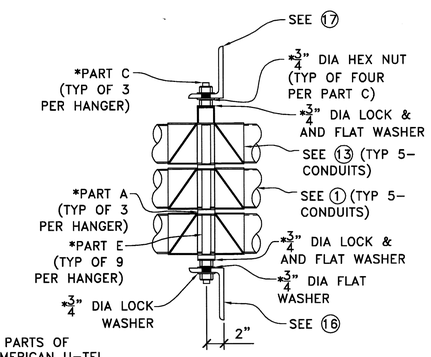

*INDICATES PARTS OF MODIFIED AMERICAN U-TEL HANGER PACKAGE FOR MATERIAL ITEM NO. 2

SECTION (D/–)(D/08)
$1\frac{1}{2}$"=1'-0

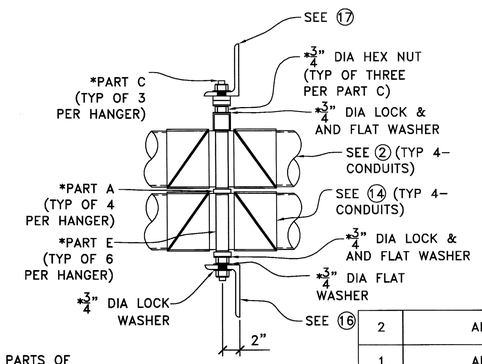

*INDICATES PARTS OF MODIFIED AMERICAN U-TEL HANGER PACKAGE FOR MATERIAL ITEM NO. 2

SECTION (E/–)(E/08)(E/11)
$1\frac{1}{2}$"=1'-0

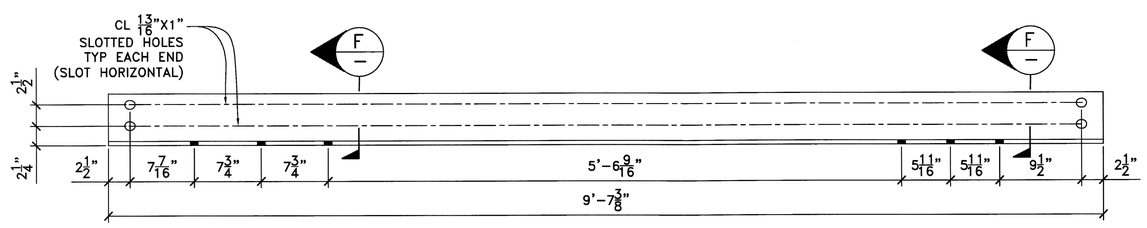

ITEM NO. 17 L6x4x$\frac{1}{2}$

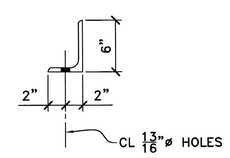

SECTION (F/–)
$1\frac{1}{2}$"=1'-0

REV	COMMENTS	BY	DATE
2	APPROVAL	AE	03/04/13
1	APPROVAL	AE	01/24/13
0	APPROVAL	AE	11/27/12

MAINE KENNEBEC BRIDGE OVER THE KENNEBEC RIVER IN RICHMOND-DRESDEN MAINE

DETAILS 2
CONDUIT SUPPORTS

ANDREW J. ELD, P.E.

STATE OF MAINE ANDREW J. ELD 10262 LICENSED PROFESSIONAL ENGINEER

PE NO. 10262

JOB NO. 17-12 | UTILITY CONDUIT SUPPORTS

FURNISHED BY: AMERICAN U-TEL
9760 SMITH ROAD
WILLOUHGBY, OHIO 44094
(440)946-6027 FAX:(440)946-7285

CHECKED BY: AE | DATE: 11-23-12
DRAWN BY: WS | DATE: 11-06-12
DRAWING NO: 17-12-06 | SH. 6 OF 24

3/22/2013 BLU-PRINTS UNLIMITED INC. 29 Howard St New London CT 860 444 6564 plots@blueprints.com

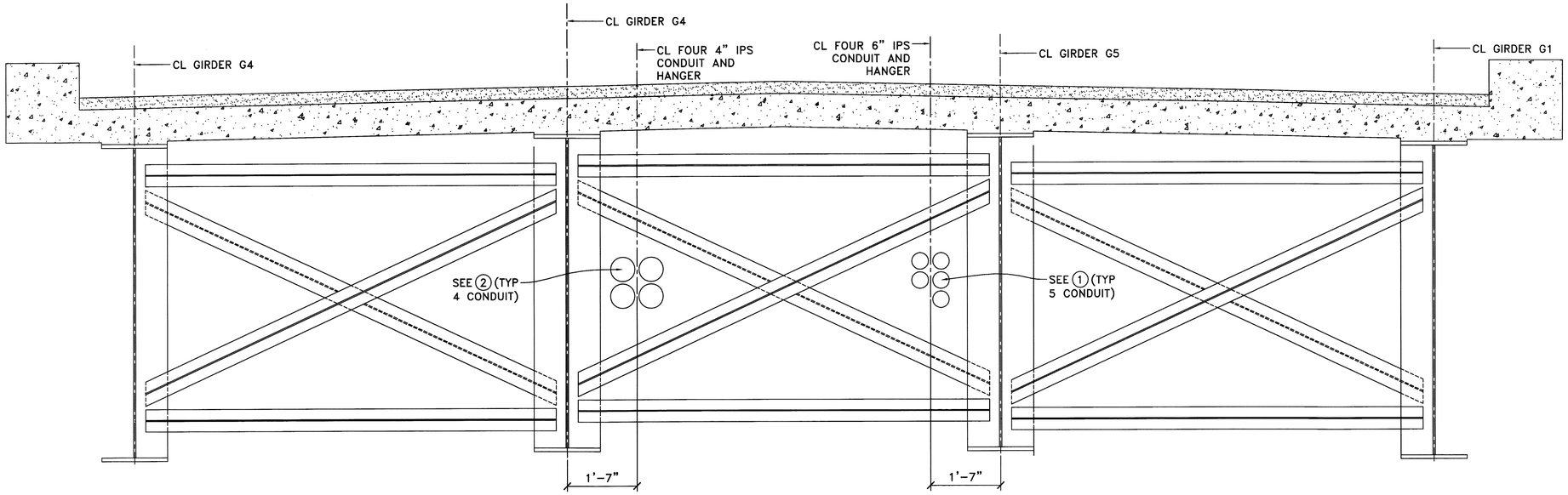

SECTION D02 D03 D04 CONDUIT SHOWN GOING THROUGH TYPE M DIAPHRAGM
$\frac{3}{4}$"=1'-0 SPAN 3 TO 7 AND TWO TYPE M DIAPHRAGMS ON SPAN 2 CLOSEST TO PIER 2

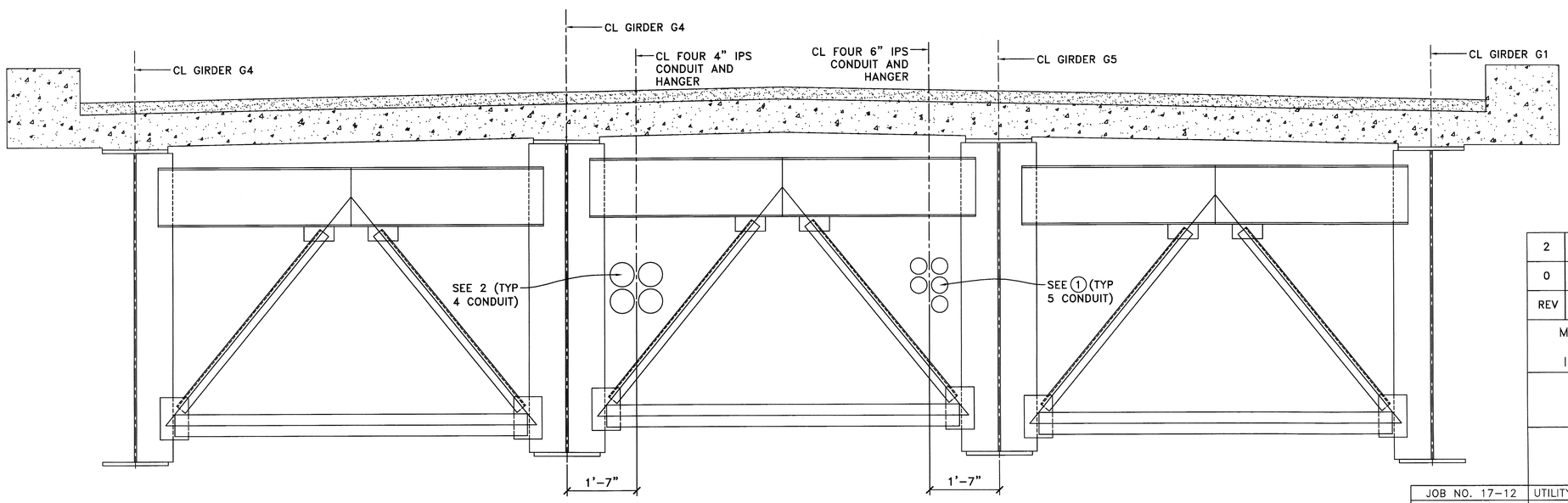

SECTION E02 E03 CONDUIT SHOWN GOING THROUGH TYPE D DIAPHRAGM
$\frac{3}{4}$"=1'-0 SPAN 3 TO 7 AND TYPE D DIAPHRAGM NEAR GIRDER SPLICE ON SPAN 2

REV	COMMENTS	BY	DATE
2	APPROVAL	AE	03/04/13
0	APPROVAL	AE	01/24/13

MAINE KENNEBEC BRIDGE OVER
THE KENNEBEC RIVER
IN RICHMOND–DRESDEN MAINE

DETAILS 3
CONDUIT SUPPORTS

ANDREW J. ELD, P.E.

JOB NO. 17–12

UTILITY CONDUIT SUPPORTS

STATE OF MAINE ANDREW J. ELD 10262 LICENSED PROFESSIONAL ENGINEER
PE NO. 10262

FURNISHED BY: AMERICAN U–TEL
9760 SMITH ROAD
WILLOUHGBY, OHIO 44094
(440)946–6027 FAX:(440)946–7285

CHECKED BY: AE DATE: 11–23–12
DRAWN BY: WS DATE: 11–06–12
DRAWING NO: 17–12–06A SH. 7 OF 24

3/22/2013 BLU-PRINTS UNLIMITED INC. 20 Howard St New London CT 860.444.6564 plots@bluesprint.com

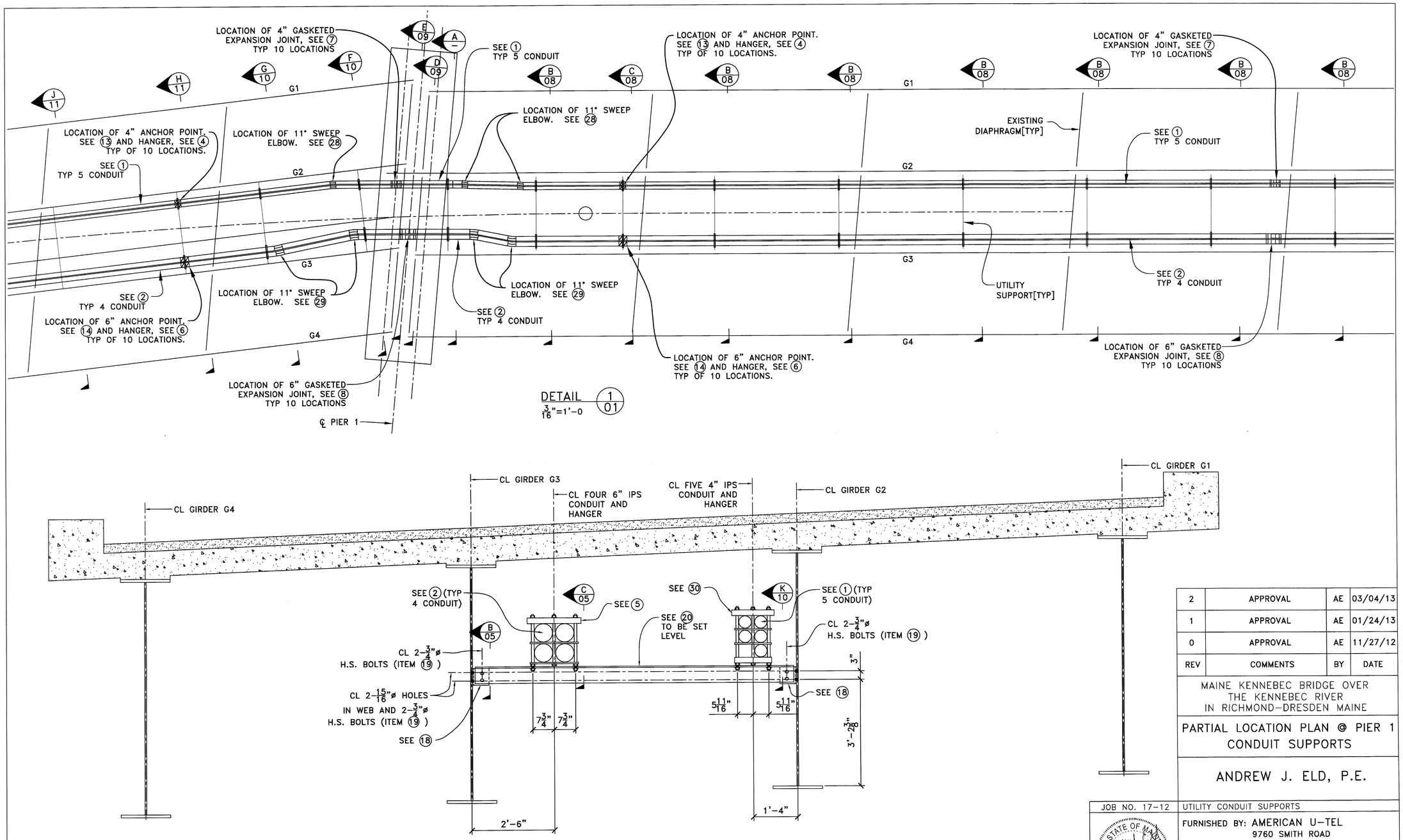

REV	COMMENTS	BY	DATE
2	APPROVAL	AE	03/04/13
1	APPROVAL	AE	01/24/13
0	APPROVAL	AE	11/27/12

MAINE KENNEBEC BRIDGE OVER THE KENNEBEC RIVER IN RICHMOND–DRESDEN MAINE

PARTIAL LOCATION PLAN @ PIER 1 CONDUIT SUPPORTS

ANDREW J. ELD, P.E.

JOB NO. 17-12

UTILITY CONDUIT SUPPORTS

STATE OF MAINE ANDREW J. ELD 10262 LICENSED PROFESSIONAL ENGINEER

PE NO. 10262

FURNISHED BY: AMERICAN U-TEL
9760 SMITH ROAD
WILLOUHGBY, OHIO 44094
(440)946-6027 FAX:(440)946-7285

CHECKED BY: AE DATE: 11-23-12

DRAWN BY: WS DATE: 11-06-12

DRAWING NO: 17-12-07 SH. 8 OF 24

3/22/2013 BLU-PRINTS UNLIMITED INC. 20 Howard St New London CT 860.444.6564 prints@bpunlmpro.com

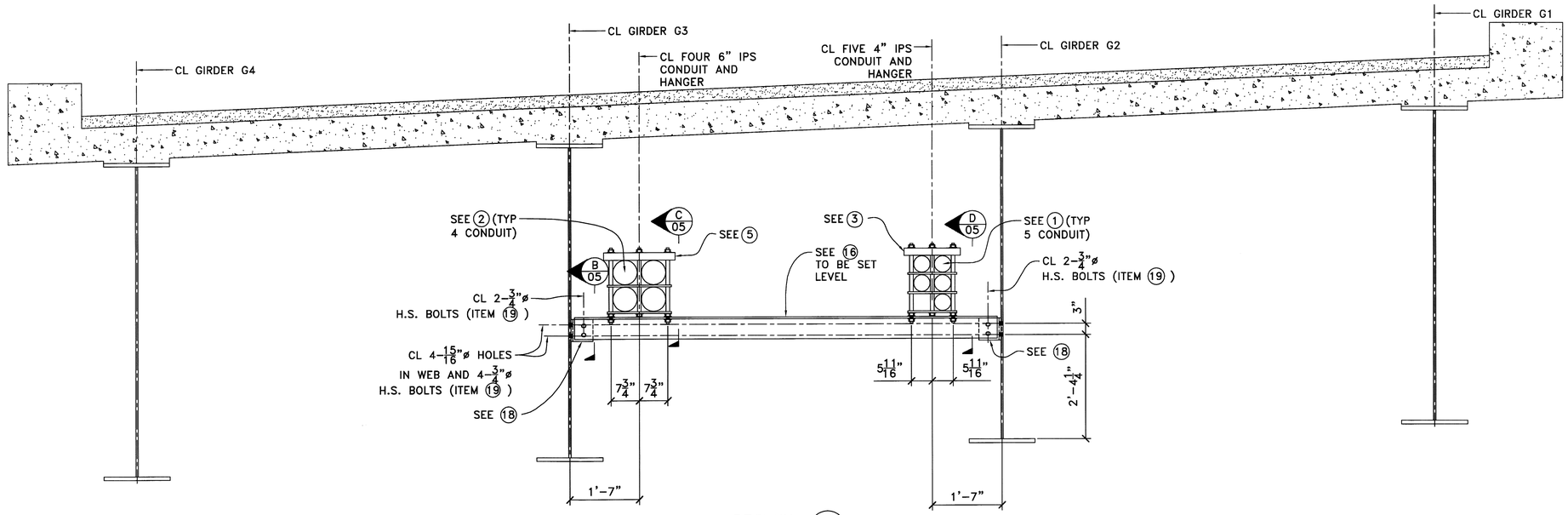

SECTION B/07
3/4"=1'-0

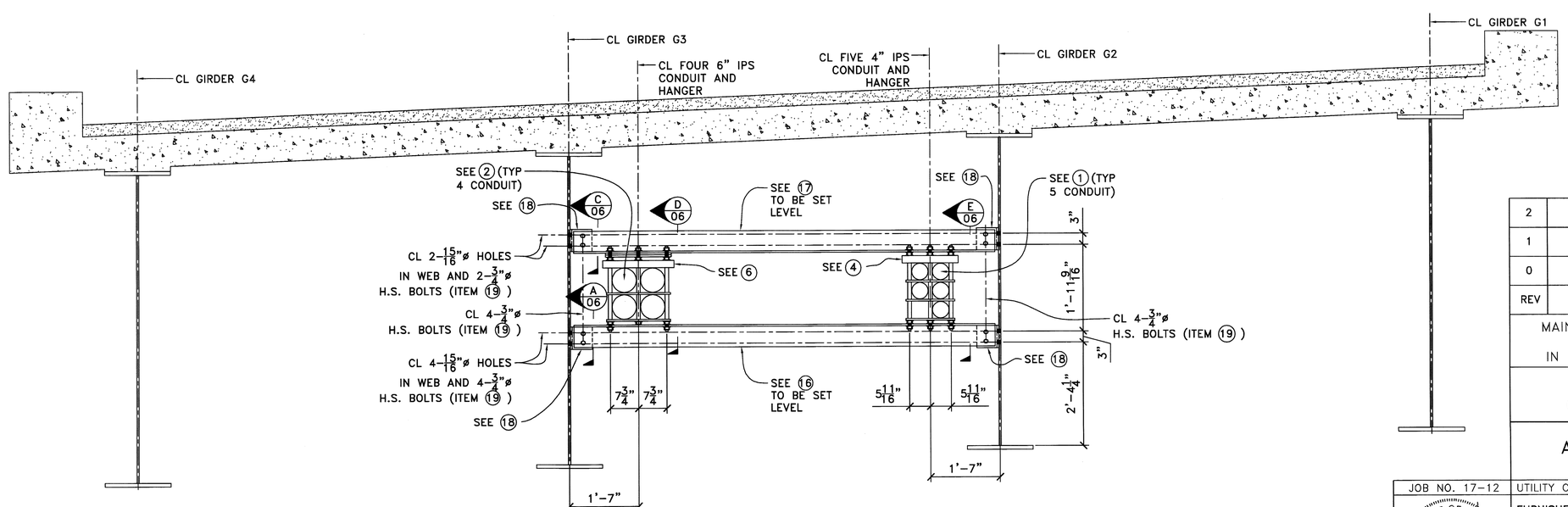

SECTION C/07
3/4"=1'-0

REV	COMMENTS	BY	DATE
2	APPROVAL	AE	03/04/13
1	APPROVAL	AE	01/24/13
0	APPROVAL	AE	11/27/12

MAINE KENNEBEC BRIDGE OVER THE KENNEBEC RIVER IN RICHMOND–DRESDEN MAINE

DETAILS 4
CONDUIT SUPPORTS

ANDREW J. ELD, P.E.

JOB NO. 17-12

UTILITY CONDUIT SUPPORTS

STATE OF MAINE ANDREW J. ELD #10262 LICENSED PROFESSIONAL ENGINEER
PE NO. 10262

FURNISHED BY: AMERICAN U-TEL
9760 SMITH ROAD
WILLOUHGBY, OHIO 44094
(440)946-6027 FAX:(440)946-7285

CHECKED BY: AE DATE: 11-23-12
DRAWN BY: WS DATE: 11-06-12
DRAWING NO: 17-12-08 SH. 9 OF 24

3/22/2013 BLU-PRINTS UNLIMITED INC 20 Howard St New London CT 860.444.6364 plots@bpunlpro.com

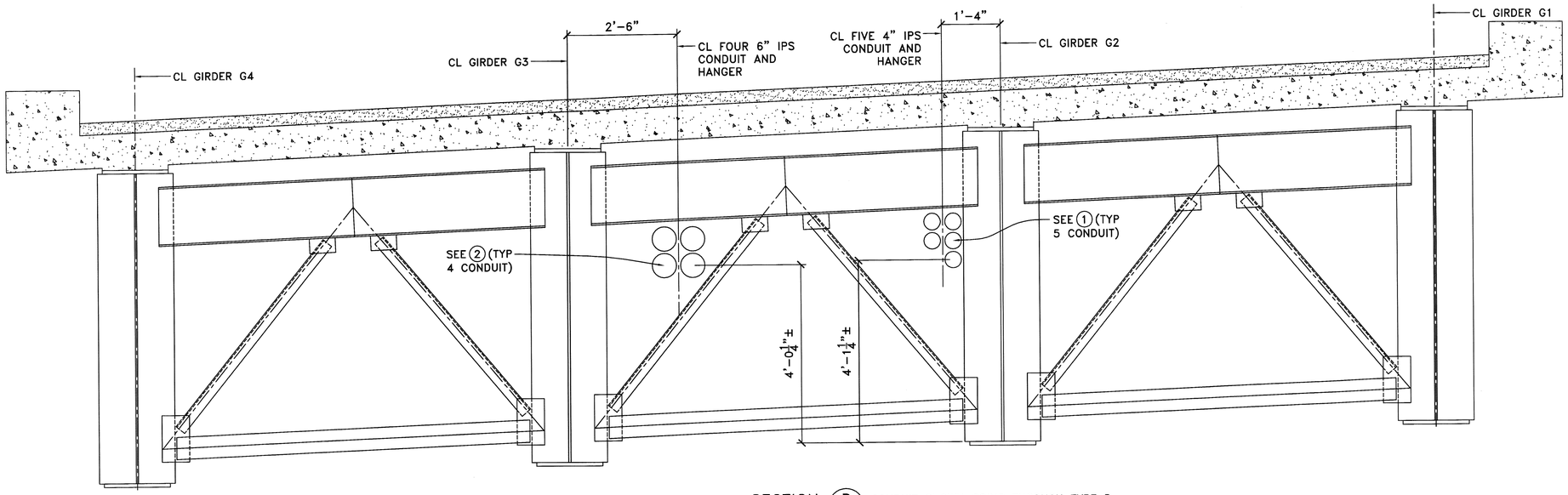

SECTION D/07 CONDUIT SHOWN GOING THROUGH TYPE D DIAPHRAGM ON SPAN 2, PIER 1
3/4"=1'-0

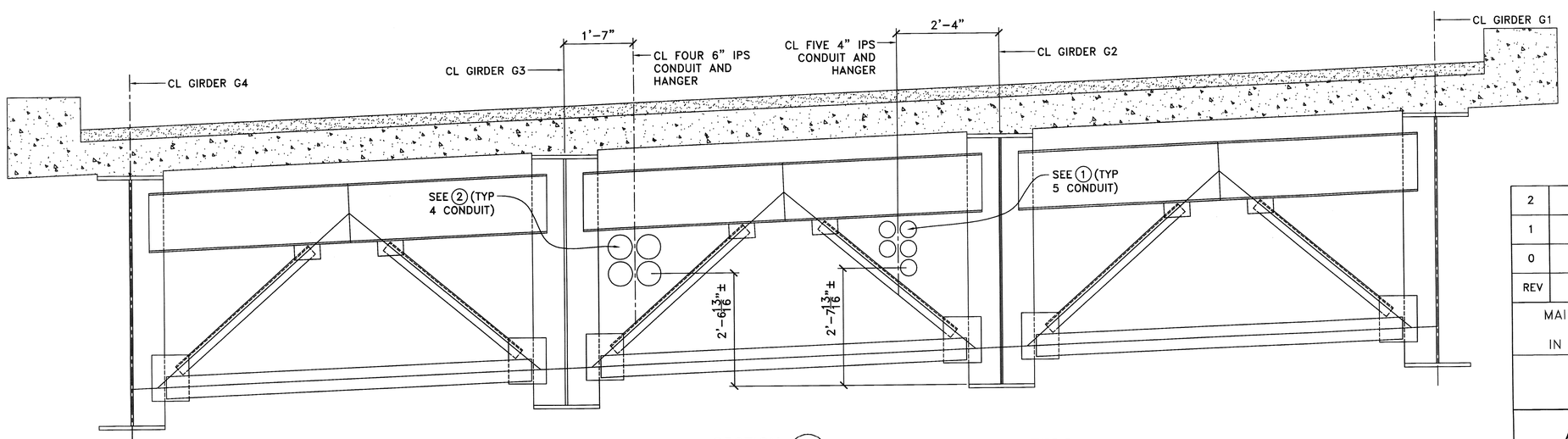

SECTION E/07 CONDUIT SHOWN GOING THROUGH TYPE D DIAPHRAGM ON SPAN 1, PIER 1
3/4"=1'-0

REV	COMMENTS	BY	DATE
2	APPROVAL	AE	03/04/13
1	APPROVAL	AE	01/24/13
0	APPROVAL	AE	11/27/12

MAINE KENNEBEC BRIDGE OVER THE KENNEBEC RIVER IN RICHMOND-DRESDEN MAINE

DETAILS 5
CONDUIT SUPPORTS

ANDREW J. ELD, P.E.

JOB NO. 17-12

STATE OF MAINE ANDREW J. ELD 10262 LICENSED PROFESSIONAL ENGINEER
PE NO. 10262

UTILITY CONDUIT SUPPORTS

FURNISHED BY: AMERICAN U-TEL
9760 SMITH ROAD
WILLOUHGBY, OHIO 44094
(440)946-6027 FAX:(440)946-7285

CHECKED BY: AE DATE: 11-23-12
DRAWN BY: WS DATE: 11-06-12
DRAWING NO: 17-12-09 SH. 10 OF 24

3/22/2013 BLU-PRINTS UNLIMITED INC. 20 Howard St New London CT 860.444.6964 plots@bpunlpro.com

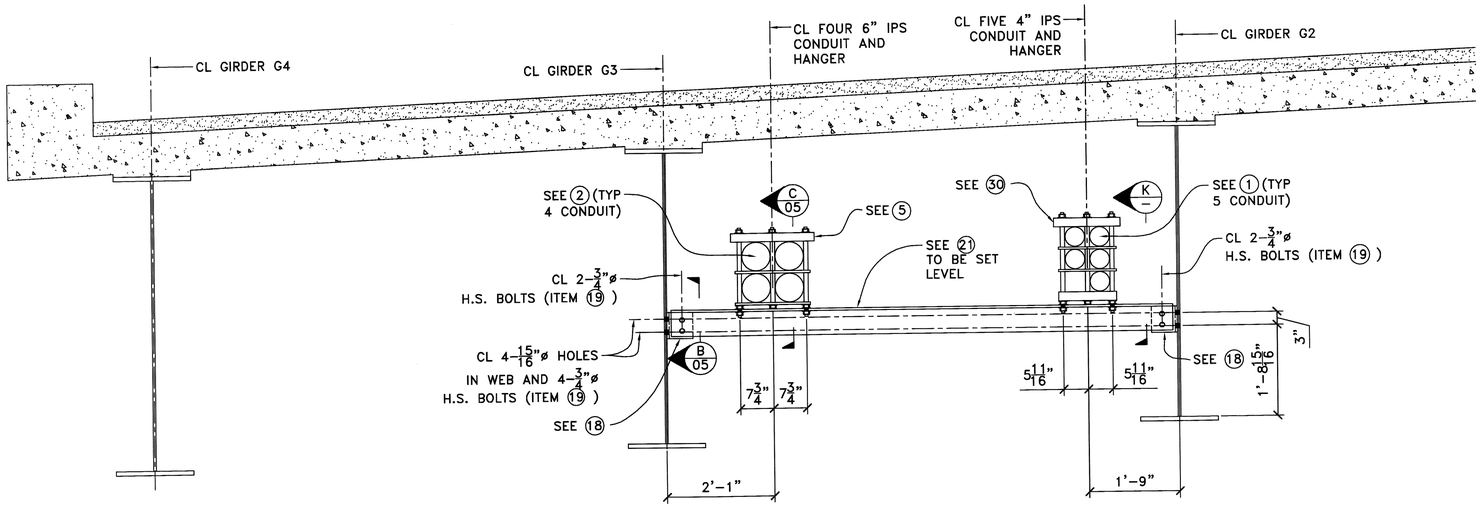

SECTION F 07
3/4"=1'-0

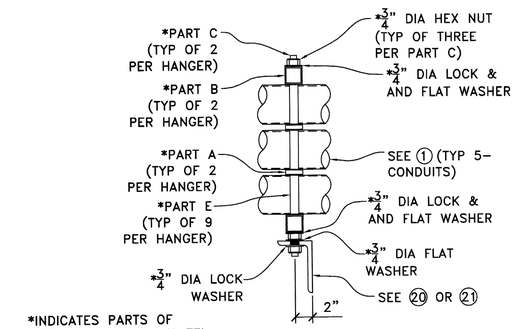

*INDICATES PARTS OF MODIFIED AMERICAN U-TEL HANGER PACKAGE FOR MATERIAL ITEM NO. 30

SECTION K – K 07
1 1/2"=1'-0

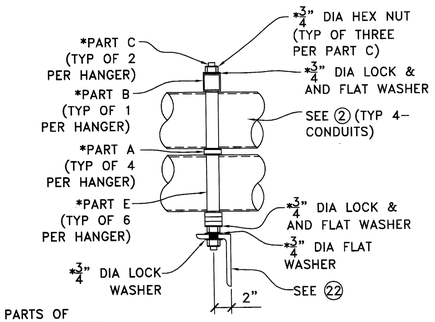

*INDICATES PARTS OF MODIFIED AMERICAN U-TEL HANGER PACKAGE FOR MATERIAL ITEM NO. 31

SECTION L –
1 1/2"=1'-0

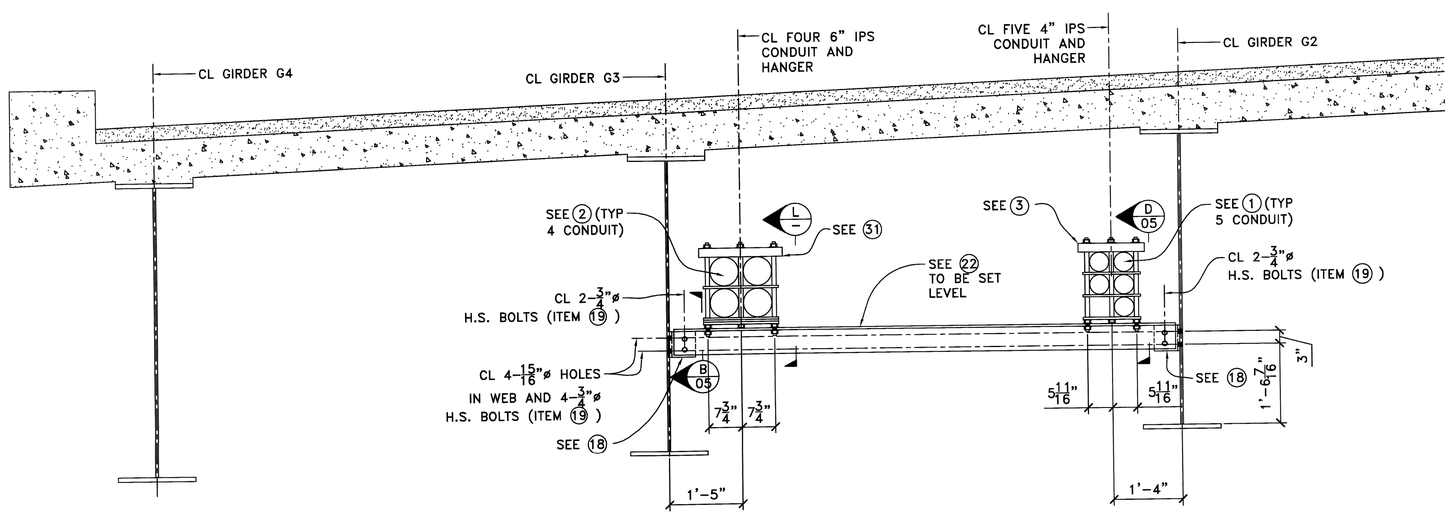

SECTION G 07 TYP OF 7 SUPPORTS SPAN 1
3/4"=1'-0

REV	COMMENTS	BY	DATE
2	APPROVAL	AE	03/04/13
1	APPROVAL	AE	01/24/13
0	APPROVAL	AE	11/27/12

MAINE KENNEBEC BRIDGE OVER THE KENNEBEC RIVER IN RICHMOND-DRESDEN MAINE

DETAILS 6
CONDUIT SUPPORTS

ANDREW J. ELD, P.E.

JOB NO. 17-12

UTILITY CONDUIT SUPPORTS

STATE OF MAINE ANDREW J. ELD 10262 LICENSED PROFESSIONAL ENGINEER

PE NO. 10262

FURNISHED BY: AMERICAN U-TEL
9760 SMITH ROAD
WILLOUHGBY, OHIO 44094
(440)946-6027 FAX:(440)946-7285

CHECKED BY: AE DATE: 11-23-12
DRAWN BY: WS DATE: 11-06-12
DRAWING NO: 17-12-10 SH. 11 OF 24

3/22/2013 BLU-PRINTS UNLIMITED INC 20 Howard St New London CT 860444 6584 plots@bluprints.com

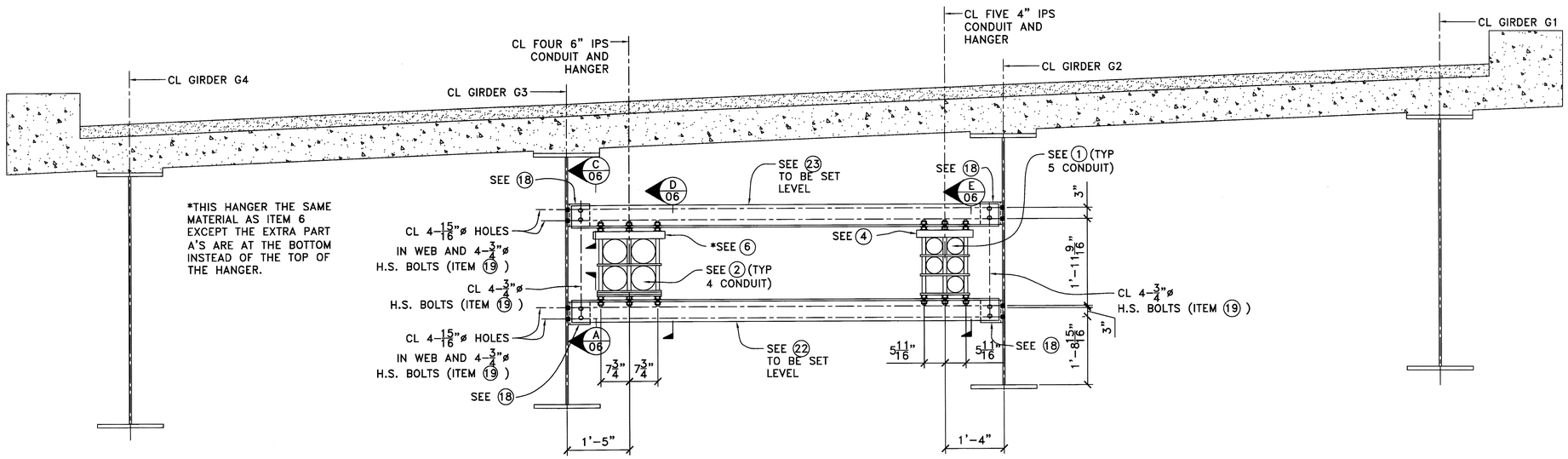

SECTION H/07
3/4"=1'-0

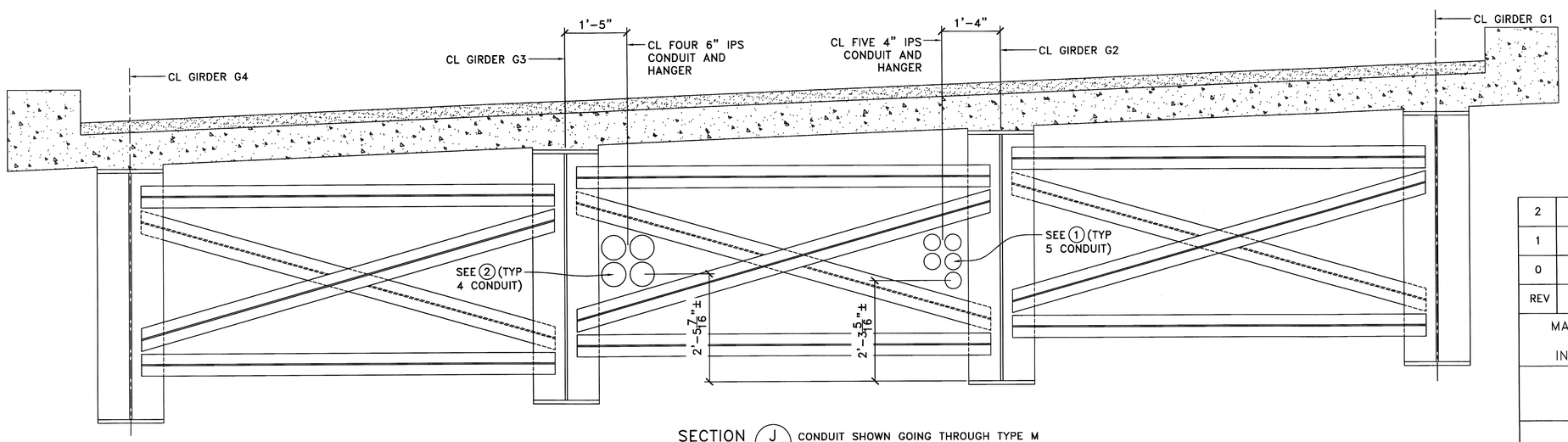

SECTION J/07
3/4"=1'-0

CONDUIT SHOWN GOING THROUGH TYPE M DIAPHRAGM ON SPAN 1.

REV	COMMENTS	BY	DATE
2	APPROVAL	AE	03/04/13
1	APPROVAL	AE	01/24/13
0	APPROVAL	AE	11/27/12

MAINE KENNEBEC BRIDGE OVER THE KENNEBEC RIVER IN RICHMOND-DRESDEN MAINE

DETAILS 7
CONDUIT SUPPORTS

ANDREW J. ELD, P.E.

JOB NO. 17-12

UTILITY CONDUIT SUPPORTS

STATE OF MAINE ANDREW J. ELD 10262 LICENSED PROFESSIONAL ENGINEER

PE NO. 10262

FURNISHED BY: AMERICAN U-TEL
9760 SMITH ROAD
WILLOUHGBY, OHIO 44094
(440)946-6027 FAX:(440)946-7285

CHECKED BY: AE DATE: 11-23-12
DRAWN BY: WS DATE: 11-06-12
DRAWING NO: 17-12-11 SH. 12 OF 24

3/22/2013 BLU-PRINTS UNLIMITED INC 20 Howard St New London CT 860.444.6564 plots@bpunpro.com

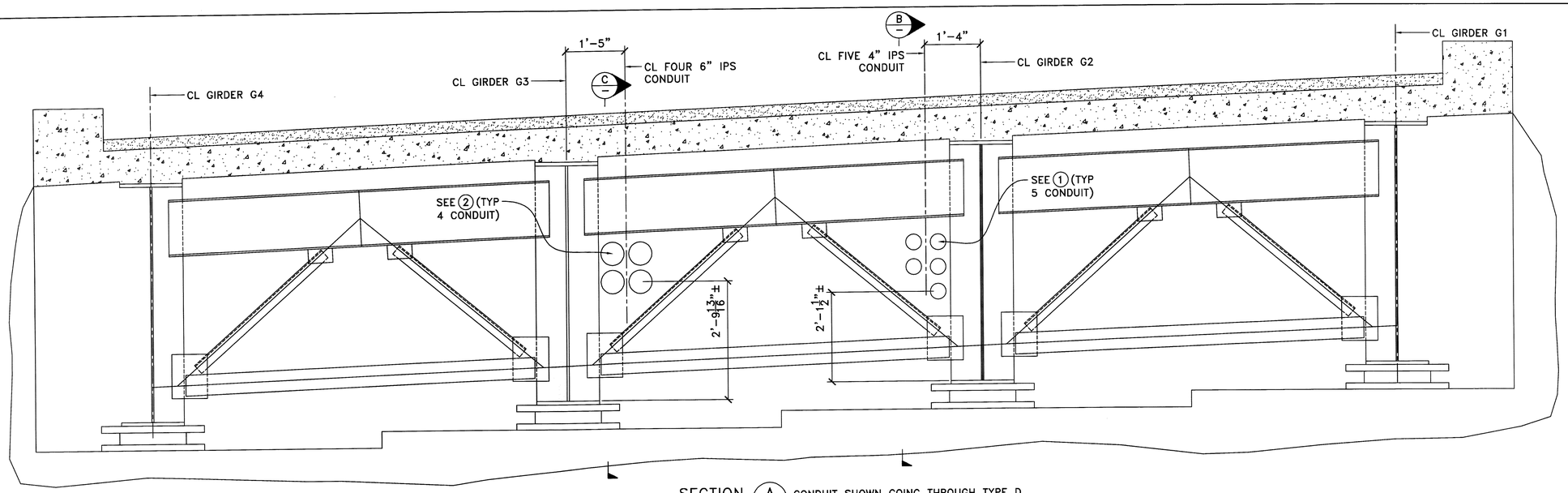

SECTION A/07 CONDUIT SHOWN GOING THROUGH TYPE D DIAPHRAGM ON ABUTMENT NO. 1
3/4"=1'-0

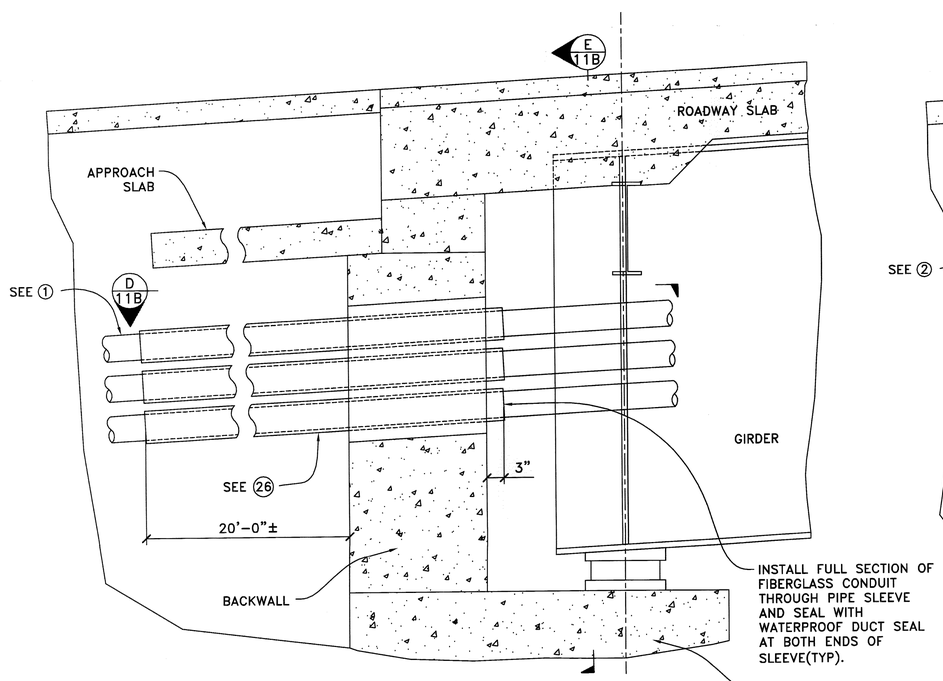

SECTION B/— ABUTMENT NO. 1 SHOWN, ABUTMENT NO. 2 SIMILAR
1"=1'-0

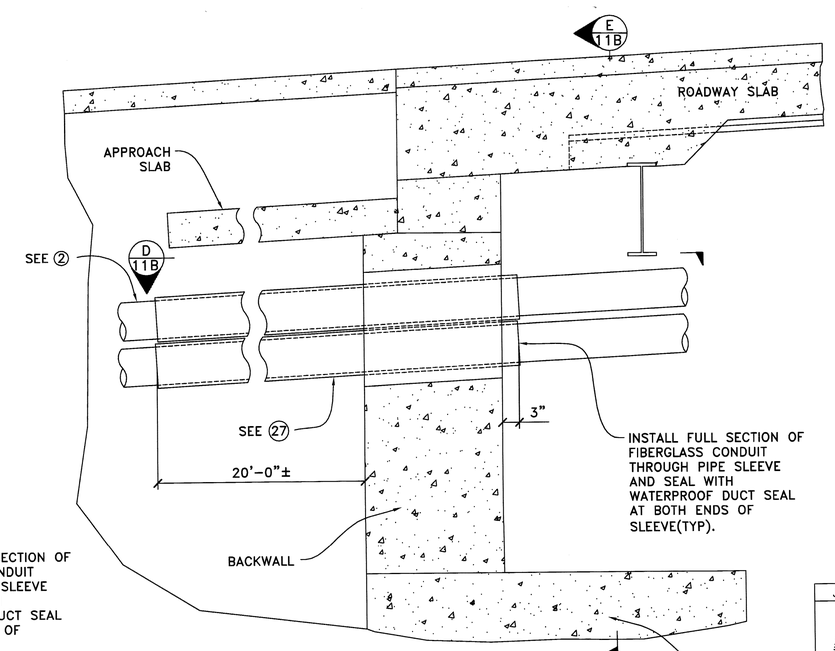

SECTION C/— ABUTMENT NO. 1 SHOWN, ABUTMENT NO. 2 SIMILAR
1"=1'-0

REV	COMMENTS	BY	DATE
1	APPROVAL	AE	03/04/13
0	APPROVAL	AE	01/24/13

MAINE KENNEBEC BRIDGE OVER THE KENNEBEC RIVER IN RICHMOND-DRESDEN MAINE

DETAILS 8
CONDUIT SUPPORTS

ANDREW J. ELD, P.E.

STATE OF MAINE ANDREW J. ELD 10262 LICENSED PROFESSIONAL ENGINEER

PE NO. 10262

JOB NO. 17-12

UTILITY CONDUIT SUPPORTS

FURNISHED BY: AMERICAN U-TEL
9760 SMITH ROAD
WILLOUHGBY, OHIO 44094
(440)946-6027 FAX:(440)946-7285

CHECKED BY: AE DATE: 11-23-12
DRAWN BY: WS DATE: 11-06-12
DRAWING NO: 17-12-11A SH. 13 OF 24

3/22/2013 BLU-PRINTS UNLIMITED INC 20 Howard St New London CT 860.444.6564 print@blueprints.com

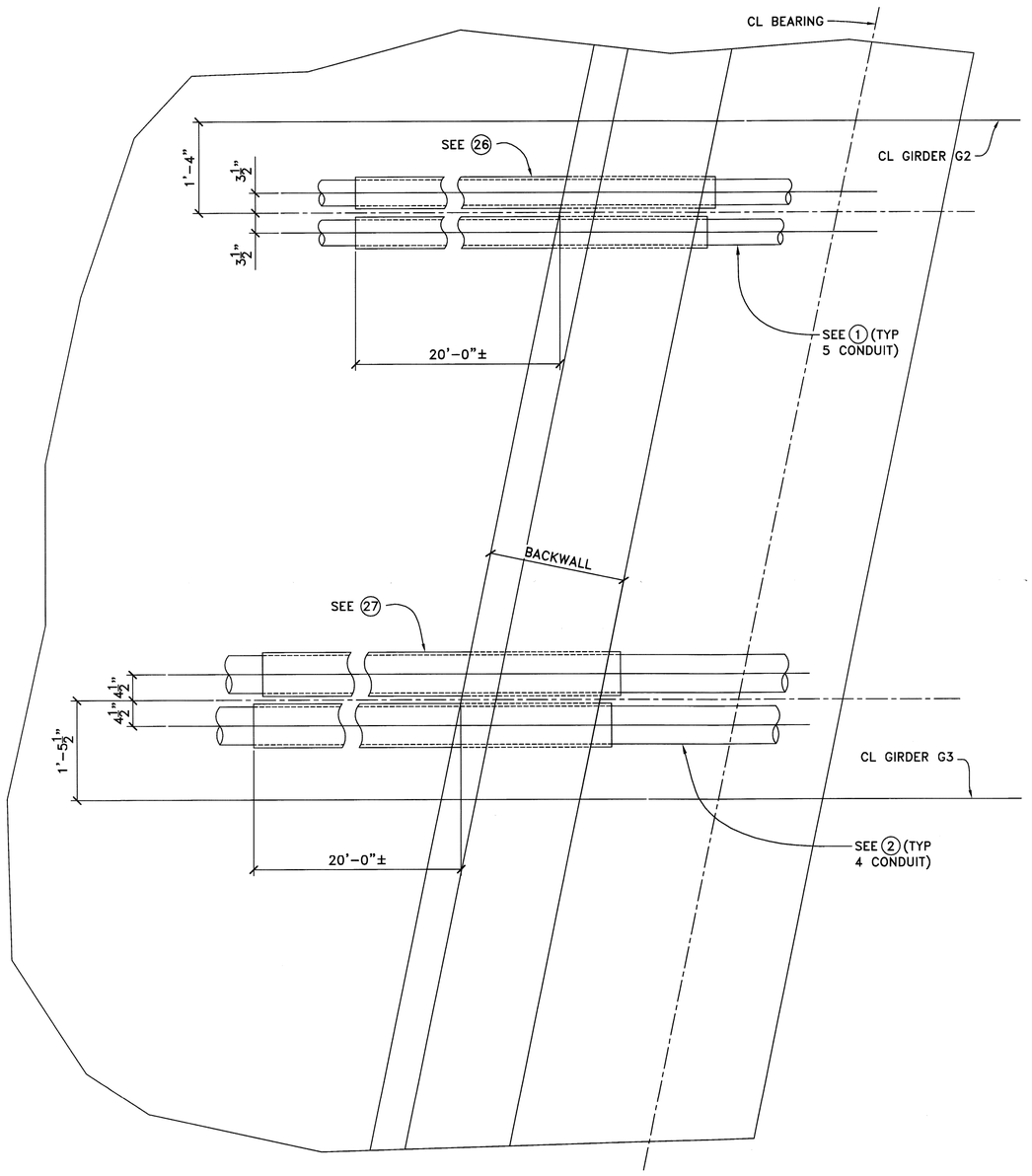

SECTION D 11A
1"=1'-0
ABUTMENT NO. 1 SHOWN, ABUTMENT NO. 2 SIMILAR

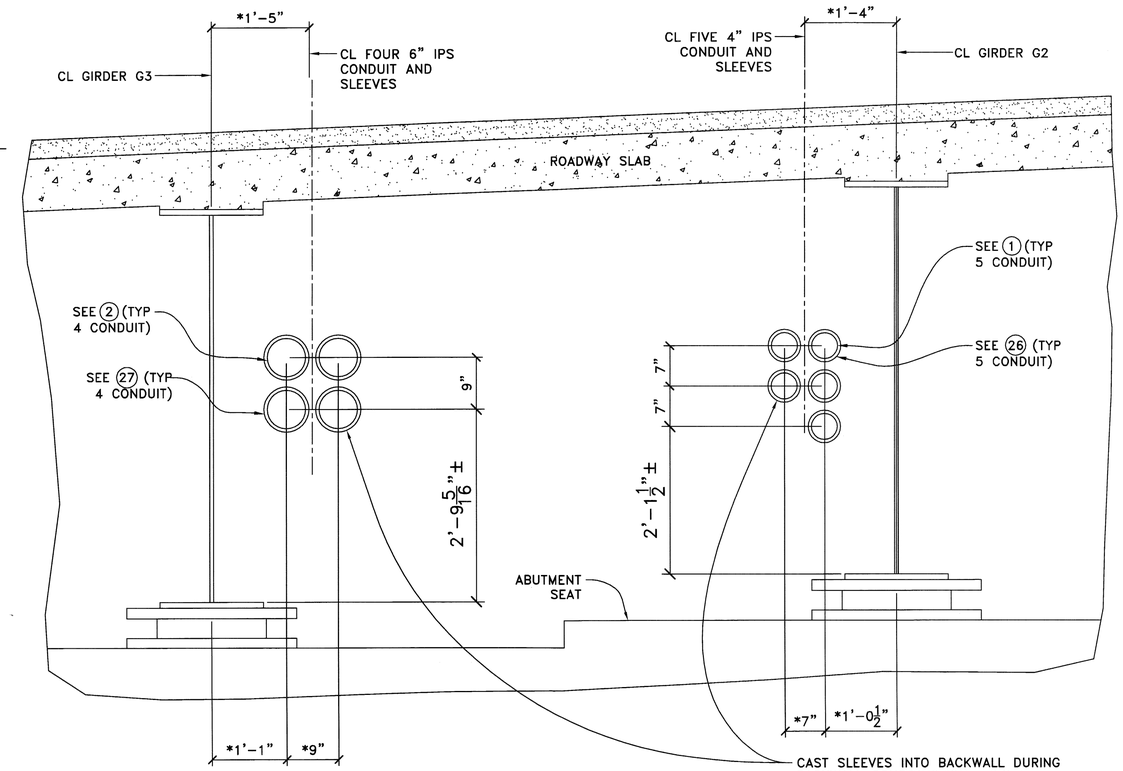

*DIMENSIONS TO CENTERLINE OF CONDUITS ARE MEASURED PERPENDICULAR TO THE CENTERLINE OF THE BEAMS, TYP BOTH ENDS OF BRIDGE

SECTION E 11A
1"=1'-0
ABUTMENT NO. 1 SHOWN, ABUTMENT NO. 2 SIMILAR

CAST SLEEVES INTO BACKWALL DURING BACKWALL CONSTRUCTION. INSTALL SLEEVES PARALLEL TO STRINGERS AND AT SAME LONGITUDINAL SLOPE AS STRINGERS. ALTERNATE: PROVIDE UTILITY BLOCKOUT [DESIGN BY OTHERS]

REV	COMMENTS	BY	DATE
2	MODIFY SLEEVES	AE	03/21/13
1	APPROVAL	AE	03/04/13
0	APPROVAL	AE	01/24/13

MAINE KENNEBEC BRIDGE OVER THE KENNEBEC RIVER IN RICHMOND–DRESDEN MAINE

DETAILS 9
CONDUIT SUPPORTS

ANDREW J. ELD, P.E.

JOB NO. 17–12

UTILITY CONDUIT SUPPORTS

STATE OF MAINE ANDREW J. ELD 10262 LICENSED PROFESSIONAL ENGINEER
PE NO. 10262

FURNISHED BY: AMERICAN U–TEL
9760 SMITH ROAD
WILLOUHGBY, OHIO 44094
(440)946–6027 FAX:(440)946–7285

CHECKED BY: AE DATE: 11–23–12
DRAWN BY: WS DATE: 11–06–12
DRAWING NO: 17–12–11B SH. 14 OF 24

3/22/2013 BLU-PRINTS UNLIMITED INC. 20 Howard St New London CT 860.444.6564 plots@bpuncpm.com

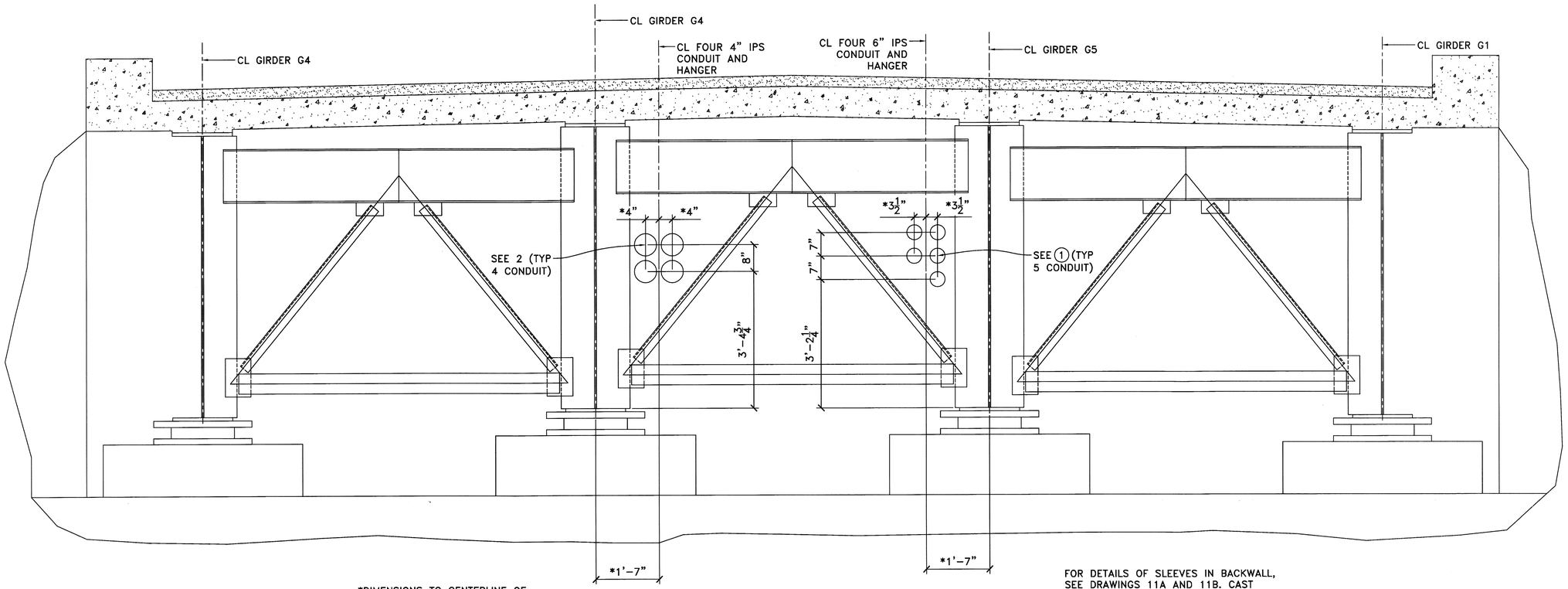

*DIMENSIONS TO CENTERLINE OF CONDUITS ARE MEASURED PERPENDICULAR TO THE CENTERLINE OF THE BEAMS, TYP BOTH ENDS OF BRIDGE

SECTION E/04
3/4"=1'-0

CONDUIT SHOWN GOING THROUGH TYPE D DIAPHRAGM ON ABUTMENT NO. 2

FOR DETAILS OF SLEEVES IN BACKWALL, SEE DRAWINGS 11A AND 11B. CAST SLEEVES INTO BACKWALL DURING BACKWALL CONSTRUCTION. INSTALL SLEEVES PARALLEL TO STRINGERS AND AT SAME LONGITUDINAL SLOPE AS STRINGERS. ALTERNATE: PROVIDE UTILITY BLOCKOUT [DESIGN BY OTHERS]

REV	COMMENTS	BY	DATE
1	APPROVAL	AE	03/04/13
0	APPROVAL	AE	01/24/13

MAINE KENNEBEC BRIDGE OVER THE KENNEBEC RIVER IN RICHMOND-DRESDEN MAINE

DETAILS 10
CONDUIT SUPPORTS

ANDREW J. ELD, P.E.

JOB NO. 17-12

UTILITY CONDUIT SUPPORTS

STATE OF MAINE ANDREW J. ELD 10262 LICENSED PROFESSIONAL ENGINEER

PE NO. 10262

FURNISHED BY: AMERICAN U-TEL
9760 SMITH ROAD
WILLOUHGBY, OHIO 44094
(440)946-6027 FAX:(440)946-7285

CHECKED BY: AE DATE: 11-23-12
DRAWN BY: WS DATE: 11-06-12
DRAWING NO: 17-12-11C SH. 15 OF 24

3/22/2013 BLU-PRINTS UNLIMITED INC 20 Howard St New London CT 860.444.5564 plots@bpunlpro.com

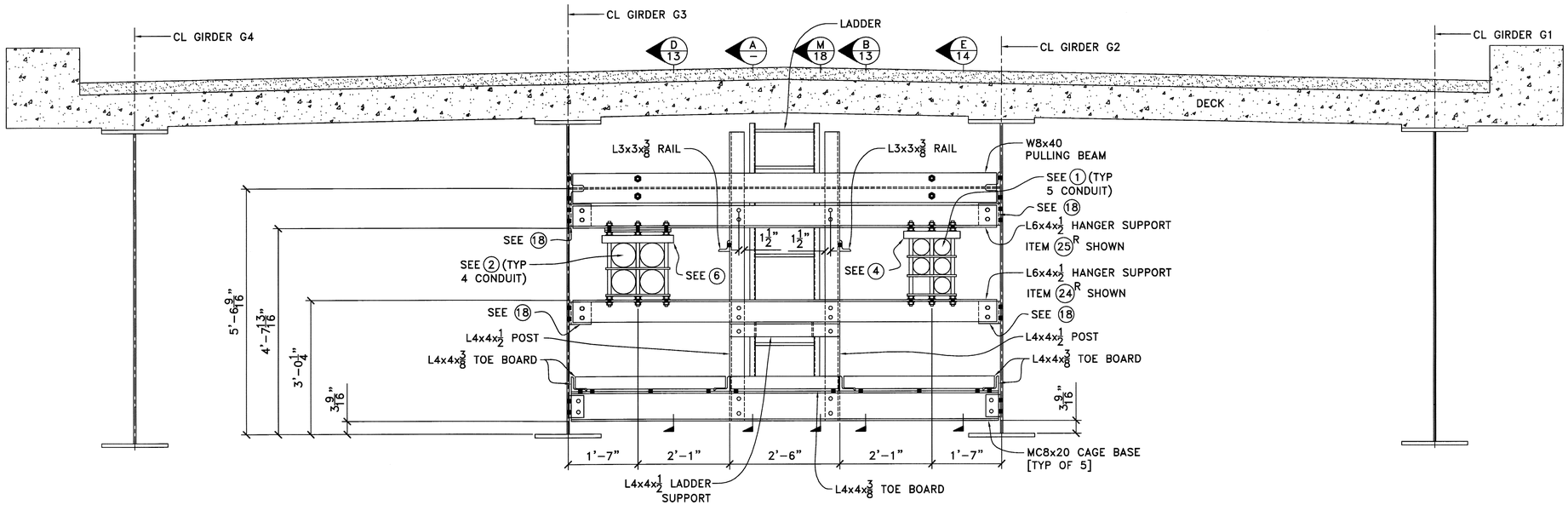

SECTION C 02 END VIEW AT EAST END OF MANHOLE CAGE [LOOKING WEST]
3/4"=1'-0

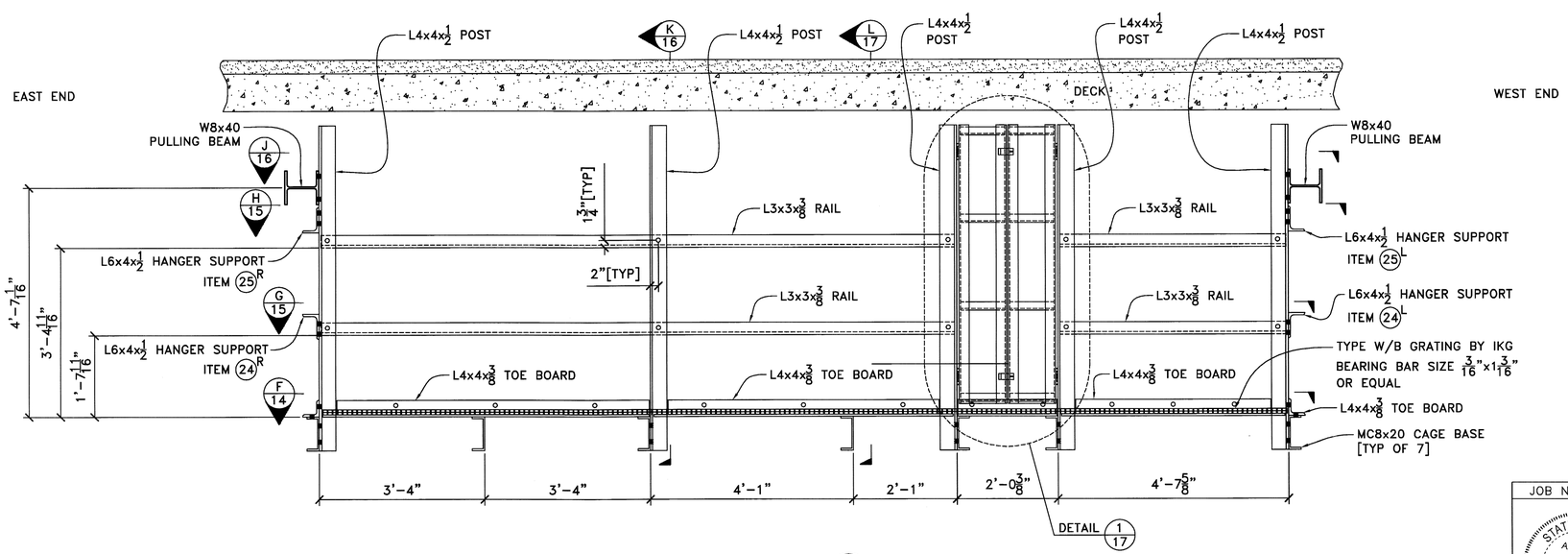

SECTION A – LOOKING SOUTH AT WALL BETWEEN POWER CONDUIT SIDE OF CAGE AND WALKWAY DOWN THE CENTER OF CAGE
3/4"=1'-0

REV	COMMENTS	BY	DATE
2	APPROVAL	AE	03/04/13
1	APPROVAL	AE	01/24/13
0	APPROVAL	AE	11/27/12

MAINE KENNEBEC BRIDGE OVER
THE KENNEBEC RIVER
IN RICHMOND–DRESDEN MAINE

MANHOLE CAGE
DETAILS 1

ANDREW J. ELD, P.E.

JOB NO. 17–12 | UTILITY CONDUIT SUPPORTS

STATE OF MAINE ANDREW J. ELD 10262 LICENSED PROFESSIONAL ENGINEER PE No. 10262

FURNISHED BY: AMERICAN U–TEL
9760 SMITH ROAD
WILLOUHGBY, OHIO 44094
(440)946–6027 FAX:(440)946–7285

CHECKED BY: AE DATE: 11–23–12
DRAWN BY: WS DATE: 11–06–12
DRAWING NO: 17–12–12 SH. 16 OF 24

3/22/2013 BLU-PRINTS UNLIMITED INC 20 Howard St New London CT 860.444.6564 pcs3@bpuwpo.com

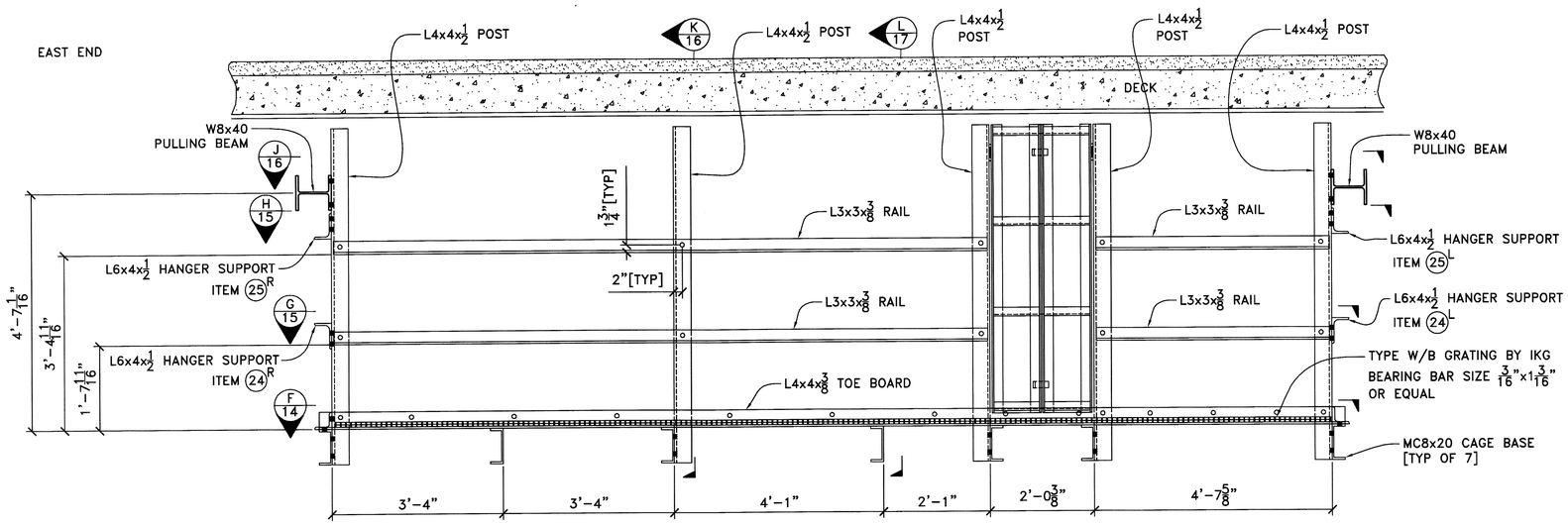

SECTION B/12 LOOKING SOUTH AT WALL BETWEEN TELEPHONE CONDUIT SIDE OF CAGE AND WALKWAY DOWN THE CENTER OF CAGE

3/4"=1'-0

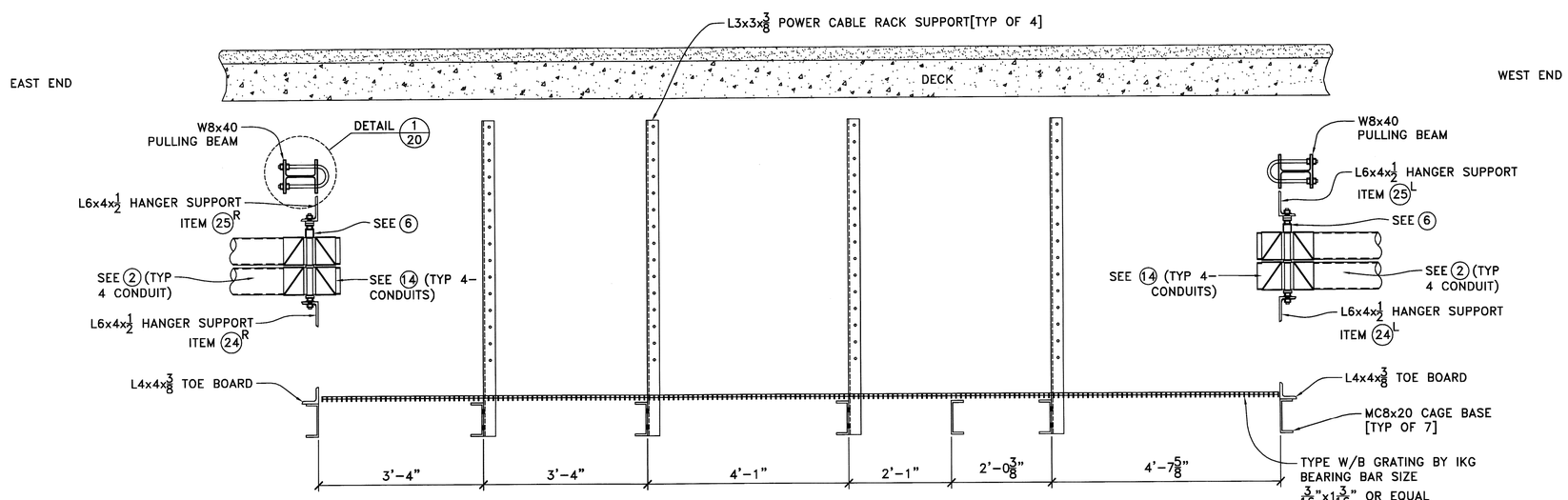

SECTION D/12 LOOKING SOUTH AT POWER CONDUIT INSIDE OF CAGE

3/4"=1'-0

REV	COMMENTS	BY	DATE
2	APPROVAL	AE	03/04/13
1	APPROVAL	AE	01/24/13
0	APPROVAL	AE	11/27/12

MAINE KENNEBEC BRIDGE OVER
THE KENNEBEC RIVER
IN RICHMOND–DRESDEN MAINE

MANHOLE CAGE
DETAILS 2

ANDREW J. ELD, P.E.

JOB NO. 17–12

UTILITY CONDUIT SUPPORTS

STATE OF MAINE ANDREW J. ELD 10262 LICENSED PROFESSIONAL ENGINEER

PE NO. 10262

FURNISHED BY: AMERICAN U–TEL
9760 SMITH ROAD
WILLOUHGBY, OHIO 44094
(440)946–6027 FAX:(440)946–7285

CHECKED BY: AE DATE: 11–23–12
DRAWN BY: WS DATE: 11–06–12
DRAWING NO: 17–12–13 SH. 17 OF 24

3/22/2013 BLU-PRINTS UNLIMITED INC. 20 Howard St New London CT 860.444.6564 pots@bpuspro.com

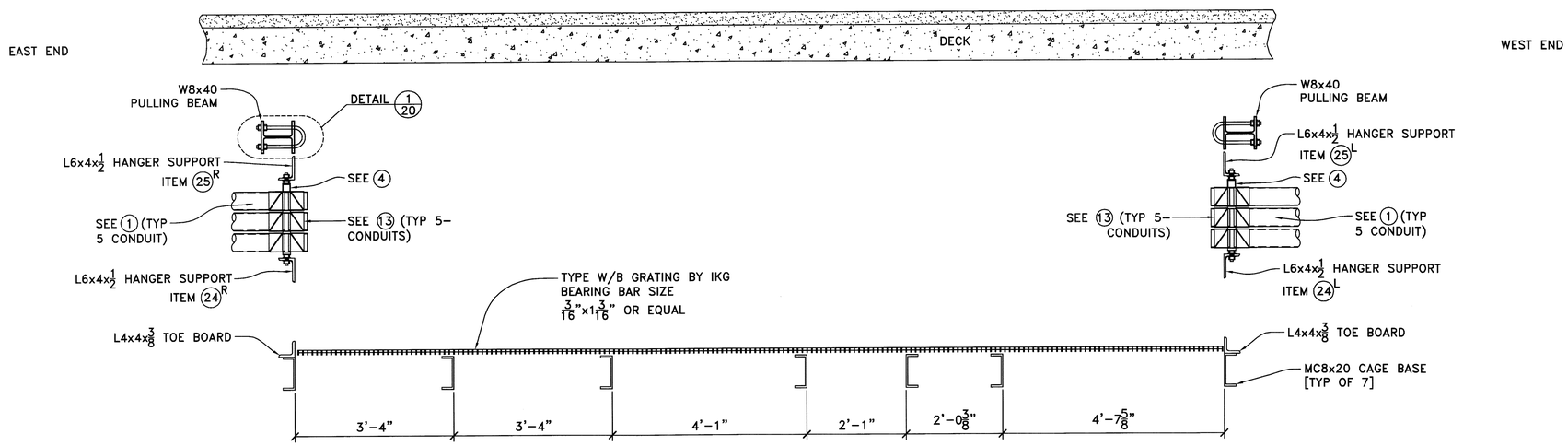

SECTION E/12 LOOKING SOUTH AT TELEPHONE CONDUIT INSIDE OF CAGE
3/4"=1'-0

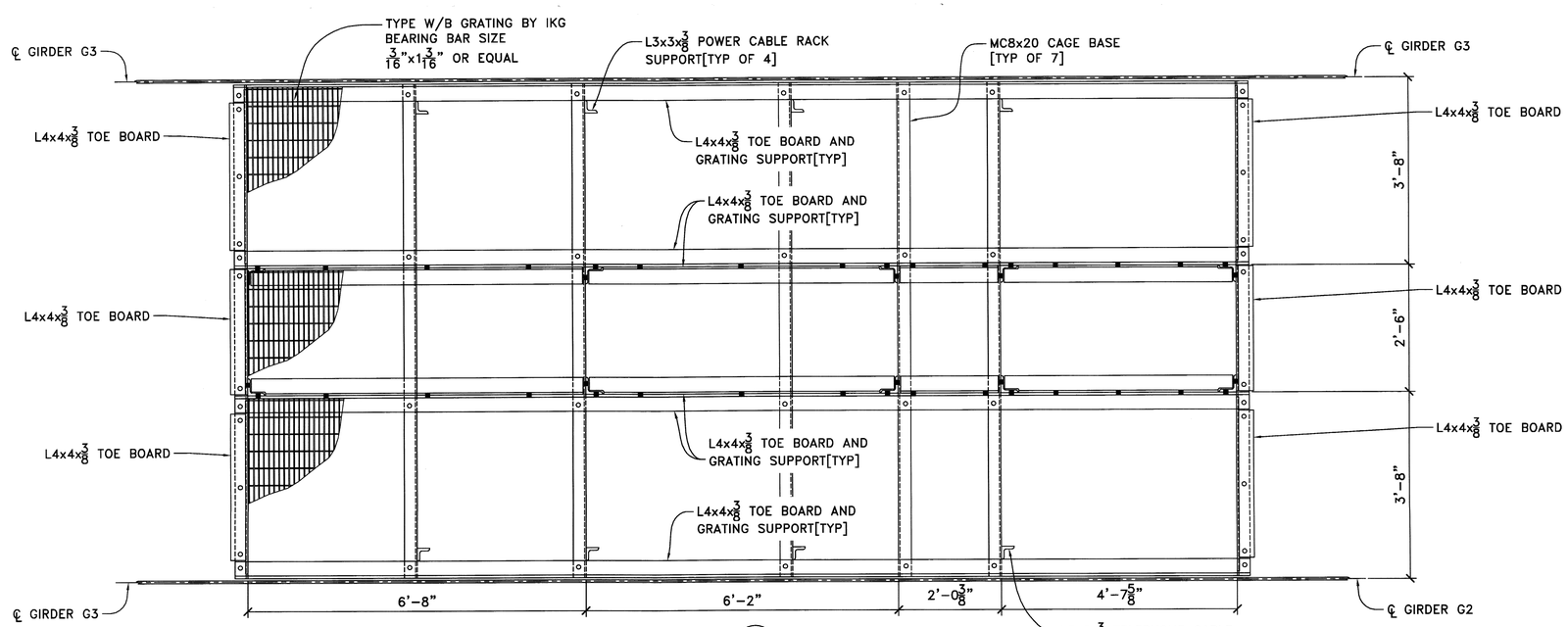

SECTION F/12 MANHOLE CAGE FLOOR
3/4"=1'-0

REV	COMMENTS	BY	DATE
2	APPROVAL	AE	03/04/13
1	APPROVAL	AE	01/24/13
0	APPROVAL	AE	11/27/12

MAINE KENNEBEC BRIDGE OVER THE KENNEBEC RIVER IN RICHMOND–DRESDEN MAINE

MANHOLE CAGE DETAILS 3

ANDREW J. ELD, P.E.

JOB NO. 17–12 | UTILITY CONDUIT SUPPORTS

STATE OF MAINE ANDREW J. ELD 10262 LICENSED PROFESSIONAL ENGINEER
PE NO. 10262

FURNISHED BY: AMERICAN U–TEL
9760 SMITH ROAD
WILLOUHGBY, OHIO 44094
(440)946–6027 FAX:(440)946–7285

CHECKED BY: AE DATE: 11–23–12
DRAWN BY: WS DATE: 11–06–12
DRAWING NO: 17–12–14 SH. 18 OF 24

3/22/2013 BLU-PRINTS UNLIMITED INC 29 Howard St New London CT 860 444 6564 plots@bluprints.com

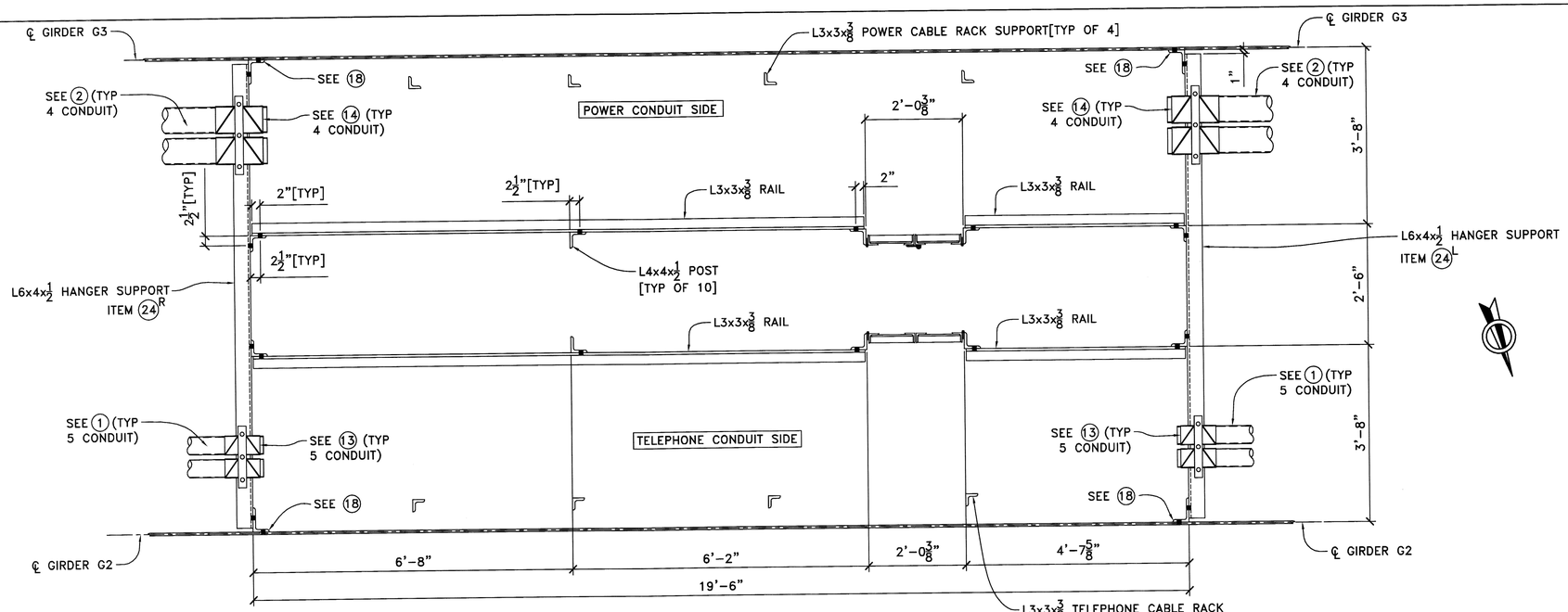

SECTION G/12
3/4"=1'-0

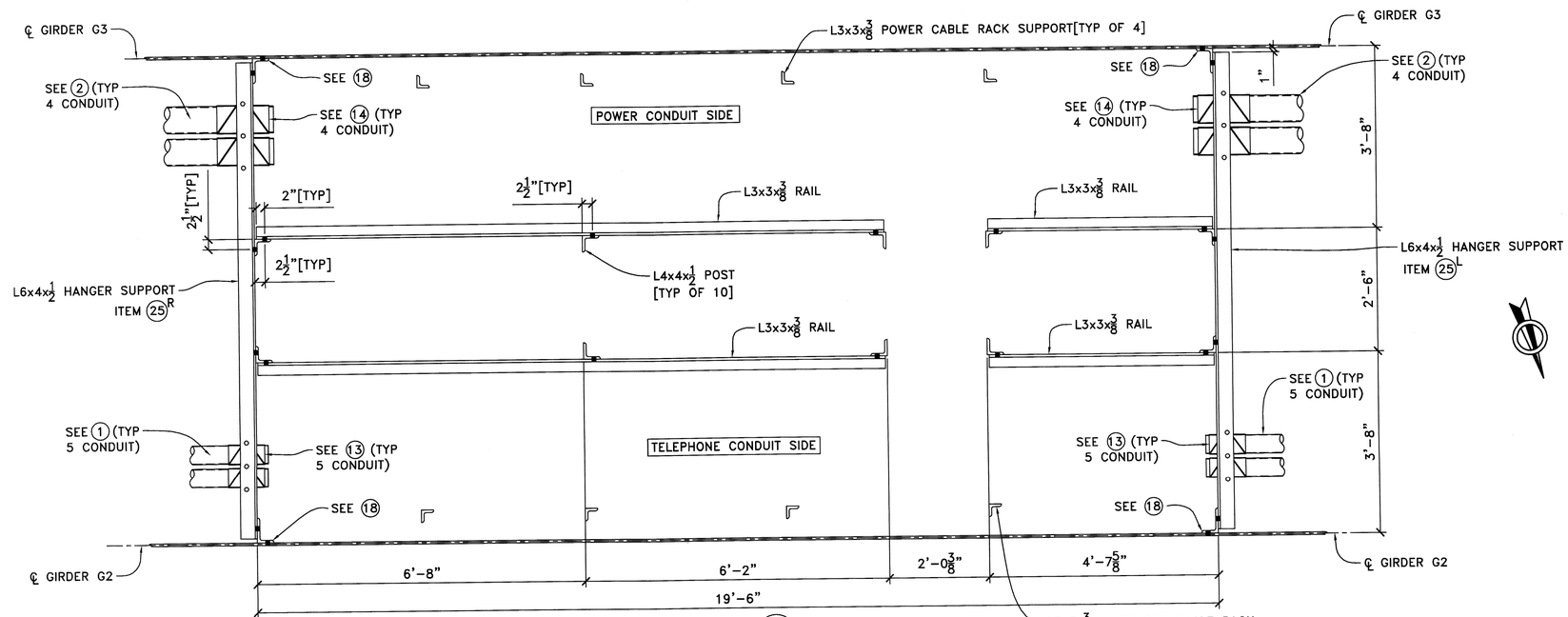

SECTION H/12
3/4"=1'-0

REV	COMMENTS	BY	DATE
2	APPROVAL	AE	03/04/13
1	APPROVAL	AE	01/24/13
0	APPROVAL	AE	11/27/12

MAINE KENNEBEC BRIDGE OVER THE KENNEBEC RIVER IN RICHMOND–DRESDEN MAINE

MANHOLE CAGE DETAILS 4

ANDREW J. ELD, P.E.

JOB NO. 17–12

UTILITY CONDUIT SUPPORTS

FURNISHED BY: AMERICAN U–TEL
9760 SMITH ROAD
WILLOUHGBY, OHIO 44094
(440)946–6027 FAX:(440)946–7285

STATE OF MAINE ANDREW ELD 10262 LICENSED PROFESSIONAL ENGINEER

PE NO. 10262

CHECKED BY: AE DATE: 11–23–12
DRAWN BY: WS DATE: 11–06–12
DRAWING NO: 17–12–15 SH. 19 OF 24

3/22/2013 BLU-PRINTS UNLIMITED INC. 20 Howard St New London CT 860.444.6564 prints@bluunlpro.com

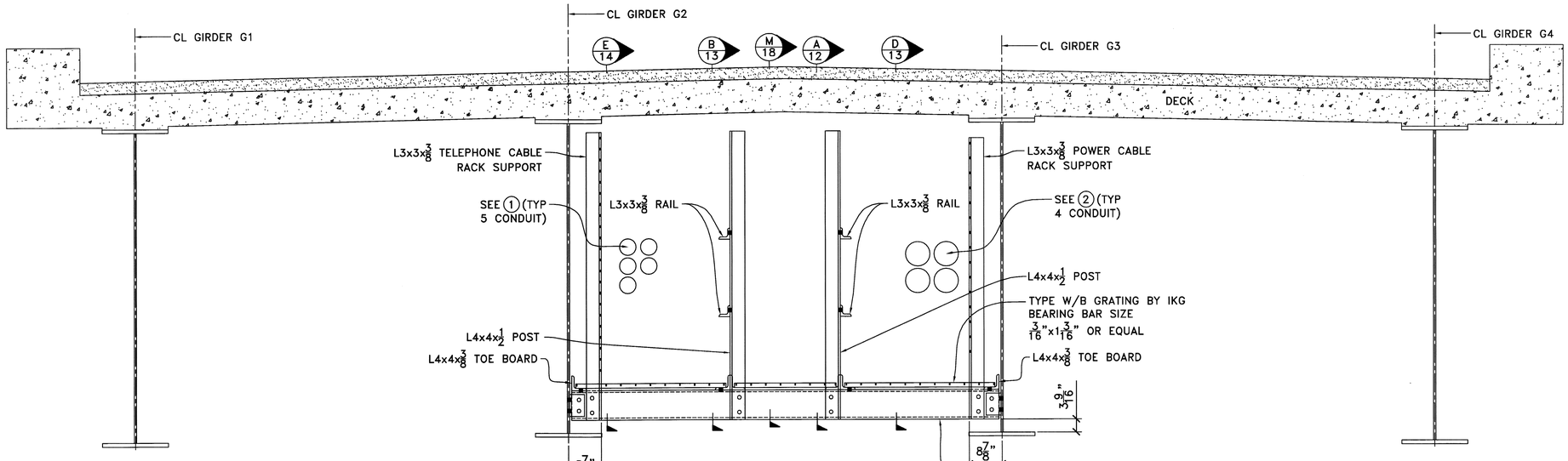

SECTION K 12 LOOKING EAST
3/4"=1'-0

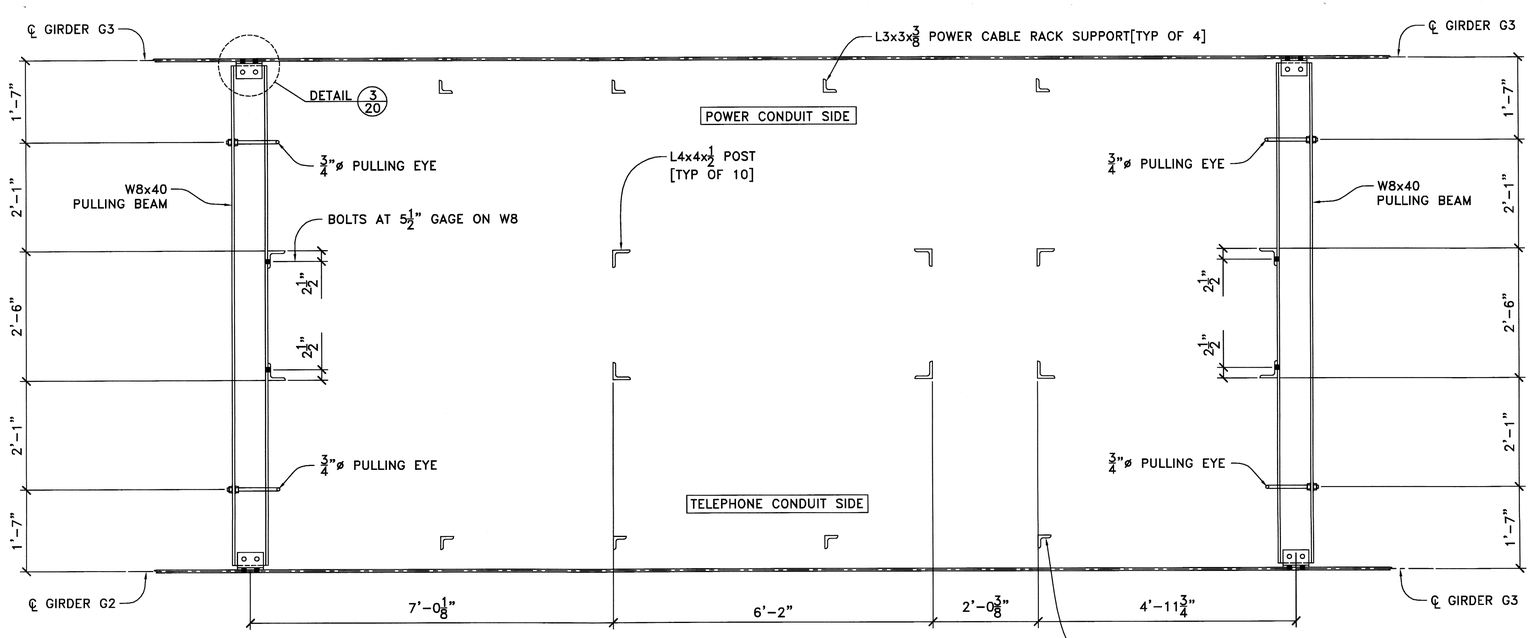

SECTION J 12
3/4"=1'-0

REV	COMMENTS	BY	DATE
2	APPROVAL	AE	03/04/13
1	APPROVAL	AE	01/24/13
0	APPROVAL	AE	11/27/12

MAINE KENNEBEC BRIDGE OVER THE KENNEBEC RIVER IN RICHMOND–DRESDEN MAINE

MANHOLE CAGE DETAILS 5

ANDREW J. ELD, P.E.

JOB NO. 17–12

UTILITY CONDUIT SUPPORTS

STATE OF MAINE ANDREW J. ELD 10262 LICENSED PROFESSIONAL ENGINEER

PE NO. 10262

FURNISHED BY: AMERICAN U–TEL
9760 SMITH ROAD
WILLOUHGBY, OHIO 44094
(440)946–6027 FAX:(440)946–7285

CHECKED BY: AE DATE: 11–23–12
DRAWN BY: WS DATE: 11–06–12
DRAWING NO: 17–12–16 SH. 20 OF 24

3/22/2013 BLU-PRINTS UNLIMITED INC 20 Howard St New London CT 860.444.5564 plots@bpunepro.com

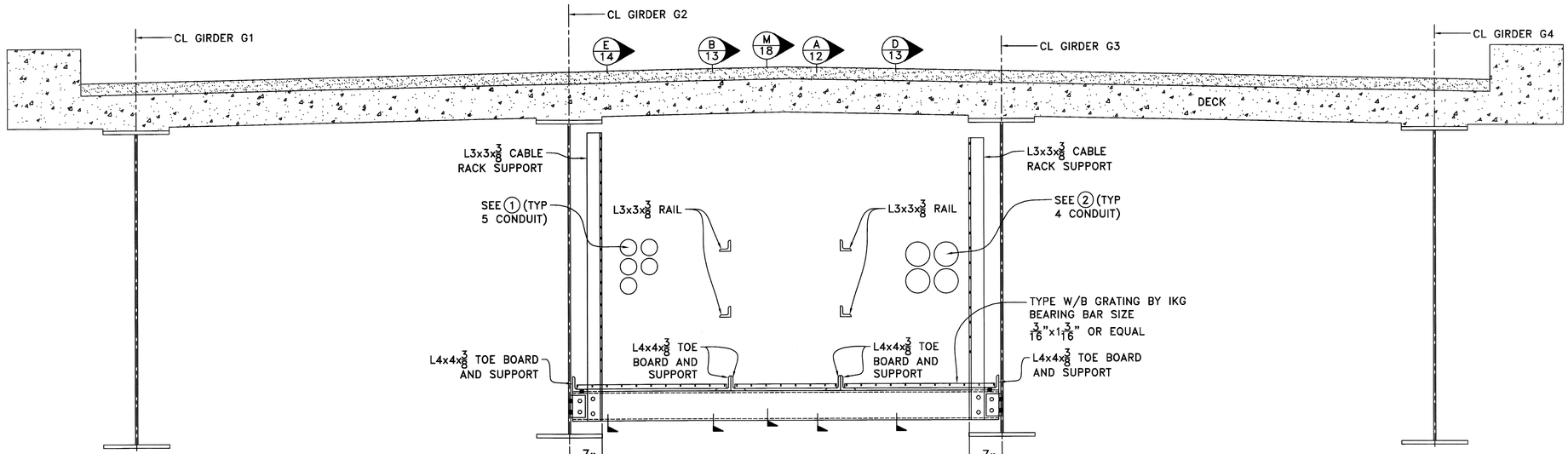

SECTION L/12 LOOKING EAST
3/4"=1'-0

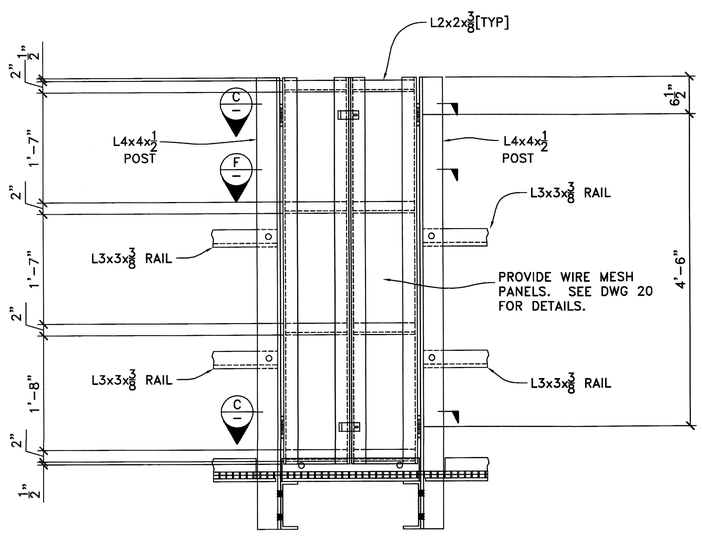

DETAIL 1/12 MANHOLE CAGE DOORS
1"=1'-0

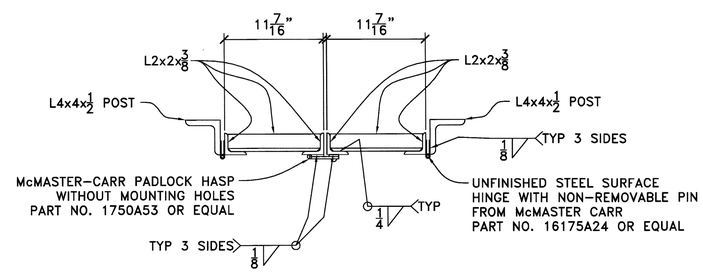

SECTION C
1 1/2"=1'-0

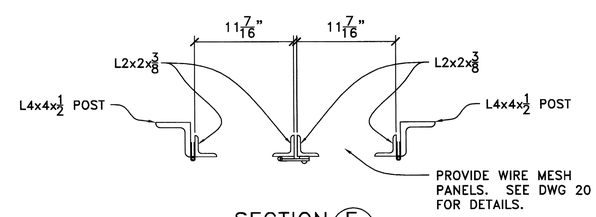

SECTION F
1 1/2"=1'-0

REV	COMMENTS	BY	DATE
2	APPROVAL	AE	03/04/13
1	APPROVAL	AE	01/24/13
0	APPROVAL	AE	11/27/12

MAINE KENNEBEC BRIDGE OVER THE KENNEBEC RIVER IN RICHMOND-DRESDEN MAINE

MANHOLE CAGE DETAILS 6

ANDREW J. ELD, P.E.

JOB NO. 17-12

UTILITY CONDUIT SUPPORTS

STATE OF MAINE ANDREW J. ELD 10262 LICENSED PROFESSIONAL ENGINEER

PE NO. 10262

FURNISHED BY: AMERICAN U-TEL
9760 SMITH ROAD
WILLOUHGBY, OHIO 44094
(440)946-6027 FAX:(440)946-7285

CHECKED BY: AE DATE: 11-23-12
DRAWN BY: WS DATE: 11-06-12
DRAWING NO: 17-12-17 SH. 21 OF 24

3/22/2013 BLU-PRINTS UNLIMITED INC 20 Howard St New London CT 860.444.6564 prints@bluprints.com

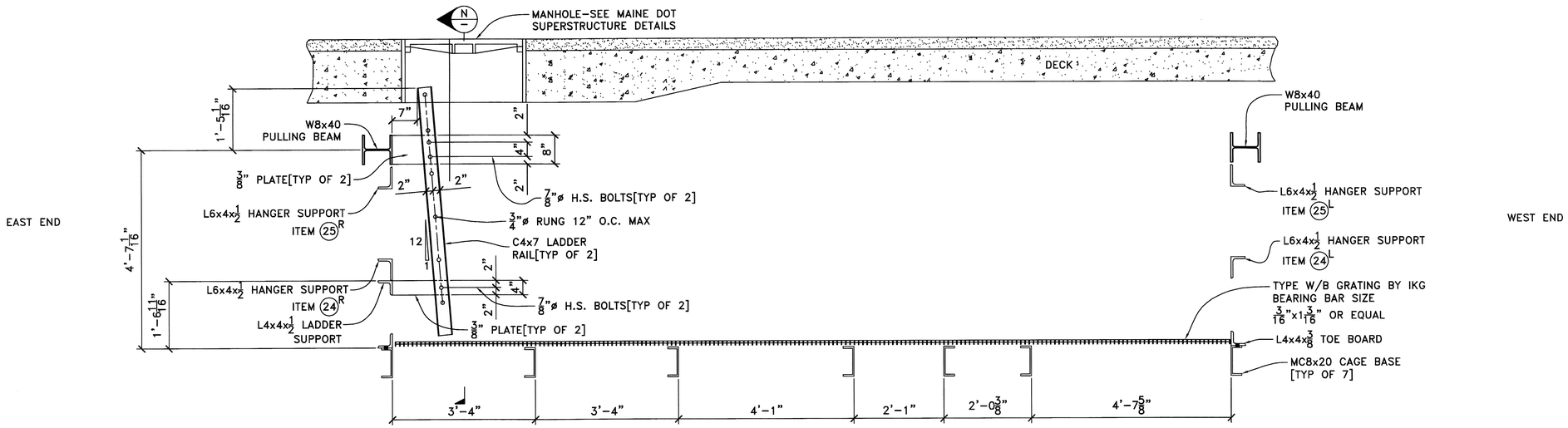

SECTION M/12 LOOKING SOUTH DOWN THE CENTER OF CAGE
3/4"=1'–0

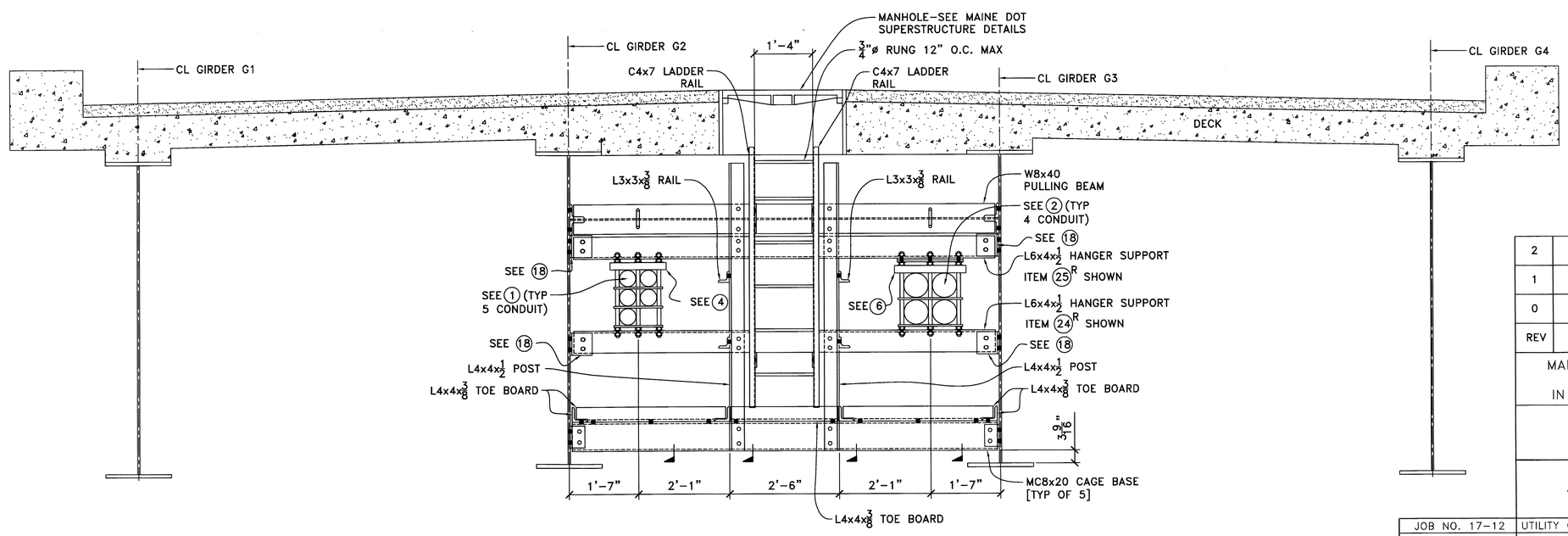

SECTION N/– LOOKING EAST
3/4"=1'–0

REV	COMMENTS	BY	DATE
2	APPROVAL	AE	03/04/13
1	APPROVAL	AE	01/24/13
0	APPROVAL	AE	11/27/12

MAINE KENNEBEC BRIDGE OVER THE KENNEBEC RIVER IN RICHMOND–DRESDEN MAINE

MANHOLE CAGE DETAILS 7

ANDREW J. ELD, P.E.

JOB NO. 17–12

UTILITY CONDUIT SUPPORTS

STATE OF MAINE ANDREW J. ELD 10262 LICENSED PROFESSIONAL ENGINEER
PE NO. 10262

FURNISHED BY: AMERICAN U–TEL
9760 SMITH ROAD
WILLOUHGBY, OHIO 44094
(440)946–6027 FAX:(440)946–7285

CHECKED BY: AE DATE: 11–23–12
DRAWN BY: WS DATE: 11–06–12
DRAWING NO: 17–12–18 SH. 22 OF 24

3/22/2013 BLU-PRINTS UNLIMITED INC 20 Howard St New London CT 860.444.6564 plots@bpunlpro.com

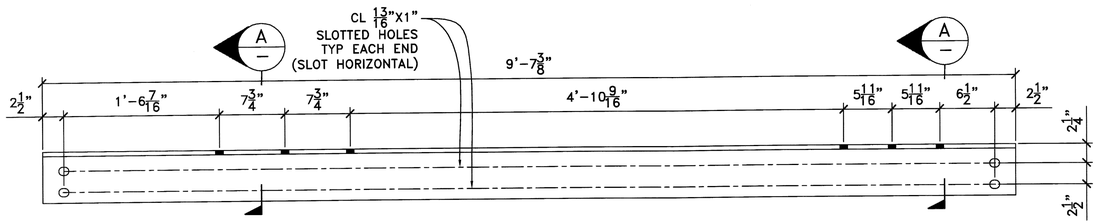

ITEM NO. 20 L6x4x1/2

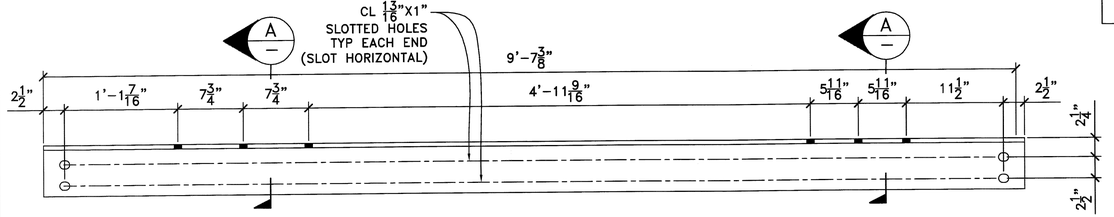

ITEM NO. 21 L6x4x1/2

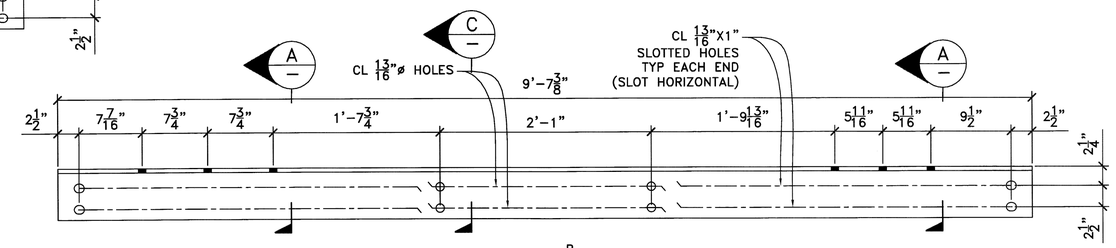

ITEM NO. 24^{R} L6x4x1/2 AS SHOWN

ITEM NO. 24^{L} L6x4x1/2 OPP HAND

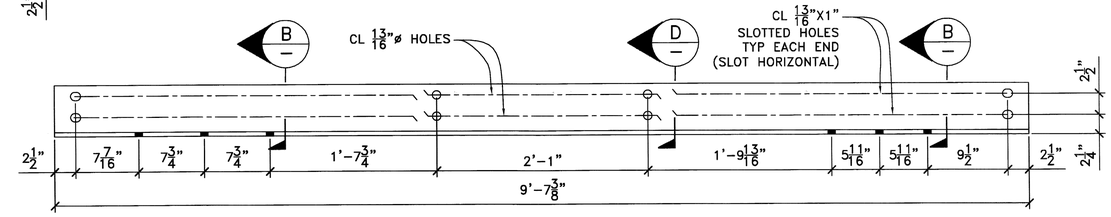

ITEM NO. 25^{R} L6x4x1/2 AS SHOWN

ITEM NO. 25^{L} L6x4x1/2 OPP HAND

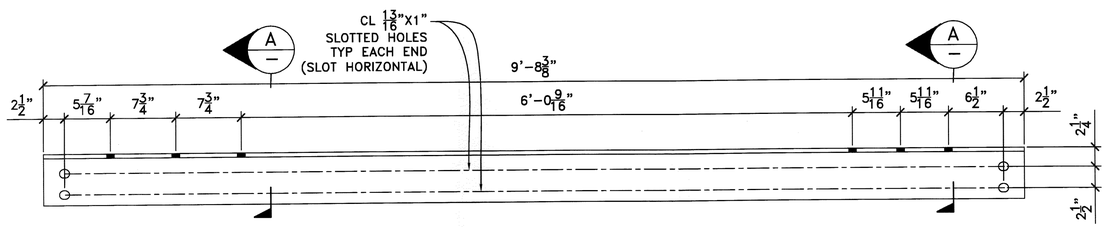

ITEM NO. 22 L6x4x1/2

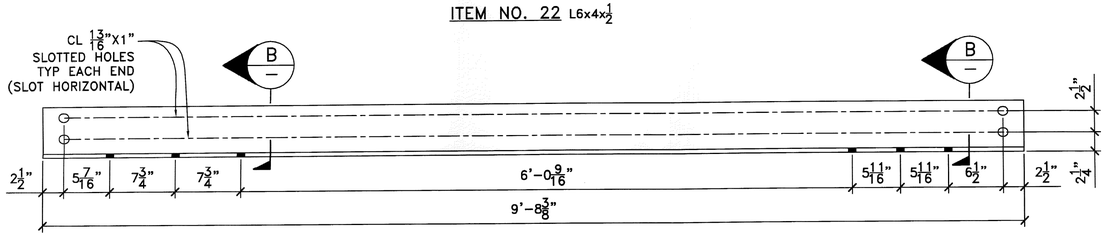

ITEM NO. 23 L6x4x1/2

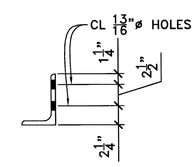

SECTION D
1 1/2"=1'-0

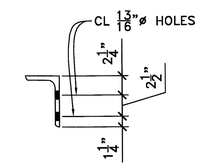

SECTION C
1 1/2"=1'-0

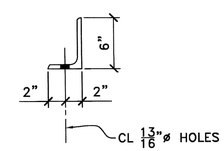

SECTION B
1 1/2"=1'-0

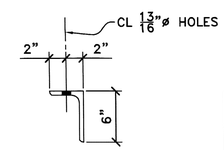

SECTION A
1 1/2"=1'-0

REV	COMMENTS	BY	DATE
2	APPROVAL	AE	03/04/13
1	APPROVAL	AE	01/24/13
0	APPROVAL	AE	11/27/12

MAINE KENNEBEC BRIDGE OVER
THE KENNEBEC RIVER
IN RICHMOND–DRESDEN MAINE

MANHOLE CAGE
DETAILS 8

ANDREW J. ELD, P.E.

JOB NO. 17-12

UTILITY CONDUIT SUPPORTS

STATE OF MAINE
ANDREW J. ELD
10262
LICENSED
PROFESSIONAL ENGINEER
PE NO. 10262

FURNISHED BY: AMERICAN U-TEL
9760 SMITH ROAD
WILLOUHGBY, OHIO 44094
(440)946-6027 FAX:(440)946-7285

CHECKED BY: AE DATE: 11-23-12
DRAWN BY: WS DATE: 11-06-12
DRAWING NO: 17-12-19 SH. 23 OF 24

3/22/2013 BLU-PRINTS UNLIMITED INC. 20 Howard St New London CT 860.444.6564 plots@bpunlpro.com

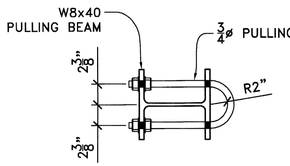

DETAIL 1/13 1/14 PULLING U-BOLT
1 1/2"=1'-0

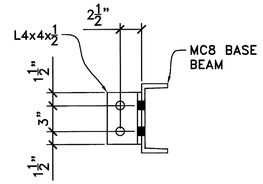

DETAIL 5/— CONNX OF MC8 TO WEB
1 1/2"=1'-0

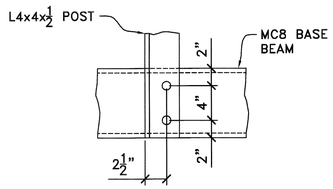

DETAIL 2/— CONNX OF POST TO C8 CAGE BASE SUPPORT
1 1/2"=1'-0

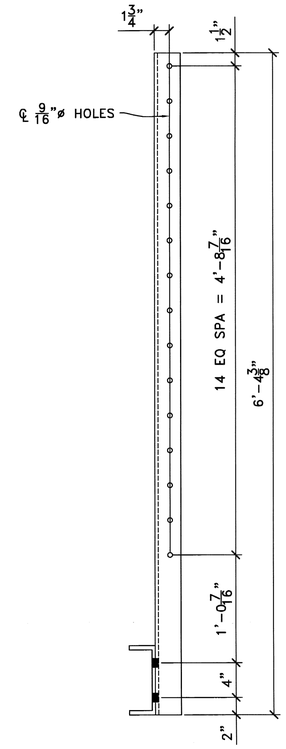

DETAIL 6/— L3x3x3/8 POWER CABLE RACK SUPPORT[TYP OF 4]
1 1/2"=1'-0

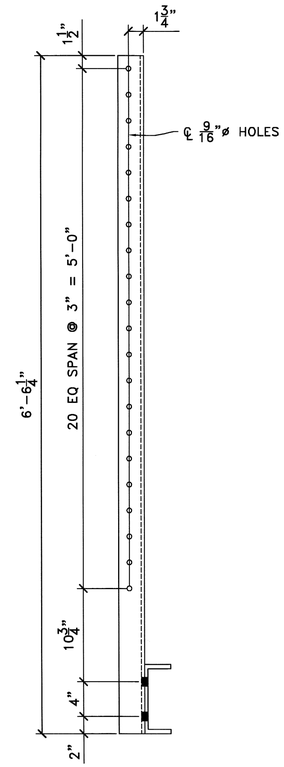

DETAIL 7/— L3x3x3/8 TELEPHONE CABLE RACK SUPPORT[TYP OF 4]
1 1/2"=1'-0

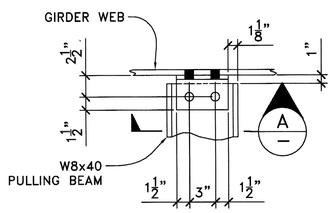

DETAIL 3/20 PULLING BEAM END CONNX
1 1/2"=1'-0

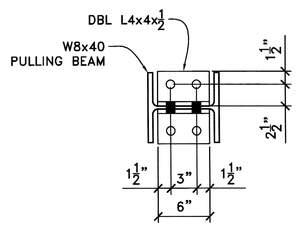

SECTION A/—
1 1/2"=1'-0

NOTE: ALL HOLES 15/16"ø FOR 7/8"ø H.S. BOLTS U.O.N.

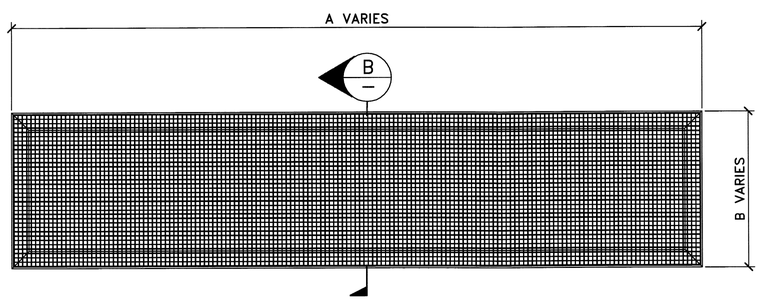

DETAIL 4/— WIRE MESH PANEL
1 1/2"=1'-0

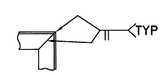

CORNER DETAIL

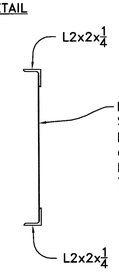

McMASTER-CARR GALVANIZED STEEL WELDED WIRE CLOTH 2x2 MESH SIZE [NUMBER OF OPENINGS PER IN] PART NO. 9217T35 OR EQUAL. WELD AS REQUIRED TO L2x2.

SECTION B/—
1 1/2"=1'-0

NOTE: ATTACH WIRE MESH PANELS TO CAGE FRAMING USING ZINC PLATED STAINLESS STEEL SEALING HEX WASHER HEAD SELF DRILLING SCREW FROM McMASTER-CARR PART NO. 94058A117 OR EQUAL. MAXIMUM SPACING BETWEEN SCREWS TO BE 24". AS AN ALTERNATE, THE PANELS CAN BE ATTACHED USING 3/8"ø STAINLESS STEEL BOLTS.

REV	COMMENTS	BY	DATE
2	APPROVAL	AE	03/04/13
1	APPROVAL	AE	01/24/13
0	APPROVAL	AE	11/27/12

MAINE KENNEBEC BRIDGE OVER THE KENNEBEC RIVER IN RICHMOND-DRESDEN MAINE

MANHOLE CAGE DETAILS 9

ANDREW J. ELD, P.E.

JOB NO. 17-12

UTILITY CONDUIT SUPPORTS

STATE OF MAINE ANDREW J. ELD 10262 LICENSED PROFESSIONAL ENGINEER

PE NO. 10262

FURNISHED BY: AMERICAN U-TEL
9760 SMITH ROAD
WILLOUHGBY, OHIO 44094
(440)946-6027 FAX:(440)946-7285

CHECKED BY: AE DATE: 11-23-12
DRAWN BY: WS DATE: 11-06-12
DRAWING NO: 17-12-20 SH. 24 OF 24

3/22/2013 BLU-PRINTS UNLIMITED INC 20 Howard St New London CT 860.444.6564 plots@bpuinpro.com