Fed Road Dist No	State	U.S.W.P. & R. Proj.	Fiscal Year	Sheet No.	Total Sheets
9	Maine	No 21		1	51

STATE OF MAINE

STATE HIGHWAY COMMISSION

DIRECTORS

OF THE

MAINE-KENNEBEC BRIDGE

OVER

KENNEBEC RIVER

RICHMOND - DRESDEN

SAGADAHOC & LINCOLN COUNTIES

U.S.W.P.F.R. PROJECT NO. 21

TOTAL LENGTH = 0.265 MILES

CONVENTIONAL SIGNS

State or National Line	Survey Line
County Line	Culvert
Town Line	Drop Inlet
Unfenced Property	Trolley Pole
Fence	Power Pole
Right of Way Line	Tel Pole
Traveled Way	Marsh
Railroad	Trees
Retaining Wall	Stone Wall

INDEX OF SHEETS

Sheet No. 1	Title Page	Sheet No 23-26	Steel Truss Details
Sheet No. 2-3	Survey Plans	27	Machinery Layout
Sheet No. 4	Soundings	28	Latch, Wedges & Oprs House
Sheet No. 5	Profile	29	Detail Richmond App
Sheet No. 6-13	Abut & Piers # 1-5 (inc 8)	30	Columns at Pier 1
Sheet No. 14-16	Fender Piers	31 - 32	Toll Houses
Sheet No 17-20	Piers 6-7	33	Electrical Wiring Layout
Sheet No 21	Reinforcing Steel		
Sheet No 22	Detail over Piers		

CONCRETE CLASSIFICATION

All concrete Grade B

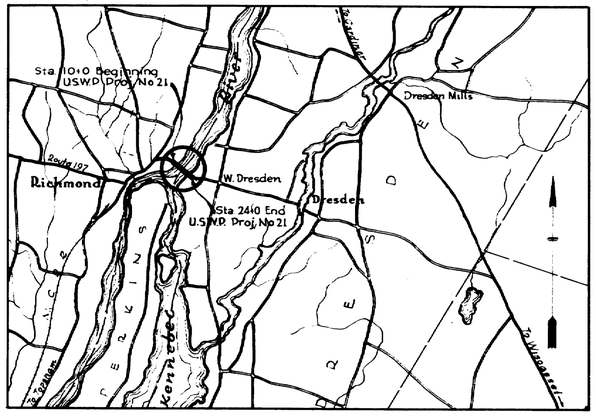

LOCATION MAP

Traced from U.S.G.S. Gardiner-Wiscasset Sheets

Scale = $\frac{1}{62,500}$

APPROVED:
MAINE STATE HIGHWAY COMMISSION

Paul C Thurston
CHAIRMAN

[signature]

[signature]
CHIEF ENGINEER.

APPROVED:
U. S. BUREAU OF PUBLIC ROADS

[redacted]
DISTRICT ENGINEER

[redacted]
CHIEF ENGINEER

[redacted]
DIRECTOR.

0 1 2 3 4 5 INCHES

¾ Mile To Richmond Village
Tie-Nail in Power Pole
Tie-Nail in Tel. Pole
Tie-Nail in Power Pole
S 68°30' E
Sydney Hopkins
Meadow
10 Miles To Gardiner (River Road)
To Brunswick
Auxiliary Sta. "E"
6"x24" Stone Culv.
RICHMOND
Magnetic North
Nov. 1929
Tie and B.M. Elev. 125.94 Horiz. Spike in Tel. Pole
Tie-Nail in Power Pole
Tie-Nail in RR Sign Post
6"x10" Plank Culv.
12"x24" Stone Culv.
P.C. Sta. 61+00.47
Herbert E. Bartlett
Meadow
Δ: 41°06'
D: 8°01'
T: 268.15
L: 512.68
R: 715.30
Maine Central Railroad
Auxiliary Sta. "H"
To Augusta
Match Line Sheet No. 2
Surveyed by Beckman Nov. 20, 1929
Plotted by Thomas and Beckman
DIRECTORS OF THE MAINE KENNEBEC BRIDGE
MAINE KENNEBEC BRIDGE
OVER
KENNEBEC RIVER
BETWEEN THE TOWNS OF
RICHMOND, SAGADAHOC CO.
AND
DRESDEN, LINCOLN CO.
SURVEY PLAN
SHEET NO 1 AUGUSTA, ME. JAN. 22, 1930
0 1 2 3 4 5 INCHES

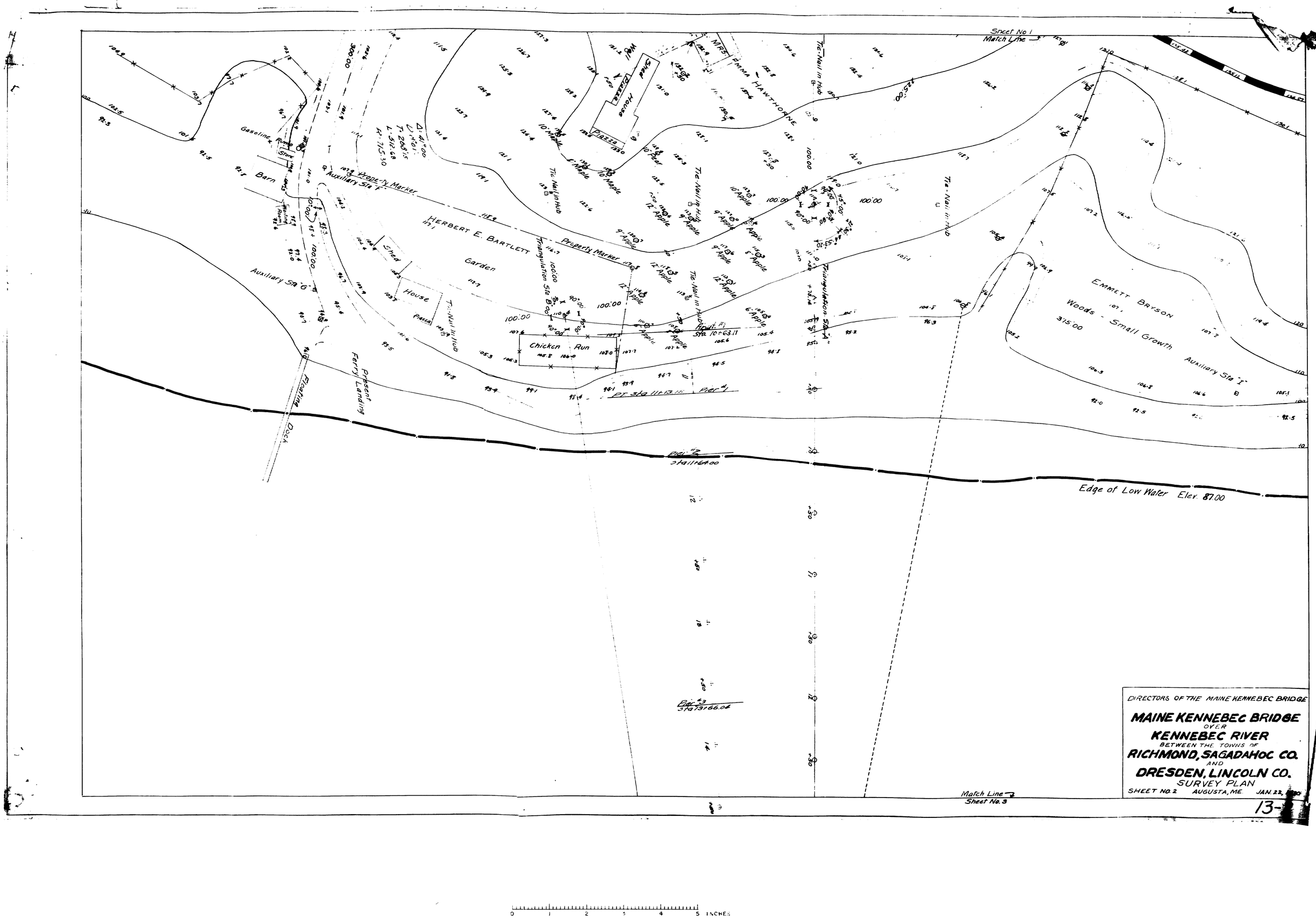
Sheet No 1
Match Line
Gasoline Pump
Store
Barn
Auxiliary Sta "F"
Property Marker
HERBERT E. BARTLETT
Garden
Shed
House
Piazza
Chicken Run
Triangulation Sta "B"
Triangulation Sta "A"
Tie-Nail in Hub
Well
Shed
Piazza
House
MRS. EMMA HAWTHORNE
EMMETT BRYSON
Woods - Small Growth
Auxiliary Sta "I"
Auxiliary Sta "G"
Present Ferry Landing
Floating Dock
Pier #1
Pier #2
Pier #3
Edge of Low Water Elev. 87.00
Match Line
Sheet No. 3
DIRECTORS OF THE MAINE KENNEBEC BRIDGE
MAINE KENNEBEC BRIDGE
OVER
KENNEBEC RIVER
BETWEEN THE TOWNS OF
RICHMOND, SAGADAHOC CO.
AND
DRESDEN, LINCOLN CO.
SURVEY PLAN
SHEET NO. 2 AUGUSTA, ME. JAN. 22,
13-
0 1 2 3 4 5 INCHES

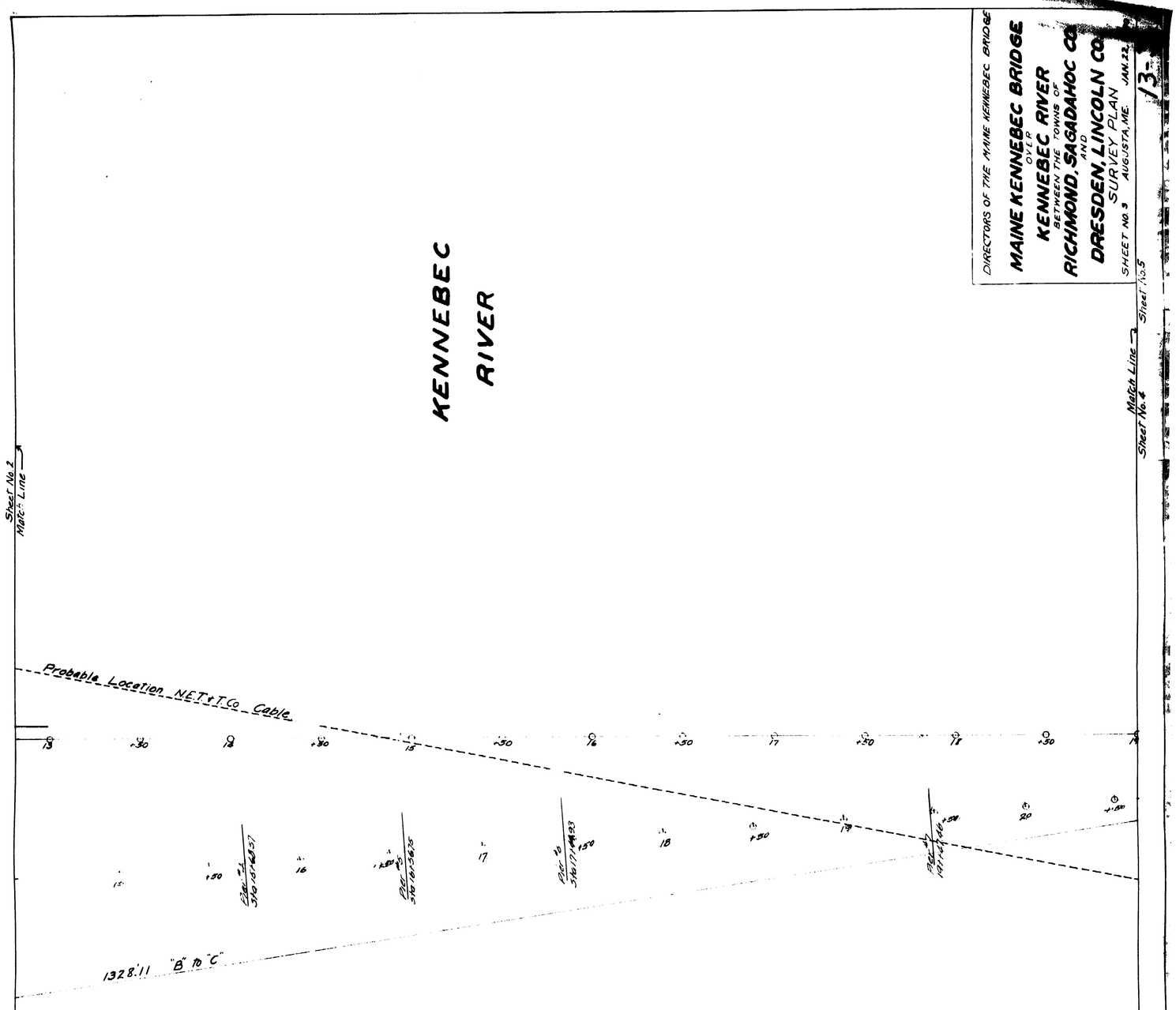

NOTES ON RIVER

Fresh tide water.

Low tide Nov. 11, 1929	Elev.	87.00
High tide Nov. 11, 1929		91.30
High tide in dry season		89.00
Annual high tide		95.00
Unusual high tide		96.50
Extreme high tide		100.00

During flood tide current eddies on Dresden side between ferry landing and point of land 300' north. Eddy formed by tide rising in channel on East side of Swan Island and being deflected by Richmond shore to point of land on Dresden side.

Tide in mid-channel attained a velocity of $2\frac{1}{2}$ feet per second or $1\frac{2}{3}$ miles per hour in calm weather. During rough weather or freshet season tide is probably much swifter.

Sheet No. 5
Match Line

Sheet No. 3
Match Line

Edge of Low Water Elev. 87.00

Auxiliary Sta. "J"

CHARLES B.

Swampy

"J" to "L" 1000.00

Approx. Property Line

Tie-Nail in Hub

Δ: 28°17'
D: 9°-0'
T: 130.79
L: 257.42
R: 607.93

HAROLD HOUDLETTE

Guinan

Frame Bungalow

Piazza

WALTER W. DENSMORE

Triangulation Sta. "I"

Plank Culk

Sta. 23+00 Abut. 2

PC Sta. 24+00.35

Pier 3

Pier 2

Pier 1

Abut. 1

Meadow

100.00 Tie-Nail in Hub

Shed

Tie-Nail in Hub

BM 2 Elev. 101.00
Horse Spike in 18" Maple Tree

Willows

Floating Dock

Present Ferry Landing

Lighting Buoy

To Barn

Piazza

Summer Hotel

WALTER W. DENSMORE

To Summer Cottages

Auxiliary Sta. "L"

SCALE
1 Inch = 30 Feet

DRESDEN

DIRECTORS OF THE MAINE KENNEBEC BRIDGE

MAINE KENNEBEC BRIDGE
OVER
KENNEBEC RIVER
BETWEEN THE TOWNS OF
RICHMOND, SAGADAHOC CO.
AND
DRESDEN, LINCOLN CO.
SURVEY PLAN
SHEET No. 4 AUGUSTA, ME. JAN. 193

13

0 1 2 3 4 5 INCHES

10 Miles To Randolph
(River Road)

Tie-Nail in 7" W. Birch

Tie-Nail in 9" W. Birch

Tie-Nail in Tel. Pole

Triangulation Sta. "D"

Triangulation Base-line "C" to "D" 774.746

FRANK S HALL

Auxiliary Sta. "K"

FRANK S HALL

Meadow

MORTON

CHARLES B. MORTON

House

Barn

Tie-Nail in Tel. Pole

Tie and BM #3 El. 122.10
Horiz. Spike in Tel. Pole

Tie-Nail in Old Stump

4 Miles To
Dresden Mills

Sheet No. 3
Match Line

Match Line
Sheet No. 4

Sheet No. 1 | Sheet No. 2 | Sheet No. 3 | Sheet No. 5 | Sheet No. 4

Arrangement of Sheets for Survey Plan

DIRECTORS OF THE MAINE KENNEBEC BRIDGE

MAINE KENNEBEC BRIDGE
OVER
KENNEBEC RIVER
BETWEEN THE TOWNS OF
RICHMOND, SAGADAHOC CO.
AND
DRESDEN, LINCOLN CO.
SURVEY PLAN
SHEET NO 5 AUGUSTA, ME. JAN 22, 1930

0 1 2 3 4 5 INCHES

13

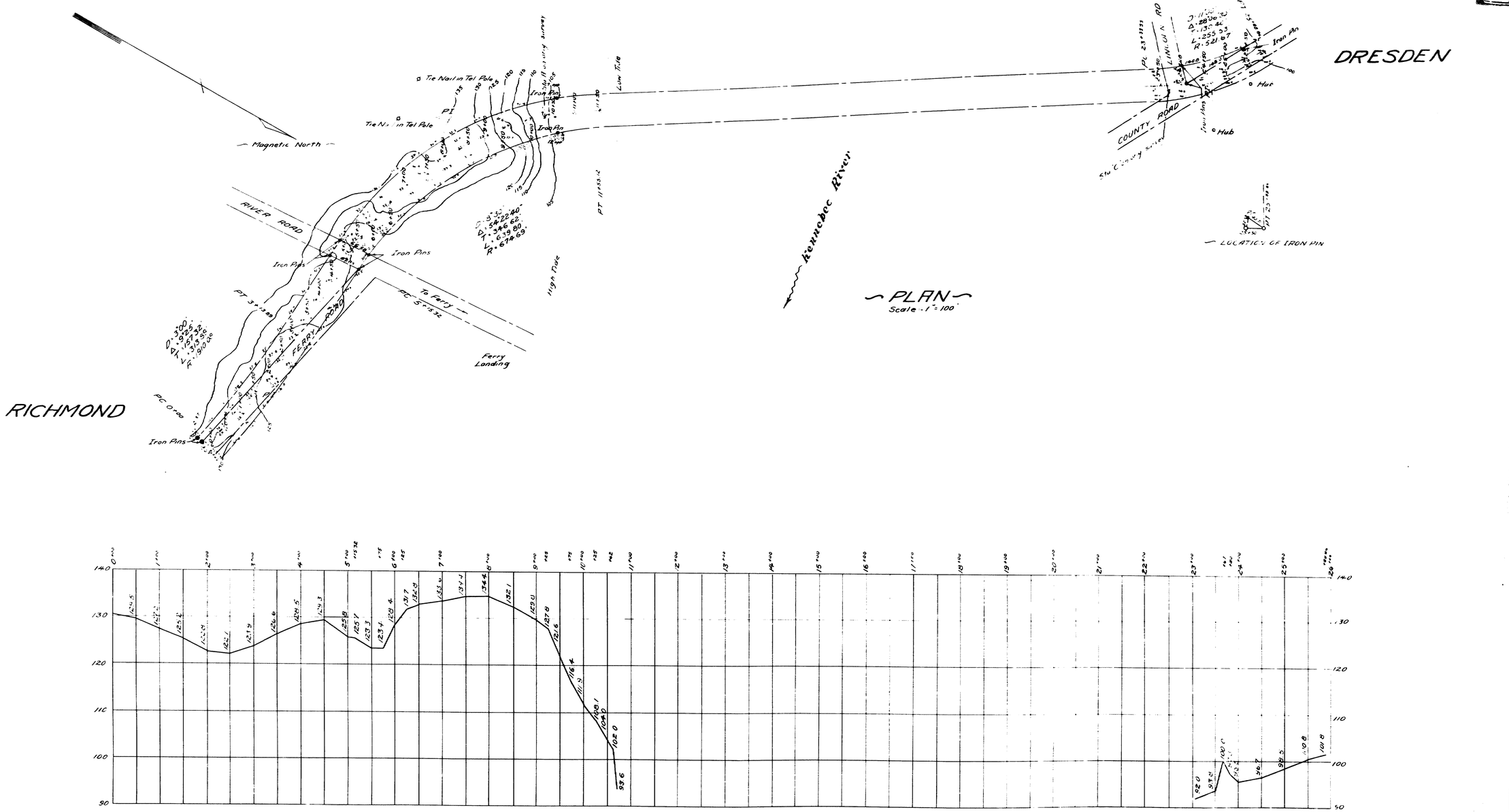

DIRECTORS OF THE MAINE KENNEBEC BRIDGE

MAINE KENNEBEC BRIDGE

OVER

KENNEBEC RIVER

BETWEEN THE TOWNS OF

RICHMOND, SAGADAHOC CO.

AND

DRESDEN, LINCOLN CO.

SURVEY PLAN SHOWING RIGHT OF WAY

Sheet 1 of Augusta, Me[illegible]-12-30

13[illegible]

Survey by Leighton
Plotted & traced by [illegible]

0 1 2 3 4 5 INCHES

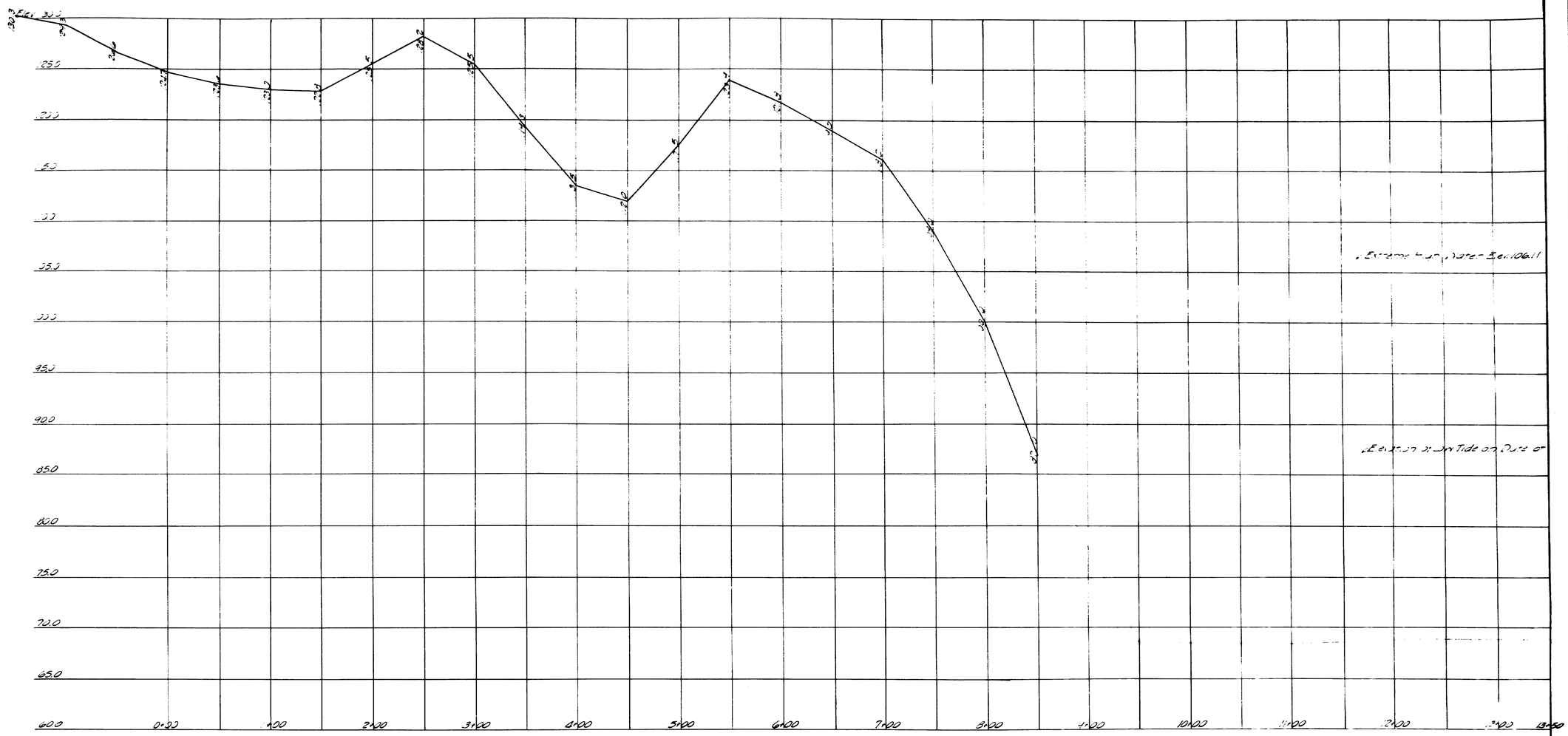

SCALES
Horizontal - 1"=50'
Vertical - 1"=5'

M.D.T.

MAINE KENNEBEC BRIDGE
OVER
KENNEBEC RIVER
BETWEEN THE TOWNS OF
RICHMOND, SAGADAHOC CO.
AND
DRESDEN, LINCOLN CO.
PROFILE
SHEET of AUGUSTA Feb 7, 1990

13-

0 1 2 3 4 5 INCHES

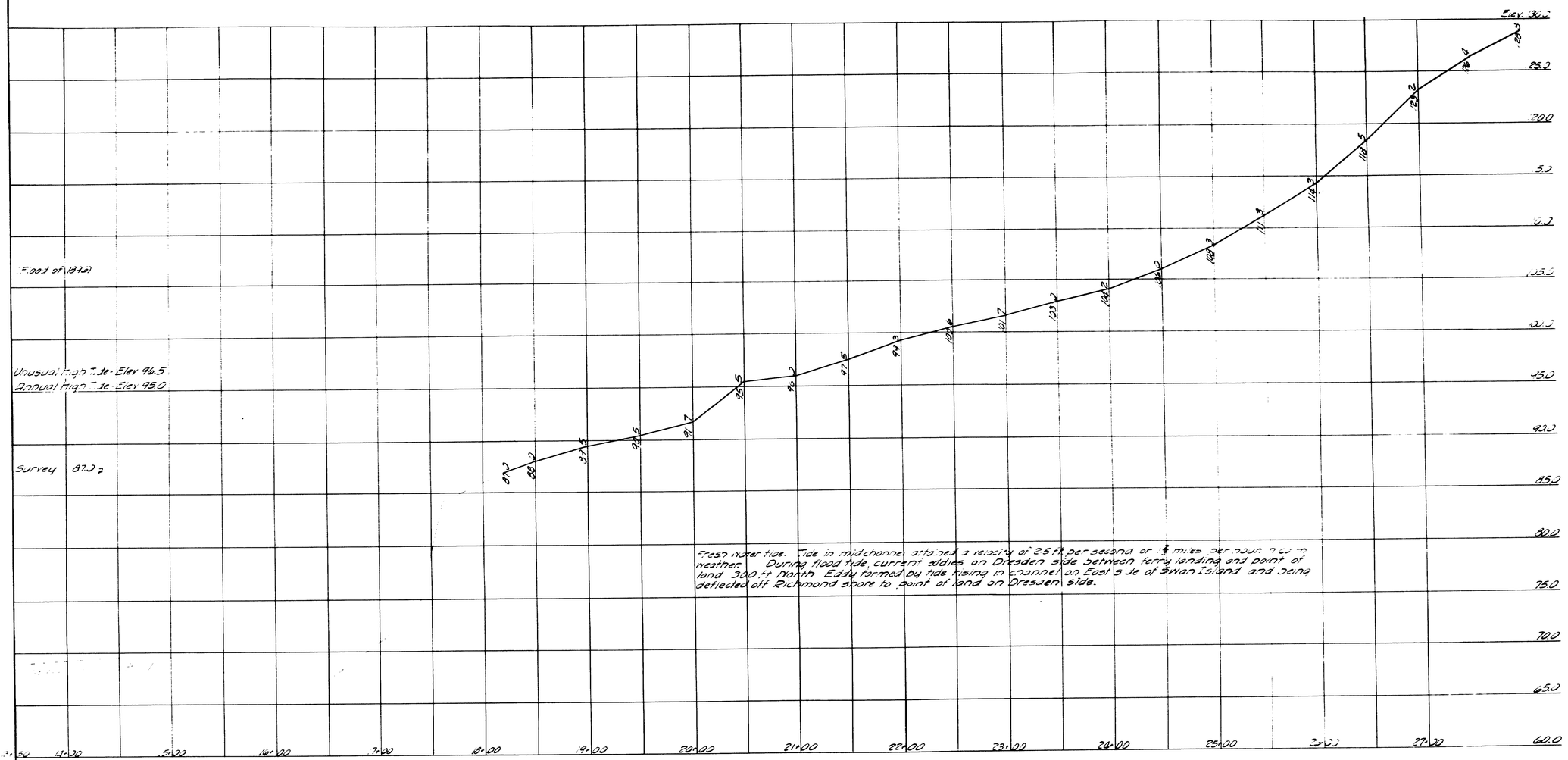

SCALES
Horizontal - 1"=50'
Vertical - 1"=5'

MAINE KENNEBEC BRIDGE
OVER
KENNEBEC RIVER
BETWEEN THE TOWNS OF
RICHMOND, SAGADAHOC CO.
AND
DRESDEN, LINCOLN CO.
PROFILE

SHEET OF AUGUSTA FEB 7 1930

13-8

M.B.T.

1

0 1 2 3 4 5 INCHES

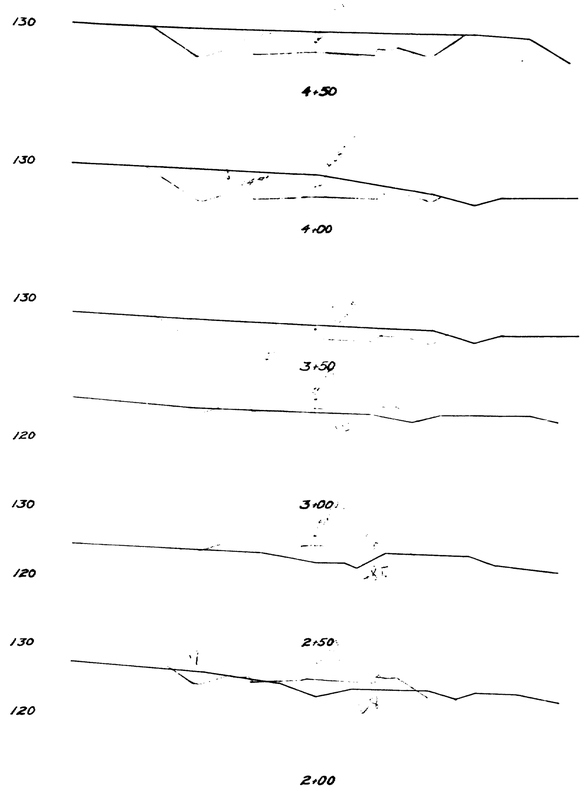

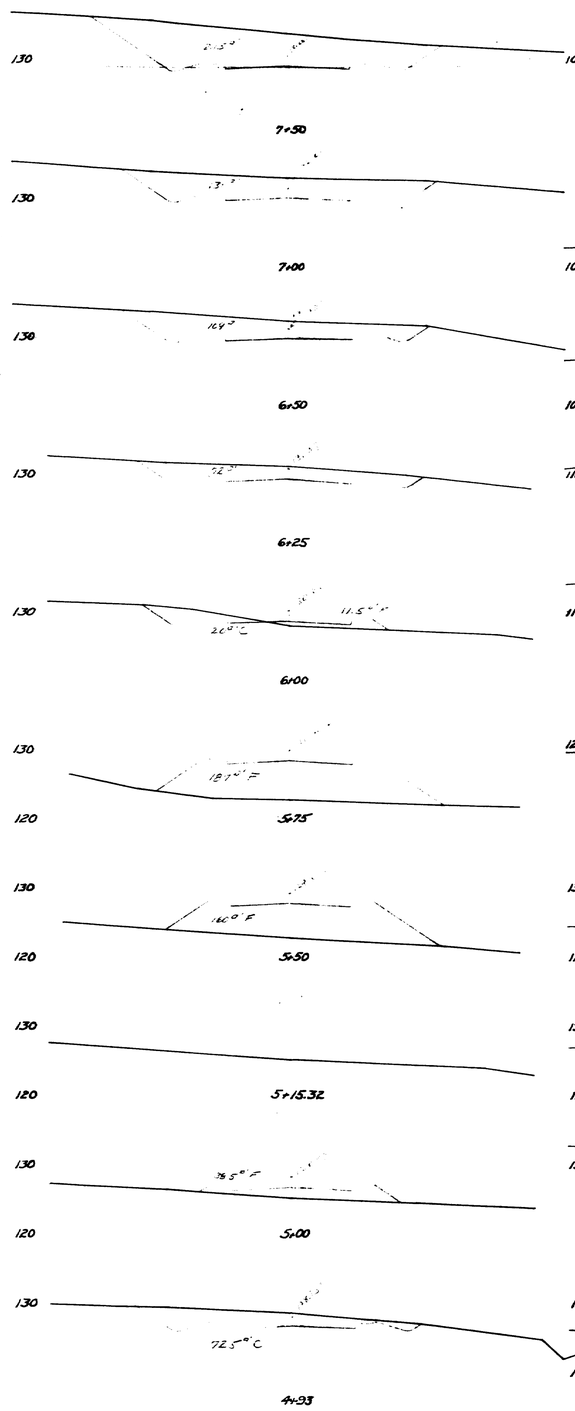

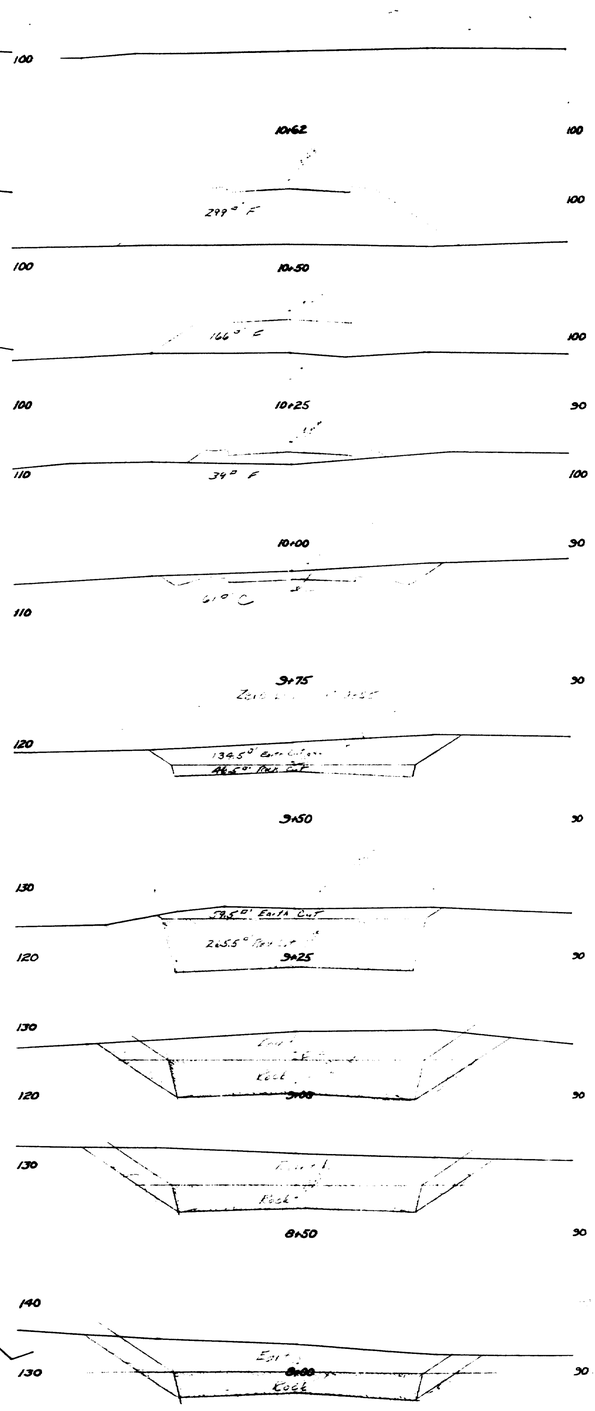

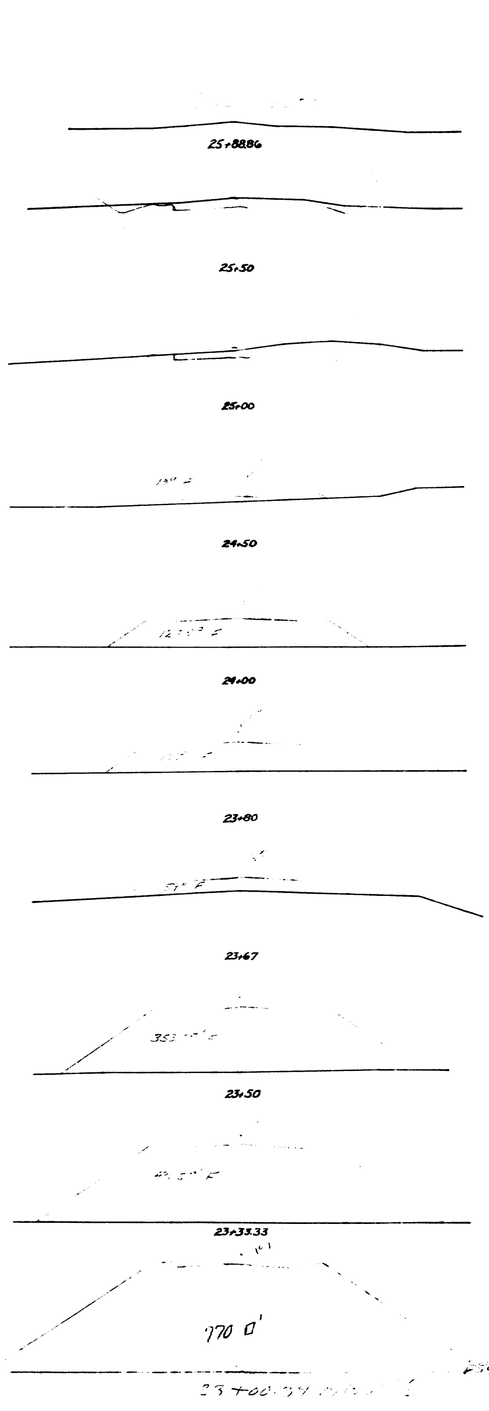

Cross-Sections ~ Approaches To Maine Kennebec Bridge ~ Scale 1"=10'

0 1 2 3 4 5 INCHES

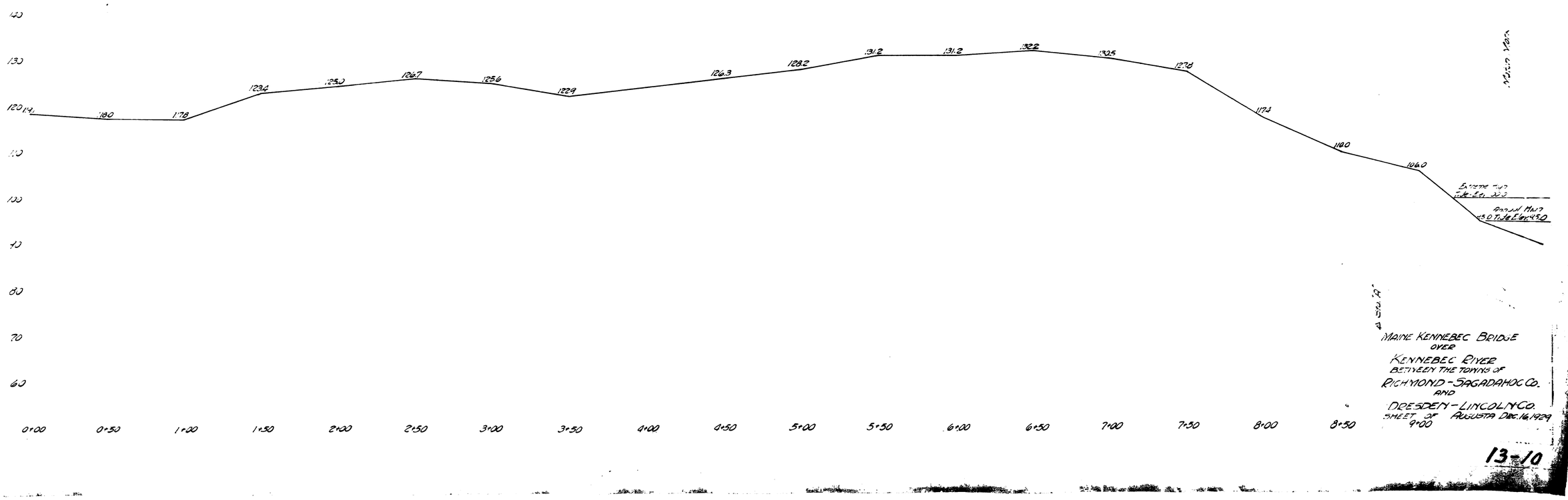

0 1 2 3 4 5 INCHES

MAINE KENNEBEC BRIDGE
D.E.R.
KENNEBEC RIVER
BETWEEN THE TOWNS OF
RICHMOND - BATH-WOOLWICH CO.
AND
DRESDEN - LINCOLN CO.
SHEET OF AUGUSTA DEC 16 1924

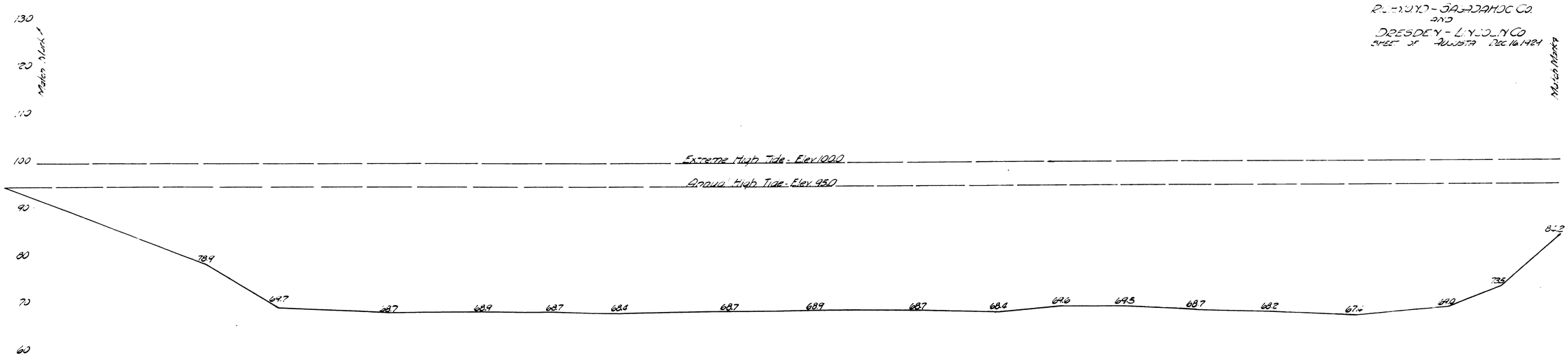

PROFILE OF RIVER BED ON TRANSIT LINE "A"

13-11

0 1 2 3 4 5 INCHES

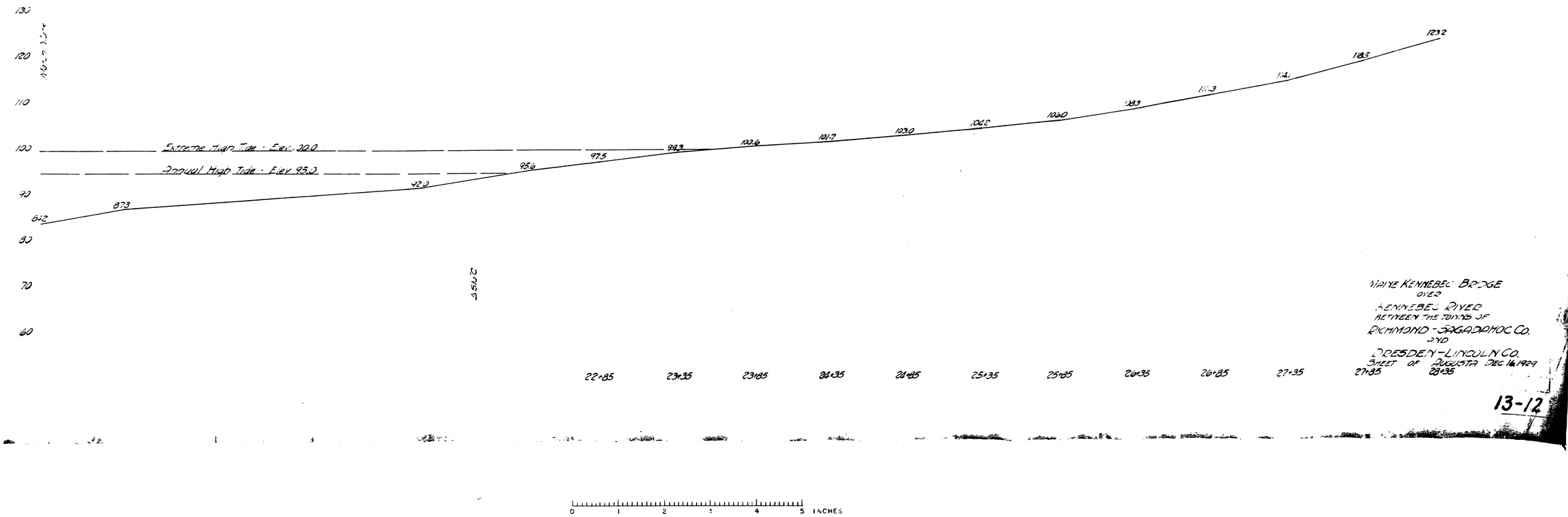

WIDEN KENNEBEC BRIDGE
OVER
KENNEBEC RIVER
BETWEEN THE TOWNS OF
RICHMOND - SAGADAHOC CO.
AND
DRESDEN - LINCOLN CO.
SHEET OF AUGUSTA DEC 16 1929

13-12

SPAN No. 3

MEMBER	MATCH MARK	REQUIRED
	24-12	1pb
L0U1 (End Posts)	13-1	2pc, 2pd
	19-7	2ab^R, 1ab^R
		1pb
	12-11	
	7-8	2pk
U1U2 (Top Chords)	6-5	2pk
	6 Pls P5	2Pls P5
U2U3 (Top Chords)	11-10	1pc
	8-9	2pc
	3-4	
U3U3 (Top Chords)	10-9	
	4Pls P4	4Pls P4
L0L2 (Bottom Chords)	19-20	1ho, 2dd
L2U2	20-8	1pa, 1af^R, 1af^L
L3U3 (Verticals)	21-9	1at^R, 1at^L
U2L3 (Diagonals)	8-21	
T3 2	5-8	
T3 3	4-9	
	3-10	
T3 4 (Sway Struts)	3a-9a	
P52^R	Have 1P52^R	1pf
P54	" 1P54	
(Portal Struts)		
F5	15a-21a	1ab
	16-21	1af^L, 1af^L, 1ab
	17-20	1af^L, 1af^L, 1ab
F6	17a-19a	1ab
(Fl Beams)	Note Require(New) 26am7^R_L, 21am7^R_L, 28ag7^R_L 33ag7^R_L, for all Fl Beams Spans 3 & 4	
S1	Have 3	
S2	" 6	
S3	" 4	
S6	" 4	
S7	" 10	
S8	" 2	
S9	" 4	
(Stringers)	Note: Require (New) 37af^R, 37af^L for all stringers S1, S2, S3, S4, S5 Spans 3 & 4	
T3	Have 1T3	
T5	" 3T5	6pc
(Top Laterals)		
FS1 (Fixed Shoe)	1FS1 of 19	
PINS L0	Have 4 complete	

MEMBER	MATCH MARK	REQUIRED
Top lateral Plates	Have 1LP1^L, 1LP3^L 1LP5^L, 2LP7	
M5-M2	Have 2M5-M2	4pf, 4pg
M2-M6	Have 2M2-M6	4ph
M6-M3	" 3M6-M3	6pk
M3-M7	" 2M3-M7	
M7-M4	" 1M7-M4	
M7-M4A (Struts)	" 1M7-M4A	
HR14^R_L	Have 1 HR4^R 2 HR4^L	
HR15^R_L (Hand Railing)	" 1 HR15^R " 2 HR15^L Only rail available for Spans 3 & 4	

NOTES SPANS 3 & 4.

Salvaged material suitable for use in the new structure is listed. Material not listed or noted to be furnished for complete erection of the structure. Salvaged members are listed in table under Column "Member" and match marking wherever possible under Column "Match Mark" Parts necessary to complete each member or members are listed under Column "Required", unless otherwise noted Part of the salvaged "S am7^R_L and ag7^R_L are on the Fl. Beams and part on the stringers. All salvaged "S at^R_L are on the stringers.

SPAN 5

No structural steel of this span salvaged.

SPAN No. 4

MEMBER	MATCH MARK	REQUIRED
	48-36	1pb
L0U1 (End Posts)	43-31	1pb, 1pc, 1pd
	37-25	1pb
	42-30	1pb
	36-35	2pk
	31-32	2pk
U1U2 (Top Chords)	30-29	2pk
	25-26	2pk
	7 Pls-P5	1 P1-P5
	35-34	2pc
	32-33	2pc
U2U3 (Top Chords)	29-28	2pc
	26-27	2pc
	34-33	
U3-U3 (Top Chord)	27-28	2pd
	8 Pls P4	
(Bott Chord)	43-44	4pg, 2pd, 1ho 1aa^L, 1fa
L2U2 (Vertical)	44-32	1ah^R, 1ah^L 1at^R, 1at^L
L3U3 (Vertical)	39-27	1at^R, 1at^L
	46-34	1at^R, 1at^L
	45-33	1at^R, 1at^L
L4U4 (Vertical)	45a-33a	1at^R, 1at^L
U1L2 (Diag.)	36-47	2ab^L
U2L3 (Diag.)	32-45	
	29-40	
U3L4 (Diag.)	28-38a	
	33-45a	
T3 2	26-35	1ho
	29-32	
T3 3	27-34	
	28-33	
T3 4 (Sway Struts)	27a-33a	
P31	25-36	
	30-31	
P52	Have 2P52^R	2pf
	" 1P32^L	1pf
P53	" 2P53	
P54 (Portal Struts)	" 4P54	
S31	" 1S51	
S32 (Struts)	" 3S52	5pk
SB2	Have 4 SB2	
SB3	" 1 SB3	1ph
SB4 (Diag. Struts)	" 3 SB4	1pg

MEMBER	MATCH MARK	REQUIRED
F5	38-47	1ab
	39-46	1aa^R, 1aa^L 2ab
	39a-45a	2aa^R, 2aa^L 1ab
	40-45	2aa^R, 2aa^L 1ab
	41-44	2aa^R, 2aa^L 1ab
	37a-47a	1aa^R, 1aa^L 1ab
F6 (Fl Beams)	41a-43a	1aa^R, 1aa^L 2ab
See Note Span 3 for ag7^R_L, am7^R_L		
S1	Have 3	
S2	" 4	
S3	" 4	
S4	" 1	
S5	" 1	
S6	" 3	
S7	" 12	
S8	" 1	
S9	" 6	
(Stringers)	See Note Under Span 3 for af^R_L	
T1	Have 1T1	1fa
T2	" 2T2	1fa
T3	" 2T3	
T4	" 4T4	
T5	" 4T5	2pc
T6	" 4T6	
(Top Laterals)		
FS1 (Fixed Shoe)	1FS1 of 43	
PINS L0	Have 4 Complete	
Top lateral Plates	Have 1LP3^L, 1LP5^R 1LP5^L, 2LP7	
L4	Have 1L4	
L5	Have 1L5	
L6 (Bott Laterals)	" 1L6	
M5-M2	Have 3M5-M2	6pf, 6pg
M2-M6	" 4M2-M6	6ph
M6-M3	" 3M6-M3	6pk
M3-M7	" 4M3-M7	
M7-M4	" 2M7-M4	4pn
M7-M4A (Struts)	" 2M7-M4A	
L3-M7	" 1L3-M7^L	
M7-U4 (Diagonals)	" 4 M7-U4	
B2	Have 1-B2	1af^L
B3 (Beams)	" 2-B3	
See Note under Span 3 for Handrails		
3G1	Have 1SG1	2A1, 1GA1
3G2	Have 1SG2 2b A1 arc on L3U3AR	

MACHINERY - SWING SPAN

MEMBER	ASSEMBLY MARK
A	
2 End Wedge Shoes	MW3
1 Latch Catch	ML9
B	
12 Rack Segments	MG1
2 Ctr Wedge Shoes	MW9
1 Center Casting	MC4
1 Oil Ring	MC9
5 Ball Races, Series 7 Bearings	5 7W4 5 7B18 5 7517
C	
1 Shaft	MS16
1 Bearing	MB8
1 Coupling	MC1
1 Lever	ML4
1 Collar	MC2
1 Bearing	MB7
1 Lever	ML2
1 Con Wedge Link	ML1
1 Shaft	MS10^R
1 Coupling	MC1A
1 Lever	ML26
1 Bearing	MB7
1 Shaft	MS1A
1 Lever	ML15
1 Coupling	MC11A
1 Lever	ML2A
1 Collar	MC14
1 Bearing	MB16
1 Wedge Link	ML12
2 Shafts	MS15
1 Shaft	MS11
2 Collars	MC3
1 Lever	ML6
1 Top Casting	MC5
2 Couplings	MC11
1 Bearing	MB16
1 Lever	ML2A
1 Wedge Link	ML2
1 Lever	ML15
1 Worm Gear	MG10
1 " wheel	MG9
2 Bearings	MB16
1 Bearing Cap	BC10
1 " "	MB10
1 Gear	MG50
1 Pinion Gear	MG2
1 Shaft	MS1
1 Bearing	MB1
1 Gear	MG3
2 Balance wheel Blocks	MB19
4 End wedge Guides	MW1
2 Center - "	MW7
2 End Wedges	MW2
3 Conn. Links	ML1
2 " "	ML10
6 Bearings	MB7
2 "	MB8
1 "	MB5
6 "	MB16
1 "	MB6
1 "	MB4
2 "	MB14
2 "	MB9
1 "	MB8
3 Levers	ML2
2 "	ML3
2 Couplings	MC1
1 "	MC11B
1 Collar	MC2
1 Bearing	MB11
1 Chain	RC1
1 "	RC2
1 Sprocket	SP2
1 "	SP4

MEMBER	ASSEMBLY MARK
1 Gear	MG5
1 "	MG4
1 Shaft	MS2
1 Wedge Sprocket	SP3
1 Gear	MG11
1 Shaft	MS7
1 Gear	MG14A
1 Collar	MC13
1 Shaft	MS8
1 Gear	MG17
1 "	MG18
1 Shaft	MS5
1 Gear	MG12
1 "	MG13
1 Shaft	MS6
1 Gear	MG14
1 "	MG15
1 Collar	MC13
1 Shaft	MS4
1 Gear	MG8
1 Sprocket	SP1
1 Collar	MC13
2 Bearings	MB3
1 Shaft	MS3
1 Gear	MG6
1 "	MG7
1 Collar	MC13
1 Bearing	MB3
3 Collector Rings	CR1 (1 Spare now missing)
2 " "	CR2
1 Gear	MG18
1 Bearing	MB15
1 Collar	MC17
1 Latch	ML8
3 Bearings	MB3
2 "	MB12
1 Top disc	MC7
1 Bottom "	MC8

SPANS 1 and 2

SPAN	DESCRIPTION
1	3 Lab op 3 Lab ay
2	1 Lab 3 Lb as^R 3 Lb as^L 3 Lab 3 Lbam
2	5 Pls P2 8 Lab
1, 2	Col C1 (new) Col C2 "

4 Swedge Anchor bolts 1 1/8 x 1'-6" A81 (Pier 1)
10 Swedge Anchor bolts 3/4 x 1'-9, Hex. nuts, & washers (Pier 2)

Note: Material listed for Spans 1 & 2 are parts required to complete these spans.

Straightening of stringers in Span No. 1 will not be required.

Note: MACHINERY.
Material under "A" is in place on Pier No. 6.
Material under "B" is in suitable condition to be used in new structure.

Material under "C" is to become property of the Contractor. Parts of Machinery in this list may be used in the new structure, if suitable, at the option of the Contractor.

Parts not listed above in "A", "B" or "C" were not salvaged and are to be furnished.

Bearings listed having bearing caps are complete with caps and bushings. Others are complete with bushings.

Town 12-08
Bridge 2506

MAINE STATE HIGHWAY COMMISSION
DIRECTORS OF THE
MAINE KENNEBEC BRIDGE
OVER
KENNEBEC RIVER
BETWEEN THE TOWNS OF
RICHMOND – SAGADAHOC CO.
And
DRESDEN – LINCOLN CO.
SALVAGED STRUCTURAL STEEL & MACHINERY
Sheet of Augusta Maine Oct. 1937

13-L3A

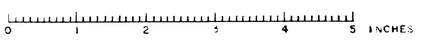

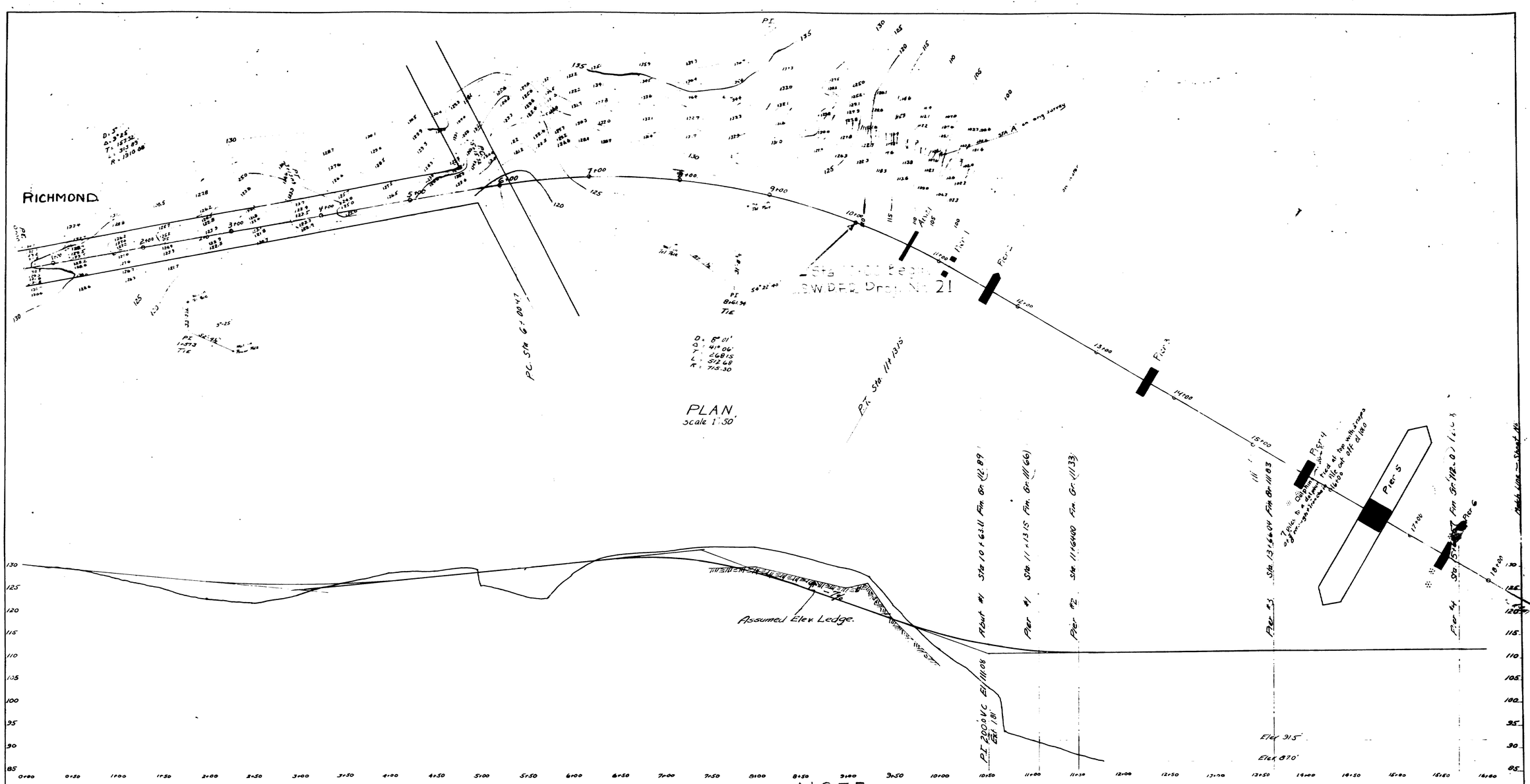

NOTE

Sheets numbered "Sheet 5" are original plans
" " "Sheet 5A" are new plans

Complete shop details of structural steel and machinery are available also complete working drawings of operators house and the two toll houses.

DIRECTORS OF THE MAINE KENNEBEC BRIDGE

MAINE KENNEBEC BRIDGE
OVER
KENNEBEC RIVER
BETWEEN THE TOWNS OF
RICHMOND, SAGADAHOC CO.,
AND
DRESDEN, LINCOLN CO.
LOCATION SURVEY
SHEETS OF THE AUGUSTA, ME.

2 of 33

0 1 2 3 4 5 INCHES

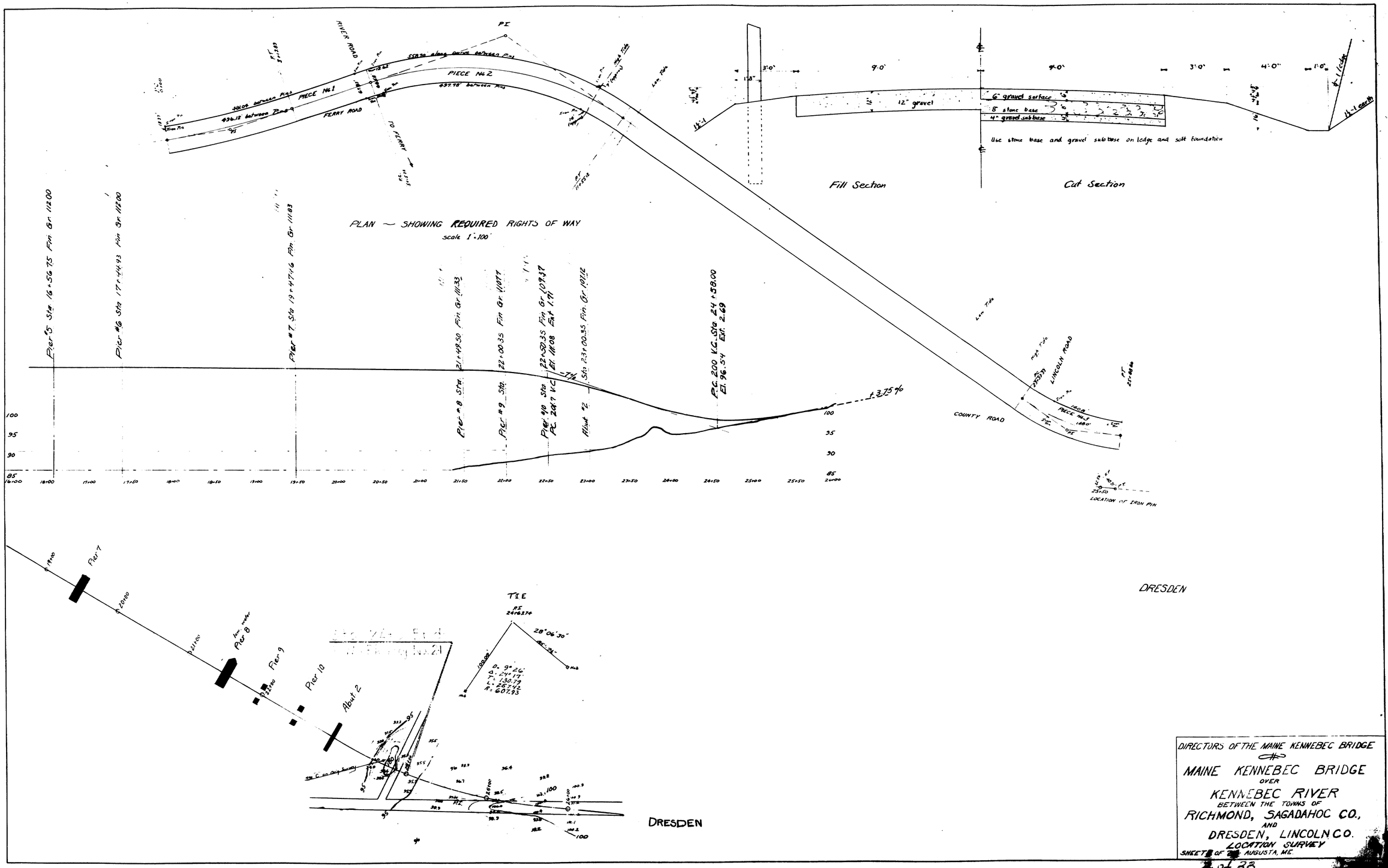
PLAN ~ SHOWING REQUIRED RIGHTS OF WAY
scale 1" = 100'
PIECE No 1
PIECE No 2
FERRY ROAD
RIVER ROAD
TO FERRY
Fill Section
Cut Section
12" gravel
6" gravel surface
8" stone base
4" gravel subbase
Use stone base and gravel subbase on ledge and soft foundation
LINCOLN ROAD
COUNTY ROAD
LOCATION OF IRON PIN
Pier #5 Sta 16+56.75 Fin Gr 112.00
Pier #6 Sta 17+44.93 Fin Gr 112.00
Pier #7 Sta 19+47.16 Fin Gr 111.83
Pier #8 Sta 21+49.50 Fin Gr 111.33
Pier #9 Sta 22+00.35 Fin Gr 110.77
Pier #10 Sta 22+50.35 Fin Gr 109.37
PC 201.7 V.C. El. 111.08 Ext 1.71
Abut #2 Sta 23+00.35 Fin Gr 107.12
P.C. 200 V.C. Sta 24+58.00
El. 96.54 Ext. 2.69
+3.75%
-7%
Pier 7
Pier 8
Pier 9
Pier 10
Abut 2
TIE
28°06'30"
DRESDEN
DRESDEN
DIRECTORS OF THE MAINE KENNEBEC BRIDGE
MAINE KENNEBEC BRIDGE
OVER
KENNEBEC RIVER
BETWEEN THE TOWNS OF
RICHMOND, SAGADAHOC CO.,
AND
DRESDEN, LINCOLN CO.
LOCATION SURVEY
SHEET 3 OF 33 AUGUSTA, ME.
3 of 33
0 1 2 3 4 5 INCHES

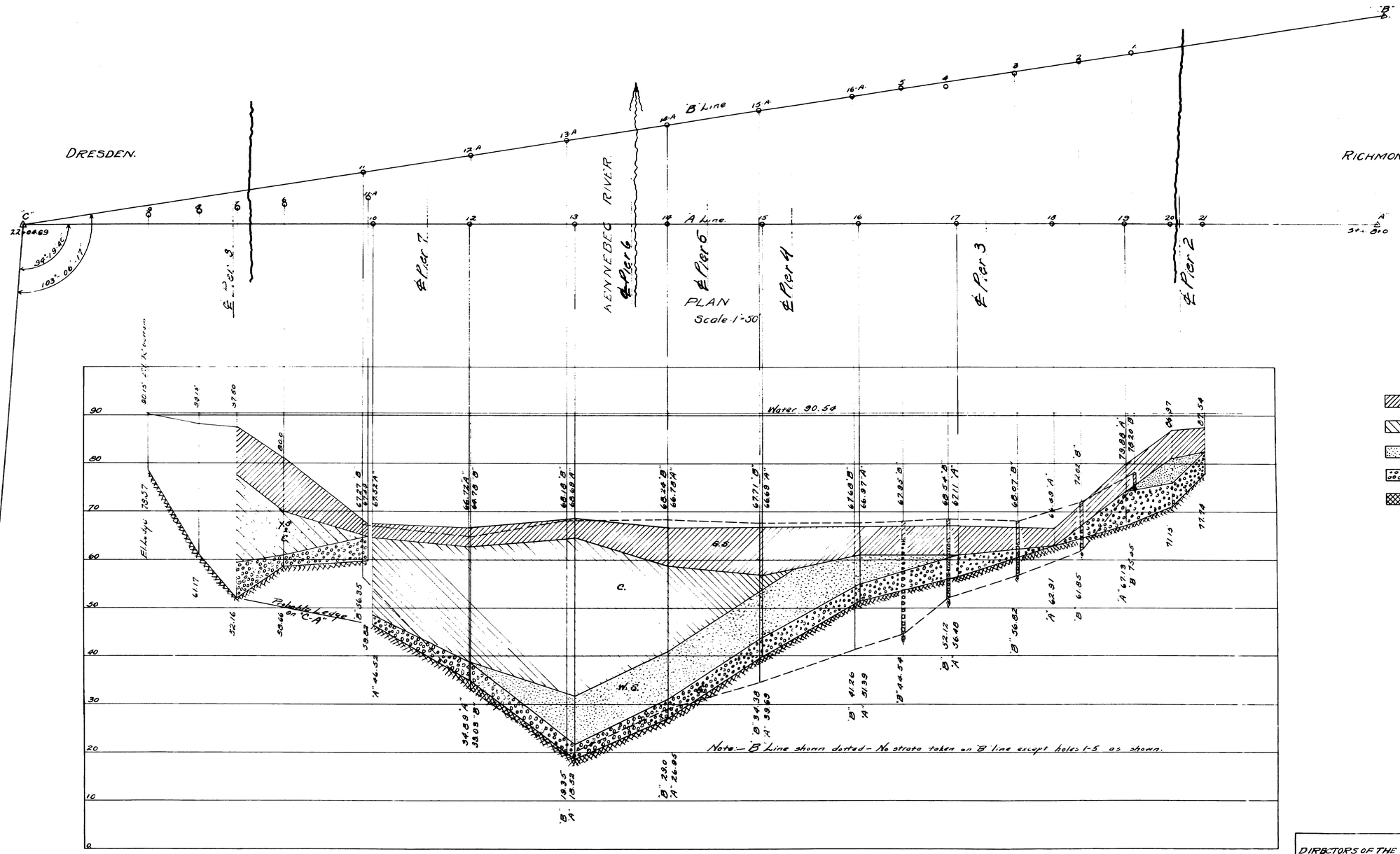

PROFILE
Hor. 1"=50' Vert. 1"=10'.

DIRECTORS OF THE MAINE KENNEBEC BRIDGE

MAINE KENNEBEC BRIDGE
OVER
KENNEBEC RIVER
BETWEEN THE TOWNS OF
RICHMOND, SAGADAHOC CO.
AND
DRESDEN, LINCOLN CO.

SOUNDINGS

SHEET 1 OF 33 SHEETS AUGUSTA FEB. 20, 1933

1 of 33

Sta. 10+0 Begin. U.S.W.P.F.R. Proj. No. 21

Sta. 24+0 End U.S.W.P.F.R. Proj. No. 21

RICHMOND APPROACH

DRESDEN APPROACH

Abut. 1 | Pier 1 | Pier 2 | Pier 3 | Pier 4 | Pier 5 | Pier 6 | Pier 7 | Pier 8 | Pier 9 | Pier 10 | Abut. 2

Fin. G. 112.89 | Sta. 10+63.11 | Fin. G. 111.66 | Sta. 11+13.15 | Fin. G. 111.33 | Sta. 11+64.00 | Fin. G. 111.83 | Sta. 13+66.04 | Fin. G. 111.20 | Sta. 15+68.57 | Fin. G. 111.20 | Sta. 17+44.93 | Fin. G. 111.82 | Sta. 19+19.96 | Fin. G. 111.33 | Sta. 21+49.80 | Fin. G. 110.77 | Sta. 22+10.35 | Fin. G. 109.37 | Sta. 22+30.35 | Sta. 23+10.35

Fixed | Exp. | Fixed | Exp. | Fixed | Exp. | Fixed | Exp. | Fixed | Exp. | Fixed

50'-0½" | 50'-10½" | 202'-0½" | 202'-6⅜" | 176'-4½" | 202'-6⅜" | 202'-0½" | 50'-10½" | 50'-0" | 50'-0"

El. 100.00

107.82 | 106.64 | 107.14 | 107.31 | 106.75 | 104.94 | 107.31 | 106.75 | 107.14 | 107.82 | 106.64

Sta. 16+56.75

Normal High Water 91.5

Normal Low Water 87.0

90 | 85 | 80 | 75 | 70 | 65 | 60 | 55 | 50 | 45 | 40 | 35 | 30 | 25 | 20 | 15 | 10

87.0 | 87.5 | 86.97 | 83.0 | 77.07 | 77.79 | 77.15 | 71.29 | 68.25 | 72.0 | 62.33 | 62.33 | 62.0 | 62.0 | 62.0 | 63.0 | 65.75 | 67.99 | 62.0 | 80.0 | 83.0 | 78.57 | 82.15 | 84.0 | 86.6

62.38 | 59.30 | 46.33 | 42.89 | 21.97 | 18.94 | 33.96 | 54.82 | 58.66 | 57.16 | 57.17

75.5 | 75.5 | 76.0 | 75.5

Ledge or Rock

Pier Pushed in direction of Fric. exp.

Pier Pushed in direction of Fric. exp.

Pier Pushed down Stream

Scales

Vertical 1"=10'

Horizontal 1"=40'

4'

DIRECTORS OF THE MAINE KENNEBEC BRIDGE

MAINE KENNEBEC BRIDGE OVER KENNEBEC RIVER BETWEEN THE TOWNS OF RICHMOND SAGADAHOC, CO. AND DRESDEN LINCOLN, CO.

GENERAL PLAN

SHEET 6 OF 33 AUGUSTA ME. APRIL 1940

6 of 33

0 1 2 3 4 5 INCHES

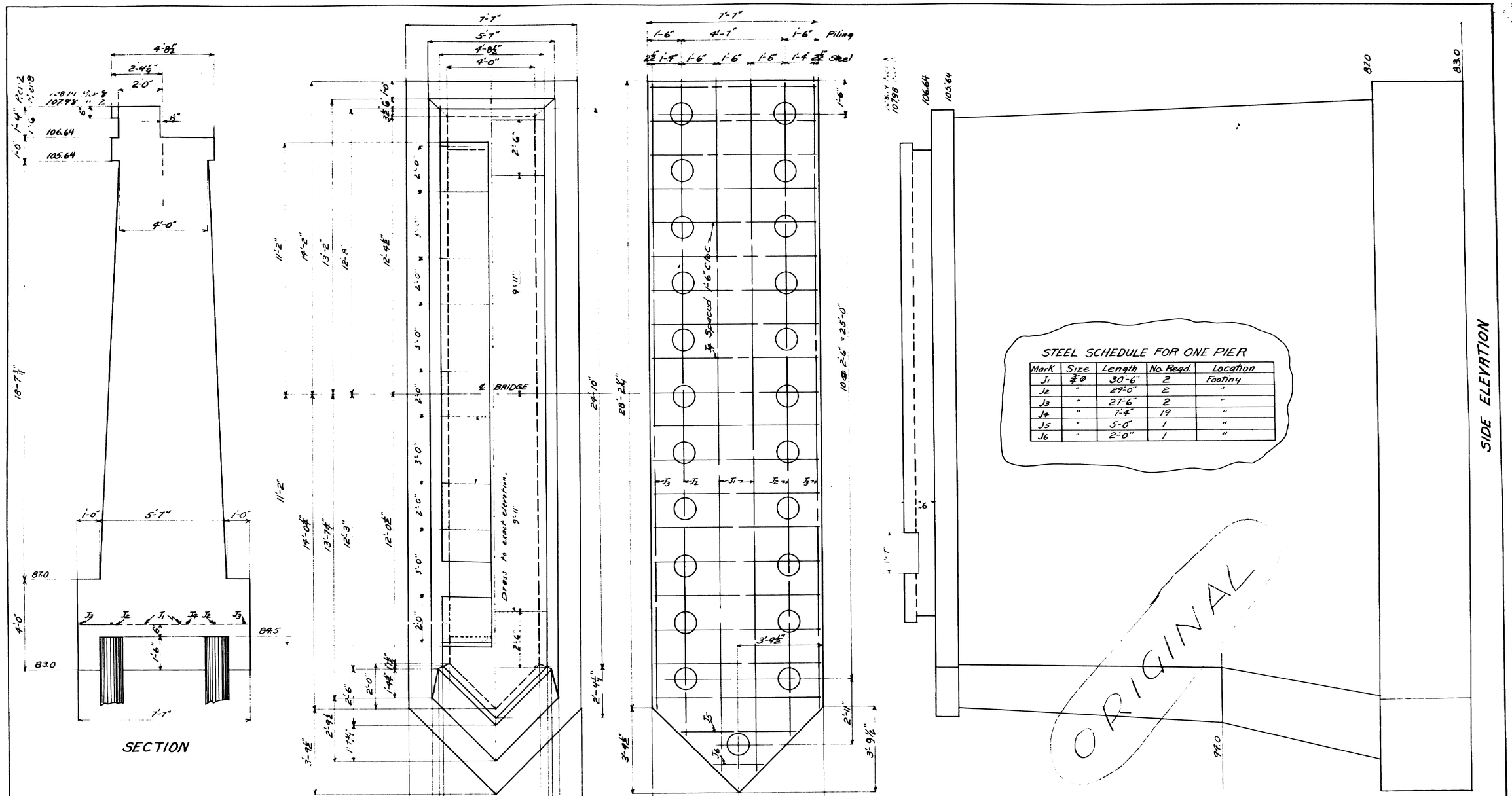

STEEL SCHEDULE FOR ONE PIER

Mark	Size	Length	No. Reqd.	Location
J1	3/4"Ø	30'-6"	2	Footing
J2	"	29'-0"	2	"
J3	"	27'-6"	2	"
J4	"	7'-4"	19	"
J5	"	5'-0"	1	"
J6	"	2'-0"	1	"

Note: Seal to be placed in one continuous run. Construction joints to be thoroughly cleaned and coated with neat cement before next course is placed.

DIRECTORS OF THE MAINE KENNEBEC BRIDGE

MAINE KENNEBEC BRIDGE
OVER
KENNEBEC RIVER
BETWEEN THE TOWNS OF
RICHMOND SAGADAHOC, CO
AND
DRESDEN LINCOLN, CO
PIERS NO. 2 and 8
SHEET 8 of 33 AUGUSTA ME APRIL 3 1930

Revised 7/8/30 Opening for telephone Conduit
Revised 11/7/30 Et for approach span pier 8 Zoom

8 of 33.

0 1 2 3 4 5 INCHES

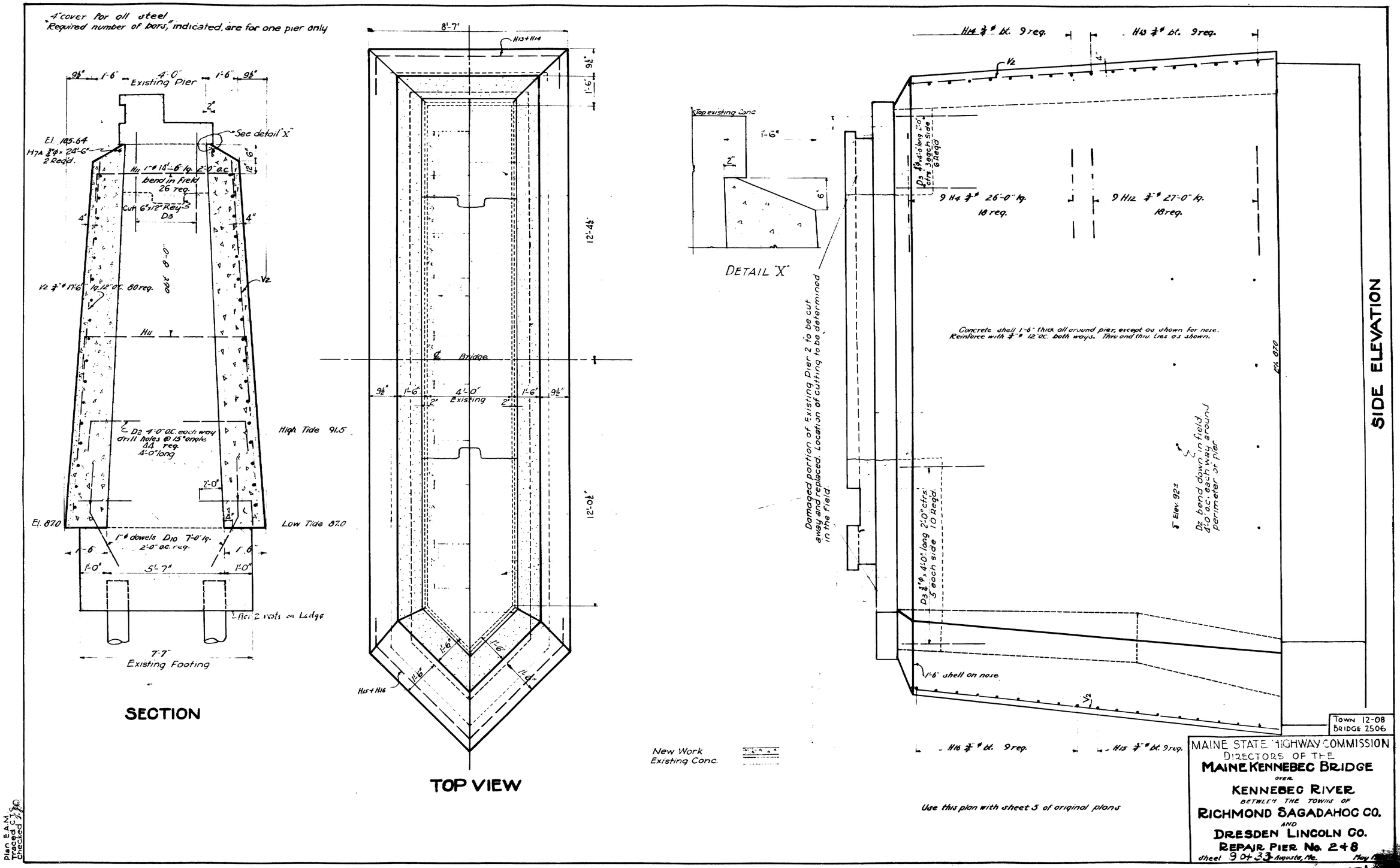

Town 12-08
Bridge 2506

MAINE STATE HIGHWAY COMMISSION
DIRECTORS OF THE
MAINE KENNEBEC BRIDGE
OVER
KENNEBEC RIVER
BETWEEN THE TOWNS OF
RICHMOND SAGADAHOC CO.
AND
DRESDEN LINCOLN CO.
REPAIR PIER No. 2+8
Sheet 9 of 33 Augusta, Me. May

Plan E.A.M.
Traced C.T.S.
Checked

13

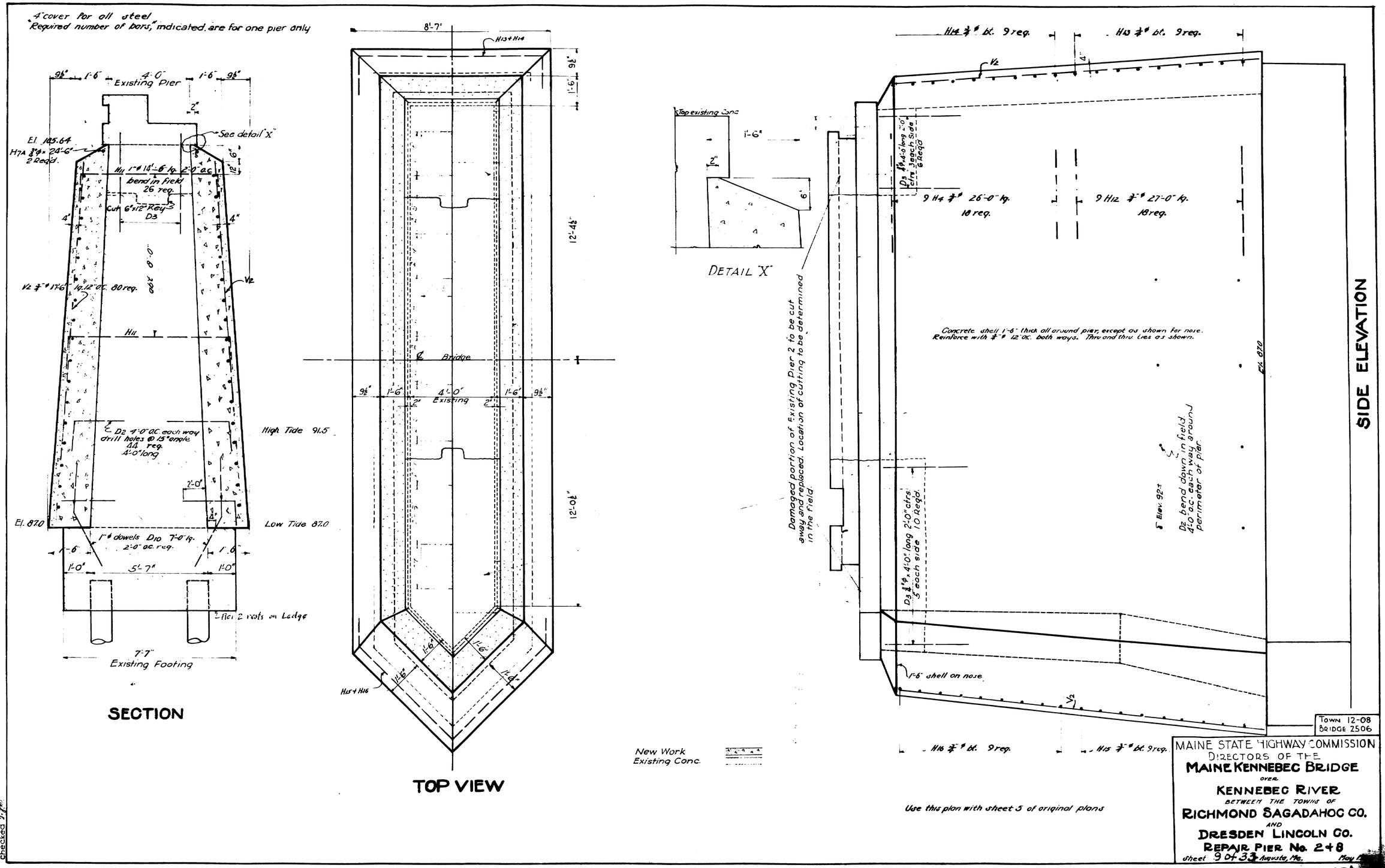

4" cover for all steel
"Required number of bars," indicated, are for one pier only
4'-0" Existing Pier
See detail "X"
El. 105.64
H7A 3/4"φ x 24'-6" 2 Req'd.
H11 1"φ 14'-6" lg. 2'-0" o.c. bend in field 26 req.
Cut 6"x12" Key D3
V2 3/4"φ 17'-6" lg. 12" o.c. 80 req.
H11
D2 4'-0" o.c. each way drill holes @ 15° angle 44 req. 4'-0" long
High Tide 91.5
El. 87.0
Low Tide 87.0
1"φ dowels D10 7'-0" lg. 2'-0" o.c. req.
5'-7"
7'-7" Existing Footing
SECTION
8'-7"
H13+H14
Bridge
4'-0" Existing
12'-4½"
12'-0½"
H15+H16
TOP VIEW
Top existing Conc.
DETAIL "X"
Damaged portion of Existing Pier 2 to be cut away and replaced. Location of cutting to be determined in the field.
H14 3/4"φ bt. 9 req.
H13 3/4"φ bt. 9 req.
9 H4 3/4"φ 26'-0" lg. 18 req.
9 H12 3/4"φ 27'-0" lg. 18 req.
Concrete shell 1'-6" thick all around pier, except as shown for nose. Reinforce with 3/4"φ 12" o.c. both ways. Thru and thru ties as shown.
D3 3/4"φ x 4'-0" long 2'-0" ctrs 3 each side 6 Req'd
D3 3/4"φ x 4'-0" long 2'-0" ctrs 5 each side 10 Req'd
Elev. 92±
D2 bend down in field 4'-0" o.c. each way around perimeter of pier
El. 87.0
1'-6" shell on nose
H16 3/4"φ bt. 9 req.
H15 3/4"φ bt. 9 req.
SIDE ELEVATION
New Work
Existing Conc.
Use this plan with sheet 5 of original plans
Town 12-08
Bridge 2506
MAINE STATE HIGHWAY COMMISSION
DIRECTORS OF THE
MAINE KENNEBEC BRIDGE
OVER
KENNEBEC RIVER
BETWEEN THE TOWNS OF
RICHMOND SAGADAHOC CO.
AND
DRESDEN LINCOLN CO.
REPAIR PIER No. 2+8
Sheet 9 of 33 Augusta, Me.
Plan E.A.M.
Traced C.T.S.
Checked

13

4" cover for all steel unless noted

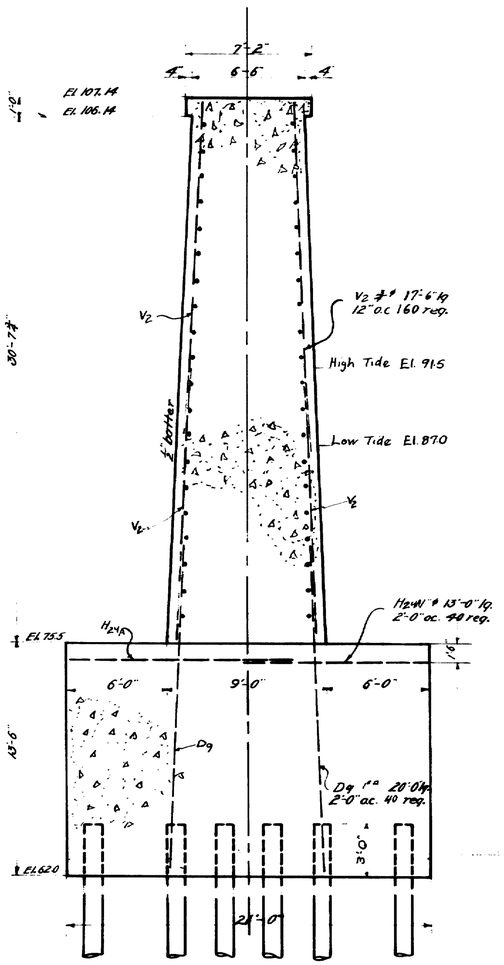

SECTION

Note: Seal to be placed in one continuous run. Construction joints to be thoroughly cleaned and coated with neat cement before next course is placed.

View of old Pier No 3 tipped from original position.

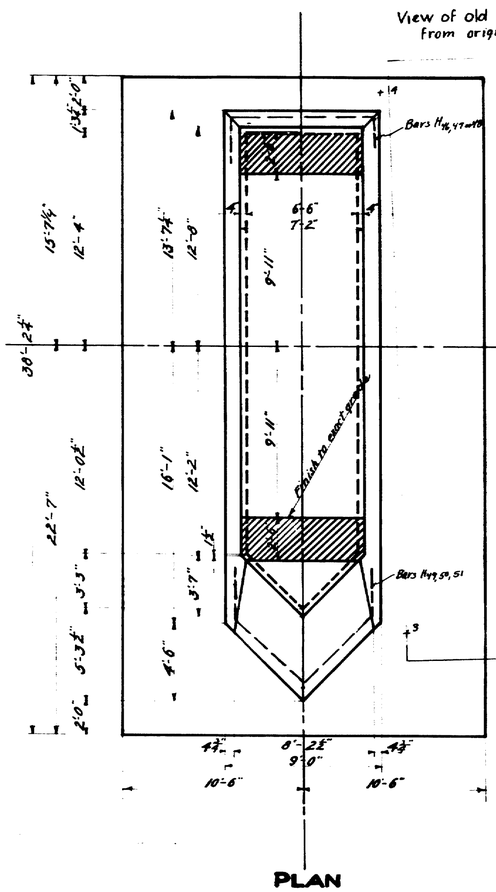

PLAN

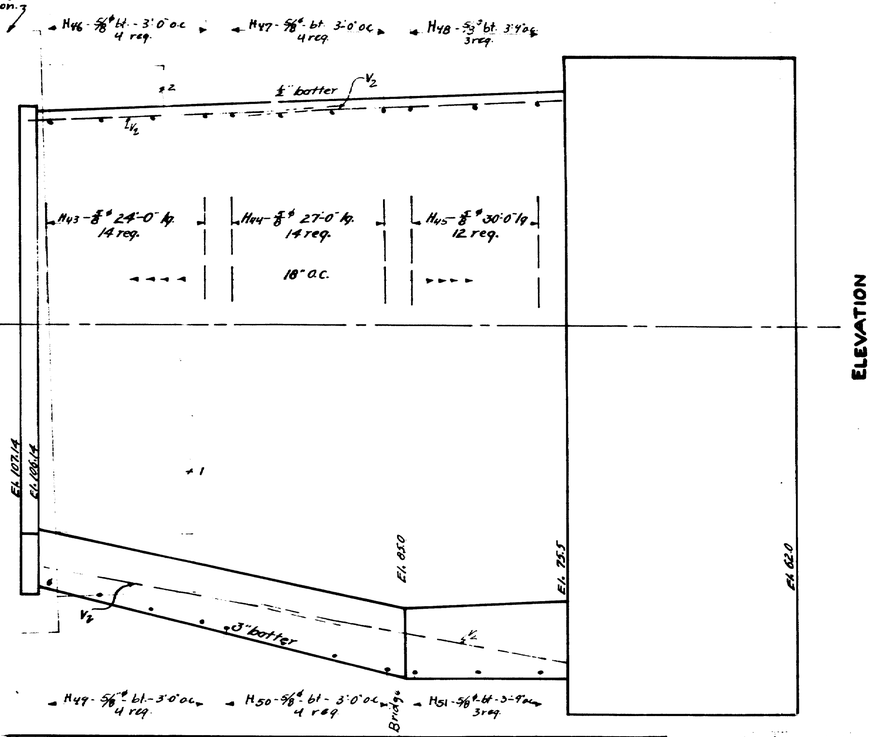

ELEVATION

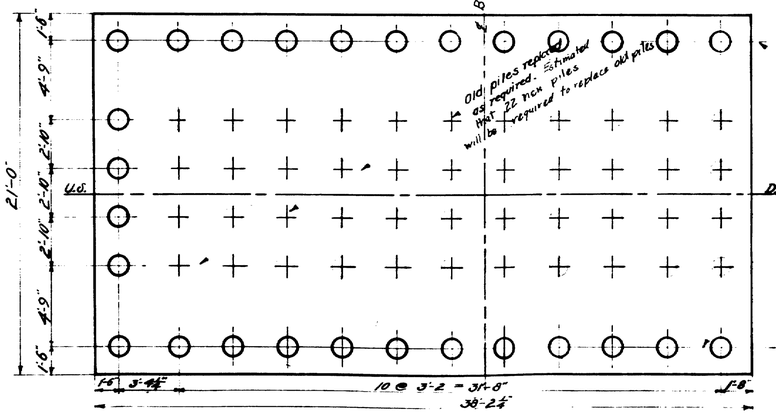

PILE PLAN

TOWN 12-08
BRIDGE 2506

MAINE STATE HIGHWAY COMMISSION
DIRECTORS OF THE
MAINE KENNEBEC BRIDGE
OVER
KENNEBEC RIVER
BETWEEN THE TOWNS OF
RICHMOND SAGADAHOC CO.
AND
DRESDEN LINCOLN CO.
NEW PIER No. 3

Sheet 100-39 Augusta, Maine May

Plan E.A.M.
Traced C.T.S.
Checked T.J.D.

13-17

0 1 2 3 4 5 INCHES

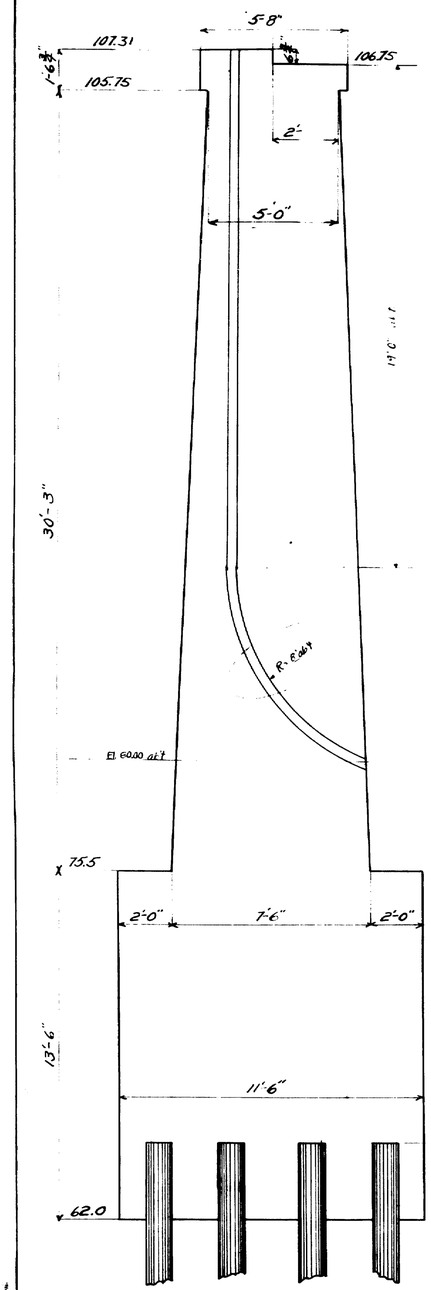

SECTION AA

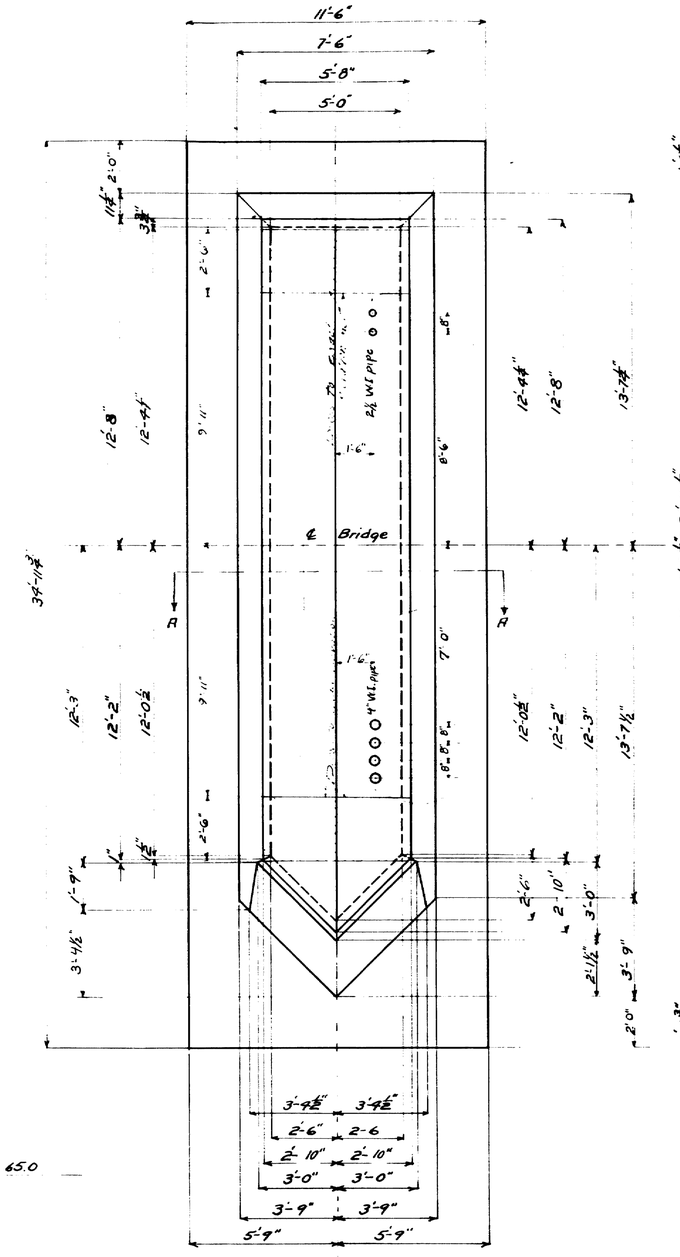

TOP VIEW

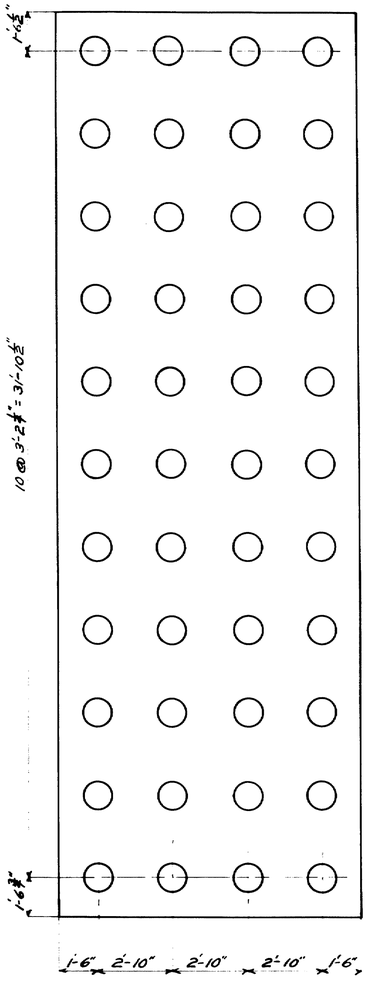

PILE LAYOUT

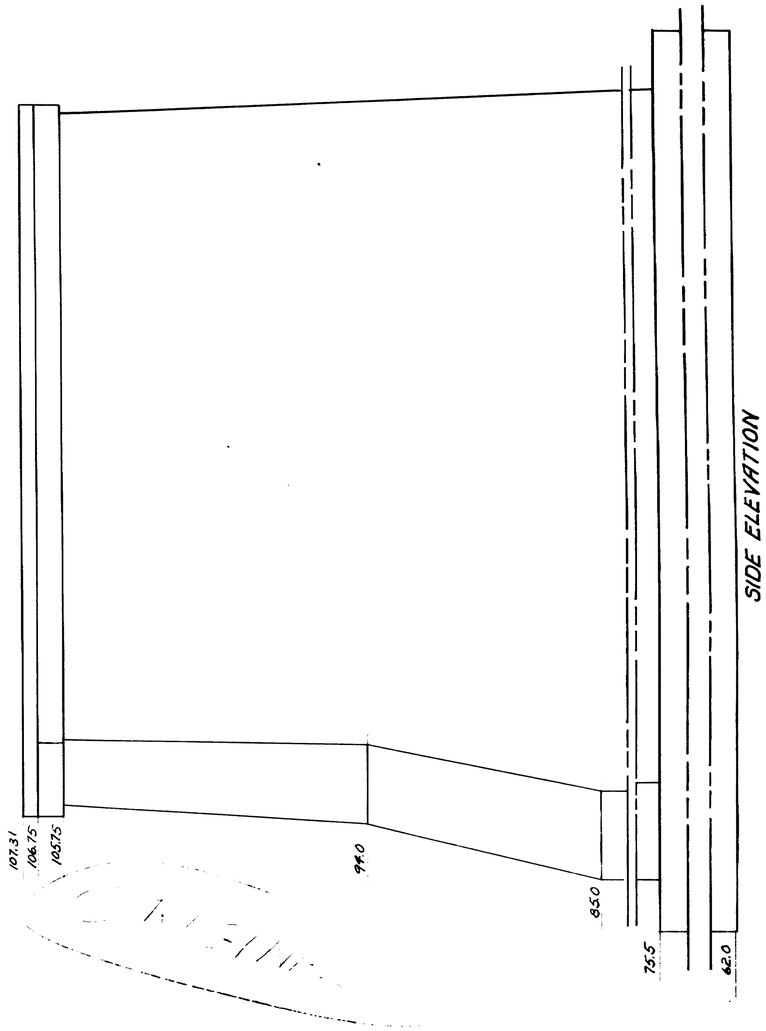

SIDE ELEVATION

Note: Seal to be placed in one continuous run. Construction joints to be thoroughly cleaned and coated with neat cement before next course is placed.

Revised 10/23/10
Conduit pipe added

DIRECTORS OF THE MAINE KENNEBEC BRIDGE

MAINE KENNEBEC BRIDGE
OVER
KENNEBEC RIVER
BETWEEN THE TOWNS OF
RICHMOND, SAGADAHOC CO.
AND
DRESDEN, LINCOLN CO.
PIER NO 4

SHEET 7 of 24 AUGUSTA ME. MARCH 31, 30

13-7

0 1 2 3 4 5 INCHES

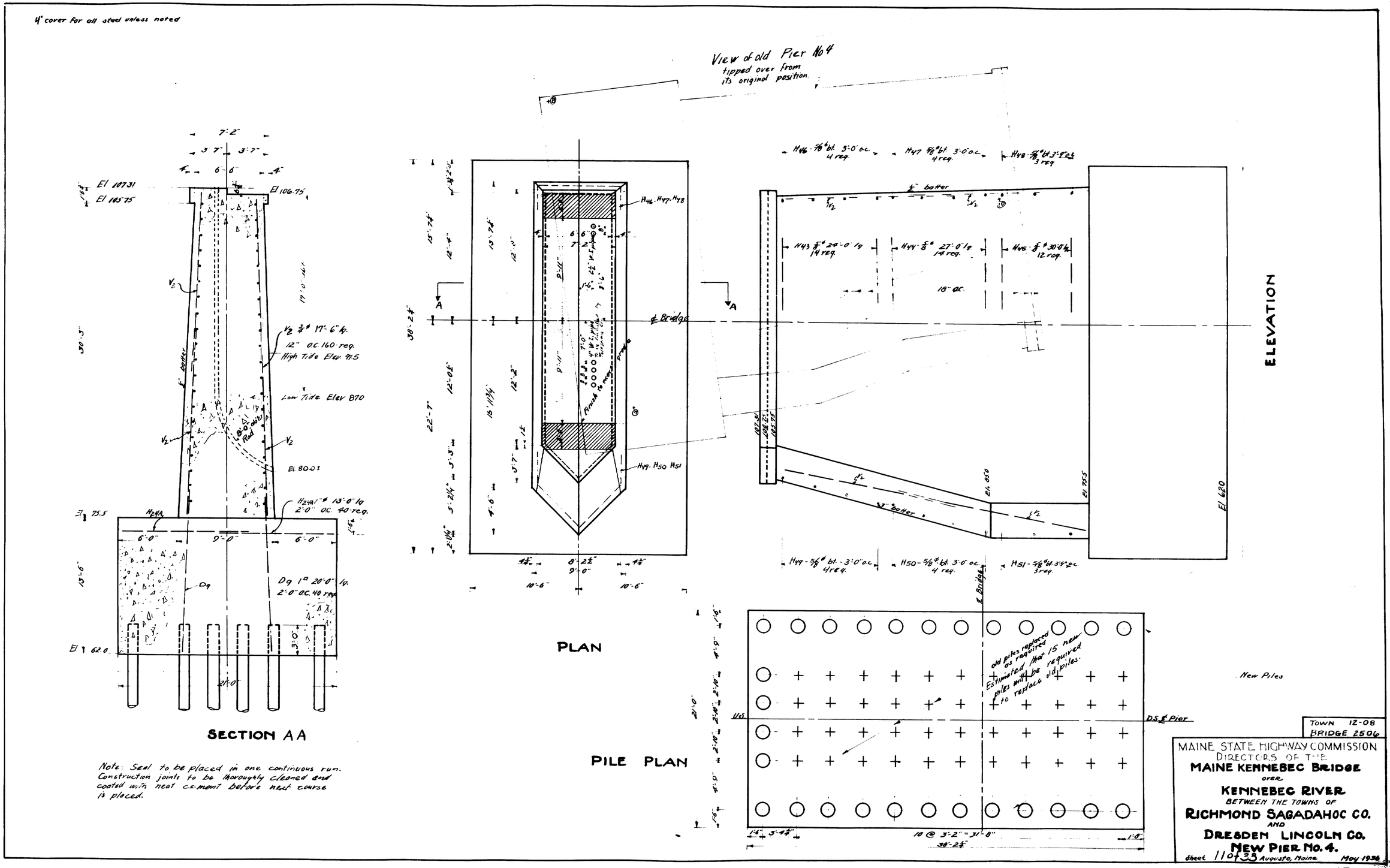
4" cover for all steel unless noted
View of old Pier No 4
tipped over from
its original position.
SECTION AA
PLAN
PILE PLAN
ELEVATION
Note: Seal to be placed in one continuous run. Construction joints to be thoroughly cleaned and coated with neat cement before next course is placed.
old piles replaced as required
Estimated that 15 new piles will be required to replace old piles.
New Piles
TOWN 12-08
BRIDGE 2506
MAINE STATE HIGHWAY COMMISSION
DIRECTORS OF THE
MAINE KENNEBEC BRIDGE
OVER
KENNEBEC RIVER
BETWEEN THE TOWNS OF
RICHMOND SAGADAHOC CO.
AND
DRESDEN LINCOLN CO.
NEW PIER No. 4.
Sheet 11 of 33 Augusta, Maine May 1936
13-19
Plan E.A.M.
Traced CTS
Checked

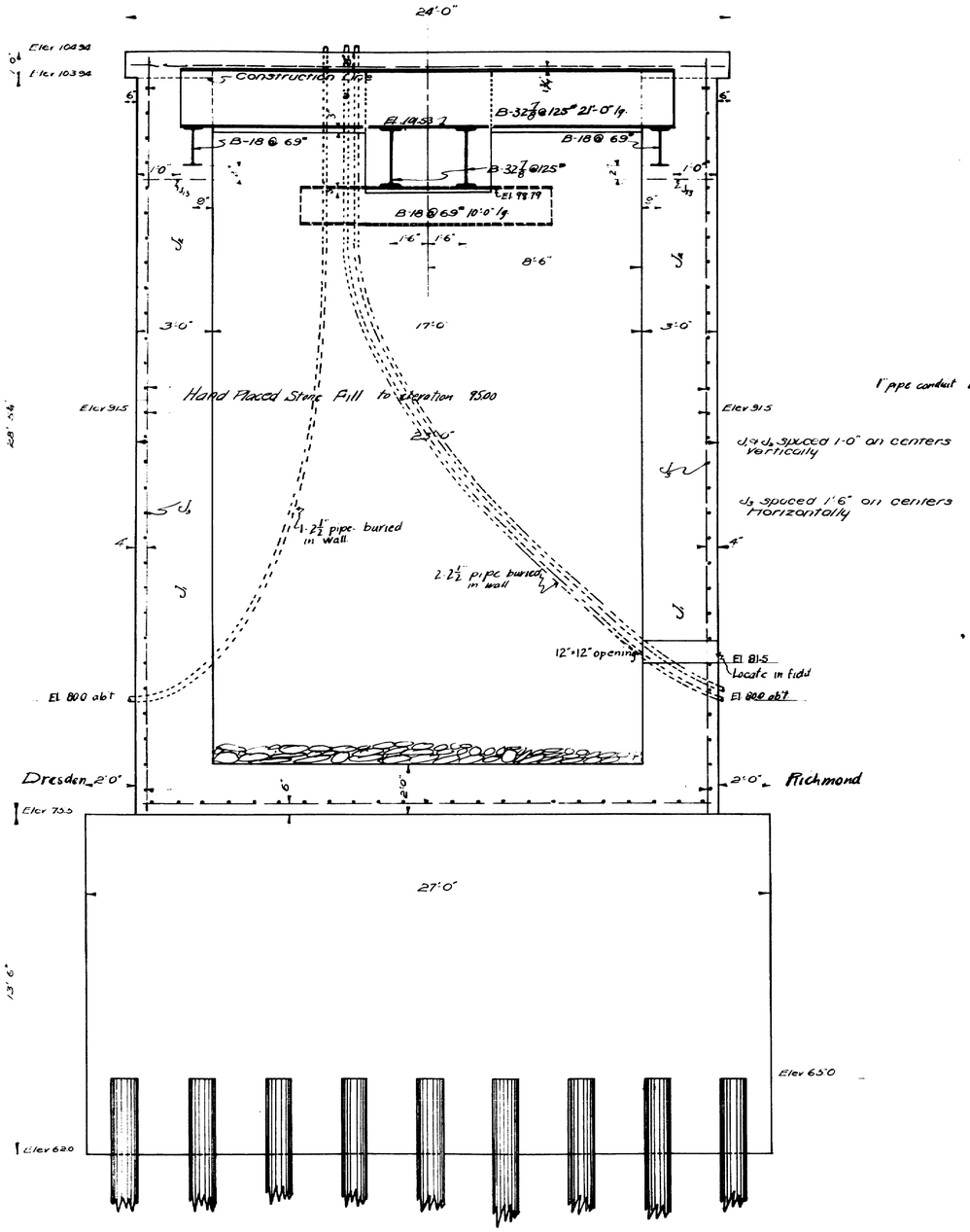

SECTION AA

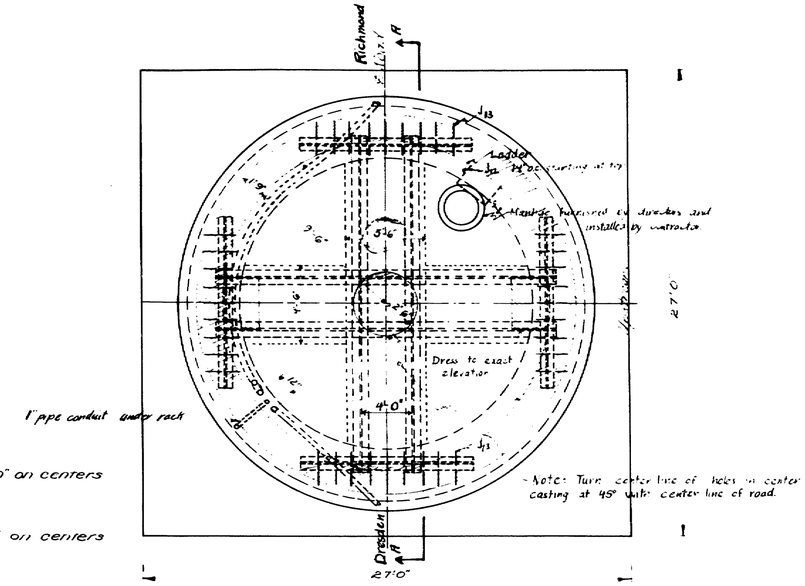

TOP VIEW

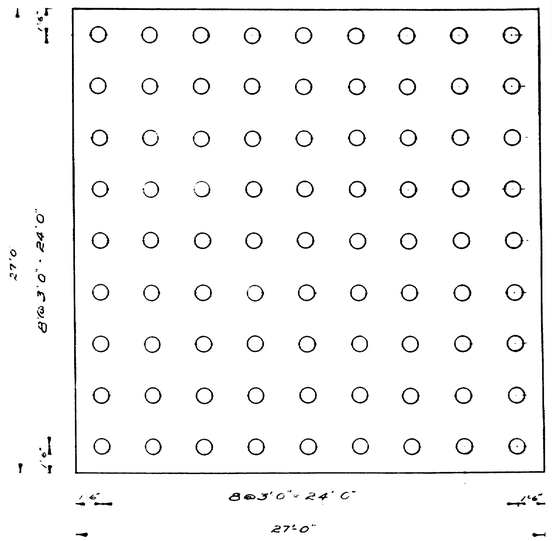

PILE LAYOUT

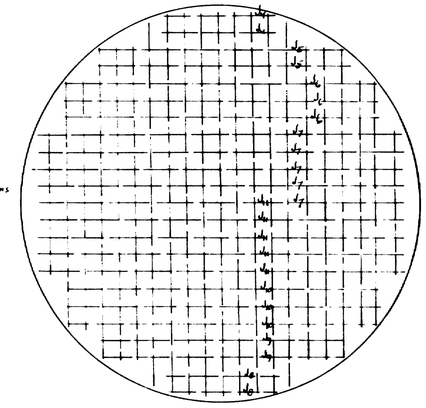

SLAB
STEEL PLAN
J_4-J_7 Footing J_8-J_{11} Top slab
Symmetrical ab't ℄'s

Steel at 1'-0" cts in both directions
Cut steel for man hole
J_{14} extra steel around manhole.

STEEL SCHEDULE

Mark	Size	No	Length	Remarks
J_1	7/8 ϕ	48	26'-6"	radius 11'-0"
J_2	3/4 ϕ	39	26'-6"	" 11'-0"
J_3	1/2 ϕ	46	29'-0"	straight
J_4	7/8 ϕ	8	6'-0"	"
J_5	7/8 ϕ	8	14'-0"	"
J_6	7/8 ϕ	12	18'-0"	"
J_7	7/8 ϕ	18	21'-0"	"
J_8	5/8 ϕ	8	7'-0"	"
J_9	5/8 ϕ	8	15'-0"	"
J_{10}	5/8 ϕ	12	19'-0"	"
J_{11}	5/8 ϕ	18	22'-0"	"
J_{12}	3/4 ϕ	13	4'-2"	18" 1/16"
J_{13}	7/8 ϕ	36	2'-6"	straight
J_{14}	5/8 ϕ	8	5'-0"	Extra steel around manhole

ORIGINAL

Note: Seal to be placed in one continuous run. Construction joints to be thoroughly cleaned and coated with neat cement before next course is placed.

Revised 12/1/30 Conduit pipe added
C. to C. top beams added

DIRECTORS OF THE MAINE KENNEBEC BRIDGE

MAINE KENNEBEC BRIDGE
OVER
KENNEBEC RIVER
BETWEEN THE TOWNS OF
RICHMOND SAGADAHOC CO.
AND
DRESDEN LINCOLN CO.
PIER No 5.
SHEET 8 of AUGUSTA, ME. MARCH 29, 30

12 of 33.

0 1 2 3 4 5 INCHES

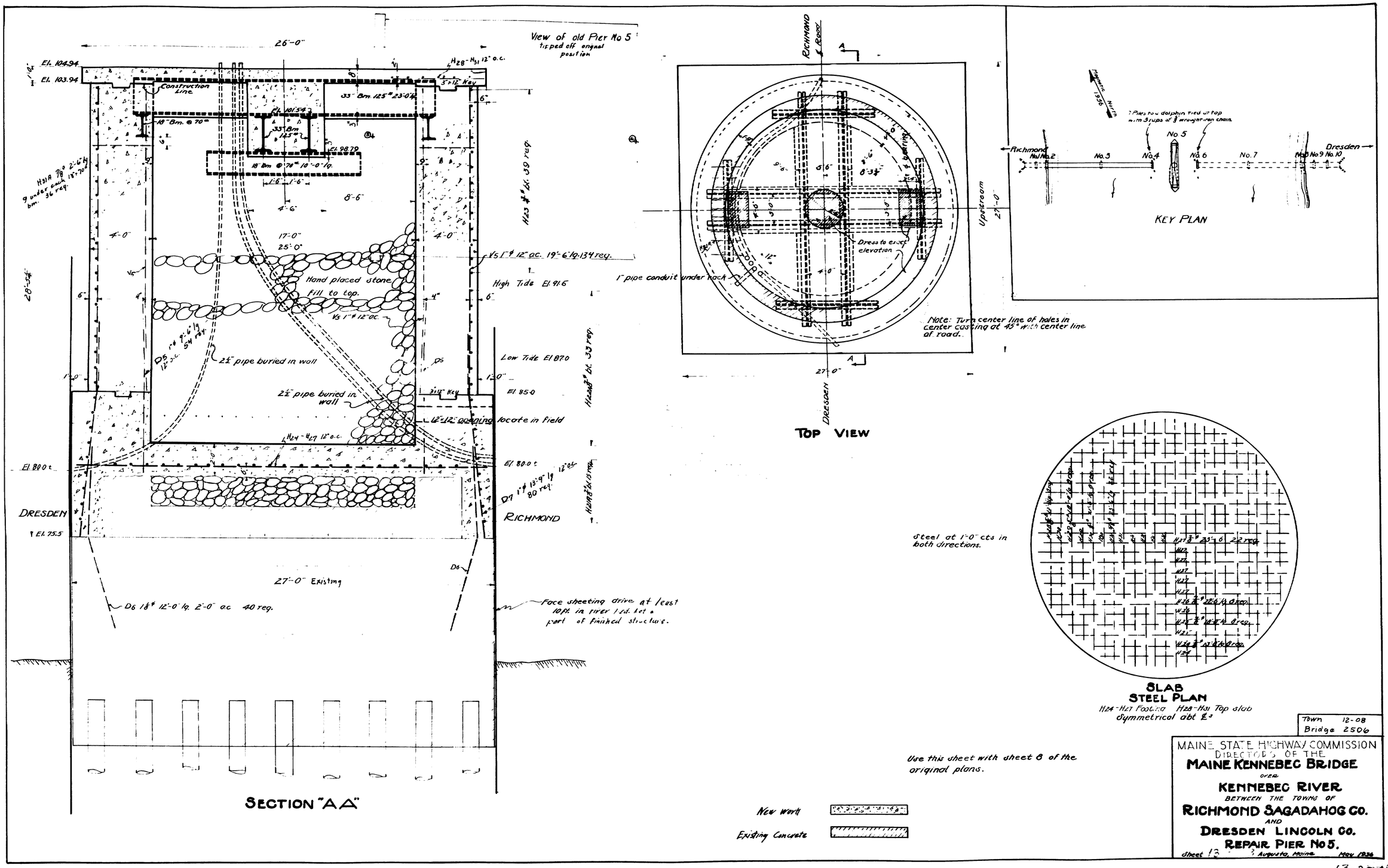

Town 12-08
Bridge 2506

MAINE STATE HIGHWAY COMMISSION
DIRECTORS OF THE
MAINE KENNEBEC BRIDGE
OVER
KENNEBEC RIVER
BETWEEN THE TOWNS OF
RICHMOND SAGADAHOG CO.
AND
DRESDEN LINCOLN CO.
REPAIR PIER No 5.
Sheet 13 Augusta, Maine May 1936

13-20A

Plan E.A.M.
Traced C.T.S.
Checked

0 1 2 3 4 5 INCHES

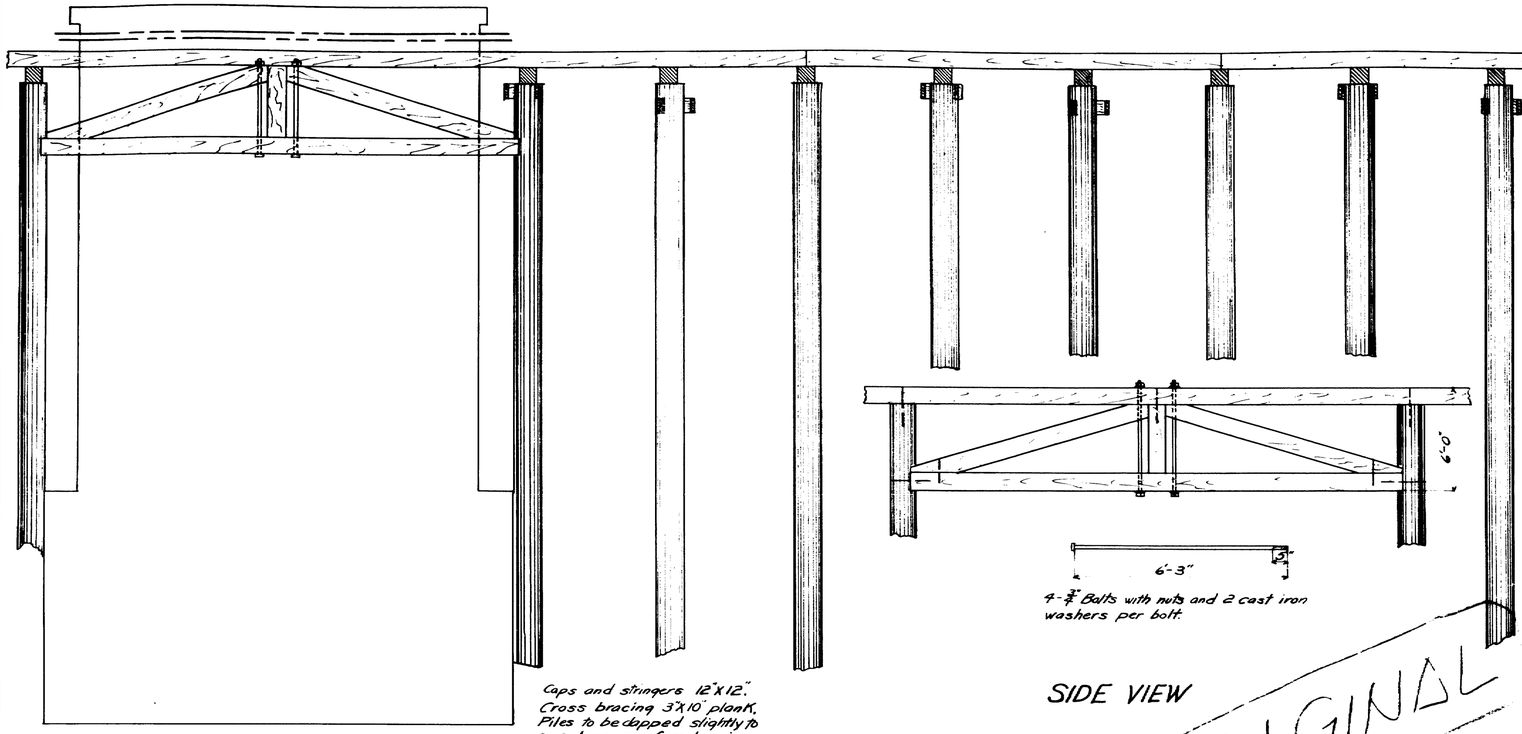

Caps and stringers 12"x12".
Cross bracing 3"x10" plank.
Piles to be dapped slightly to give bracing a firm bearing.

6'-3"

4-¾" Bolts with nuts and 2 cast iron washers per bolt.

SIDE VIEW

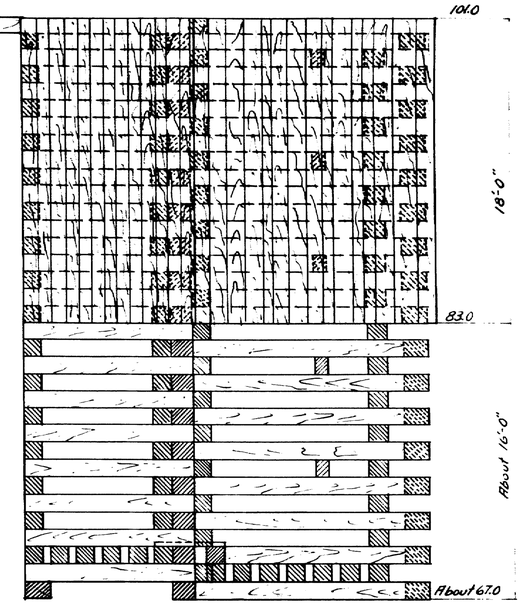

Timber in nose 12"x12".
3" Planking on sides.
⅞" drift pins 2'-0" long.
Two pins to a joint.

Note: Nose to be stone filled

ORIGINAL

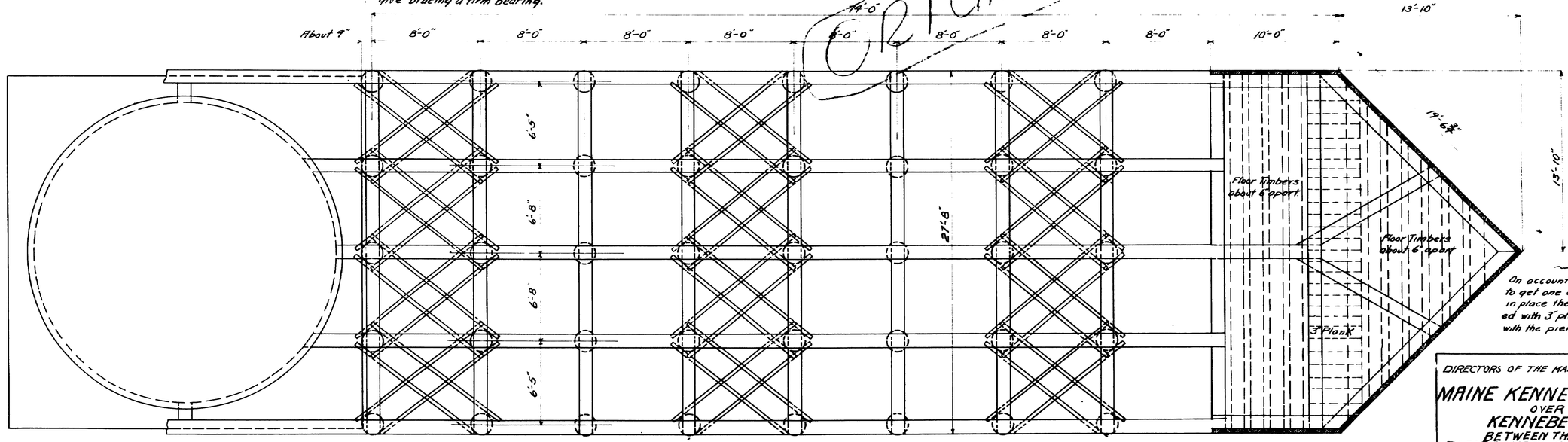

TOP VIEW

~Note~
On account of not being able to get one of the floor timbers in place the opening will be covered with 3" planking laid parallel with the pier.

FENDER PIERS ARE SYMMETRICAL

R.B.P.
C.L.P.

DIRECTORS OF THE MAINE KENNEBEC BRIDGE

MAINE KENNEBEC BRIDGE
OVER
KENNEBEC RIVER
BETWEEN THE TOWNS OF
RICHMOND SAGADAHOC CO.
AND
DRESDEN LINCOLN CO.

FENDER PIERS

SHEET [redacted] AUGUSTA, ME. MARCH 3[redacted]

[redacted]

0 1 2 3 4 5 INCHES

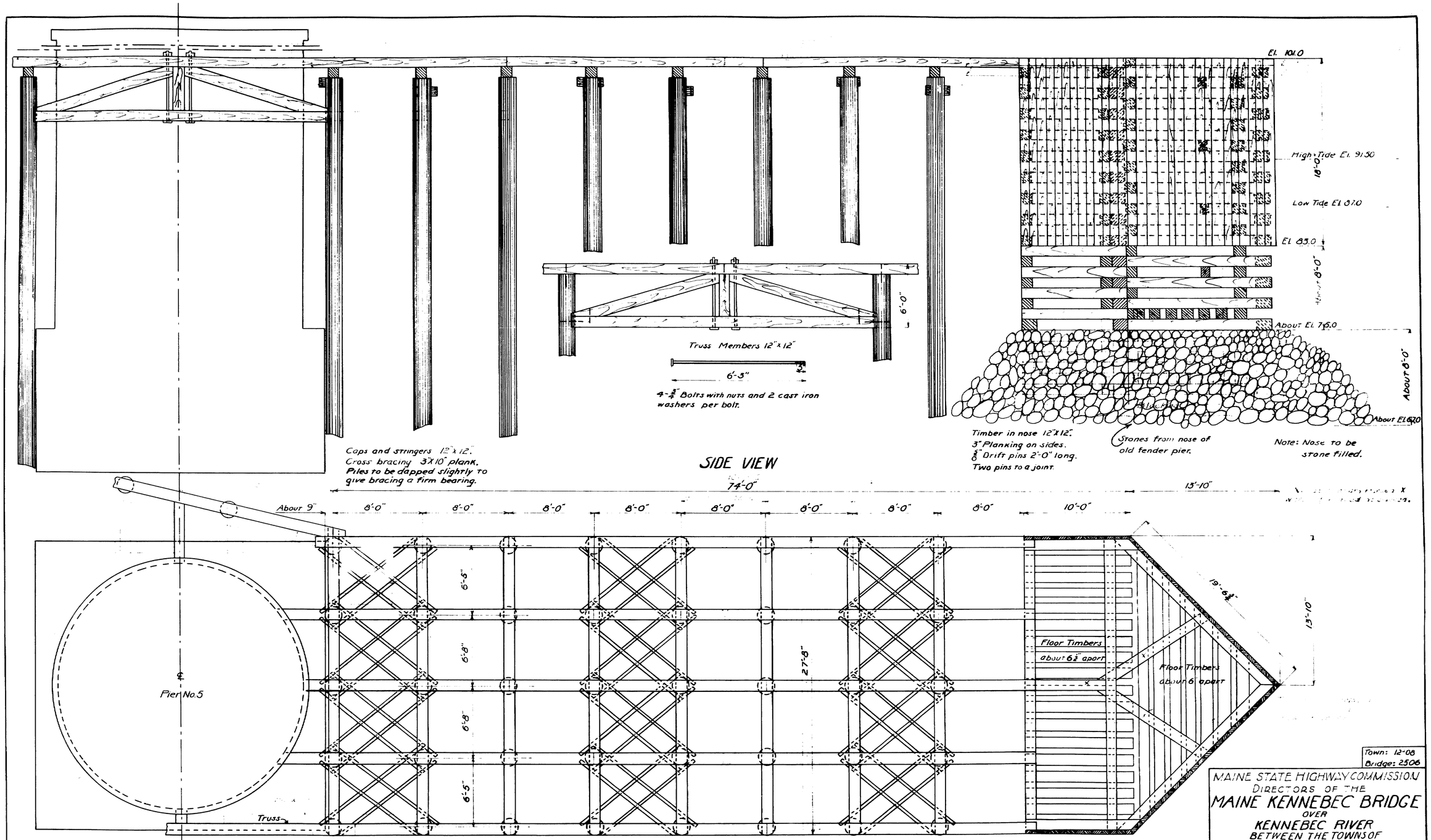
Caps and stringers 12"x12".
Cross bracing 3"x10" plank.
Piles to be dapped slightly to give bracing a firm bearing.
Truss Members 12"x12"
6'-3"
4-3/4" Bolts with nuts and 2 cast iron washers per bolt.
6'-0"
SIDE VIEW
74'-0"
13'-10"
El. 101.0
High Tide El. 91.50
10'-0"
Low Tide El. 81.0
El. 83.0
8'-0"
About El. 76.0
About 8'-0"
About El. 67.0
Timber in nose 12"x12".
3" Planking on sides.
3/4" Drift pins 2'-0" long.
Two pins to a joint.
Stones from nose of old fender pier.
Note: Nose to be stone filled.
About 9"
8'-0"
10'-0"
Pier No. 5
6'-5"
6'-8"
27'-8"
Truss
Floor Timbers about 6" apart
Floor Timbers about 6" apart
19'-6 3/4"
13'-10"
TOP VIEW
Plan by J.A.W.
Traced by J.A.W.
Checked by [illegible]
Town: 12-08
Bridge: 2506
MAINE STATE HIGHWAY COMMISSION
DIRECTORS OF THE
MAINE KENNEBEC BRIDGE
OVER
KENNEBEC RIVER
BETWEEN THE TOWNS OF
RICHMOND & SAGADAHOC CO.
AND
DRESDEN — LINCOLN CO.
UPSTREAM FENDER PIER
Sheet 15 of 33 AUGUSTA, ME. July 6, '36
13-21 A
0 1 2 3 4 5 INCHES

El 1010

18'-0"

El 830

New structure.

Existing structure.

About 16'-0"

About El 670

Note: Nose to be stone filled.

Existing structure

Timber in nose 12"x12".
3" Planking on sides.
⅞" Drift pins 2'-0" long.
Two pins to a joint.

For Truss Details See Sheet No. 9A

Clear channel 61'-0"

Piles to be dapped slightly to give bracing a firm bearing.
Caps and stringers 12"x12".
Cross bracing 3"x10" plank.

SIDE VIEW

13'-10"

10'-0" 8'-0" 8'-0" 8'-0" 8'-0" 8'-0" 8'-0" 8'-0" 8'-0" 8'-0" About 9"

14'-0"

7'-9"

2'-0"

13'-10"

13'-6¼"

6'-5"

6'-0"

6'-8"

6'-5"

27'-0"

Outline of existing Pier No.5

℄ Pier No.5

TOP VIEW

Channel clear 69'-0"

Traced by J.A.W.
Checked by W.P.B.

Town: 12-08
Bridge: 2506

MAINE STATE HIGHWAY COMMISSION
DIRECTORS OF THE
MAINE KENNEBEC BRIDGE
OVER
KENNEBEC RIVER
BETWEEN THE TOWNS OF
RICHMOND — SAGADAHOC CO.
AND
DRESDEN — LINCOLN CO.
DOWNSTREAM FENDER PIER
Sheet 16 of 33 AUGUSTA, ME. July 11, '36

13-21-B

0 1 2 3 4 5 INCHES

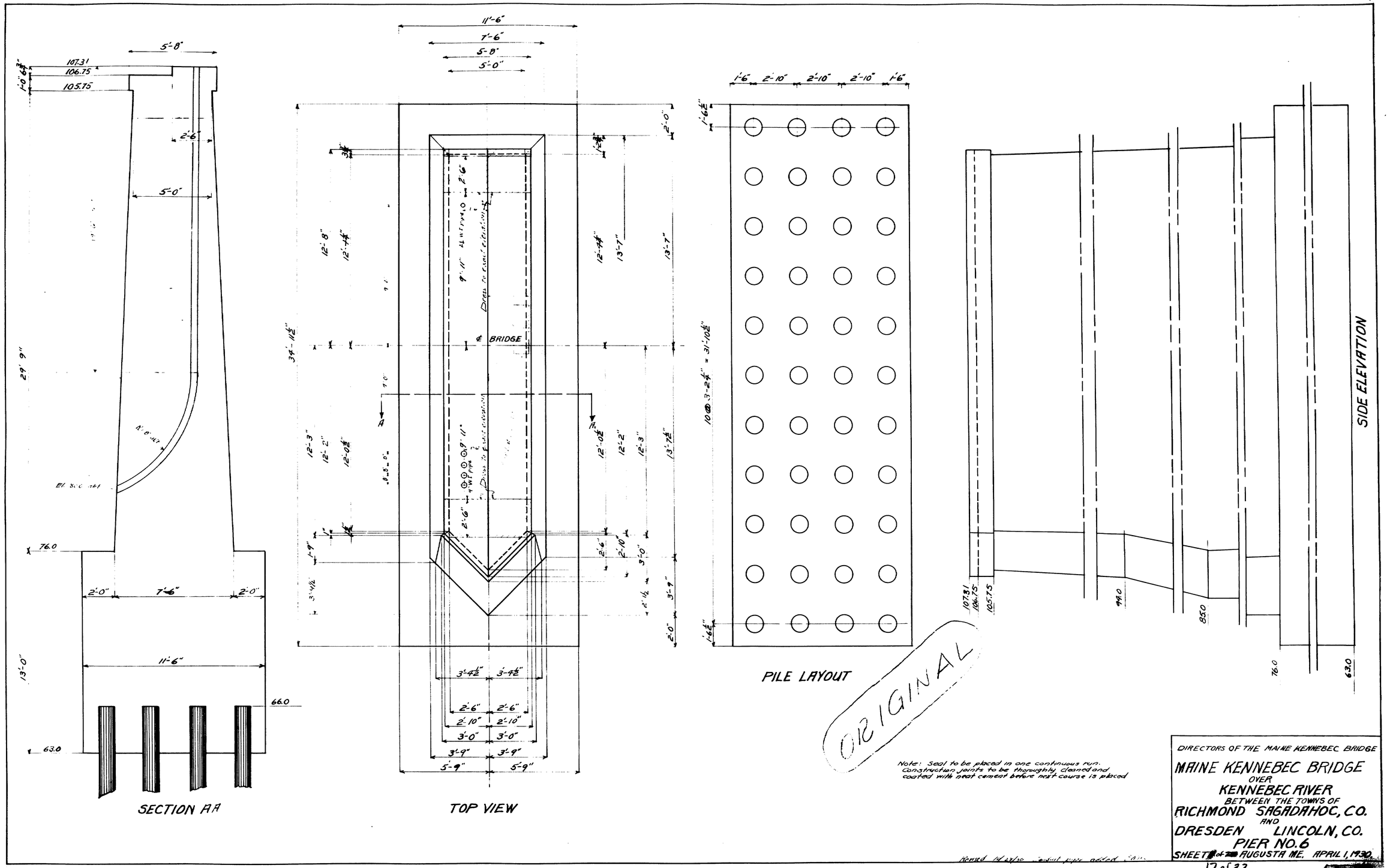

Note: Seal to be placed in one continuous run. Construction joints to be thoroughly cleaned and coated with neat cement before next course is placed

DIRECTORS OF THE MAINE KENNEBEC BRIDGE

MAINE KENNEBEC BRIDGE
OVER
KENNEBEC RIVER
BETWEEN THE TOWNS OF
RICHMOND SAGADAHOC, CO.
AND
DRESDEN LINCOLN, CO.
PIER NO. 6
SHEET [redacted] of [redacted] AUGUSTA ME. APRIL 1, 1930.

17 of 33

A.B.P.
I.C.L.P.

0 1 2 3 4 5 INCHES

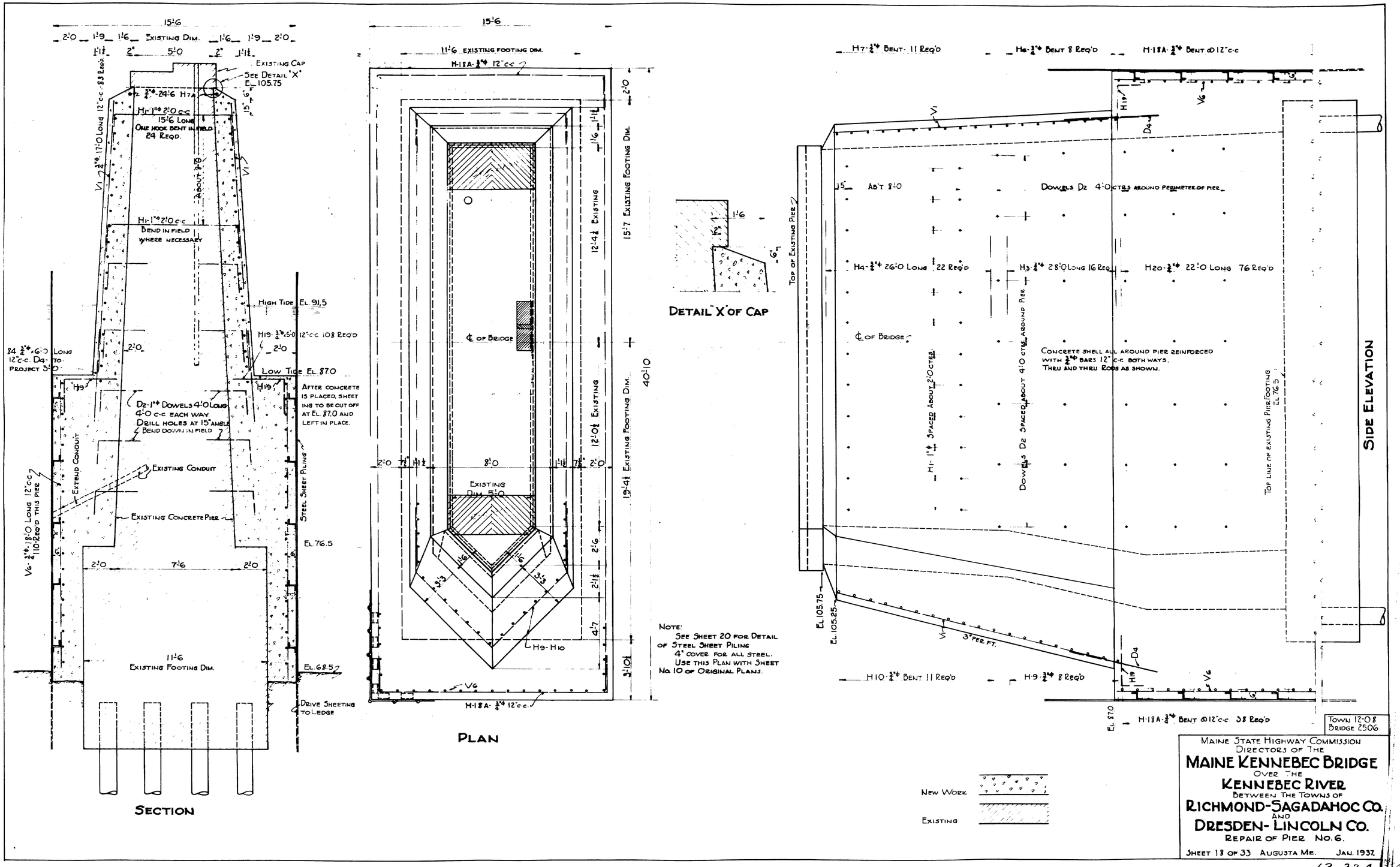

15'-6
2'-0 1'-9 1'-6 Existing Dim. 1'-6 1'-9 2'-0
Existing Cap
See Detail "X" El. 105.75
H1-1"φ 2'-0 c-c 15'-6 Long One hook bent in field 24 Req'd.
V1 3/4"φ 17'-0 Long 12" c-c 83 Req'd
About 8'-0
H1-1"φ 2'-0 c-c Bend in field where necessary
High Tide El. 91.5
H19-3/4"φ 5'-0 12" c-c 108 Req'd
84 3/4"φ 6'-0 Long 12" c-c. D4 to project 3'-0
Low Tide El. 87.0
After concrete is placed, sheeting to be cut off at El. 87.0 and left in place.
D2-1"φ Dowels 4'-0 Long 4'-0 c-c each way. Drill holes at 15° angle. Bend down in field
Extend Conduit
Existing Conduit
Steel Sheet Piling
Existing Concrete Pier
V6-3/4"φ 18'-0 Long 12" c-c 110 Req'd this pier
El. 76.5
2'-0 7'-6 2'-0
11'-6 Existing Footing Dim.
El. 68.5
Drive Sheeting to Ledge
Section
15'-6
11'-6 Existing Footing Dim.
H-18A-3/4"φ 12" c-c
15'-7 Existing Footing Dim.
12'-4 1/2 Existing
12'-0 1/2 Existing
19'-4 1/2 Existing Footing Dim.
40'-10
℄ of Bridge
Existing Dim. 5'-0
8'-0
H9-H10
V6
H-18A-3/4"φ 12" c-c
Plan
Detail "X" of Cap
Note: See Sheet 20 for Detail of Steel Sheet Piling 4" cover for all steel. Use this Plan with Sheet No. 10 of Original Plans.
H7-3/4"φ Bent 11 Req'd
H6-3/4"φ Bent 8 Req'd
H-18A-3/4"φ Bent @ 12" c-c
Top of Existing Pier
Ab't 8'-0
Dowels D2 4'-0 ctrs around perimeter of pier
H4-3/4"φ 26'-0 Long 22 Req'd
H3-3/4"φ 28'-0 Long 16 Req'd
H20-3/4"φ 22'-0 Long 76 Req'd
℄ of Bridge
Concrete shell all around pier reinforced with 3/4"φ bars 12" c-c both ways. Thru and thru rods as shown.
H1-1"φ Spaced about 2'-0 ctrs.
Dowels D2 Spaced about 4'-0 ctrs around pier
Top line of existing pier footing El. 76.5
Side Elevation
El. 105.75
El. 105.25
3" per ft.
H10-3/4"φ Bent 11 Req'd
H9-3/4"φ 8 Req'd
El. 87.0
H-18A-3/4"φ Bent @ 12" c-c 38 Req'd
New Work
Existing
Town 12-08 Bridge 2506
Maine State Highway Commission
Directors of the
Maine Kennebec Bridge
Over the
Kennebec River
Between the Towns of
Richmond-Sagadahoc Co.
and
Dresden-Lincoln Co.
Repair of Pier No. 6.
Sheet 18 of 33 Augusta Me. Jan. 1937
13-22A
Plan I.R.
Check E.A.M.
0 1 2 3 4 5 Inches

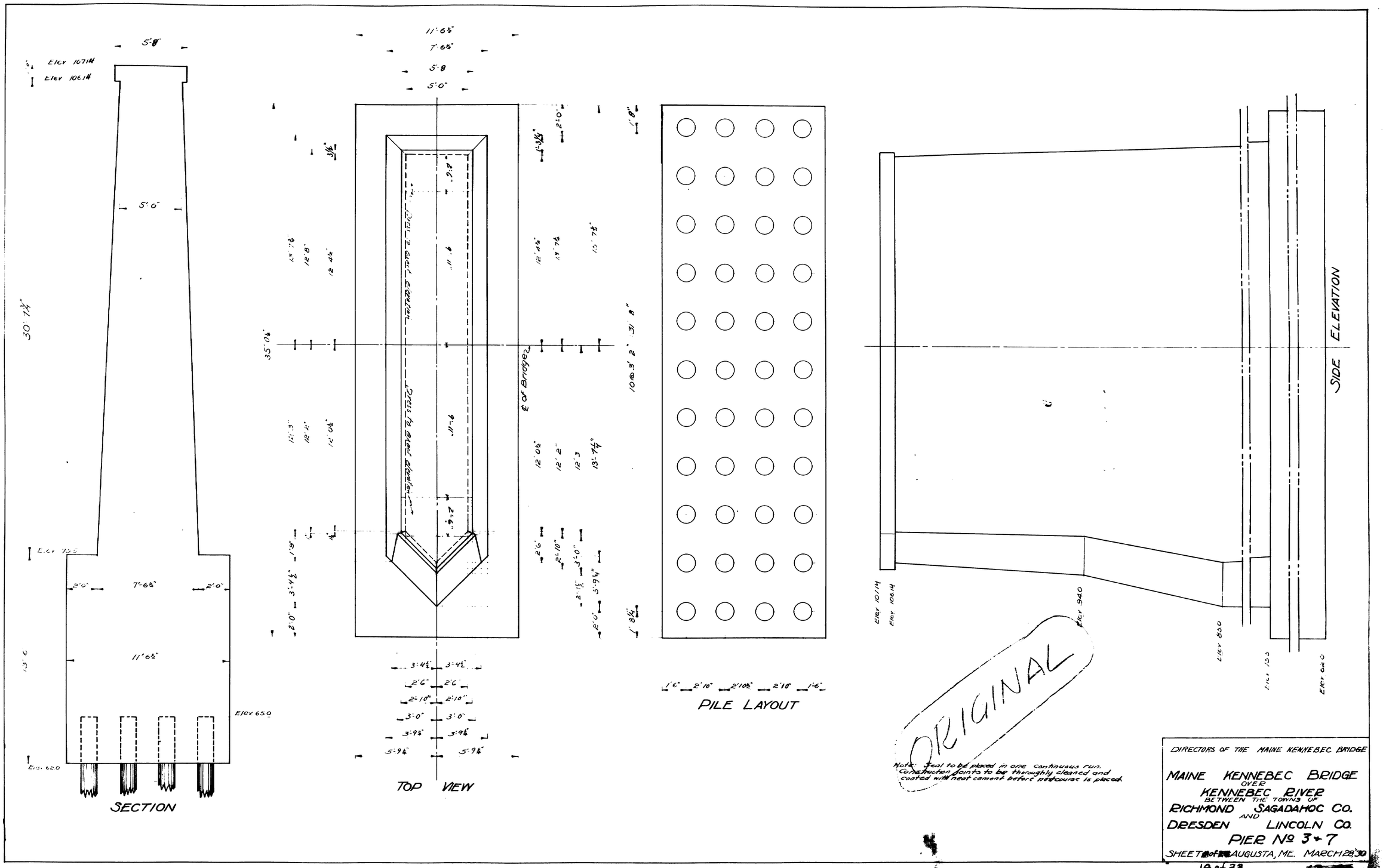
SECTION
TOP VIEW
PILE LAYOUT
SIDE ELEVATION
Elev 107.14
Elev 106.14
Elev 65.0
Elev 94.0
Elev 85.0
Elev 62.0
℄ of Bridge
ORIGINAL
Note: Seal to be placed in one continuous run. Construction joints to be thoroughly cleaned and coated with neat cement before next course is placed.
DIRECTORS OF THE MAINE KENNEBEC BRIDGE
MAINE KENNEBEC BRIDGE
OVER
KENNEBEC RIVER
BETWEEN THE TOWNS OF
RICHMOND SAGADAHOC CO.
AND
DRESDEN LINCOLN CO.
PIER No 3 + 7
SHEET 19 of 33 AUGUSTA, ME. MARCH 28 '30
19 of 33
ABP
HHP
LCLP
0 1 2 3 4 5 INCHES

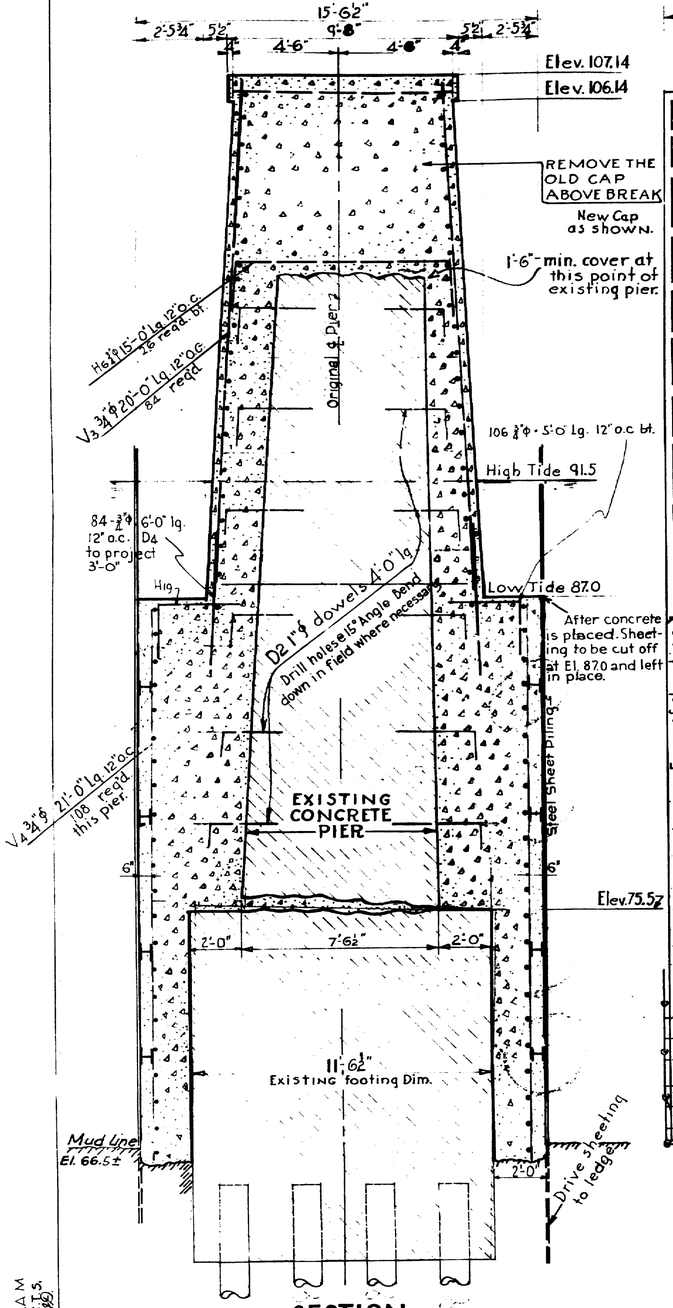

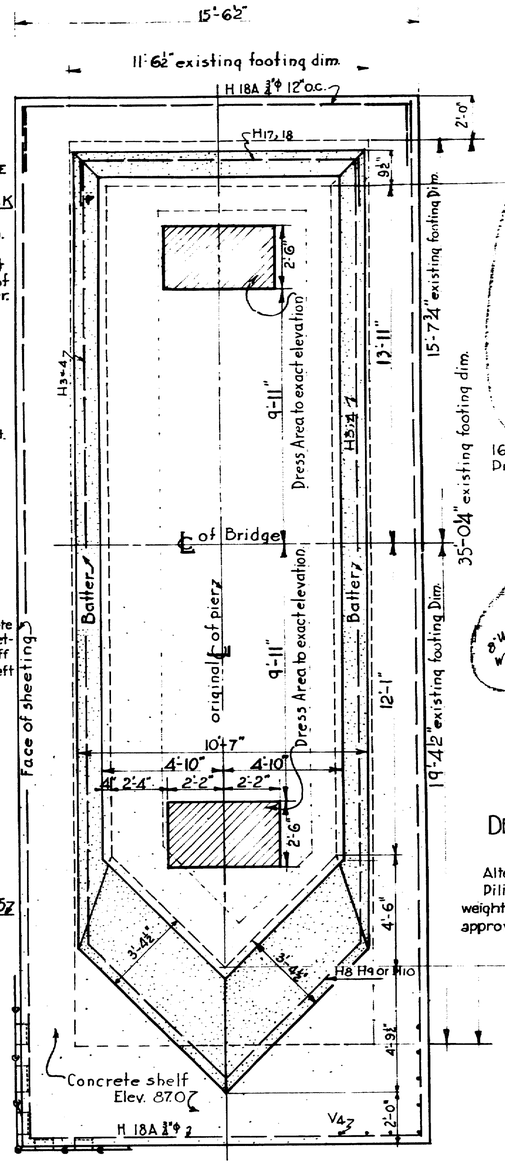

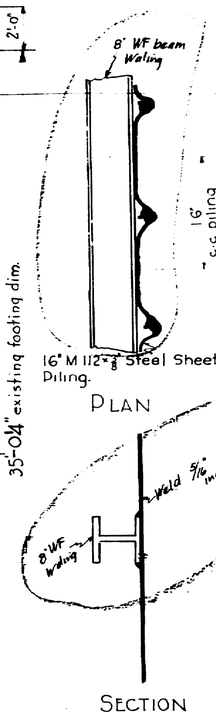

DETAIL OF STEEL SHEET PILING

Alternate types of Steel Sheet Piling with equal or greater weight per Sq. ft may be used if approved by the Engineer.

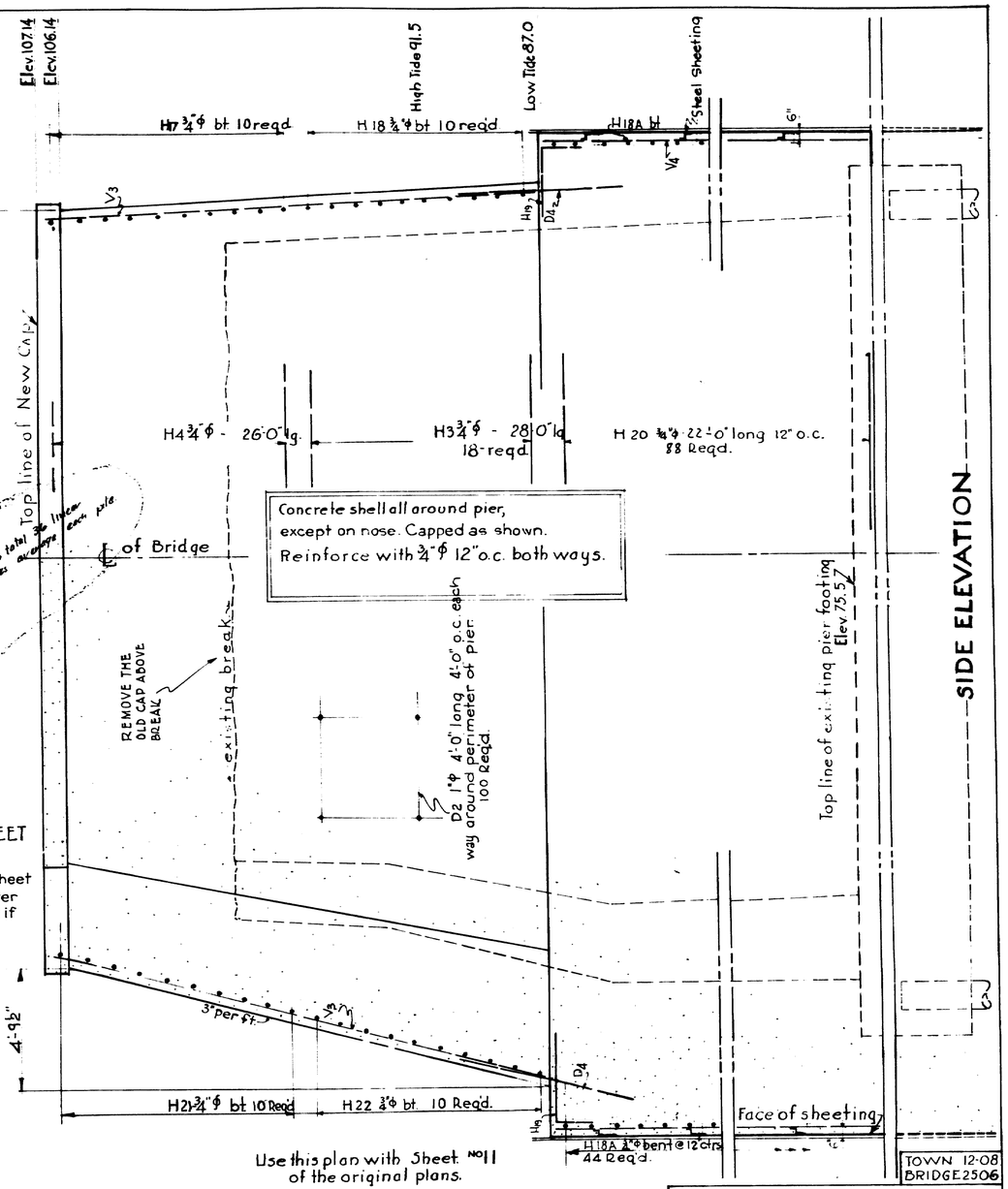

Use this plan with Sheet No 11 of the original plans.

NOTE:- 4"- cover for all Steel. unless otherwise noted.

New work

Existing Concrete

Revised 3/12/32 Waling added to sheet piling

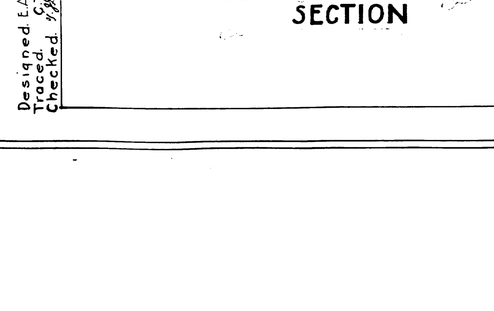

SECTION

TOP VIEW

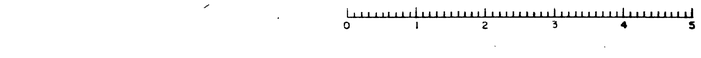

MAINE STATE HIGHWAY COMMISSION
DIRECTORS OF THE
MAINE KENNEBEC BRIDGE
OVER THE
KENNEBEC RIVER
BETWEEN THE TOWNS OF
RICHMOND SAGADAHOC CO.
AND
DRESDEN LINCOLN CO.
REPAIR OF PIER NO 7
SHEET 2 OF 3 SHEETS AUGUSTA, ME. MAY 1930

TOWN 12-08
BRIDGE 2506

13-23A

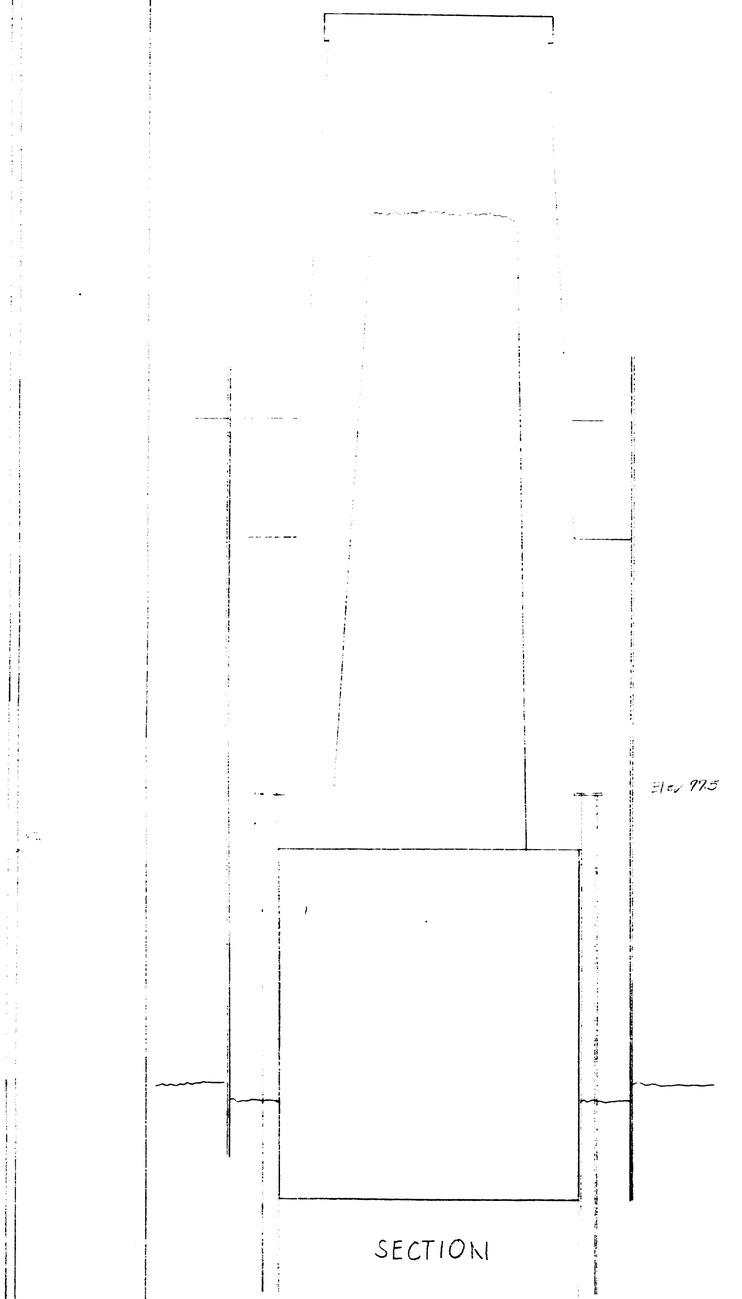

SECTION

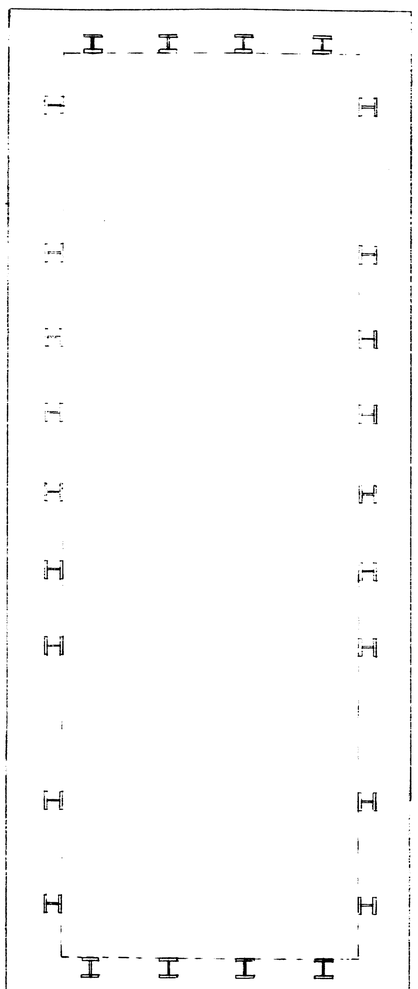

TOP VIEW

RICHMOND

Subway

Steel Bearing Piles 8"·8"·36# Req. 24
Cap 10'·¾"·0'-10" Weld to pile after cutoff
Note: [illegible]

Maine Kennebec Br.
13-23B

0 1 2 3 4 5 INCHES

REINFORCEMENT SCHEDULE

STRAIGHT STEEL
SUBSTRUCTURE

MARK	SIZE	NO.	LENGTH	LOCATION
V7	5/8"	69	13'-0"	PIER NO.1
H33	5/8"	6	21'-0"	
H36	5/8"	6	22'-10"	
H34	5/8"	10	24'-8"	
H35	5/8"	10	33'-6"	
V7A	5/8"	18	6'-0"	
V2	3/4"	160	17'-6"	PIERS NO.2 & 8
H4	3/4"	36	26'-0"	
H7A	3/4"	4	24'-6"	
H12	3/4"	36	27'-0"	
D2	1"	72	4'-0"	
D3	3/4"	16	4'-0"	
V2	3/4"	320	17'-6"	PIERS NO. 3 & 4
D9	1" ϕ	80	20'-0"	
H24A	1"	80	13'-0"	
H43	5/8"	28	24'-0"	
H44	5/8"	28	27'-0"	
H45	5/8"	24	30'-0"	
H24	7/8"	8	13'-0"	PIER NO.5
H25	7/8"	8	18'-0"	
H26	7/8"	8	22'-6"	
H27	7/8"	22	23'-6"	
H28	7/8"	8	13'-0"	
H29	7/8"	8	18'-0"	
H30	7/8"	8	21'-6"	
H31	7/8"	22	23'-6"	
H31A	7/8"	36	2'-6"	
V5	1"	134	19'-6"	
D5	1"	54	9'-6"	
D7	1"	80	13'-9"	
D6	1 1/8"	40	12'-0"	
V1	3/4"	83	17'-0"	PIER NO.6
H2	3/4"	18	29'-0"	
H3	3/4"	16	28'-0"	
H4	3/4"	22	26'-0"	
H7A	3/4"	2	24'-6"	
D2	1"	100	4'-0"	
V6	3/4"	110	18'-0	
D8	3/4" ϕ	83	6'-0	
H20	3/4" ϕ	76	22'-0	
H4	3/4"	20	26'-0"	PIER NO.7
H3	3/4"	20	28'-0"	
H20	3/4"	88	22'-0	
D2	1"	100	4'-0"	
V3	3/4"	84	20'-0"	
D4	3/4"	84	6'-0"	
V4	3/4"	108	21'-0"	

BENT STEEL
SUBSTRUCTURE

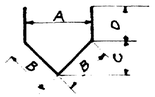

MARK	SIZE	NO.	LENGTH	A	B	C	D	LOCATION
H40	5/8"	2	9'-0"	2'-10"	2'-0"	1'-5"	2'-6"	PIER NO.1
H41	5/8"	2	11'-2"	4'-4"	3'-1"	2'-2"	2'-6"	
H42	5/8"	2	13'-5"	5'-10"	4'-1½"	2'-11"	2'-6"	
H54	5/8"	2	15'-5"	7'-4"	5'-2"	3'-0"	2'-6"	
H55	5/8"	2	17'-6"	8'-10"	6'-3"	4'-5"	2'-6"	
H15	3/4"	18	16'-2"	7'-3"	5'-1"	3'-1½"	3'-0"	PIERS NO.2 & 8
H16	3/4"	18	15'-2	6'-6"	4'-7"	3'-3"	3'-0"	do.
H49	5/8"	8	13'-6"	6'-0"	4'-3"	3'-0"	2'-6"	PIERS NO.3 & 4
H50	5/8"	8	14'-10"	7'-0"	4'-11"	3'-6"	2'-6"	
H51	5/8"	6	16'-4"	8'-0"	5'-8"	4'-0"	2'-6"	
H9	3/4"	8	18'-8"	9'-0"	6'-4"	4'-6"	3'-0"	PIER NO.6
H10	3/4"	11	16'-8"	7'-6"	5'-4"	3'-9"	3'-0"	
H21	3/4"	10	18'-0"	8'-6"	6'-0"	4'-3"	3'-0"	PIER NO.7
H22	3/4"	10	19'-8"	9'-6"	6'-10"	4'-9"	3'-0"	do.

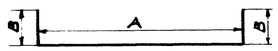

MARK	SIZE	NO.	LENGTH	A	B	LOCATION
H36	5/8"	10	16'-4"	11'-4"	2'-6"	PIER NO.1
H37	5/8"	2	7'-10"	2'-10"	2'-6"	
H38	5/8"	2	9'-4"	4'-4"	2'-6"	
H39	5/8"	2	10'-10"	5'-10"	2'-6"	
H52	5/8"	2	12'-4"	7'-4"	2'-6"	
H53	5/8"	2	13'-10"	8'-10"	2'-6"	
H13	3/4"	18	13'-3"	7'-3"	3'-0"	PIERS NO.2 & 8
H14	3/4"	18	12'-6"	6'-6"	3'-0"	do.
H46	5/8"	8	11'-0"	6'-0"	2'-6"	PIERS NO.3 & 4
H47	5/8"	8	12'-0"	7'-0"	2'-6"	
H48	5/8"	6	13'-0"	8'-0"	2'-6"	
H6	3/4"	8	15'-0"	9'-0"	3'-0"	PIER NO.6.
H7	3/4"	11	13'-6"	7'-6"	3'-0"	
H18A	3/4" ϕ	88	20'-6	14'-6	3'-0	
H6	3/4"	26	15'-0"	9'-0"	3'-0"	PIER NO.7
H17	3/4"	10	14'-6"	8'-6	3'-0"	
H18	3/4"	10	15'-6"	9'-6"	3'-0"	
H18A	3/4"	44	20'-6"	14'-6"	3'-0"	

BENT STEEL
SUBSTRUCTURE

MARK	SIZE	NO.	LENGTH	A	B	LOCATION
H11	1"	52	14'-6"	10'-6"	4'-0"	PIERS NO.2 & 8
H1	1"	24	15'-6"	13'-6	2'-0	PIER NO.6
H19	3/4"	214	5'-0"	3'-0"	2'-0"	PIER NO.7 & NO.6

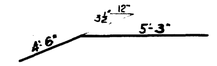

D8	5/8"	69	9'-9"		PIER NO.1

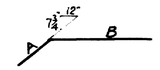

D10	1"	74	7'-0"	3'-0"	4'-0"	PIERS NO.2 & 8
D1	1"	41	8'-0"	4'-0"	4'-0"	PIER NO.6

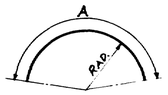

MARK	SIZE	NO	A	RADIUS	LOCATION
H22A	7/8"	35	28'-6"	12'-0"	PIER NO.5
H23	3/4"	39	28'-0"	12'-0"	
H21A	7/8"	15	30'-9"	13'-0"	

Note! All bars are to be plain round unless shown otherwise. Dimensions are to centers of bars.

Drawn By T.J.P.
Checked M.C.L.

TOWN 12-08
BRIDGE 2506

MAINE STATE HIGHWAY COMMISSION
DIRECTORS OF THE
MAINE KENNEBEC BRIDGE
OVER THE
KENNEBEC RIVER
BETWEEN THE TOWN OF
RICHMOND SAGADAHOC CO.
AND
DRESDEN LINCOLN CO.
REINFORCING STEEL
SHEET 21 of 23 AUGUSTA ME. JULY 23, 1936

13-23C

0 1 2 3 4 5 INCHES

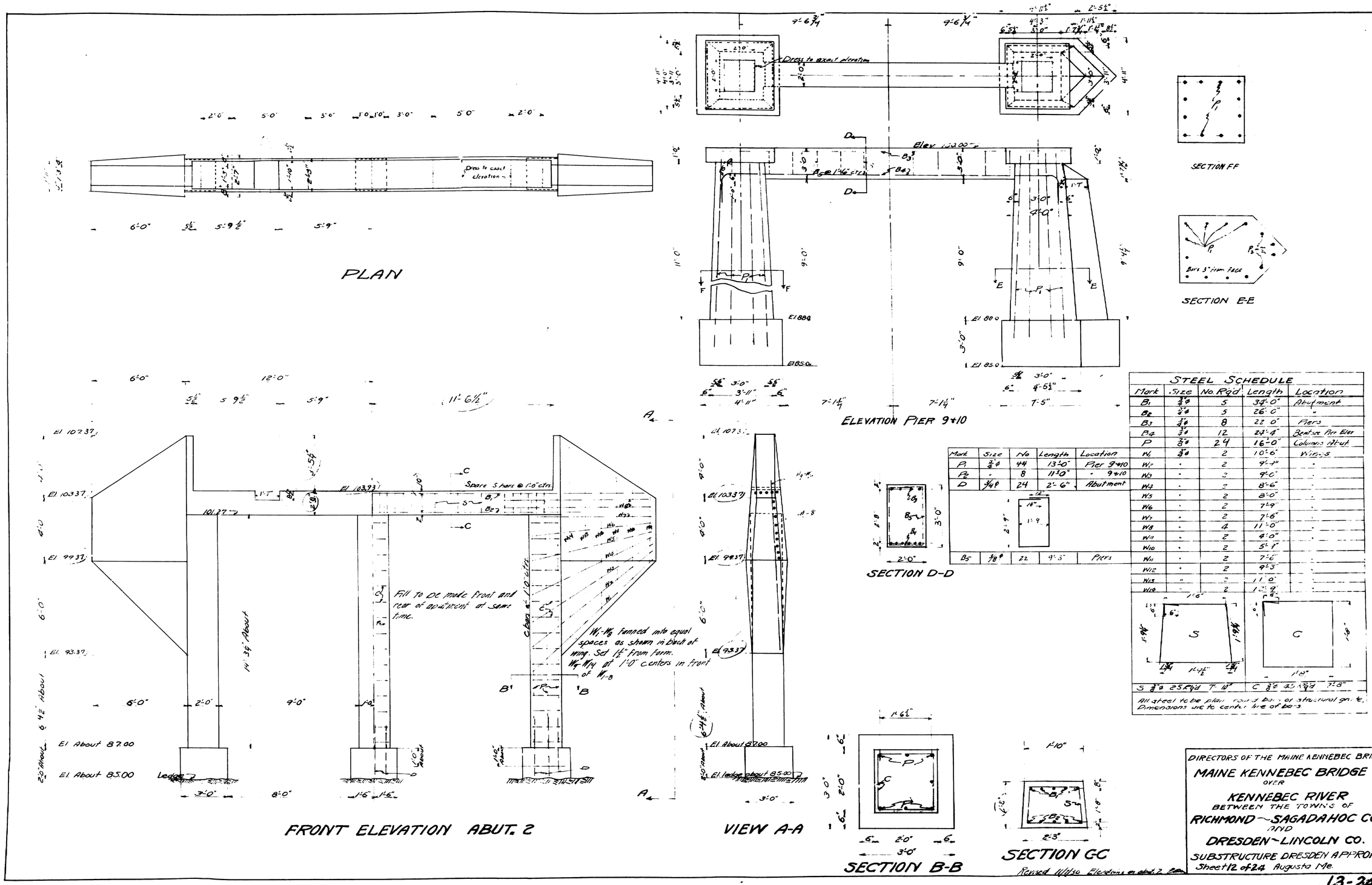

STEEL SCHEDULE				
Mark	Size	No. Req'd	Length	Location
B1	¾"φ	5	34'-0"	Abutment
B2	¾"φ	5	26'-0"	"
B3	¾"φ	8	22'-0"	Piers
B4	¾"φ	12	24'-4"	Bent see Pier Elev
P	⅞"φ	24	16'-0"	Columns Abut
W1	¾"φ	2	10'-6"	Wings
W2	"	2	9'-4"	"
W3	"	2	9'-0"	"
W4	"	2	8'-6"	"
W5	"	2	8'-0"	"
W6	"	2	7'-9"	"
W7	"	2	7'-6"	"
W8	"	4	11'-0"	"
W9	"	2	4'-0"	"
W10	"	2	5'-7"	"
W11	"	2	7'-6"	"
W12	"	2	9'-3"	"
W13	"	2	11'-0"	"
W14	"	2	12'-9"	"
B5	⅜"φ	22	9'-3"	Piers

Mark	Size	No	Length	Location
P1	¾"φ	44	13'-0"	Pier 9+10
P2	"	8	11'-0"	" 9+10
D	¾"φ	24	2'-6"	Abutment

S ⅜"φ 25 Req'd 7'-10"
C ⅜"φ 45 Req'd 7'-8"

All steel to be plain round bars of structural grade. Dimensions are to center line of bars.

Design by E.A.M.
Plan by E.E.B.
L C.L.P.

DIRECTORS OF THE MAINE KENNEBEC BRIDGE

MAINE KENNEBEC BRIDGE
OVER
KENNEBEC RIVER
BETWEEN THE TOWNS OF
RICHMOND ~ SAGADAHOC CO.
AND
DRESDEN ~ LINCOLN CO.

SUBSTRUCTURE DRESDEN APPROACH
Sheet 12 of 24 Augusta Me.

Revised 11/1/30 Elevations on abut. 2

13-24

0 1 2 3 4 5 INCHES

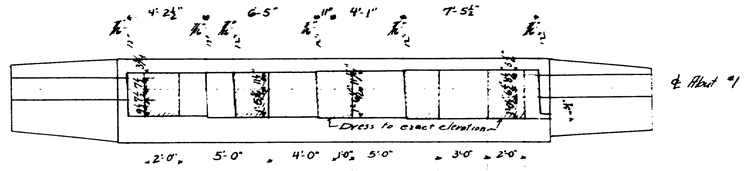

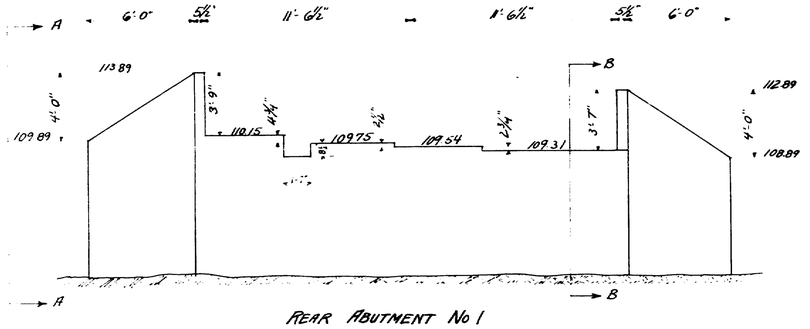

REAR ABUTMENT No 1

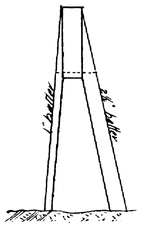

VIEW AA

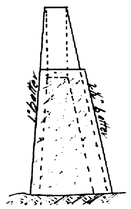

SECTION BB

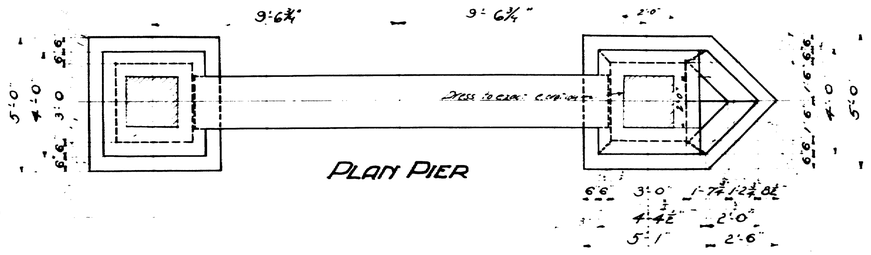

PLAN PIER

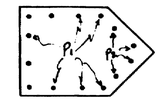

SECTION E-E

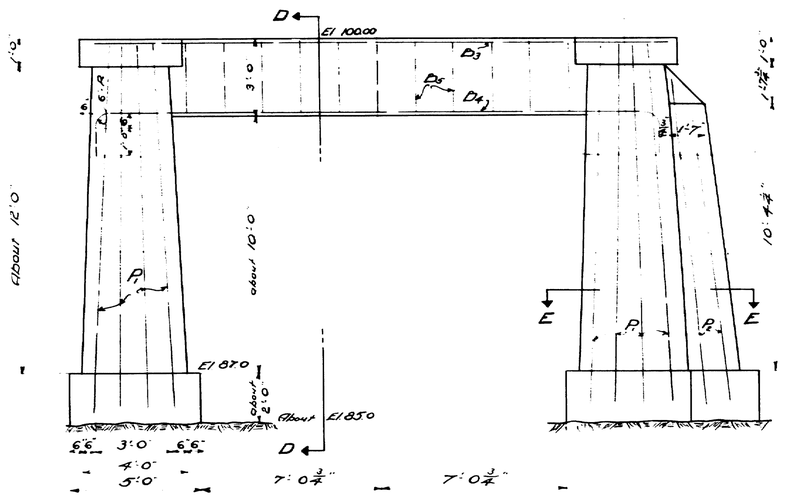

ELEVATION PIER 1

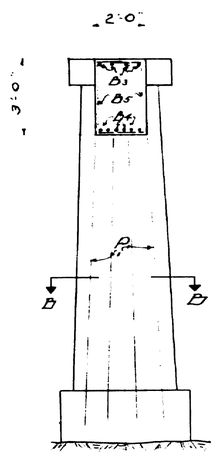

SECTION D-D

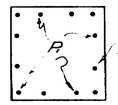

Note- Set steel 3" from surface

SECTION B-B

STEEL SCHEDULE

Mark	Size	No. Req'd	Length	Location
B3	½"ø	4	23'-0"	Pier #1
D4	½"ø	6	24'-7"	"
P1	½"ø	22	14'-0"	"
P2	½"ø	4	13'-0"	"

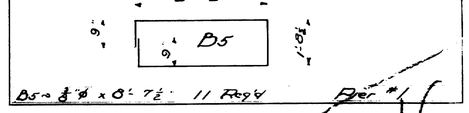

B5 = ½"ø x 8'-7½" 11 Reqd Pier #1

All steel to be plain round bars of structural grade
All dimensions to center lines of steel

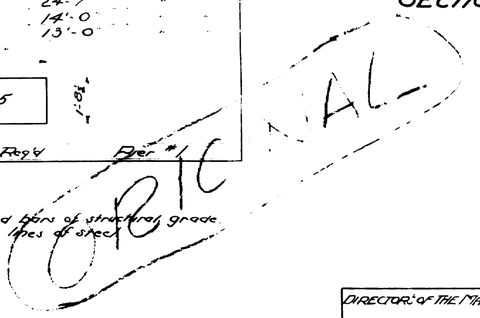

DIRECTOR OF THE MAINE KENNEBEC BRIDGE

MAINE KENNEBEC BRIDGE
OVER
KENNEBEC RIVER
BETWEEN THE TOWNS OF
RICHMOND in SAGADAHOC CO.
AND
DRESDEN in LINCOLN CO.

SUBSTRUCTURE RICHMOND APPROACH
SHEET [redacted] of [redacted] AUGUSTA, ME.

16 of 33

~~E-25~~

0 1 2 3 4 5 INCHES

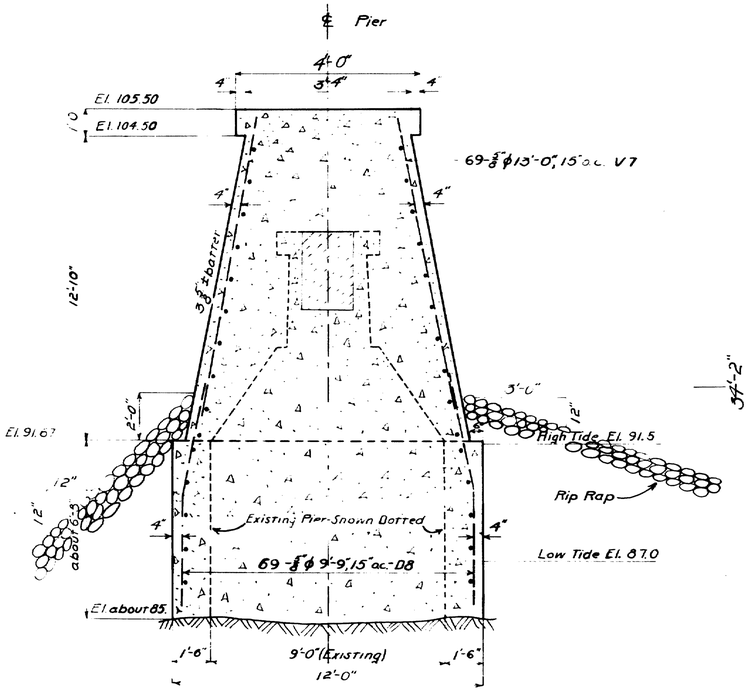

SECTION A A

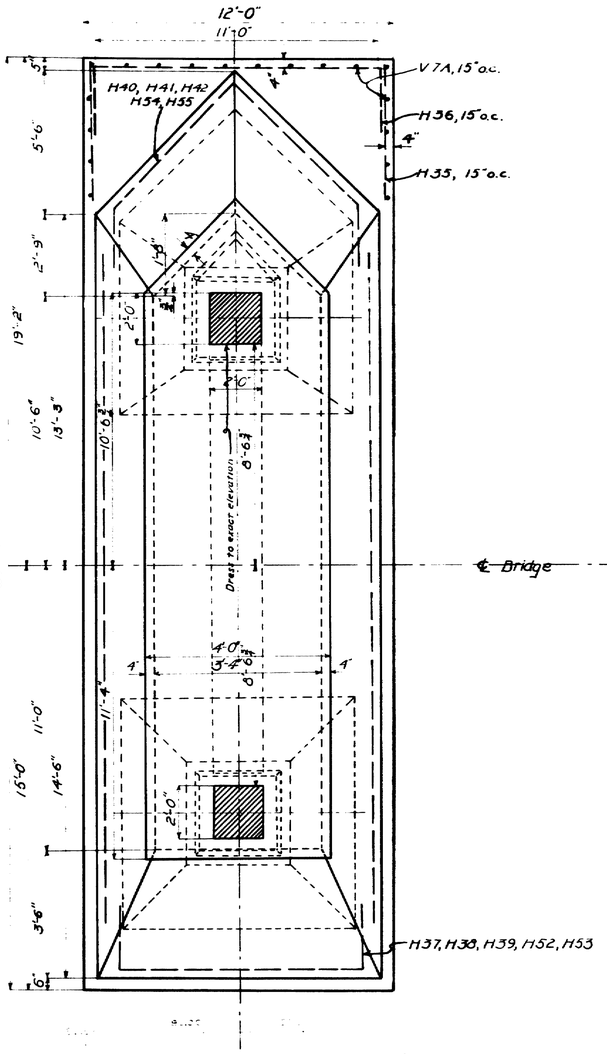

TOP VIEW

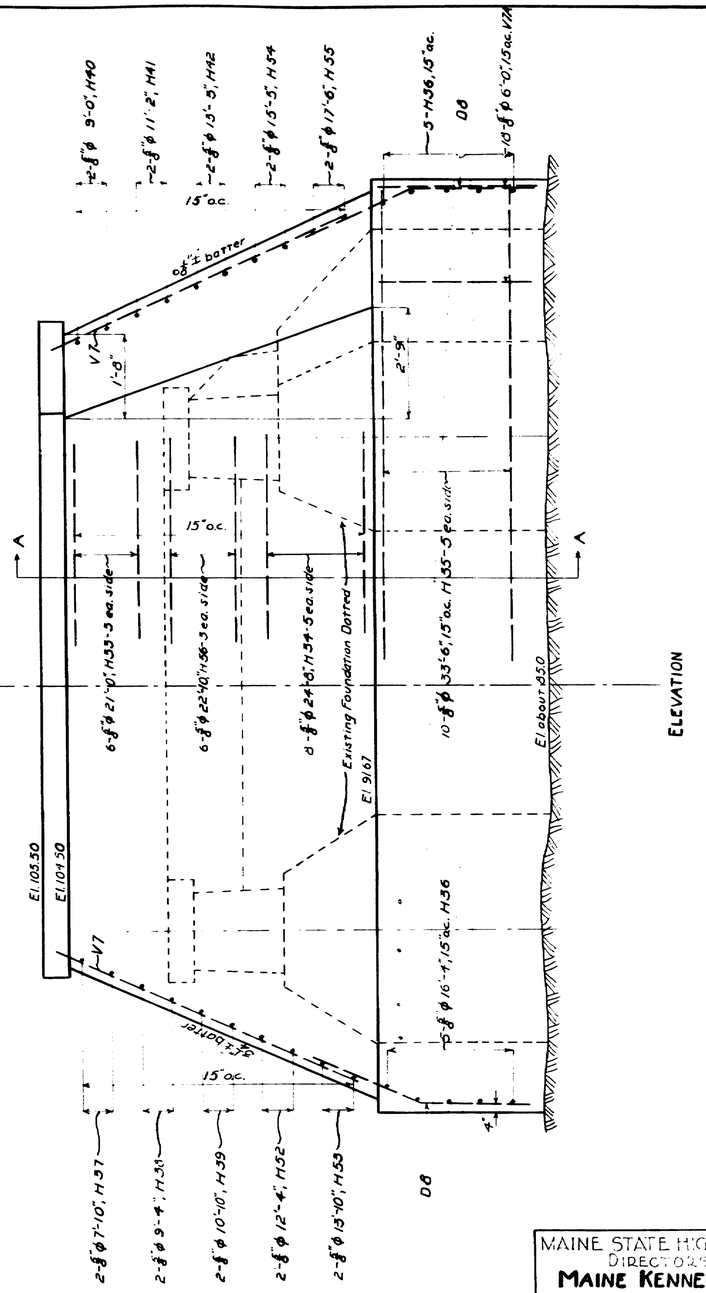

ELEVATION

New Work

Existing Concrete

Drawn by JAW
Traced by JAW
Checked by [illegible]

NOTE: Use this plan with Sheet Number 13 of the of the original plans.

Town: 12-08
Bridge: 2506

MAINE STATE HIGHWAY COMMISSION
DIRECTOR'S OFFICE

MAINE KENNEBEC BRIDGE
OVER
KENNEBEC RIVER
BETWEEN THE TOWNS OF
RICHMOND – SAGADAHOC CO.
AND
DRESDEN – LINCOLN CO.
NEW PIER NO. 1

Sheet 7 of 35 Augusta, Maine June, 1936

13-25A

0 1 2 3 4 5 INCHES

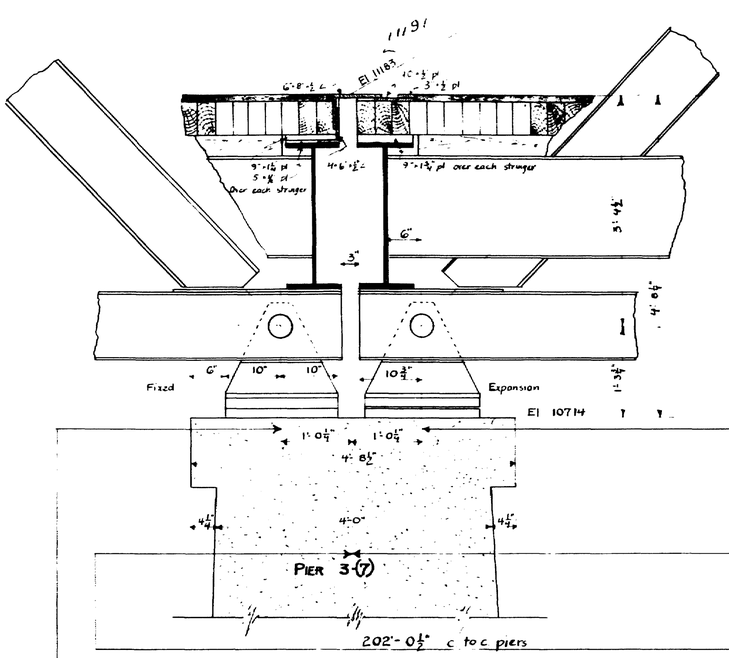

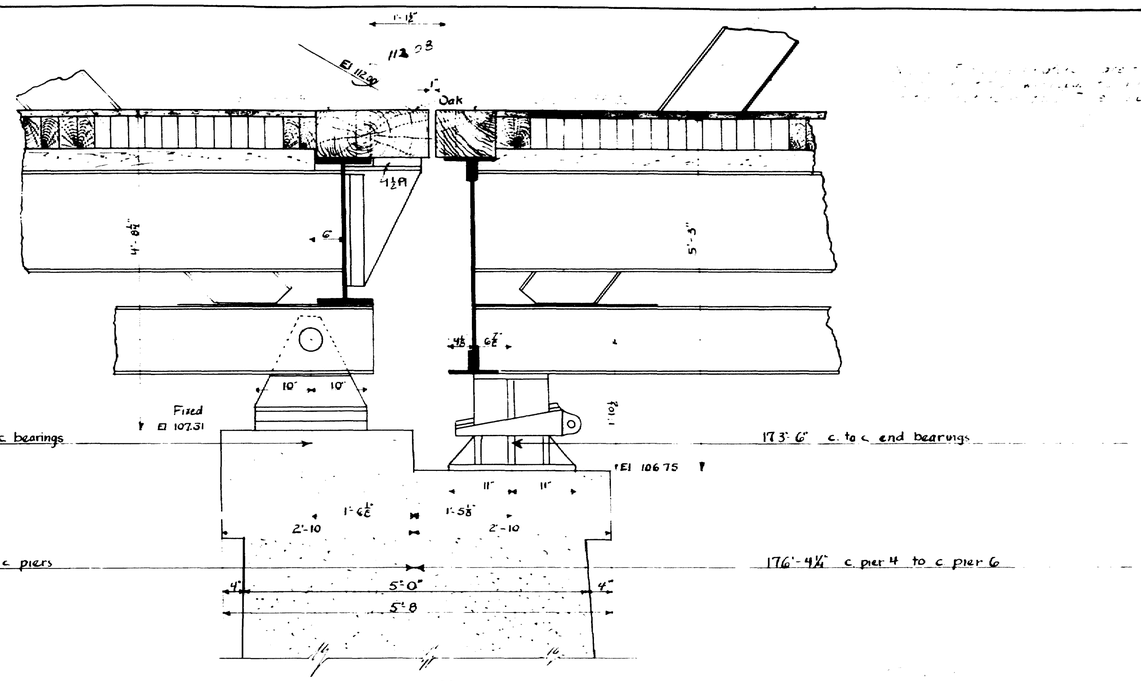

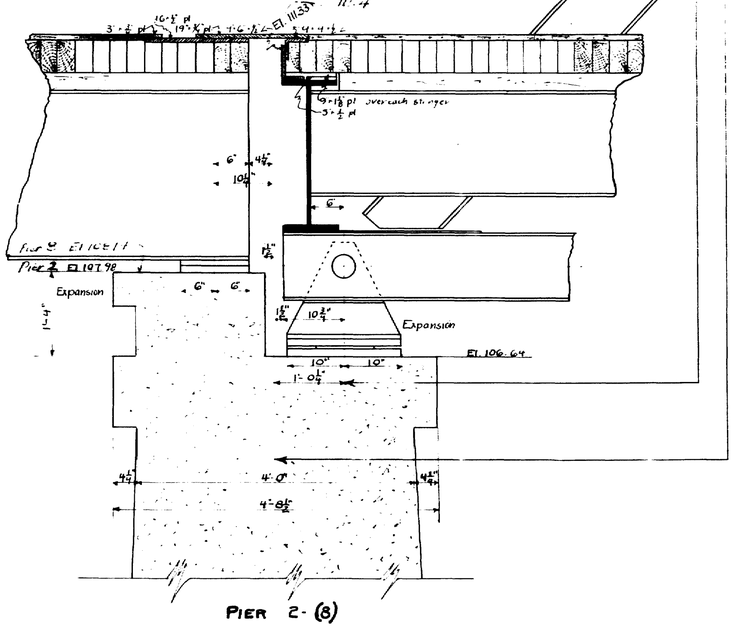

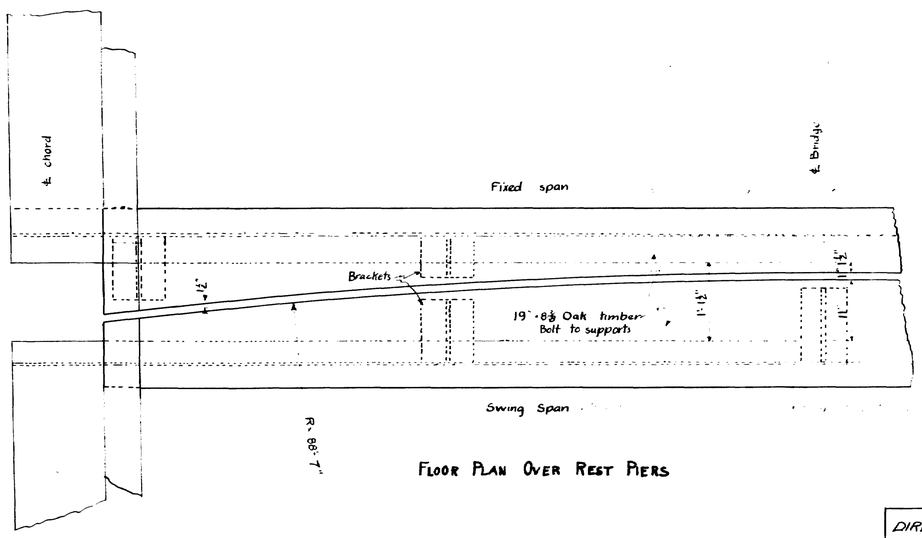

FLOOR PLAN OVER REST PIERS

DIRECTORS OF THE MAINE KENNEBEC BRIDGE

MAINE KENNEBEC BRIDGE
OVER
KENNEBEC RIVER
BETWEEN THE TOWNS OF
RICHMOND, SAGADAHOC CO
AND
DRESDEN LINCOLN CO.
DETAIL OVER PIERS
Sheet 14 of 27 Augusta, Me.
22 of 39 13-26

0 1 2 3 4 5 INCHES

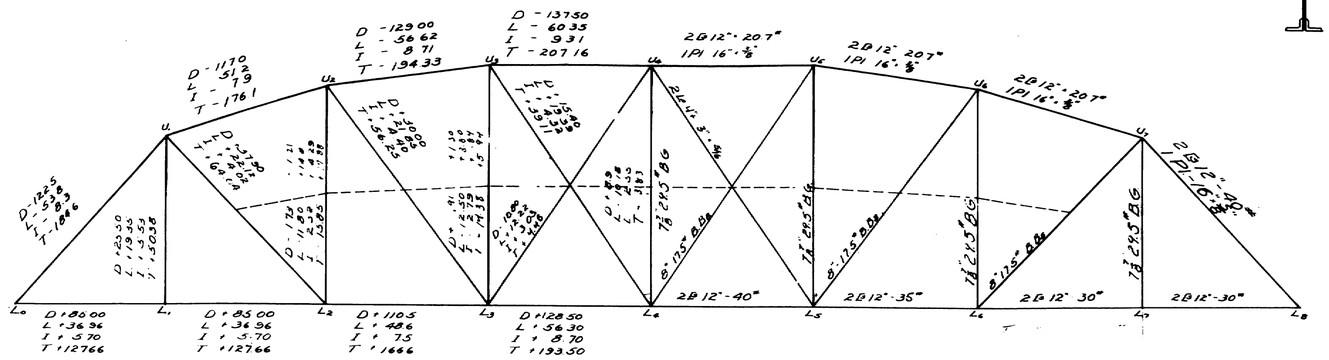

STRESS DIAGRAM.

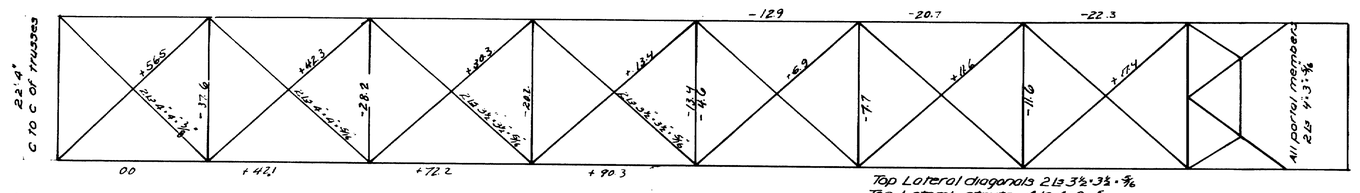

LATERAL FORCES
Moving load 50# per sq ft on 1½ times the area of the structure as seen in elevation.

HALF PLAN LOWER LATERALS

Top Lateral diagonals 2L 3½ · 3½ · ⅝
Top Lateral struts 4L 4 · 3 · ⅝
1PL 12" x ⅝

HALF PLAN UPPER LATERALS

LOADINGS

Dead Load 1018# per ft. of truss
Live Load H 10 AASHO
Impact = $\frac{50}{L+125}$

STRINGERS

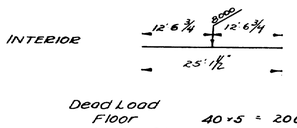

Dead Load
Floor 40 × 5 = 200
Nailing Strip 5 × 33 × 60 · 10
Stringers 520
262.0#

D.L.M $\frac{262.0 \times 25.12^2}{8}$ = 20 700 ft#
L.L.M (100% overload) $\frac{2 \times 5 \times 50300}{4}$ = 125 700
Impact 100% overload 333% = 41,800
188,200 ft#

$S = \frac{188200 \times 12}{24000}$ = 94.0

Use 18⅛" 52# B.B. S = 94.3

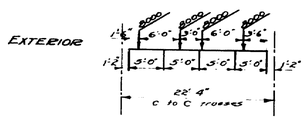

Dead Load

Curb	.5 × 5 × 1 × 60 #	15.0
Scuppers		2.5
Curb Plank	.08 × .5 × 1 × 60 #	2.4
Asphalt	25' × 10"	25.0
6" Floor	3" × .5 × 1 × 60 #	90.0
Nailing Strip	.33 × .5 × 1 × 60 #	9.9
Stringer		36.0
		180.8 #

D.L.M 1808 × 25.12²/8 = 14300 ft#
L.L.M 100% overload 2 × 50300 × $\frac{35}{S}$ = 70400
Impact (100% overload) 333% = 23400
108,100 ft#

$S = \frac{108100 \times 12}{24000}$ = 54.09

Use 14$\frac{28}{32}$" - 36# B.B. S = 55.1

FLOORBEAMS

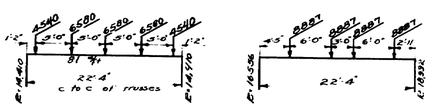

D.L.M Uniform $\frac{81.0 \times 2233^2}{8}$ = 50 40
D.L.M Concentrated (14410 + 11.1 ½) + (14540 + 10) + (6580 + 5) = 82,670
L.L.M (100% over load 2 (16356 + 10.5) + (8887 + 6) = 241 000
Impact + (100% over load) 28.6 % = 68,900
397,610

$S = \frac{397,610 \times 12}{24000}$ = 1990

Use 25$\frac{56}{32}$ - 81 # B.B.

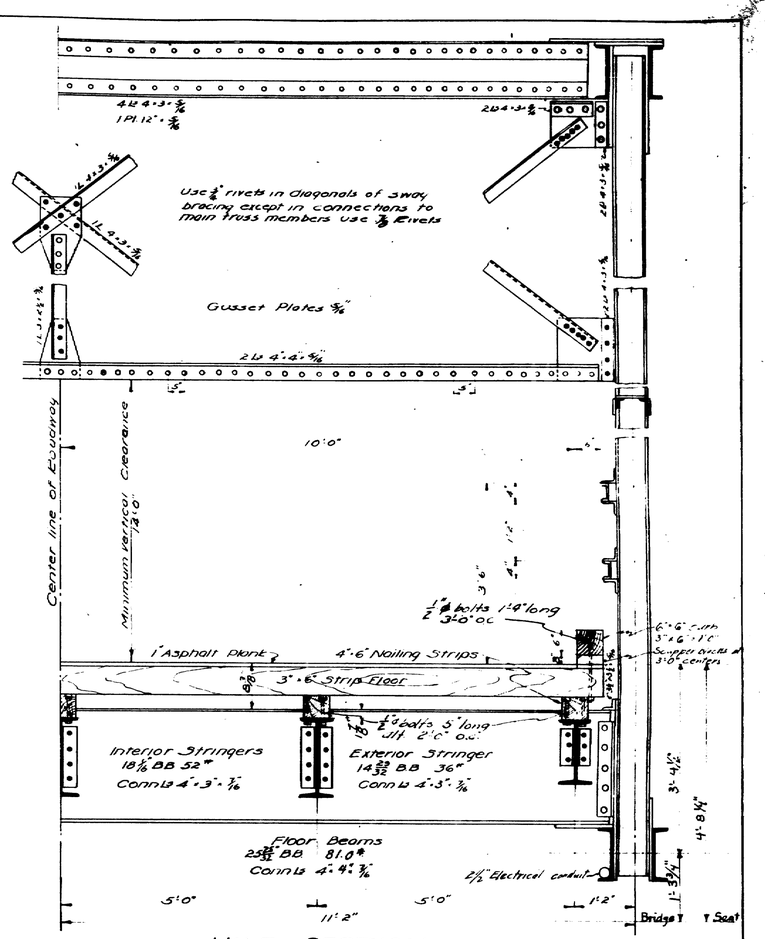

HALF SECTION

PEDESTALS

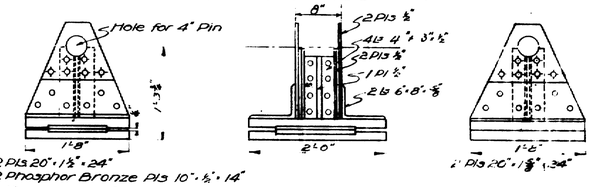

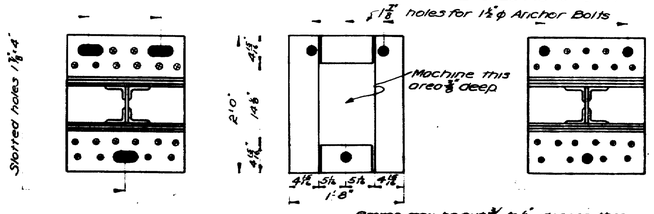

DESIGNED BY
TRACED HHF
CHECKED
PLOT SHS

DIRECTORS OF THE MAINE KENNEBEC BRIDGE

MAINE KENNEBEC BRIDGE
OVER
KENNEBEC RIVER
BETWEEN THE TOWNS OF
RICHMOND SAGADAHOC CO.
AND
DRESDEN LINCOLN CO.

STRESS SHEET

0 1 2 3 4 5 INCHES

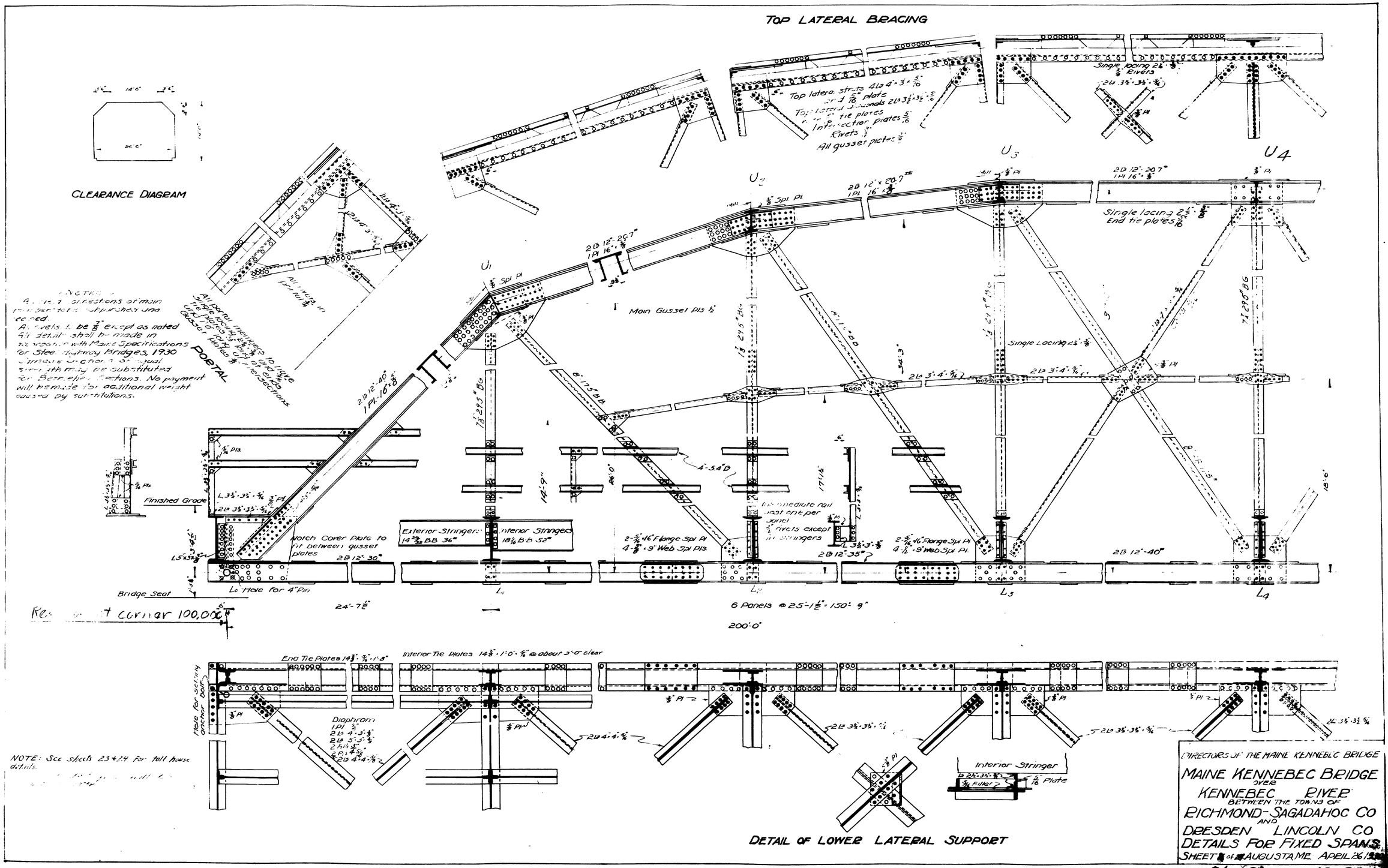

DIRECTORS OF THE MAINE KENNEBEC BRIDGE

MAINE KENNEBEC BRIDGE
OVER
KENNEBEC RIVER
BETWEEN THE TOWNS OF
RICHMOND-SAGADAHOC CO
AND
DRESDEN LINCOLN CO
DETAILS FOR FIXED SPANS
SHEET [illegible] of [illegible] AUGUSTA, ME. APRIL 26 19[illegible]

24 of 33.

~~13-28~~

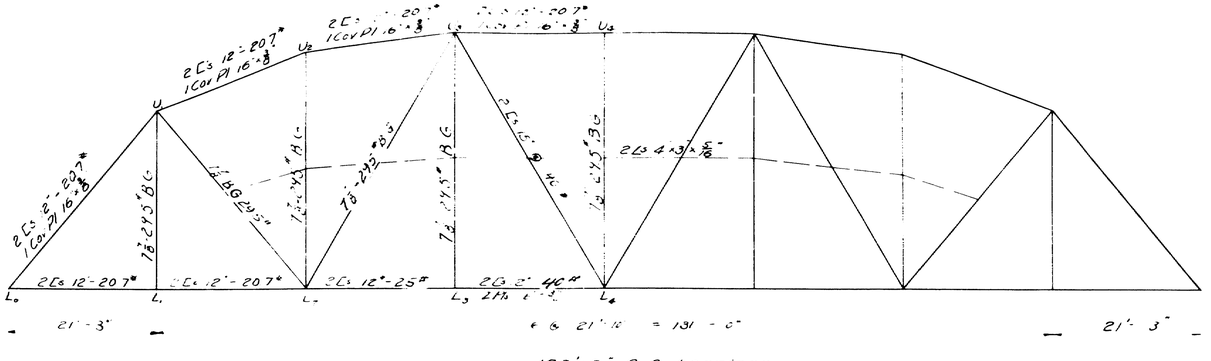

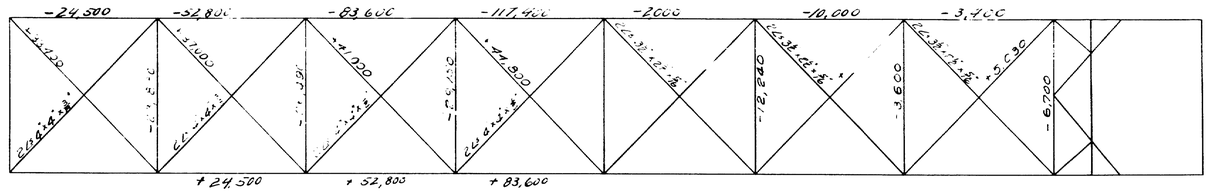

LOWER LATERALS

UPPER LATERALS

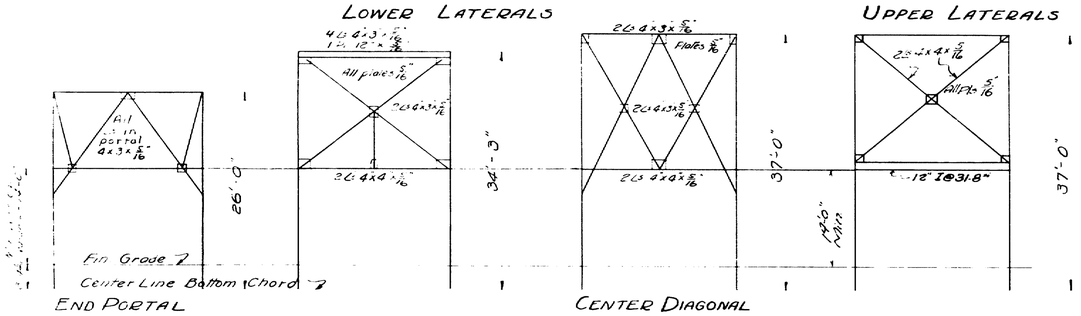

END PORTAL

CENTER DIAGONAL

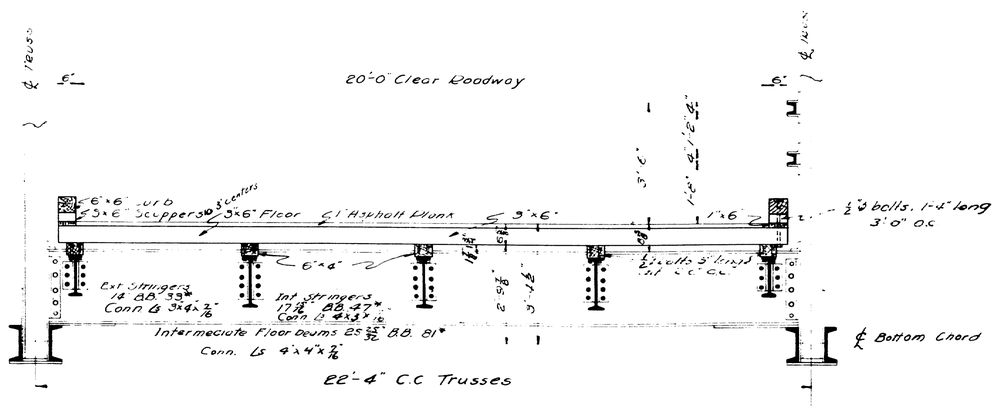

CROSS SECTION

Design by E.E.B.
Drawn by E.E.B.
Traced by H.L.B.

Case I - Dead Load: Bridge open or loaded with no end reactions.
II - Dead Load: Bridge closed with its ends lifted to cause positive end reactions equal to 1½ times the maximum live load negative reactions without impact.
III - Live Load: Bridge closed with one span loaded and considered as a simple span, but with indicated truss reactions.
IV - V Live Load: Bridge closed and considered as a continuous girder, and considered as a continuous girder, with the load placed so as not to cause negative reactions.

STRESS TABLE

Member	Case I + 20%	Case I - III	I + V	II + IV	II + V	Lateral Effect	Max Tension	Max Compression
$L_0 U_1$	+ 16,300	- 49,300	- 36,000	- 48,900	- 43,200	- 7400	18,300	-56,700
$U_1 U_2$	+ 38,300	- 19,000	- 4,400	- 18,900	- 13,000	- 5,000	38,300	- 24,000
$U_2 U_3$	+ 36,100	- 17,900	+ 4,600	+ 17,200	- 11,900	- 5000	41,100	- 32,900
$U_3 U_4$	+ 133,500	+ 111,200	+ 135,700	+ 116,700	+ 116,700	- 5,000	135,700	
$L_0 L_1$	- 11,600	+ 31,200	+ 22,800	+ 27,400	+ 27,400	- 3,800	31,200	- 48,000
$L_1 L_2$	- 11,600	+ 31,200	+ 22,800	+ 27,400	+ 27,400	- 3,800	110,400	- 90,800
$L_2 L_3$	- 75,000	- 35,200	- 53,000	- 38,800	- 38,800	- 3,800	111,900	- 206,400
$L_3 L_4$	- 75,000	- 35,200	- 53,000	- 38,800	- 38,800	- 3,800	158,100	- 251,000
$U_1 L_1$	+ 28,300	+ 72,900	+ 72,900	+ 72,900	+ 72,900	0	72,900	0
$U_1 L_2$	- 37,300	- 53,100	- 56,400	- 50,900	- 50,900	0	0	- 54,400
$U_2 L_2$	- 9,000	+ 4,500	+ 1,050	+ 4,500	+ 3,200	0	4500	- 9,000
$L_2 U_3$	+ 75,000	+ 101,200	+ 107,200	+ 99,300	+ 99,300	0	107,200	0
$U_3 L_3$	+ 28,300	+ 72,900	+ 72,900	+ 72,900	+ 72,900	0	72,900	0
$L_3 L_4$	- 115,000	- 149,700	- 151,400	- 147,700	- 142,000	31,200	0	- 182,600
$U_4 L_4$	0	0	0	0	0	0	0	0

+ Tension, - Compression Live Load Stresses increased 100% Lateral Forces " 50%

LOADING

Dead Load = 1081 # per lin. ft per truss
Live Load = Floor System 210 Ton Truck = Truss Min Uniform Load of 368.5 # per linear foot of truss + Concentration of 9,800 #

Impact = $I = \frac{50}{L+125}$ for all parts of structure, L = Loaded Length of Span

Wind Load = Top Chord - Moving Load of 20 # per sq foot on 6 ft Span on ½ Live Load Span
Bottom Chord - Moving Load of 15 # per sq foot on 9 ft Span on ½ Live Load Span
Stresses in Lateral System
S acting on end of span to cause stresses in lateral system.
S = 0.00035 WL
W = Weight of Structure L = Overall length

INTERIOR STRINGER

$\frac{8000 \times 21.81}{4}$ = 43,660 ft lbs

DEAD LOAD - 1" Asphalt Plank = 10#
6"x3" Floor = 30# 40#
Floor 40 x 3 = 200#
Nail Strip 1 x 4 = 10#
Stringer = 47#
257#

D L M 257 x 21.83^2 x 1.5 = 183,700 in.#
L L I.M (100% overload) 2 x 43,660 x $\frac{5}{8}$ x 12 = 1,309,800 in.#
I. M. (34% overload) 34% x 1,309,800 = 445,300 in.#
Total = 1,938,800 in.#

S = $\frac{1,938,800}{24,000}$ = 80.8

Use 17 7/16" B.B @ 47#

EXTERIOR STRINGER

Dead Load 1" Asphalt = 10#
6"x3" Floor = 30# = 40#

Floor	40" x 3 =	120#
Nailing strip	4" x 1" =	10#
Curb	6"x6" =	45#
Scupper + 1 plank	=	15#
Stringer	=	33#
		183#

D.L.M. 183 x 21.83^2 x 1.5 = 130,800 in.#
L.L.M (100% overload) 2 x 43,660 x $\frac{3.5}{5}$ x 12 = 733,600 in.#
I.M. (34% overload) .34 733,500 = 249,400 in.#
Total = 1,113,700 in.#

S = $\frac{1,113,700}{24,000}$ = 46.4

Use 14" B.B. @ 33#

FLOORBEAM

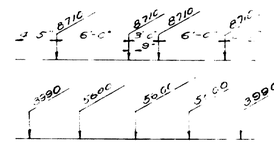

2183 x .2 = 560 Int Stringreaction
2183 x 1.83 = 3990 Ext " "
8,000 x $(\frac{4.83}{21.83} \times 2000)$ = 8 7/16 Live Concentration.

℄ (Live Load) = 34,880 x $\frac{6.9}{22.4}$ = 16,300

D.L.M (12,390) x 11.17 - 9 x 16 x 5.12 = 69,600

Main Wt of FL Beam $81 \times 33^2 \times 1.5$ = 69,600

L.L.M (100% overload) (16,000 x 16.72 + 6 x 16.6) x .2 = 2 = 1322,000

I.M (100% overload) 2,815,000 x 49% = 138,100
76K.1 = 4,566,700

S = $\frac{4,566,700}{24,000}$ = 190.2

Use 33 $\frac{25}{32}$ B.B @ 81#

DIRECTORS OF THE MAINE KENNEBEC BRIDGE

MAINE KENNEBEC BRIDGE OVER KENNEBEC RIVER

BETWEEN THE TOWNS OF RICHMOND, SAGADAHOC CO. AND DRESDEN, LINCOLN CO.

STRESS SHEET

SHEET No. 4 AUGUSTA, ME. APR. 15, 1930.

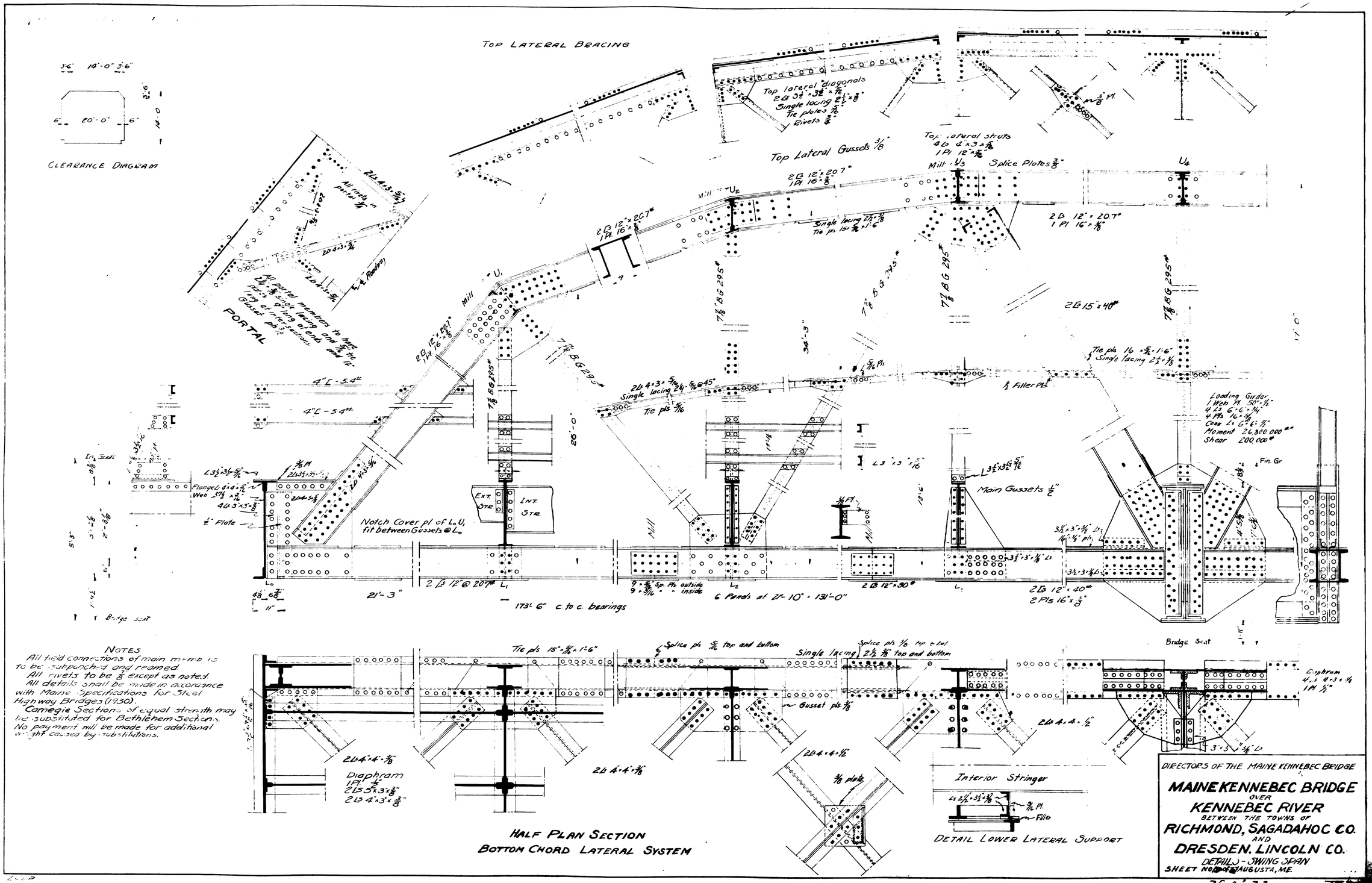

NOTES

All field connections of main members to be subpunched and reamed.
All rivets to be 7/8" except as noted.
All details shall be made in accordance with Maine Specifications for Steel Highway Bridges (1930).
Carnegie Sections of equal strength may be substituted for Bethlehem Sections.
No payment will be made for additional weight caused by substitutions.

HALF PLAN SECTION
BOTTOM CHORD LATERAL SYSTEM

DIRECTORS OF THE MAINE KENNEBEC BRIDGE

MAINE KENNEBEC BRIDGE
OVER
KENNEBEC RIVER
BETWEEN THE TOWNS OF
RICHMOND, SAGADAHOC CO.
AND
DRESDEN, LINCOLN CO.
DETAILS - SWING SPAN
SHEET NO. 2 OF 3 AUGUSTA, ME.

26 of 33

NOTE

Details shown are suggestive of those to be used in the preparation of the shop detail plans.
All details to be prepared in accordance with Maine State Highway Commission Specifications for Highway Bridges 1930 and the special specifications for this bridge.
Machinery is to open bridge in 11 min against a 5# wind and to hold bridge in any position against a 10# wind. Wedges are to operate in 15 sec. Three men to be able to open bridge in 7½ min against a 15# wind.
Gear teeth to be of the 20° involute type.

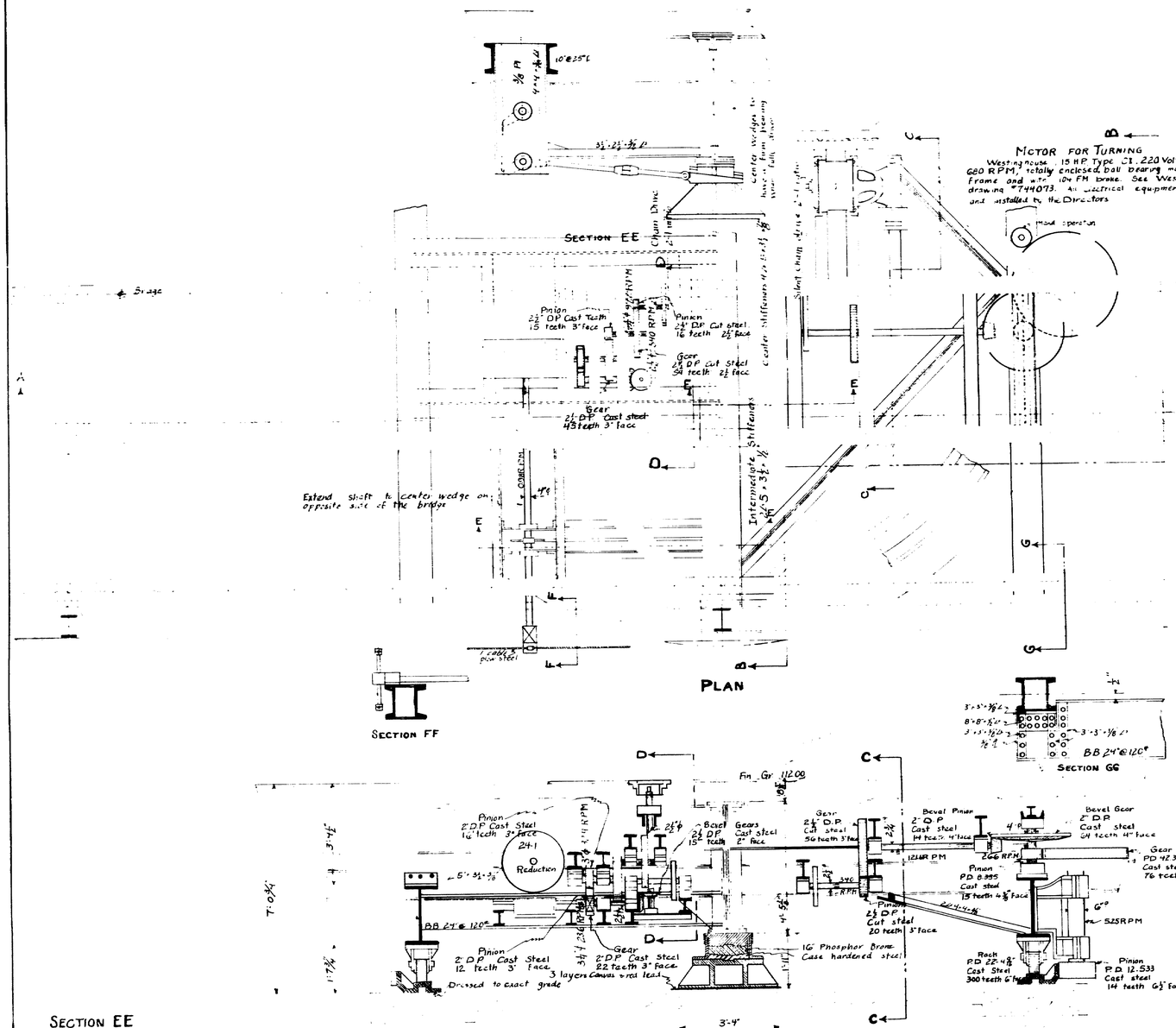

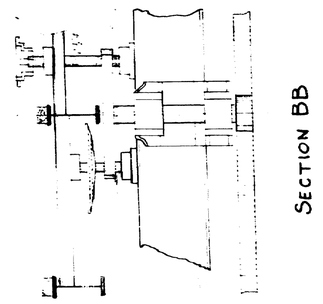

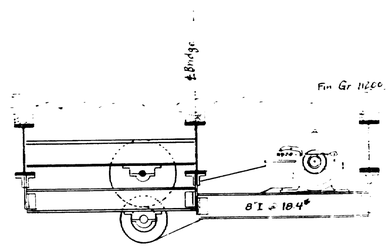

Section CG

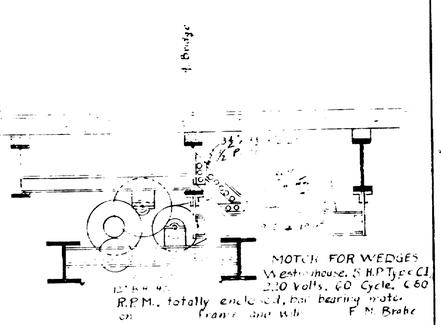

Section DD

DIRECTORS OF THE MAINE KENNEBEC BRIDGE

MAINE KENNEBEC BRIDGE

OVER

KENNEBEC RIVER

BETWEEN THE TOWNS OF

RICHMOND SAGADAHOC CO.

AND

DRESDEN LINCOLN CO.

MACHINERY LAYOUT

Sheet 19 of 24 Augusta, Me.

27 of 33

13-31

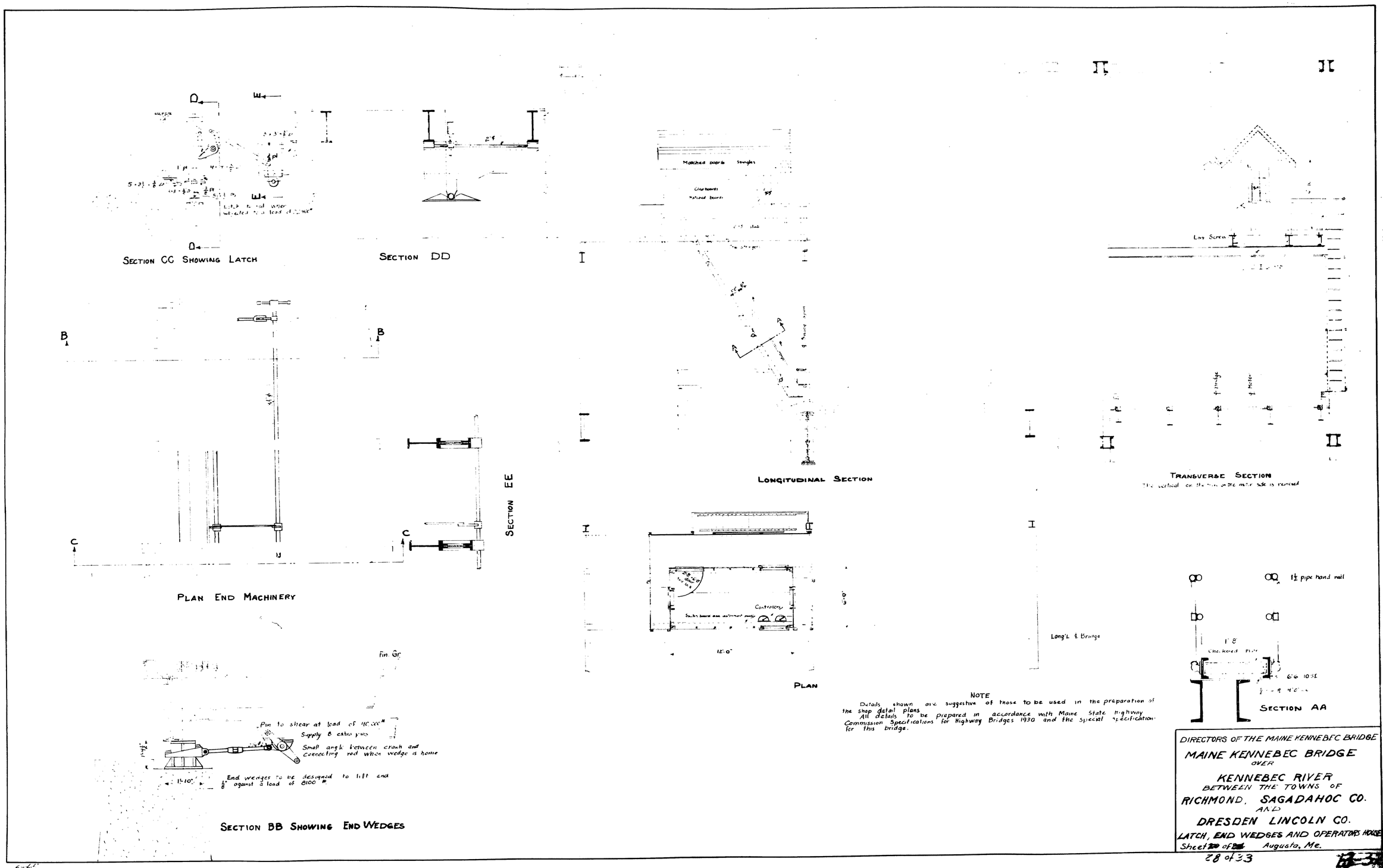

NOTE

Details shown are suggestive of those to be used in the preparation of the shop detail plans.
All details to be prepared in accordance with Maine State Highway Commission Specifications for Highway Bridges 1930 and the Special Specification for this bridge.

DIRECTORS OF THE MAINE KENNEBEC BRIDGE

MAINE KENNEBEC BRIDGE
OVER
KENNEBEC RIVER
BETWEEN THE TOWNS OF
RICHMOND, SAGADAHOC CO.
AND
DRESDEN LINCOLN CO.

LATCH, END WEDGES AND OPERATORS HOUSE

Sheet 28 of 33 Augusta, Me.

0 1 2 3 4 5 INCHES

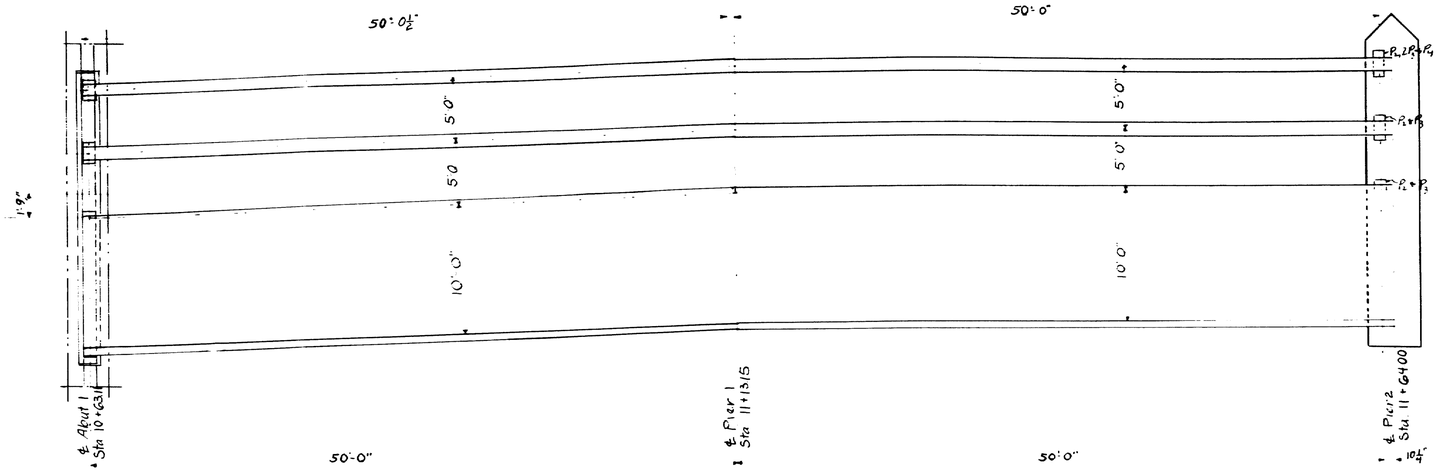

PLAN

Note - All rivets to be ⅞" except as noted. All details shall be made in accordance with Maine Specifications for Steel Highway Bridges 1930.
Sections of equal strength may be substituted for Bethlehem Sections. No payment will be made for additional weight caused by substitutions.

Note - Cover the ½" vertical slats between superstructure and wing walls on the pach side and the 2" opening between the end cross beam and bridge seat on the back side with 2 layers of heavy roofing felt. Coat surface of concrete and back side of each layer as applied with hot tar or asphalt. Felt is to be 10" wide. The area to be covered by the felt is to be recessed ¼" by nailing thin strips to the form before concrete is placed.

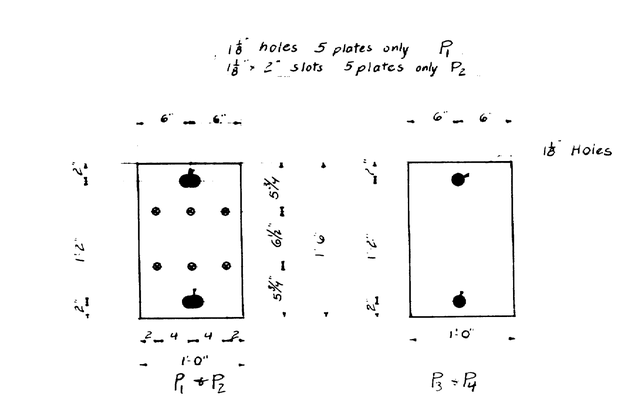

P1	5	Req'd	1¼" Milled to grade
P2	5	"	1⅛" " " "
P3	11	Req'd	1¼"
P4	3	"	1¼"

BEARING DETAILS

17 at about 5'-10½"

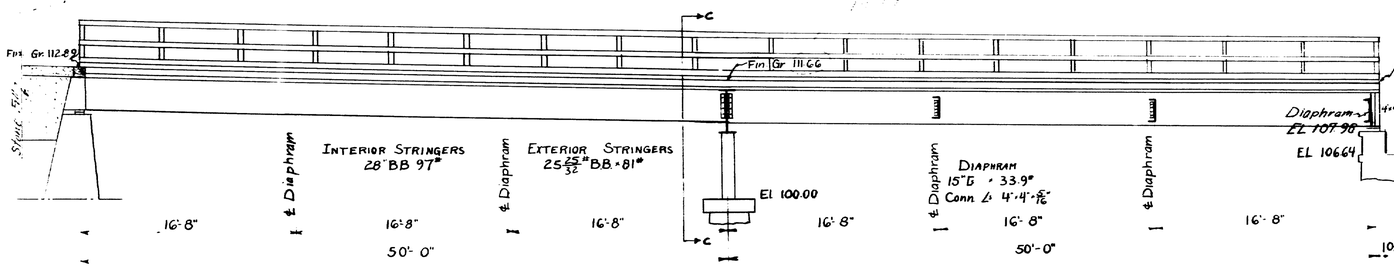

SECTION

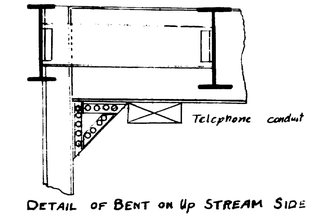

DETAIL OF BENT ON UP STREAM SIDE

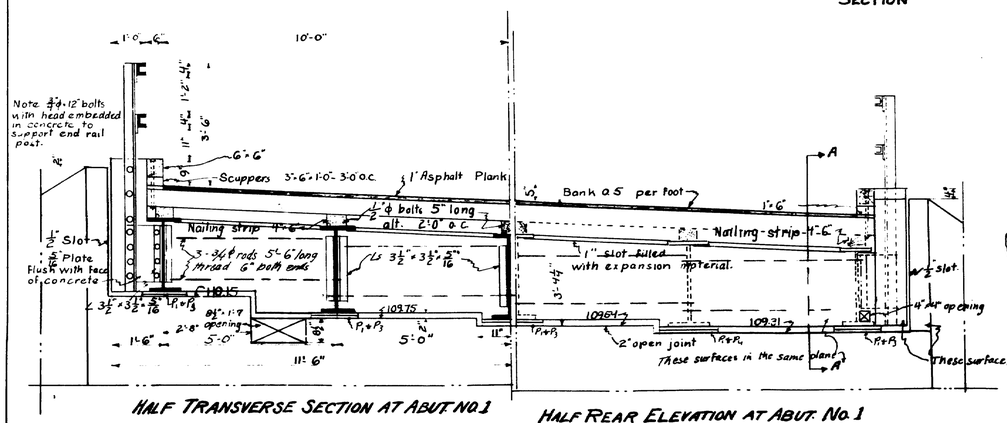

HALF TRANSVERSE SECTION AT ABUT. NO. 1

HALF REAR ELEVATION AT ABUT. No. 1

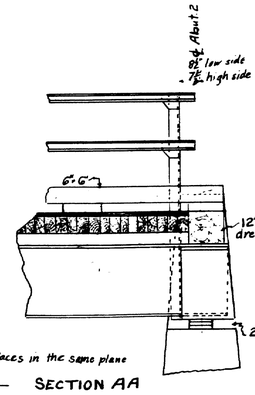

SECTION AA

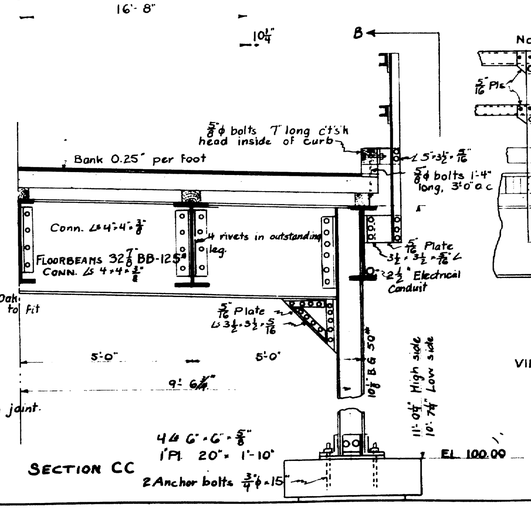

VIEW B-B

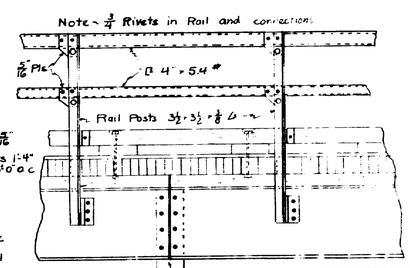

DIRECTORS OF THE MAINE KENNEBEC BRIDGE
MAINE KENNEBEC BRIDGE
OVER
KENNEBEC RIVER
BETWEEN THE TOWNS OF
RICHMOND SAGADAHOC CO.
AND
DRESDEN LINCOLN CO.
DETAILS - RICHMOND APPROACH
Sheet 7 of 29 Sheets
Augusta, Me.

0 1 2 3 4 5 INCHES

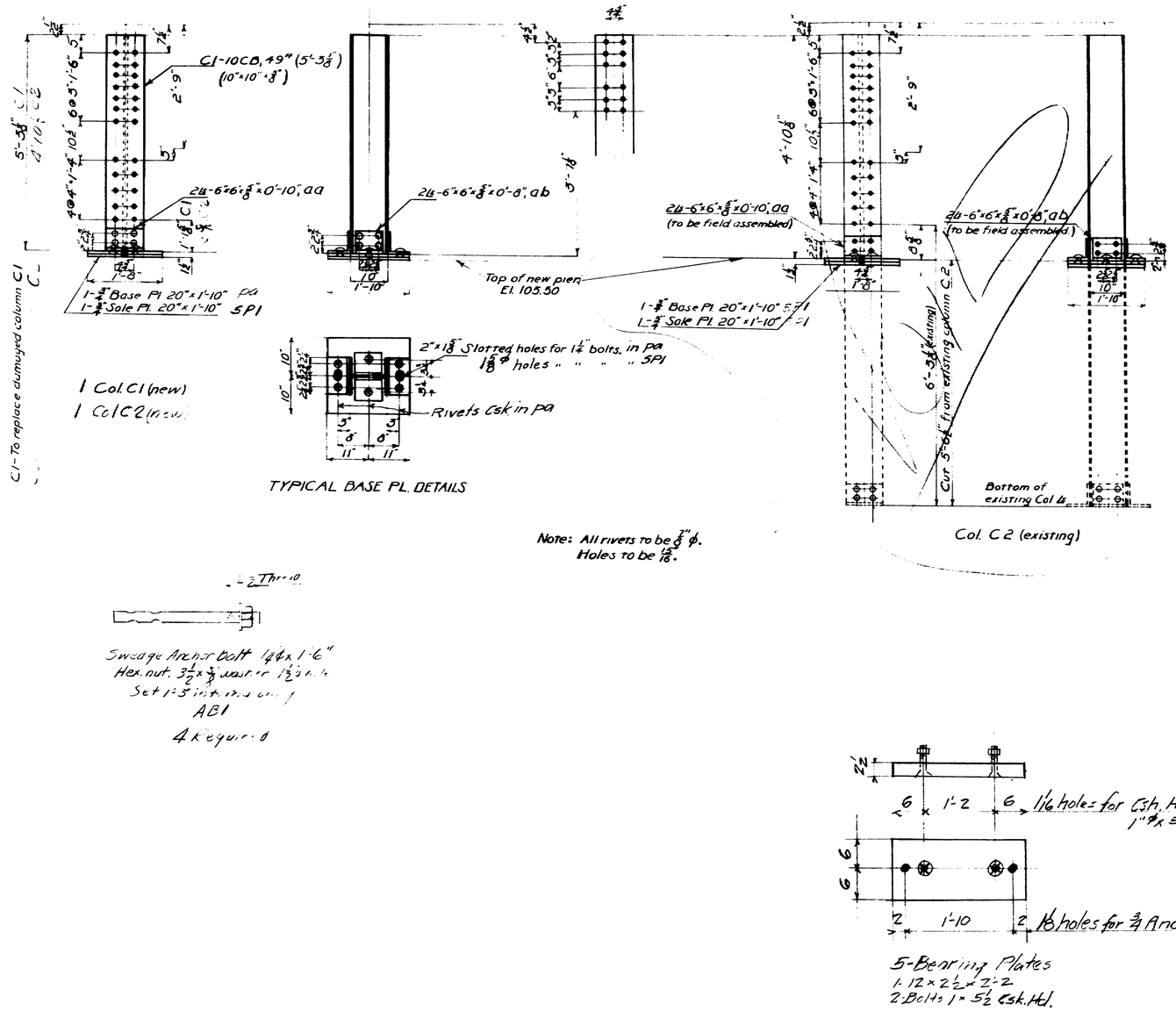

Note! Use American Bridge Co. Shop Details Sh.1 & Sh.E1 with this drawing.

Design E.A.M.
Traced J.A.W.
Checked J.A.W.

TOWN: 12-08
BRIDGE: 2506

MAINE STATE HIGHWAY COMMISSION
DIRECTORS OF THE
MAINE KENNEBEC BRIDGE
OVER
KENNEBEC RIVER
BETWEEN THE TOWNS OF
RICHMOND-SAGADAHOC CO.
AND
DRESDEN-LINCOLN CO.
SHOP DETAILS OF C1 and C2
Sheet 34 of 33 Augusta, Maine July 21, 1936

(12)

13-33A

0 1 2 3 4 5 INCHES

3 at 50'-0" = 150'-0"

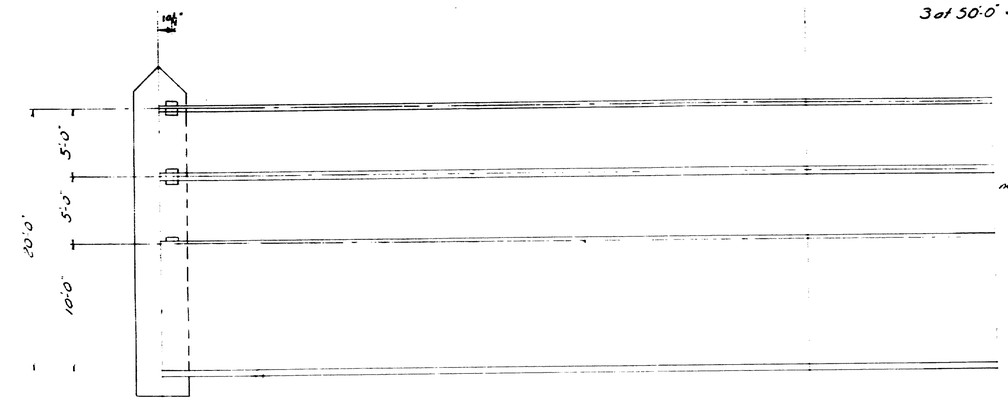

PLAN

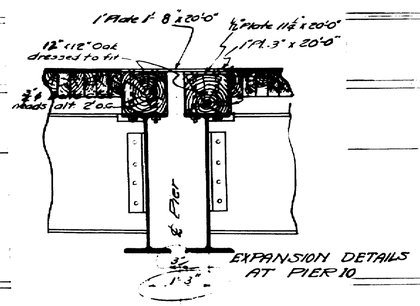

EXPANSION DETAILS AT PIER 10

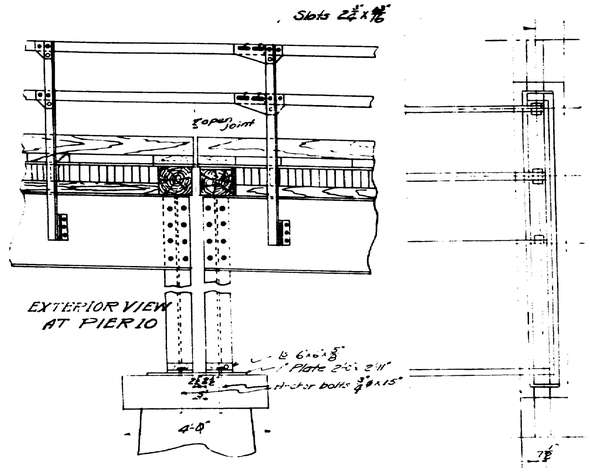

25 at about 6'-0"

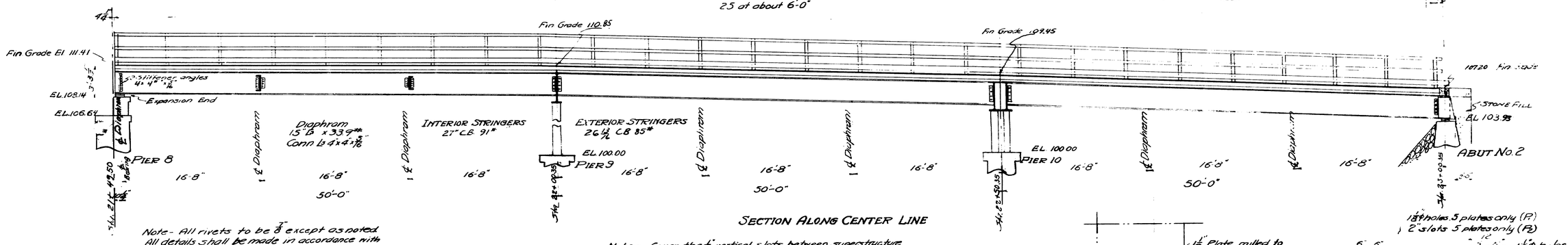

SECTION ALONG CENTER LINE

Note- All rivets to be ⅞" except as noted. All details shall be made in accordance with Maine Specifications for Steel Highway Bridges 1930.

Sections of equal strength may be substituted for Bethlehem Sections. No payment will be made for additional weight caused by substitutions.

Note- Cover the ½" vertical slots between superstructure and wing walls on the backside and the 2" opening between the end cross beam and bridge seat on the back side with 2 layers of heavy roofing felt. Coat surface of concrete and back side of each layer as applied with hot tar or asphalt. Felt is to be 10" wide. The area to be covered by the felt is to be recessed ¼" by nailing thin strips to the form before concrete is placed.

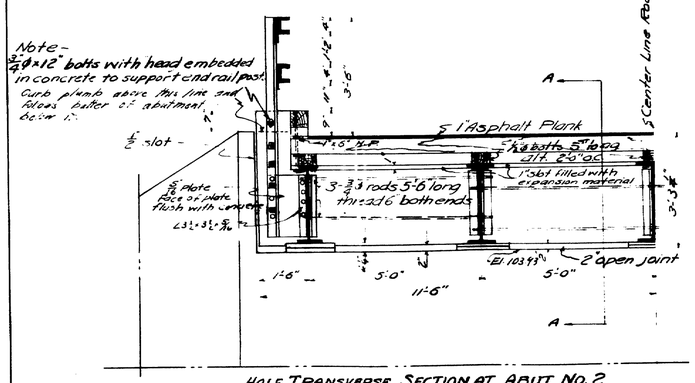

HALF TRANSVERSE SECTION AT ABUT. NO. 2

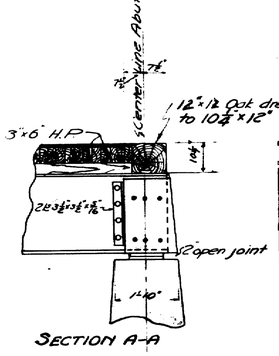

SECTION A-A

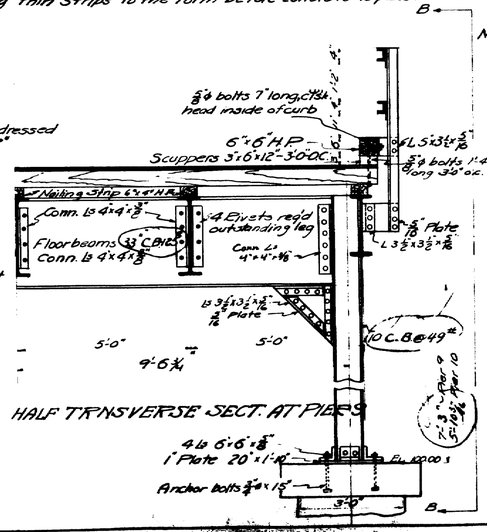

HALF TRANSVERSE SECT. AT PIER 9

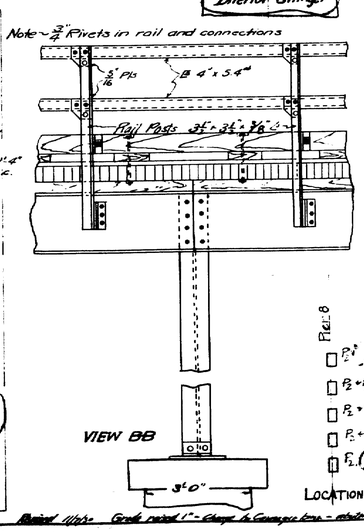

VIEW BB

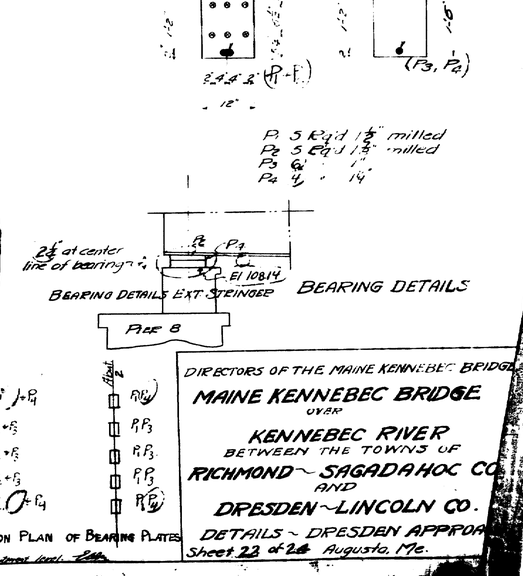

LOCATION PLAN OF BEARING PLATES

DIRECTORS OF THE MAINE KENNEBEC BRIDGE

MAINE KENNEBEC BRIDGE
OVER
KENNEBEC RIVER
BETWEEN THE TOWNS OF
RICHMOND ~ SAGADAHOC CO.
AND
DRESDEN ~ LINCOLN CO.

DETAILS ~ DRESDEN APPROA

Sheet 23 of 24 Augusta, Me.

Design by B.H.M.
Plan by B.B.S.
C.L.P.

0 1 2 3 4 5 INCHES

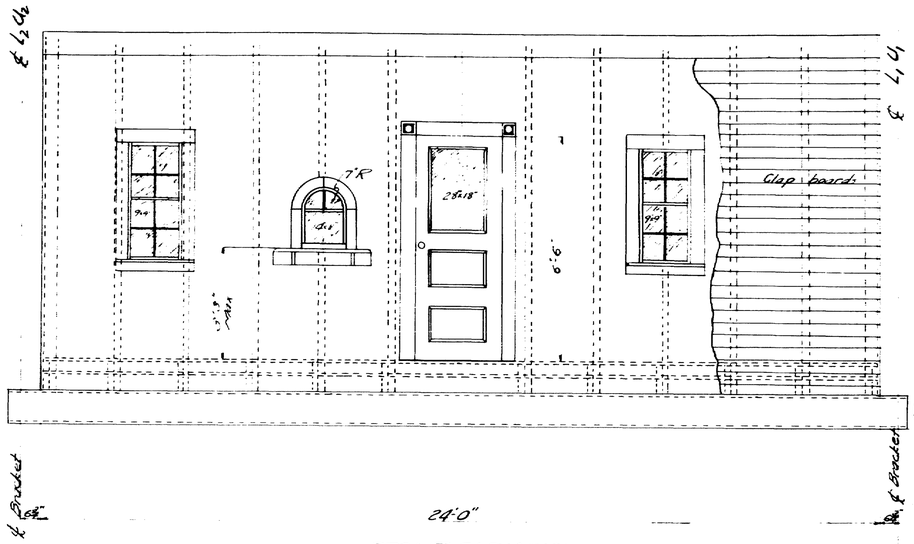

FRONT ELEVATION

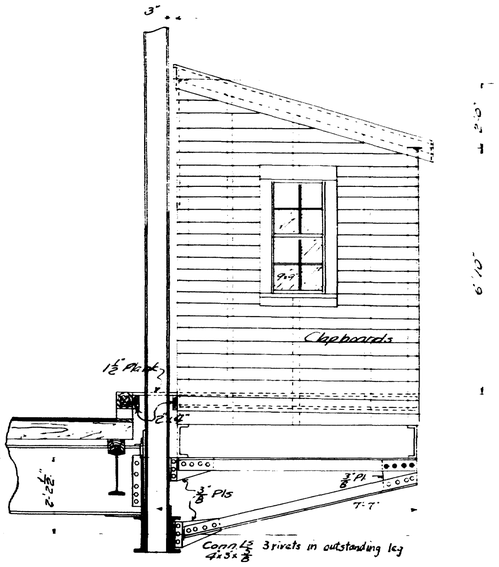

END VIEW

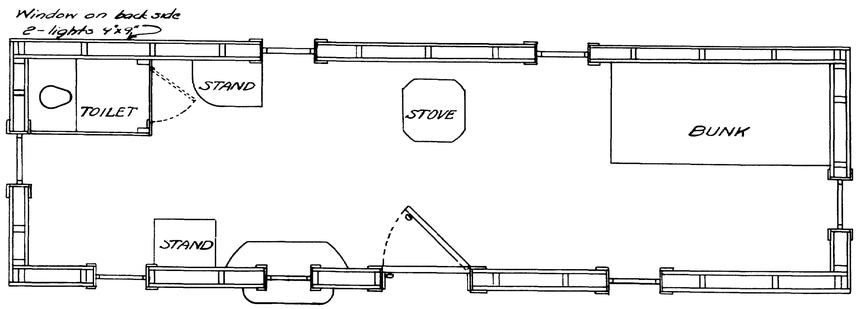

PLAN

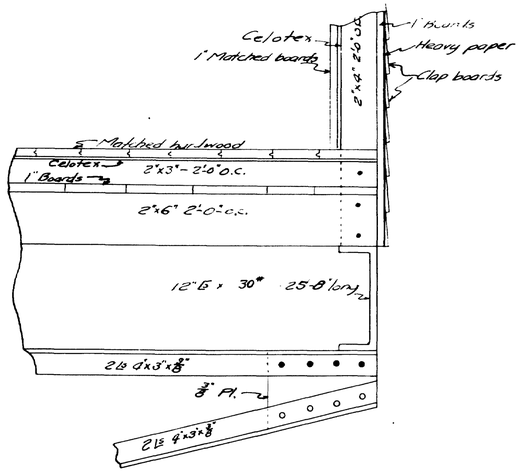

SECTION ~ FLOOR + WALL

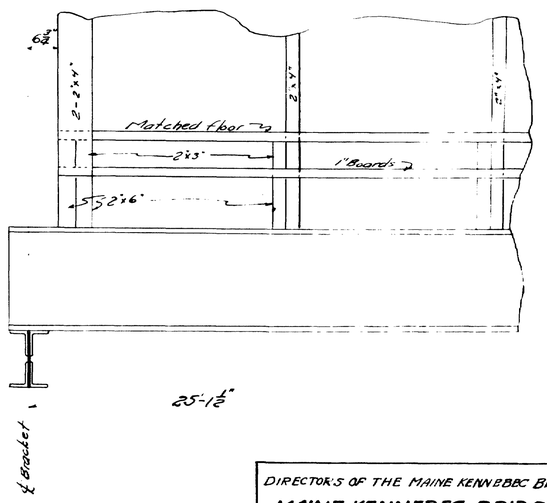

Note: Toll house to be located along second panel from swing span on Richmond ~~end~~ upstream side.

DIRECTOR'S OF THE MAINE KENNEBEC BRIDGE

MAINE KENNEBEC BRIDGE

OVER

KENNEBEC RIVER

BETWEEN THE TOWNS OF

RICHMOND SAGADAHOC CO

AND

DRESDEN LINCOLN CO.

DETAILS TOLL HOUSE NO. 1

Sheet 23 of 24 Augusta Me.

31 of 33

Design E.A.M.
Plan E.E.B.
I.C.P.

0 1 2 3 4 5 INCHES

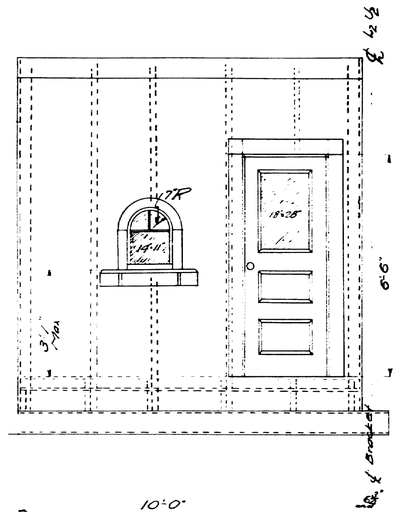

FRONT ELEVATION

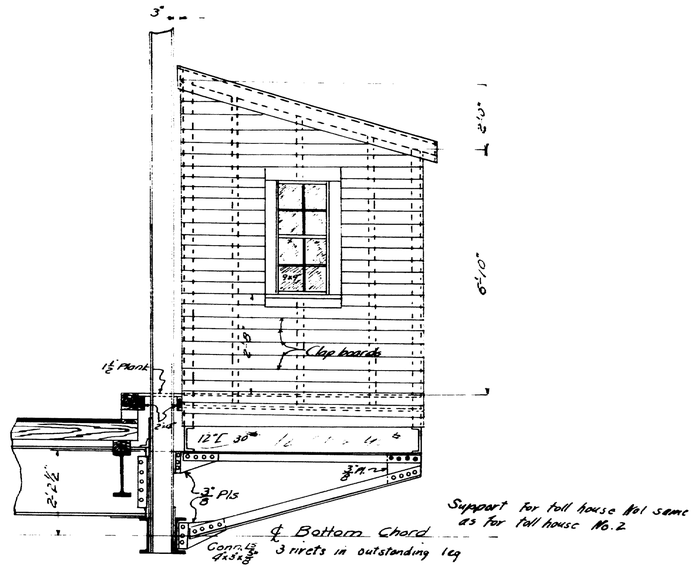

END VIEW

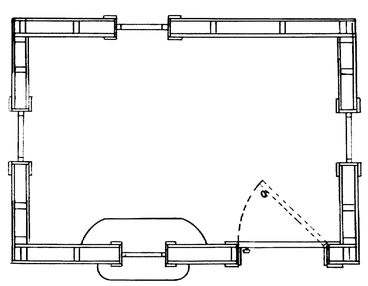

PLAN

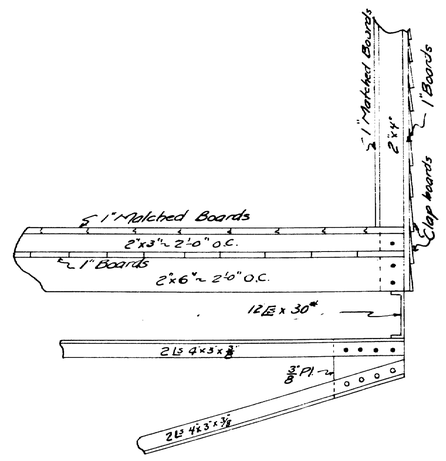

SECTION FLOOR + WALL

Note: Toll house No. 2 to be located along second panel from swing span on downstream side Richmond end.

Design E.A.M.
Plan E.B.B.
C.L.P.

DIRECTORS OF THE MAINE KENNEBEC BRIDGE.

MAINE KENNEBEC BRIDGE

OVER

KENNEBEC RIVER

BETWEEN THE TOWNS OF

RICHMOND ~ SAGADAHOC CO.

AND

DRESDEN ~ LINCOLN CO.

DETAILS TOLL HOUSE NO. 2

SHEET 32 of 33 AUGUSTA, ME.

0 1 2 3 4 5 INCHES

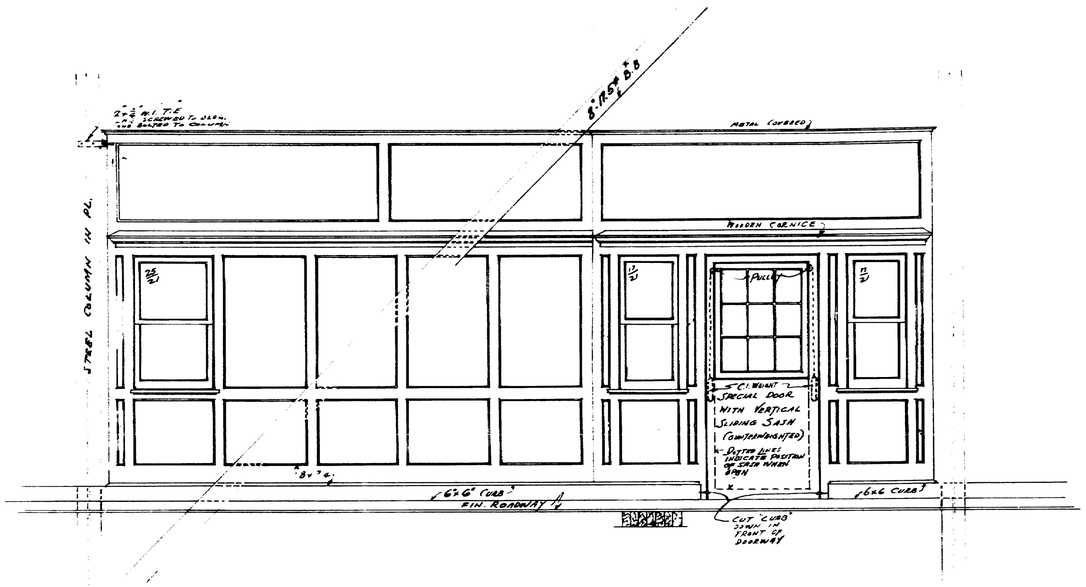

FRONT ELEVATION
(LOOKING UPSTREAM)

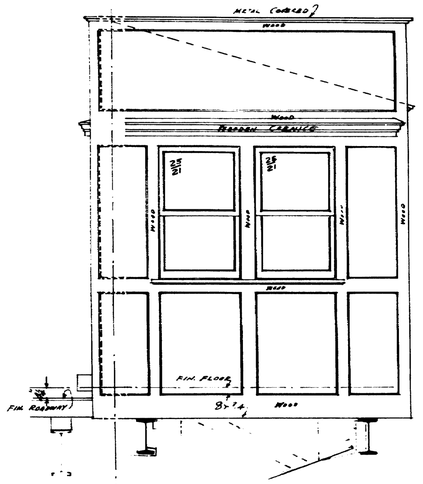

END ELEVATION
(LOOKING TOWARD RICHMOND)

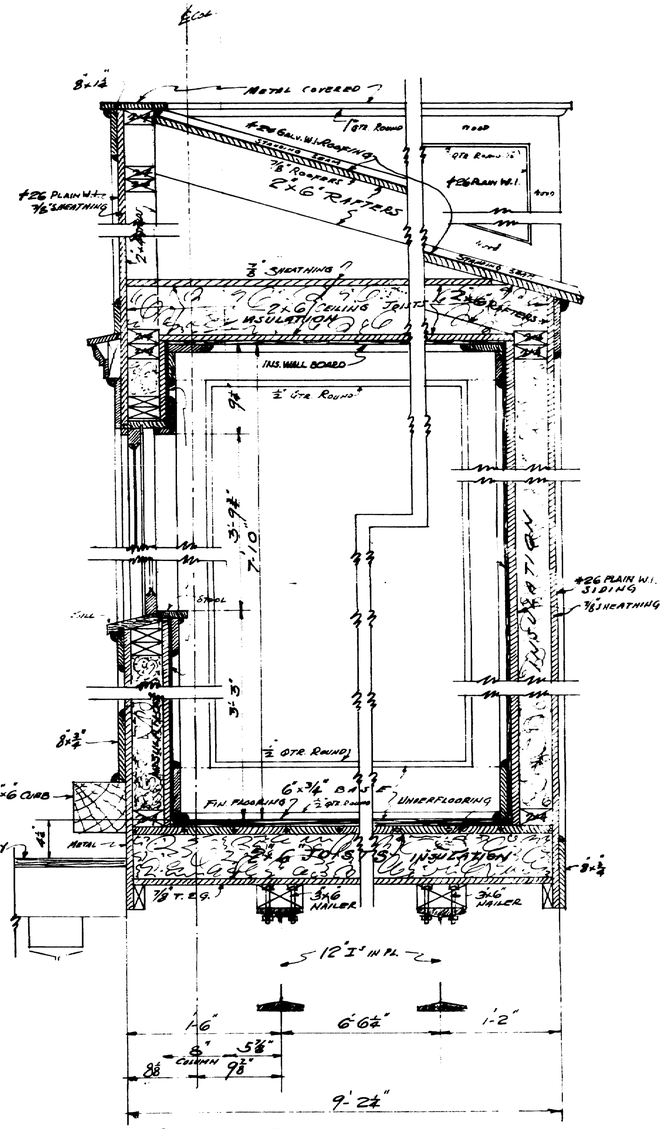

SECTION
ON LINE "A-A"
SCALE 1 1/2" = 1'-0"

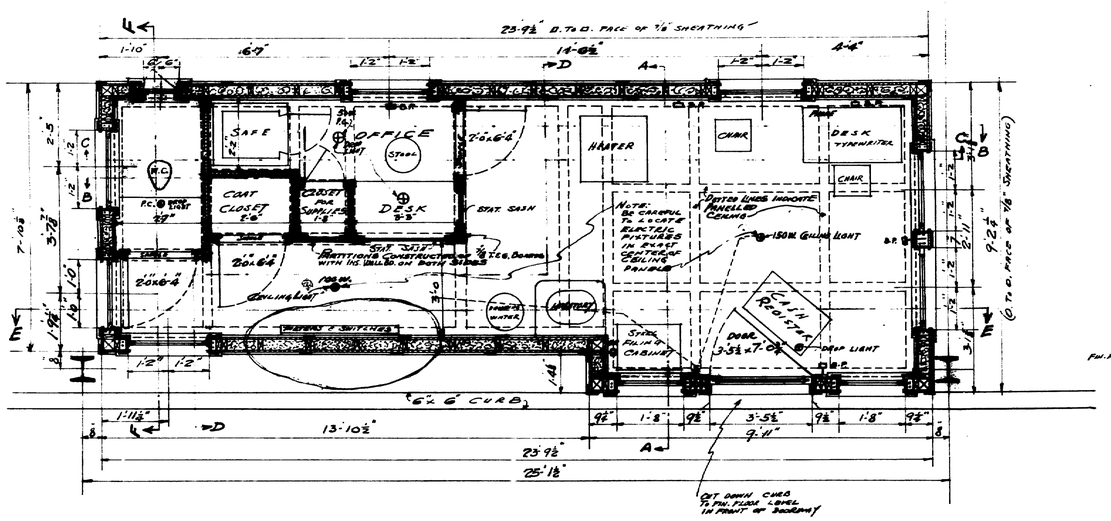

PLAN
SCALE 1/2" = 1'-0"

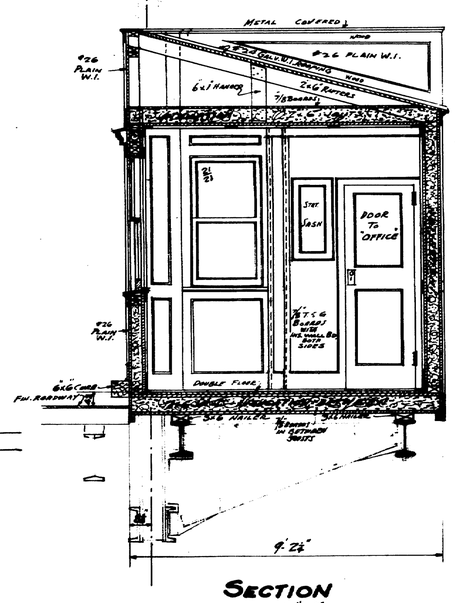

SECTION
ON LINE "A-A"

COVER ROOF WITH BLACK WATERPROOF PAPER
ROOFING #24 GALV. W.I. (STANDING SEAM)
OUTSIDE WALL PANELS - #26 PLAIN W.I. SHEETS
INSIDE PANELS - INSULATED WALL BOARD
CEILING ELEC. FIXTURES - WESTINGHOUSE OR EQUAL
75-100 STYLE 343012 W 150 STYLE 343013 W

REVISED MAY 7 1931.

DIRECTORS OF THE MAINE KENNEBEC BRIDGE

MAINE KENNEBEC BRIDGE
OVER
KENNEBEC RIVER
BETWEEN THE TOWNS OF
RICHMOND-SAGADAHOC CO.
AND
DRESDEN-LINCOLN CO.
TOLL HOUSE (No. 1) DETAILS

[redacted]. AUGUSTA, ME. MAY 1931.

REVISED JAN 1937.

33A of 33 (81) 13-37

0 1 2 3 4 5 INCHES

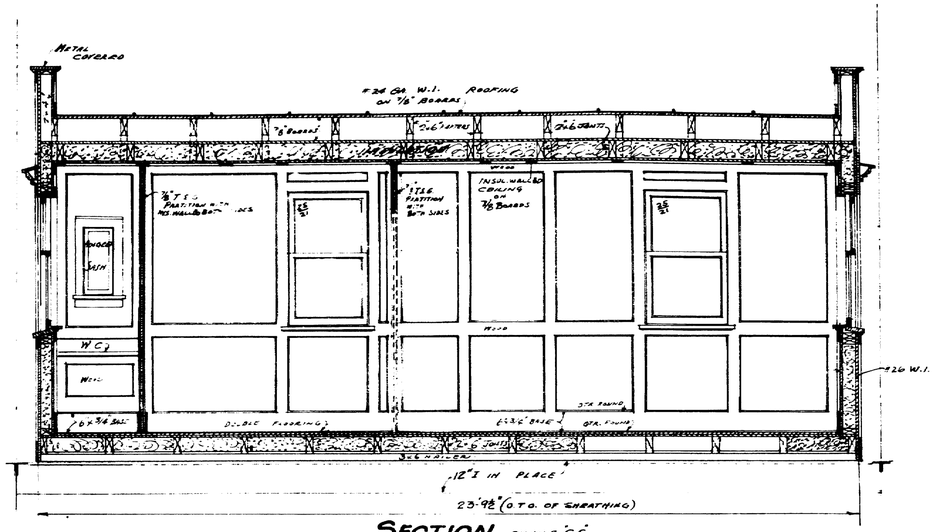

SECTION ON LINE "C-C"
(LOOKING UP-STREAM)

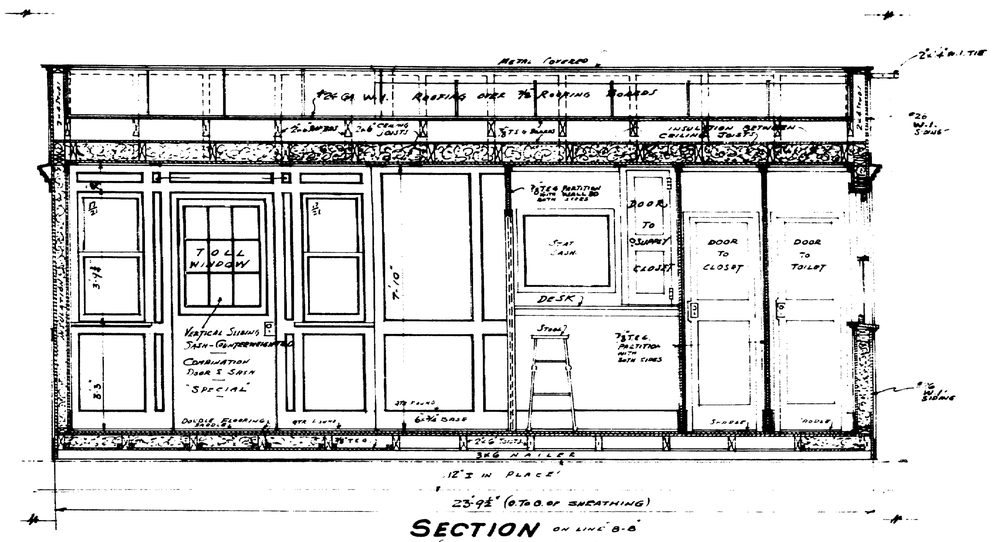

SECTION ON LINE "B-B"
(LOOKING DOWNSTREAM)

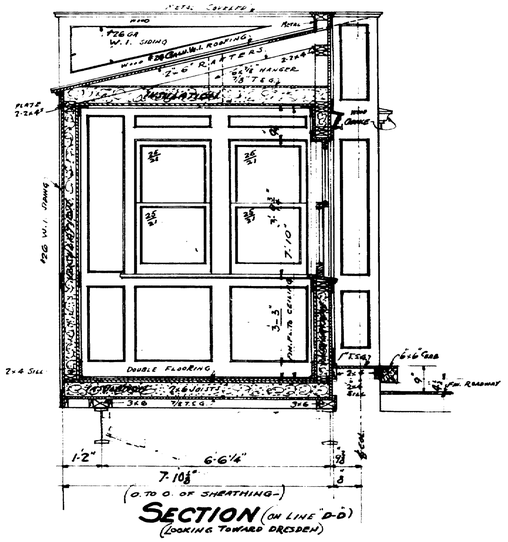

SECTION (ON LINE "D-D")
(LOOKING TOWARD DRESDEN)

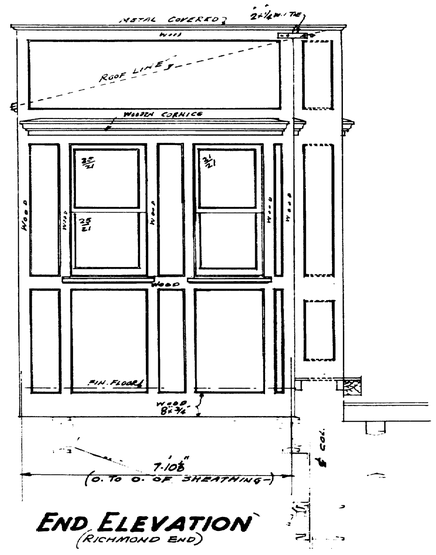

END ELEVATION
(RICHMOND END)

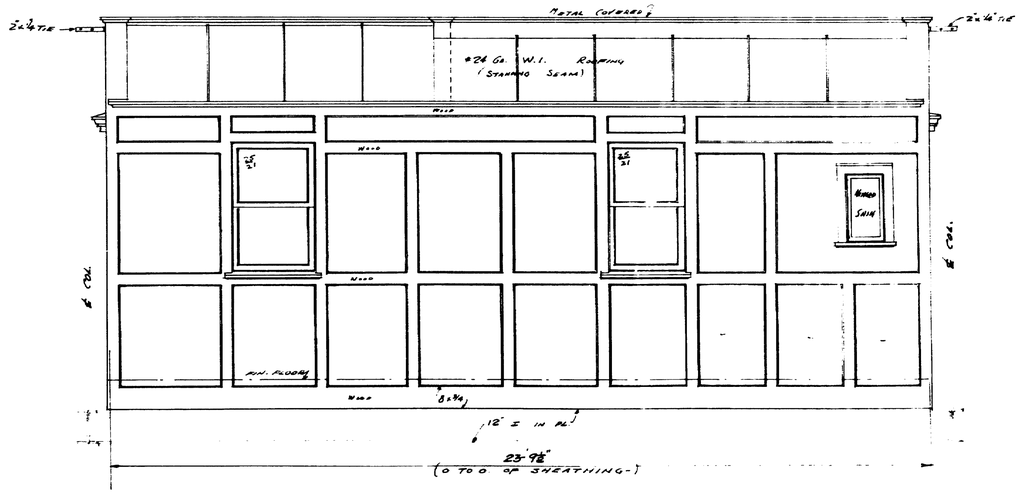

REAR ELEVATION
(LOOKING DOWNSTREAM)

ROOFING #24 GAL. W.I. (STANDING SEAM,
OUTSIDE WALL PANELS - #26 PLAIN W.I. SHEETS
INSIDE PANELS - INSULATED WALL BOARD.
COVER ROOF WITH BLACK WATERPROOF PAPER
BEFORE APPLYING METAL SHEETS

REVISED MAY 5TH 1931

DIRECTORS OF THE MAINE KENNEBEC BRIDGE

MAINE KENNEBEC BRIDGE
OVER
KENNEBEC RIVER
BETWEEN THE TOWNS OF
RICHMOND-SAGADAHOC CO.
AND
DRESDEN-LINCOLN CO.
TOLL HOUSE (No 1) DETAILS
SHEET [illegible] - AUGUSTA, ME. - [illegible]AY 1931.

REVISED JAN. 1937.

33B of 33

13-38

DRAWN BY [illegible]
TRACED BY [illegible]

0 1 2 3 4 5 INCHES

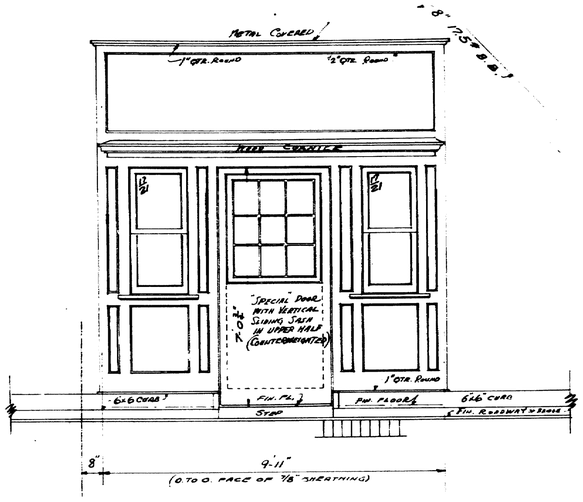

FRONT ELEVATION
(LOOKING DOWNSTREAM)

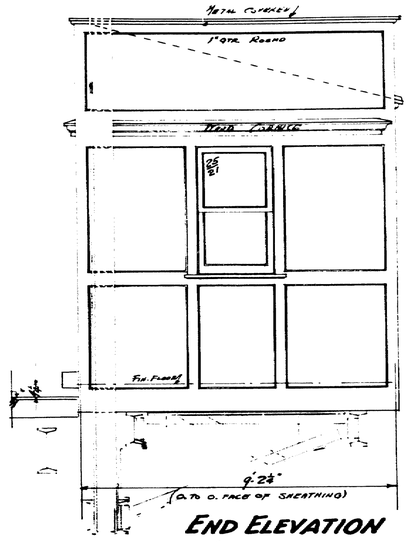

END ELEVATION
(RICHMOND END)

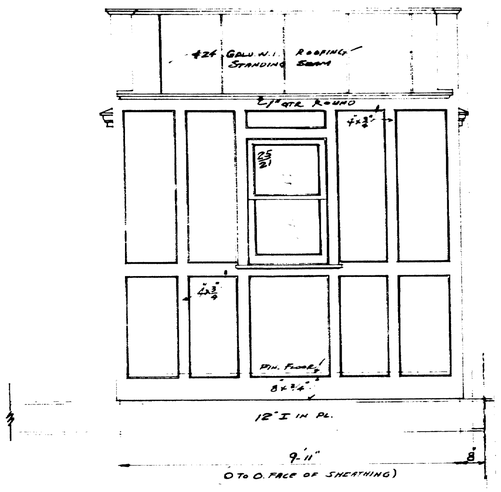

REAR ELEVATION
(LOOKING UPSTREAM)

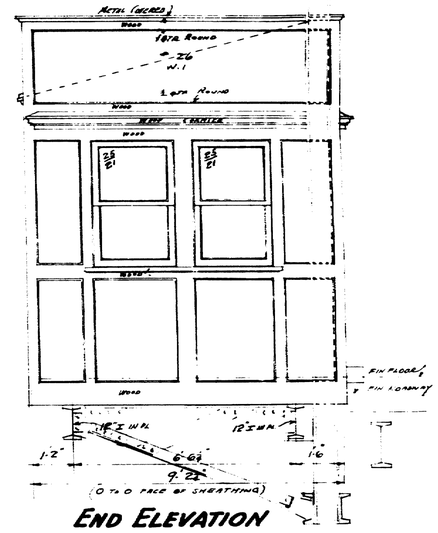

END ELEVATION
(DRESDEN END)

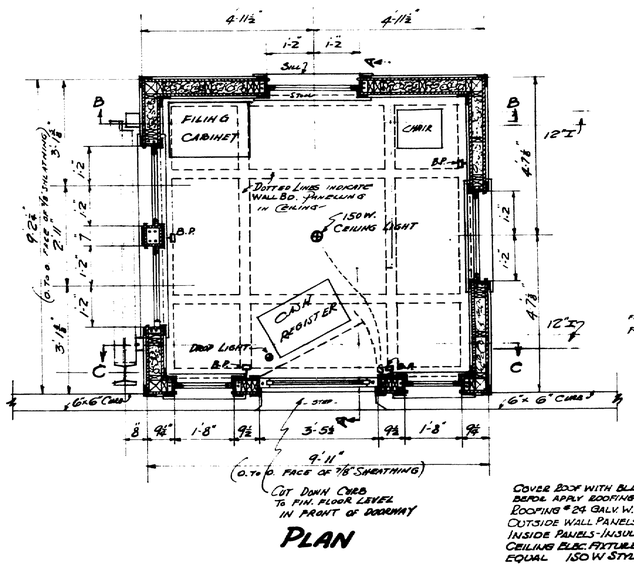

PLAN

COVER ROOF WITH BLACK WATER PROOF PAPER BEFORE APPLY ROOFING.
ROOFING #24 GALV. W.I. (STANDING SEAM)
OUTSIDE WALL PANELS - #26 PLAIN W.I. SHEETS
INSIDE PANELS - INSULATED WALL BOARD
CEILING ELEC. FIXTURE - WESTINGHOUSE OR EQUAL 150 W STYLE 343013

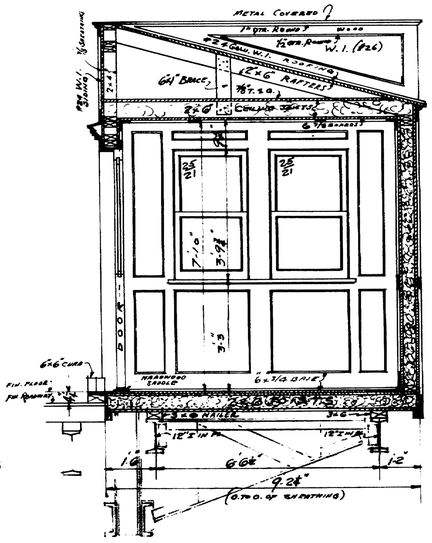

SECTION
(ON LINE "A-A")
(LOOKING TOWARDS DRESDEN)

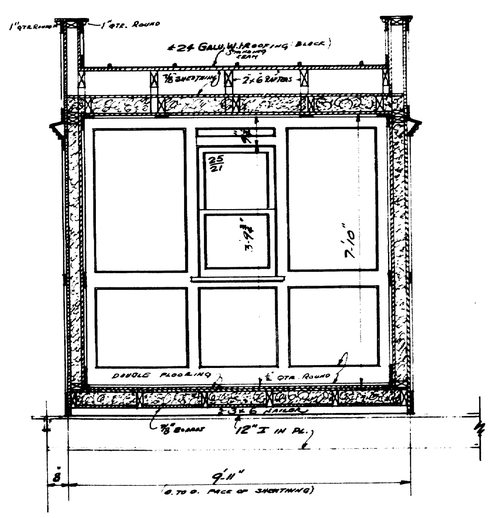

SECTION
(ON LINE "B-B")
(LOOKING DOWNSTREAM)

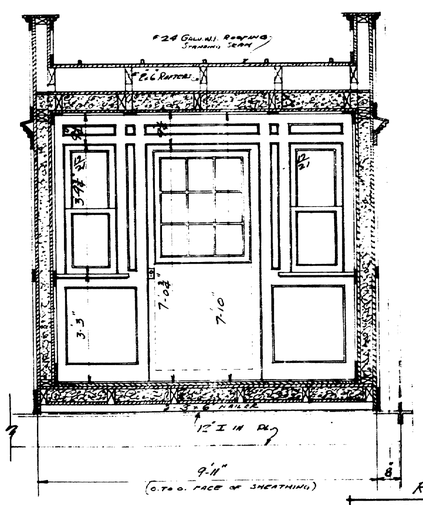

SECTION
(ON LINE "C-C")
(LOOKING UPSTREAM)

NOTE:- SEE SHEET No 25 (TOLL HOUSE No 1) FOR 1½" SCALE DETAILS OF CONSTRUCTION

SCALE ½" = 1'-0"

REVISED MAY 10TH 1931.

REVISED JAN. 1936

DIRECTORS OF THE MAINE KENNEBEC BRIDGE

MAINE KENNEBEC BRIDGE
OVER
KENNEBEC RIVER
BETWEEN THE TOWNS OF
RICHMOND-SAGADAHOC Co.
AND
DRESDEN-LINCOLN Co.
TOLL HOUSE (No 2) DETAILS
SHEET [illegible] AUGUSTA, MAINE MAY [illegible]

33C of 33 13-39

0 1 2 3 4 5 INCHES

MATERIAL LIST

TOLL HOUSE No. 2. — TOLL HOUSE No. 1.

ITEM	No. 2 QUANTITY	No. 2 DIMENSION	No. 2 APPROX. LENGTH	No. 2 MATERIAL	No. 2 APPROX. TOTAL No. SQ. FT. or LIN. FT.	No. 2 REMARKS	No. 1 QUANTITY	No. 1 DIMENSION	No. 1 APPROX. LENGTH	No. 1 MATERIAL	No. 1 APPROX. TOTAL No. SQ. FT. or LIN. FT.	No. 1 REMARKS
FLOOR JOISTS	6 Pcs	2"×6"	9'-0"	SPRUCE	54'-0"		5 Pcs	2"×6"	9'-0"	SPR.	45'-0"	WIDE PORTION OF BUILDING.
" "				"			8 "	"	8'-0"	"	64'-0"	NARROW " " "
CEILING "	5 "	2"×6"	9'-0"	"	45-0"	NOTCHED TO FIT OVER PLATE	5 "	"	9'-0"	"	45'-0"	WIDE " " "
" "				"			7 "	"	8'-0"	"	56'-0"	NARROW " " "
RAFTERS	5 "	2"×6"	9'-4"	"	47'-0"	" " " "	5 "	"	9'-6"	"	48'-0"	WIDE " " "
"							7 "	"	8'-0"	"	56'-0"	NARROW " " "
STUDDING	30 "	2"×4"	7'-9"	"	233'-0"	VERTICALS - FLOOR TO CEILING	56	"	7'-9"	"	434'-0"	VERTICALS - FLOOR TO CEILING -
"	22 "	" "	2'-6"	"	55'-0"	" PARAPET	50	2"×4"	2'-8"	"	134'-0"	IN PARAPET (ABOVE CEILING)
"	8 "	" "	2'-3"	"	20'-0"	TOPS + BOTTOMS OF 1'-8" WINDOWS	24	"	2'-10"	"	68'-0"	TOPS + BOTTOMS OF 2'-4" WINDOWS.
"	16 "	" "	2'-10"	"	46'-0"	" " " 2'-4"	4	"	2'-8"	"	11'-0"	" " " 2'-0" "
"	2 "	" "	3'-8"	"	7'-4"	TOP OF ENTRANCE DOOR	8	"	2'-3"	"	18'-0"	" " " 1'-8" "
							2	"	3'-8"	"	8'-0"	TOP OF ENTRANCE DOOR
MAIN SILL + PLATE	5 "	" "	9'-2"	"	46'-0"		3	"	13'-6"	"	41'-0"	
" " "	6 "	" "	8'-4"	"	50'-0"		6	"	11'-6"	"	69'-0"	
" " "	2 "	" "	2'-9"	"	5'-6"	SILL - EACH SIDE ENT. DOOR	3	"	9'-4"	"	28'-0"	
" " "							3	"	8'-4"	"	25'-0"	
" " "							3	"	7'-4"	"	22'-0"	
PLATE	8	" "	2'-0"	"	16'-0"	SUPPORTING ENDS OF RAFTERS	22	"	2'-0"	"	44'-0"	
"	2 "	" "	9'-0"	"	18'-0"	TOP OF PARAPET	2	"	8'-4"	"	17'-0"	SUPPORTING UPPER ENDS OF RAFTERS
"	1 "	" "	9'-10"	"	9'-10"	" " "	2	"	13'-6"	"	27'-0"	" " " "
"							1	"	8'-4"	"	8'-4"	TOP OF PARAPET
"							1	"	13'-6"	"	13'-6"	" " "
"							2	"	11'-6"	"	23'-0"	" " "
"							1	"	7'-4"	"	7'-4"	
"							1	"	8'-4"	"	8'-4"	
"							1	"	1'-0"	"	1'-0"	
"							2	"	14'-0"	"	28'-0"	
FLOORING SUPPORT							2	"	14'-0"	"	28'-0"	BETWEEN 6×6 CURB & BLDG. (TO SUPPORT BUILT-UP FLOORING)
CORNER POSTS	4 Pcs	4"×4"	10'-6"	"	42'-0"	TO TOP OF PARAPET	6	4"×4"	10'-6"	"	63'-0"	CORNER POSTS
CEILING JOIST HANGERS	5 "	6"×1"	1'-9"	"	9'-0"	BET. CEILING JOISTS & RAFTERS	12	6"×1"	1'-8"	"	20'-0"	CEILING JOIST HANGERS
JOIST & RAFTER BRACES	8 "	2"×6"	2'-0"	"	16'-0"	HORIZONTAL BRACES BET. RAFTERS & CEILING JOISTS	22	2"×6"	2'-0"	"	44'-0"	BRACES BETWEEN CEILING JOISTS & RAFTERS
NAILERS for FL. JOISTS	2 "	3"×6"	9'-9"	"	19'-6"	BOLTED TO 12" I BEAMS	4	3"×6"	12'-0"	"	48'-0"	"NAILERS" (BOLTED TO 12" I's)
SHEATHING -	—	8"×7/8" T.&G.		"	1150''	ALSO UNDER-FLOORING + "ROOFERS"	—	8"×7/8" T.&G.	—	"	2200''	SHEATHING - ROOFERS - UNDER FLOORING ETC.
FLOORING -	—	3½"×¾" T.&G.	—	HARDWOOD	80''	"FINISHED" (TOP) FLOORING -	—	3½"×¾" T.&G.	—	HARDWOOD	190''	"FINISHED" or TOP FLOORING -
"	—		—				—	4"×1" T.&G.		HARD PINE	22''	BETWEEN 6"×6" CURB + BUILDING -
INTERIOR "TRIM"	—	3½"×¾"	—	W. PINE	275'-0"	INCLUDES STRIPS OVER JOINTS		3½"×¾"	—	W. PINE	525'	WINDOW & DOOR CASINGS, ETC.
" "		6"×¾"	—		30'-0"	"BASEBOARD"		6"×¾"		"	65'	BASEBOARD (INTERIOR)
WINDOW STOOL	—	4×1⅛"	—	"	18'-0"	"2½"		4"×1⅛"	—	"	30'	WINDOW "STOOL"
WINDOW & DOOR "STOP"	—	2½"×½"	—	"	85-0	½		2½"×½"	—	"	125'	WINDOW & DOOR "STOP"
QTR. ROUND MOULDING	—	½"	—	"	345-0	INTERIOR		½"	—	"	730'	QUARTER ROUND MOULDING -
" " "	—	½"	—	"	365-0"	EXTERIOR		½"	—	"	730'	" " "
" " "		1"	—	"	65'-0"	"		1"	—	"	115'	" " "
EXTERIOR "TRIM"		7"×¾"		"	6	1 PER VERTICAL MEMBERS - PARAPET		7"×¾"		"	6	REAR VERTICAL MEMBER - PARAPET -
" "	—	4"×¾"	—	"	315'-0"	INCLUDES CASING AROUND WINDOWS & DOORS, STRIPS OVER JOINTS, ETC.		4"×¾"	—	"	490'	EXTERIOR TRIM
" "	—	8"×¾"	—	"	40'-0"	"BASEBOARD" (EXTERIOR)		8"×¾"	—	"	64'	BASEBOARD (EXTERIOR)
" "	—	4"×¾"	—	"	28'-0"	TOP MEMBER OF CORNICE		4"×¾"	—	"	40'	"BUILT-UP" CORNICE MEMBER
" "	—	2"×¾"	—	"	28'-0"	VERTICAL " "		2"×¾"	—	"	40'	" " " "
" "	—	SEE DETAIL SHEET #26	—	"	28'-0"	MOULDING " "		SEE DETAIL SHEET #26	—	"	40'	" " " "
	9 SHEETS	4'-0"×8'-0"			288'-0"	WALLS, CEILING, ETC. EXCLUDING PARTITIONS	25 SHEETS	4'-0"×8'-0"			800''	INSUL. WALL BOARD
BRACES BETWEEN FL. JOISTS	5 Pcs.	2"×6"	2'-0"	SPRUCE			12 PCS.	2"×6"	2'-0"	SPR.		
										PAPER	104 SQ. FT.	FOR ROOF - BLACK WATERPROOF
SIDING	2 SHEETS	2'-6"×8'-0"	—	#26 W.I. BLACK (NOT GALVANIZED)			3 SHEETS	2'-0"×8'-0"		#26 W.I. (BLACK)	TOTAL 536''	SIDING -
"	4 "	3'-0"×8'-0"	—	" " "	TOTAL		12	2'-6"×8'-0"		" " "		
"	7 "	3'-0"×10'-0"	—	" " "	340''		7 "	3'-0"×8'-0"				
"							3 "	3'-0"×10'-0"				
ROOFING	5 SHEETS	2'-6"×10'-0"	—	#24 W.I. GALVANIZED	125''		5 "	2'-6"×8'-0"		#24 W.I. GALV.	TOTAL 200''	ROOFING -
"				PAPER	81 SQ. FT.	FOR ROOF - BLACK WATERPROOF	4 "	2'-6"×10'-0"		" " "		
SASH (DOUBLE HUNG)	4	2'-4"×3'-11"	—	W. PINE		1⅜" THICK - GLAZED WITH DOUBLE THICK SHEET GLASS	6	2'-4"×3'-11"		W. PINE	—	DAYLIGHT OPENING SIZE GIVEN
" "	2	1'-8"×3'-11"	—	" "		" " "	1	2'-0"×11"		"	—	" " " "
" "						" " "	2	1'-8"×11"		"	—	" " " "
" (HINGED)	—	—	—	—		" " "	1	1'-0"×2'-0"		"	—	HINGED TO SWING OUT (IN W.C.)
STORM SASH	—	—	—	—		2 LIGHTS - 1⅜" THICK - GLAZED WITH DOUBLE THICK SHEET GLASS	6	2'-4"×3'-11"		"	—	ALL TO HAVE "VENTILATORS"
" "	—	—	—	—		" " "	1	2'-0"× "		"	—	" " " "
" "	—	—	—	—			2	1'-8"× "		"	—	" " " "
WINDOW FRAMES						FOR DOUBLE HUNG SASH	6	2'-4"× "		"	—	
" "							1	2'-0"× "		"	—	
" "							2	1'-8"× "		"	—	
DOOR FRAME	1	3'-5½"×7'-0¾"	—			FOR MAIN ENT. (TOLL) DOOR	1	3'-5½"×7'-0½"		"	—	SEE PLANS
ENTRANCE (TOLL) DOOR	1	" "				SPECIAL DOOR WITH VERTICAL SLIDING SASH	1					
ENT. DOOR LOCK SET	1	COMPLETE				SPECIAL - SEE DRAWING -	1	LOCK SET FOR MAIN ENT. DOOR				SPECIAL - SEE ENT. DOOR
" " BUTTS	1½ PAIRS	4"×4"				LOOSE PIN - STEEL. BRZ. PLATED	1½ PAIR	4"×4" BUTTS	"	"		LOOSE PIN - STEEL BRONZE PLATED
SASH FASTENERS	6 REQD.	—					9 REQD.			STEEL BRZ. PLATED		FOR DOUBLE HUNG SASH
" "							1 REQD.			" "		" HINGED SASH
SASH WEIGHTS	26 REQD.	—	—	CAST IRON		FOR D.H. SASH AND SASH IN ENT. DOOR	38 REQD.			CAST IRON		FOR D.H. SASH AND SASH IN ENTRANCE DOOR
SASH CORD	70 LIN. FT.		—		70 LIN. FT.	" " " " " "	100 LIN. FT.				100 LIN. FT.	
ENT. DOOR SADDLE	1 REQD.	3'-8"×6"×5/8"	—	OAK	—		1 REQD.	3'-8"×6"×5/8"		OAK		
INSULATION	155 CU. FT.	—		MIN. WOOL		APPROVED MAKE	277 CU. FT.			MINERAL WOOL	277 CU. FT.	BET. STUDS, JOISTS, ETC.
ELECTRIC FIXTURES	1 REQD.	150 WATT "CEILING FIXTURE" WESTINGHOUSE OR EQUAL STYLE 343013					1 REQD.	150 WATT "CEILING FIXTURE" WESTINGHOUSE OR EQUAL STYLE 343013				
" "							1 "	100 " " " " " " " 343012				
" "	1 REQD.	DROP LIGHT - PULL CHAIN - 50 WATT.					4 "	DROP LIGHTS - PULL CHAIN TYPE - 50 WATT.				
" BASE OUTLETS	4 "	DOUBLE TYPE - IN BASEBOARD - STEEL - BRONZE PLATED -					6 "	DOUBLE TYPE - IN BASEBOARD - STEEL - BRONZE PLATED				
SWITCH	1 "	OPERATING CEILING LIGHT -					1 "	OPERATING 2 CEILING LIGHTS -				
BOLTS FOR 3"×6" NAILERS	14 REQD.	4"×7/8"				ROUND HEAD "CARRIAGE BOLTS"	30 "	4"×7/8" ROUND HEAD "CARRIAGE BOLTS.				
LAG SCREWS							2 "	3" LONG FOR SECURING 2½"×¼" W.I. TIE TO BUILDING -				
MACHINE BOLTS							2 "	2"×5/8" SQ. HEAD, FOR BOLTING 2½"×¼" W.I. TIE TO COLUMN				
WROUGHT IRON "TIE"							1 "	2½"×¼" BENT AS SHOWN				
CHAIRS	2 REQD.						3 "	STANDARD "OFFICE" FURNITURE TYPE.				
STOOLS							1 "	FOR USE IN "OFFICE"				
CASH REGISTER	1 REQD.						1 "	"SPECIAL" (NATIONAL CASH REGISTER) TYPE FOR TOLL HOUSES.				
STEEL FILING CABINET							1 "	SHAW-WALKER TYPE - SIMILAR TO THOSE IN BATH-WOOLWICH TOLL HOUSE.				
SAFE							1 "	SIZE APPROX. 1'-10"×1'-10"×3'-6"				
HEATER							1 "					
DESK							1 "	FLAT TOP				
CLOCK							1 "					
TYPEWRITER							1 "					
TELEPHONE							1 "	DESK TYPE				
DRINKING WATER OUTFIT							1 "	5 GALLON BOTTLE WITH ICE COOLER BELOW				
							ONE	ENAMELED IRON LAVATORY WITH DRAIN THRU FLOOR - 17"×19" EQUAL TO W.L. BLAKE No. 335				

NOT TO BE INCLUDED IN THIS CONTRACT (Chairs through Drinking Water Outfit)

DRAWN BY
TRACED BY

REVISED JAN. 1932.

SECTION
(ON LINE "E-E")
(LOOKING DOWNSTREAM)

SECTION
(ON LINE "F-F")
(LOOKING TOWARD RICHMOND)

MATERIAL LIST FOR PARTITIONS ENCLOSING OFFICE WATER CLOSET, ETC.

ITEM	QUANTITY	SIZE	LENGTH	MATERIAL	REMARKS
7/8 T.&G. BOARDS	240''	-	-	SPRUCE or HEMLOCK	for PARTITIONS
INSUL. WALL BOARD	14 SHEETS	4'0"×8'0"		—	" "
TRIM (INCL. STRIPS OVER WALL BD. JOINTS)	300 LIN. FT.	3"×¾"	-	W. PINE	" "
BASE	40 " "	6"×¾"	—	"	" "
SHELVES	14 " "	10"×¾"	-	" "	
W.C. MATERIAL	24 " "	8"×¾	—		T.&G.
" " "	20 " "	2"×4"			S 4 S.
"DESK" MATERIAL	8 " "	10"×¾"		"	T.&G.
" "	6 " "	4"×¾"		" "	
" "	12 " "	1" QTR. ROUND	-	" "	
½" QTR. ROUND MOULDING	350 " "	½"	—	" "	
SASH (STATIONARY)	1 REQD	10"×24"	-	" "	1⅜ THICK GLAZED WITH S.T. GLASS.
" "	1 "	26"×24"	—	" "	" "
DOORS	3 "	2'0"×6'4"	-		2 PANEL - 1⅜ THICK.
DOOR "STOP"	54 LIN. FT.	1¾"×½"			
HARDWARE	3 MORTISED LOCK SETS (COMPLETE) STEEL - BRZ. PLATED				
"	1 LATCH FOR SUPPLY CLOSET DOOR. " "				
"	3 PR BUTTS 3½"×3½" LOOSE PIN - STEEL BRZ. PLATED.				
"	1 " " 2"×2" FOR SUPPLY CLOSET DOOR				
"	1 DOZ. COAT HOOKS				
STRIP (UNDER SHELVES DESK, ETC.)	40 LIN. FT.	2"×¾"		W. PINE	

F·S·SECTION THRU JAMB
OF STATIONARY SASH IN PARTITIONS

F·S·SECTION THRU JAMB
OF DOORS IN PARTITIONS ENCLOSING "OFFICE," ETC.

REVISED MAY 16 1931.

DIRECTORS OF THE MAINE KENNEBEC BRIDGE

MAINE KENNEBEC BRIDGE
OVER
KENNEBEC RIVER
BETWEEN THE TOWNS OF
RICHMOND - SAGADAHOC CO.
AND
DRESDEN - LINCOLN CO.
TOLL HOUSE DETAILS MATERIAL LIST
SHEET No. [illegible] AUGUSTA ME. MAY 1931.

33D of 33 — 13-40

0 1 2 3 4 5 INCHES

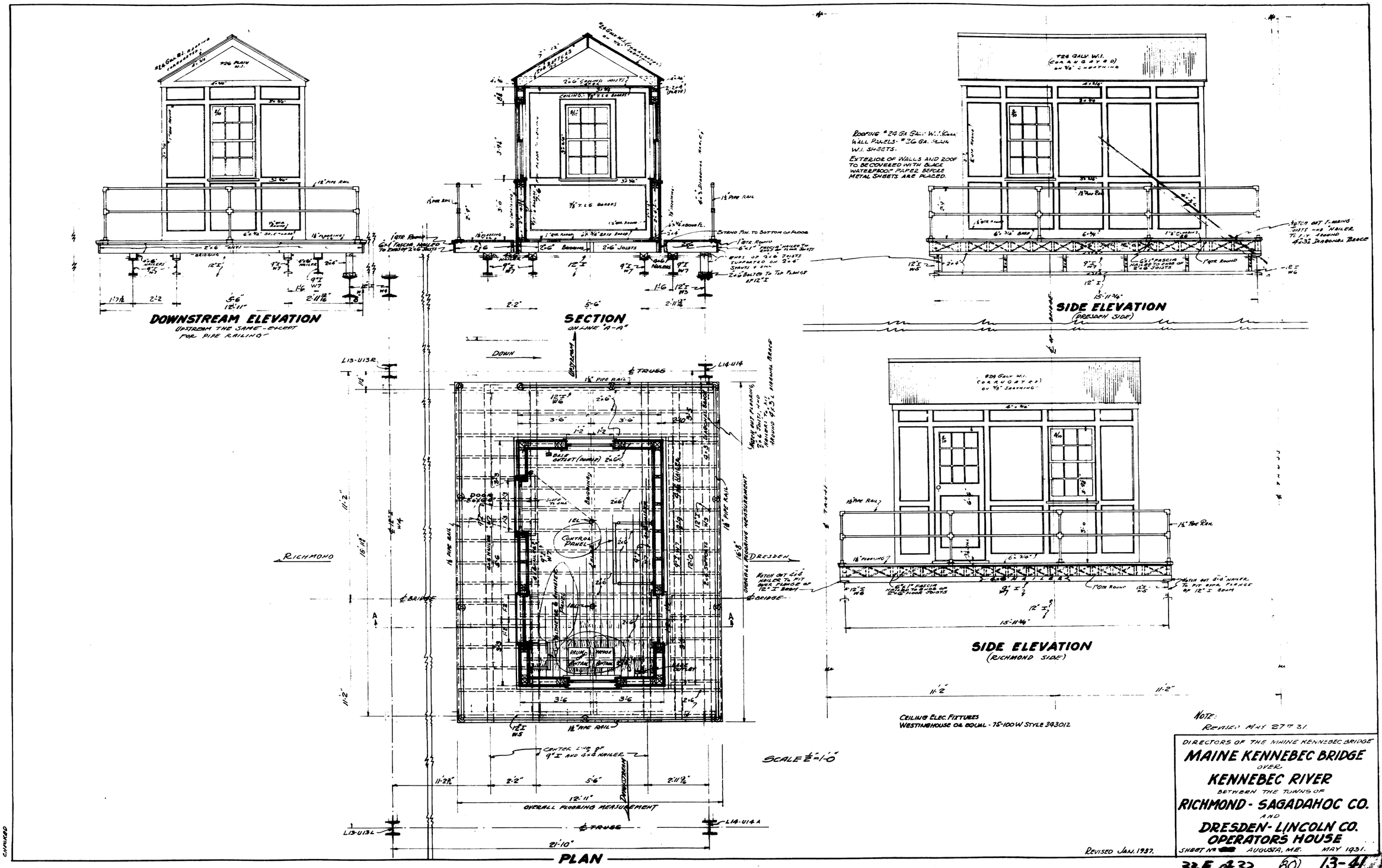
DOWNSTREAM ELEVATION
UPSTREAM THE SAME - EXCEPT FOR PIPE RAILING
SECTION
ON LINE "A-A"
SIDE ELEVATION
(DRESDEN SIDE)
SIDE ELEVATION
(RICHMOND SIDE)
PLAN
RICHMOND
DRESDEN
DOWN
CONTROL PANEL
OVERALL FLOORING MEASUREMENT
SCALE 1/2"=1'-0"
CEILING ELEC. FIXTURES
WESTINGHOUSE OR EQUAL - 75-100W STYLE 343012
NOTE:
REVISED MAY 27TH 31.
DIRECTORS OF THE MAINE KENNEBEC BRIDGE
MAINE KENNEBEC BRIDGE
OVER
KENNEBEC RIVER
BETWEEN THE TOWNS OF
RICHMOND - SAGADAHOC CO.
AND
DRESDEN - LINCOLN CO.
OPERATORS HOUSE
SHEET No. [redacted] AUGUSTA, ME. MAY 1931.
REVISED JAN. 1937.
33 E of 33
80
13-41

MATERIAL LIST

OPERATORS HOUSE
SEE SHEET No 29 FOR PLANS & ELEVATIONS

ITEM	QUANTITY	DIMENSION	APPROX LENGTH	MATERIAL	APPROX TOTAL SQ FT OR LIN FT	REMARKS
CEILING JOISTS	7	" "	6'-10½"	"	47.0"	
RAFTERS	7	" "	4'-2"	"	30:0	
RIDGE BOARD	1	1"x6"	6'-10½"	"	7'.0"	
STUDDING	33	2"x4"	7'-5"	"	245.0"	VERTICAL (KILL TO PLATE)
" "	16	"	2'-9"	"	44'.0"	HEADS & SILLS OF WINDOWS
"	2	"	2'-8½"	"	5'.6"	HEAD OF DOORWAY
"	4	"	2'-3"	"	10'.5"	VERTICAL UNDER RISING SILL
SILL	2	"	11'-10½"	"	24'.0"	SIDES
"	2	"	6'-3"	"	13'-0"	ENDS
PLATE	4	"	11'-10½"	"	48'.0	SIDES
"	4	"	6'-3"	"	25'.0"	ENDS
CORNER POSTS	4	4"x4"	7'-1"	"	29'.0"	
"NAILERS"	3	4"x6"	16'0"	"	50'.0"	NAILED TO TOP FLANGE OF [illegible]
SUPPORT UNDER 2"x6" RAISED SECTION SILL	1	2"x8"	16'-6"	"	16'.6"	UPPER HORIZONTAL PIECE
" " " " "	1	2"x6"	16'.0"	"	16'.0"	BLOCK TO 18" I BEAM
" " " "	6	2"x8"	10'-2"	"	56'.6"	VERTICALS
BRIDGING	60	2"x8"	1'.0"	"	60'.0"	
"FASCIA"	2	6"x1"	16'-6"	N. PINE	33'.0"	NAILED TO ENDS OF RAFTERS
FLOORING	670 SQ FT	4"x⅞"	MATCHED, LENGTHS VARIOUS	" "	670.0"	T & G
SHEATHING	700 SQ FT	8"x⅞"	16'-5"	SPRUCE	700"	BOTH SIDES OF ROOF
INTERIOR & EXTERIOR TRIM	370 LIN FT	3"x¾"		N. PINE	370 LIN FT	
" " " "	80 LIN FT	6"x¾"		"	80 "	BASEBOARD
EXTERIOR TRIM AT PAVES.	40 "	4"x¾"		"	40 "	ALSO AT GABLE ENDS.
WINDOW STOOL	12 "	4"x1⅛"	WINDOWS 3'-3" LONG	"	12 "	
WINDOW & DOOR "STOP"	50 "	2¼"x⅞"		"	50 "	
ENTRANCE DOOR SILL	1 REQD.	7" WIDE	3'.0"	HARDWOOD		SEE DETAIL
DOUBLE HUNG SASH	4 PAIR	28"x3'-9"		N. PINE		16 LIGHT - 1½" THICK LOADED WITH LEAD PER WINDOW GLASS
WINDOW FRAMES	4 REQD	FOR ABOVE SASH				
ENTRANCE DOOR	1 REQD.	36"x6'6"				1¾" THICK, 2 PANEL, 9 LIGHTS
DOOR FRAME	" "	FOR ABOVE DOOR				STOCK FRAME
QUARTER ROUND MOULDING	140 LIN FT	1"		N. PINE	140 LIN FT.	
" " "	600 " "	½"			600 " "	FRAME DOOR & WINDOW TRIM
SIDING	3 SHEETS	2'-6"x8'-0"				
"	10 "	2'-6"x8'-0"			272 SQ FT	GABLE ENDS & SIDES OF DORMER
"	1 "	3'-0"x8'-0"				SEE SHEET NO 27 FOR LOCATIONS
ROOFING	12 "	27½"x60"			138 SQ FT.	
SASH WEIGHTS	16 LBS EA.			CAST IRON		FOR DOUBLE HUNG SASH.
" FASTENERS	4 "			STEEL GALVD PLATES		" " "
ENTRANCE DOOR LOCK SET	1 "	(COMPLETE (MORTISED LOCK, KNOBS - ESCUTCHEONS, ETC.)				
" " BUTTS	2 REQD.	3½"x3½"		LOOSE PIN TYPE - STEEL - BRONZE PLATED		
SASH CORD	50 LIN FT.					ANNEALED PARKE.
ELECTRIC FIXTURES	2 REQD.	CEILING FIXTURES - OPERATORS ROOM				SWITCH NEAR DOOR.
SWITCH	1 "	FOR ABOVE CEILING LIGHTS.				
BASE OUTLETS	2 "					IN BASEBOARD - DOUBLE TYPE
BOLTS FOR NAILING STRIPS	18 "	⅜ DIA. 4½" Long -		ROUND HEAD	WITH SQUARE NUT.	" " " (INC 2"x6 NAILERS)
" " "	6 "	" " 3" Long -		" "	" "	" " " (INC 2"x6 NAILERS)
" " PIPE RAIL STANCHIONS	36 "	2" Long - ⅜" DIA. -		ROUND HEAD	WITH SQUARE NUT & WASHER.	
W.I. PIPE RAILING	54'.6"	2 - LINE 1½" PIPE -		GALVANIZED	58.6 SQ FT	SEE FLOOR PLAN FOR LAYOUT.
FLOOR JOISTS	9	2"x6	13'.0	SPRUCE	117 LIN FT.	
" "	12	2"x6	10'.0	"	120 " "	
" "	12	2"x6	4'.0	"	48 " "	
WATERPROOF BUILDING PAPER					340 SQ FT.	NET AREA

DRESDEN SIDE ELEVATION

RICHMOND SIDE ELEVATION

END ELEVATION
(BOTH ENDS)

DESIGNED
CHECKED
TRACED

REVISED JAN 1937.

DIRECTORS OF THE MAINE KENNEBEC BRIDGE

MAINE KENNEBEC BRIDGE
OVER
KENNEBEC RIVER
BETWEEN THE TOWNS OF
RICHMOND - SAGADAHOC CO.
AND
DRESDEN - LINCOLN CO.
FRAMING DETAILS AND MATERIAL LIST OF **OPERATORS HOUSE**
SHEET No [redacted]. AUGUSTA, ME. MAY 1931.

33F 423 13-42

0 1 2 3 4 5 INCHES

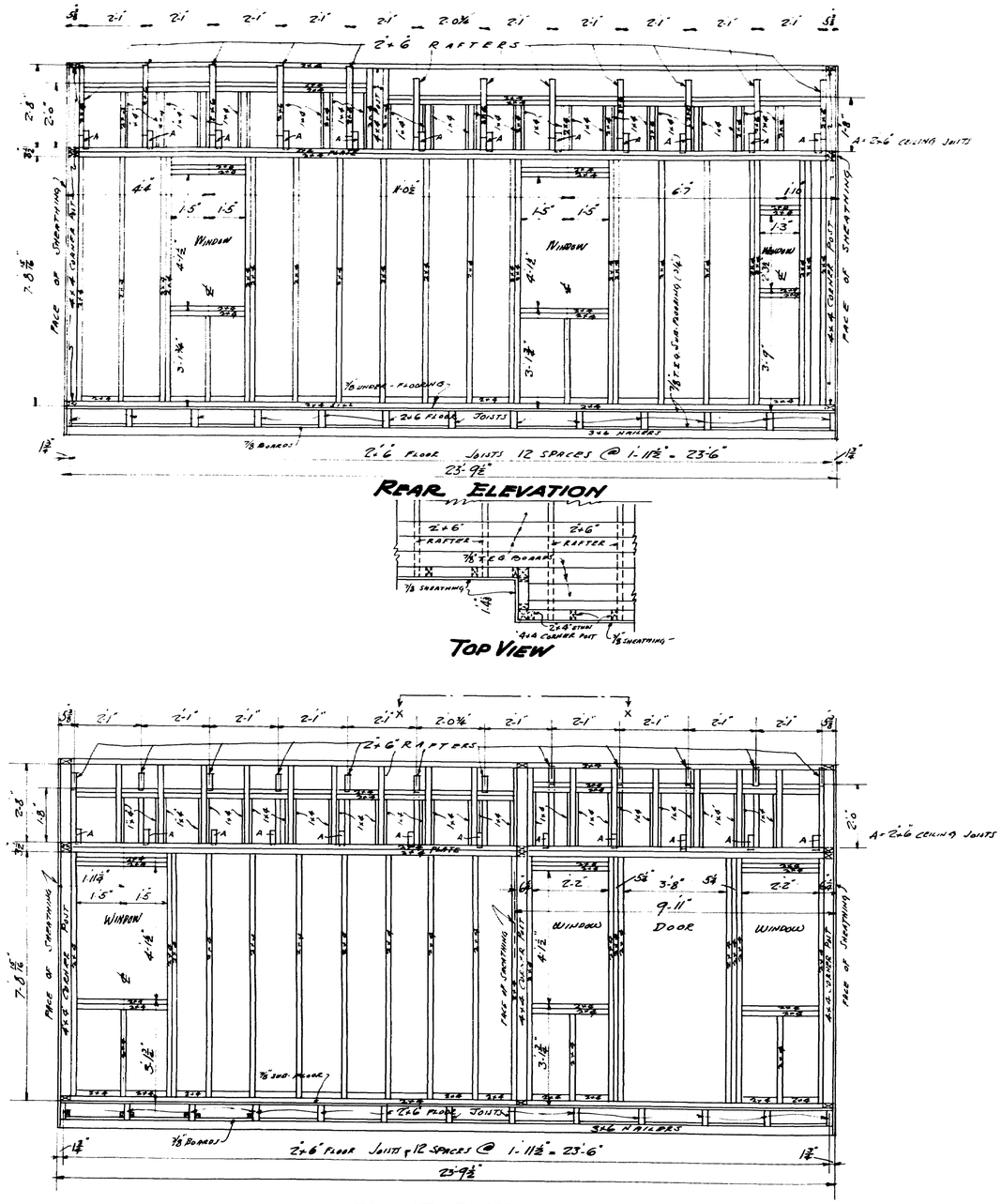

REAR ELEVATION

TOP VIEW

RICHMOND END ELEVATION

FRONT ELEVATION

DRESDEN END ELEVATION

DIRECTORS OF THE MAINE KENNEBEC BRIDGE

MAINE KENNEBEC BRIDGE

OVER

KENNEBEC RIVER

BETWEEN THE TOWNS OF

RICHMOND-SAGADAHOC CO.

AND

DRESDEN-LINCOLN CO.

TOLL HOUSE No 1-FRAMING PLANS

SHEET No [illegible] AUGUSTA, ME. - MAY 1931.

33 of 33 13-43

0 1 2 3 4 5 INCHES

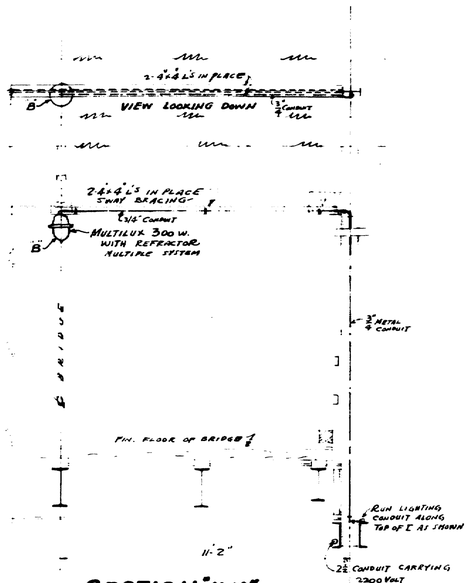

SECTION "K-K"

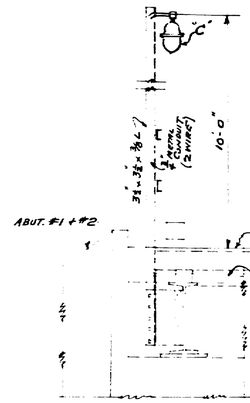

SECTION "Z-Z"

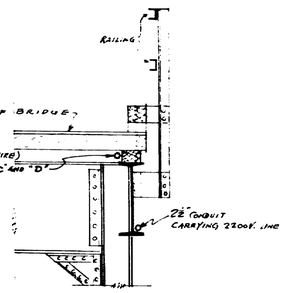

SECTION "D-D"

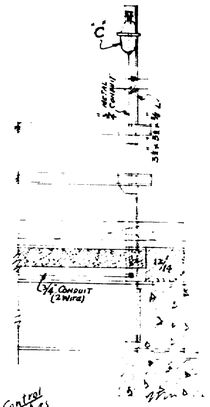

SECTION "F-F"

HOUSE WIRING Circuit 2 under

1 1/2" Conduit between Central and Tall Houses, limit switches will be as per contractor's wiring diagram.

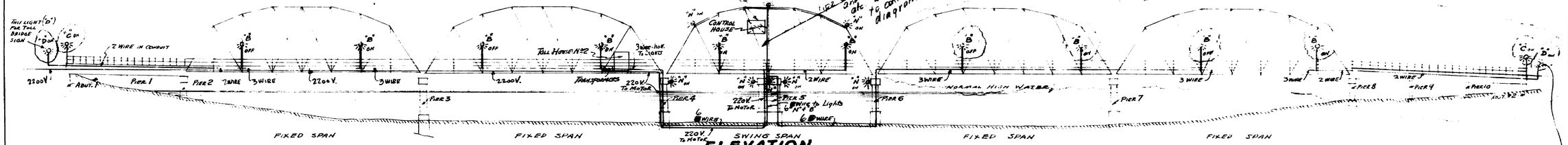

ELEVATION

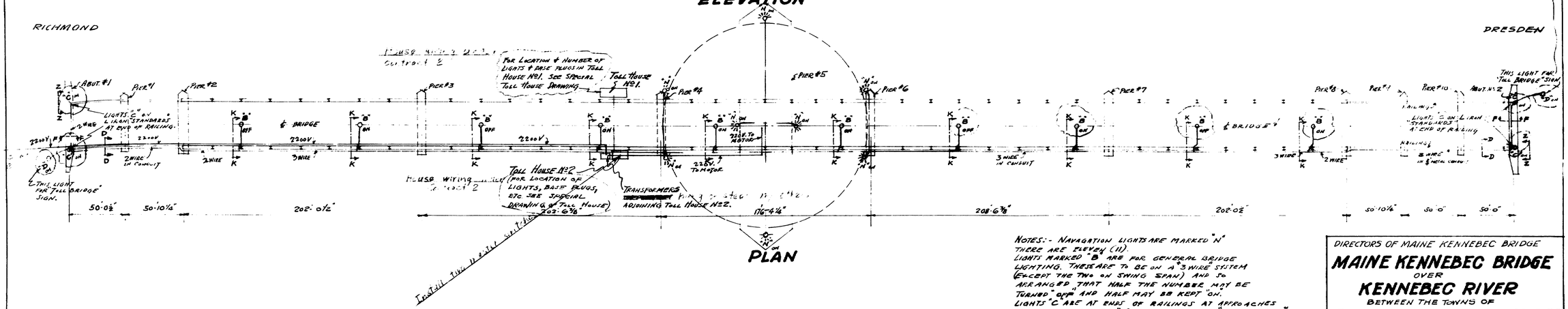

PLAN

NOTES:- NAVAGATION LIGHTS ARE MARKED "N" THERE ARE ELEVEN (11). LIGHTS MARKED "B" ARE FOR GENERAL BRIDGE LIGHTING. THESE ARE TO BE ON A "3 WIRE" SYSTEM (EXCEPT THE TWO ON SWING SPAN) AND SO ARRANGED THAT HALF THE NUMBER MAY BE TURNED "OFF" AND HALF MAY BE KEPT "ON". LIGHTS "C" ARE AT ENDS OF RAILINGS AT APPROACHES TO BRIDGE. LIGHTS "D" ARE FOR LIGHTING "TOLL BRIDGE" SIGNS AT EACH APPROACH. ALL THESE LIGHTS ARE TO BE OPERATED BY SWITCHES LOCATED IN TOLL HOUSE N°1.

Lights in place :-

DRAWN BY
TRACED BY

DIRECTORS OF MAINE KENNEBEC BRIDGE

MAINE KENNEBEC BRIDGE
OVER
KENNEBEC RIVER
BETWEEN THE TOWNS OF
RICHMOND-SAGADAHOC CO.
AND
DRESDEN-LINCOLN CO.
ELECTRICAL WIRING LAYOUT

SHEET 2 AUGUSTA ME. FEBY 31.

33 0;33 74) 13-44

0 1 2 3 4 5 INCHES

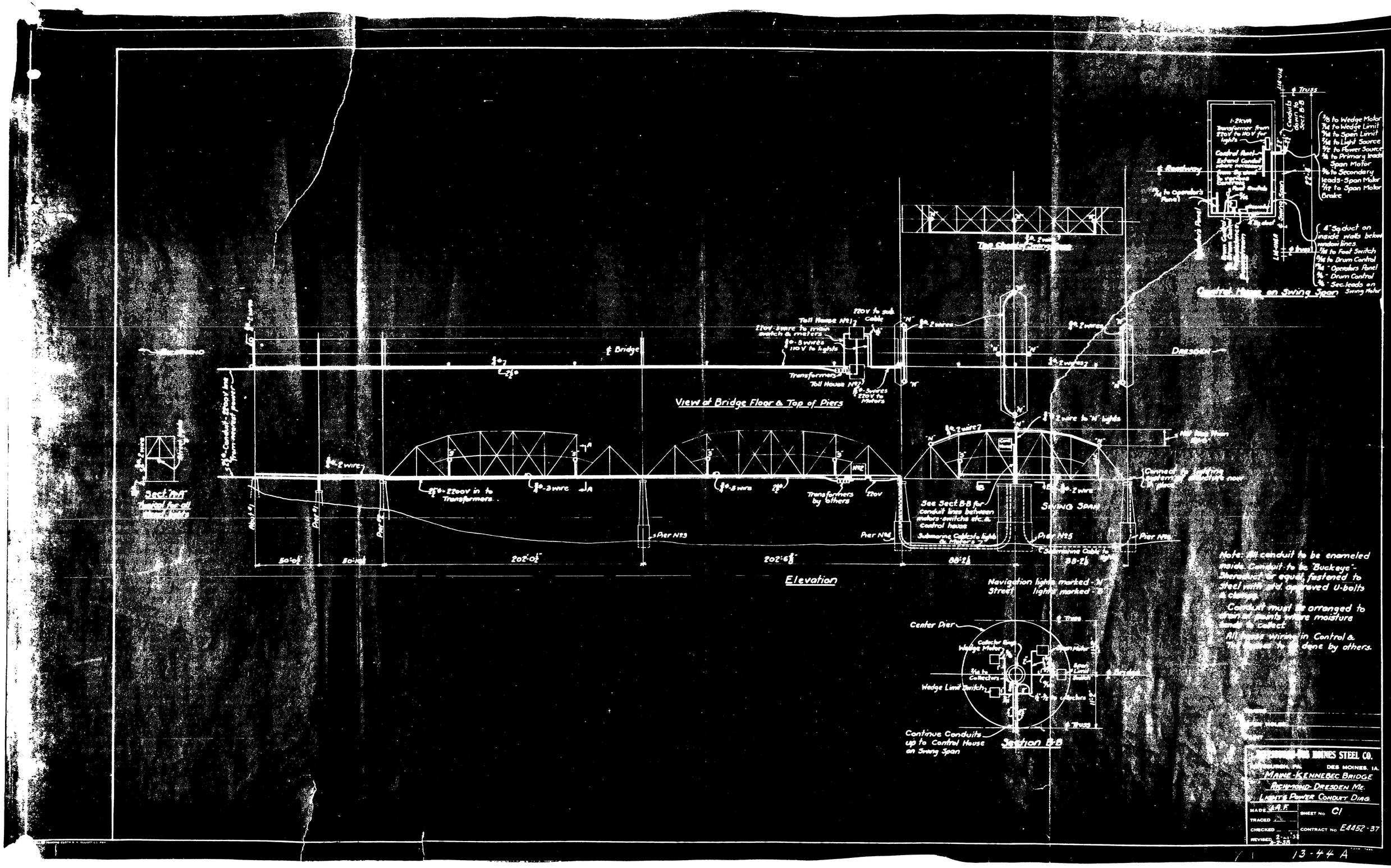

View of Bridge Floor & Top of Piers
Elevation
Section B-B
Control House on Swing Span
Center Pier
Wedge Limit Switch
Continue Conduits up to Control House on Swing Span
Navigation lights marked "N"
Street lights marked "B"
See Sect. B-B for conduit lines between motors-switches etc. & control house
Submarine Cables to lights & Motors
Transformers by others
Pier No 3
Pier No 4
Pier No 5
Pier No 6
Swing Span
Dresden
Toll House No 1
Toll House No 2
Transformers
220V to sub. cable
220V-3 wire to main switch & motors
3 wires 110V to lights
3 wires 220V to Motors
2 wire to "N" lights
Note: All conduit to be enameled inside. Conduit to be "Buckeye"-Sherasbury or equal, fastened to steel with approved U-bolts & clamps.
Conduit must be arranged to drain at points where moisture tends to collect.
All trees wiring in Control & Toll houses to be done by others.
DES MOINES STEEL CO.
DES MOINES, IA.
MAINE-KENNEBEC BRIDGE
RICHMOND-DRESDEN ME.
LIGHTS POWER CONDUIT DIAG.
MADE L.A.F.
TRACED
CHECKED
REVISED
SHEET No. C1
CONTRACT No. E4452-37
13-44 A

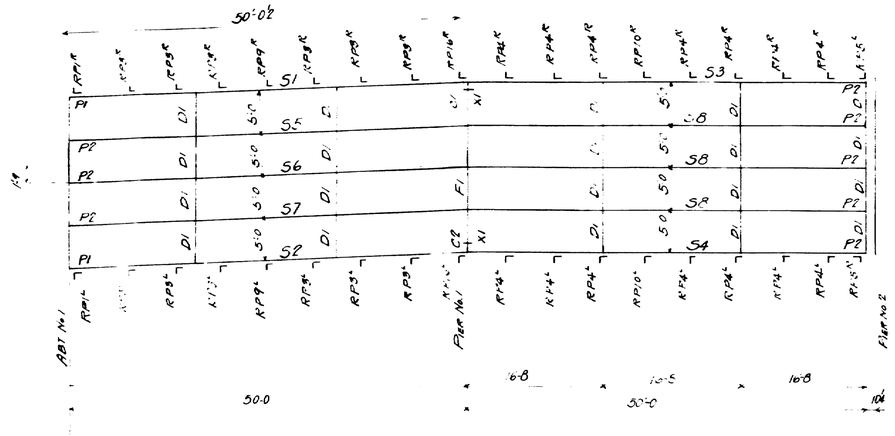

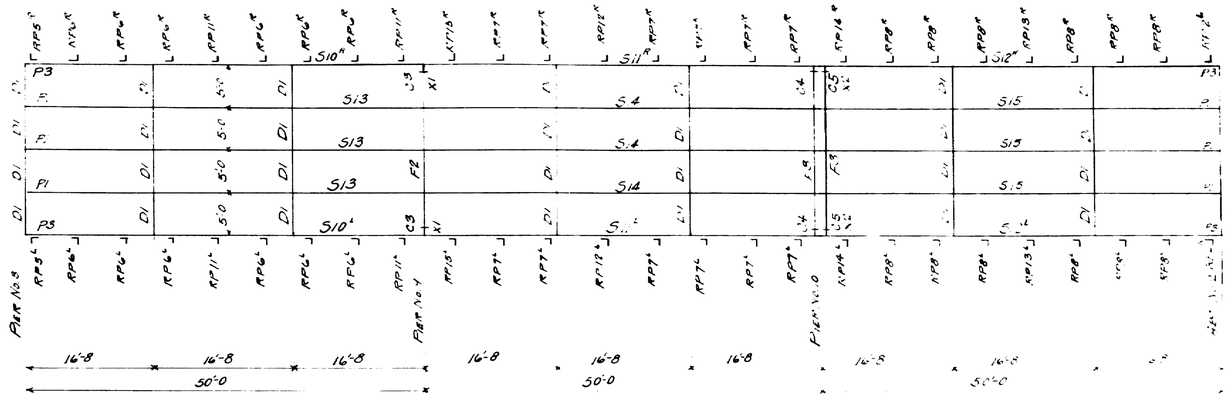

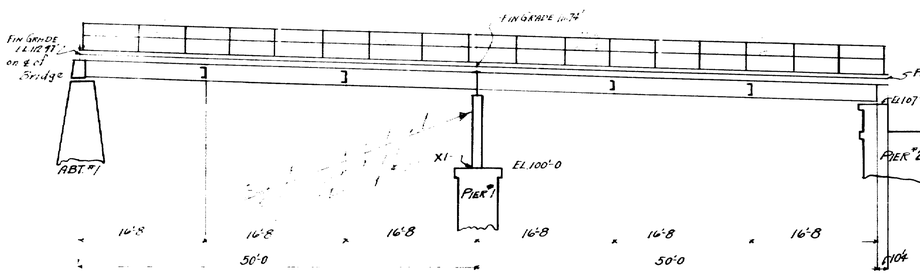

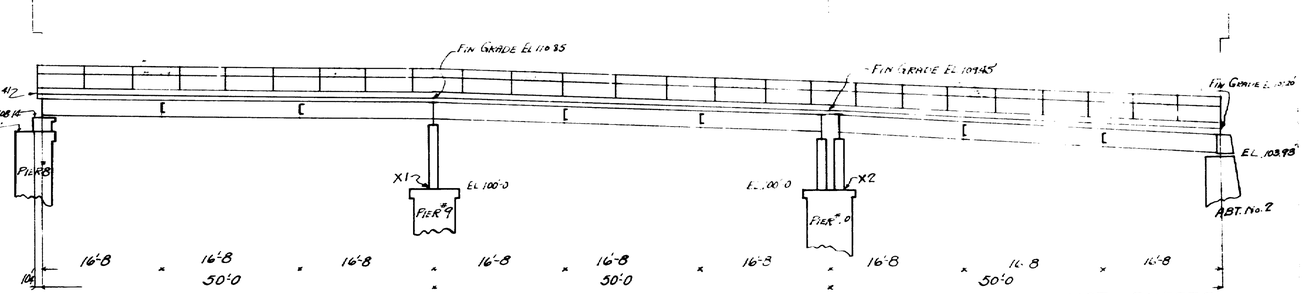

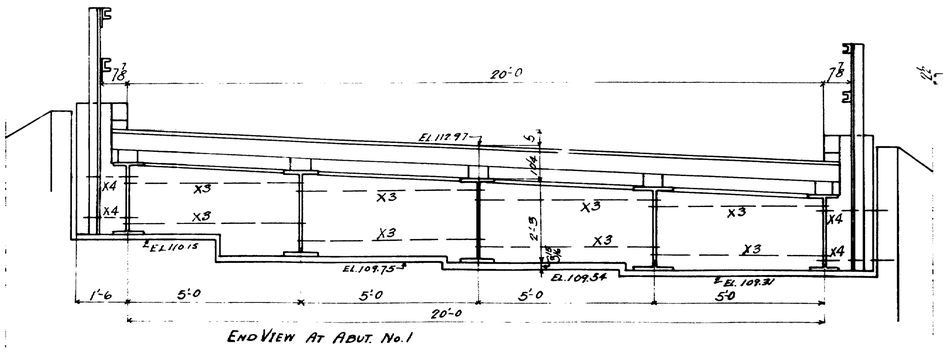

END VIEW AT ABUT. No.1

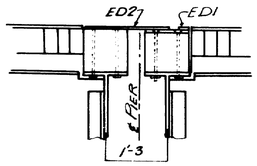

EXPANSION DAMS AT PIER 0

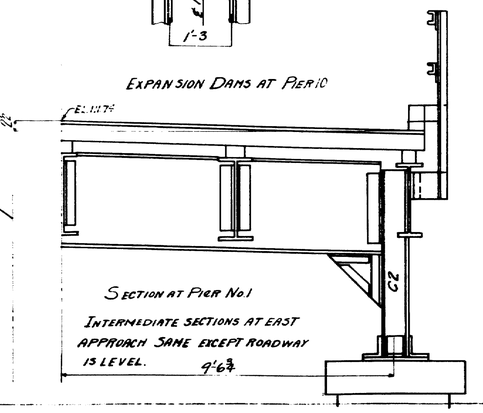

SECTION AT PIER No.1

INTERMEDIATE SECTIONS AT EAST APPROACH SAME EXCEPT ROADWAY IS LEVEL. 9'6¾

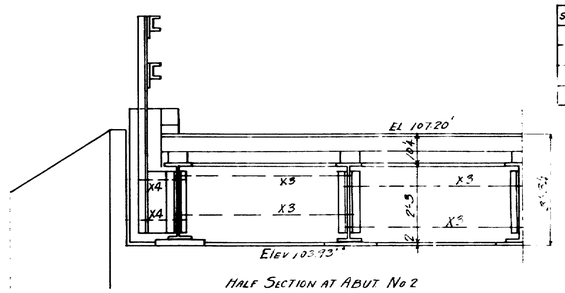

HALF SECTION AT ABUT No.2

LIST OF SHEETS

SH NO	CONTENTS
1	COLS & FLOOR BEAMS
2	STRINGERS
3	STRINGERS
4	MISCELLANEOUS

NOTES:
MATERIAL: O.H. Steel Card 855
SPECIFICATIONS: Maine State Highway Commission
INSPECTION: P.T.L.
ERECTION: A.B. Co.

RIVETS
OPEN HOLES

State of Maine
Maine Kennebec Bridge
over Kennebec River
between
Richmond & Dresden

AMERICAN BRIDGE CO.
AMBRIDGE PLANT

Dwgs. made at Ambridge No. 3 in charge of Canady
Detailed by AJV Date Checked by Date
Fin. comm. chk. by NBK Date 12-15-30
ORDER NO. G3820 SHEET NO. E1

13-4

0 1 2 3 4 5 INCHES

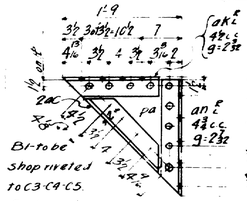

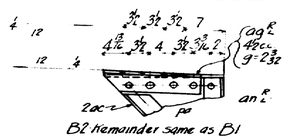

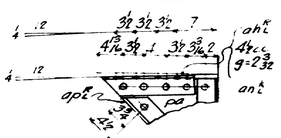

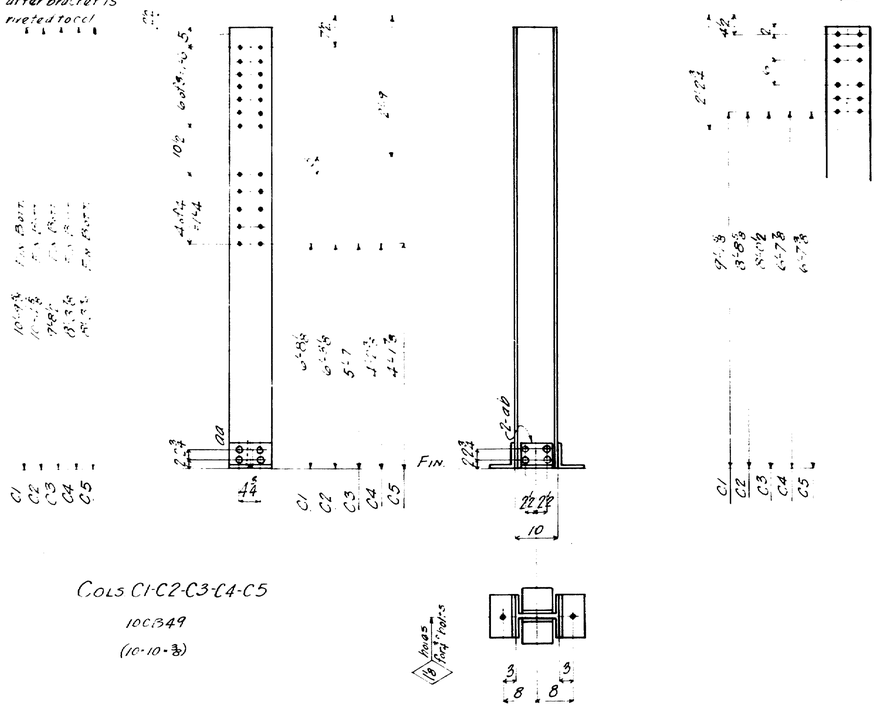

COLS C1-C2-C3-C4-C5

10CB49

(10-10-3/8)

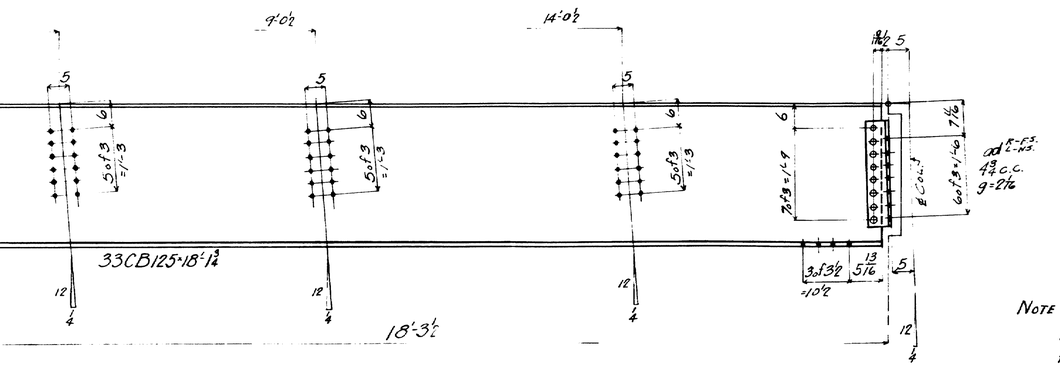

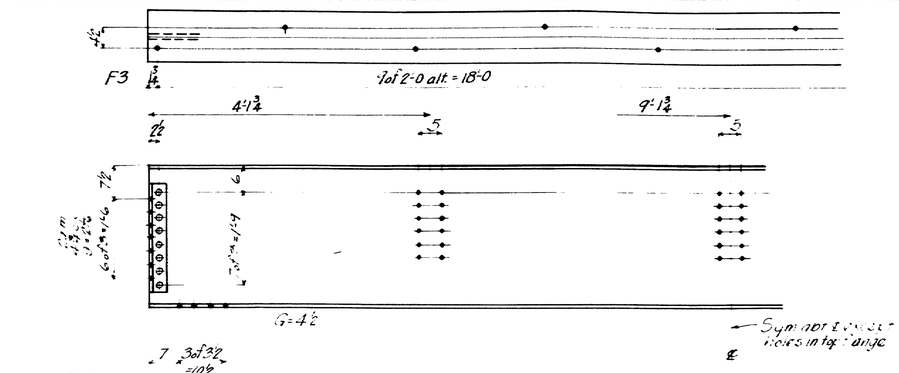

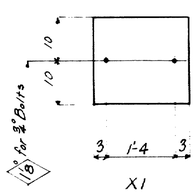

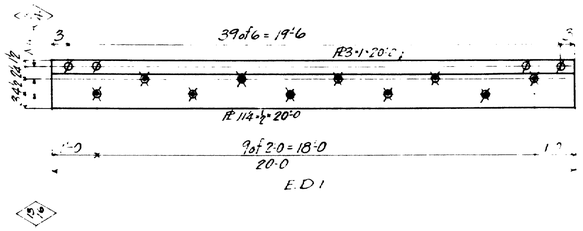

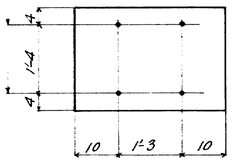

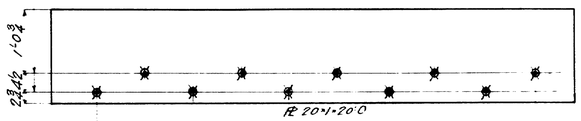

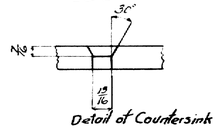

8 Co. C1-C2-C3-C4-C5

1	10 CB 49	10	9 5/8		C1 (Fin. Bott.)	10'-10	12
1	10 CB 49	10	4 5/8		C2 (Fin. Bott.)	10'-5	13
2	10 CB 49	9	8 1/2		C3 (Fin. Bott.)	9'-9	14
2	10 CB 49	8	3 5/8		C4 (Fin. Bott.)		
2	10 CB 49	8	3 5/8		C5 (Fin. Bott.)		
16	L 6 6 5/8		12	11			S
16	L 6 6 5/8		8	10			S

2	33 CB 125	18 3½	F3			1
1	33 CB 125	18 3½	F2			1
12	- 4 4 3/8	2 0	am			S

1	FLOOR BEAM - F1					
1	33 CB 125	18 1½				2
2	L 4 4 3/8	2 0	a1			S
2	- 4 4 3/8	2 0	ad			S

4	PL	20 1	1 10	X1	not sh.		S
2	PL	24 1	2 11	X2	not sh.		S

1	PL	114 ½	20 0	ED1		20'-0	19
1	PL	3 1	20 0			20'-0	16
1	PL	20 1	20 0	ED2		20'-0	17

6	BRACKETS - B1	(Shop riv. to C1, C2, C3, C4, C5)				
6	PL	21 5/16	1 8½	a2		S
6	L 3½ 3½ 5/16		1 [illegible]	a1		S
6	L			a4		S
6	L 3½ 3½ 5/16		1 8½	a3		S
6	L			a5		S
12	L 3½ 3½ 5/16		1 7¼	ac		S

1	BRACKET - B2	(Shop riv. to C1, C2)				
1	PL	21 5/16	1 8½	a3		S
2	L 3½ 3½ 5/16		1 [illegible]	a5		S
2	L 3½ 3½ 5/16		1 7¼	ac		S
2	L 3½ 3½ 5/16		1 5¼	ag		S

1	- BRACKET - B3	(Shop riv. to C1, C2)				
1	PL	21 5/16	1 8½	aa		S
2	L 3½ 3½ 5/16		1 [illegible]	a5		S
2	L 3½ 3½ 5/16		1 6¾	ap		S
2	L 3½ 3½ 5/16		1 5¼	ah		S

NOTE TO SHOP:-

Brackets B1-B2-B3 to be shop riveted to cols C1 to C5 as called for on details of brackets

NOTES:
MATERIAL: O. H. Steel Card 855
SPECIFICATIONS: Maine State Highway Commission
INSPECTION: P. T. L.
ERECTION: A. B. Co.

RIVETS ⅞ unless noted
OPEN HOLES 15/16 unless noted

State of Maine
Maine Kennebec Bridge over Kennebec River between Richmond & Dresden

AMERICAN BRIDGE CO.
AMBRIDGE PLANT
Dwgs. made at Ambridge No. 3 in charge of Canady
Detailed by NV Date 11-6-30 Checked by [illegible] Date 11/13
Fld. conn. chk. by WBK Date 12-15-30
ORDER NO. G3820-S SHEET NO. 1

13-46

0 1 2 3 4 5 INCHES

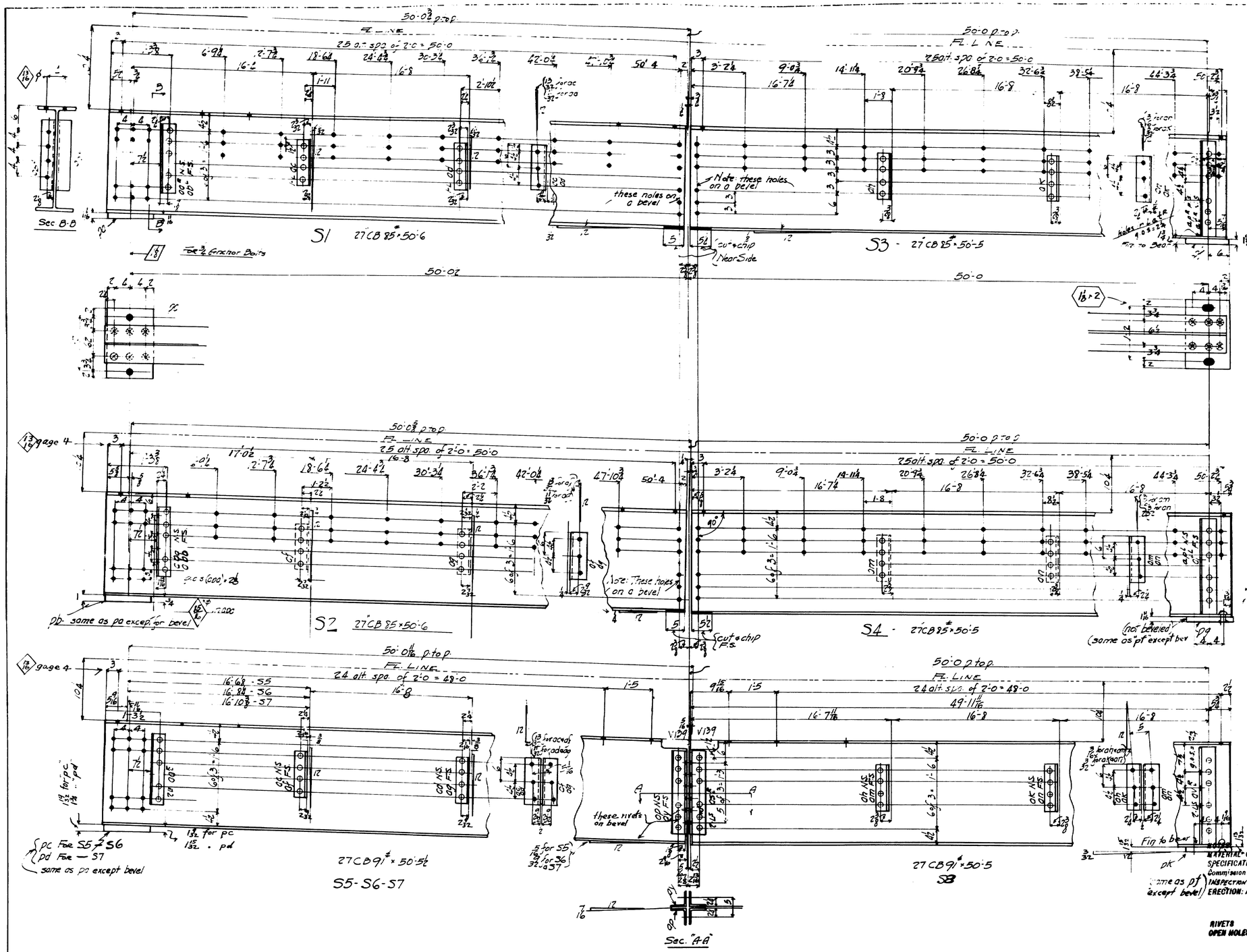

2-STRINGERS-S1-S2

2	27CB85#	50'6	PL		S1		9
2	L 3½ 3½ 7/16	6	PL		S1		S
2	PL 12×(10⅞-7/8)	6	PC		S2		S
2	L 3½ 3½ 7/16	6	PL		S1	4-40:1	15
2	L 3½ 3½ 7/16	6	PL		S1		15
2	L 3½ 3½ 7/16	6	PL		S2		S
2	PL 12×(10⅞-7/8)	6	PC		S2		S

2-STRINGERS-S3-S4

2	27CB85#	50'5	PL			50:5⅛	10
2	L 4 4 7/16	6	PL		Fin I End	40:1	15
2	L 4 4 7/16	6	PL		S3		15
2	L 4 4 7/16	6	PL		S4		15
2	PL 12×(11⅞-7/8)	6	PJ		S3		S
2	L 4 4 7/16	2	5½	6.5#	Fin. End		15
2	PL 12×1.11	6	PG		S4 - Hol. Str.		S

3-STRINGERS-S5, S6, S7

3	27CB91#	50'5½	PL	300#			3
6	L 3½ 3½ 7/16	6	PL	300#			S
3	L 4 4 7/16	0	CC				15
3	L 4 4 7/16	0	CC				15
3	L 4 4 7/16	0	CC				15
3	L 4 4 7/16	0	CC				15
2	PL 12×(12-3/32)	6	PC		S5 -S6		S
1	PL 12×(12-3/32)	6	PD		S7		S
3	L 4 4 7/16	9	CD		Closed		S
3	L 4 4 7/16	9	CC		Opened		S

3-STRINGERS-S8

3	27CB91#	50'5	PL				4
6	L 3½ 4 7/16	9	PL	303#			5
3	L 3½ 4 7/16	0	CM				15
3	L 3½ 4 7/16	0	CM				15
3	L 3½ 4 7/16	0	CK				15
3	L 3½ 4 7/16	0	CM				15
6	L 3½ 4 7/16	2	CH	304#	Fin I-End		15
3	PL 12×(11-29/32)×1		DK		S8		S

MATERIAL - O. H. Steel Card 855
SPECIFICATIONS: Maine State Highway Commission
INSPECTION P.T.L.
ERECTION: A. B. Co.

RIVETS ⅞ Diam.
OPEN HOLES 15/16 " except as noted

State of Maine
Maine Kennebec Bridge
over Kennebec River
between
Richmond & Dresden

AMERICAN BRIDGE CO.
AMBRIDGE PLANT
Dwgs. made at Ambridge No. 3 in charge of Canady
Detailed by Date Checked by T.P. Date 11/30
Fin. com. chk. by H.B.K. Date 12-15-30
ORDER NO. Q3820-S SHEET NO. 2

13-47

0 1 2 3 4 5 INCHES

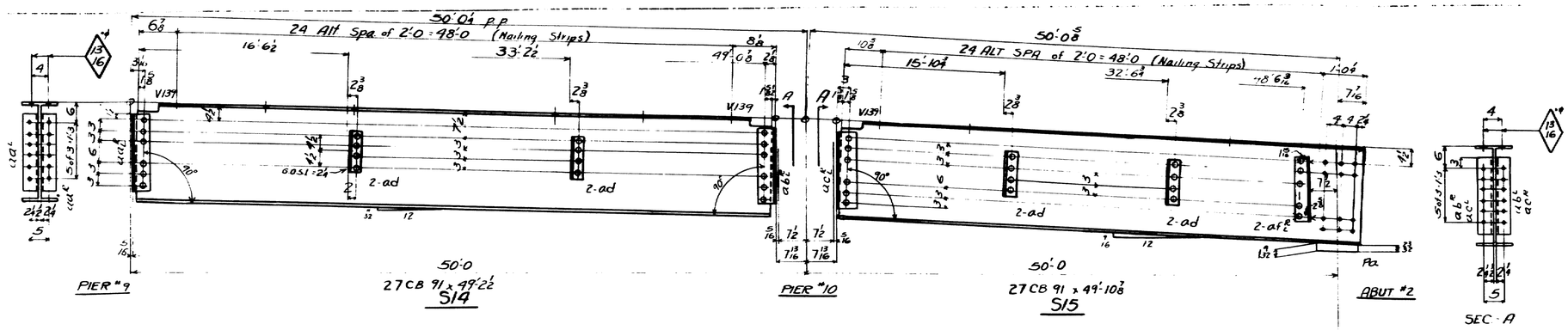

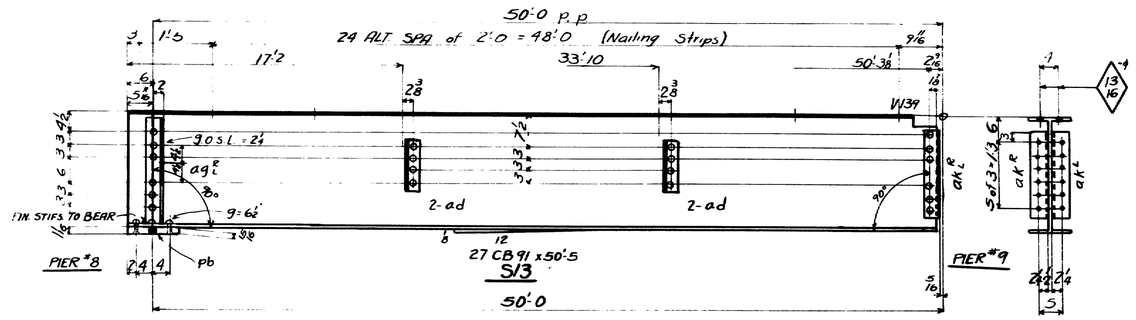

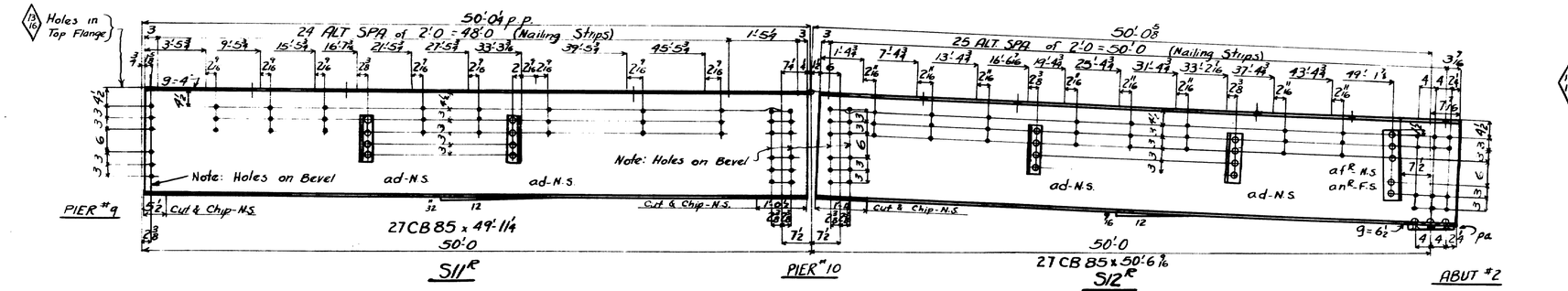

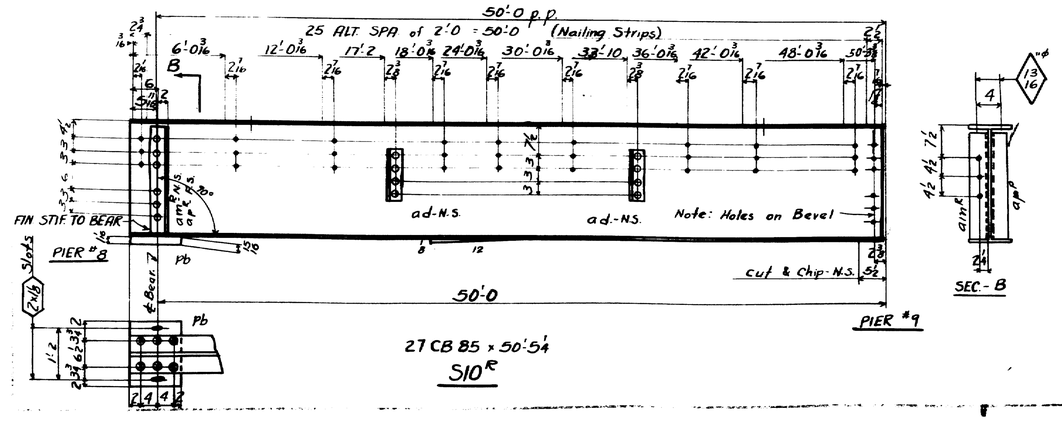

3 - STRINGERS - S13

3	27 CB 91		50 5					50'-5	4
3	PR	12 (11¾)	1 6	pb	Beveled				5
6	L 4 4	5/16	2 0¾	3 amR 3 afR	FIN 1 END			40'-1	15
6	L 4 4	3/8	1 9	3 amL 3 afL					5
48	12 L 4 4	5/16	1 0	ad					15

3 - STRINGERS - S14

3	27 CB 91		49 2½					49'-2½	7
6	L 4 4	3/8	1 9	3 amR 3 afR					5
6	L 4 4	3/8	1 9	3 amL 3 afL					5
12	L			ad					

3 - STRINGERS - S15

3	27 CB 91		49 10⅞					49'-11	6
6	L 4 4	3/8	1 9	3 amR 3 amL					5
12	L			ad					
8	6 L 4 4	5/16	1 6	3 afR 3 afL					15
3	PR	12 (11⅞)	1 6	pa	Beveled				5

ONE STRINGER - S10R
ONE STRINGER - S10L

2	27 CB 85		50 5¼					50'-5¼	10
1	PR			pb					5
2	L 4 4	5/16	2 0½	amR	FIN 1 END				15
4	L			ad					
2	L 4 4	5/16	2 0½	afR	FIN 1 END				15

ONE STRINGER - S11R
ONE STRINGER - S11L

2	27 CB 85		49 11¼					49'-11¼	11
4	L			ad					

ONE STRINGER - S12R
ONE STRINGER - S12L

2	27 CB 85		50 6 9/16					50'-6½	8
4	L			ad					
2	L			afR					
7	L 4 4	5/16	1 6	anR					15
2	R			pa					5

NOTES:
MATERIAL: O. H. Steel Card 855
SPECIFICATIONS: Maine State Highway Commission
INSPECTION: P. T. L.
ERECTION: A. B. Co.

RIVETS - 7/8"
OPEN HOLES - 1 1/16" unless noted

State of Maine
Maine Kennebec Bridge
over Kennebec River
between
Richmond & Dresden

AMERICAN BRIDGE CO.
AMBRIDGE PLANT
Dwgs. made at Ambridge No. 3 in charge of Canady
Detailed by TWB Date 11/16/30 Checked by T.A. Date 11/18/30
Fin. conn. chk. by HBK Date 12-15-30
ORDER NO. G3820 - S SHEET NO. 3

13-48

0 1 2 3 4 5 INCHES

ERECTOR'S LIST of FIELD RIVETS

No Pcs	Diam	⊏⊐	Grip	Thickness of material conn	Location
72	7/8	2 7/8	15/16	3/8 3/8 9/16	Stringers to F1 & F2
72	7/8	2 1/2	15/16	3/8 9/16	Stringers to F3
96	7/8	2 5/8	1 1/16	1/2 9/16	Outside stringers to cols
112	7/8	2 1/2	15/16	3/8 9/16	Floor beams to columns
64	7/8	2 5/8	1 1/8	5/16 13/16	Floor beams to col. brackets
280	7/8	2 1/4	1/16	5/16 3/8	Di to stringers
[illegible]	7/8	2 1/8	5/8	5/16 5/16	KP1 & KP2 to stringers
252	7/8	2 3/8	13/16	5/16 1/2	Other railing posts to stringers

SUMMARY of FIELD RIVETS

25	7/8	2 3/8
325	7/8	2 1/4
285	7/8	2 3/8
210	7/8	2 1/2
185	7/8	2 5/8
90	7/8	2 7/8

BOLTS

No pcs	Diam	Length under head	Head	Nut	Washer	Type of Bolt	Location
16	3/4	15		H	1/2 x 3/8 @ 13/16 hole	Swedge	Anchor Bolts-Columns
40	3/4	15		H	1/2 x 3/8 @ 13/16 hole	Swedge	Anchor Bolts-Stringers
12	7/8	2	H	H		Turned	S1 & S2 to Cols
24	3/4	15	H	2H		Ordinary	X4

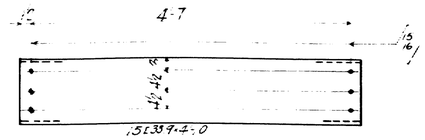

Diaphragm D1

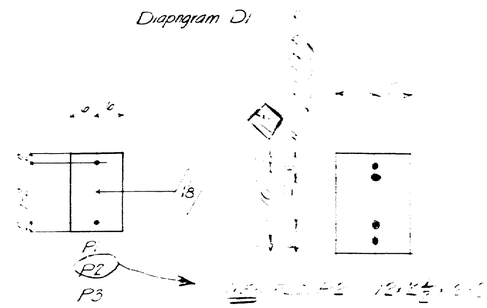

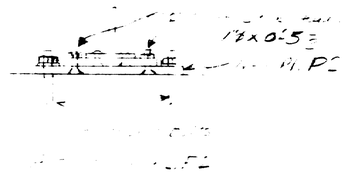

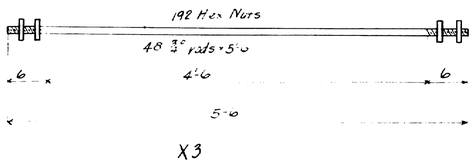

X3

AMERICAN BRIDGE COMPANY

Line	Material No. Pcs	Material Shape	Length Feet	Length Inch	Shipping Mark	Remarks	Cleaned	Item
1	48	15 @ 33.9	4	10	D1			S
3	8	12	1	6	P1	Hot Str.		S
4	8	12	2 1/2	6	P2	Hot Str.	12'-1 1/2	18
5	4	12	1 1/4	6	P3	Hot Str.		S
7	48	3/4" rods	5	6	X3			S
8	192	Hex Nuts						S

NOTES
MATERIAL: O. H. Steel Card 855
SPECIFICATIONS: Maine State Highway Commission
INSPECTION: P. T. L.
ERECTION: A. B. Co.

RIVETS
OPEN HOLES 15/16 unless noted

State of Maine
Maine Kennebec Bridge
over Kennebec River
between
Richmond & Dresden

AMERICAN BRIDGE CO.
AMBRIDGE PLANT
Dwgs. made at Ambridge No. 3 in charge of Canady
Detailed by AJV Date 11-18-30 Checked by Date
Fld. conn. chk. by HBK Date 12-15-30
ORDER NO. G3820-S SHEET NO. 4

13-49

0 1 2 3 4 5 INCHES

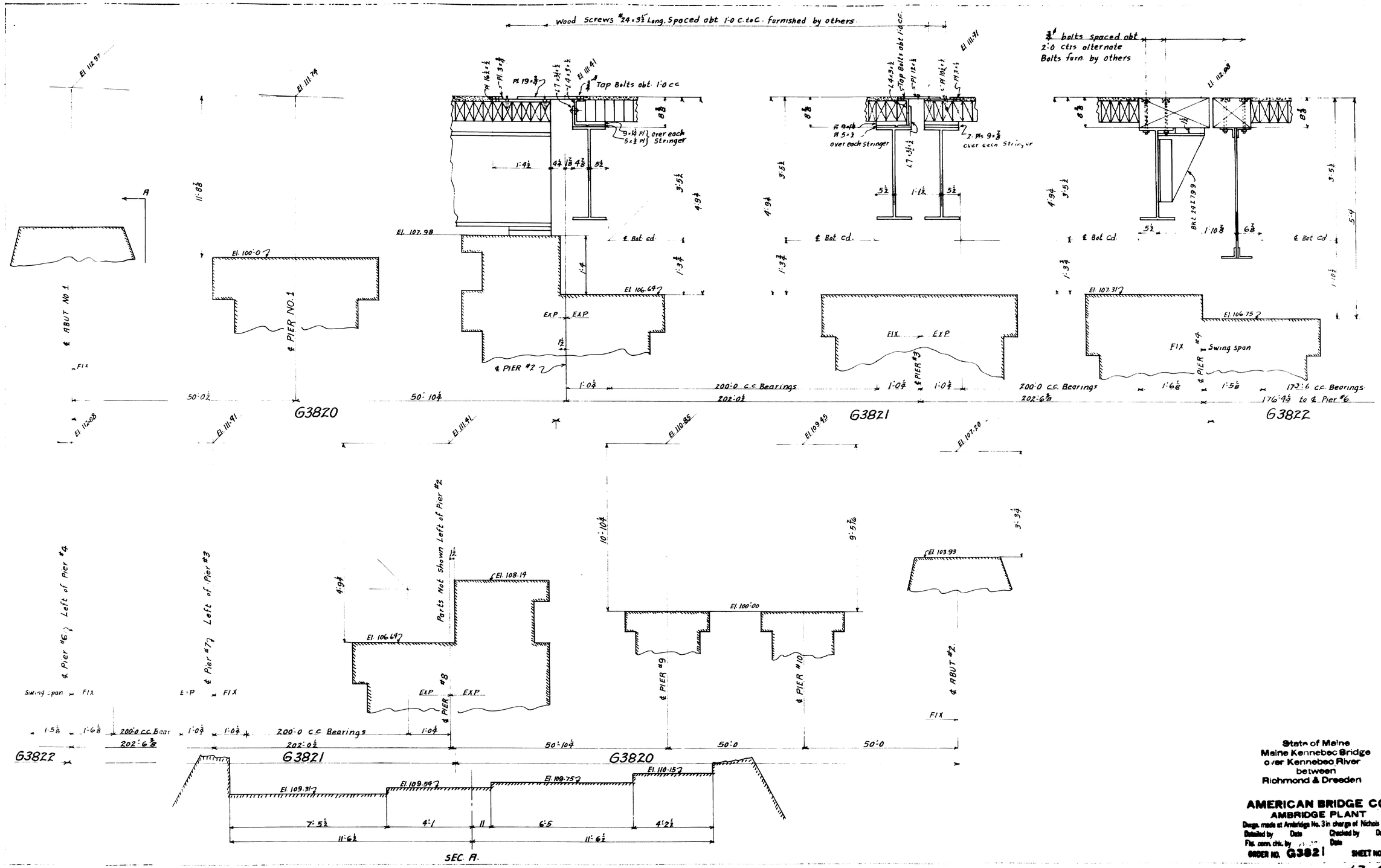

State of Maine
Maine Kennebec Bridge
over Kennebec River
between
Richmond & Dresden

AMERICAN BRIDGE CO.
AMBRIDGE PLANT
Dwgs. made at Ambridge No. 3 in charge of Nichols
Detailed by Date Checked by Date
Fld. conn. chk. by Date
ORDER NO. G3821 SHEET NO. E1

13-50

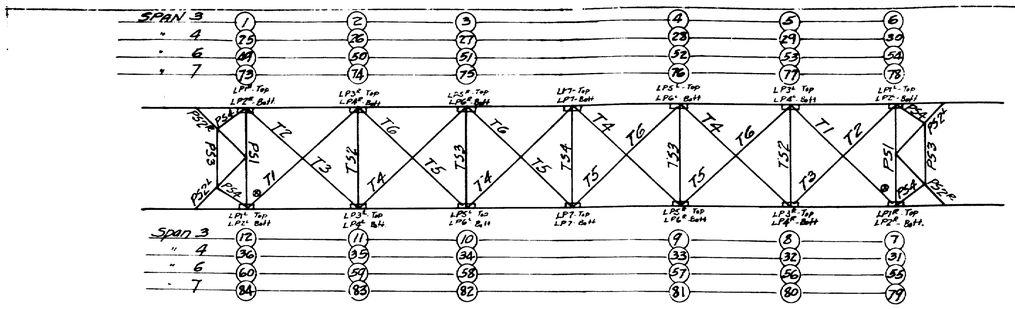

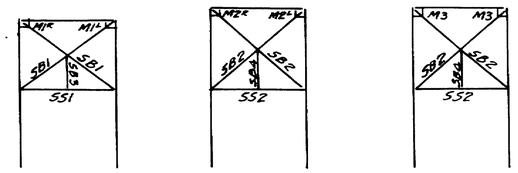

Sections taken looking from Ct'r toward end of spans.

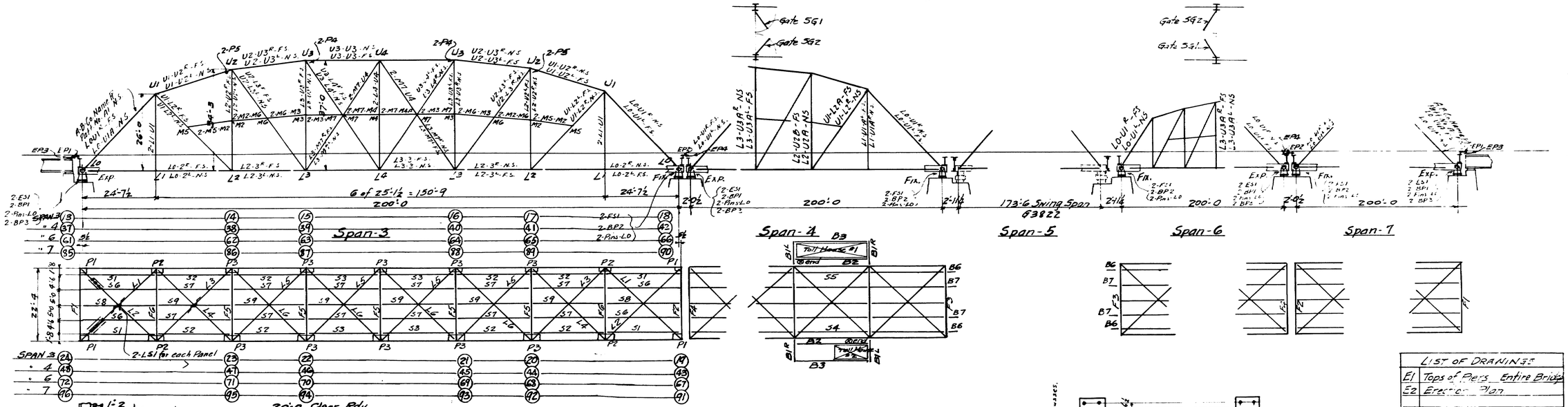

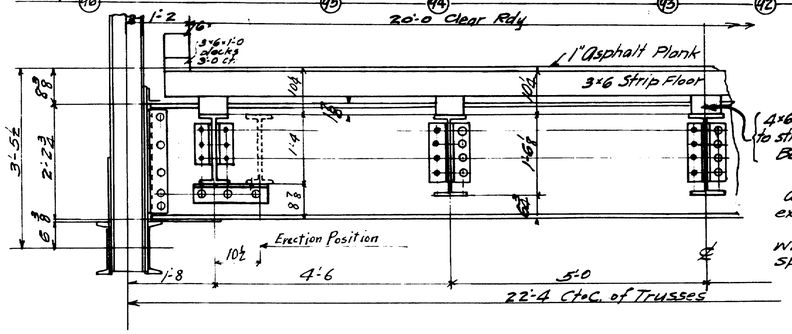

All material must be erected exactly as match marked. All chords are marked with their respective span numbers.

NOTES TO ERECTOR

Erect bott. lats. L1, L3 & L5 with O.S. legs turned up. ⊥L.

Place X end of stringers towards ends of spans.

Outside stringers to be bolted to shelf angles 10½" inside of final position to allow room for driving rivets in ends of floorbeams.

Marks for Spans 4, 6 & 7 are same as for Span 3 except where otherwise shown.

Rivet Lat. Pl. Pl to Floor Beam before swinging into place.

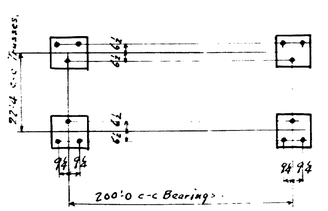

PLAN—SHOWING POSITION OF SHOES.

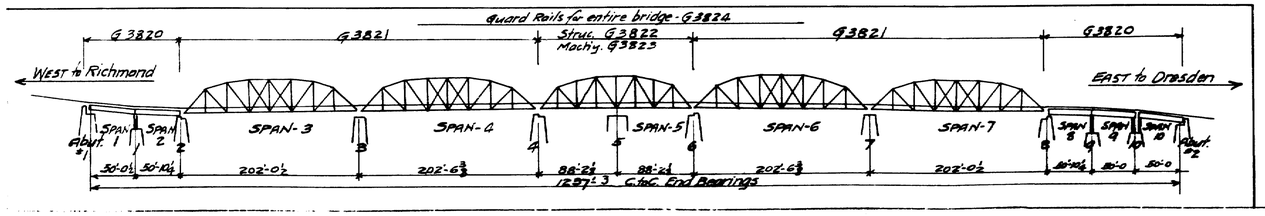

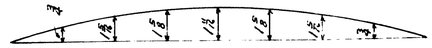

CAMBER DIAGRAM.

Rev. 1-15-31

Rev. for match marking numbers ECN. 4/28-31

LIST OF DRAWINGS	
E1	Tops of Piers Entire Bridge
E2	Erection Plan
1	End Post & Top Chord.
2	Top Chords.
3	Bott. Chords
4	" "
5	Web Members.
6	Portal & Sway Bracing
7	Flbms & Stringers
8	"
9	Top Laterals
10	Shoes & Pins
11	Top Lat. Plates.
12	Bott. Lats. & Web Ties
13	Toll House Bms. & Brackets
14	[illegible]

State of Maine
Maine Kennebec Bridge
over Kennebec River
between
Richmond & Dresden
4-SPANS 200'-0 C to C.

AMERICAN BRIDGE CO.
AMBRIDGE PLANT
Dwgs. made at Ambridge No. 3 in charge of Nichols
Detailed by ECN Date 11-17-30 Checked by Date
Fin. elev. chk. by [illegible] Date
ORDER NO. G3821-S SHEET NO. E2

13-51

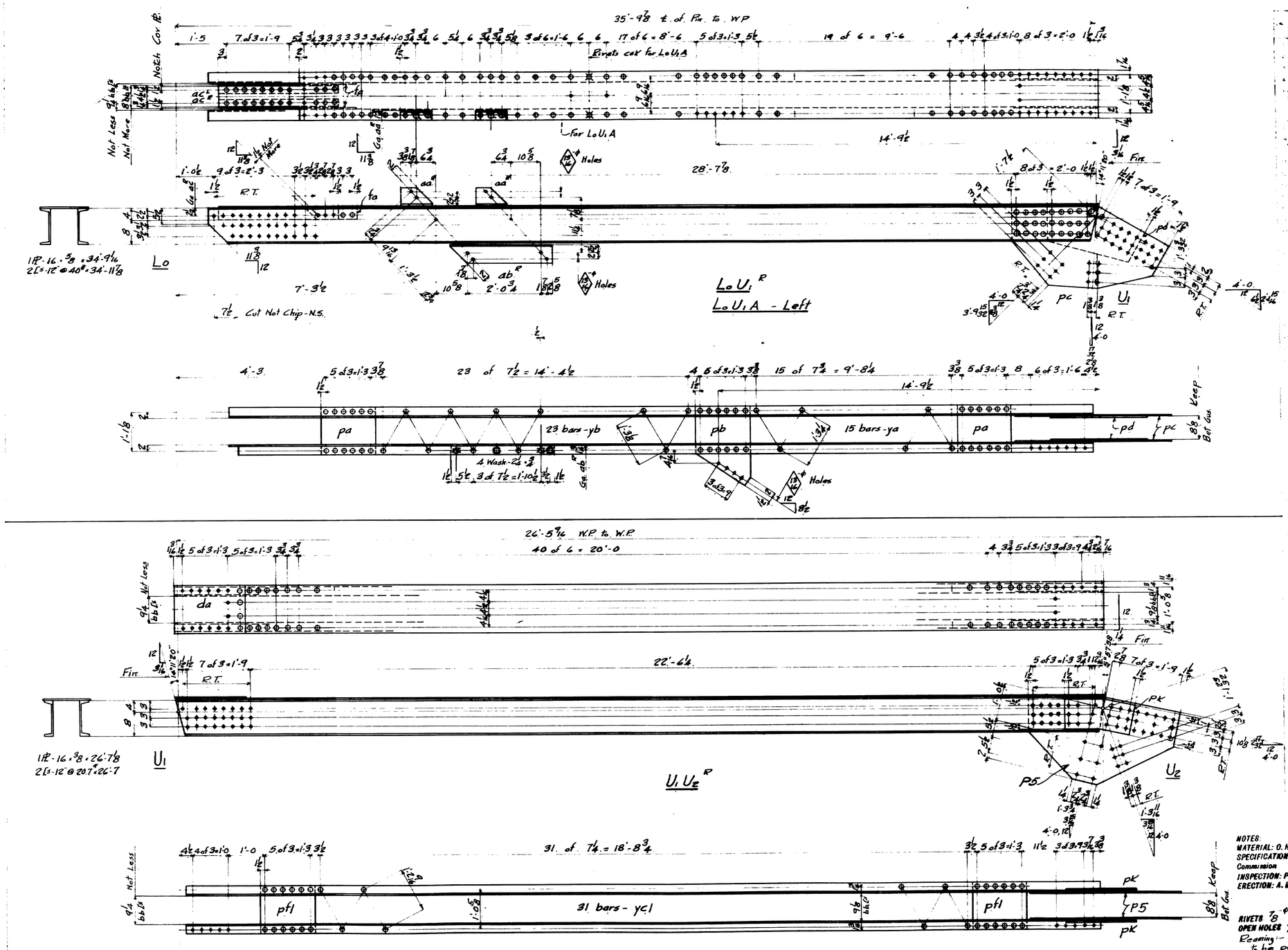

AMERICAN BRIDGE COMPANY

16 End Posts - 8 LoU1R, 6 LoU1L, 2 LoU1A

32 Ls	12 @ 40#	34 11 7/8		Fin. 1 End	35'-0 1/2	20
16 Pls	16 5/8	34 9 1/16		Fin. 1 End	34'-9 3/4	77
16 Ls	6 3 3/8	0 10 1/2	aa R	Cut 6 x 3 1/2		S
16 Ls			aa L	do.		
8 Ls	6 3 3/8	2 10 1/2	ab R	do.		S
8 Ls			ab L	do.		
16 Ls	4 3 5/16	3 4 1/2	ac R			S
16 Ls			ac L			
32 Fills	4 1/2	1 5 11/16	fa			S
32 Pls	18 5/16	1 4	pa			S
16 Pls	18 3/8	2 2 1/2	pb			S
32 Pls	26 1/2	4 4 1/8	pc		4-34-11	61
32 Pls	15 3/8	2 9 1/2	pd			S
240 Bars	2 1/2 3/8	1 3 1/4	ya	c. to c.		S
368 Bars	2 1/2 3/8	1 3 1/8	yb	c. to c.		S
64 Washers	2 1/4 x 3/4 x 15/16	Hole				S

16 Top Chords - 8-U1U2R, 8-U1U2L

16 Pls	16 3/8	26 7 1/8		Fin. 2 Ends	26'-8	79
32 Ls	12 @ 20.7#	26 7		Fin. 2 Ends	26'-7 3/4	24
16 Fills	16 1/4	1 10 1/8	da	Fin. 1 End		S
128 32 Pls	18 5/16	1 3 1/4	pfl			S
32 Pls	11 3/8	1 11 1/4	pk			S
440 496 Bars	2 1/2 3/8	1 2 9/16	ycl	c. to c.		S
64 T Bolts - 7/8 φ						S

32 Pls 29 1/2 4 2 1/4 32-P5 4-33-7 56

NOTES:
MATERIAL: O. H. Steel Card 855
SPECIFICATIONS: Maine State Highway Commission
INSPECTION: P. T. L.
ERECTION: A. B. Co.

RIVETS 7/8 φ
OPEN HOLES 15/16 φ Unless noted
Reaming:- Holes marked R.T. to be punched 11/16 φ + reamed to 15/16 φ to a metal Templet.

State of Maine
Maine Kennebec Bridge
over Kennebec River
between
Richmond & Dresden
4-SPANS 200'-0 c to c

AMERICAN BRIDGE CO.
AMBRIDGE PLANT
Dwgs. made at Ambridge No. 3 in charge of Nichols
Detailed by AC Date 11/4/30 Checked by [illegible] Date [illegible]
Fin. corr. chk. by [illegible] Date
ORDER NO. G3821-5 SHEET NO. 1

13-52

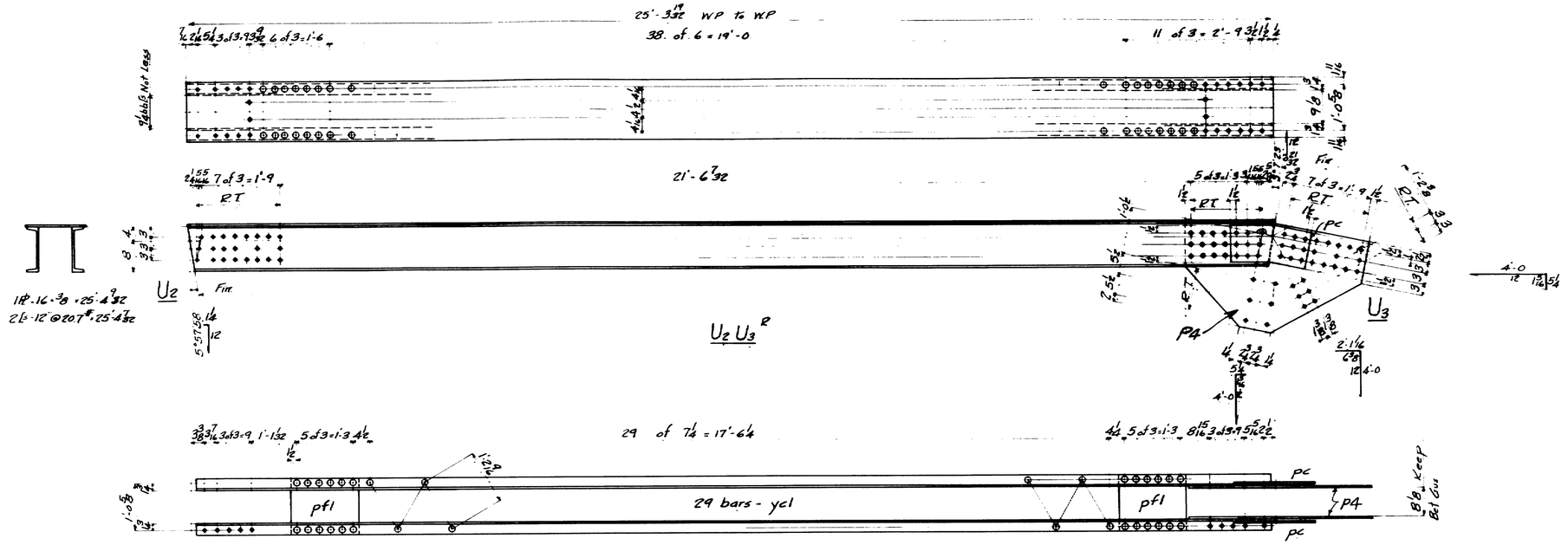

16 TOP CHORDS - 8 U2 U3, 8 U2 U3

16 PLs	16 - 3/8 × 25 4 3/32	Fin 2 Ends	25'-5 80
32 Ls	12 @ 20.7# 25 4 3/32	Fin 2 Ends	25'-5 25
32 PLs	18 - 5/16 × 1 3/4 pfl		
464 Bars	2 1/2 - 3/8 × 1 2 5/16 ycl	C. to C.	
32 PLs	10 - 3/8 × 1 9 1/2 pc		5
64 T Bolts	7/8"ϕ		3

8 TOP CHORDS - U3U3

8 PLs	16 - 3/8 × 50 4 1/8	Fin 2 Ends	50'-5 78
16 Ls	12 @ 20.7# 50 4 1/16	Fin 2 Ends	50'-5 23
32 PLs	pfl		
480 Bars	ycl		
16 PLs	29 1/2 × 2 4 1/2 pd		2'-7 1/2 57
16 Wash.	2 1/4 × 3/8		5

32 PLs 29 1/2 × 2 4 0 1/2 — 32-P4 4'-3 2/32"-5 55

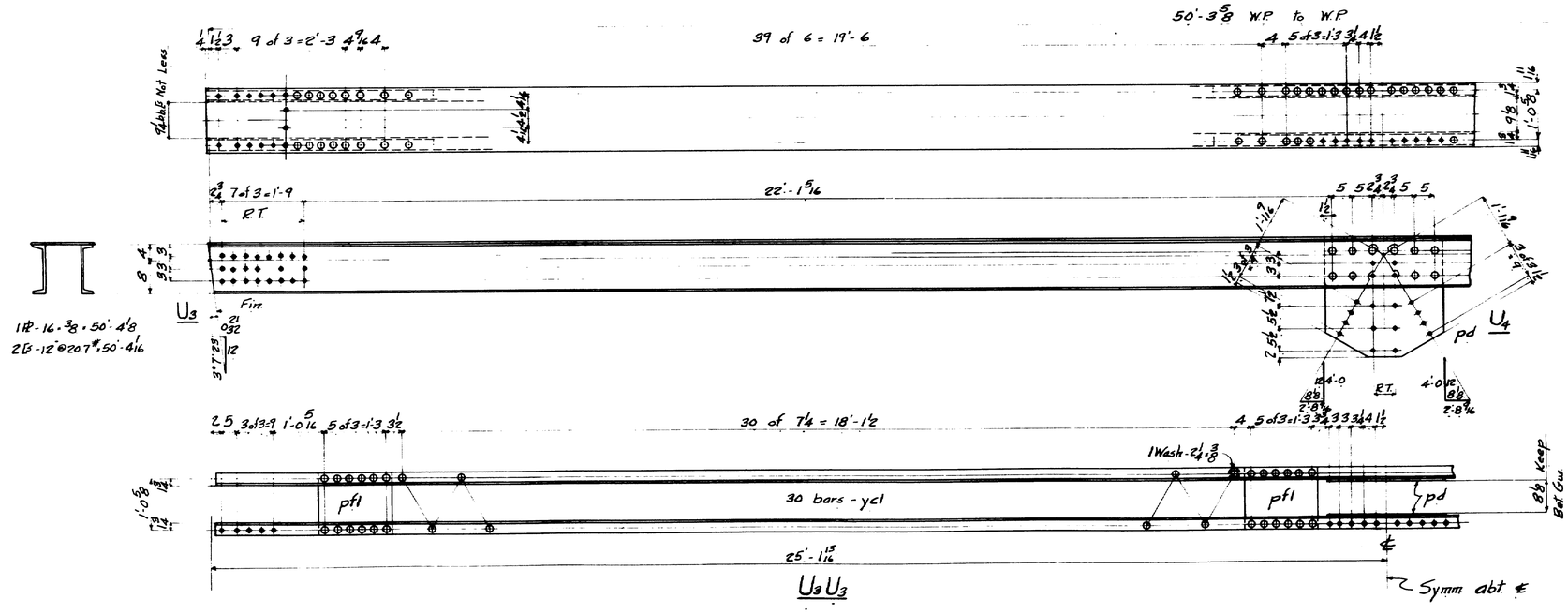

NOTES:
MATERIAL: O. H. Steel Card 855
SPECIFICATIONS: Maine State Highway Commission
INSPECTION: P. T. L
ERECTION: A. B. Co.

RIVETS 7/8"ϕ
OPEN HOLES 15/16"ϕ

Reaming:- Holes marked RT to be punched 11/16"ϕ + reamed to 15/16"ϕ to a metal templet.

State of Maine
Maine Kennebec Bridge
over Kennebec River
between
Richmond & Dresden
4-SPANS 200 ? C to C

AMERICAN BRIDGE CO.
AMBRIDGE PLANT
Dwgs. made at Ambridge No. 3 in charge of Nichols
Detailed by A C Date 11-18-30 Checked by Date
Fin. comp. chk. by Date
ORDER NO. Q382/6 SHEET NO. 2

13-53

AMERICAN BRIDGE COMPANY

16- Bottom Chords, 8-LO-2R, 8-LQ-2L

32	12	L	30.	477¼			47'-7¼	22
32	PL		38.	½	3.	62	4-28'-5	54
16	PL		16.	⅜	8	2 9½	ha	Bent		5
32	PL		18.	5/16	1	3¼	pf1			5
400	PL		12.	5/16	1	3¼	pc			5
64	PL		9.	⅜	2	1	pg			5
32	PL		16.	5/16	1	10	pd			5
32	Full		11.	½	1	2½	db		2-19'-5	83
32	Fill		9.	⅜	1	3	da			5
16	L	3½	32.	5/16	1	11¾	aa R			5
16	L	3½	32.	5/16	1	11¾	aa L			
16	Fill		3.	⅜		7½	fa			5
32	L	4	2½	⅜	2	4⅝	ac R	cut(4x3)		5
32	L	4	2½	⅜	2	4⅝	ac L	cut(4x3)		
32	PL		8½	⅜	2	4⅝	pm		4-19'-3	59
32	PL		8½	⅜	1	11½	ph		2-31'-5	52
16	PL		5.	½	2	2⅛	pf	Fin 1-End		5
32	L	4	4.	⅜	1	9	ab			5

192	PB.	⅞	1¾	Hex H&N	5
128	TB	⅞			5

16	PL	20.	⅜	2	9	P1	2-22'-1 69
16	PL	20.	⅜	4	3	P2	2-34'-1 68

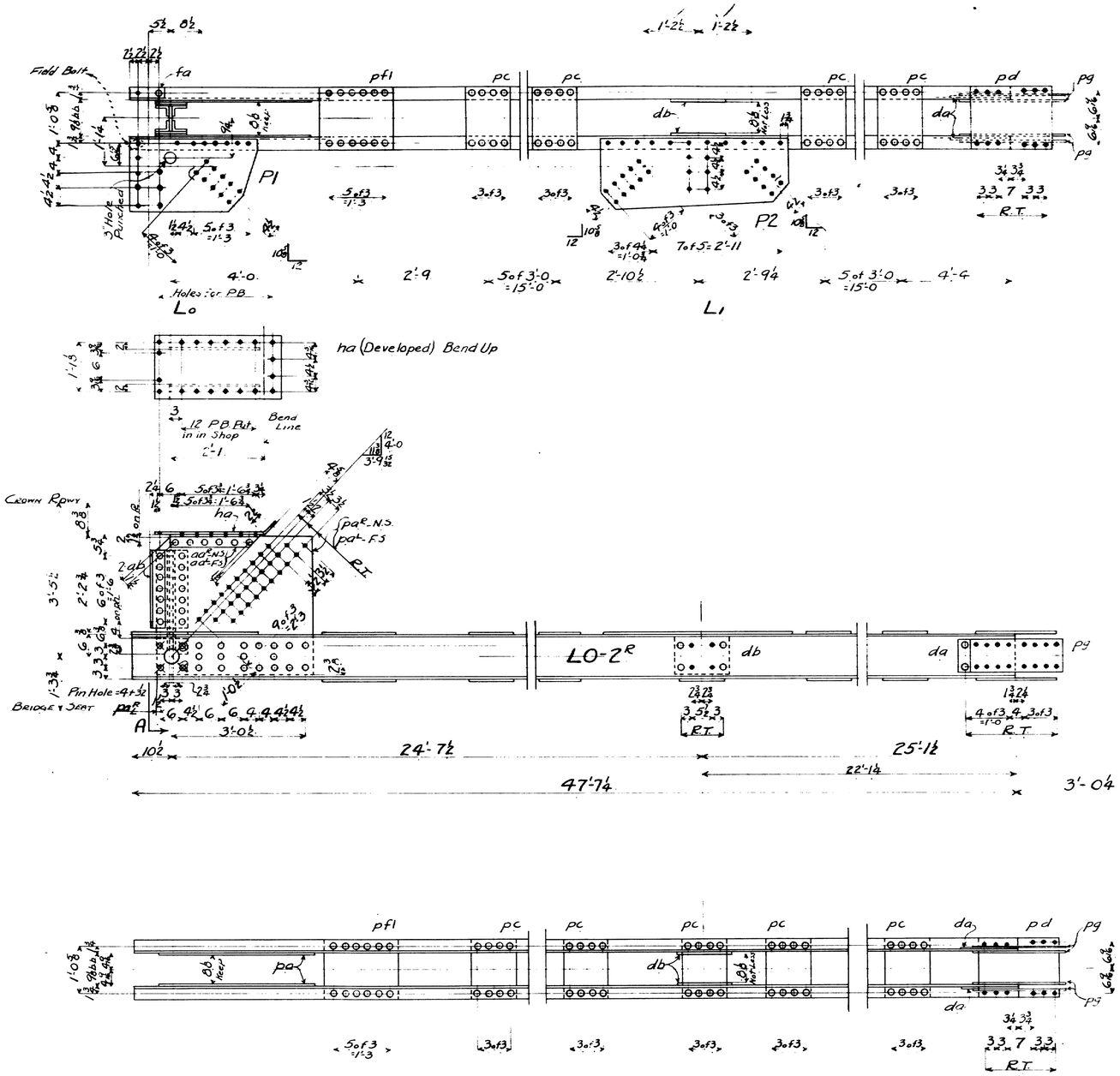

NOTES:
MATERIAL: O. H. Steel Card 855
SPECIFICATIONS: Maine State Highway Commission
INSPECTION: P. T. L.
ERECTION: A. B. Co.

RIVETS ⅞
OPEN HOLES 15/16
Reaming:- Holes marked R.T. to be punched 11/16 and reamed to 15/16 to a metal templet

Note to Erector
Rivet 1 of pls. "P" to End Flbm. before placing in position.

State of Maine
Maine Kennebec Bridge
over Kennebec River
between
Richmond & Dresden
4-SPANS 200'-0 C to C

AMERICAN BRIDGE CO.
AMBRIDGE PLANT
Dwgs. made at Ambridge No. 3 in charge of Nichols
Detailed by HCM Date 11-11-30 Checked by Date
Fin. comm. chkr. by Date
ORDER NO. G3821-5 SHEET NO. 3

13-54

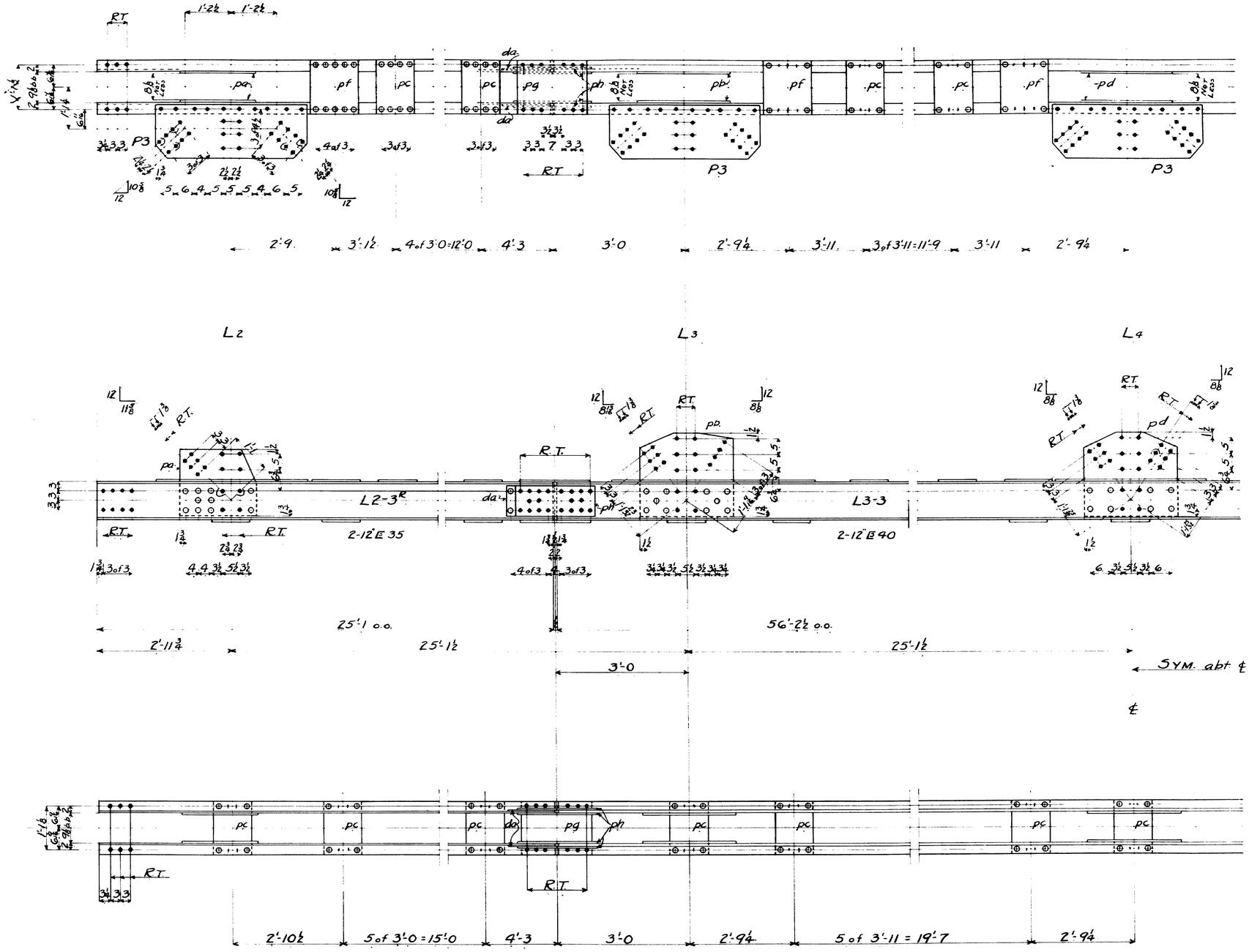

16 - BOTTOM CHORDS = 8-L2-3^{R}, 8-L2-3^{L}

32	12	L	35		25.1		25'-1	21
48	16	R	15	5/16	1	3/8 pf	{46+2 -30'-7	21
376	192	R	12	5/16	1	3/8 pc		3
32	R		21	½	2	0 pa	2-32'-1	64
32	R		16	5/16	1	10 py		3
64	R		9	½	2	1 ph		3
32	fill		9	3/8	1	3 da		3

128 TB. ⅜ #

8 - BOTTOM CHORDS - L3-3

16	12	L	40	56 2½		56'-2½	19
32	R				pf		
184	R				pc		
32	R			26 2	2 4½ pd	4-19'-1	62
16	R			26 2	2 3½ pd	2-18'-5	63

40 LAT. P3 - P3

40	R	3	17½	⅜	4 0½	5-32'-5	71

NOTES:
MATERIAL: O. H. Steel Card 855
SPECIFICATIONS: Maine State Highway Commission
INSPECTION: P. T. L.
ERECTION: A. B. Co.

RIVETS ⅞
OPEN HOLES 1⅛
Reaming:- Holes marked RT to be punched 1" and reamed to 1⅛ to a metal templet.

State of Maine
Maine Kennebec Bridge
over Kennebec River
between
Richmond & Dresden
4-SPANS 200'-0 C to C.

AMERICAN BRIDGE CO.
AMBRIDGE PLANT
Dwgs. made at Ambridge No. 3 in charge of Nichols
Detailed by H C M Date 11-17-30 Checked by Date
Fld. conn. chts. by Date
ORDER NO. G3821-5 SHEET NO. 4

13-55

0 1 2 3 4 5 INCHES

AMERICAN BRIDGE COMPANY

	14	8 CB31	24 11		14-L1U1	15
212	56	Ls 4 3½ 5/16	10½	aa		13-40-1 31
	2	8 CB31	24 11		1 1-U1-A R/L	15
6-R 6-L	8	Ls 4 3½ 5/16	9¼	4-af R/L		40-1 31
	4	Ls 4 4 3/8	2 2¾	2-ag R/L		5
	14	8 CB31	34 7¾		7-L2-U2 R; 7-L2-U2 L	14
16	14	Ps 8 ½	2 1	pa		5
	56	Ls 4 3½ 5/16	10½	aa		
40-R 40-L	28	Ls 4 3 3/8	1 6	14-ak R/L		5
	1	8 CB31	34 7¾		L2-U2-A	14
2-R 2-L	2	Ls 4 3½ 3/8	2 2½	ah R/L		5
	1	P 8 ½	2 1	pa		
	4	Ls 4 3½ 5/16	10½	aa		
2	1	Fill 8 9/16	1 8½	fa		5
	2	Ls 4 3 3/8	1 6	ak R/L		
	16	8 CB31	37 4½		6-L3-U3 R; 6-L3-U3 L; 2-L3-U3A R; 2-L3-U3A L	13
24	16	Ps 8 ½	1 7½	pb		5
	64	Ls 4 3½ 5/16	10½	aa		
	32	Ls 4 3 3/8	1 6	16-ak R/L		
	8	8 CB31	37 4½		8-L4-U4	13
	8	Ps 8 ½	1 7½	pb		
	32	Ls 4 3½ 5/16	10½	aa		
	16	Ls 4 3 3/8	1 6	8-ak R/L		
	15	8 I 17.5	34 1¼		8-U1-L2 R; 7-U1-L2 L	18
	60	Ls 4 3½ 5/16	11	32-ab R; 28-ab L		40-1 31
	1	8 I 17.5	34 1¼		U1-L2-A	18
	16	8 I 17.5	40 5⅞		8-U2-L3 R; 8-U2-L3 L	17
	64	Ls 4 3½ 5/16	8¾	32-ac R/L		40-1 31
	16	8 I 17.5	42 8		8-U3-L4 R; 8-U3-L4 L	16
	32	Ps 28 3/8	3 0	pc		6-24-1 59
	64	Ls 4 3½ 5/16	8⅜	32-ad R/L		40-1 31
	8	12 CB40	20 9		TS2 (Flared)	8
	16	Fills 8 5/16	1 2	ha		5
	8	12 CB40	20 9		TS3 (Flared)	8
	16	Fills 8 5/16	1 2	hb		5
	4	12 CB40	20 9		TS4	8
	8	Fills 3 5/16	1 2	pd		5
	80	P.B. ¾ φ x 2"				
	1	8 CB31	34 7¾		L2-U2-B	14
	1	P 8 ½	2 1	pa		
	1	Fill 8 9/16	1 8½	fa		
	4	Ls 4 3½ 5/16	9¼	2-af R; 2-af L		
	2	Ls 4 3½ 3/8	2 2½	ah R/L		
	2	Ls 4 3 3/8	1 6	ak R/L		

Reaming: Holes marked "R.T" to be punched 11/16" φ and reamed to 15/16" φ to a metal templet. Rev. 1-15-31

NOTES:
MATERIAL: O. H. Steel Card 855
SPECIFICATIONS: Maine State Highway Commission
INSPECTION: P. T. L.
ERECTION: A. B. Co.

RIVETS 7/8
OPEN HOLES 15/16 (Unless Noted)

State of Maine
Maine Kennebec Bridge
over Kennebec River
between
Richmond & Dresden

AMERICAN BRIDGE CO.
AMBRIDGE PLANT
Dwgs. made at Ambridge No. 3 in charge of Nichols
Detailed by JLM Date 11/18/30 Checked by [illegible] Date
Fix. conn. chk. by [illegible] Date
ORDER NO. G3821-S SHEET NO. 5

13-56

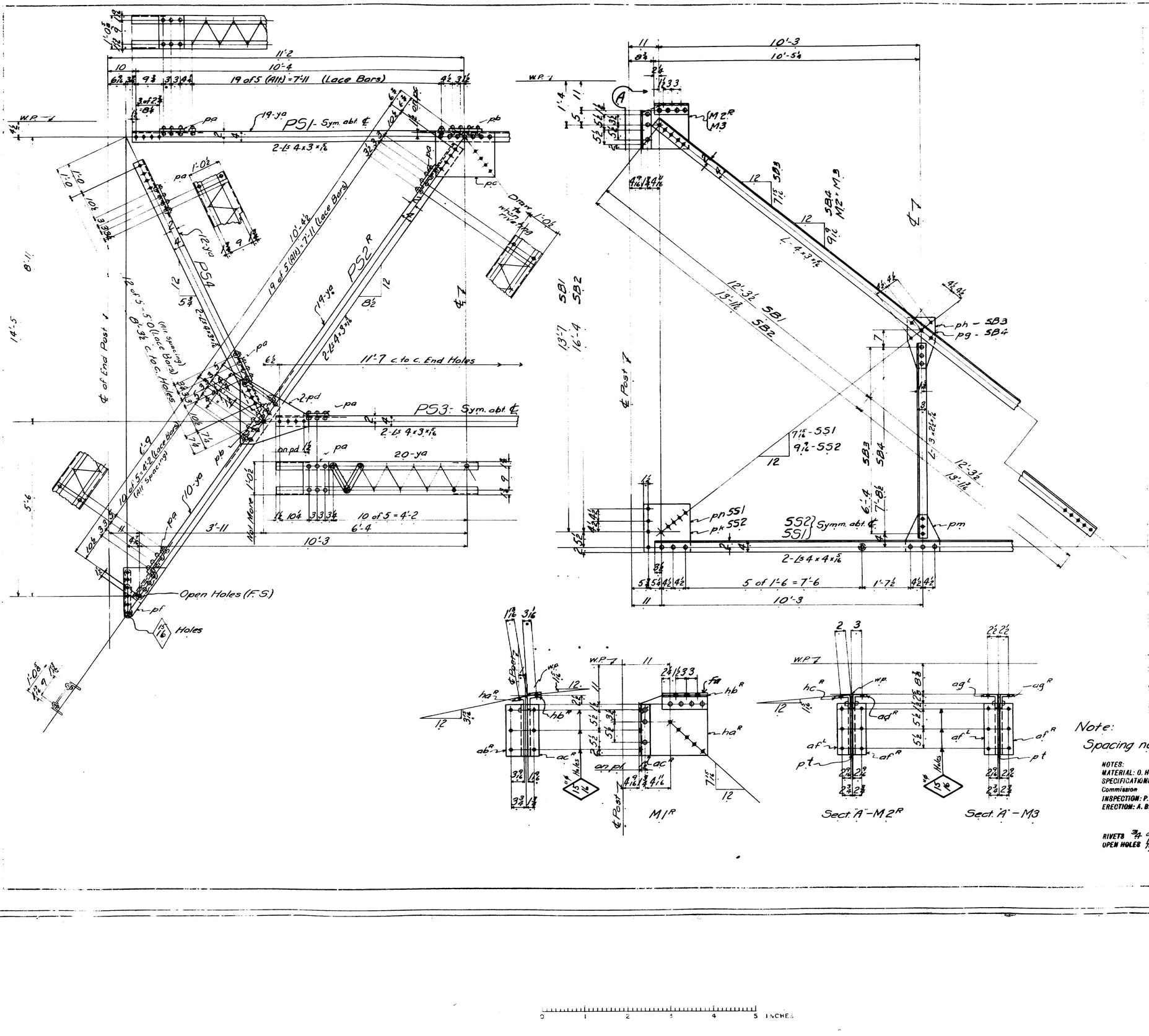

8 Portal Struts							PS1	
16	Ls	4	3	5/16	20	11		16-20-11 40
1120	304 Bars	2'4	3/8			0 7/8 (cc)	ya	S
96	16 Pls	9	1/4	1	0		pa	S
24	8 Pls	12	1/4	1	0		pb	S
	16 Pls	16	5/8	1	9		pc	S
16 Portal Struts							8-PS2R 8-PS2L	
32	Ls	4	3	5/16	11	42		42-17-42 41
464	Bars	2±	3/8			10 3/4 (cc)	ya	
32	Pls	9	5/16	1	0		pa	
16	Pls	12	1/4	1	0		pb	
32	Pls	24	3/8	2	2		pd	S
16	Pls	18	3/8	1	3½		pf	S
16	Washers - 2½" ⌀ x 5/16							S
8 Portal Struts							PS3	
16	Ls	4	3	5/16				8-23-8 38
160	Bars	2±	3/8			10 3/4 (cc)	ya	
16	Pls	9	1/4	1	0		pa	
8	Washers - 2½" ⌀ x 5/16							S
16 Portal Struts							PS4	
32	Ls	4	3	5/16	8	6		8-34-3 35
192	Bars	2±	3/8			10 3/4 (cc)	ya	
32	Pls	9	5/16	1	0		pa	
16	Washers - 2½" ⌀ x 5/16							S
								8-55-1
								12-55-2
20 Struts								40-21-1 29
40	Ls	4	4	5/16	21	1		
200	Washers	2¼ dia x 5/16 thick x 13/16 ⌀ hole						S
20	Pls	12	5/16	1	1½		pm	S
16	Pls	18	5/16	1	5		pn for 55-1	S
24	Pls	18	5/16	1	5		pk for 55-2	S
16 Diagonals							5B1	
16	Ls	4	3	5/16	24	10		16-24-10 37
24 Diagonals							5B2	
24	Ls	4	3	5/16	26	5⅜		24-26-3½ 36
8 Diagonals							5B3	
8	Ls	3	2½	5/16	6	7		S
8	Pls			1/4	1	6½	ph	S
12 Diagonals							5B4	
12	Ls	3	2½	5/16	7	11½		S
12	Pls		10	1/4	1	6½	pg	S
16 Brackets							8-M1R 8-M1L (at U2)	
16	Pls	17½	3/8	1	8¼		8-ha R 8-ha L Bent	1-27-1 72
16	Ls	5	4	3/8	1	12	8-hb R (cut 6x4) Bent	S
16	Ls	5	3½	5/16	1	2½	8-ac R 8-ac L	S
16	Ls	3	3	5/16	1	2½	8-ae R 8-ae L	S
16	Fills	4	3/8	1	1½		fa	S
16 Brackets							8-M2R 8-M2L (at U3)	
24	16 Pls	17½	5/16	1	4½		pt	1-33-1 74
16	Ls	4	3½	3/8	1	1	8-hc L 8-hc R Bent	S
16	Ls	4	4	3/8	1	1	8-ad R	S
24-R 24-L	32 Ls	4	3	5/16	1	2½	16-af R 16-af L	S
8 Brackets							M3 (at U4)	
8	Pls	17½	5/16	1	4½		pt 8-ag R 8-ag L	S
16	Ls	4	4	3/8	1	1	8-ad L 8-af R 8-af L	
16	Ls	4	3	5/16	1	2½		

NOTES:
MATERIAL: O. H. Steel Card 855
SPECIFICATIONS: Maine State Highway Commission
INSPECTION: P. T. L.
ERECTION: A. B. Co.

RIVETS ¾ dia.
OPEN HOLES 13/16 dia unless noted

State of Maine
Maine Kennebec Bridge
over Kennebec River
between
Richmond & Dresden
4-SPANS 200'-0 Ctc.

AMERICAN BRIDGE CO.
AMBRIDGE PLANT
Dwgs. made at Ambridge No. 3 in charge of Nichols
Detailed by P.O.K Date 11-11-30 Checked by R.L.S Date 11/26/30
Fin. comm. chk. by J.V.S Date
ORDER NO. G3821-5 SHEET NO. 6

13-57

25

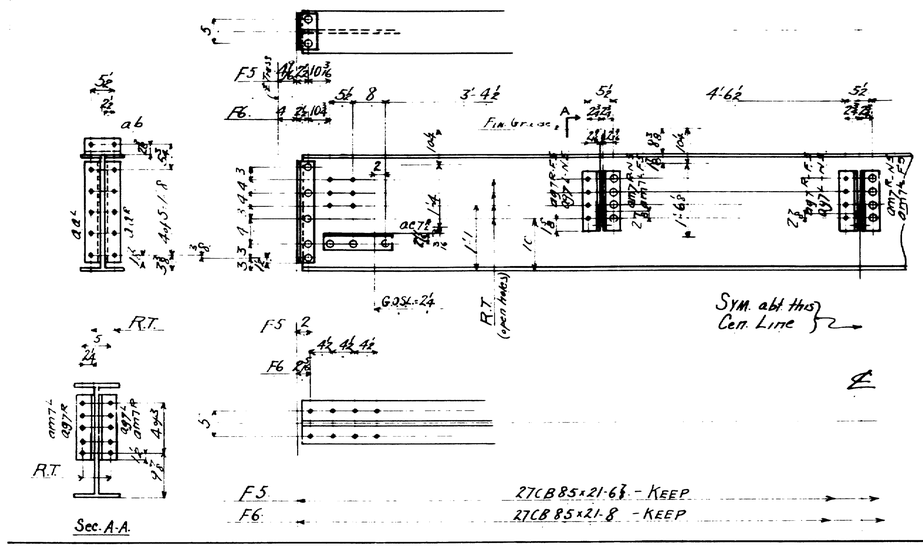

Sec. A-A.

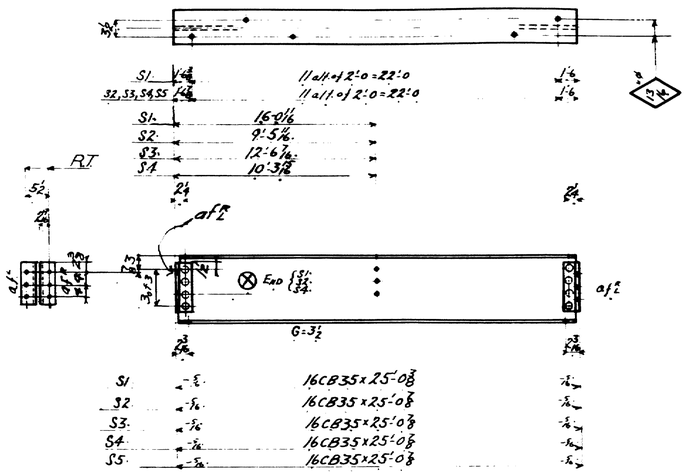

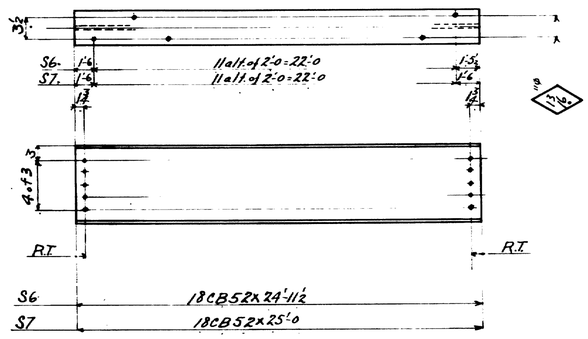

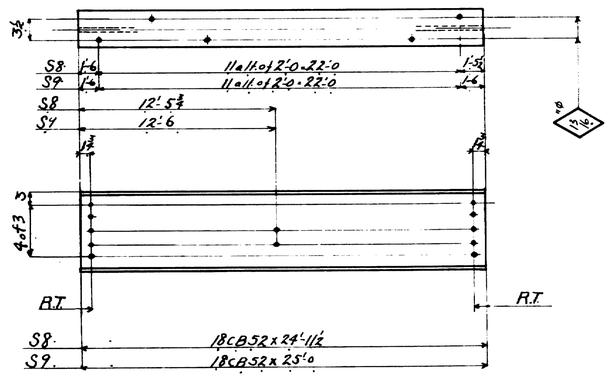

AMERICAN BRIDGE COMPANY

28 FLOOR BEAMS 20-F5, 8-F6

8	27 CB 85	21 8						21'-7"	3
20	27 CB 85	21 6⅞						21'-6"	4
56	Ls	4 4 7/16	2	0	aa^R				5
56	Ls				aa^L				
56	Ls	4 4 ⅞		8½	ab.				5
56	Ls	4 3½ 7/16	1	4½	ac7^R			40'-1	31
56	Ls				ac7^L				
168	Ls	4 3½ 7/16	1	3	84-27^R 84-27^L				5
168	L.B.	⅞							
168	L	4 3½ 7/16	1	3	84-am^R 84-am^L				5

8 BRACKETS 4-B6, 4-B7

4	24"Lx	79.9	9¾		Cov. Pl.	B6		5
4	24"Lx	79.9	5⅞		Cov. Pl.	B7		5
4	Ls	4 3½ ⅞	1	6	af^R	B6		5
4	Ls				af^L	"		
8	Ls	4 3½ ⅞	1	6	4-af^R 4-af^L	B7		5
4	Fils	5 1/16	7		da	B6		5
4	Fils	14 1½	6		fa	B7		5

64 STRINGERS { 16-S1 30-S2 ; 16-S3 1-S4 ; 1-S5

16	16CB35	25 0⅜	S1	24-11½	12		
48	16CB35	25 0⅞	30-S2 16-S3 1-S4 1-S5	25-0	11		
128	Ls	4 3½ 7/16	1	0	af^R		5
128	Ls				af^L		5

64 STRINGERS 16-S6 48-S7

16	18CB52	24 11½	S6	24-11½	10
48	18CB52	25 0	S7	25-0	9

32 STRINGERS 8-S8 24-S9

8	18CB52	24 11½	S8	24-11½	10
24	18CB52	25 0	S9	25-0	9

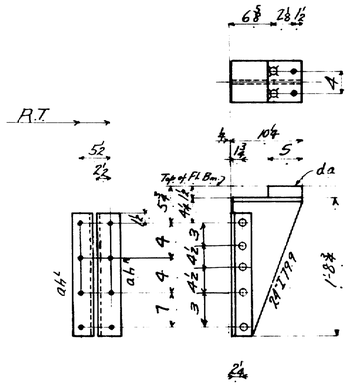

B6

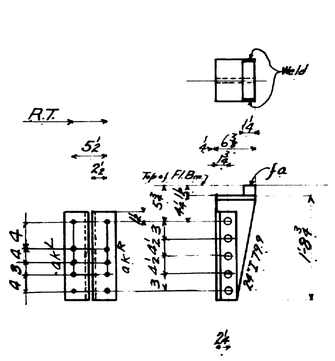

B7

NOTE:-
Erection material marked "8" in Wt. Col. 13 not to be billed to customer.

NOTES:
MATERIAL: O. H. Steel Card 855
SPECIFICATIONS: Maine State Highway Commission
INSPECTION: P. T. L.
ERECTION: A. B. Co.

RIVETS 7/8
OPEN HOLES 1⅛ Unless Noted
Reaming: Holes marked R.T. to be punched 1/16" and reamed to size thru a metal template.

State of Maine
Maine Kennebec Bridge
over Kennebec River
between
Richmond & Dresden
4-SPANS 200'-0 C to C

AMERICAN BRIDGE CO.
AMBRIDGE PLANT
Design made at Ambridge No. 3 in charge of Nichols
Detailed by J.W.E. Date 11-12-30 Checked by R.L.S. Date 11/24/30
Fld. corr. chk. by ... Date ...
ORDER NO. G3881-S SHEET NO. 7

Rev. 1-26-31 E.C.H.

13-5

0 1 2 3 4 5 INCHES

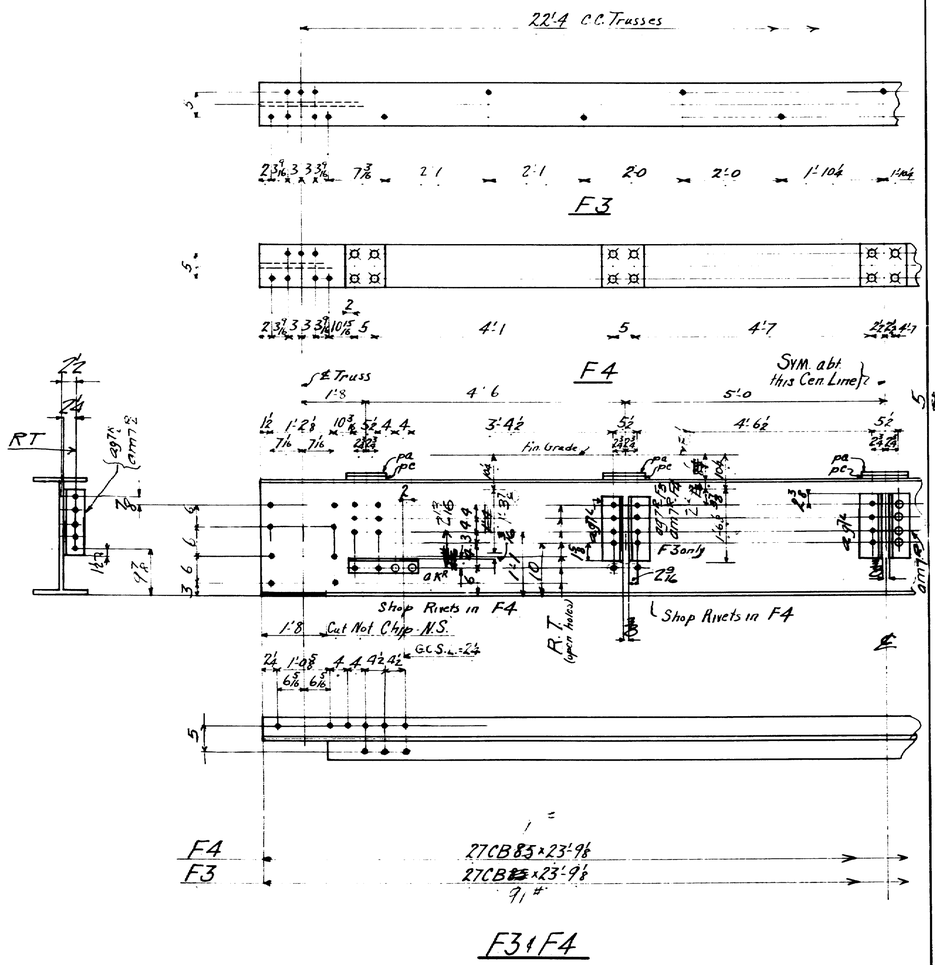

F3 & F4

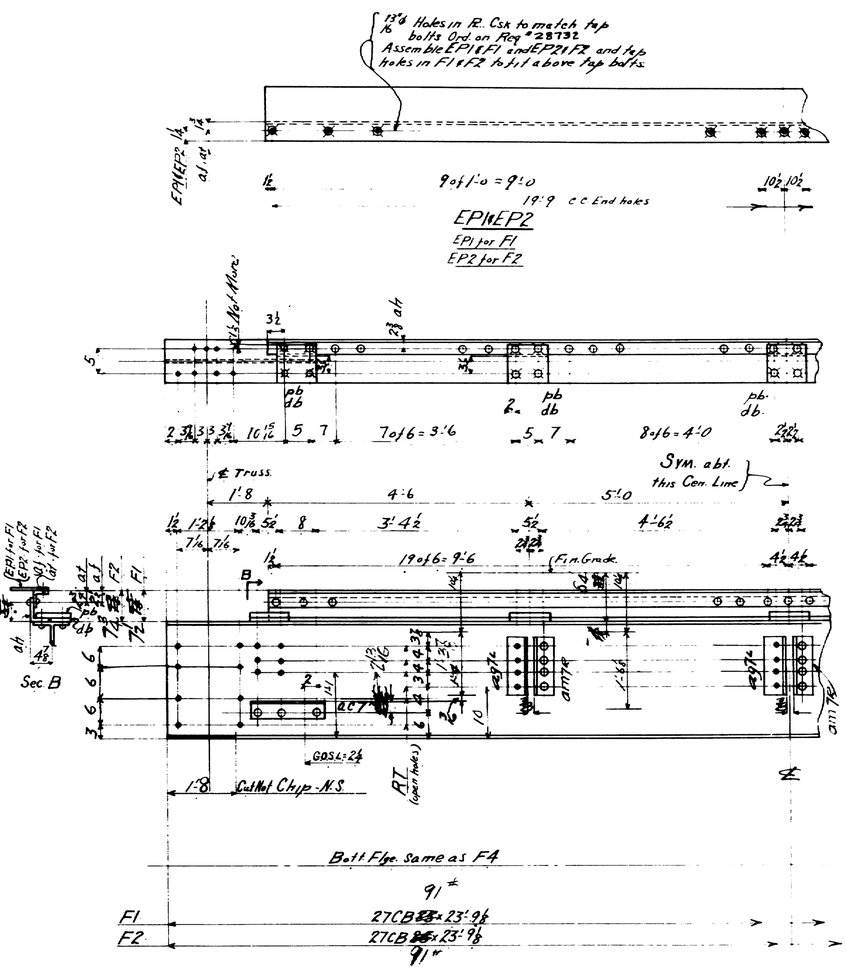

F1 & F2

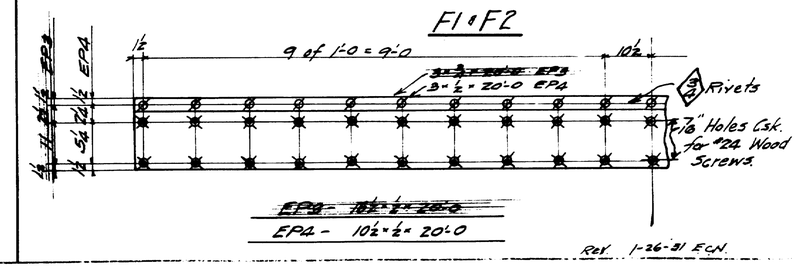

Rev. 1-26-31 E.C.N.

4 Floor Beams 2-F3, 2-F4

4	27CB85	23 9⅛			23'-9¼	2
10	PL	9 ⅞	10	pa	F4	S
4	Ls	4 3½ 5/16	1 4½	ak^R	40'-1	31
4	Ls			ak^L		
40	T.B. 7/8 ⌀					S
10	PL	9 ⅞	10	pc	F4	S
4	Ls	4 3½ 7/16	1 3	ag7^R	F3	
6	Ls		1 3	ag7^L	F3	
2	L	4 3½ 7/16	1 3	am7^R	F3	
2	L			ag7^R	F4	
4	L			ag7^L	F4	
4	L			am7^R	F4	
2	L			am7^L	F4	

4 Floor Beams 2-F1, 2-F2

4	27CB85	23 9⅛			23'-9¼	2
12	Ls	4 3½ 7/16	1 3	4-ag7^R 8-ag7^L		
4	Ls	4 3½ 7/16	1 4½	ac7^R	40'-1	31
4	Ls			ac7^L		
4	Ls	7 3½ ½	20 0	ah	20'-0	27
2	Ls	4 3 ½	20 0	af	F1 20'-0	32
2	Ls	4 3 ½	20 0	af	F2	32
24	T.B. 7/8 ⌀					S
20	Fils	9 ½	6	db		S
20	PL	9 1¼	9	pb	1-15'-1	51
12	L	4 3½ 7/16	1 3	8-am7^R 4-am7^L		

4 Expansion Plates 2-EP1, 2-EP2

2	PL	19 ¾	20 0	EP1	20'-0 70
2	PL	12 ½	20 0	EP2	20'-0 82
2	Pls	16½ ½	20 0	2-EP3	20-0 85
2	bars	3 ¾	20 0		20-0 84
2	Pls	10½ ½	20 0	2-EP4	20-0 86
2	bars	3 ½	20 0		S

—NOTE—
Erection material marked (X) in Wgt. Col. is not to be billed to Customer.

NOTES:
MATERIAL: O. H. Steel Card 855
SPECIFICATIONS: Maine State Highway Commission
INSPECTION: P. T. L.
ERECTION: A. B. Co.

RIVETS ⅞ Unless noted
OPEN HOLES 15/16 Unless Noted
Reaming: Holes marked R.T. to be punched ⅛" ⌀ and reamed to size thru a metal templet or while parts are assembled.

State of Maine
Maine Kennebec Bridge
over Kennebec River
between
Richmond & Dresden
4-SPANS 200'-0 Ctr. C.

AMERICAN BRIDGE CO.
AMBRIDGE PLANT
Dwgs. made at Ambridge No. 3 in charge of Nichols
Detailed by JWE Date 11-12-30 Checked by RLS Date 11/25/30
Fin. serv. chk. by [illegible] Date
ORDER NO. G3821-S SHEET NO. 8

13-59

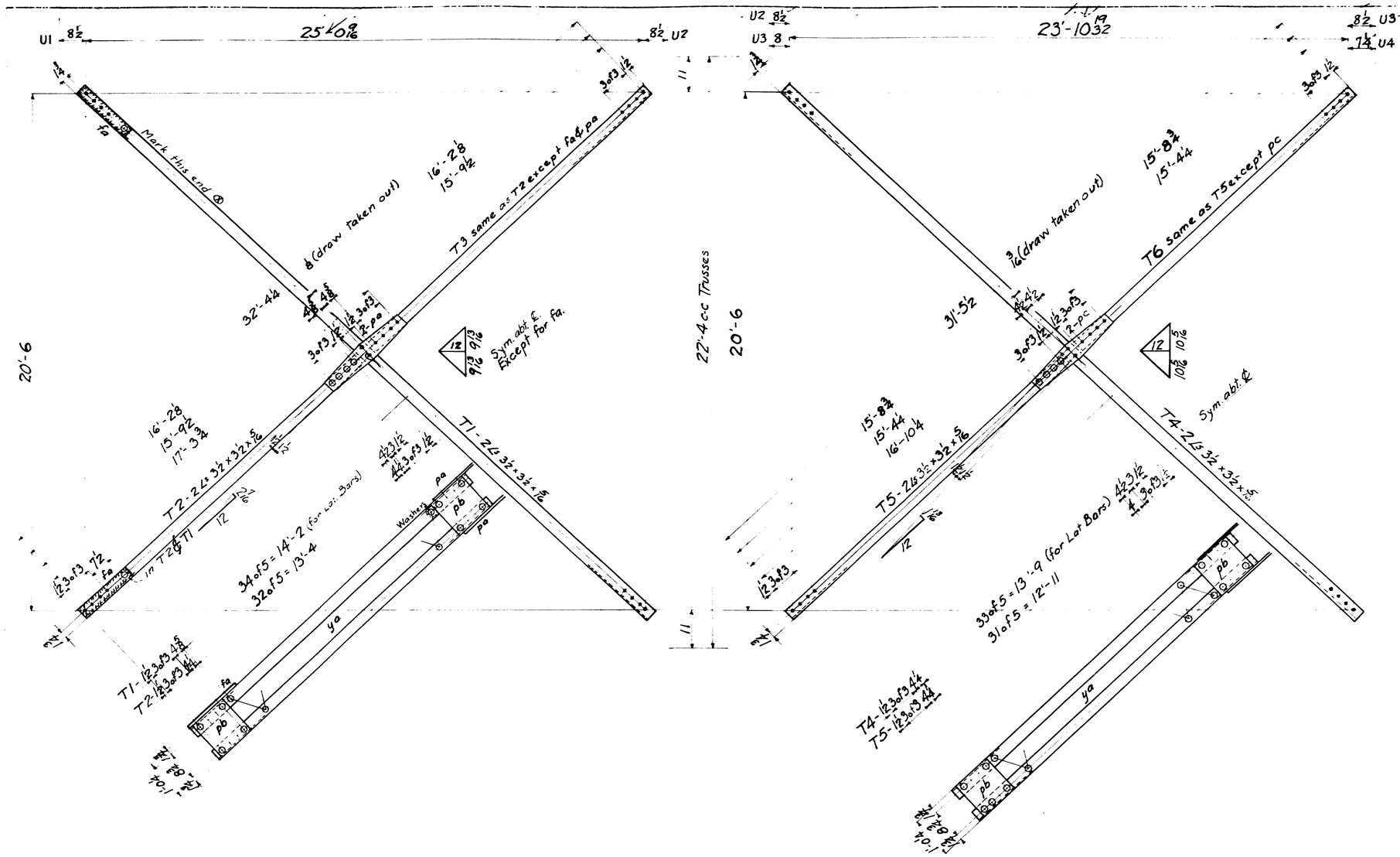

AMERICAN BRIDGE COMPANY

8 Top Laterals T1

16	Ls	3½	3½	5/16	32	7¼		32-7¼ 46
168	PB	24		12	7/8	0	11¾ pb	5
3008	Bars	2¼	3/8	0	10⅛		ya c-c Holes	5
16	Fills	3½	¼	1	7½		fa	5
16	Wash	2½	3/8	0	13/16		holes	5

8 Top Laterals T2

16	Ls	3½	3½	5/16	16	0½		16-0½ 49
16	PB						pb	
16	PC	6	3/8	2	6¼		pa	5
256	Bars						ya	
8	Washers	2½	3/8	0	13/16		holes	5
8	Fills						fa	

8 Top Laterals T3

16	Ls	3½	3½	5/16	16	0½		16-0½ 49
16	PB						pb	
256	Bars						ya	
8	Wash	2½	3/8	0	13/16		holes	5

16 Top Laterals T4

32	Ls	3½	3½	5/16	31	8½		31-8½ 47
48	PB						pb	
1056	Bars						ya	

16 Top Laterals T5

32	Ls	3½	3½	5/16	15	7¼		15-7¼ 50
32	PB						pb	
32	PB	6	3/8	2	6		pc	5
496	Bars						ya	

16 Top Laterals T6

32	Ls	3½	3½	5/16	15	7¼		15-7¼ 50
32	PB						pb	
496	Bars						ya	

NOTES:
MATERIAL: O. H. Steel Card 855
SPECIFICATIONS: Maine State Highway Commission
INSPECTION: P. T. L.
ERECTION: A. B. Co.

RIVETS 3/4" dia.
OPEN HOLES 13/16" dia.

State of Maine
Maine Kennebec Bridge
over Kennebec River
between
Richmond & Dresden
4-SPANS 200-0 C to C.

AMERICAN BRIDGE CO.
AMBRIDGE PLANT
Dwgs. made at Ambridge No. 3 in charge of Nichols
Detailed by [illegible] Date 11-5-30 Checked by RJH Date 11-26-30
Fin. conn. chkd. by [illegible] Date
ORDER NO. G3821-S SHEET NO. 9

13-60

0 1 2 3 4 5 INCHES

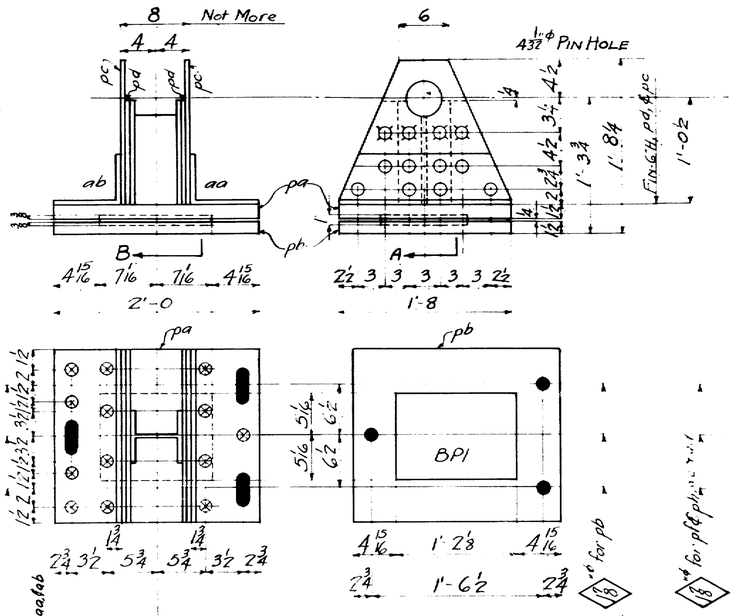

EXPANSION SHOE ES1

EXPANSION PLATE BP1

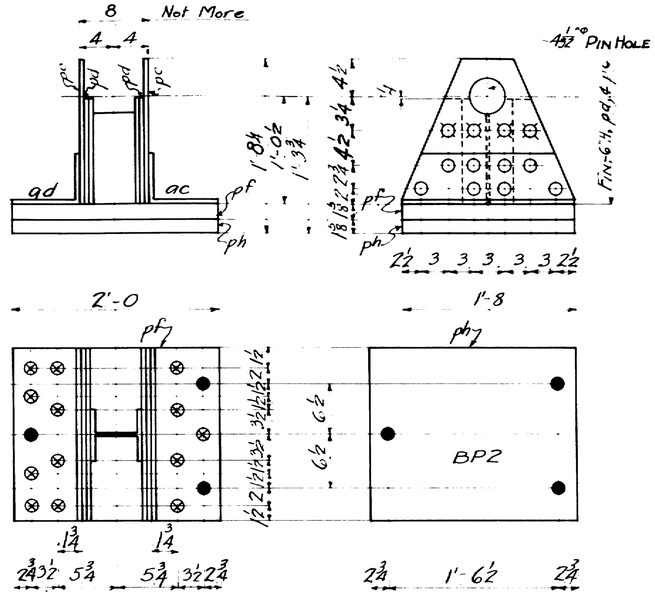

FIXED SHOE FS1

FIXED PLATE BP2

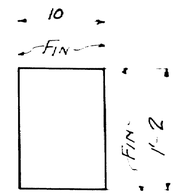

BRONZE PLATES BP3

G3821-b

G3821-5

8 EXPANSION SHOES ES1

8	Hs 6	27.5	1	0 1/4		FIN 1 END	19'-1 26
32	16 Ps	20 1/2	1	5	pc	FIN 1 END	3-30'-1 67
32	16 Ps	20 1/2	1	0 1/4	pd	FIN 1 END	67
8	Ls 8	6 5/8	1	8	aa		S
8	Ls 8	6 5/8	1	8	ab		S
8	Ps	20 1/2	2	0	pa		2-16'-2 66

8 FIXED SHOES FS1

8	Hs 6	27.5	1	0 1/4		FIN 1 END	19'-1 26
16	Ps	20 1/2	1	5	pc	FIN 1 END	/
16	Ps	20 1/2	1	0 1/4	pd	FIN 1 END	/
8	Ls 8	6 5/8	1	8	ac		S
8	Ls 8	6 5/8	1	8	ad		S
8	Ps	20 1 5/8	2	0	pf		2-16'-2 65

8 EXPANSION PLATES BP1

8	Ps	20 1/2	2	0	pb		16'-2 66

8 FIXED PLATES BP2

8	Ps	20 1 5/8	2	0	ph		16'-2 65

16 PINS LO

16 Pins 4" ϕ (FIN) 1 1 3/8		S
32 Pin Nuts	PN24	S

2-Pilot Nuts - PL16 S

2-Driving Nuts - PD6 S

G3821-b { 16 Bronze Plates BP3 10 1/2 x 1/2 1'-2 1/2 Reg. FIN 4 EDGES. #28622

16 Ps 10 1/2 1 2

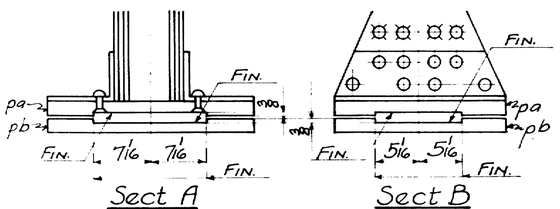

Sect A

Sect B

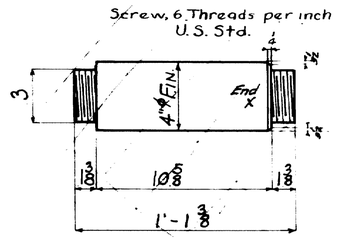

PINS-LO

NOTES:
MATERIAL: O. H. Steel Card 855
SPECIFICATIONS: Maine State Highway Commission
INSPECTION: P. T. L.
ERECTION: A. B. Co.

RIVETS 3/4" dia.
OPEN HOLES as noted

State of Maine
Maine Kennebec Bridge
over Kennebec River
between
Richmond & Dresden
4-SPANS 200'0 CtC.

AMERICAN BRIDGE CO.
AMBRIDGE PLANT
Dwgs. made at Ambridge No. 3 in charge of Nichols
Detailed by [illegible] Date 11-10-30 Checked by [illegible] Date [illegible]
Fla. conn. chk. by [illegible] Date
ORDER NO. G3821-S SHEET NO. 10

13-61

0 1 2 3 4 5 INCHES

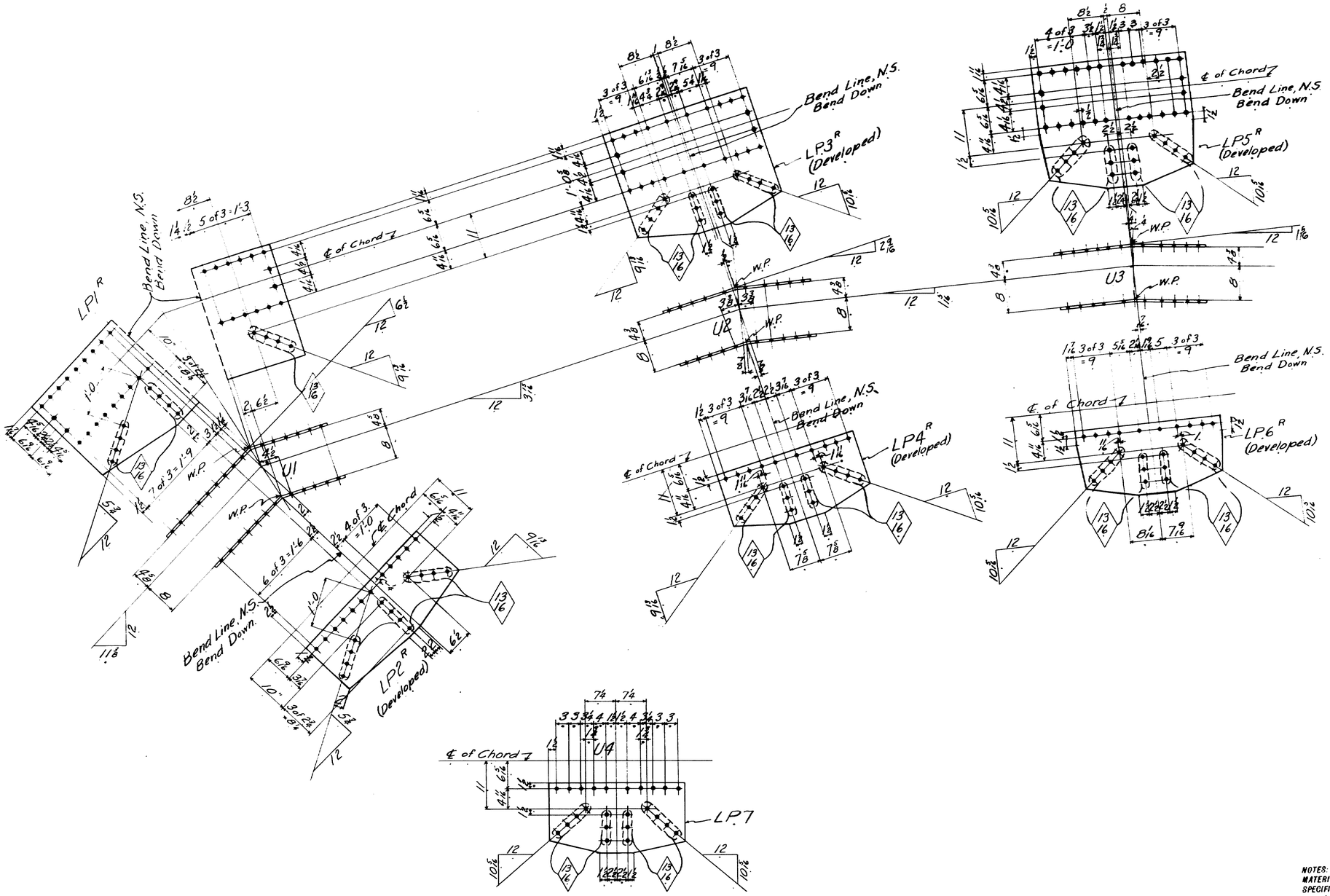

TOP LATERAL PLATES

8 Pls.	28 3/8	3	11 1/2	8-LP1R	2-31'-9	58
8 Pls.	28 3/8	3	11 1/2	8-LP1L		58
8 Pls.	15 3/8	3	3	8-LP2R		5
8 Pls.	15 3/8	3	3	8-LP2L		5
8 Pls.	28 3/8	3	0	8-LP3R	24'-1	59
8 Pls.	28 3/8	3	0	8-LP3L		59
8 Pls.	17 1/2 3/8	2	9	8-LP4R	2-22'-1	73
8 Pls.	17 1/2 3/8	2	9	8-LP4L		73
8 Pls.	28 3/8	3	1	8-LP5R	2-21'-7	60
8 Pls.	28 3/8	3	1	8-LP5L		60
						5
8 Pls.	17 3/8	2	11	8-LP6R	2-23'-5	75
8 Pls.	17 3/8	2	11	8-LP6L		75
16 Pls.	17 3/8	2	8 1/2	16-LP7	2-21'-9	76

NOTES:
MATERIAL: O. H. Steel Card 855
SPECIFICATIONS: Maine State Highway Commission
INSPECTION: P. T. L.
ERECTION: A. B. Co.

RIVETS None
OPEN HOLES 15/16 unless noted
Spacing not given 3"

State of Maine
Maine Kennebec Bridge
over Kennebec River
between
Richmond & Dresden
4-SPANS 200'-0 C to C.

AMERICAN BRIDGE CO.
AMBRIDGE PLANT
Dwgs. made at Ambridge No. 3 in charge of Nichols
Detailed by R.D.H. Date 11-12-30 Checked by R.L.S. Date 11/26/30
Fin. conn. chk. by Date
ORDER NO. G3821-5 SHEET NO. 11

13-62

0 1 2 3 4 5 INCHES

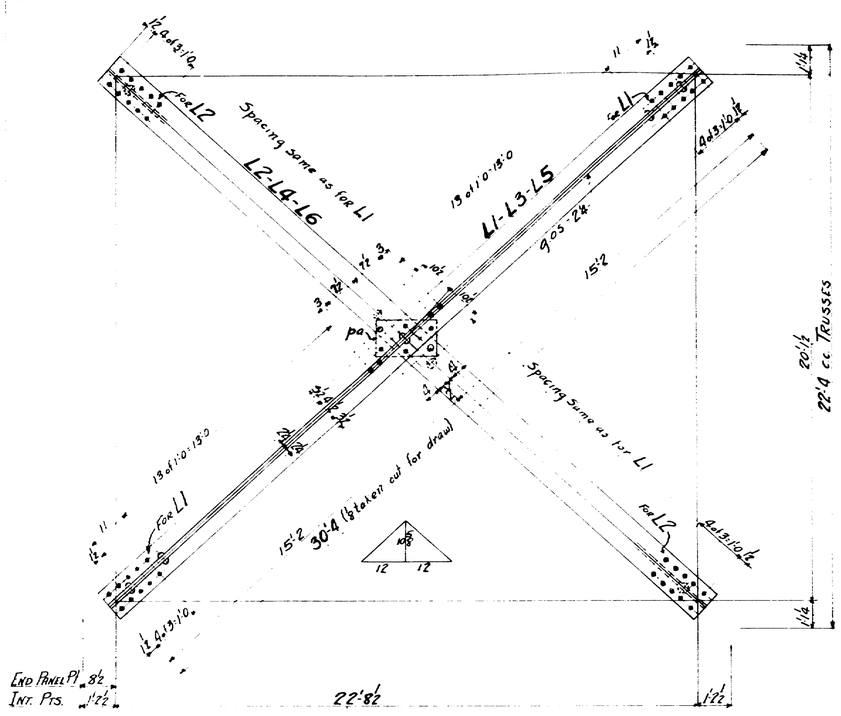

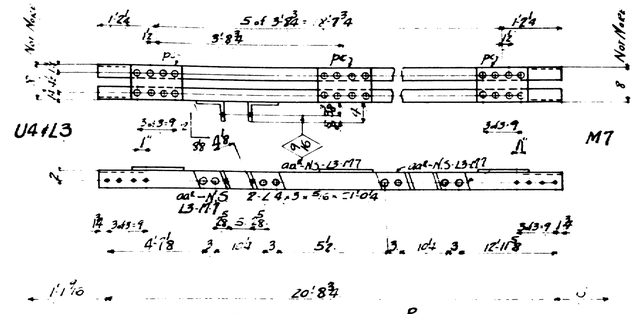

DIAGONALS-L3-M7R & M7-U4

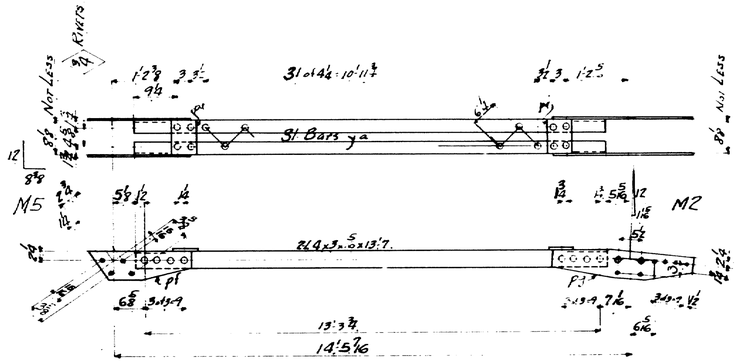

STRUT-M5-M2

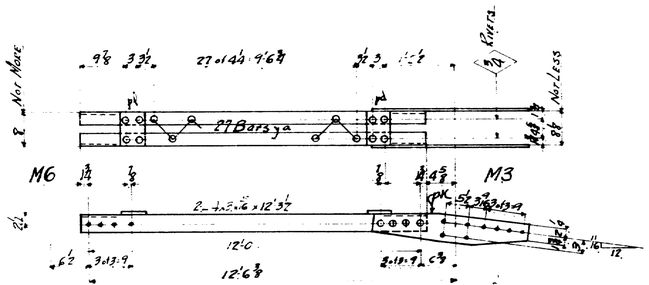

STRUT-M6-M3

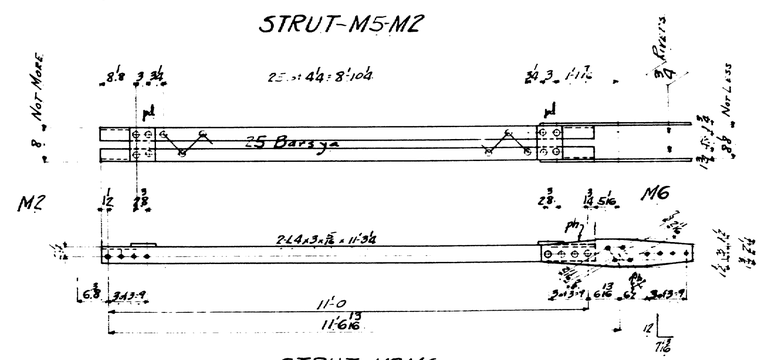

STRUT-M2-M6

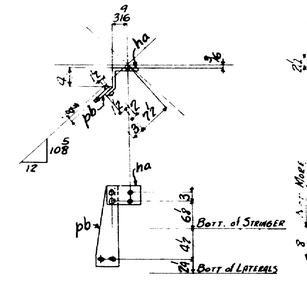

LATERAL SUPPORT — LS1

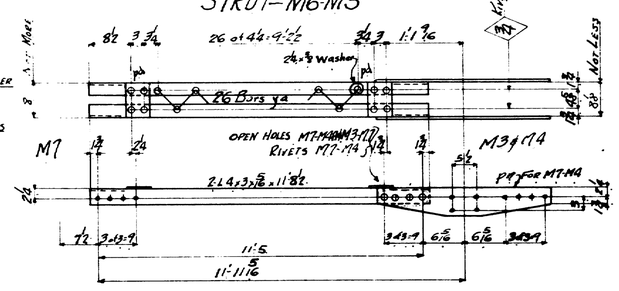

STRUTS-M3-M7 & M7-M4 & M7-M4A.

8-LATERALS — L1
16 L 4 4 ⅜ 30 7 — 32-30'-7 28

8-LATERALS — L2
16 L 4 4 ⅜ 30 7 — 28
32 8 PL 9 ⅜ 1 3½ pa — S

8-LATERALS — L3
16 L 4 4 5/16 30 7 — 32-30'-7 30

8-LATERALS — L4
16 L 4 4 5/16 30 7 — 30
8 PL 9 ⅜ 1 3½ pa — /

16-LATERALS — L5
32 L 3½ 3½ 5/16 30 7 — 64-30'-7 48

16-LATERALS — L6
32 L 3½ 3½ 5/16 30 7 — 48
16 PL 9 ⅜ 1 3½ pa — /

64-LATERAL SUPPORTS - LS1
64 L 8 6 7/16 6 ha (bent) 1-32'-2 1
64 PL 6 ⅜ 1 4¾ pb — S

16 STRUTS. M5-M2
32 L 4 3 5/16 13 7 — 32-13'-7 42
160 32 PLs 6 5/16 7½ pd — S
2160 496 Bars 2¼ 5/16 6¼ ya c.c. — S
32 PLs 7 5/16 1 10 pf — S
32 PLs 7 5/16 2 10¼ pg — S

16 STRUTS. M2-M6
32 L 4 3 5/16 11 3¼ — 11'-3¼ 45
32 PL 6 5/16 7½ pd — /
400 Bars ya — /
32 PL 6 5/16 2 10¼ ph — S

16 STRUTS M6-M3
32 L 4 3 5/16 12 3½ — 12'-3½ 43
32 PL 6 5/16 7½ pd — /
432 Bars ya — /
32 PL 7 5/16 2 9¾ pk — S

16 STRUTS M3-M7
16 STRUTS 8-M7-M4 / 8-M7-M4A
64 L 4 3 5/16 11 8½ — 11'-8½ 44
64 PL 6 5/16 7½ pd — /
832 Bars ya — /
16 PL 7 5/16 2 9⅝ pn for M7-M4 — S
32 ⊙ 2¼ ⅜ — S

16 DIAGONALS. 8-L3-M7R / 8-L3-M7L
16 DIAGONALS M7-U4
64 L 4 3 5/16 21 0¼ — 21'-0¼ 39
192 PL 12 5/16 7½ pc — S
32 L 6 4 ⅜ 8⅞ aaR } for L3-M7L — S
32 L 6 4 ⅜ 8⅞ aaL } — S

NOTES:
MATERIAL: O. H. Steel Card 855
SPECIFICATIONS: Maine State Highway Commission
INSPECTION: P. T. L.
ERECTION: A. B. Co.

RIVETS - 7/8 — UNLESS NOTED
OPEN HOLES 15/16 — UNLESS NOTED

State of Maine
Maine Kennebec Bridge
over Kennebec River
between
Richmond & Dresden
4-SPANS 200'-0 C to C.

AMERICAN BRIDGE CO.
AMBRIDGE PLANT
Dwgs. made at Ambridge No. 3 in charge of Nichols
Detailed by G.L.L. Date 11-17-30 Checked by Date
Fin. conn. chk. by Date
ORDER NO. G3821-S SHEET NO. 12

13-63

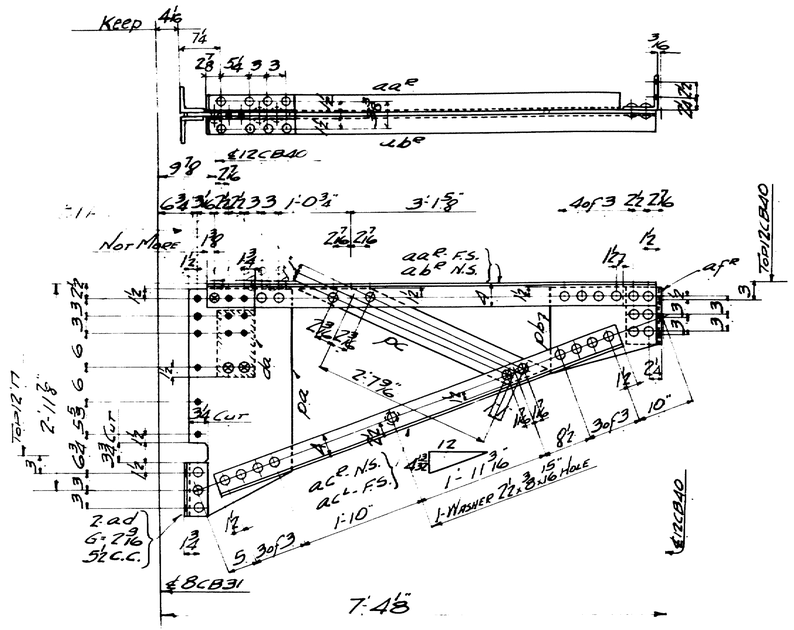

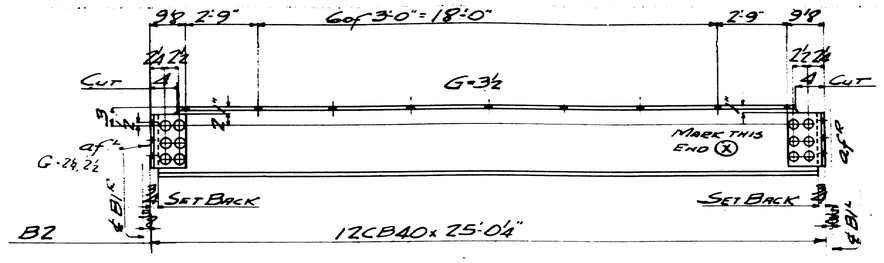

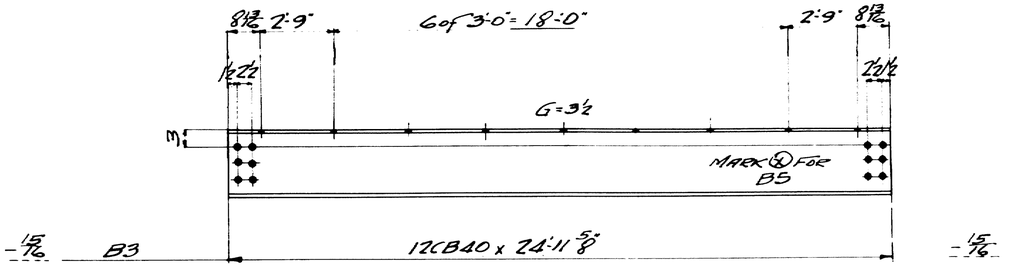

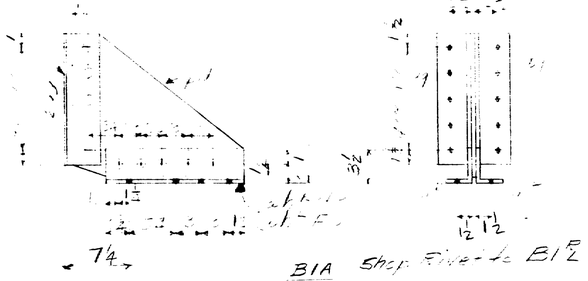

4-BRACKETS 2-B1R, 2-B1L

	4	L	4	3	3/8	6 1/4	aa^R
	4	L	4	3	3/8	6 3/4	ab^R
4-R 4-L	4	L	4	3	3/8	6 1/16	ac^R
	4	L					ac^L
	8	L	4	3½	3/8	9	ad
4-R 4-L	4	L	6	6	½	9½	af^R
	4	PL	6	3/8		11 3/8	de
	4	R	18	3/8		3 3/8	pa
	4	R	14	3/8		1 6½	pb
	4	R	5	3/8		3 9½	pc
	4	Washers 2¼ x 3/8 x 15/16 Hole					

237533	
1-26434	
33	
5	
5	
5	
5	
5	
5	
5	

2-BEAM-B2-

212CB40	250#	1911 2411 7
2 L 6 6 ½	9½ af^R	
2 L	af^L	

2-BEAM-B3-

212CB40	241# 3	2411 3 6

4 BRACKETS B1A

4	PL	10	3/8		1 6 3/4	pd	
8	L	4	4	3/8	1 3	29	
4	L	4	3	3/8	1 3 2	ae^R	
4	L	4	3	3/8	1 3 2	ae^L	

NOTES:
MATERIAL: O. H. Steel Card 855
SPECIFICATIONS: Maine State Highway Commission
INSPECTION: P. T. L.
ERECTION: A. B. Co.

RIVETS ⅞
OPEN HOLES 15/16

State of Maine
Maine Kennebec Bridge
over Kennebec River
between
Richmond & Dresden
4-SPANS - 200'-0 C to C.

AMERICAN BRIDGE CO.
AMBRIDGE PLANT
Dwgs. made at Ambridge No. 3 in charge of Nichols
Detailed by HAT Date 11-20-30 Checked by Date
Fld. conn. chk. by Date
ORDER NO. G3821-S SHEET NO. 13

13-64

0 1 2 3 4 5 INCHES

LINE NO.	NUMBER OF PIECES	DIAM	RIVETS		BOLTS				REMARKS
					LENGTH UNDER HEAD	HEAD	NUT	TYPE OF BOLT	
1									
2	790	7/8	2 1/8						
3	4640	7/8	2 1/4						
4	2840	7/8	2 3/8						
5	2350	7/8	2 1/2						
6	2235	7/8	2 5/8						
7	3140	7/8	2 3/4						
8	1975	7/8	2 7/8						
9	360	7/8	3 1/8						
10	1350	7/8	3 1/4						
11	1040	7/8	3 1/2						
12	20	7/8	3 5/8						
13	20	7/8	3 3/4						
14									
15	20	7/8			3	Hex	Hex	Ordinary	
16									
17	550	3/4	2						
18	1970	3/4	2 1/8						
19	65	3/4	2 1/4						
20	110	3/4	2 3/8						
21	190	3/4	2 1/2						
22	490	3/4	2 5/8						
23									
24	45	Csk. Head Tap Screws - 3/4 x 1 1/4							EP1 to Flbm } Ambridge Req. No. 28732
25	45	" " " "				3/4 x 1		"	EP2 to Flbm }
26									
27	2	A.B.Co. Standard Name Pls. Pattern A1							
28		With Bolts for Same							
29									2'-0
30	48	Swedge Bolts - 1 1/2 x 2'-0							
31	48	Hex. Nuts - 1 1/2 Tap							
32	48	Washers - 3 x 3/8			⊗ 1 9/16 Hole				

State of Maine
Maine Kennebec Bridge
over Kennebec River
between
Richmond & Dreeden

AMERICAN BRIDGE CO.
AMBRIDGE PLANT

Dwgs. made at Ambridge No. 3 in charge of Nichols
Detailed by [illegible] Date [illegible] Checked by [illegible] Date [illegible]
Fld. conn. chk. by Date
ORDER NO. G3821-5 SHEET NO. 14

(33) 13-65

0 1 2 3 4 5 INCHES

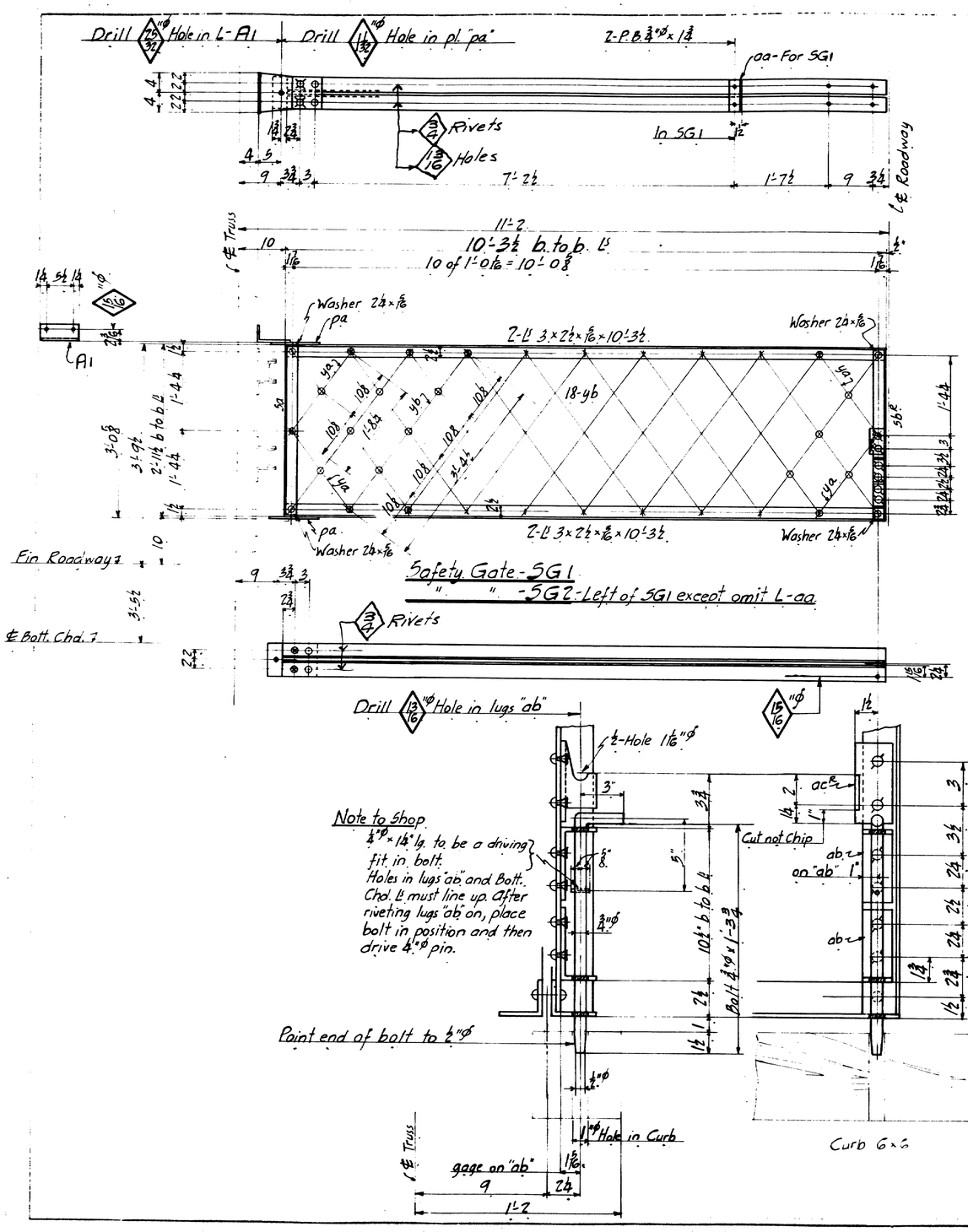

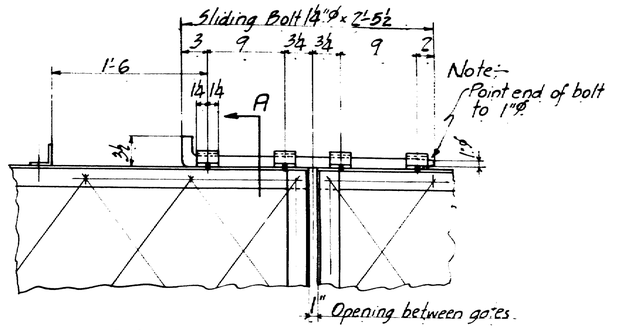

Enlarged Detail showing gates closed with sliding bolt in locked position.

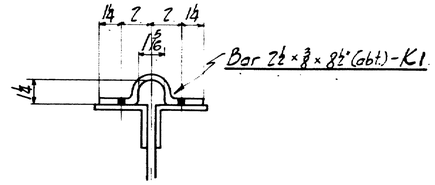

Sec. A

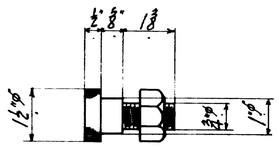

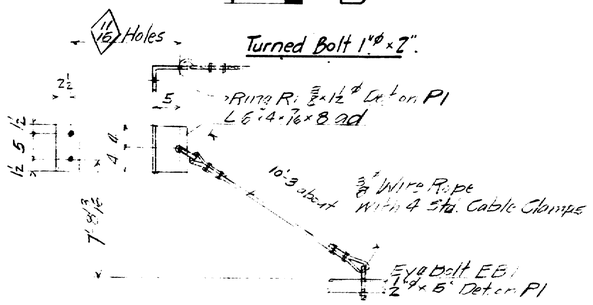

Gate Hanger Assembly GA1

4-Safety Gates 2-SG1 2-SG2

16	L's	3	2 1/2	7/16	10.3 1/2	S
4	L's	2 1/2	2 1/2	1/8	2 10 1/2 sa	S
4	L's	2 1/2	2 1/2	1/8	2 10 1/2 sbc	S
4	L's	2 1/2	2 1/2	1/8	5 1/2 sc	S
8	L's	5	2 3/8	1/8	2 ab Cut 5 x 3 x 1/8	S
4	Bolts	1 1/4"ø	x	1	2 (abt.) Bent Meas. on ℄	S
4	Pins	4"ø	x		1 1/4	S
16	Bars	1 1/2	1/8	1	8 4 ya ctoc	S
72	"	1 1/4	1/8	3	4 2 yb ctoc	S
8	Pls	10	1/2		6 3/8 pa	S
2	L's	2 1/2	2 1/2	1/8	6 3/8 aa For SG1	S
16	Washers	2 1/2"ø x		1/8	1/8"ø Holes	S
4	P.B.	3/4"ø x			1 1/2 H.H. + N	S

8-Angles - A1

8	L's	7	3 1/2	7/8	8	S

8-Keepers - K1

8	Bars	2 1/2	3/8	8 1/2 (abt.)	Bent Meas. on ℄	S
16	Bolts	3/4		1 3/4	H.H. + N.	S

Turned Bolts

8	Bolts	1"ø x	2	Round Hd.	S
8	Hex Nuts			3/4"ø Top	S

2-Bolts

2	Bars	1 1/4"ø x	2 8 (abt.)	Bent Meas. one ℄	S

1 Gate [illegible]
1 - 4 6 [illegible]
4 Eye Bo [illegible]
4 Ring 3/8 [illegible]
As Clamp [illegible]
[illegible] 3/8 x [illegible]

NOTES:
MATERIAL: O.H. Steel Card 855
SPECIFICATIONS: Maine State Highway Commission
INSPECTION: P.T.L
ERECTION: A.B.Co.

RIVETS: 1/2" dia. Unless Noted
OPEN HOLES: 13/16" dia. Unless Noted

State of Maine
Maine Kennebec Bridge
over Kennebec River
between
Richmond & Dresden

AMERICAN BRIDGE CO
AMBRIDGE PLANT
Dwgs. made at Ambridge No. 3 in charge of C.E. Nichols
Detailed by R.L.S. Date
Checked by E.C.M. Date
Fld. meas. by
Date
ORDER NO. G3821-S
SHEET No. 13

Rev. 4-23-31 E.C.M.
Rev. 5-9-31 E.C.M.

0 1 2 3 4 5 INCHES

13

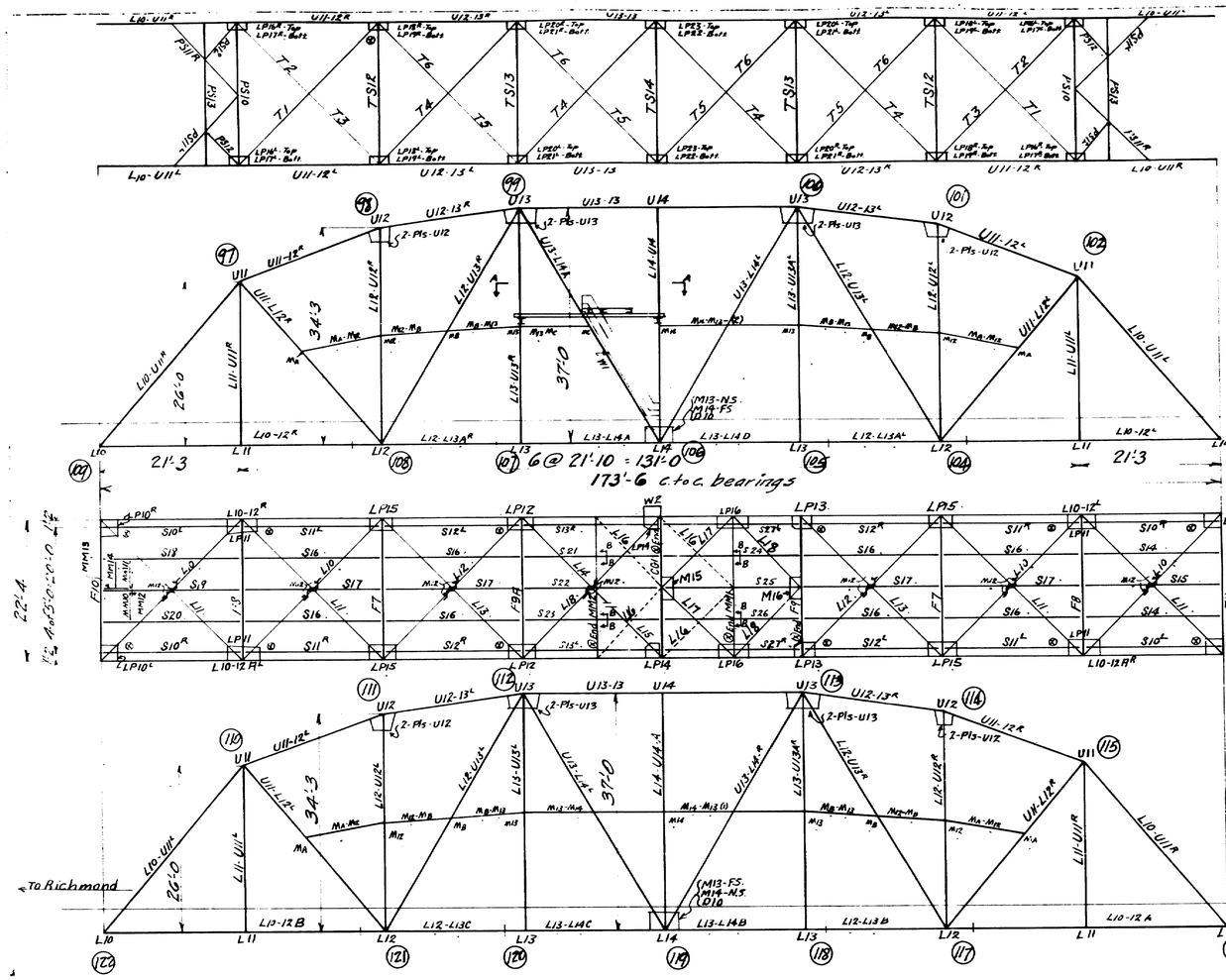

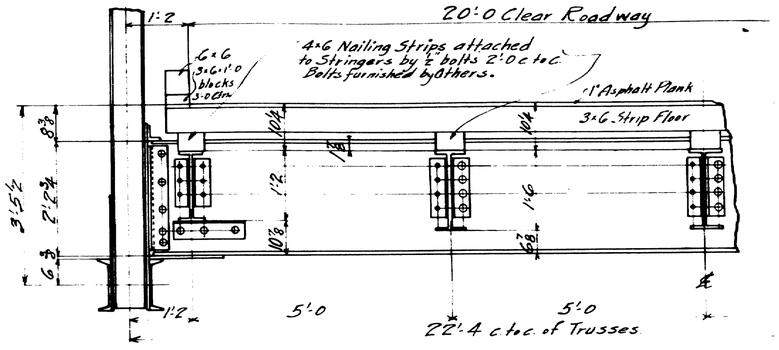

CROSS SECTION

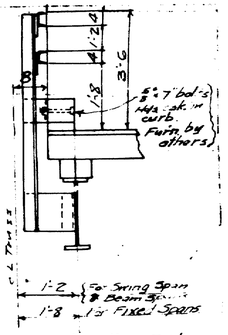

Section thru Railing Posts for Span 2 bridge.

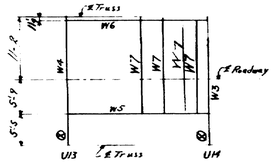

Sec. A-A

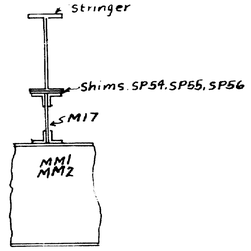

SEC. BB

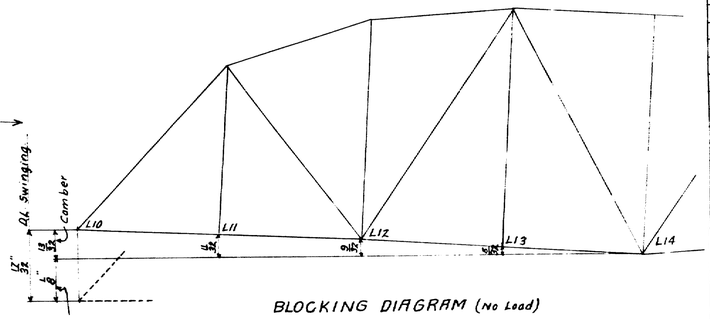

BLOCKING DIAGRAM (No Load)

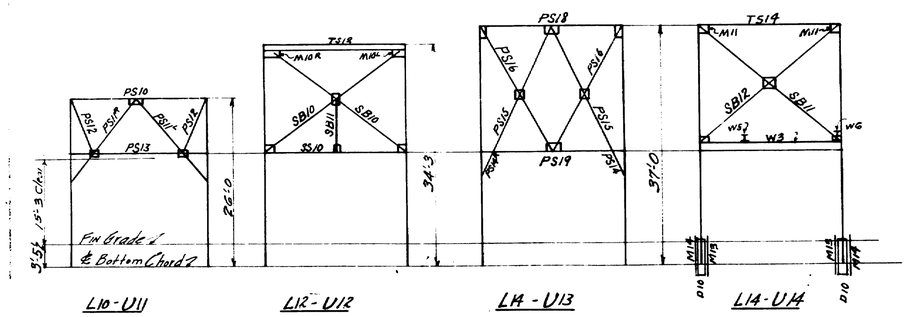

Sections taken looking towards ℄ span.

Note to Erector:

Erect Batt. Lats. L10 & L12 with O.S.L. turned up.

Ⓧ End of Stringers to be toward end of Span except S12 as shown.

See Sheet #22 for Erection marks of Hand Rail & Posts.

M13-M14 to be erected before U13-13
M14-M13 Ⓓ
M14-M13 Ⓔ
See note on G3823 Sheet E2 regarding riveting of L14 and L15 to mach. Strut MM7.

All material must be erected exactly as match marked.

List of DRAWINGS

E1	Erection Plan	
E2	Erection Diag.	
1	End Pin & Top Chords	
2	Top Chords	
3	Bott. Chords	
4	"	
5	Diagonals	
6	Web Members	
7	Portals & Sway Bracing	
8	" "	
4	Top Laterals	
10	Center Girder	
11	Stringers & Fl. Beams	
12	"	
13	Bott. Laterals	
14	" " & Web Members	
15	End Fl. Beams & Lat. Supports	
16	Top Lat. Pin Plates	
17	Struts & Hanger Supports	
18	Machinery Beams	
19	"	
20	"	
21	Shims	
22	Pins & Hand Railing	
23	Field Rivets & Bolts	
Dwg #23 F1	Machinery Bolts	
F2	Anchor Bolts	
F3	Summary of S.S. & Bolts	
F4 & 6	Erection Diag. F.B. Pins	

State of Maine
Maine Kennebec Bridge
over Kennebec River
between
Richmond & Dresden

AMERICAN BRIDGE CO.
AMBRIDGE PLANT
Dwgs. made at Ambridge No. 3 in charge of Nichols
Detailed by S.M. Date 7/29/30 Checked by Date
Fin. conn. chk. by Date
ORDER NO. G3822 SHEET NO. E1

13-67

Ref. for match marking numbers ECN 11/21/31

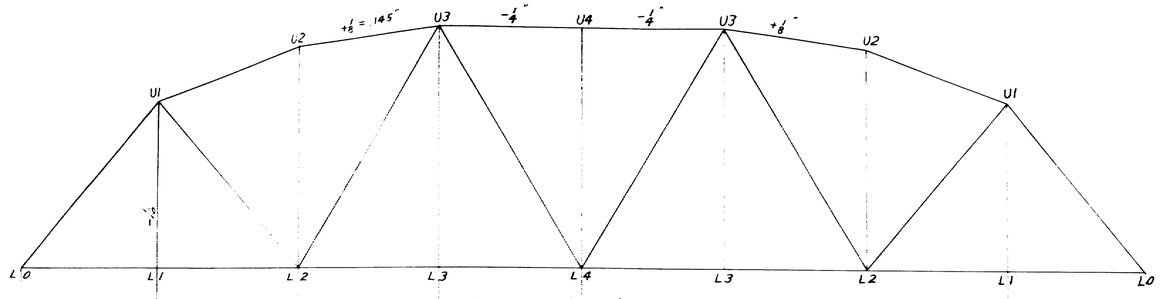

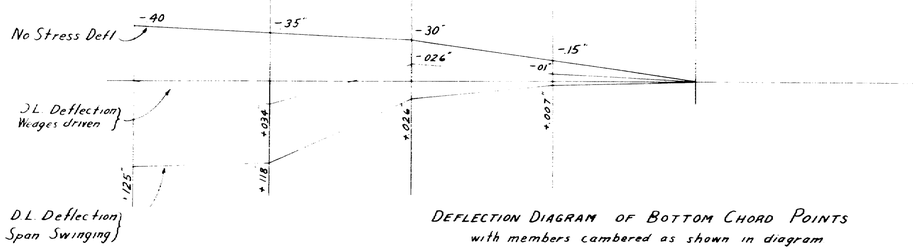

DEFLECTION DIAGRAM OF BOTTOM CHORD POINTS
with members cambered as shown in diagram

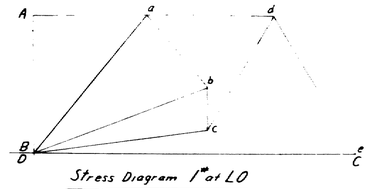

Stress Diagram 1^K at L0

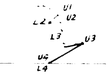

WILLIOT DIAGRAM
No Stress Members U2-U3
& U3-U4 Cambered as shown

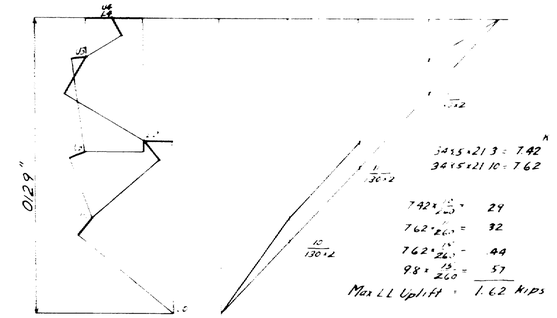

WILLIOT DIAGRAM FOR 1 KIP AT L0
Scale 1" = .003" deflection

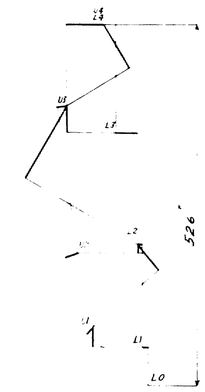

WILLIOT DIAGRAM - DL - NO CAMBER
Scale 1" = 1" defl

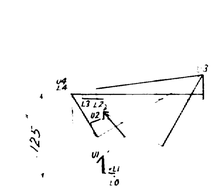

WILLIOT DIAGRAM - DL - CAMBERED
Scale 1" = 1" Defl.

1	2	3	4	5	6	7	8	9	10	11	12	13	14	15
Member	L Length in inches	A Gross Area	L/A29,000	S DL Stress Bridge Swinging	SL·d/AE (4x5)	U Stress due to 1^K at L0	SUL/AE	Camber	(7x9)	U×L/A29,000 (4x7)	U²L/A29,000 (7x11)		Change in length due to 20°Temp (14x7)	dU
L0-L1	255	12.0	.000735	-97	-.0071	-.818	+.0058			-.000602	+.000492		.034	.0278
L1-L2	262	12.0	.000753	-97	-.0073	-.818	+.0060			-.000615	+.000504		.034	.0278
L2-L3	262	17.6	.000513	-62.5	-.0321	-1.752	+.0564			-.000900	+.001580		.034	.0595
L3-L4	262	35.4	.000255	-62.5	-.0159	-1.752	+.0278			-.000447	+.000783		.034	.0595
L0-U1	403	18.0	.000773	+15.3	+.0118	+1.292	+.0153			+.00100	+.001292			
U1-L2	280	18.0	.000537	+31.9	+.0171	+1.349	+.0230			+.000720	+.000967			
U2-U3	264	18.0	.000505	+30.0	+.0151	+1.268	+.0191	+.145	+.185	+.000640	+.000810			
U3-U4	262	18.0	.000502	+111.2	+.0558	+2.345	+.1309	-.250	-.585	+.001178	+.002760			
U1-L1	312	9.1	.001180	+23.6	+.0280	0	0			0	0			
U1-L2	407.5	9.1	.001540	-31.5	-.0485	-.700	+.0340			-.00108	+.000750			
L2-U2	411	9.1	.001560	-7.5	-.0117	-.305	+.0036			-.00048	+.000147			
L2-U3	515.5	9.1	.00195	+62.5	+.1220	+.975	+.1190			+.00190	+.001850			
U3-L3	444	9.1	.00168	+23.6	+.0396	0	0			0	0			
U3-L4	515.5	23.4	.000760	-95.8	-.0728	-1.160	+.0845			-.000882	+.001020			
L4-L4	444			0		0	0			0	0			
							+.5254"		-.400 +.5254		.012955"			.1746"

$d_1 = +.5254"$ $d_2 = +.1254"$ $d_3 = .013^K$ $d_4 = .175"$

d_1 = DL Deflection of L0 - Camber not included
d_2 = D L Deflection of L0 - Camber included
d_3 = Deflection of L0 due to 1 Kip acting downward at L0.
d_4 = Deflection of L0 due to 20°F difference in Temperature between Top & Bottom Chords.

Force required to raise L0 .125" = $\frac{.125}{.013}$ = 9,600^K

Force required to raise L0 .175" (Temp) = $\frac{.175}{.013}$ = 13,500^K

MAX. LOAD WHICH END WEDGES WILL HAVE TO LIFT = 23,100^K

Note (+) indicates downward deflection

State of Maine
Maine Kennebec Bridge
over Kennebec River
between
Richmond & Dresden

AMERICAN BRIDGE CO.
AMBRIDGE PLANT
Dwgs. made at Ambridge No. 3 in charge of Nichols
Detailed by M.S Date Checked by I.A. Date
Fld. comm. chk. by Date
ORDER NO. G3822 SHEET NO. E2

13-68

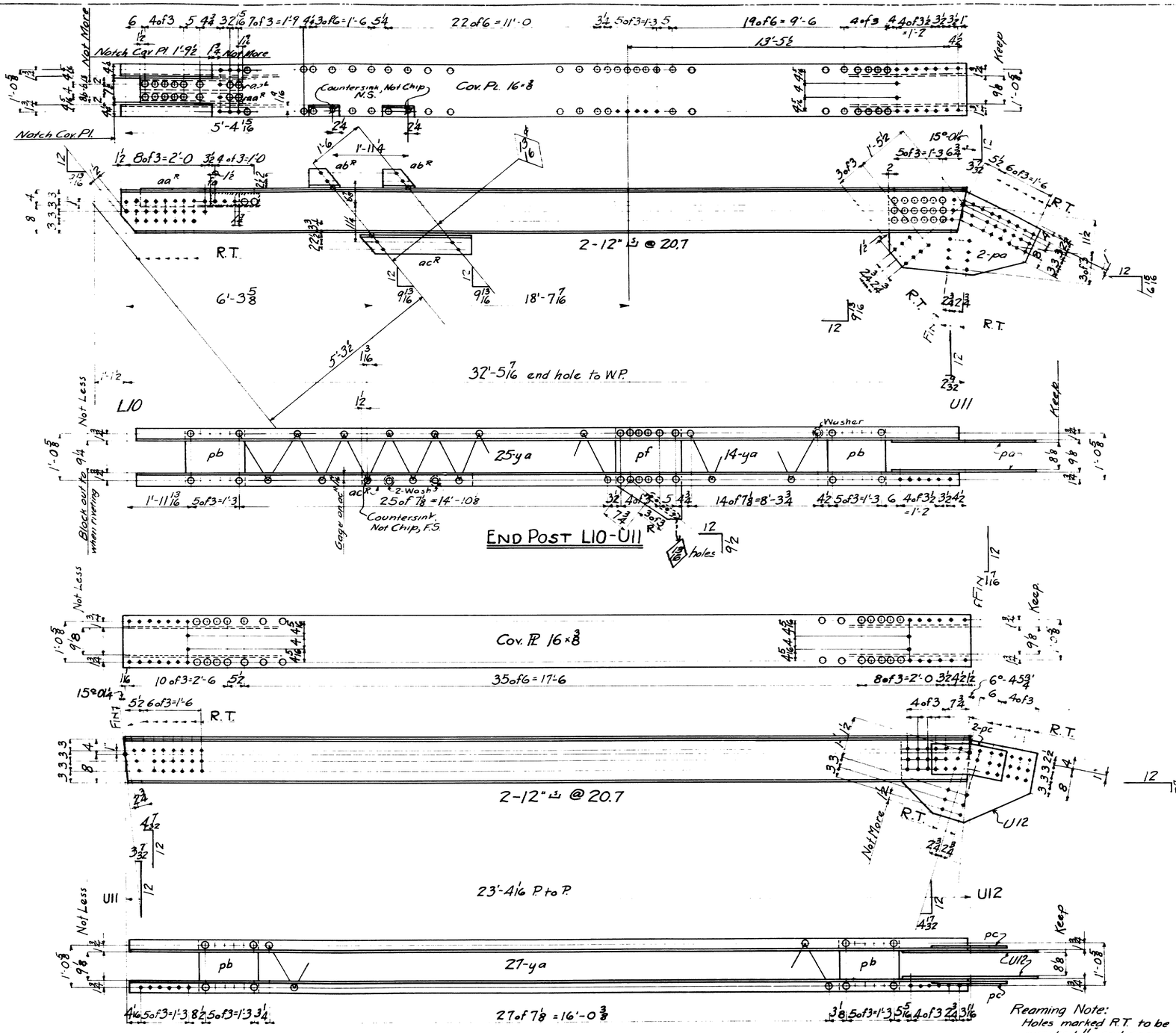

Reaming Note:
Holes marked R.T. to be punched 1/16" and reamed to 15/16" to a metal templet.

AMERICAN BRIDGE COMPANY

4 END POSTS-2L10-U11R
2L10-U11L

8	⊏s	12	20.7	32	8		Fin. 1 end 8-32'-8½	30
4	Pls		16	⅜	32	2⅛	" 1 " 4-32'-2½	82
8	⊏s	4½	3½	5/16	2	6¾ 4aaR 4aaL	cut 6×3½	S
8	Fils		4½	½	1	3	fa	S
8	⊏s	6	3	⅜	0	9¾ 4abR 4abL	cut 6×3½	S
4	⊏s	6	3	⅜	2	8¾ 2acR 2acL	cut 6×3½	S
4	Pls		20	⅜	2	2	pf	S
8	Pls		26	½	3	11½	pa	1-31'-9 75
16	8 Pls		16	⅜	1	6	pb	S
264	156 Bars		22	⅜	1	2½	c/c ya	S
20	Wash		2¼	⅜	0	15/16-6 holes		S

4 TOP CHORDS-2U11-12R
2U11-12L

8	⊏s	12	20.7	23	5⅝		Fin 2 ends 8-23'-6½	31
4	Pls		16	⅜	23	5¾	Fin. 2 ends 8-23'-6½	83
8	Pls		11	⅜	1	11½	pc	S
8	Pls						pb	
108	Bars						ya	
8	Pls		25	½	3	5	U12 1-27'-5	76

ROK 3-18-31 Ecn ⊕ Line 14 [illegible]

NOTES
MATERIAL: O. H. Steel Card 855
SPECIFICATIONS: Maine State Highway Commission
INSPECTION: P. T. L.
ERECTION: A. B. Co.

RIVETS ⅞" dia.
OPEN HOLES 15/16" dia. unless noted

State of Maine
Maine Kennebec Bridge
over Kennebec River
between
Richmond & Dresden

AMERICAN BRIDGE CO.
AMBRIDGE PLANT
Dwgs. made at Ambridge No. 3 in charge of Nichols
Detailed by [illegible] Date 11-19-30 Checked by [illegible] Date [illegible]
Fin. conn. chk. by TH. Date 12-23-30
ORDER NO. G3822- SHEET NO. 1

13-6

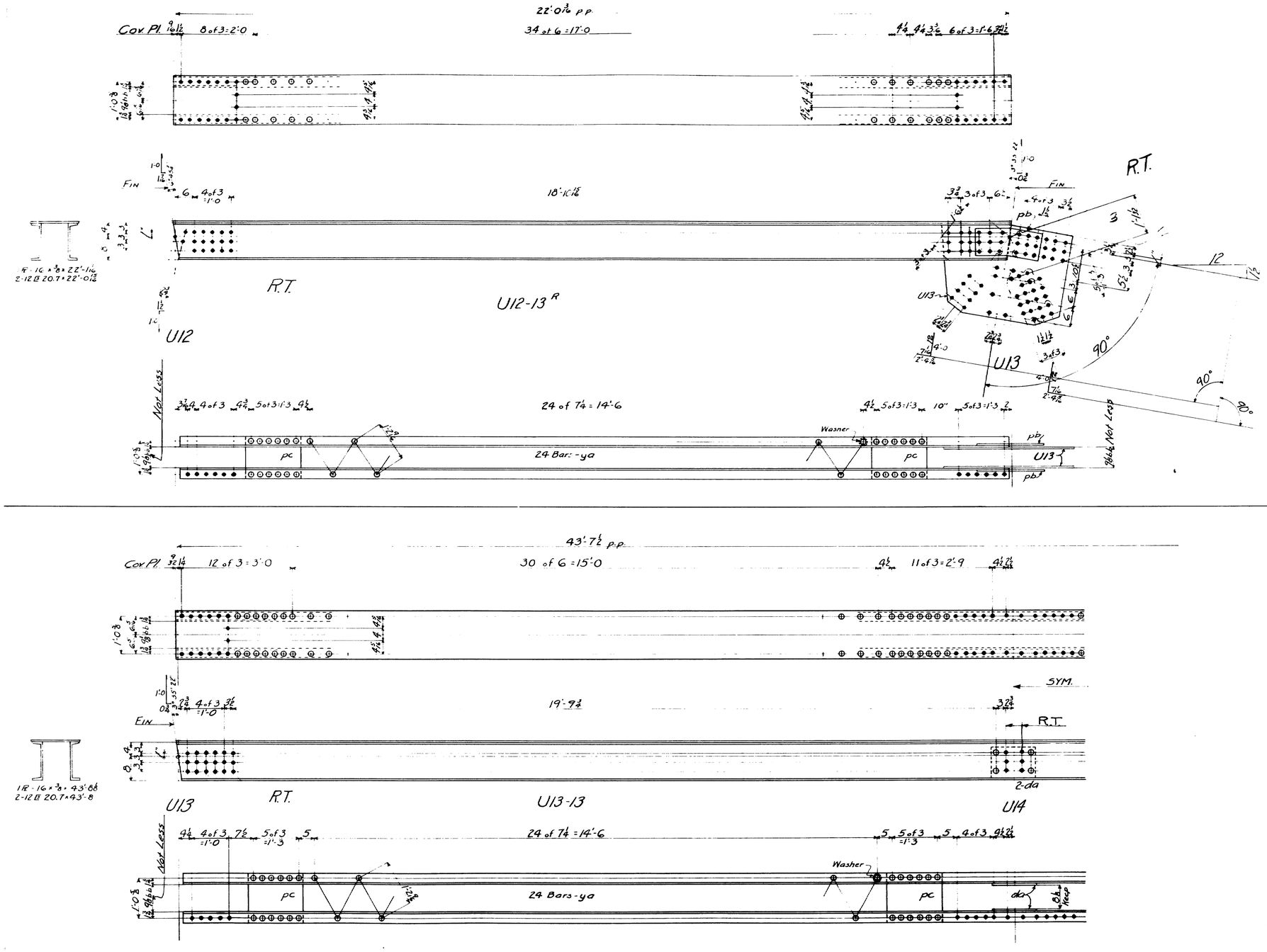

4 - Top Chords - 2 U12-13 R, 2 U12-13 L

4	R	16 3/8	22 1 1/16		Fin. - 2	8-22'-2	84
8	12 [	20.7	22 0 15/16		Fin. - 2	8-22'-2	32
16 8	R	16 3/8	1	6 pc			S
8	R	10 1/4 3/8	1	9 1/2 pb			S
192 96	Bars	2 1/2 3/8	1	2 9/16 ya	c.c. 15/16 holes.		S
4	Washers	2 1/4 x 3/8			hole		S

2 - Top Chords - U13-13.

2	R	16 3/8	43 8 1/16		Fin. - 2	2-43'-9	81
4	12 [	20.7	43 8		Fin. 2	4-43'-9	28
8	R	16 3/8	1	6 pc			/
4	Fill	10 1/2	1	2 1/2 da			S
96	Bars	2 1/2 3/8	1	2 9/16 ya	c.c. 15/16 holes		/
4	Washers	2 1/2 x 3/8		15/16 hole			S

8	R	30 1/2	3	8	U13	7-1-27'-5	71
						1-	S

NOTES:
MATERIAL: O. H. Steel Card 855
SPECIFICATIONS: Maine State Highway Commission
INSPECTION: P. T. L.
ERECTION: A. B. Co.

RIVETS 7/8
OPEN HOLES 15/16 unless noted

Reaming Note:
Holes marked RT to be punched 11/16" and reamed to 15/16 to a metal templet.

State of Maine
Maine Kennebec Bridge
over Kennebec River
between
Richmond & Dresden

AMERICAN BRIDGE CO.
AMBRIDGE PLANT
Dwgs. made at Ambridge No. 3 in charge of Nichols
Detailed by H.C.M. Date 11-20-30 Checked by Date
Fld. conn. chk. by T.H. Date 12-2-30
ORDER NO. G3822-5 SHEET NO. 2

13-70

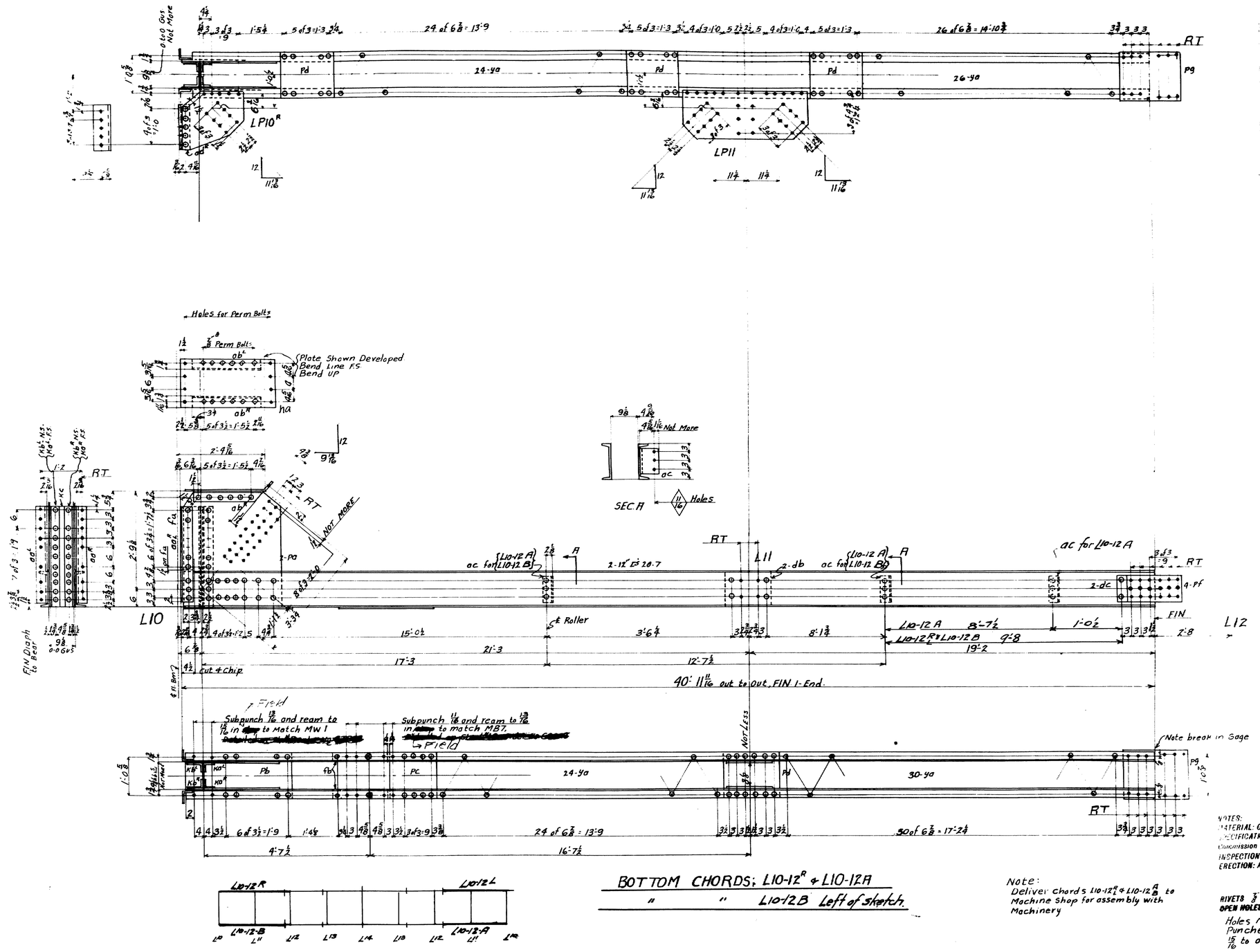

BOTTOM CHORDS: L10-12R & L10-12A
" " L10-12B Left of sketch.

Note:
Deliver Chords L10-12R/L & L10-12A/B to Machine Shop for assembly with Machinery

4-BOTTOM-CHORDS: 1-L10-12R, 1-L10-12L, 1-L10-12A, 1-L10-12B

8	12	L's	20.7	40	11		FIN 1-End 8-40-11½	29
8	Pls		34 ½	3	2½	Pa	1-25-9	70
8	L's	4	3 ⅜	2	10⅝	4-KaR 4-KaL	FIN 1-End	S
8	L's	5	3 ⅜	2	10⅝	4-KbR 4-KbL	FIN 1-End	S
4	Pls		7½ ½	2	10⅝	KC	FIN 1-End	S
8	Fills		4 ¼	1	10¼	fa		S
8	L's	4	3½ ⅜	2	9⅝	4-aaR 4-aaL		S
4	Pls		16 ⅜	2	6¼	ha	Bent	S
8	L's	3½	3½ 7/16	1	10¾	4-abR 4-abL		S
4	Pls		16 ½	3	0	Pb		S
4	Pls		16 ½	1	3	Pc		S
16	Pls		18 5/16	1	3⅛	Pd		S
8	Pls		12 ½	1	2½	db		S
16	Pls		9 5/16	1	6	Pf		S
8	Pls		9 ¼	1	0	dc		S
8	Pls		16 5/16	1	9	Pg		S
4	L6 Bars		2½ ⅜	1	2⅜	Ya	C.C. Holes 3-L10-12A 2-L10-12B 6x3½-⅜	S
5	L's	5⅜	3½ ⅜		9	ac		S
48	Perm Bolts		⅞ x 1¾				Hex. H & N.	S
8	Fills		3 ½	1	6	fb		S

4-LAT. PLATES: 2-LP10R, 2-LP10L

4	Pls		21 ⅜	1	10½	S
4	L's	4	3½ ⅜	1	3 2-adR 2-adL	S

4-LAT. PLATES - LP11

4	Pls		18 ⅜	3	6	S

NOTES:
MATERIAL: O. H. Steel Card 855
SPECIFICATIONS: Maine State Highway Commission
INSPECTION: P. T. L.
ERECTION: A. B. Co.

RIVETS ⅞"
OPEN HOLES: 15/16" unless Noted
Holes Marked RT to be Punched 11/16" and reamed to 15/16 to a metal templet.

State of Maine
Maine Kennebec Bridge
over Kennebec River
between
Richmond & Dresden

AMERICAN BRIDGE CO.
AMBRIDGE PLANT
Dwgs. made at Ambridge No. 3 in charge of Nichols
Detailed by T.H. Date 11-13-30 Checked by W.M. Date
Fld. conn. chk. by Date
ORDER NO. G3822-S SHEET NO. 3

13-71

AMERICAN BRIDGE COMPANY

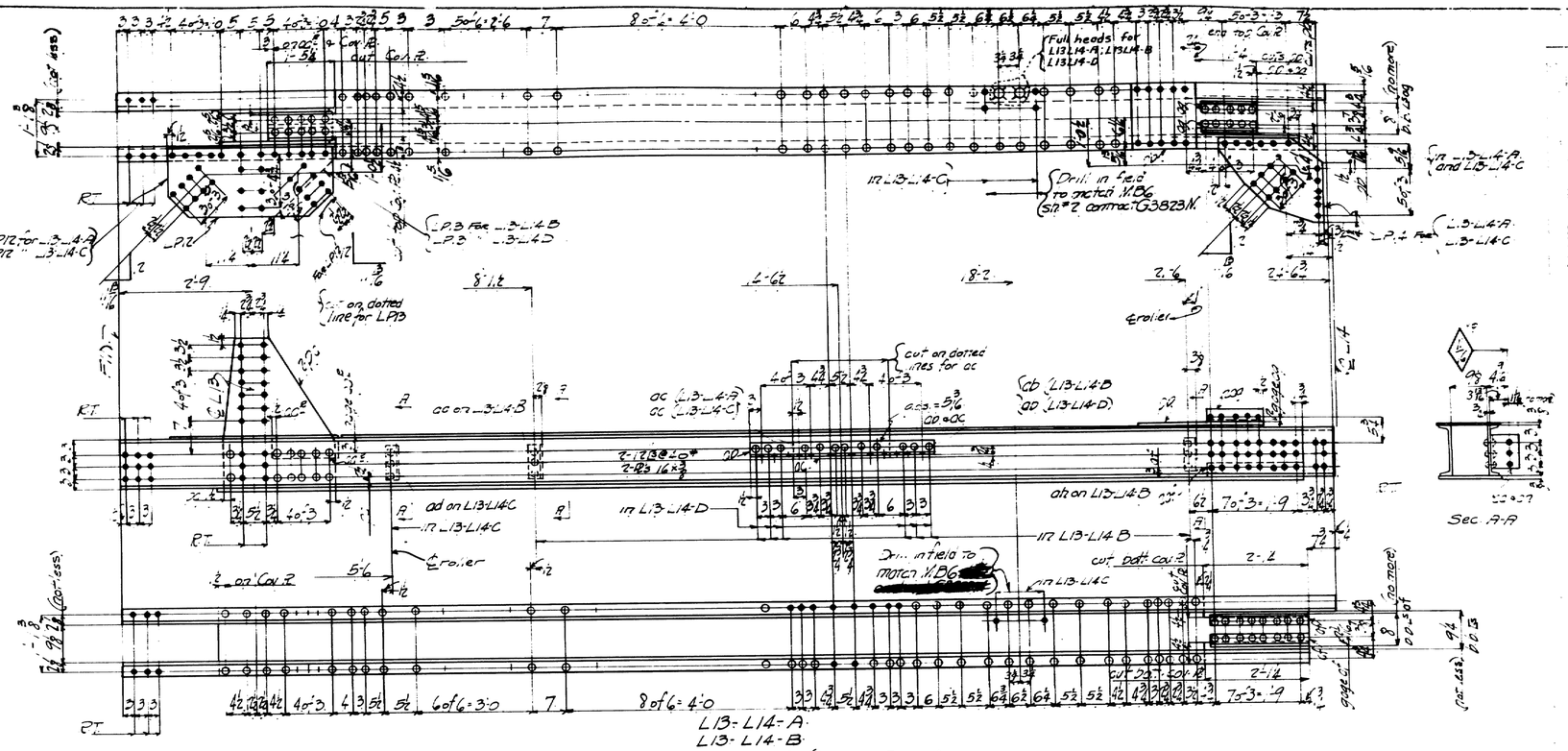

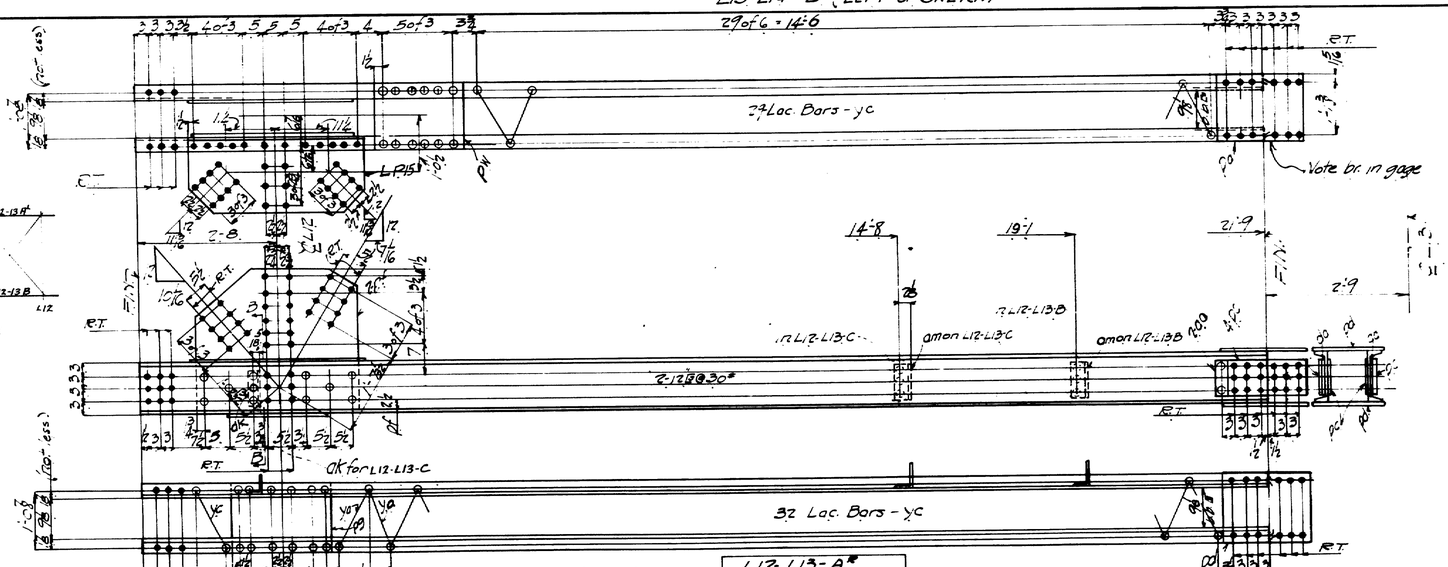

LOCATION DIAGRAM.

4- Bott Chords { ONE L13-L14-A, L13-L14-B, L13-L14-C, L13-L14-D

4	12 PLs	@ 40°	1	4	0	1/2	FIN. ONE END	24-7 1/2 25
4	12 PLs	@ 40°	1	3	0	1/2	" " "	4 23-1 1/2 26
4	Cov. PLs		1	6	3/8	9	5/8	4-19-8 1/2 56
4	Cov. PLs		1	6	3/8	2	0 1/2	4-21-10 1/2 85
8	PLs		1	3	0			4 24-1 74
3	L 5 x 3 1/2		3		4	8	400	S
1	L 7 x 4		2		3	9	400	S FOR L13-L14-B
							00	FOR L13-L14-A } CUT 0-6 S
1	L 7 x 4		2		2	0	00	FOR L13-L14-D
							00	FOR L13-L14-C S
8	L 3 x 3 1/2		3			3	00	S
4	PLs		1	6	3/8	2	7 1/2	00 S
8	L 3 x 3 1/2		3			2	0 2	00 (CUT 22 1/2°) S
2	L 3 x 3 1/2		3				00	L13-L14-B, L13-L14-C (CUT 5°-3 1/2") S
1	L 6 x 4		3				00	L13-L14-D (CUT 8°-6") S
28	T B		8					

4- Bott Chords { ONE L12-L13-A, L12-L13-B, L12-L13-C, L12-L13-A

8	L 3 x 3 1/2	@ 30°	2		0			
4	PLs		1	6	3/8	2	7 1/2	FIN. ENDS 8 21-9 1/2 27
4	PLs		1	5	3/8	1	4	4 21-9 69
8	PLs		1	5	3/8		4	00 S
8	PLs		1	5	3/8	1	0	00 S FIN. ONE END
16	PLs		1	5	3/8		6	00 S
5	PLs		1	6	3/8		9	00 S
1	L 5 x 3 1/2		1	5	3/8		9	QK for L13-L14-C (CUT 7 1/2°) S
2	L 5 x 3 1/2		1	5	3/8		9	QM for L12-L13-C (CUT 7 1/2°) S
5	Loc. Bars		2	2	3/8		2	YC CHG NOTES S
248	Loc. Bars		2	2	3/8		2	YC CHG NOTES S
32	T B		8					S
4	PLs		1	6	3/8		6	LW S

10- Lateral Plates { 4- LP15, 2- LP12, 2- LP3, 2- LP4

2	PLs	12	3/8	3	6	LP12 1 28-1 78
2	PLs	12	3/8	3	6	LP3 28-1 78
2	PLs	7	3/8	2	1/2	LP4 S
4	PLs	12	3/8	3	6	LP15 28-1 78

NOTES:
MATERIAL: O. H. Steel Card 855
SPECIFICATIONS: Maine State Highway Commission
INSPECTION: P. T. L.
ERECTION: A. B. Co.

RIVETS 3/4" ø
OPEN HOLES 13/16" ø unless noted
HOLES MARKED R.T. TO BE PUNCHED 11/16" AND REAMED TO 13/16" ø IN METAL TEMPLET

State of Maine
Maine Kennebec Bridge
over Kennebec River
between
Richmond & Dresden

AMERICAN BRIDGE CO.
AMBRIDGE PLANT

Dwgs. made at Ambridge No. 3 in charge of Nichols
Detailed by [illegible] Date 11/20 30 Checked by TH Date 12/30/30
Fin. comp. chkd. by [illegible] Date
ORDER NO. G3822-S SHEET NO. 4

13-72

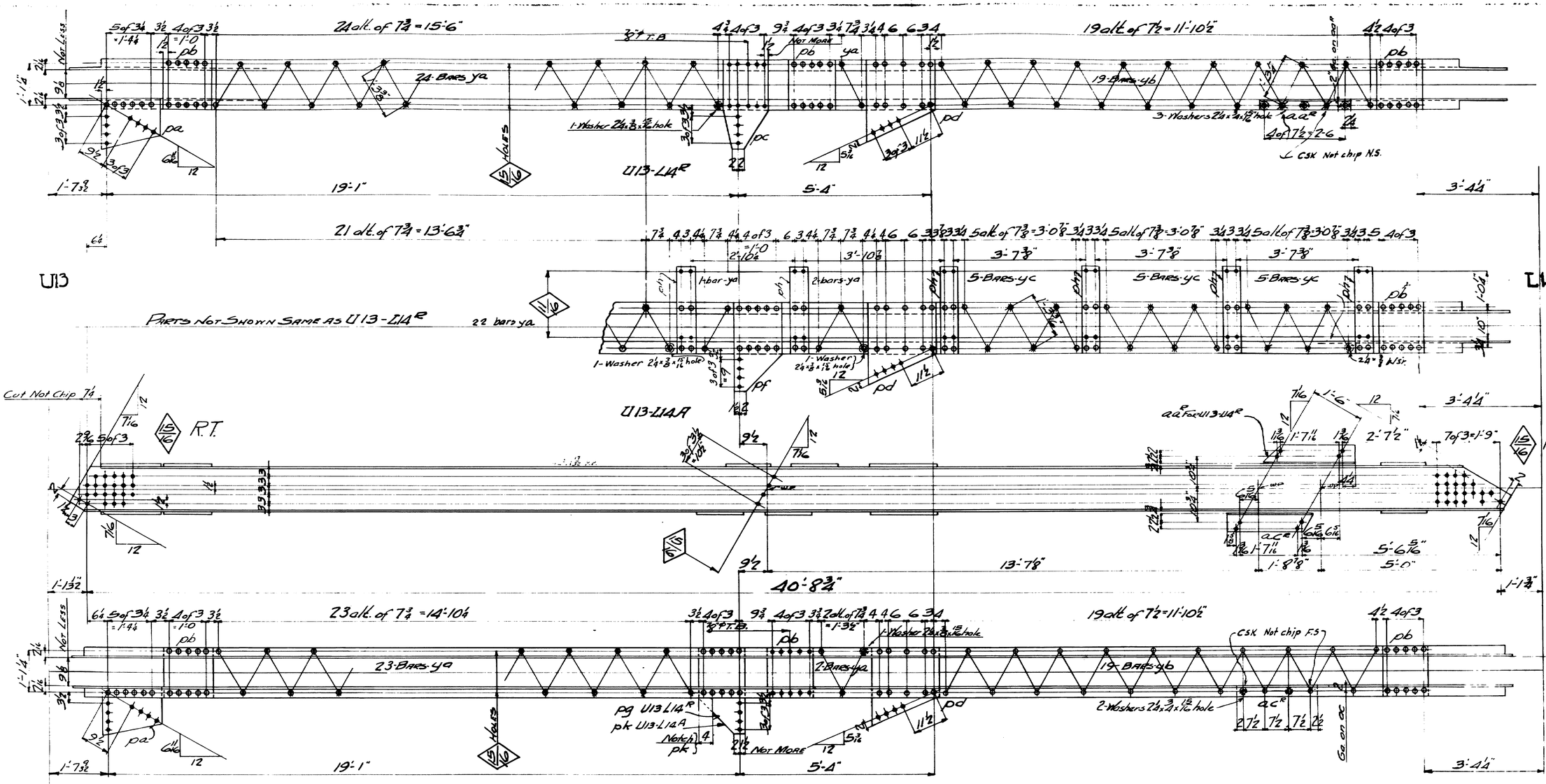

4-DIAGONALS
ONE (U13-L14R) TWO (U13-L14L)
ONE (U13-L14A)

8	15" L's	40#	41	5½			8-41-6½	24
200	50 Bars	2½	⅜	1	3⅜	ya	C.C.	5
153	19 Bars	2½	⅜	1	3¼	yb	C.C.	5
	15 Bars	2½	⅜	1	3 3/16	yc	C.C.	5
8	PL	19	5/16	1	4	pa		5
23	PL	15	5/16	1	4¼	pb	5 for U13-L14A, 10 for U13-L14R	2-30'-1 87
3	PL	15	5/16	2	4¾	pc	U13-L14R	87
8	PL	22	5/16	2	1	pd		1-16'-9 77
1	PL	15	5/16	2	4¾	pf	For U13-L14A	30'-1 87

3	PL	15	5/16	2	4¾	pg	2-U13-L14L, 1-U13-L14R	30'-1 87
6	PL	6	¾	2	4	ph	for U13-L14A	5
1	L	6	3½	⅜	2	9¾	aa^R for U13-L14R	5
2	L						aa^L for U13-L14L	5
1	PL	15	5/16	2	4¾	pk	U13-L14A	30'-1 87
2	L	6	3½	⅜	2	3	ac^R	5
2	L						ac^L	5
19	Washers	2¼ x ¾ x 15/16 hole						5
10	Washers	2¼ x ⅜ x 15/16 hole						5
14	T.B.	⅞						5

150	Bars	ya	U13-L14L
114	Bars	yb	

3-Diagonals U13-L14L

1- " U13-L14A

NOTES:
MATERIAL: O. H. Steel Card 855
SPECIFICATIONS: Maine State Highway Commission
INSPECTION: P. T. L.
ERECTION: A. B. Co.

RIVETS ⅞" ϕ
OPEN HOLES 13/16" ϕ UNLESS NOTED

Holes marked R.T. to be punched 11/16 ϕ and reamed to 15/16 ϕ to a metal Templet

State of Maine
Maine Kennebec Bridge
over Kennebec River
between
Richmond & Dresden

AMERICAN BRIDGE CO.
AMBRIDGE PLANT
Dwgs. made at Ambridge No. 3 in charge of Nichols
Detailed by H.A.J. Date 11/18/30 Checked by W.M. Date 12/9/30
Fld. conn. chk. by T.H. Date 12-22-30
ORDER NO. G3822-S SHEET NO. 5

13-73

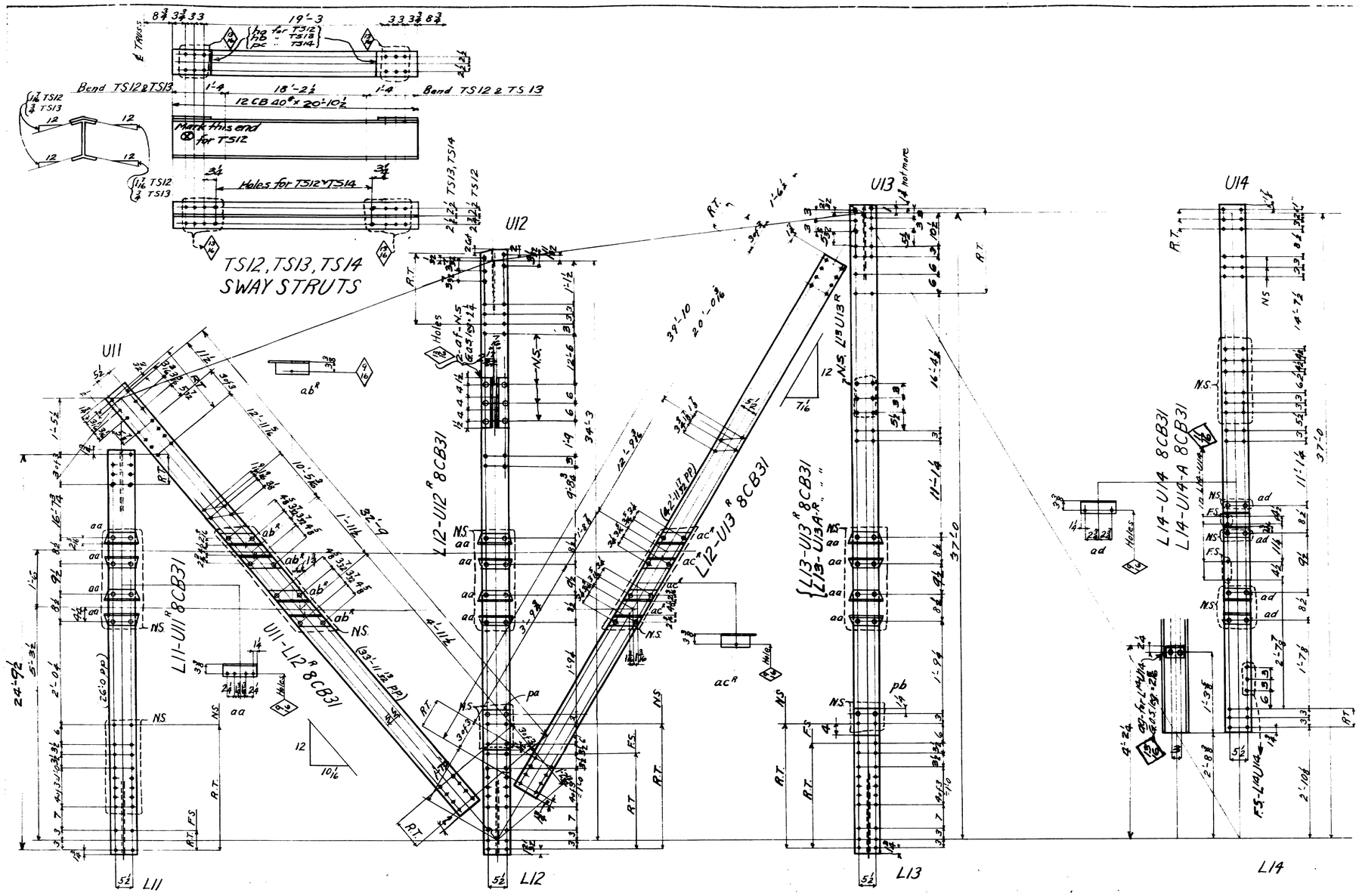

AMERICAN BRIDGE COMPANY

4-POSTS							
4	8 CB31	25	1		2-L11-U11R / 2-L11-U11L	25'-1	19
16	Ls 4 3½ 5/16		10½	aa		3-30'-1	47
4-POSTS							
4	8 CB31	34	11		2-L12-U12R / 2-L12-U12L	34'-11	16
4	Rs 8 ½	1	0	pa			5
16	Ls 4 3½ 5/16		10½	aa			
8	Ls 4 3½ 5/16	1	3	af			5
4-POSTS							
4	8 CB31	37	7½		1-L13-U13R, 1-L13-U13AR / 1-L13-U13L, 1-L13-U13AL	37'-7½	15
4	Rs 8 ½		8¼	pb			5
16	Ls 4 3½ 5/16		10½	aa			
2-POSTS							
1	8 CB31	34	6½		L14-U14	34'-6½	17
4	Ls 4 3½ 5/16		8	ad			47
1	L 4 4 3/8		5½	af			5
1	8 CB31	34	6½		L14-U14-A	34'-6½	17
4	Ls 4 3½ 5/16		8	ad			
4-DIAG.							
4	8 CB31	33	1		2-U11-L12R / 2-U11-L12L	33'-1	18
16	Ls 4 3½ 5/16	1	1 3/8	8 ab R / 8 ab L			47
4-DIAG.							
4	8 CB31	40	1½		2-L12-U13R / 2-L12-U13L	40'-1½	14
16	Ls 4 3½ 5/16		11 3/8	8 ac R / 8 ac L			47
5-SWAY STRUTS							
2	12 CB40	20	10½		TS12 (Flared) bent	20'-10½	7
4	Rs 8 3/8		11¼	ha			5
2	12 CB40	20	10½		TS13 (Flared) bent	20'-10½	7
4	Rs 8 3/8		11¼	hb			5
1	12 CB40	20	10½		TS14	20'-10½	7
2	Rs 8 3/8		11¼	pc			5

NOTES:
MATERIAL: O. H. Steel Card 865
SPECIFICATIONS: Maine State Highway Commission
INSPECTION: P. T. L.
ERECTION: A. B. Co.

RIVETS 7/8
OPEN HOLES 15/16 (Unless Noted)

Reaming Note.- Holes marked R.T. to be punched 1/16 ϕ and reamed to 15/16 ϕ to a metal templet.

State of Maine
Maine Kennebec Bridge
over Kennebec River
between
Richmond & Dresden

AMERICAN BRIDGE CO.
AMBRIDGE PLANT
Dwgs. made at Ambridge No. 3 in charge of Nichols
Detailed by JLM Date 11/18/30 Checked by WLM Date 12/9/30
Fla. conn. chk. by TH Date 12-23-30
ORDER NO. G3822 SHEET NO. 6

13-74

0 1 2 3 4 5 INCHES

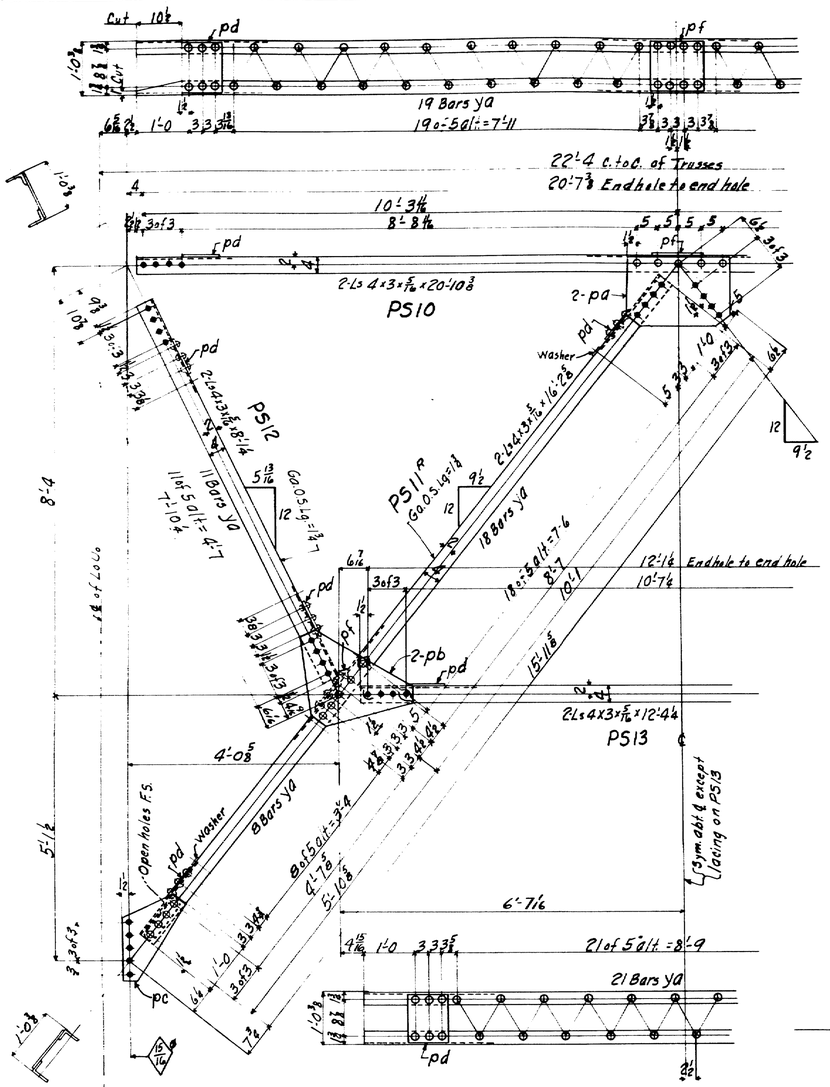

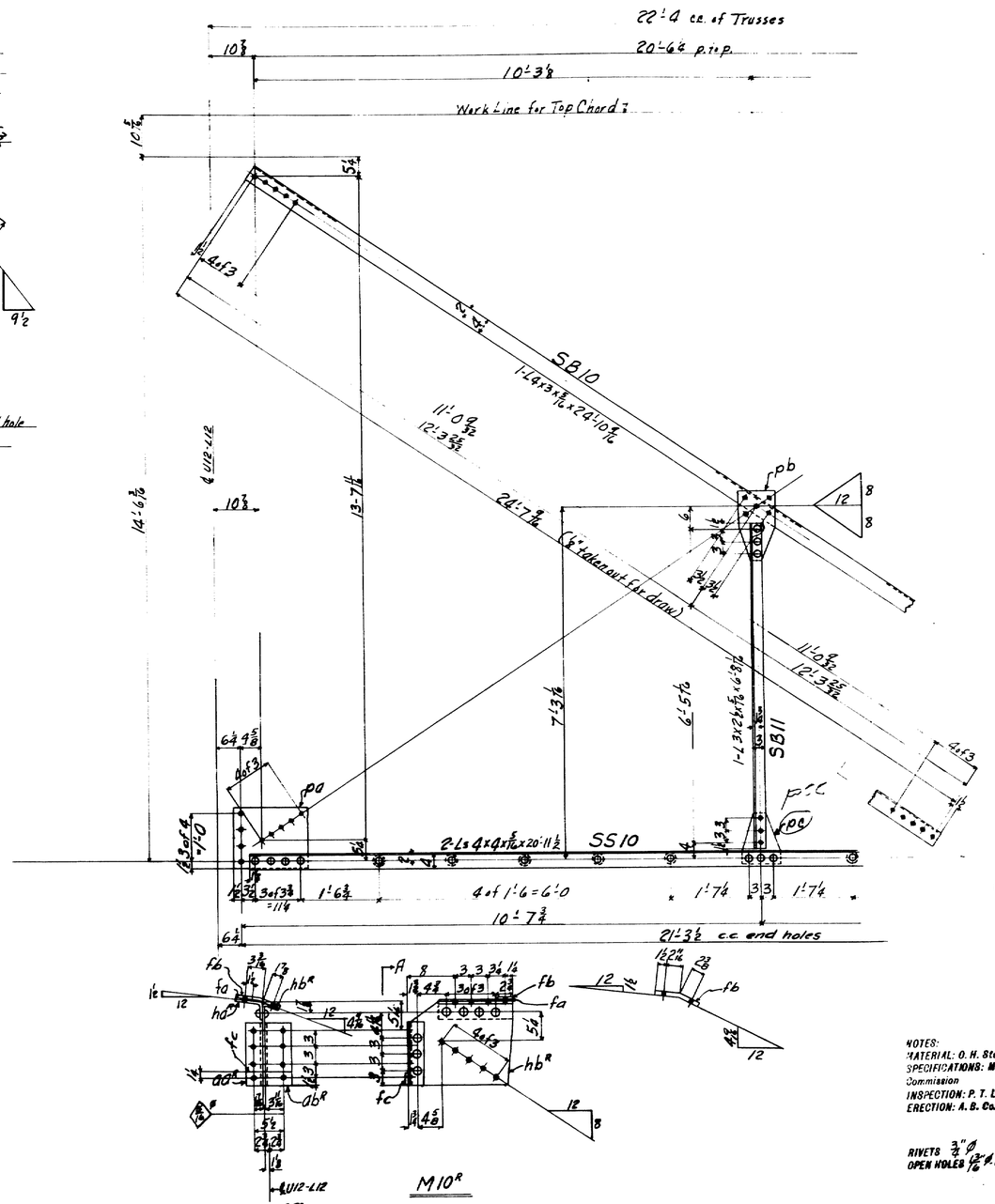

2 Portal Struts PS10

4	Ls	4	3	5/16	20	10¾		12-20-10¾ 57
8	4	Pls		16	3/8	1 11	pa	S
24	4	Pl		9	5/16	11½	pd	S
6	2	Pls		12	5/16	11½	pf	S
240	76	Bars		24	3/8	10⅛	ya	S

4 Portal Struts 2-PS11R 2-PS11L

8	Ls	4	3	5/16	16	2⅝		8-16-2¾ 60
8	Pls			18	3/8	2 6½	pb	S
4	Pls			15	3/8	2 8½	pc	S
8	Pls			9	5/16	11½	pd	//
4	Pls			12	5/16	11½	pf	//
104	Bars			24	3/8	10¼	ya	//
8	⊙	2⅛ x ⅜ x 5/16				Hole		S

4 Portal Struts PS12

8	Ls	4	3	5/16	8	1 4		2-32-6 49
8	Pls			9	5/16	11½	pd	//
44	Bars			24	3/8	10⅛	ya	//

2 Portal Struts PS13

4	Ls	4	3	5/16	12	4 4		2-24-8½ 52
4	Pls			9	5/16	11½	pd	//
42	Bars			24	3/8	10⅛	ya	//

4 Diagonals SB10

4	Ls	4	3	5/16	24	10⅝		4-24-10¾ 51

2 Vert. Struts SB11

2	Ls	3	2½	5/16	6	8⅛		S
2	Pls			9	5/16	1 5	pb	S

2 Struts SS10

4	Ls	4	4	5/16	20	11½		4-21-3½ 45
4	Pls			18	5/16	1 3	pa	S
2	Pls.			9	5/16	1 1	pc	S
20	⊙	2⅛ x 5/16 x 13/16				Hole		S

2 Pieces M10R
2 Pieces M10L

2	Pls	18	5/16	1	7	hb R	Bent	S
2	Pls					hb L		S
4	Ls	5	3	5/16	1	1	2-ha R, 2-ha L	S
4	Ls	5	3	5/16	1	0	2-gb R, 2-gb L	S
4	Ls	3	3	5/16	1	0	2-gb R, 2-gb L	S
4	Fills	3		1/16	1	1	fa	S
8	TB	7/8 ⌀						S
4	Fills	2½	3/8			8½	fb Bent	S
4	Fills	2¾	½			8½	fc	S

NOTES:
MATERIAL: O. H. Steel Card 855
SPECIFICATIONS: Maine State Highway Commission
INSPECTION: P. T. L.
ERECTION: A. B. Co.

RIVETS ¾" ⌀
OPEN HOLES 1 3/16" ⌀ unless noted

State of Maine
Maine Kennebec Bridge
over Kennebec River
between
Richmond & Dresden

AMERICAN BRIDGE CO.
AMBRIDGE PLANT
Dwgs. made at Ambridge No. 3 in charge of Nichols
Detailed by R.D.R. Date 11/13/30 Checked by ... Date ...
Fld. conn. dtls. by T.H. Date 12-23-30
ORDER NO. G3822-S SHEET NO. 7

13-73

0 1 2 3 4 5 INCHES

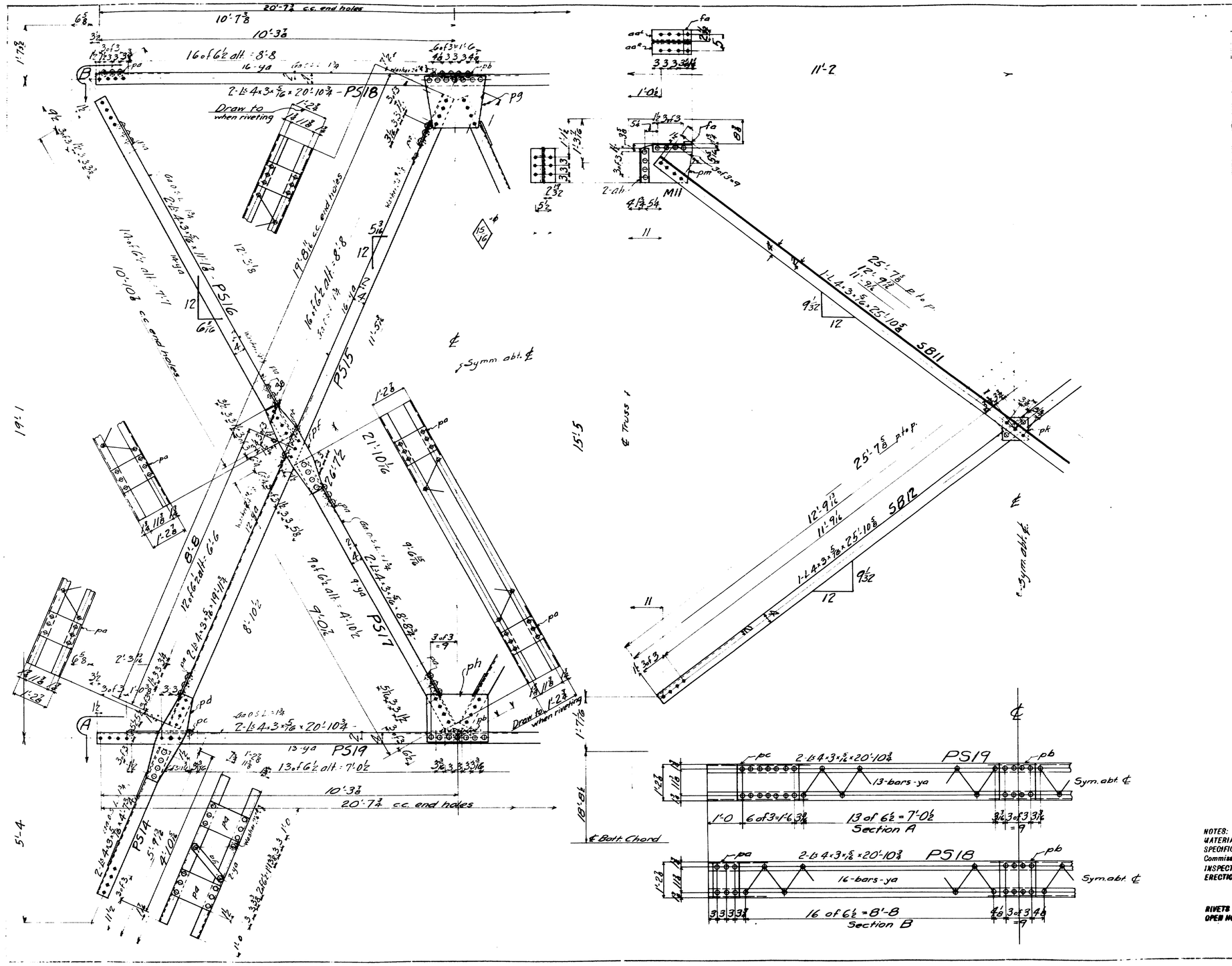

AMERICAN BRIDGE COMPANY

	4-PORTAL STRUTS - PS14						
	8 Ls	4	3	5/16	4	7¾	S
	8 Pls.	8	3/8	2	8	pd	S
36	8 Pls.	9	5/16	1	2½	pa	S
328	8 Bars	2¼	3/8	1	1½	ya	S
	4 Washers	2¼"φ × 3/8			13/16"φ holes ⊙		S
	4-PORTAL STRUTS PS15						
	8 Ls	4	3	5/16	19	11¾	8-19'-11¾ 59
8	4 Pls.	12	5/16	1	2½	pb	S
	8 Pls.					pa	/
	112 Bars					ya	/
	8 Washers	2¼"φ × 3/8			13/16"φ holes ⊙		S
	4-PORTAL STRUTS PS16						
	8 Ls	4	3	5/16	11	1⅞	4-22'-4 54
	8 Pls.					pa	/
	56 Bars					ya	/
	4 Washers	2¼"φ × 3/8			13/16"φ holes ⊙		S
	4-PORTAL STRUTS PS17						
	8 Ls	4	3	5/16	8	8¾	2-35'-0 48
	8 Pls.	8	3/8	2	11	pf	S
	8 Pls.					pa	/
	36 Bars					ya	/
	2-PORTAL STRUTS - PS18						
	4 Ls	4	3	5/16	20	10¾	20'-10¾ 57
	4 Pls.					pa	/
	2 Pls.					pb	/
	4 Pls.	18	5/16	1	10	pg	S
	64 Bars					ya	/
	4 Washers	2¼"φ × 3/8			13/16"φ holes ⊙		S
	2 PORTAL STRUTS - PS19						
	4 Ls	4	3	5/16	20	10¾	20'-10¾ 57
	4 Pls.	21	5/16	1	2½	pc	S
	2 Pls.					pb	/
	2 Pls.	21	5/16	1	4½	ph	S
	52 Bars					ya	/
	ONE DIAGONAL - SB11						
	1 L	4	3	5/16	25	10⅝	2-25'-10¾ 50
	ONE DIAGONAL - SB12						
	1 L	4	3	5/16	25	10⅝	25'-10¾ 50
	1 Pl.	8	5/16		9	pk	S
	2-BRACKETS - M11						
	2 Pls.	14	5/16	1	6½	pm	S
	4 Ls	4	3	5/16	1	1½	2-aaR 2-aaL S
	4 Ls	4	3	5/16	1	0	ab S
	2 Fills	2½	3/8		8⅜	fa	S

NOTES:
MATERIAL: O. H. Steel Card 855
SPECIFICATIONS: Maine State Highway Commission
INSPECTION: P. T. L.
ERECTION: A. B. Co.

RIVETS 3/4"φ
OPEN HOLES 13/16"φ Unless noted.

State of Maine
Maine Kennebec Bridge
over Kennebec River
between
Richmond & Dresden

AMERICAN BRIDGE CO.
AMBRIDGE PLANT
Dwgs. made at Ambridge No. 3 in charge of Nichols
Detailed by G.M. Date 11/18/30 Checked by J.K. Date 9/
Fld. conn. chk. by T.H. Date 12-23-30
ORDER NO. G3822-5 SHEET NO. 8

13-76

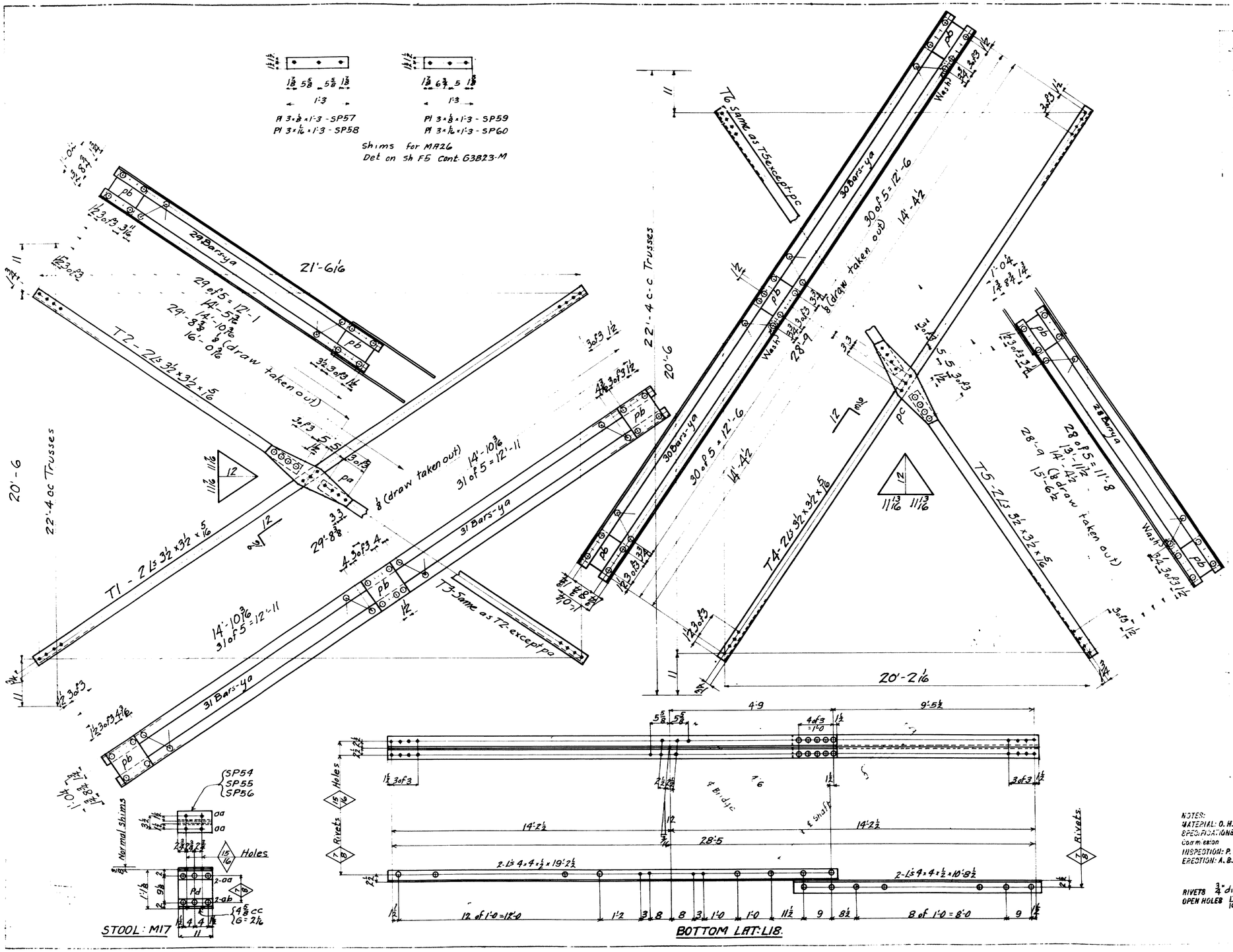

2 Top Laterals T1

4	Ls	3½	3½	5/16	29	11 3/8		4-29'-11½	61
42	6 Pls		12	5/16	1	0	pb		S
704	124 Bars		2½	3/8	0	10 1/16	c/c ya		S

2 Top Laterals T2

4	Ls	3½	3½	5/16	14	8 3/16		4-29'-4½	62
4	Pls						pb		/
4	Pls		9	3/8	2	7	pa		S
58	Bars						ya		/

2 Top Laterals T3

4	Ls	3½	3½	5/16	14	8 3/16		29'-4½	62
4	Pls						pb		/
58	Bars						ya.		/

4 Top Laterals T4

8	Ls	3½	3½	5/16	29	0		8-29'-0	63
12	Pls						pb		/
240	Bars						ya		/
8	Wash		2½	5/16	⊙	13/16"φ	holes		S

4 Top Laterals T5

8	Ls	3½	3½	5/16	14	2½		8-28'-5	64
8	Pls						pb		/
8	Pls		9	3/8	2	7	pc		S
112	Bars						ya		/

4 Top Laterals T6

8	Ls	3½	3½	5/16	14	2½		28'-5	64
8	Pls						pb		/
112	Bars						ya		/

ONE BOTTOM LAT. L18

2	Ls	4	4	½	19	2½		28'-8	40
2	Ls	4	4	½	10	8½			S

4 - STOOLS M17

4	Pls		11	½	1	0	Pd		S
8	Ls	3½	3	3/8		11	aa		S
8	Ls	3½	3½	3/8		11	ab		S

SHIMS

8	Pls		6½	¼		11		8-SP54	S
8	Pls		6½	⅛		11		8-SP55	S
4	Pls		6½	1/16		11		4-SP56	S
3	Pls		3	⅛	1	3		3-SP57	S
1	Pl		3	1/16	1	3		1-SP58	S
3	Pls		3	⅛	1	3		3-SP59	S
1	Pl		3	1/16	1	3		1-SP60	S

NOTES:
MATERIAL: O. H. Steel Card 855
SPECIFICATIONS: Maine State Highway Commission
INSPECTION: P. T. L.
ERECTION: A. B. Co.

RIVETS ¾" dia unless Noted
OPEN HOLES 13/16" dia. unless Noted

State of Maine
Maine Kennebec Bridge
over Kennebec River
between
Richmond & Dresden

AMERICAN BRIDGE CO.
AMBRIDGE PLANT
Dwgs. made at Ambridge No. 3 in charge of Nichols
Detailed by [illegible] Date 11-10-30 Checked by W. M. Date 12-19-30
Fld. conn. chk. by T.H. Date 12-23-30
ORDER NO. G3822-S SHEET NO. 9

13-77

Center Cross Girder CG1

Plates M13(NS) M14(FS)
Diaphragm D10

NOTE: Deliver CG1 to machine shop for assembly with machinery

One Center Cross Girder CG1

1. Web 50 ½ 21 6⅞	Fin 2 Ends	1-50½x½x 21-7¾	66
4. Ls 6 6 ¾ 21 6⅞	do.	21-7¾	36
2. Cov. Pls. 16 ⅝ 21 6⅞	do.	21-7¾	80
2. Cov Pls 16 ⅝ 11 3½		1-22-7	79
4 Ls 6 6 ½ 4 1⅜ 2-sa^R 2-sa^L			S
8 Ls 5 3½ ½ 4 1⅜ 4-sb^R 4-sb^L	FIN. 1 END		S
4 Ls 5 3½ ½ 4 1⅜ 2-sc^R 2-sc^L			S
4 Ls 5 3½ ⅞ 4 1⅜ 2-sd^R 2-sd^L	FIN. 1 END		S
4 Pls. 38½ ¾ 3 0 3/16 pa	Fin 1 End	1-12-5	67
2 Ls 4 4 ⅜ 1 6 5/16 aa^R_L			S
2 Ls 4 4 ⅜ 1 3 ab^R_L			S
1 L 4 4 ⅜ 8 ac			S
4 Ls 3½ 3 ⅜ 1 6 5/16 2-ad^R 2-ad^L			S ⊗
4 Fills 7¼ ¾ 1 1¾ da			S
4 Fills 3½ ¾ 10¾ fa			S
6 Ls 5 3½ ⅜ 8 af			S ⊗
4 Fills 12½ ¾ 1 4½ db			S
4 Fills 3½ ¾ 1 9 7/16 fb			S
2 Pls. 38½ ¾ 1 9¾ pb			S
2 Fills 4 ¾ 11¾ fc			S
2 Pls. 17½ ⅜ 2 2½ pc			S
1 Pl. 17½ ⅜ 4 11 pd			S
2 Ls 4 3½ ⅜ 1 0½ ag			S

2 Plates M13

2 Pls 64 ½ 5 0⅝	1-64½x½x 20-4	65

2 Plates M14

2 Pls 64 ½ 5 0⅝		65

2 Diaphragms D10

8 Ls 4 3 ⅜ 4 1 4-ah^R 4-ah^L	S
2 Pls 7½ ½ 4 1 pf	S

Note:
Erection material marked ⊗ in Weight Col. not to be billed to Customer.

NOTES:
MATERIAL: O. H. Steel Card 855
SPECIFICATIONS: Maine State Highway Commission
INSPECTION: P. T. L.
ERECTION: A. B. Co.

RIVETS ⅞
OPEN HOLES 15/16 ⌀ UNLESS NOTED
Holes marked "RT" to be punched 11/16 and reamed to 15/16 ⌀ to a metal templet.

State of Maine
Maine Kennebec Bridge
over Kennebec River
between
Richmond & Dresden

AMERICAN BRIDGE CO.
AMBRIDGE PLANT
Dwgs. made at Ambridge No. 3 in charge of Nichols
Detailed by R.H. Date
Checked by T.H. Date 12-5-30
Fis. conn. chk. by
Date
ORDER NO. G3822-S SHEET NO. 10

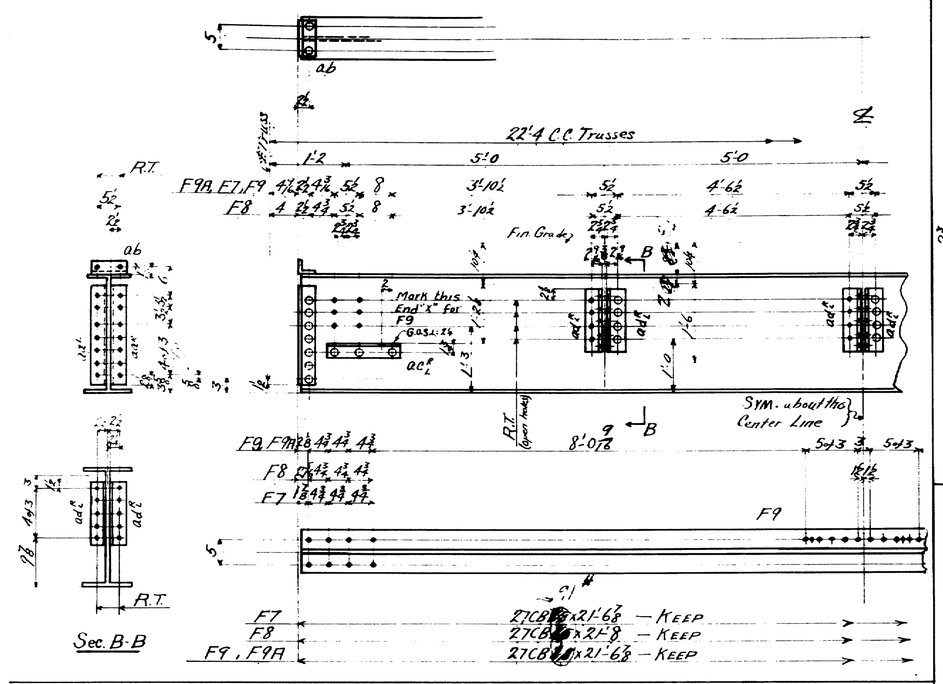

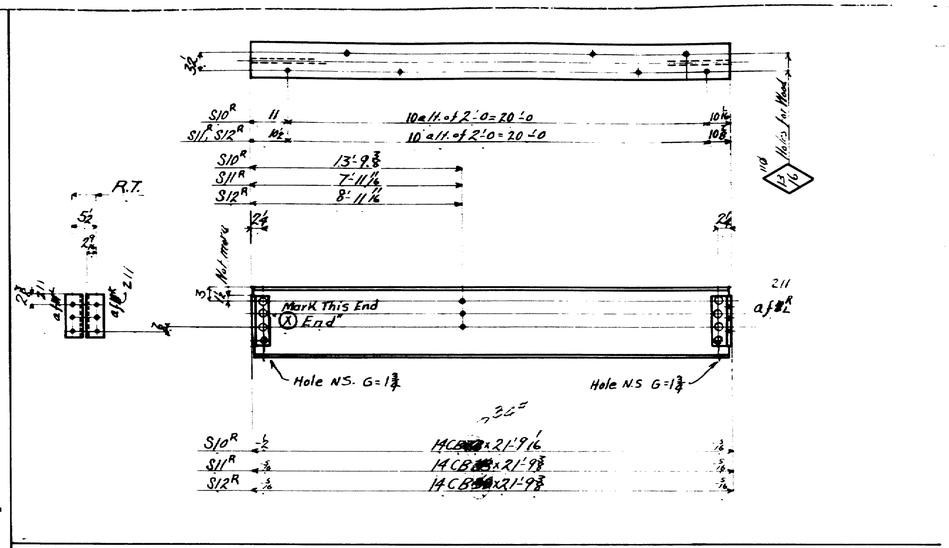

AMERICAN BRIDGE COMPANY

6 FLOOR BEAMS {1-F9A 2-F7 2-F8 1-F9

4	27CB85	21 6⅞		{1-F9A 2-F7 1-F9	21-6	2
2	27CB85	21 8		F8	21-7	1
12	Ls 4 4 7/16	1 10⅝	aa^R			S
12	Ls		aa^L			S
12	Ls 4 3½ ⅜	0 8½	ab			S
12	Ls 3½ 3½ ⅜	1 4½	ac^R			S ⊗
12	Ls		ac^L			S ⊗
36	Ls 4 3½ ⅜	1 3	ad^R			S
36	Ls		ad^L			S
36	T.B. ⅞"φ					S

3 STRINGERS 1-S18, 1-S19, 1-S20

3	18CB47	21 8⅛		21-8	9
2	Ls 4 3 ⅜	6	ag	for S18, S19	S
4	Ls 4 4 ⅜	1 2½			S

12 STRINGERS: 2-S10^R: 2-S10^L: 2-S11^R: 2-S11^L 2-S12^R: 2-S12^L

4	14CB33	21 9 1/16		S10^R_L	21-8	12
8	14CB33	21 9⅝		S11^R_L S12^R_L	21-8½	11
28	24 Ls 4 3½ ⅜	11¾	af11^R			S
28	24 Ls		af11^L			S

15 STRINGERS {2-S14 1-S15 8-S16, 4-S17

3	18CB47	21 8⅛	2-S14, 1-S15	21-8	9
12	18CB47	21 8½	8-S16, 4-S17	21-8½	8

Note - Erect Material marked ⊗ in Weight Col. is not to be billed to Customer.

NOTES:
MATERIAL: O. H. Steel Card 855
SPECIFICATIONS: Maine State Highway Commission
INSPECTION: P. T. L.
ERECTION: A. B. Co.

RIVETS ⅞
OPEN HOLES 15/16

Reaming: Holes marked R.T. to be punched 13/16" and reamed to 15/16" thru a metal templet or with parts assembled

State of Maine
Maine Kennebec Bridge
over Kennebec River
between
Richmond & Dresden

AMERICAN BRIDGE CO.
AMBRIDGE PLANT
Dwgs. made at Ambridge No. 3 in charge of Nichols
Detailed by JWE Date 11-17-30 Checked by [illegible] Date [illegible]
Fin. conn. chk. by TH Date 12-23-30
ORDER NO. G3822-S SHEET NO. 11

47

0 1 2 3 4 5 INCHES

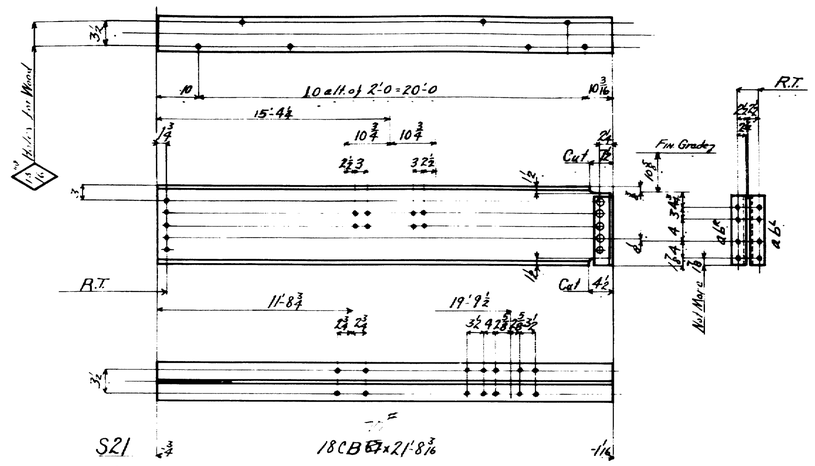

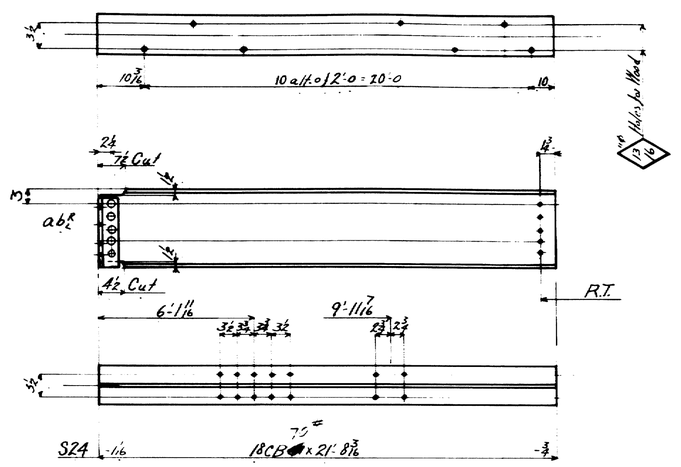

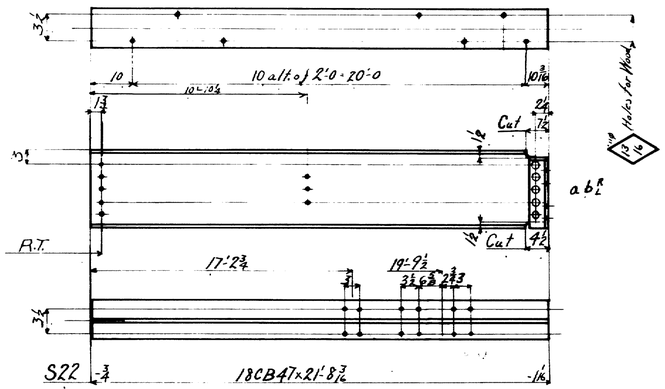

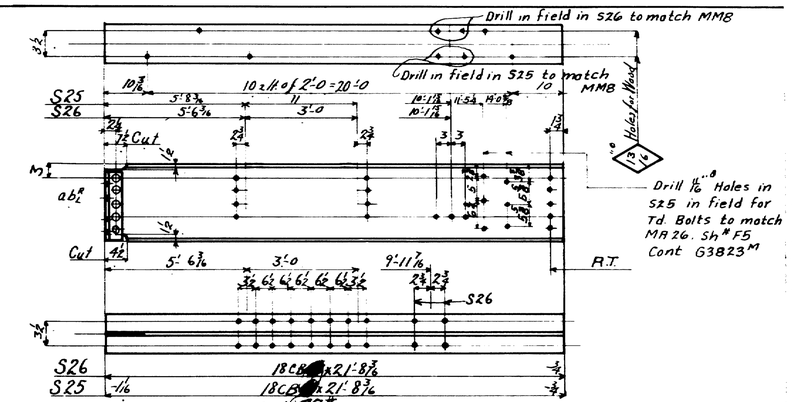

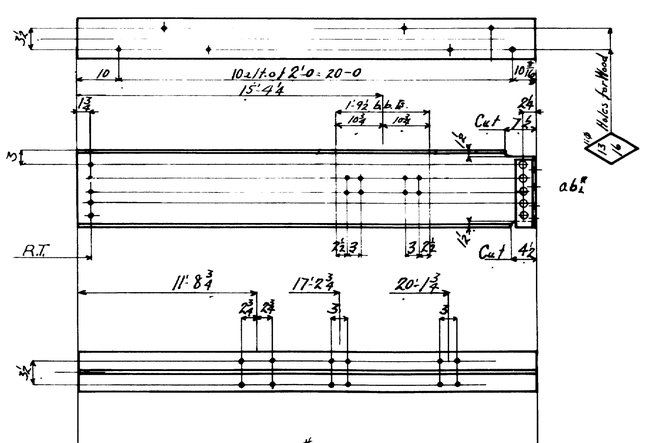

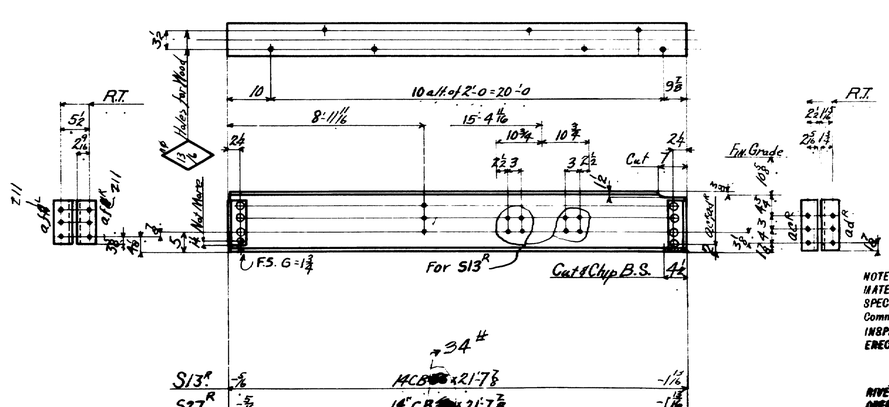

AMERICAN BRIDGE COMPANY

ONE STRINGER S21

1. 18CB 67 21. 8¾ 1-21'-7½ 4
2 Ls 4. 3½. 7/16. 1. 4½ abR 5

ONE STRINGER S22

1. 18CB. 47 21. 8¾ 1-21'-7½ 10
2. Ls abR /

ONE STRINGER S23

1 18CB 67 21. 8¾ 1-21'-7½ 4
2 Ls. abR /

ONE STRINGER S24

1. 18CB. 67 21. 8¾ 1-21'-7½ 4
2 Ls abR /

2 STRINGERS 1-S25. 1-S26

2. 18CB. 67 21 8¾ 2-21-7½ 4
4 Ls abR /

4 STRINGERS: 1-S13R, 1-S13L, 1-S27R, 1-S27L

4. 14 CB33. 21 7⅞ 4-21'. 7 13
4 Ls. 4. 3½ 3/8. 11¾. a S11R /
4 Ls. a S11L /
2 Ls 4. 3½. 7/16. / 0½ acK 5
2 Ls acL 5
2 Ls. 3½ 3. 7/16 / 0½ adK 5
2 Ls adL 5

NOTES:
MATERIAL: O. H. Steel Card 855
SPECIFICATIONS: Maine State Highway Commission
INSPECTION: F. T. L.
ERECTION: A. B. Co.

RIVETS ⅝
OPEN HOLES 15/16 unless Noted.
Reaming; Holes marked R.T. to be punched 1/16" and reamed to Size thru a metal template.

State of Maine
Maine Kennebec Bridge
over Kennebec River
between
Richmond & Dresden

AMERICAN BRIDGE CO.
AMBRIDGE PLANT
Engg. made at Ambridge No. 3 in charge of Nichols
Detailed by JWE Date 11/17/30 Checked by: Date
Fin. com. dtls. by TH Date 2-23-30
ORDER NO. G3822-S SHEET NO. 12

0 1 2 3 4 5 INCHES

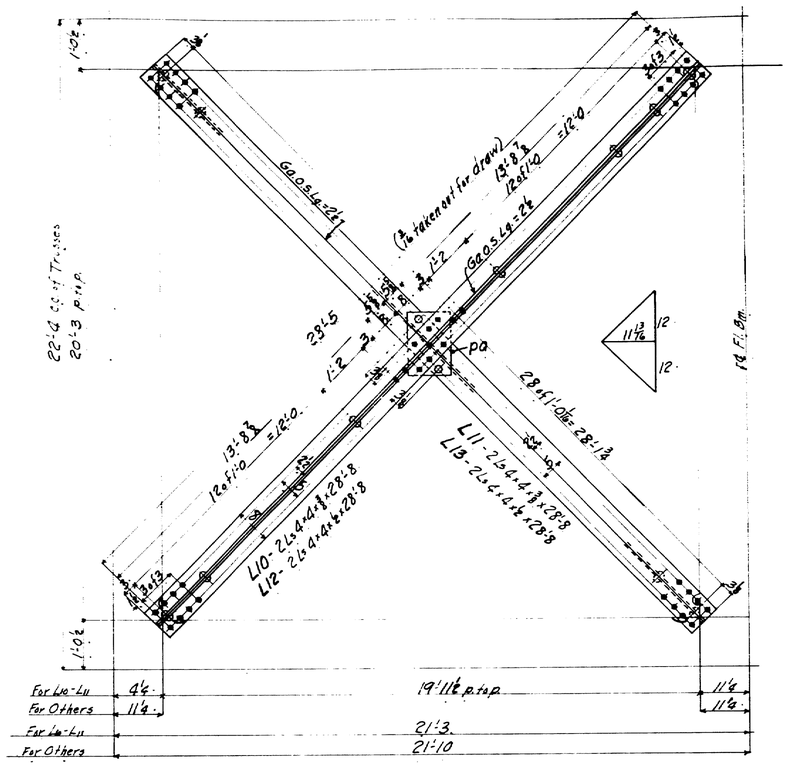

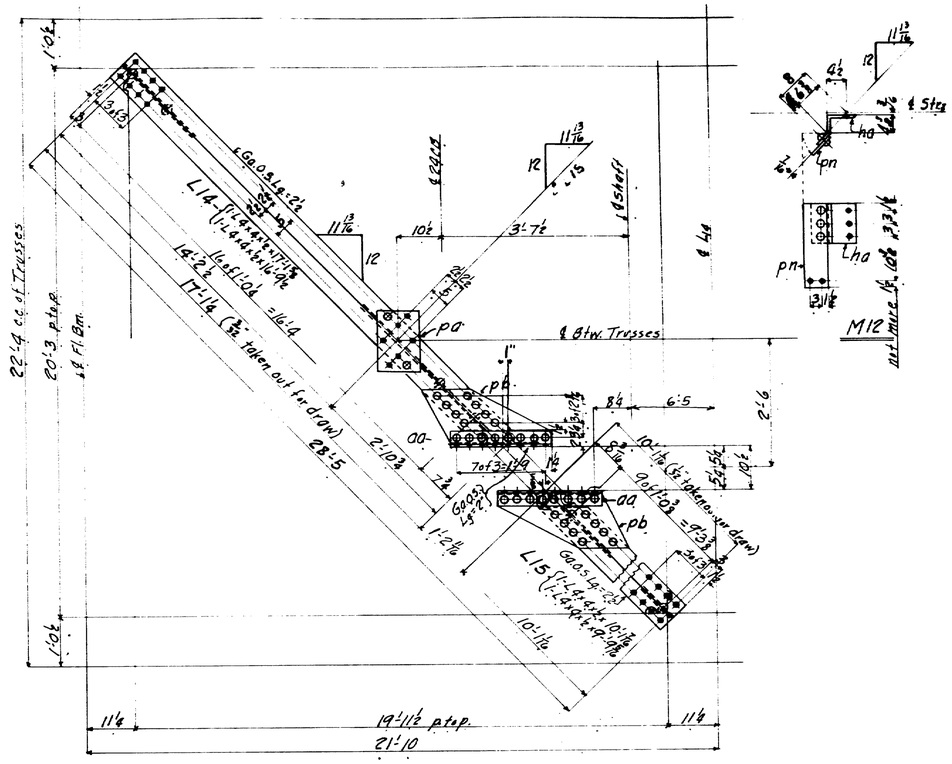

4 DIAGONALS L10

8 Ls 4 4 3/8 28 8		14	28-8 43

4 DIAGONALS L11

8 Ls 4 4 3/8 28 8			28-8 43
7 4 Pls 10 3/8 1 2 1/2 pa			5

2-DIAGONALS L12

4 Ls 4 4 1/2 28 8		10	28-8 40

2 DIAGONALS L13

4 Ls 4 4 1/2 28 8			28-8 40
2 Pls 10 3/8 1 2 1/2 pa			

ONE DIAGONAL L14

1 L 4 4 1/2 17 1 5/8			17-1 3/4 42
1 L 4 4 1/2 16 9 1/2			1-26-11 41
1 Pl 10 3/8 1 2 1/2 pa			
2 1 Pl 13 3/8 2 3 pb			5
2 1 L 3 1/2 3 1/2 3/8 1 11 1/2 qa			5

ONE DIAGONAL L15

1 L 4 4 1/2 10 1 7/16			26-11 41
1 L 4 4 1/2 9 9 7/16			5
1 Pl 13 3/8 2 3 pb			
1 L 3 1/2 3 1/2 3/8 1 11 1/2 qa			

14 HANGERS M12

14 Pls 6 3/8 1 7 3/8 pn			5
14 Ls 8 6 7/16 9 ha (Beam)			5

4 STRUTS M8-M12

8 Ls 4 3 5/16 11 7 7/16		4	23-3 1/2 53
8 Pls 6 3/8 1 8 3/8 pc			5
30 8 Pls 6 5/16 7 1/2 pd			5
444 108 Bars 2 1/4 6 1/2 ya	c.c.		5

4 STRUTS M12-M8

8 Ls 4 3 5/16 9 5 1/16			5
8 Pls 7 3/8 2 4 pf			5
8 Pls 6 5/16 7 1/2 pd			
84 Bars 2 1/4 6 1/2 ya	c.-c		

4 STRUTS M8-M13

8 Ls 4 3 5/16 10 3 1/16		4	20-8 58
8 Pls 6 3/8 2 9 pg			5
8 Pls 6 5/16 7 1/2 pd			
96 Bars 2 1/4 6 1/2 ya	c.-c.		5
4 0 2 1/4 x 5/16 1 1/2 hole 2 4 ph			5

ONE STRUT M14-M13 (1)
ONE STRUT M14-M13 (2)
ONE STRUT M13-M14

6 Ls 4 3 5/16 21 0 pk	For M14-M8 (1)	6	21-0 56
2 Pls 6 3/8 1 6 pm	For M14-M13 (2)		5
2 Pls 4 1/2 1 9 1/2 pq			5
6 Fills 4 1/2 1 9 1/2 pa			
156 Bars 2 1/4 5/16 6 7/16 ya	c.-c.		5
68 3 0 2 1/4 x 1/2 Hole			

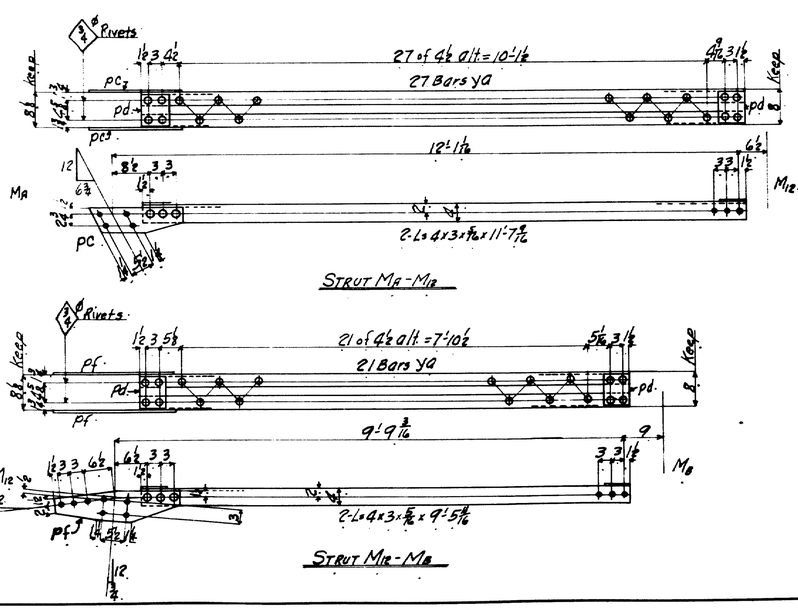

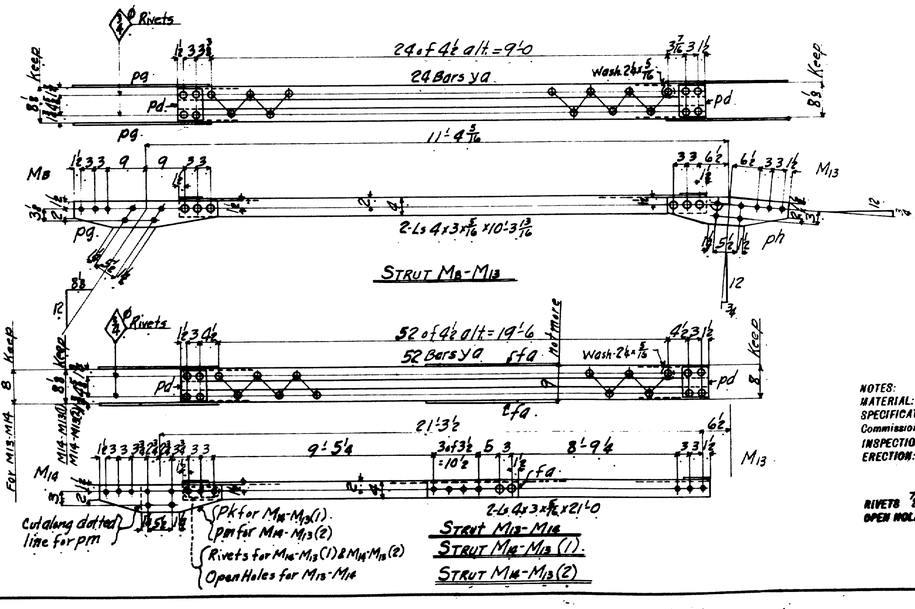

NOTES:
MATERIAL: O. H. Steel Card 855
SPECIFICATIONS: Maine State Highway Commission
INSPECTION: P. T. L.
ERECTION: A. B. Co.

RIVETS 7/8" unless noted
OPEN HOLES 15/16 Ø.

State of Maine
Maine Kennebec Bridge
over Kennebec River
between
Richmond & Dresden

AMERICAN BRIDGE CO.
AMBRIDGE PLANT
Dwgs. made at Ambridge No. 3 in charge of Nichols
Detailed by RDR Date 11/20/30 Checked by M&F Date 12/1/30
Fin. conn. chks. by T.H. Date 12-23-30
ORDER NO. G3822-S SHEET NO. 13

0 1 2 3 4 5 INCHES

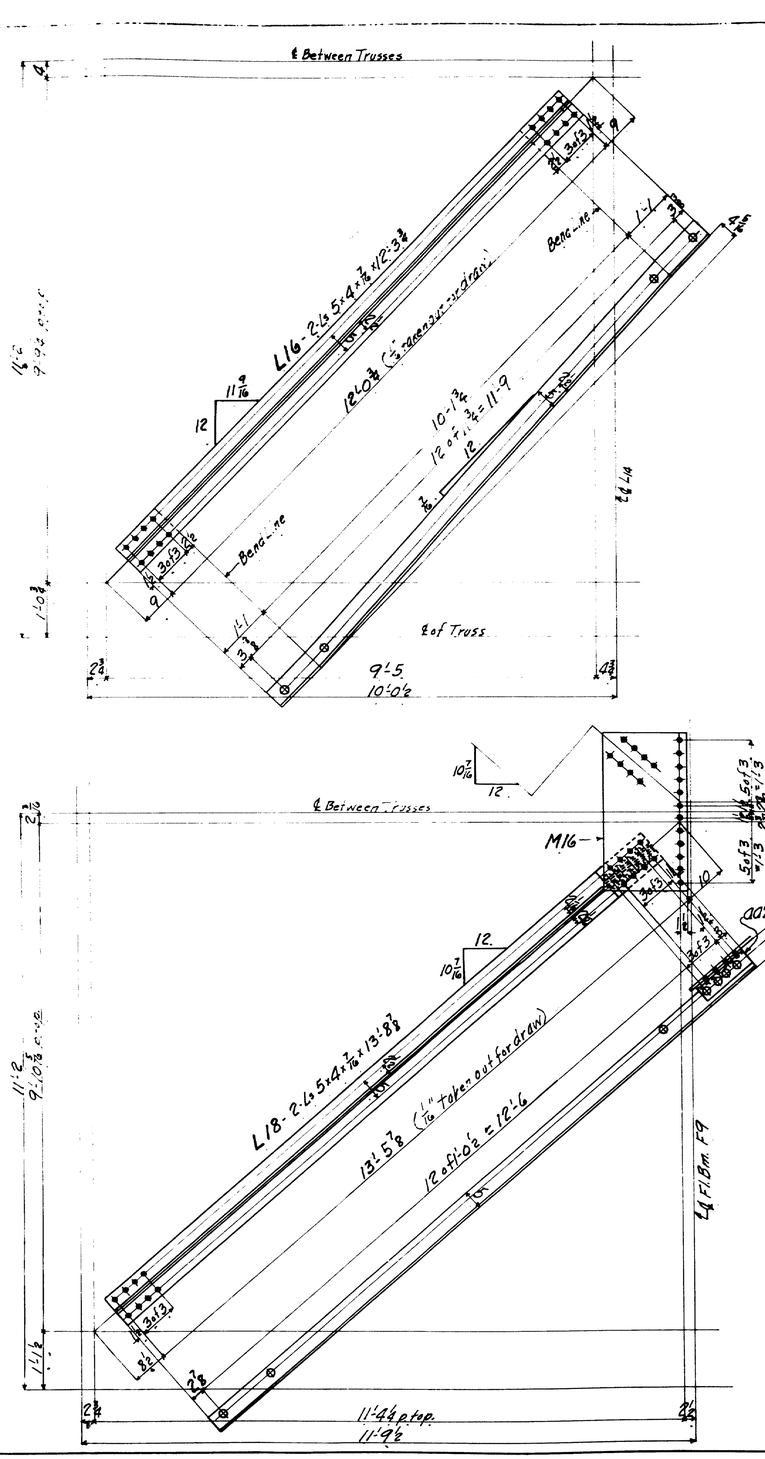

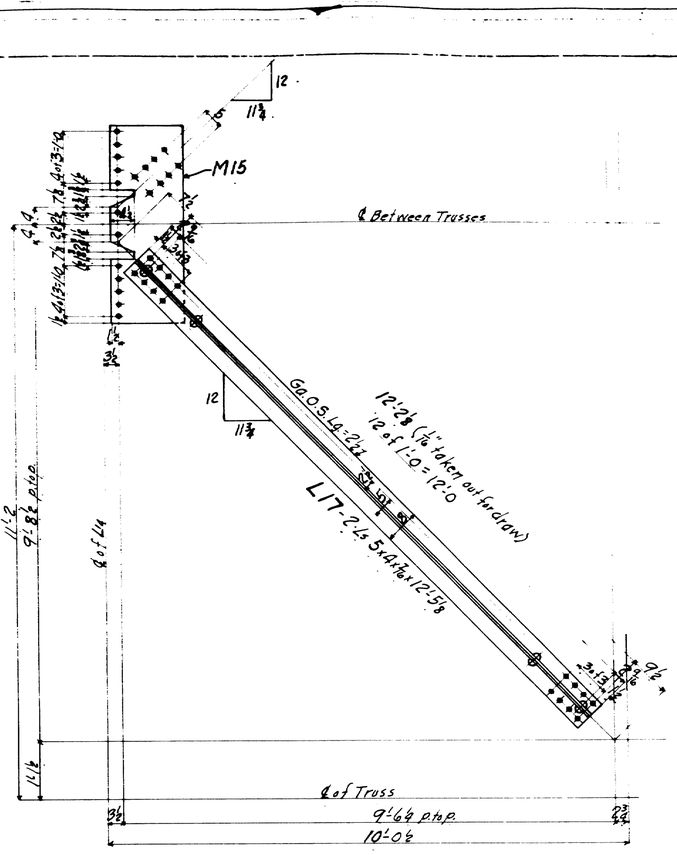

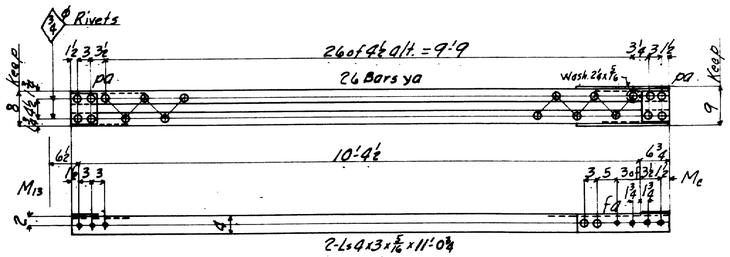

STRUT M13-Mc

4 DIAGONALS L16

8 Ls 5 4 7/16 12 3 3/4 — Bent 4-24'-7 1/2 39

2 DIAGONALS L17

4 Ls 5 4 7/16 12 5 1/4 — 2-24'-10 1/2 38

1 PIECE M15

1 ℄ 16 1/2 3/8 3 10 1/4 — S

2 DIAGONALS L18

4 Ls 5 4 7/16 13 8 3/8 — 2-27'-6 37
2 Ls 3 1/2 3 1/2 7/16 1.1/2 OOR — S
2 Ls OOL — S

1 PIECE M16

1 ℄ 19 5/8 3 0 — S

ONE STRUT M13-Mc

2 Ls 4 3 5/16 11 0 3/4 — 1-22'-1 1/2 55
2 Pls 6 7/16 7 1/2 pa — S
2 Fills 9 1/2 1 9/16 fa — S
26 Bars, 2'-0 Fa. 6 3/8 ya c.-c. — S
1 ⊙ 2 1/2 x 5/16 x 1 1/16 ø Hole — S

NOTES:
MATERIAL: O. H. Steel Card 855
SPECIFICATIONS: Maine State Highway Commission
INSPECTION: P. T. L.
ERECTION: A. B. Co.

RIVETS 7/8 dia unless noted
OPEN HOLES 15/16 dia.

State of Maine
Maine Kennebec Bridge
over Kennebec River
between
Richmond & Dresden

AMERICAN BRIDGE CO.
AMBRIDGE PLANT

Dwgs. made at Ambridge No. 3 in charge of Nichols
Detailed by RDR Date — Checked by H&K Date
Fld. corr. chk. by TH — Date 12-23-30
ORDER NO. G3822-5 — SHEET NO. 14

13-82

0 1 2 3 4 5 INCHES

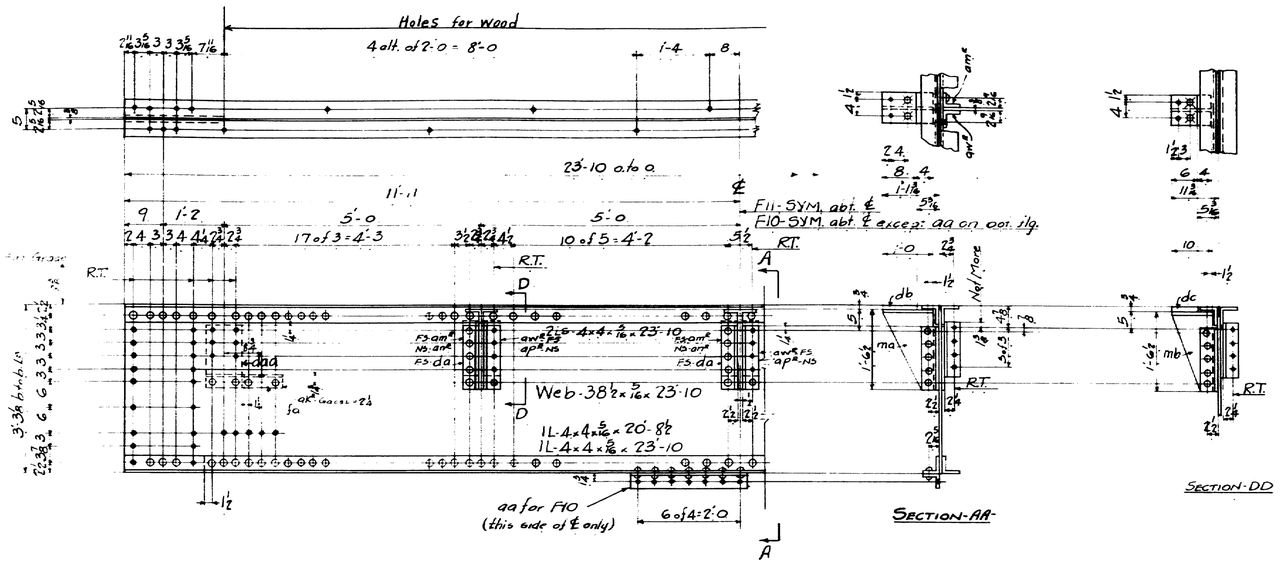

FLOOR BEAM F10
FLOOR BEAM F11 - Same as F10 except aa omitted.

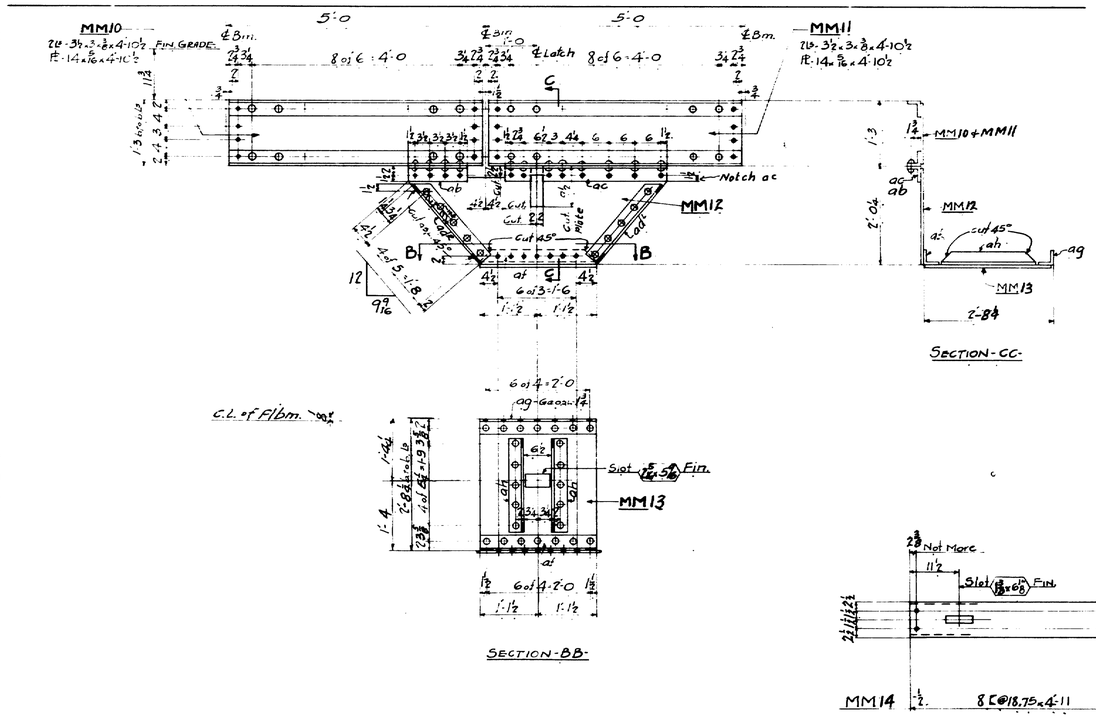

AN BRIDGE

ONE FLOOR BEAM F10
ONE FLOOR BEAM F11

2	Ls	4 4 5/16	20 8½				20'-8½	46
2	Pls	38½ 5/16	23 10				23'-10	68
6	Ls	4 4 5/16	23 10				23'-10	44
1	L	4 3½ 7/16	2 3	aa	for F10			S
6	Fills	3½ 5/16	1 2¾	da				S
4	"	" "	" "	daa				S
4	Fls	3 5/16	8¾	fa				S
4	Ls	3½ 3 3/8	1 5½	2 ak 2 ak				S
6	Ls	4 3½ 3/8	1 0⅝	4 amk 2 amk				S
6	Ls	4 3½ 3/8	1 0⅝	4 amk 2 amk				S
6	Ls	4 4 3/8	1 2¾	4 amk 2 amk				S
6	Ls	4 4 3/8	1 2¾	4 apk 2 apk				S
4	Pls	24I79.9	10	mb	cut			S
2	Pls	24I79.9	1 0	ma	cut			S
4	fills	6 ¾	7	dc				S
2	fills	8 ¾	7	db				S

ONE DIAPHRAM - MM12

1	Pl	23½ 3/8	5 0					S
2	Ls	3½ 3 3/8	2 1¼	adE				S

ONE DIAPHRAM - MM13

1	Pl	27 ½	2 7¼					S
1	L	3½ 3½ 3/8	2 3	af				S
1	L	3½ 3 3/8	2 3	ag				S
2	Ls	3½ 3 3/8	2 0	ah				S

ONE PIECE - MM14

1	8 [@18.75	4 11					4'-11	34

ONE DIAPHRAM - MM10
ONE " MM11

2	Pls	14 5/16	4 10½					S
4	Ls	3½ 3 3/8	4 10½					S
1	L	3½ 3 3/8	1 1½	ab	for MM13			S
1	L	3½ 3 3/8	3 1½	ac	for MM14			S

NOTES:
MATERIAL: O. H. Steel Card 855
SPECIFICATIONS: Maine State Highway Commission
INSPECTION: P. T. L.
ERECTION: A. B. Co.

RIVETS 7/8 15
OPEN HOLES 15/16 16
Holes marked R.T. to be punched 11/16"φ, reamed to 15/16"φ to a metal template or while parts are assembled.

State of Maine
Maine Kennebec Bridge
over Kennebec River
between
Richmond & Dresden

AMERICAN BRIDGE CO.
AMBRIDGE PLANT
Dwgs. made at Ambridge No. 3 in charge of Nichols
Detailed by A.T.R. Date 11-18-30 Checked by Date
Fld. conn. chk. by Date
ORDER NO. G3822- SHEET NO. 15

Rev. 3-18-31 ECN.

13-83

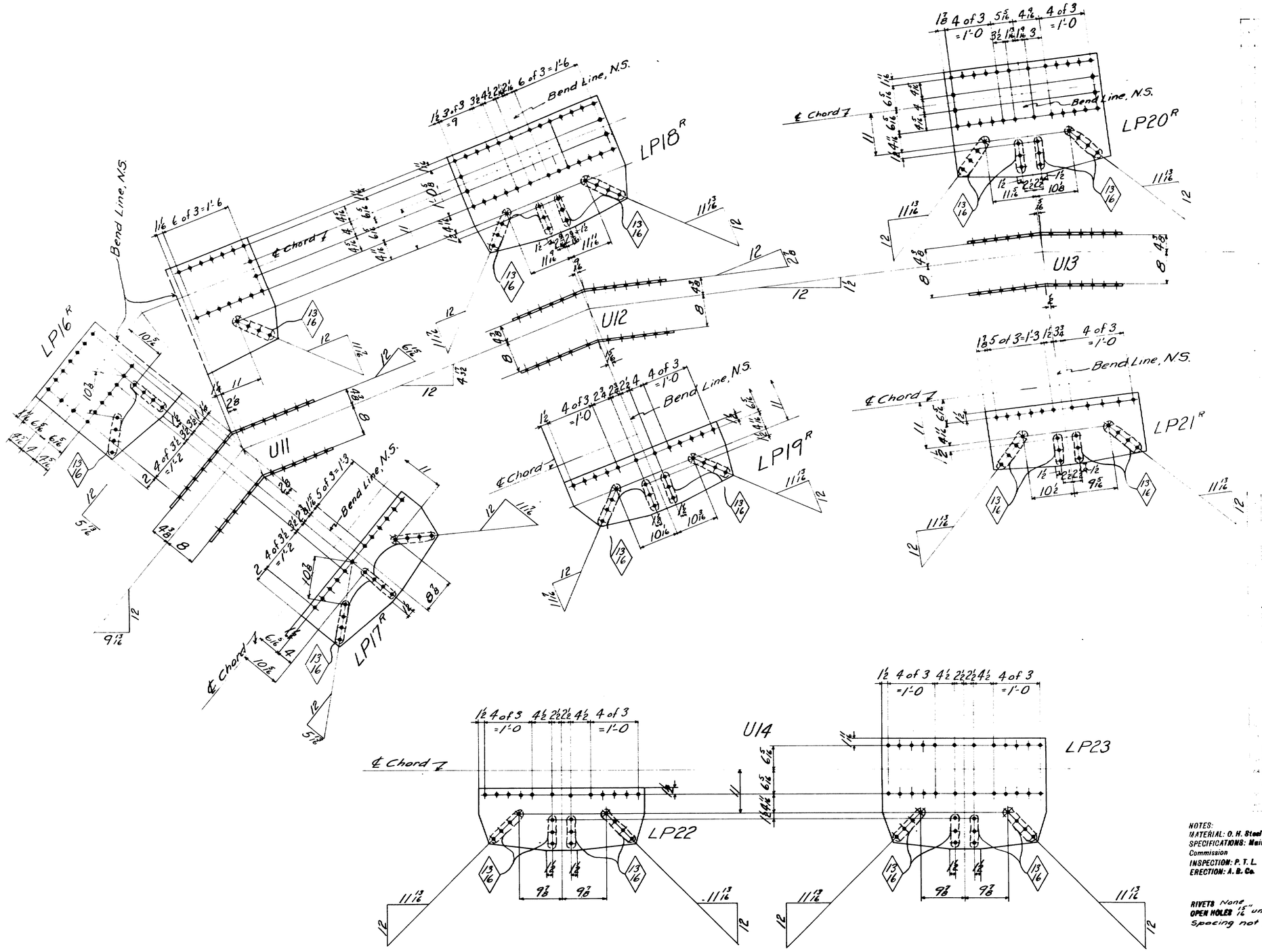

TOP LATERAL PLATES

2 Pls.	29⅜	3	11	LP16R	15'-9	72
2 Pls.	29⅜	3	11	LP16L	15'-9	72
2 Pls.	16⅜	3	4½	LP17R		5
2 Pls.	16⅜	3	4½	LP17L		5
2 Pls.	28⅜	3	6¼	LP18R	33'-6	73
2 Pls.	28⅜	3	6¼	LP18L	33'-6	73
2 Pls.	15⅜	3	3	LP19R		5
2 Pls.	15⅜	3	3	LP19L		5
2 Pls.	28⅜	3	1½	LP20R	33'-6	73
2 Pls.	28⅜	3	1½	LP20L	33'-6	73
2 Pls.	15⅜	2	11¾	LP21R		5
2 Pls.	15⅜	2	11¾	LP21L		5
2 Pls.	15⅜	3	5	LP22		5
2 Pls.	28⅜	3	5	LP23	33'-6	73

NOTES:
MATERIAL: O. H. Steel Card 855
SPECIFICATIONS: Maine State Highway Commission
INSPECTION: P. T. L.
ERECTION: A. B. Co.

RIVETS None
OPEN HOLES ⅞" unless noted
Spacing not given = 3"

State of Maine
Maine Kennebec Bridge
over Kennebec River
between
Richmond & Dresden

AMERICAN BRIDGE CO.
AMBRIDGE PLANT
Dwgs. made at Ambridge No. 3 in charge of Nichols
Detailed by R.D.N. Date 11-18-30 Checked by W. M. Date 12/19/30
Fin. comm. chk. by T.H. Date 12-23-30
ORDER NO. G3822-S SHEET NO. 16

13-84

0 1 2 3 4 5 INCHES

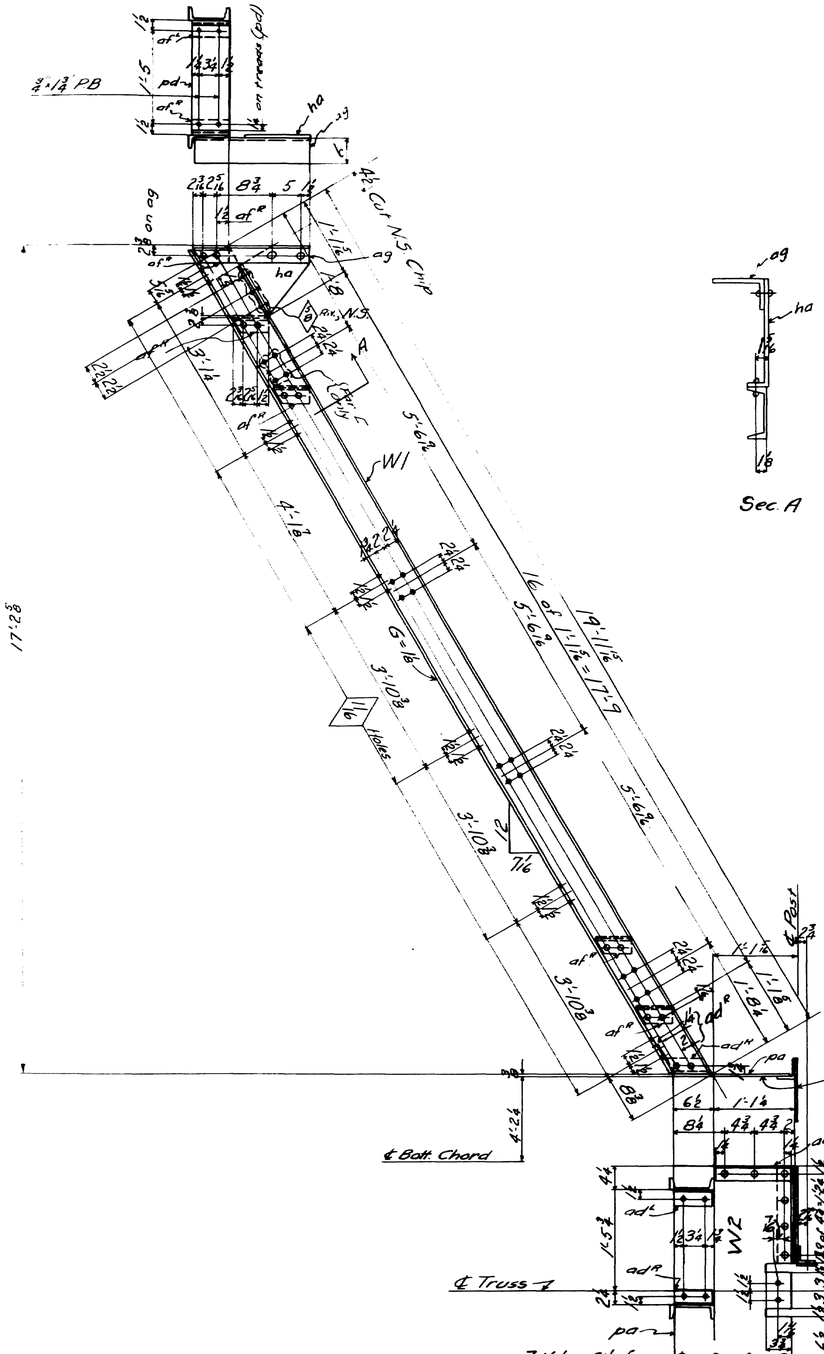

Sec. A

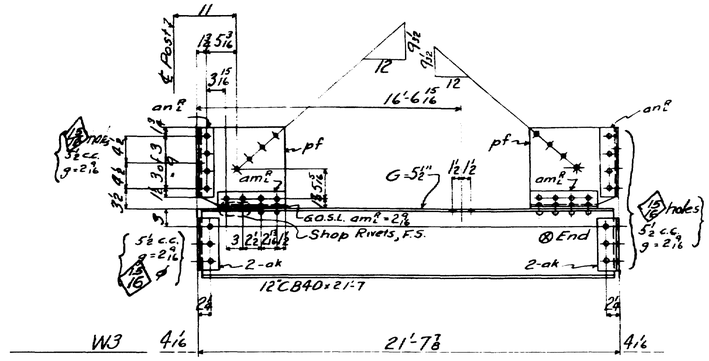

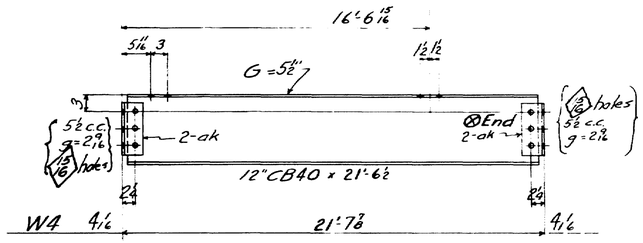

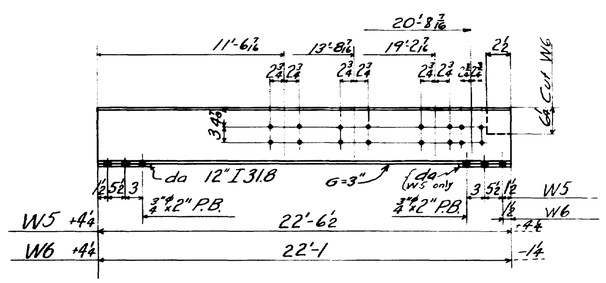

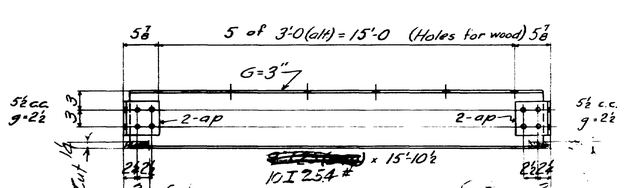

AMERICAN BRIDGE COMPANY

1 Stair						W1		
2	L	6"×10.5#	20	3½			20'-6½	35
2	L	3 3 3/8		7½	1 adR			S
36	L	3 3 ½		6	1 adL 18 afR			S
1	L	6 3½ 3/8	1	7 7/8	ag			S
1	PL	8 3/8	1	3½	ha	Bent		S
18	Chk.PL	6 3/8	1	7½	pd	Checkered		S
72	P.B.	¾"×1¾			Button Hd.-Hex.Nut			S
1 Landing						W2		
1	Chk.PL	19 3/8	2	11½	pa	Checkered		S
1	L	4 3 3/8	1	0	aa			S
1	L	4 3½ 5/16	1	2½	ab			S
1	L	4 3½ 3/8	1	5½	ac			S
1	PL	14½ 3/8	1	5½	pb			S
1	Fil.	4 ½		11¼	fa			S
1 Strut						W3		
1	12CB40		21	7 7/8			21'-7	6
4	L	4 3½ 3/8		9	ak			S
4	L	4 3 3/8		11½	2 amR 2 amL			S
2	PL	14 1/16	1	3¼	pf			S
4	L	4 3 3/8	1	0¼	2 anR 2 anL			S
1 Strut						W4		
1	12CB40		21	7 7/8			21'-7	6
4	L	4 3½ 3/8		9	ak			S
1 Beam						W5		
1	12 I 31.8		22	6½			22'-6½	20
3	2 Fil.	5 3/8		11½	da			S
4	P.B.	¾"×2"			Hex.H&N.			S
1 Beam						W6		
1	12 I 31.8		22	1			22'-1	21
1	Fil.	5 3/8		11½	da			S
2	P.B.	¾"×2"			Hex.H&N.			S
4 Beams						W7		
4	9 I 25		15	10½	Sec. B40		15'-10½	22
16	L	6 4 3/8	6	ap				S

NOTES:
MATERIAL: O. H. Steel Card 856
SPECIFICATIONS: Maine State Highway Commission
INSPECTION: P. T. L.
ERECTION: A. B. Co.

RIVETS ¾" unless noted
OPEN HOLES 13/16" unless noted
Spacing not given = 3"

State of Maine
Maine Kennebec Bridge
over Kennebec River
between
Richmond & Dresden

AMERICAN BRIDGE CO.
AMBRIDGE PLANT
Dwgs. made at Ambridge No. 3 in charge of Nichols
Detailed by R.D.M. Date 12-1-30 Checked by . . Date 12-30
Fin. comp. dtls. by T.H Date 12-22-30
ORDER NO. G3822-S SHEET NO. 17

13-85

0 1 2 3 4 5 INCHES

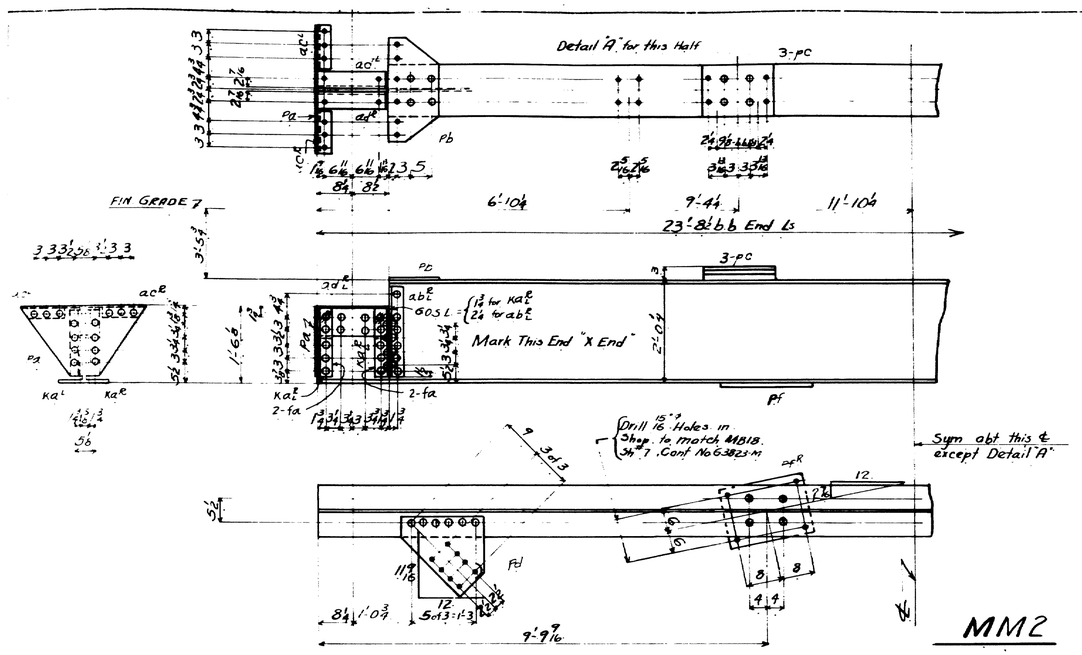

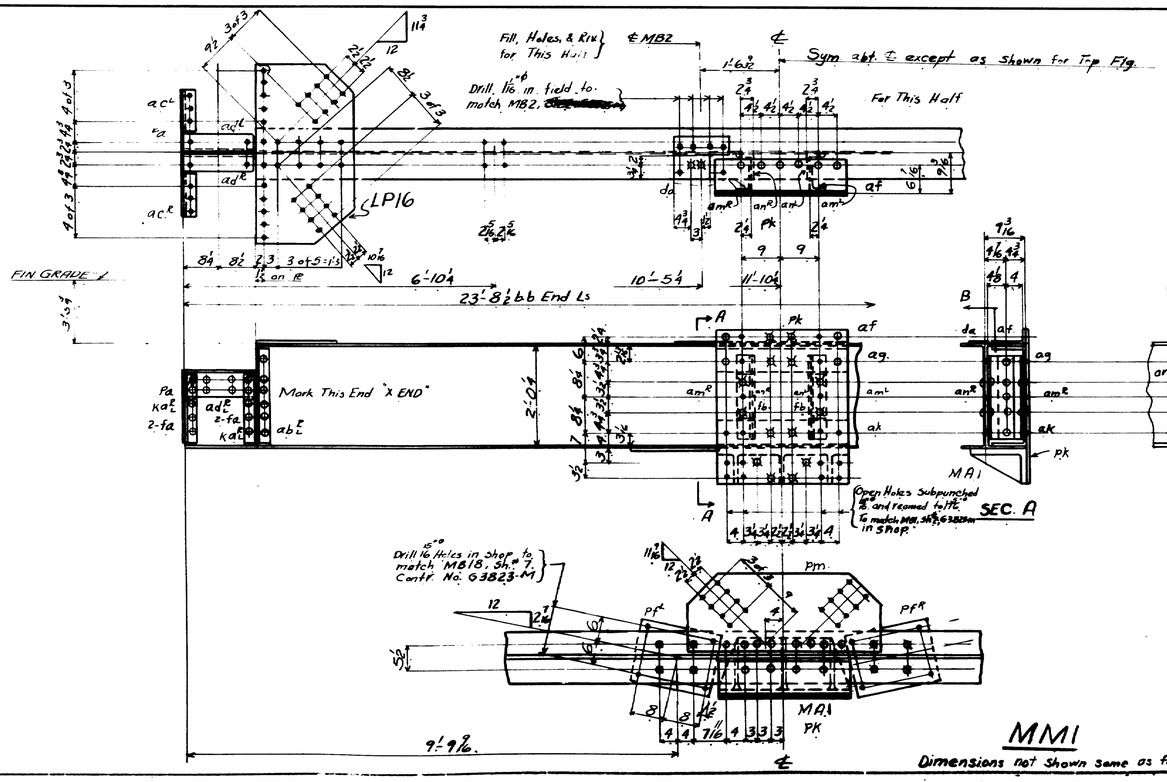

Dimensions not shown same as for MM2

NOTE:
Deliver MM1 & MM2 to Machine Shop for Assembly with Machinery

AMERICAN BRIDGE COMPANY

ONE MACHINERY STRUT - MM2

	1	29	CB	120		23	8½	3
4	2	PL		16	3/8	2	6	pa
4	8	L	3	3	5/16	1	34	ka
4	4	L	3	3½	5/16	1	84	ad
4	4	L	3	3	5/16		102	ab
4	4	L	6	4	½	1	44	fa
	2	PL		12	3/8	2	0	pb
	3	PL		13	1	1	9 3/8	pc
	2	PL		18	3/8	1	6	pd
2-R 2-L	2	PL		15	5/8	1	7	pf
16	8	PL		3	½		24	fa

ONE MACHINERY STRUT - MM1

	1	29	CB	120		23	8½	3
	2	PL						pa
	8	PL						pa
	1	L	8	3½	5/8	2	6	ac
	1	L	8	6	¾	2	6	ag
		L	8	6	¾	2	6	ak
	2	L	6	4	½	1	7½	am
	2	L	6	5	½	1	7½	an
	1	PL		30	½	3	0	pk
	2	PL			5/8		9½	fb
	1	PL		18	3/8	3	84	pm
	2	PL						pf

Cut 6 to 6

1 Roller Bearing Casting - MA1 Detailed on Sh. 7, G3823-M

2 Pls 21 3/8 3 6 2-LP16 S

NOTES:
MATERIAL: O. H. Steel Card 855
SPECIFICATIONS: Maine State Highway Commission
INSPECTION: P. T. L.
ERECTION: A. B. Co.

RIVETS 7/8"ø
OPEN HOLES 1 1/16"ø unless noted

State of Maine
Maine Kennebec Bridge
over Kennebec River
between
Richmond & Dresden

AMERICAN BRIDGE CO.
AMBRIDGE PLANT
Dwgs. made at Ambridge No. 3 in charge of Nichols
Detailed by T.W.E. Date 12-1-30 Checked by ... Date ...
Fld. conn. chk. by ... Date ...
ORDER NO. G3822-S SHEET NO. 18

0 1 2 3 4 5 INCHES

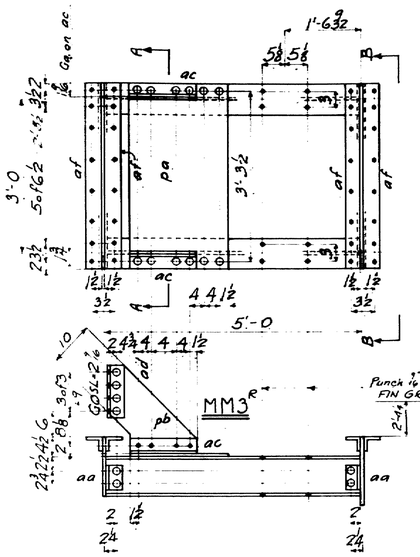

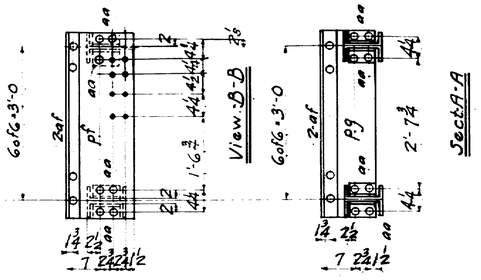

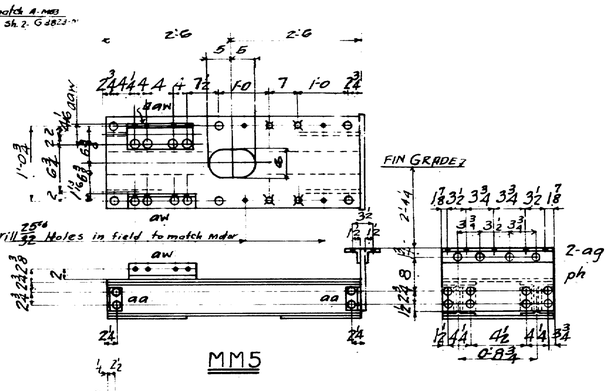

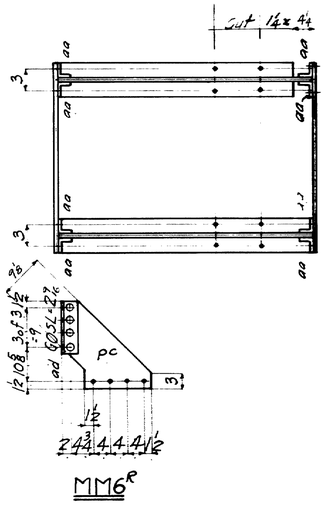

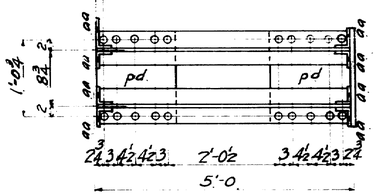

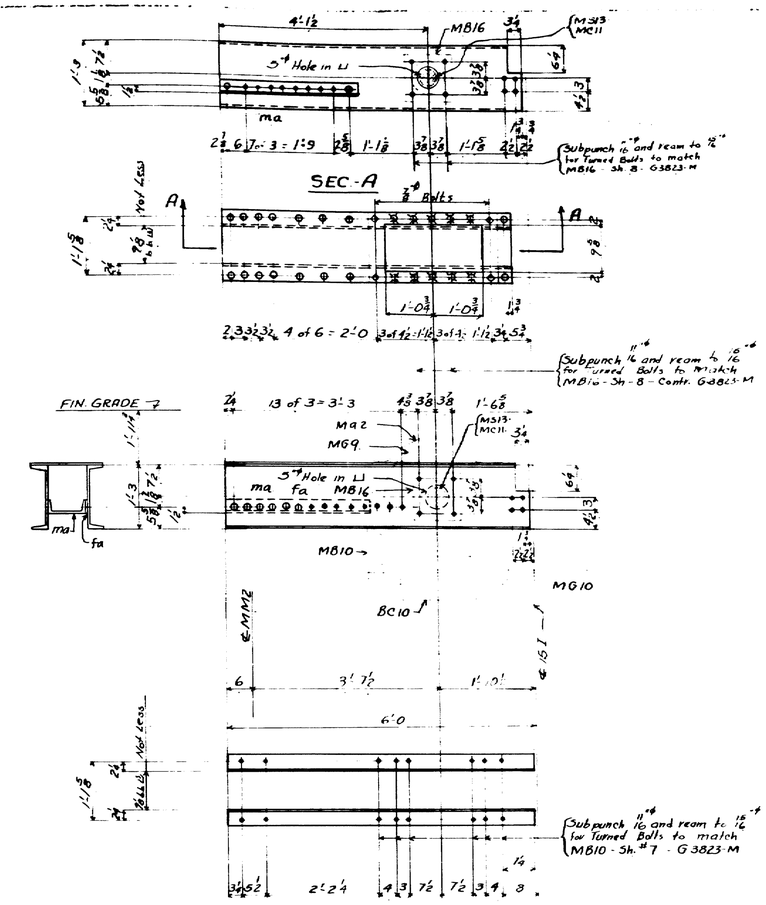

NOTE:
Deliver MM4 & MM7 to machine shop for assembly with Machinery

One Machinery Support MM4 ✓

2	8	CB	36	4	10½		S
1	PL		23	3/8	3	7½ pa	S
2	Ls	3½	3	3/8	1	3 ac	S
14	7 Ls	3½	3½	3/8	0	5¾ aa	S
2	1 L		6	3½	3/8	0 5¾ ab	S
	4 Ls		3	3	3/8	3 7½ af	S
1	PL		13¾	½	3	7½ pf	S
1	PL		11	½	3	7½ pg	S

One Machinery Support MM5

2	8	CB	36	4	10½		S
1	PL		18	3/8	4	10½	S
2	Ls	3½	3	½	1	3 aw	S
2	PL		18	3/8	1	6 pd	S
1	PL		13¾	½	1	64 ph	S
2	Ls	3	3	3/8	1	64 ag	S
7	Ls					aa	S
1	L					ab	S

2 Machinery Supports 1-MM3R 1-MM3L

4	2 Ls	4	3½	3/4	1	0 ad	S
2	PL		20	3/4	1	84 pb	S

2 Machinery Supports 1-MM6R 1-MM6L

2	Ls					ad	S
2	PL		20	3/4	1	10¾ pc	S

One Machinery Support MM7

2	15	WT	50	5	11/16		S
1	PL		16½	3/8	5	8	S
1	9 WT	25		2	9¾	ma	S
1	PL		3	5/8	2	9¾ fa	S
2	Bearings					MB16 detailed on Sh. 8 - G3823-M	
1	Bearing					MB10 detailed on Sh. 7 - G3823-M	
1	Bearing Cap					BC10 detailed on Sh. 7 - G3823-M	
1	Worm					MG10 detailed on Sh. 7 - G3823-M	

1	Shaft	M313 detailed on Sh. 6 G3823-M
2	Couplings	MC11 detailed on Sh. 7 - G3823-M
1	Hood	Ma2 detailed on Sh. 6 G3823-M
8	Turned Bolts for 13/16 Holes	for MB16
12	Turned Bolts for 13/16 Holes	for MB10
8	Turned Bolts for 13/16 Holes	for BC10
4	P.B. - 3/8"	1½ for Ma2
2	Set Screws	for MC11
1	Worm Wheel	MG9 Detailed on Sh. 7 - G3823-M

NOTES:
S MATERIAL: O. H. Steel Card 855
S SPECIFICATIONS: Maine State Highway Commission
S INSPECTION: P. T. L.
S ERECTION: A. B. Co.

RIVETS 7/8" ø
OPEN HOLES 13/16 unless noted

Rev. 1-25-38 ECN. Hand hole in MM5
Rev. 11-29-37 ECN.

State of Maine
Maine Kennebec Bridge
over Kennebec River
between
Richmond & Dresden

AMERICAN BRIDGE CO.
AMBRIDGE PLANT
Dwgs. made at Ambridge No. 3 in charge of Nichols
Detailed by TWS Date 12-4 Checked by TH Date 12/7/30
Fld. conn. chk. by Date
ORDER NO. G3822-S SHEET NO. 19

13-07

0 1 2 3 4 5 INCHES

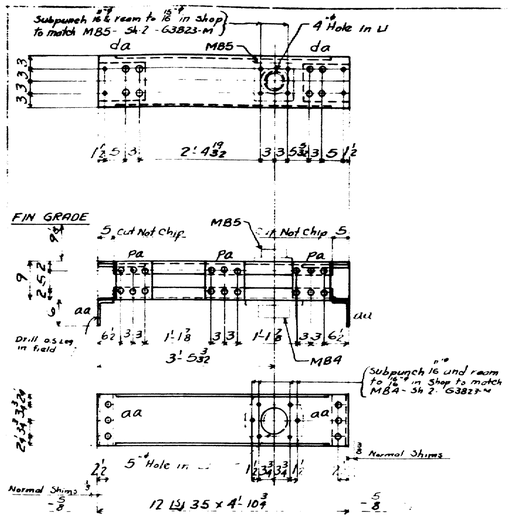

MM8

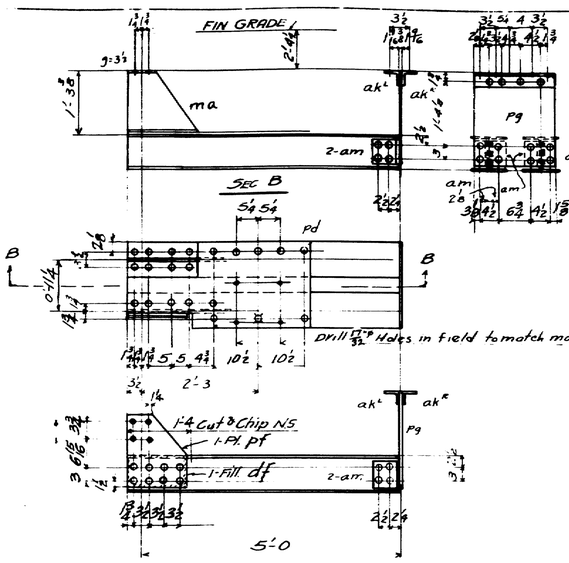

MM16

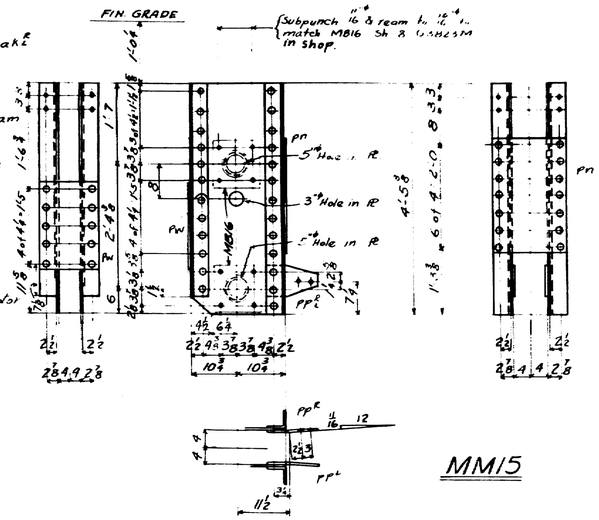

MM15

Deliver to Machine Shop for assembly with Machinery Parts - See FS Sheets

ONE MACHINERY SUPPORT - MM8

1	12	⏊	35	4	10 3/4			4'-10 3/4	S
1	12	⏊	35	4	10 1/2			4'-10	S
2	PL		9	1/2	11		da		S
2	L	6	4	1/2	1	0	aa		S
3	PL		9	3/4	8 1/2		pa		S

ONE MACHINERY SUPPORT - MM9

2	15	I	60.8	5	7			5'-7	88
1	PL		41	3/8	1	11 3/4	pb		S
1	PL		41	3/8	1	7 1/2	pc		S
1	L	6	3 1/2	1/2		10 3/8	ab		S
1	L	6	3 1/2	1/2		10 3/8	ac		S
2	L	6	3 1/2	1/2		7	adL		S
4	PL		6	5/8	1	9 1/2	ac		S
1	PL		6	1/2	1	5 1/2	dd		S

ONE MACHINERY SUPPORT - MM16

2	8	CB	24		5	3 5/16		5'-3	S
1	15	I	60.8		1	4 3/4	ma	1'-4 1/4	88
1	PL		19	3/8	3	6 1/2	pd		S
1	PL		20	3/8	1	10 3/8	pg		S
2	L	3	3	3/8	1	8 1/2	akL		S
4	L	6	3 1/2	3/8		6	am		S

4-MACHINERY SUPPORTS - 2-MM17R, 2-MM17L

4	10	LI	25		4	11 7/16		4'-10 1/2	
8	L	8	6	1/2		7 1/4	2-am 4-am		S

2-MACHINERY STRUTS - MM18R

2	L	3 1/2	2 1/2	3/8	5	1 3/8			S
2	PL		7	3/8		8 3/4	pk		S

2-MACHINERY STRUTS - MM19R, L

2	L	3 1/2	2 1/2	3/8	5	1 3/8			S
2	PL		9	3/8		5 1/2	pm		S

2-MACHINERY STRUTS MM15

4	L	3	4	7/16	4	0 8			S
4	L	4	4	3/8	4	5 3/8			S
4	PL		20	3/8	4	5 3/8			S
2	PL		16 1/2	3/8	2	3	pn		S
4	PL		7	3/8	1	0	2-ppR 2-ppL		S
2	PL		16 1/2	3/8	1	8	pw		S

2-MACHINERY SUPPORTS - MM20

2	PL		21	3/8	1	6 1/2	pt		S
8	L	3	3	1/2	1	7	ap		S
4	L	3	3	1/2	1	3	at		S
4	L	3	3	1/2	1	3	av		S

Deliver to machine Shop for assembly with Machinery Parts - See FS Sheets

11-MACHINERY SUPPORTS

1	L	3	2	3/8	2	1 13/16	MM21		S
1	L	3	2	3/8	1	10 1/2	MM22		S
1	L	3	2	3/8	1	10 1/2	MM23		S
1	L	3	2	3/8	1	10 1/2	MM24		S
1	L	3	2	3/8	1	10 1/2	MM25		S
1	L	3	2	3/8	1	7 1/8	MM26		S
1	L	3	2	3/8	1	1 7/16	MM27		S
1	L	3	2	3/8		9	MM28		S
1	L	3	2	3/8	1	1 3/4	MM29		S
1	L	3	2	3/8	1	5 1/16	MM30		S
1	L	3	2	3/8	1	11 3/16	MM31		S

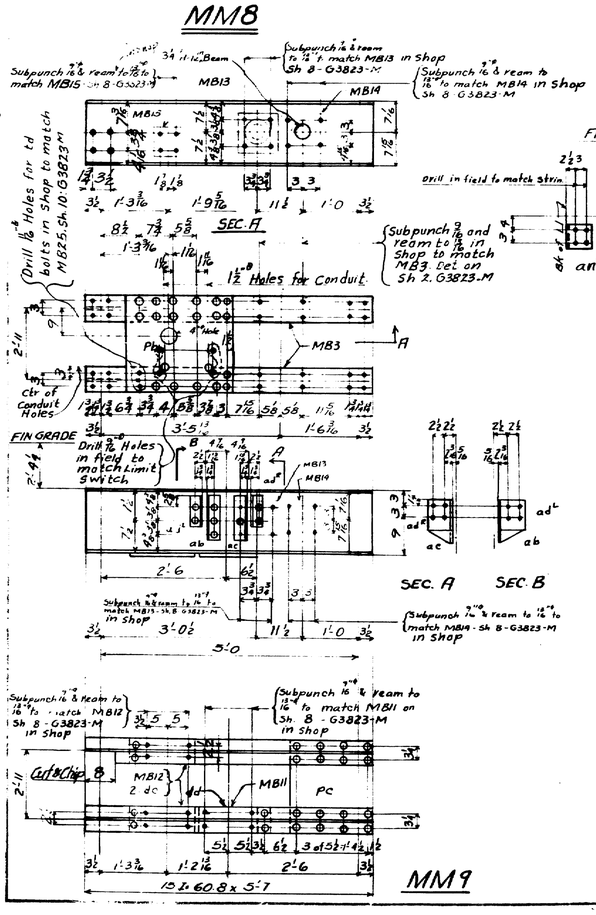

MM17R

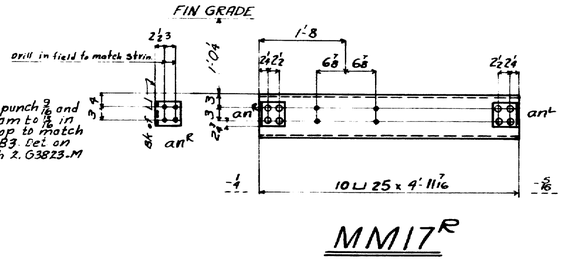

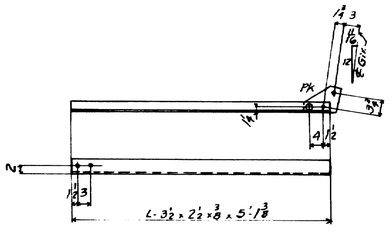

MM18R

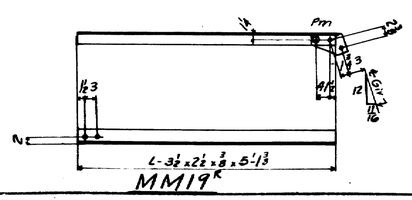

MM19R

MM9

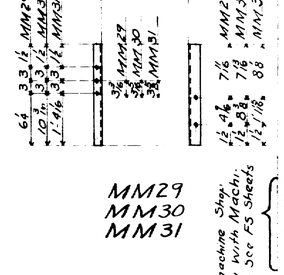

MM29
MM30
MM31

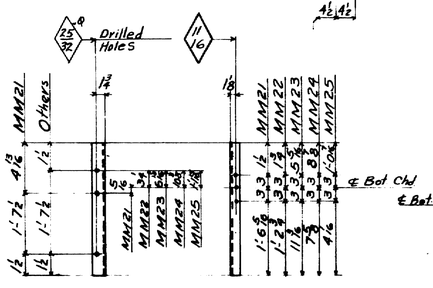

MM21
MM22
MM23
MM24
MM25

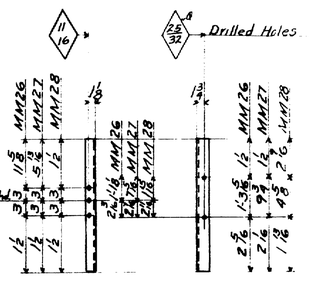

MM26
MM27
MM28

NOTES:
MATERIAL: U. H. Steel Card 855
SPECIFICATIONS: Maine State Highway Commission
INSPECTION: P. T. L.
ERECTION: A. B. Co.

RIVETS 7/8"ø
OPEN HOLES 15/16" unless noted

Rev 1-4-38 ECN.
Rev 11-29-37 ECN.

State of Maine
Maine Kennebec Bridge
over Kennebec River
between
Richmond & Dresden

AMERICAN BRIDGE CO.
AMBRIDGE PLANT
Dwgs. made at Ambridge No. 3 in charge of Nichols
Detailed by T.W.A. Date 12/13/38 Checked by T.H. Date 2/16
Pat. comm. ckd. by Date
ORDER NO. G3822-S SHEET NO. 2-30

0 1 2 3 4 5 INCHES

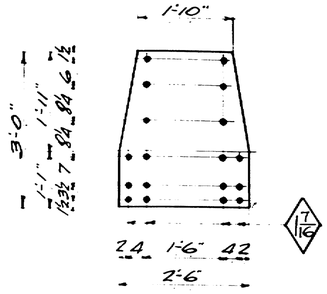

R- 30 x ¼ x 3'-0 - SP1
R- 30 x ⅜ x 3'-0 - SP2
R- 30 x ⅛ x 3'-0 - SP3
R- 30 x 1/16 x 3'-0 - SP4
} Shims for MB1 detailed on Sheet #2 Contract #G3823M

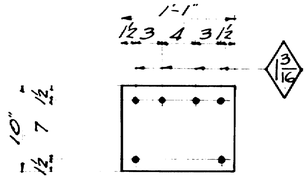

R- 10 x ¼ x 1'-1" - SP5
R- 10 x ⅛ x 1'-1 SP6
R- 10 x 1/16 x 1'-1 SP7
} Shims for MB2 detailed on Sheet #2 Contract #G3823M

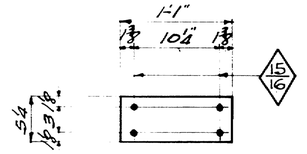

R- 5¼ x ½ x 1'-1" - SP8
R- 5¼ x ¼ x 1'-1" - SP9
R- 5¼ x ⅛ x 1'-1 - SP10
R- 5¼ x 1/16 x 1'-1 - SP11
} Shims for MB3 detailed on Sheet #2 Contract #G3823M

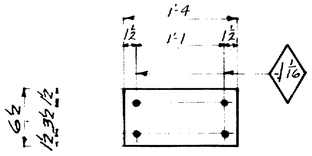

R- 6½ x ⅛ x 1'-2¼ - SP13
R- 6½ x 1/16 x 1'-2¼ - SP14
} Shims for MB6 detailed on Sheet #2 Contract #G3823M

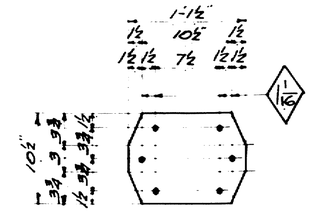

R- 10½ x ¼ x 1-1½ - SP15
R- 10½ x ⅛ x 1-1½ - SP16
R- 10½ x 1/16 x 1-1½ - SP17
} Shims for MB4 detailed on Sheet #2 Contract #G3823M

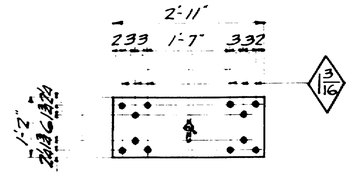

R- 14 x ½ x 2'-11" - SP18
R- 14 x ¼ x 2-11 - SP19
R- 14 x ⅛ x 2-11 - SP20
R- 14 x 1/16 x 2-11 - SP21
} Shims for MC5 detailed on Sheet #4 Contract #G3823M

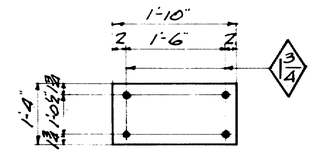

R- 16 x ½ x 1'-10" - SP22
R- 16 x ¼ x 1'-10" - SP23
R- 16 x ⅛ x 1'-10" - SP24
R- 16 x 1/16 x 1'-10" - SP25
} Shims for MW3 detailed on Sheet #5 - Contract #G3823M

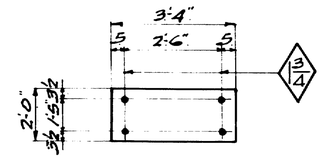

R- 24 x ½ x 3'-4" - SP26
R- 24 x ¼ x 3-4 - SP27
R- 24 x ⅛ x 3-4 - SP28
R- 24 x 1/16 x 3-4 - SP29
} Shims for MW9 detailed on Sheet #5 - Contract #G3823M

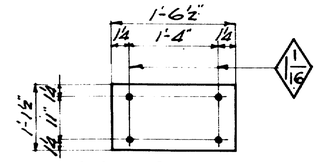

R- 13½ x ½ x 1'-6½ - SP30
R- 13½ x ¼ x 1-6½ - SP31
R- 13½ x ⅛ x 1-6½ - SP32
R- 13½ x 1/16 x 1-6½ - SP33
} Shims for MB18 detailed on Sheet #7 - Contract #G3823M

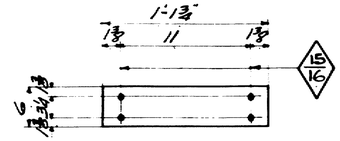

R- 6 x ¼ x 1-1⅜ - SP34
R- 6 x ⅛ x 1-1⅜ - SP35
R- 6 x 1/16 x 1-1⅜ - SP36
} Shims for MB11 detailed on Sheet #8 Contract #G3823M

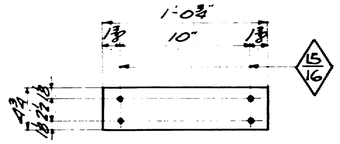

R- 4¾ x ¼ x 1'-0¾ - SP37
R- 4¾ x ⅛ x 1-0¾ - SP38
R- 4¾ x 1/16 x 1-0¾ - SP39
} Shims for MB12 detailed on Sheet #8 Contract #G3823M

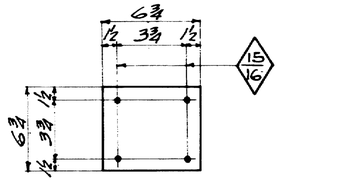

R- 6¾ x ¼ x 0'-6¾ - SP40
R- 6¾ x ⅛ x 0'-6¾ - SP41
R- 6¾ x 1/16 x 0'-6¾ - SP42
} Shims for MB15 detailed on Sheet #8 Contract #G3823M

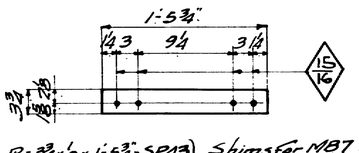

R- 3¾ x ⅛ x 1'-5¾ - SP43
R- 3¾ x 1/16 x 1-5¾ - SP44
} Shims for MB7 detailed on Sheet #10 - Contract #G3823M

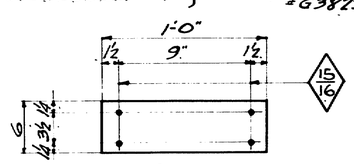

R- 6 x ¼ x 1'-0" - SP45
R- 6 x ⅛ x 1-0 - SP46
R- 6 x 1/16 x 1-0 - SP47
} Shims for MB8 detailed on Sheet #10 - Contract #G3823

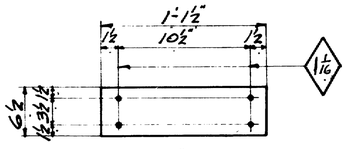

R- 6½ x ¼ x 1'-1½ - SP48
R- 6½ x ⅛ x 1-1½ - SP49
R- 6½ x 1/16 x 1-1½ - SP50
} Shims for MB9 detailed on Sheet #10 - Contract #G3823M

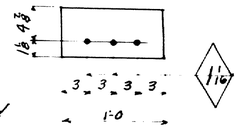

Pl 6 x ¼ x 1'-0 - SP51
Pl 6 x ⅛ x 1'-0 - SP52
Pl 6 x 1/16 x 1'-0 - SP53
} Shims for machinery Support MM8. Det. on Sh 20 - G3822-5

AMERICAN BRIDGE COMPANY

1	PL	30	½	3	0	1-SP1
2	PL	30	¼	3	0	2-SP2
2	PL	30	⅛	3	0	2-SP3
1	PL	30	1/16	3	0	1-SP4
2	PL	10	¼	1	1	2-SP5
2	PL	10	⅛	1	1	2-SP6
1	PL	10	1/16	1	1	1-SP7
2	PL	54	½	1	1	2-SP8
16	PL	54	¼	1	1	16 SP9
12	PL	54	⅛	1	1	12-SP10
6	PL	54	1/16	1	1	6-SP11
3	PLs	6½	⅛	1	4	3-SP13
1	PL	6½	1/16	1	4	1-SP14
2	PL	10½	¼	1	1½	2-SP15
2	PL	10½	⅛	1	1½	2-SP16
1	PL	10½	1/16	1	1½	1-SP17
1	PL	14	½	2	11	1-SP18
3	PL	14	¼	2	11	3-SP19
1	PL	14	⅛	2	11	1-SP20
1	PL	14	1/16	2	11	1-SP21
4	PL	16	½	1	10	4-SP22
8	PL	16	¼	1	10	8-SP23
8	PL	16	⅛	1	10	8-SP24
4	PL	16	1/16	1	10	4-SP25
2	PL	24	½	3	4	2-SP26
4	PL	24	¼	3	4	4-SP27
4	PL	24	⅛	3	4	4-SP28
2	PL	24	1/16	3	4	2-SP29
6	PL	13½	½	1	6½	6-SP30
12	PL	13½	¼	1	6½	12-SP31
12	PL	13½	⅛	1	6½	12-SP32
6	PL	13½	1/16	1	6½	6-SP33
2	PL	6	¼	1	1¾	2-SP34
2	PL	6	⅛	1	1¾	2-SP35
1	PL	6	1/16	1	1¾	1-SP36
4	PL	4¾	¼	1	0¾	4-SP37
4	PL	4¾	⅛	1	0¾	4-SP38
2	PL	4¾	1/16	1	0¾	2-SP39
2	PL	6¾	¼		6¾	2-SP40
2	PL	6¾	⅛		6¾	2-SP41
1	PL	6¾	1/16		6¾	1-SP42
24	PL	3¼	⅛	1	5¾	24-SP43
8	PL	3¼	1/16	1	5¾	8-SP44
6	PL	6	¼	1	0	6-SP45
4	PL	6	⅛	1	0	4-SP46
2	PL	6	1/16	1	0	2-SP47
6	PL	6½	¼	1	1½	6-SP48
4	PL	6½	⅛	1	1½	4-SP49
2	PL	6½	1/16	1	1½	2-SP50
4	Pls	6	¼	1	0	4-SP51
4	Pls	6	⅛	1	0	4-SP52
2	Pls	6	1/16	1	0	2-SP53

NOTES:
MATERIAL: O. H. Steel Card 855
SPECIFICATIONS: Maine State Highway Commission.
INSPECTION: P. T. L.
ERECTION: A. B. Co.

RIVETS
OPENHOLES AS NOTED

State of Maine
Maine Kennebec Bridge
over Kennebec River
between
Richmond & Dresden

AMERICAN BRIDGE CO.
AMBRIDGE PLANT
Dwgs made at Ambridge No. 3 in charge of Nichols
Detailed by HBK Date 12-2-30 Checked by Date
Fld. comm. chk. by Date
ORDER NO. G3822-5 SHEET No. 21

Checked by H.B.K. 12-2-30

0 1 2 3 4 5 INCHES

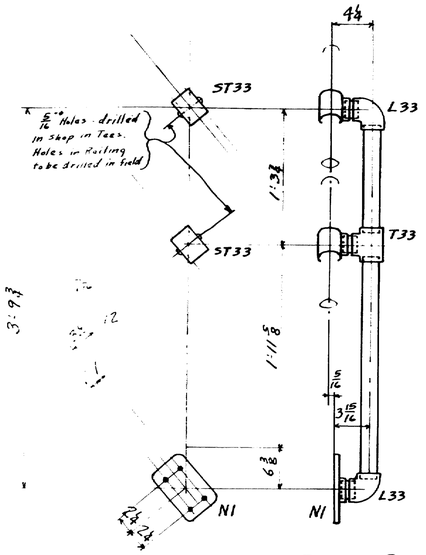

ENLARGED DETAIL OF POST - P1R

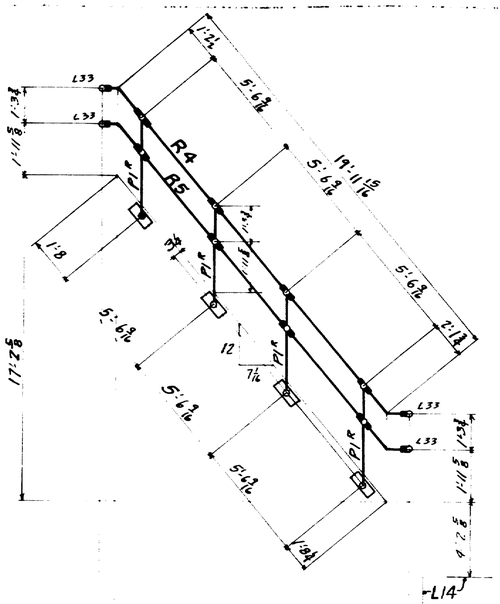

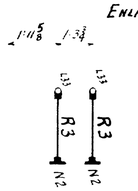

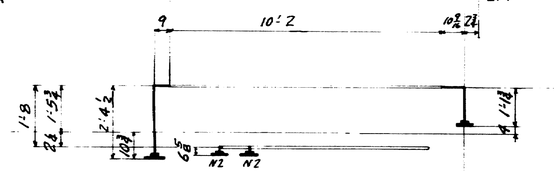

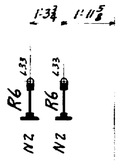

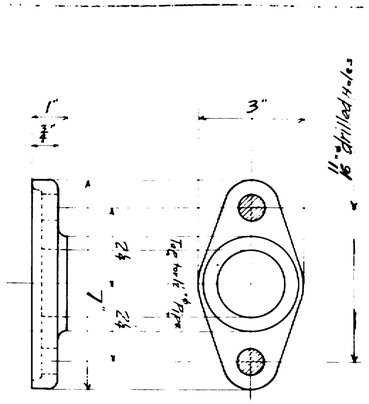

6-FLANGES - N2
MATERIAL - CAST IRON
PATTERN No. - 083A
WEIGHT = 1.5#
Req. - Stock

7 - BASES - N1
MATERIAL - CAST IRON
PATTERN No. - AB2195△
WEIGHT = 4#
Amb Req. # C1Z215

G3822-S — Page P1

REQUIRED LIST

No. of Pieces	Mark	Description	Dia.	Length
1	R1	Railing	1½	19'-2
1	R2	"	"	15'-8
2	R3	"	"	2'-4
1	R4	"	"	21'-8
1	R5	"	"	21'-8
2	R6	"	"	1'-2
4	P1R	Rail Posts	"	3'-10
3	P1L	" "	"	3'-10

14 - Pins - 4"ϕ × 2⅝"

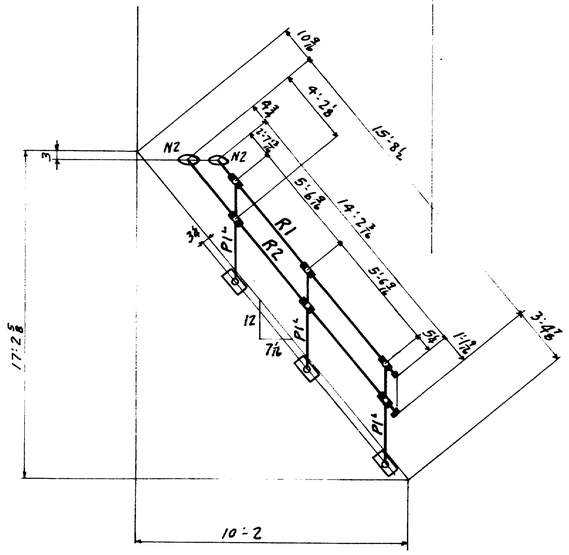

All Pipe 1½"ϕ std. All Threads right hand.

Material Order

No. of Pcs.	Mark	Description	Item.
7	N1	Bases for P1R & P1L	ord. on P1
6	N2	Flanges for R1,2,3+6	ord. on P1
14	L33	Ells for P1R & P1L	S
7	T33	Tees " "	S
14	ST33	" " "	S
14	Nipples - 0'-4¼ " "		S
7	" - 0'-3 15/16 " "		S
106	Lin. ft. - 1½"ϕ Pipe		S
14	Pins - ¼"ϕ × 2⅝"ϕ		S
6	L33 Ells for R1,2,4+5		S
2	Caps for R1+2		S
2	Nipples - 0'-6⅝ for R1+2		S

NOTES:
MATERIAL: O. H. Steel Card 855
SPECIFICATIONS: Maine State Highway Commission
INSPECTION: P. T. L.
ERECTION: A. B. Co.

RIVETS
OPEN HOLES

State of Maine
Maine Kennebec Bridge
over Kennebec River
between
Richmond & Dresden

AMERICAN BRIDGE CO.
AMBRIDGE PLANT
Dwgs. made at Ambridge No. 3 in charge of Nichols
Detailed by MBA Date 11/26/30 Checked by H.M. Date 12/9/30
Fin. comp. chk. by TH Date 12-22-30
ORDER NO. G3822-S SHEET NO. 22

Rev. 2-4-31 E&N.

13-90

0 1 2 3 4 5 INCHES

	STYLE BOLT	NO REQ'D	DIA. OF HOLE	DIA. OF BOLT	DIA OF THREAD	S	T	L	NO OF HEX NUTS EACH	NO OF WASHERS OR STYLE OF WASHER		REMARKS
Shouldered Turned Bolt (Dia. for reamed hole) TYPE - A	A	6	1 1/16		1	3 7/16	2 15/16	6 1/2	2	3	X	Light driving fit - MB2 to MM1
	D	4		1/2			1	1 3/4	1	1	V	Limit Switch to MA26
	A	2	13/16		3/4	2 3/4	2 1/4	5	2	3	X	MB6 to L13L14C
	B	2	11/16		5/8	1 5/8	1 1/8	2 3/4	1	1	V	MA25 to ML25 & ML26
	A	2	15/16		7/8	14 1/2	2 1/4	16 3/4	2	3	X	MB6 to L13L14C
	B	2	11/16		5/8	2 5/16	1 3/16	3 1/2	1	1	V	MB25 to MM9
	A	8	15/16		7/8	2 5/16	2 1/16	5 3/4	2	3	X	MB9 to S18 & 19
Shouldered Turned Bolt (Dia. for reamed hole) TYPE - B	F	2		1/2			1	2	1	1	V	Limit Switch to MM9
	B	22	1 1/32	1	3/4	1 9/16	1 1/16	3 1/4	1	1	V	MW5 to MM21-31 Special Td. Bolt F1N. under Sched. HL
	F	2		1/2			1	3	1	1	V	Limit Switch to MM9
	A	8	13/16		3/4	2 1/4	2 1/2	4 3/4	2	3	X	MB8 to MM20
	F	4		5/8			1 1/4	2 1/2	1	1	V	Wedge Motor to MM16
Turned Bolt TYPE - C	B	24	1 3/16		1 1/8	4 3/8	1 5/8	6	1	1	V	MG1 to MG1 Sh. 1
	F	4		7/8			1 3/4	3 1/4	1	1	V	Turning Motor to MM5
	D	8		5/8			1 1/4	8 1/2	1	–	–	MC10 & 10A to Floor
	A	3	11/16	5/8	1 1/8	1 3/8	3	2	2	X		MA26 to Stringer S25
	A	3	11/16	5/8	1 3/8	1 7/8	3 5/8	2	2	X		MB26 to MA26 to Stringer S25
		8	O.G Washers for 5/8" Bolt Patt. A91									MC10 & 10A to Floor
		16	Cap Screws 3/4" x 1/2 U.H.H.									RS1 to MC4
Machine Bolt (Dia. L T L) TypeF-Hx. Hd TypeD-Csk. Hd	F	8		3/4			1 1/2	2 3/4	1	–	–	RS1 to MC4
		22	Verona Nut Locks for 1" Bolts - Type V									
		25	" " " "					1 1/4"	"	"		
		4	" " " "					5/8"	"	"		
		4	" " " "					7/8"	"	"		
Standard Washer TYPE - X		20	Std. Washers - 2 1/4 x 1/4 - 1 3/16" Holes - Type X									
		40	" " 2 1/4 x 1/4 - 15/16" " " "									
		25	" " 2 1/4 x 1/4 - 1 1/16" " " "									
		15	" " 2 1/4 x 1/4 - 13/16" " " "									
Verona Nut Lock TYPE - V		8	Verona Nut Locks for 1/2" Bolts - Type V									
		4	" " " "					3/4"	"	"		
Standard Bevel Washer TYPE - P		2	Pencoyd Beveled Washers for 3/4" Bolts - Type P									
		2	" " " "					1/2"	"	"		

Summary of Washers & Verona Nut Locks & Pencoyd Washers

Field Bolts for Machinery

LINE	NO. PCS.	DIAM	RIVETS		BOLTS: LENGTH UNDER HEAD	HEAD	NUT	WASHER	TYPE OF BOLT	REMARKS
1	15	7/8	6 3/4							
2	25	"	6 1/2							
3	40	"	4 5/8							
4	15	"	3 7/8							
5	25	"	3 5/8							
6	90	"	3 1/2							
7	260	"	3 1/4							
8	270	"	3 1/8							
9	370	"	2 7/8							
10	940	"	2 3/4							
11	910	"	2 5/8							
12	1230	"	2 1/2							
13	1160	"	2 3/8							
14	1200	"	2 1/4							
15	80	"	2 1/8							
16										
17										
18	30	3/4	3							
19	50	"	2 3/4							
20	100	"	2 5/8							
21	30	"	2 3/8							
22	40	"	2 1/4							
23	670	"	2 1/8							
24	310	"	2							
25										
26										
27	40	5/8	2 1/2							
28	50	5/8	2							
29										
30										
31	25	7/8			2 3/4	H	H		Ordinary	
32	35	3/4			2	"	"		"	
33	10	5/8			2	"	"		"	
34										
35										
36										
37	52	Swedge Bolts - A1 - 1 1/4" x 1'-2								
38	4	" " - A2 - 1" x 1'-1 1/2								
39	8	" " - A3 - 1 1/4" x 1'-0 1/2								
40	12	" " - A4 - 3/4" x 10 1/2								
41										
42										
43										
44										
45	60	Std. Hex Nuts - 1 1/4" Tap								
46	4	" " " 1" "								
47	12	" " " 3/4" "								
48										
49	60	Washers - 2 1/2" x 3/8 - 1 5/16" Hole								
50	4	" - 2 1/2" x 3/8 - 1 1/16" Hole								
51	12	" - 2 1/4" x 1/4 - 13/16" Hole								
52										

Nuts & washers for above swedge bolts.

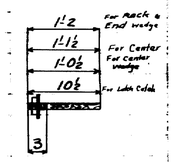

State of Maine
Maine Kennebec Bridge
over Kennebec River
between
Richmond & Dresden

AMERICAN BRIDGE CO.
AMBRIDGE PLANT

Dwgs. made at Ambridge No. 3 in charge of Nichols
Detailed by T.W.H Date | Checked by ECN Date 1/20/31
Fin. corr. ckd. by | Date
ORDER NO. G3822-S | SHEET NO. 23

13-11

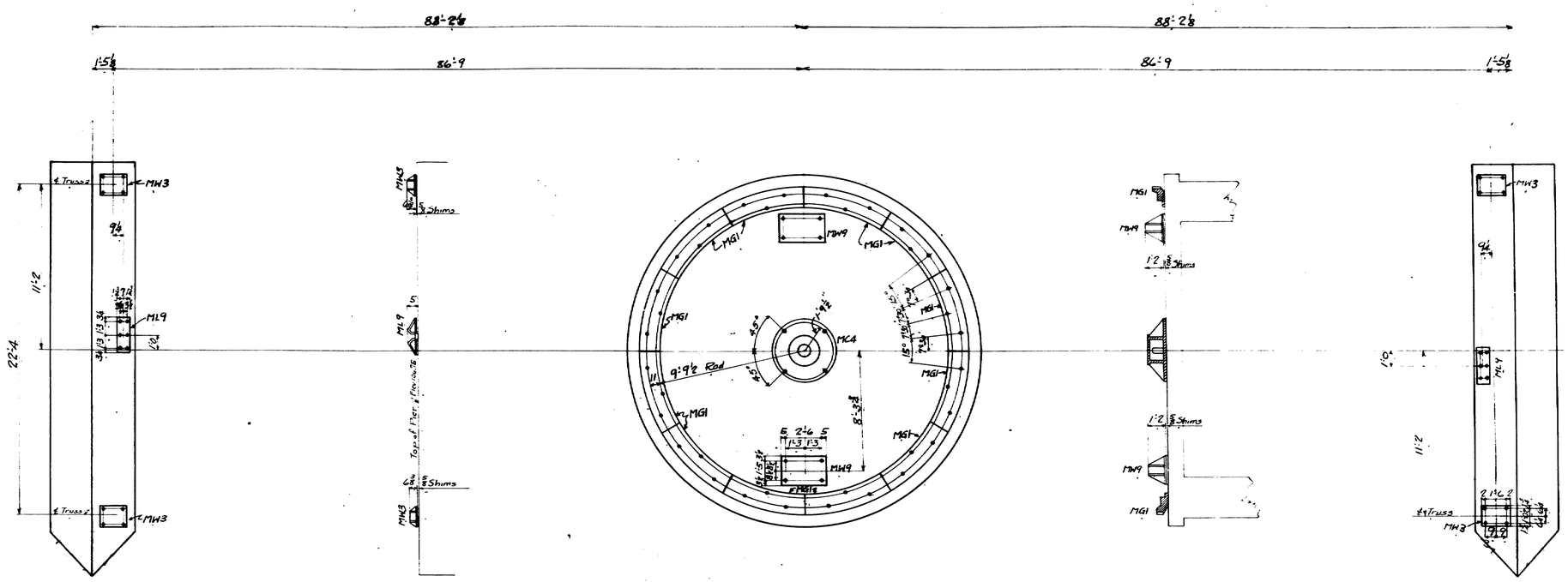

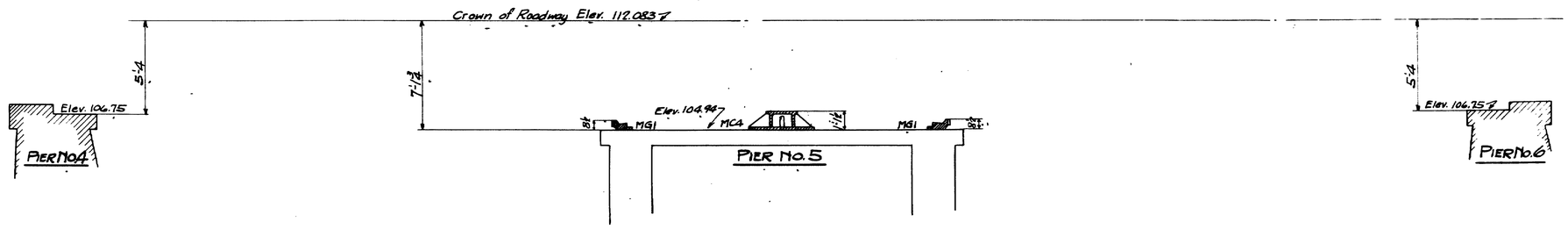

State of Maine
Maine Kennebec Bridge
over Kennebec River
between
Richmond & Dresden

AMERICAN BRIDGE, CO.
AMBRIDGE PLANT

Dwgs. made at Ambridge No. 3 in charge of Fitch
Detailed by DMD Date 11/24/36 Checked by WFR Date 12-17-36
Fld. connchk. by Date
ORDER NO. G3823M SHEET NO. E1

0 1 2 3 4 5 INCHES

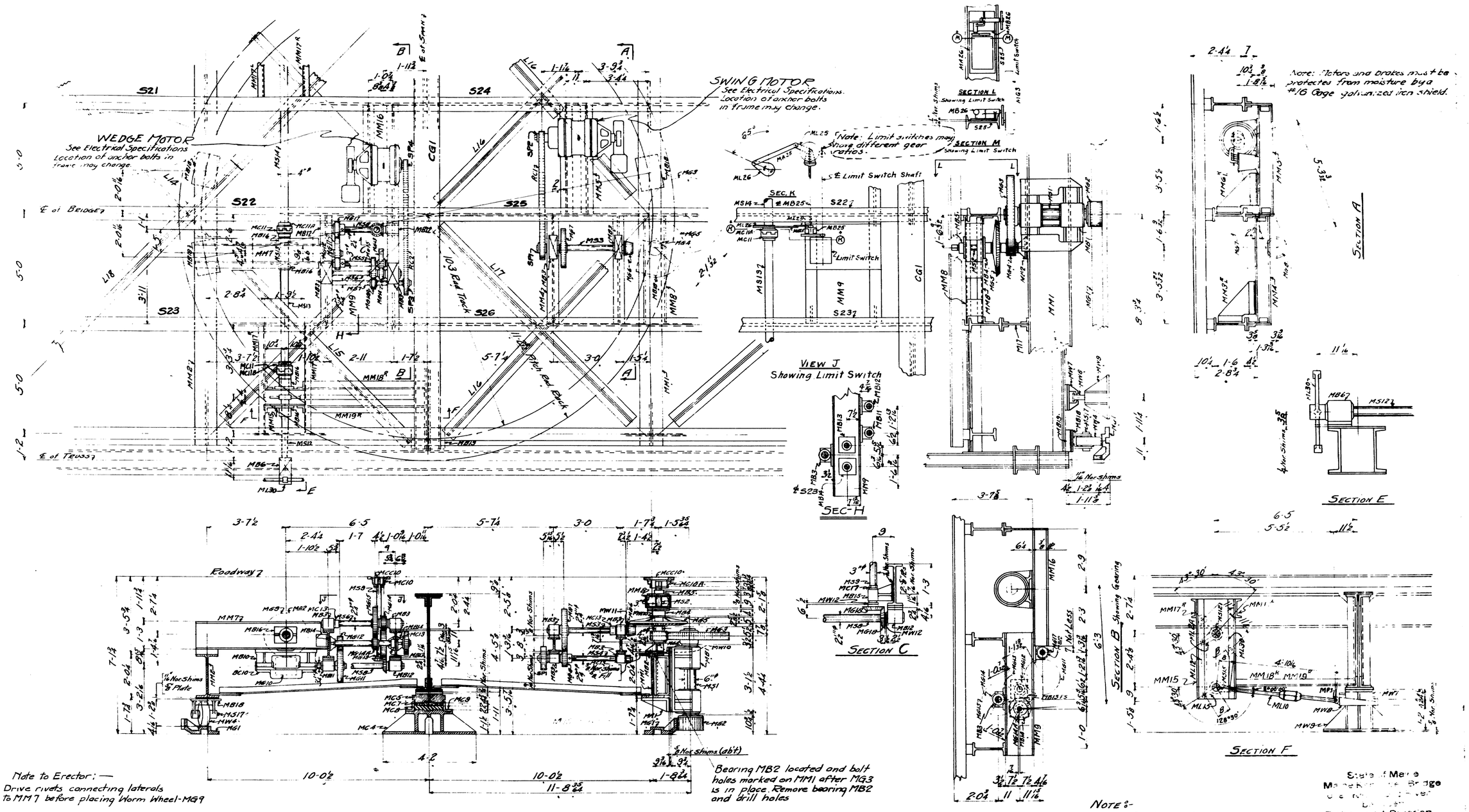

Note to Erector:—
Drive rivets connecting laterals to MM7 before placing Worm Wheel-MG9

Bearing MB2 located and bolt holes marked on MM1 after MG3 is in place. Remove bearing MB2 and drill holes

For location & marks of shims see sheet #21 Order G3822

NOTE:-
Center wedge guide and seat sym. about ℄ of Span.

State of Maine
Maine Knox Bridge
Over Kennebec River
Richmond & Dresden

AMERICAN BRIDGE CO.
AMBRIDGE PLANT
Dwgs. made at Ambridge N.J. Reehl
Detailed by MAR Date
Checked by NFR Date 12-4-30
Fin. conn. Chk. by
Date
ORDER NO. G3323
SHEET NO. 27

(61)

13-93

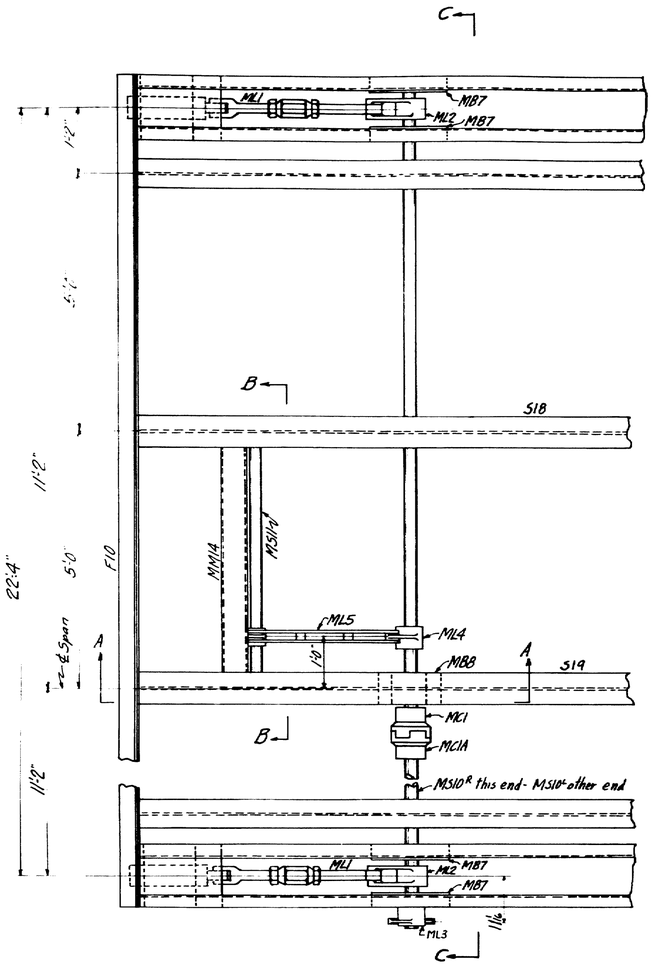

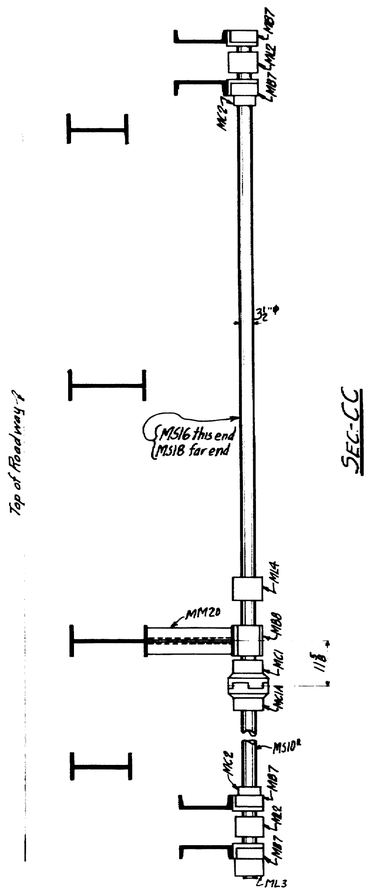

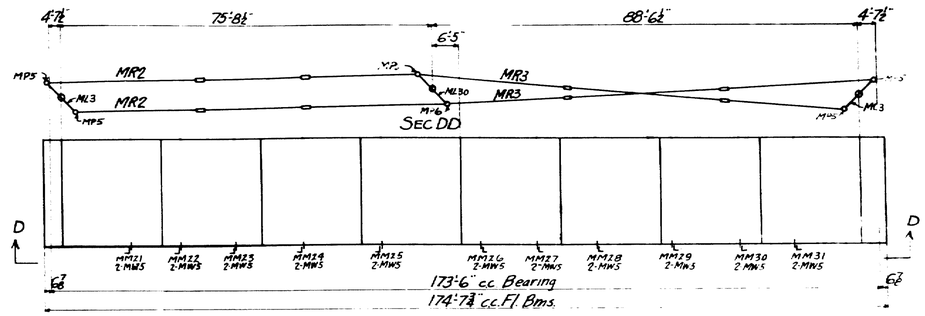

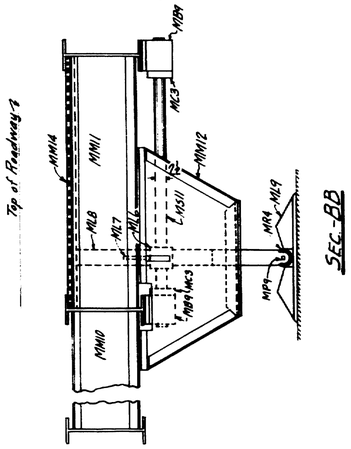

TABLE OF TURNING GEARS

Mark	No. of Teeth	Pitch	PD	Face	Bore	Remarks
MG1	300	2½ C.P.	224⅜	6		Use 12 segments Rack at 25 teeth.
MG2	14	2½ C.P.	12.32	6⅞	6	Shrouded
MG3	96	1½ C.P.	42.32	4	5¾	
MG4	15	1½ C.P.	8.32	4⅜	4	
MG5	63	2 D.P.	31.5	4	4	Bevel Gear
MG6	14	2 D.P.	7.0	4	2¾	Bevel Pinion
MG7	56	2½ D.P.	22.4	3	2¾	
MG8	20	2½ D.P.	8.0	3	2¾	

TABLE OF WEDGE DRIVING GEARS

Mark	No. of Teeth	Pitch	PD	Face	Bore	Remarks
MG9	24	3¼ C.P.	24⅜		4	Worm Wheel
MG10		3¼ C.P.	8.0			Worm
MG11	48	2½ D.P.	19.2	3	3¼	
MG12	20	2½ D.P.	8.0	3	3	
MG13	43	2½ D.P.	17.2	3	3	
MG14	18	2½ D.P.	7.2	3	2¾	
MG15	43	2½ D.P.	17.2	2¾	2¾	
MG14A	18	2½ D.P.	7.2	3	2¾	
MG17	26	2½ D.P.	10.4	3	2½	
MG18	20	2½ D.P.	8.0	2	2½	Bevel Gear

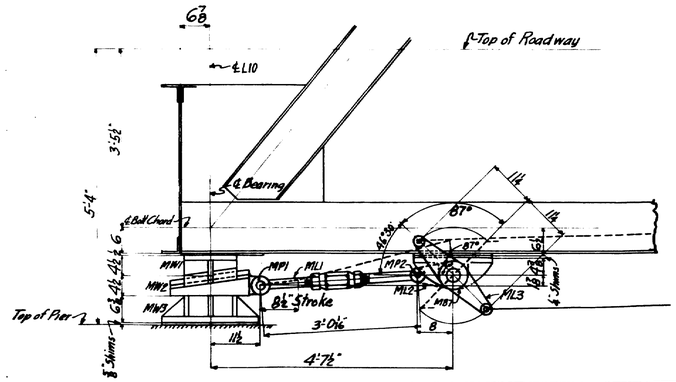

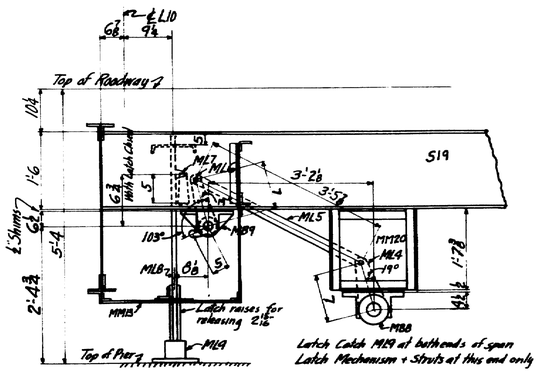

D.L. Deflection = 0.1254
Temp. Deflection = 0.1746
Span Tip = 0.5399
Min. clearance of Wedge from seat = 7⅛"

State of Maine
Maine Kennebec Bridge
over Kennebec River
between
Richmond & Dresden

AMERICAN BRIDGE CO.
AMBRIDGE PLANT

Dwgs. made at Ambridge No. 3 in charge of Reehl
Detailed by W.R. Date 11-10-30 Checked by J.S.S. Date 12-23-30
Fin. conn. chk. by Date
ORDER NO. G3823 SHEET NO. E3

13-9

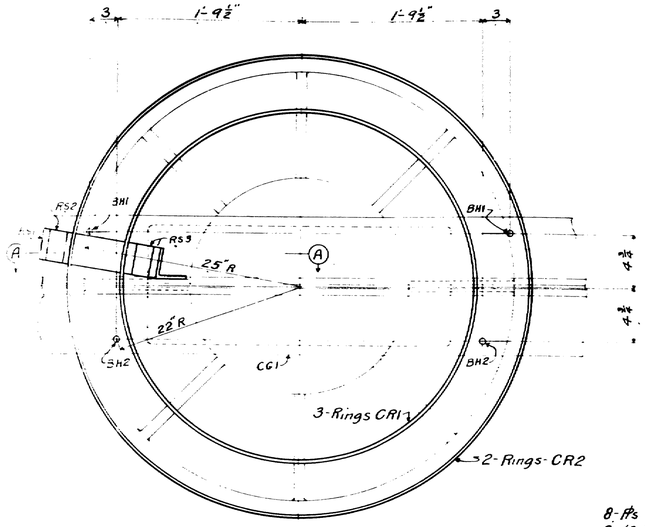

NOTE:- Ring Supports as shown on all ribs of Center.

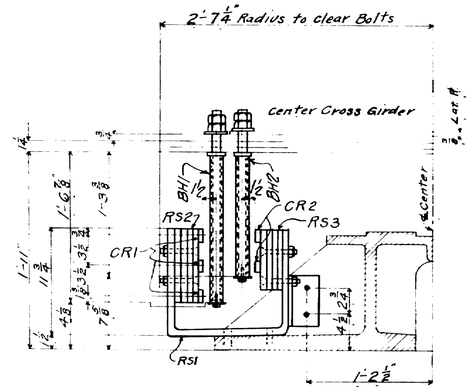

SECTION AA

ERECTION DRAWING OF COLLECTOR RINGS

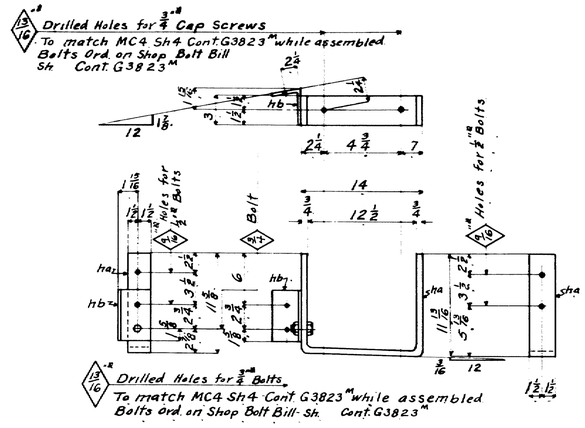

8-RING SUPPORTS-RS1

8-Pls 3 x ⅜ x 3'-0" - ha Bent - Item No. S
8-L's 3½ x 3½ x ⅜ x 0'-6" - hb Bent - Item No. S
8-¾" Bolts 2¼" lg. S

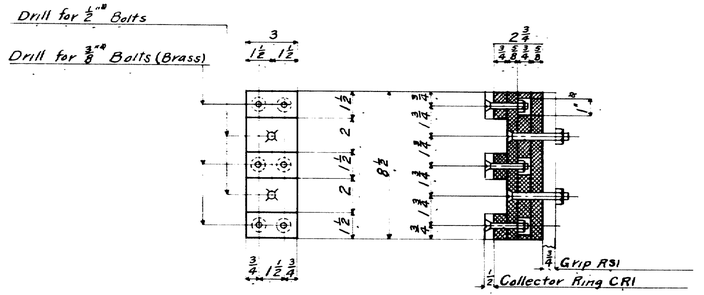

8-RING SUPPORTS-RS2

Ebony Wood built up as shown - Req# 1349 Amb.
48-⅜" Brass Bolts 2½" lg. Csk. Hd. & H.N. - Req# 1346 Amb.
16-½" Bolts 3½" lg. Csk Hd. & H.N. - Req# 1347 Amb.
16-Verona Nut Locks for ½" Bolts. Req# S.

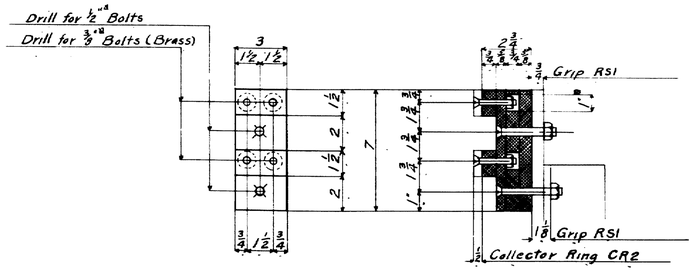

8-RING SUPPORTS-RS3

Ebony Wood built up as shown	Req# 1349 Amb.
32-⅜" Brass Bolts 2½" lg. Csk. Hd. & H.N.	Req# 1346 Amb.
8-½" Bolts 3½" lg. Csk. Hd. & H.N.	Req# 1347 Amb.
8-½" Bolts 4" lg. Csk. Hd. & H.N.	Req# 1347 Amb.
16-Verona Nut Locks for ½" Bolt	Req# S.

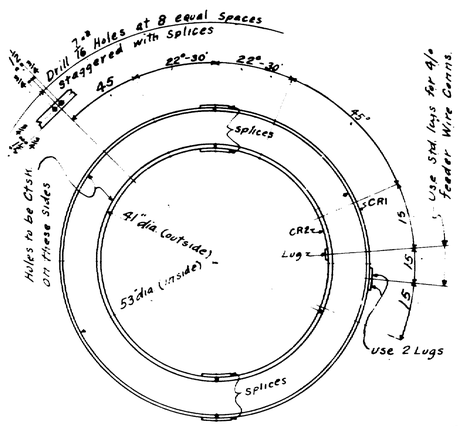

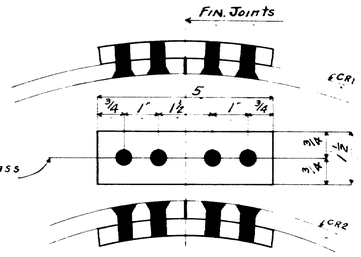

5-COLLECTOR RINGS-3CR1, 2CR2

6-Brass Bars 1½ x ½ x 7'-0 5/32" - For CR1	Req# 1348 Amb
4-Brass Bars 1½ x ½ x 5'-3⅜" - For CR2	Req# 1348 Amb
8-Terminal Lugs for 4/0 Wire	Req# 1345 Amb
10-Brass Splice Bars 1½ x ½ x 5 Bent	Req# 1348 Amb
40-⅜" Brass Bolts 1½" lg. Csk. Hd. & H.N	Req# 1347 Amb

10 Clock Spring (CS) Brush Holders and Carbon brushes - General Electric Co. Fig. 65, - Dr. No. 182922; Gr. No. 4, - Brush ¼ x ¼ x 2½ Bore ¼". (Ship Boxed)
Req. No. 1366 Amb

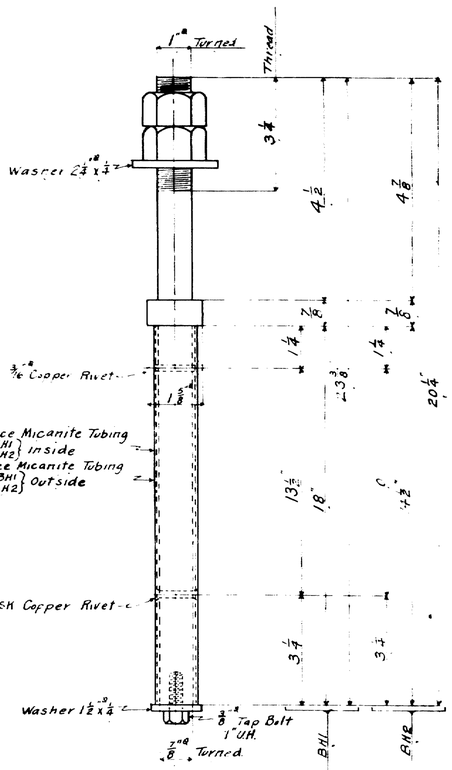

4-BRUSH HOLDERS-2BH1-2BH2

2-1⅜" Bars 23⅜" lg.	Item# S
2-Pcs. Round Micanite Tubing I.D. 27/64, O.D. 1 3/64 - 18 lg. - ma	for BH1 Req# 1350 Amb
2-Pcs. Round Micanite Tubing I.D. 1⅛", O.D. 1¼" - 18 lg. - mb	Req# 1350 Amb
8-1" Std. Hex. Nuts	Item# S
4-Washers 2½" x ¼ x 1/16" Hole	Item# S
4-Washers 1½" x ¼ - 7/16" Hole	Item# S
4-⅜" Tap Bolts 1" U.H.	Req# S
4-7/16" Copper Rivets 1 ¾" B.H.	Req# 1346 Amb
4-7/16" Copper Rivets 1 ¾" CSK H.	Req# 1346 Amb
2-1⅜" Bars 20 5/16" lg.	Item# S
2-Pcs. Round Micanite Tubing I.D. 27/64, O.D. 1 3/64 - 14½ lg. - mc	for BH2 Req# 1350 Amb
2-Pcs. Round Micanite Tubing I.D. 1 1/16", O.D. 1¼ - 14½ lg. - md	Req# 1350 Amb

NOTES:
MATERIAL: O. H. Steel Card 855
SPECIFICATIONS: Maine State Highway Commission
INSPECTION: P. T. L.
ERECTION: A. B. Co.

RIVETS
OPEN HOLES

State of Maine
Maine Kennebec Bridge
over Kennebec River
between
Richmond & Dresden

AMERICAN BRIDGE CO.
AMBRIDGE PLANT
Dwgs. made at Ambridge No. 3 in charge of Reehl
Detailed by LDB Date 12-20-39 Checked by [illegible] Date 12-21-45
Fld. conn. chk. by Date
ORDER NO. G3823-X1 SHEET NO. 1

13-95

H. A. R. R. A. N. D. W. E. L. L.
LDB 6 8 3 15

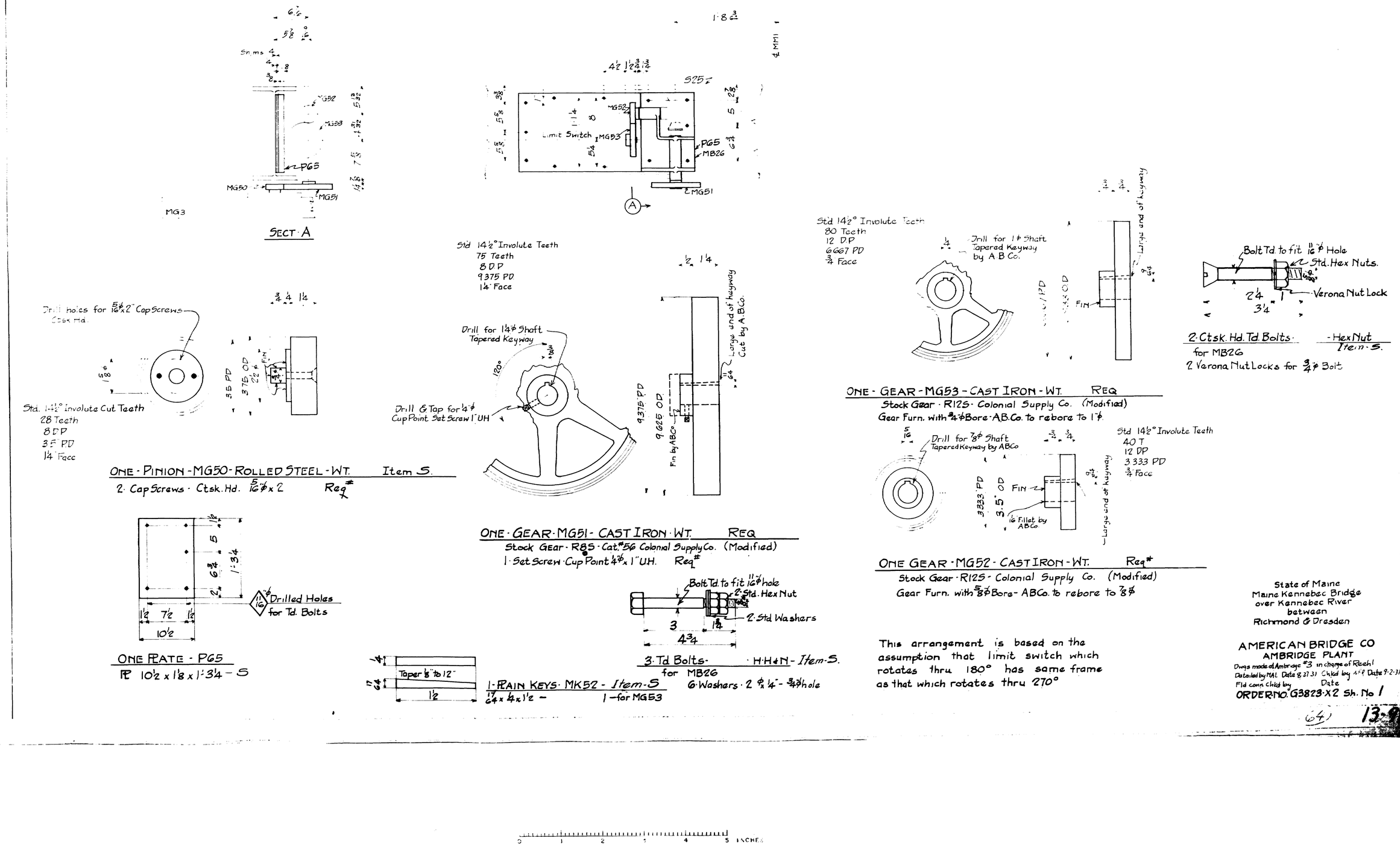

ONE - PINION - MG50 - ROLLED STEEL - WT. Item S.
2 Cap Screws - Ctsk. Hd. 5/16"ø x 2 Req#

ONE - GEAR - MG51 - CAST IRON - WT. REQ
Stock Gear - R8S - Cat. #56 Colonial Supply Co. (Modified)
1 Set Screw - Cup Point ¼"ø x 1" UH. Req#

ONE - GEAR - MG53 - CAST IRON - WT. REQ
Stock Gear - R12S - Colonial Supply Co. (Modified)
Gear Furn. with ¾"ø Bore - A.B.Co. to rebore to 1"ø

ONE GEAR - MG52 - CAST IRON - WT. Req#
Stock Gear - R12S - Colonial Supply Co. (Modified)
Gear Furn. with ⅝"ø Bore - ABCo. to rebore to ⅞"ø

ONE PLATE - P65
PL 10½ x 1⅛ x 1'-3¼ - S

1 - PLAIN KEYS - MK52 - Item-S
17/64 x ¼ x 1½ - 1 - for MG53

3 Td Bolts - H.H.&N. - Item-S.
for MB26
6 Washers - 2 ⅝ x ¼" - ¾"ø hole

This arrangement is based on the assumption that limit switch which rotates thru 180° has same frame as that which rotates thru 270°

State of Maine
Maine Kennebec Bridge
over Kennebec River
between
Richmond & Dresden

AMERICAN BRIDGE CO
AMBRIDGE PLANT
Dwgs made at Ambridge #3 in charge of Reehl
Detailed by MAL Date 8-27-31 Chkd by AFP Date 9-2-31
Fld conn Chkd by Date
ORDER NO. G3823-X2 Sh. No 1

(64) 13-9

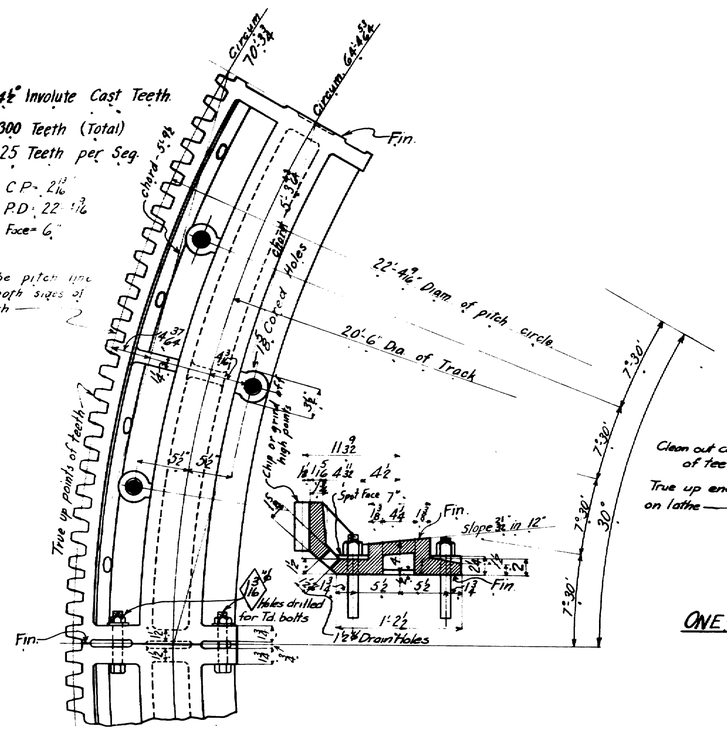

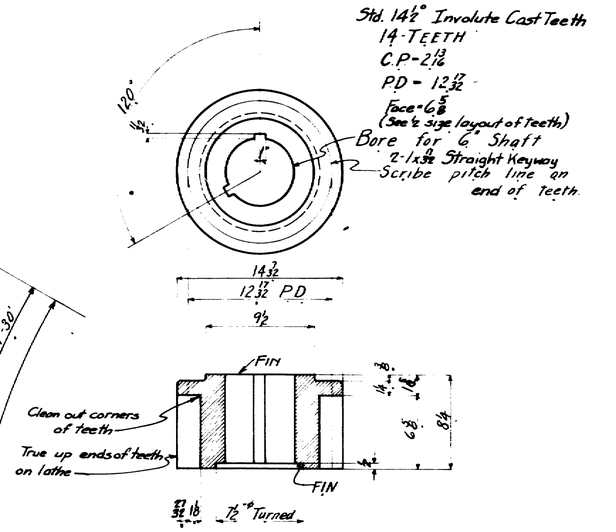

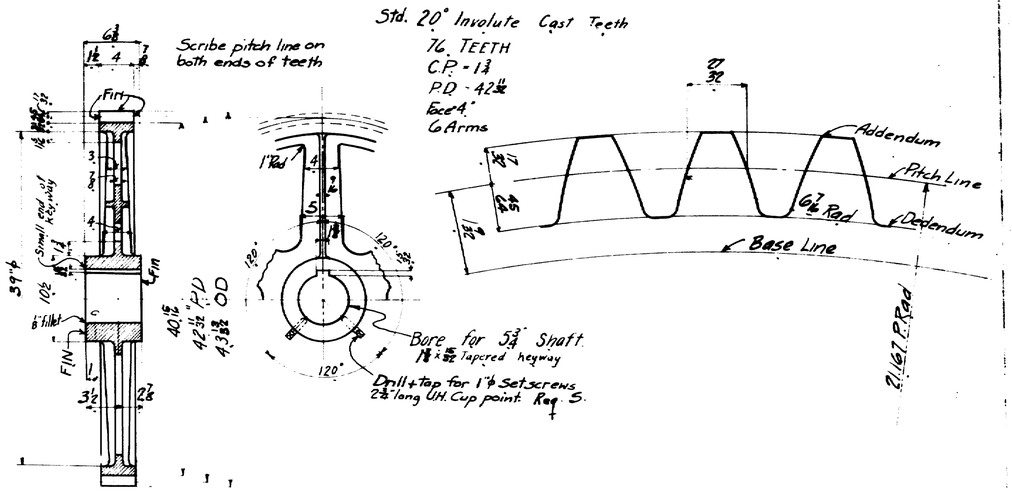

ONE - GEAR - MG3 - CAST STEEL PATT.# AA3148 chg'd WT. 600#

ONE - PINION - MG2 - CAST STEEL PATT.# AAG271A WT. 250#

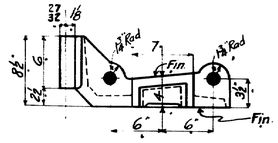

12 RACK SEGMENTS - MG1 - CAST STEEL PATT.# B273 chg'd WT. 1060#

Td Bolts for 1 1/2" Holes — HH & N - 6" U.H. - 2" THD. - WITH VERONA NUT LOCKS. Ordon Field Bolt & Bill Fl G3822

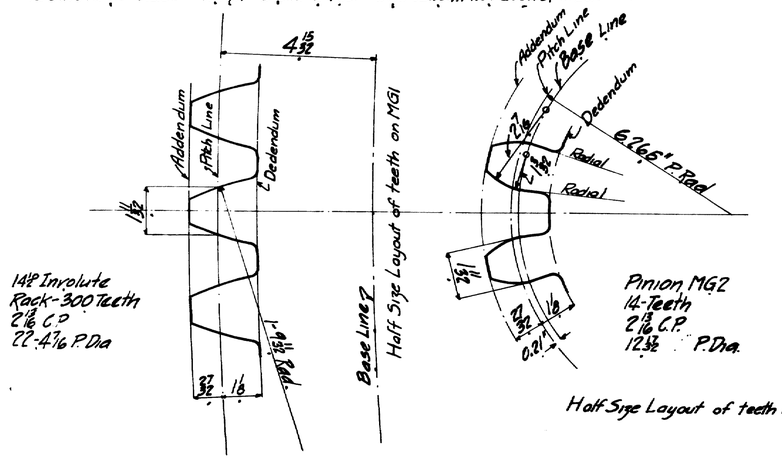

Half Size Layout of teeth of MG2

Std 20° Involute Cast Teeth
15 Teeth
C.P. = 1 3/4
P.D. = 8 11/32
Face = 4 3/8

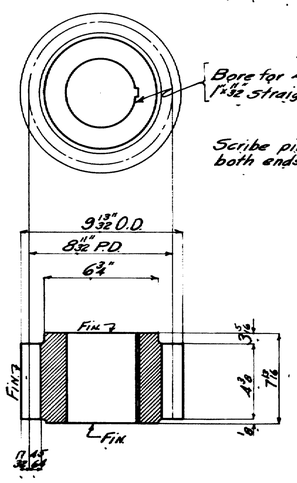

ONE - PINION - MG4 - CAST STEEL - PATT. NO. AA6272A WT. 95#

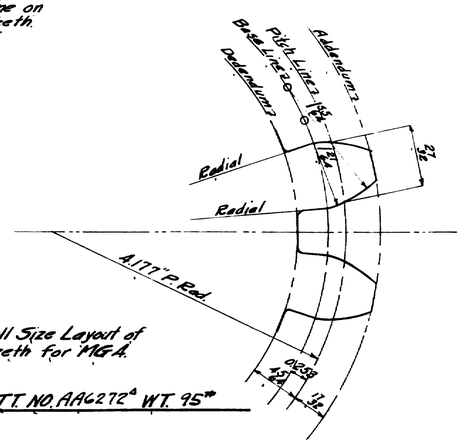

Full Size Layout of Teeth for MG4

Req. for Castings C.S. 2875

Note
All steel Castings to be Annealed
All finished surfaces To receive one coat of white lead and tallow

State of Maine
Maine Kennebec Bridge
over Kennebec River
between
Richmond & Dresden

AMERICAN BRIDGE CO.
AMBRIDGE PLANT
Dwgs. made at Ambridge No. 3 in charge of Reehl
Detailed by M.A.L. Date 11/3/30 Checked by W.F.A. Date 11-13-30
Fld. conn. chk. by Date
ORDER NO. G3823 SHEET NO. 1

0 1 2 3 4 5 INCHES

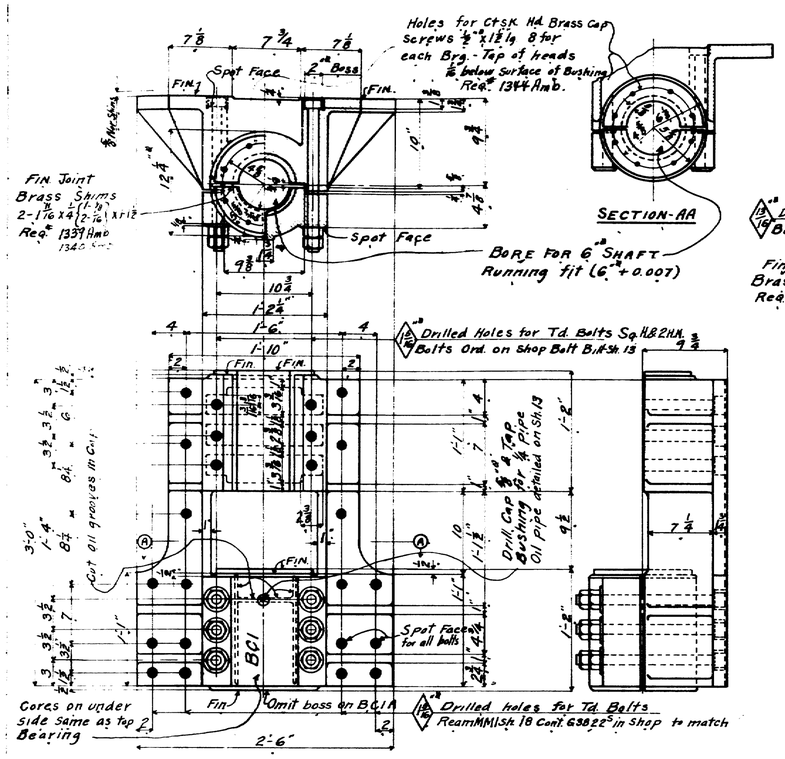

1-BEARING-MB1-CAST STEEL-PATT. No. AA6273A WT. 1300#

2-CAPS {1-BC1 / 1-BC1A} -CAST STEEL-PATT. No. B6271 chg'd. WT. 250#

4-HALF BUSHINGS-BB1-PHOS. BRONZE-GRADE "C"-PATT. No. AA6274A WT. 33#

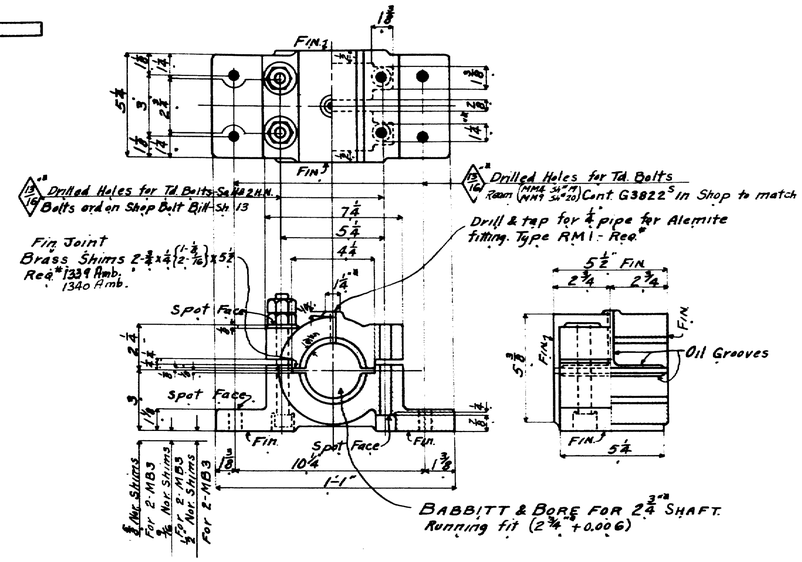

6-BEARINGS-MB3-CAST STEEL-PATT. No. AA6275A WT. 40#

6-CAPS CAST STEEL-PATT. No. AA6276A WT. 20#

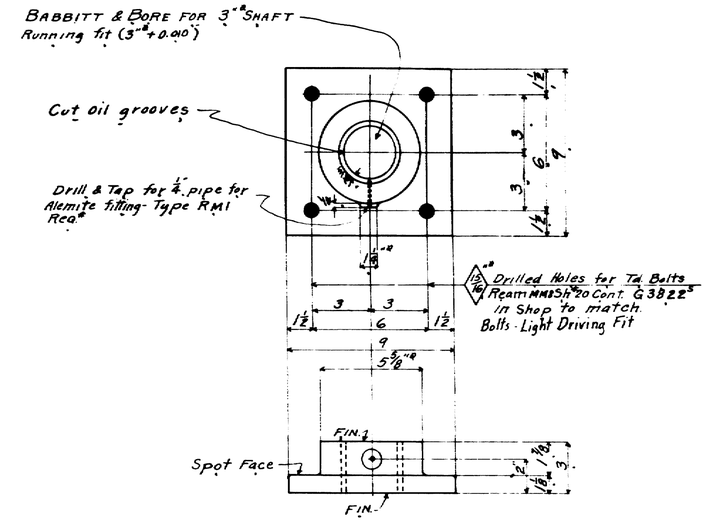

1-BEARING-MB5-CAST STEEL-PATT. No. AA6277A WT. 35#

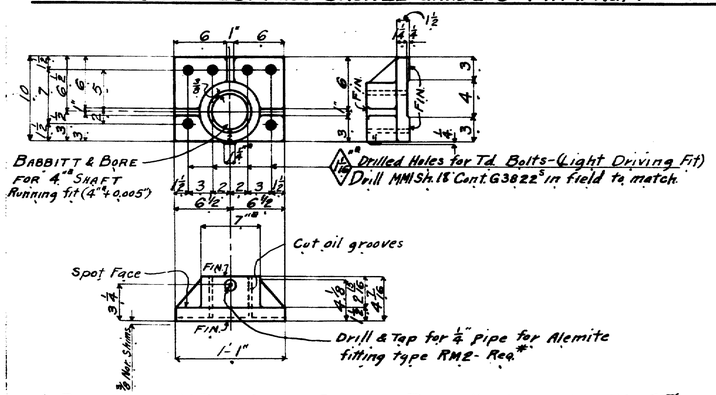

1-BEARING-MB2-CAST STEEL-PATT. No. AA6278A WT. 80#

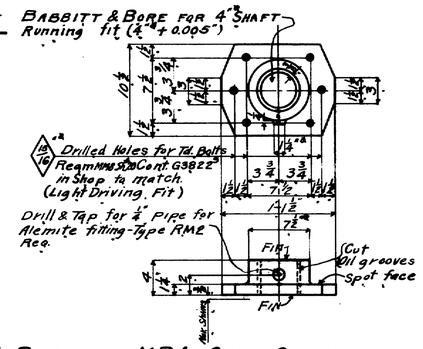

1-BEARING-MB4-CAST STEEL PATT. No. AA6279A WT. 75#

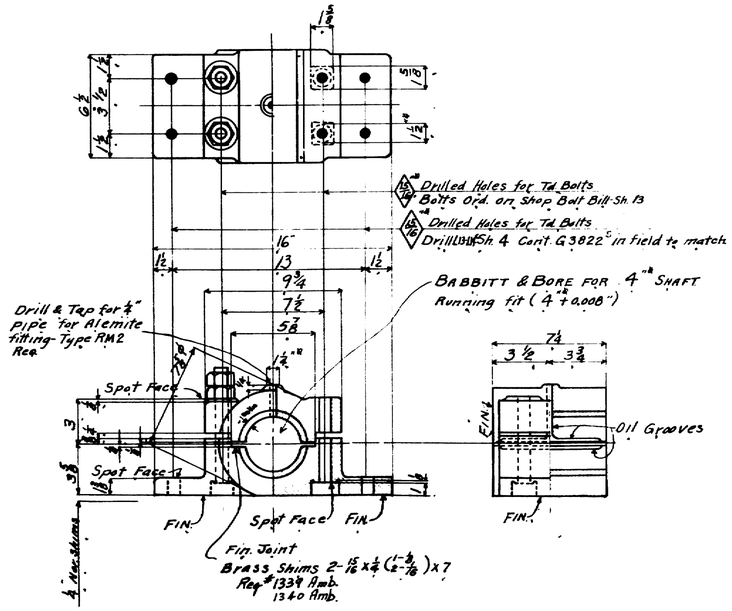

1-BEARING-MB6-CAST STEEL-PATT. No. AA6401 WT. 385#

1-CAP -CAST STEEL-PATT. No. AA6402 WT. 50#

REQ. No. FOR CAST STEEL {CS-2908 / CS-2875}

REQ. No. FOR PHOS. BRONZE CB-2177

NOTES:-

All Steel Castings to be Annealed.

All babbitt to be well Anchored with button Cores.

All oil grooves to be 1/4" wide and 1/8" deep, Corners to be well rounded, and grooves to be smooth.

Finished surfaces to have one coat of White Lead & Tallow.

State of Maine
Maine Kennebec Bridge
over Kennebec River
between
Richmond & Dresden

AMERICAN BRIDGE CO.
AMBRIDGE PLANT
Bwgs. made at Ambridge No. ... Ge of Reehl
Detailed by L.R.B. Date 11-17-30 Checked by H.F.R. Date 11-17-30
Fld. conn. chk. by Date
ORDER NO. G3823 SHEET NO. 2

0 1 2 3 4 5 INCHES

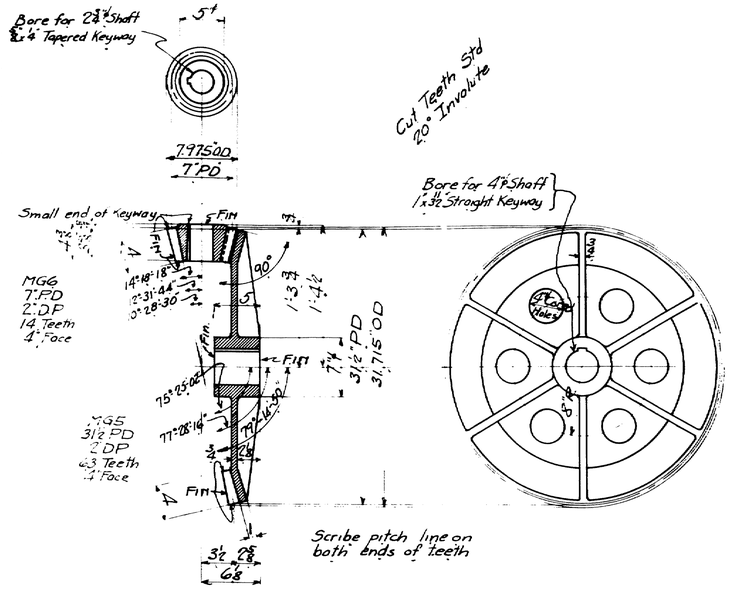

ONE BEVEL GEAR-MG5-CAST STEEL WT. 300# PATT NO. AA6282[a]
ONE BEVEL PINION-MG6-CAST STEEL WT. 30# PATT NO AA6283[a]

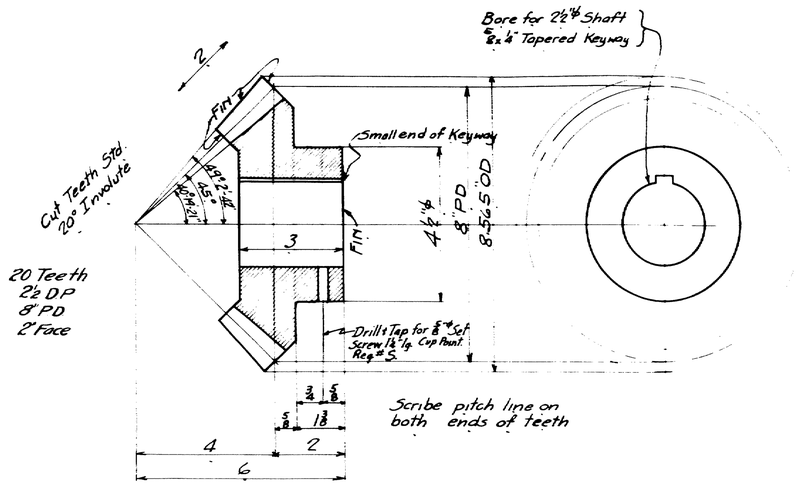

2- MITER GEARS MG18- FORGED STEEL WT 22# ITEM No 5

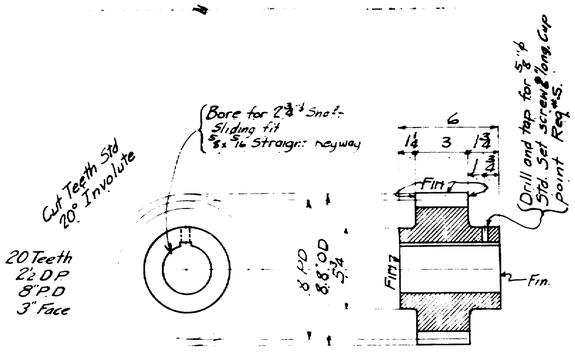

ONE PINION - MG8 - FORGED STEEL WT. 55# ITEM No 5

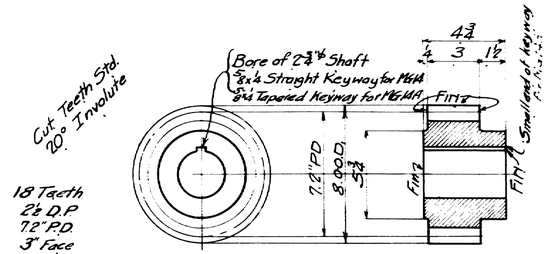

ONE PINION - MG14 - FORGED STEEL - WT. 40# ITEM No. 5
ONE PINION - MG14A - FORGED STEEL - WT. 40# ITEM No. 5

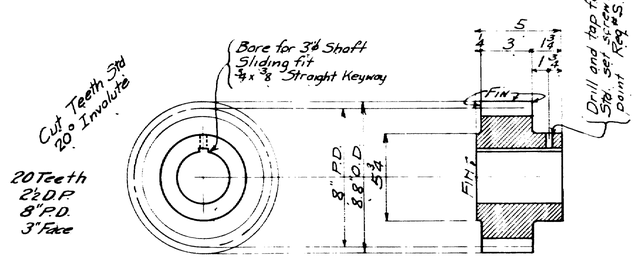

ONE PINION - MG12 - FORGED STEEL WT. 50# ITEM No. 5

TYPICAL GEAR - CAST STEEL

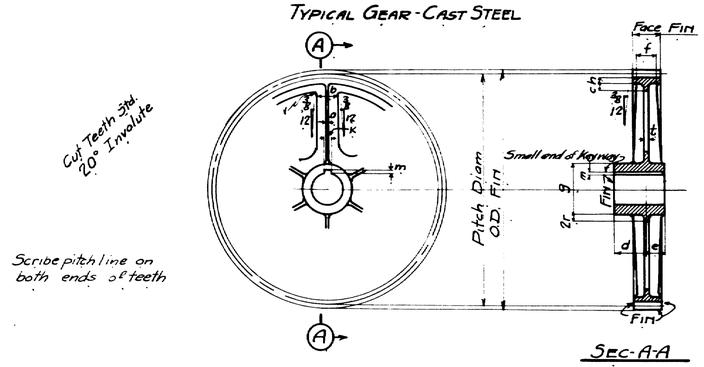

SEC-A-A

TABLE OF GEARS

No. Req.	Mark	No. of Teeth	Pitch DP	Pitch Dia.	Face	Fin Dia.	Shaft Dia.	a	b	c	d	e	f	g	h	K	m	r	t	No. of Keyways	Weight Fin.	Req. No.	Patt. No.
1.	MG7	56	2½	22.4	3	23.2	2 3/4	½	2 7/8	1	2 3/4	1 3/4	2 1/64	6 5/8	6 5/8	4	6 5/8	6 5/8		1	155		AA6284[a]
1.	MG11	48	2½	19.2	3	20.0	3 1/4	½	2 7/8	1	2½	1 3/4	2 1/64	6	6 5/8	4	9/32	6 5/8	6 5/8	1	125		AA6285[a]
1.	MG13	43	2½	17.2	3	18.0	3	½	2 7/8	1	1 3/4	2	2 5/64	5 3/8	5 3/4	3	9/32	5 5/8	5 5/8	1	110		AA6286[a]
1.	MG15	43	2½	17.2	2 3/4	18.0	2 3/4	½	2 7/8	1	1 3/4	1 3/4	2 5/64	5 3/8	6 5/8	4	6 5/8	6 5/8		1	110		AA6287[a]

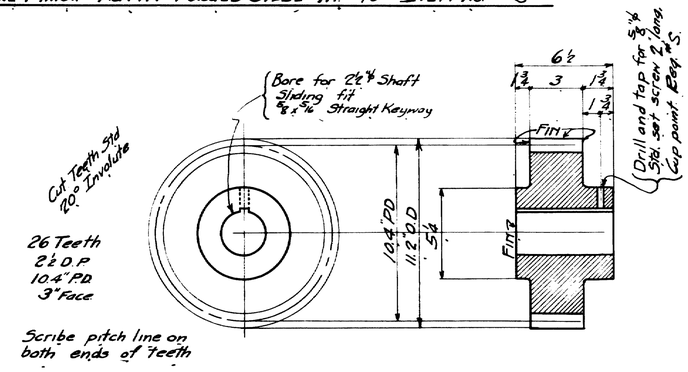

ONE PINION - MG17 - FORGED STEEL - WT. 85# ITEM No. 5

REQ. FOR STEEL CASTINGS - CS-2875

NOTE:-
All castings to be annealed
All finished surfaces to have
one coat of White Lead and
Tallow.

Forgings - Use Medium Steel Billets

Carbon	.25 To .30
Manganese	.40 to .60

GEARS

State of Maine
Maine Kennebec Bridge
over Kennebec River
Dwg. No. 8
Richmond & Dresden

AMERICAN BRIDGE CO.
AMBRIDGE PLANT
Dwgs. made at Ambridge, No. 3 Room Reehl
Detailed By GAR Date 11-18-30 Checked By W.K. Date 11-25-30
Fld. conn. chk. by Date
ORDER NO. G3823 SHEET NO. 3

13-99

0 1 2 3 4 5 INCHES

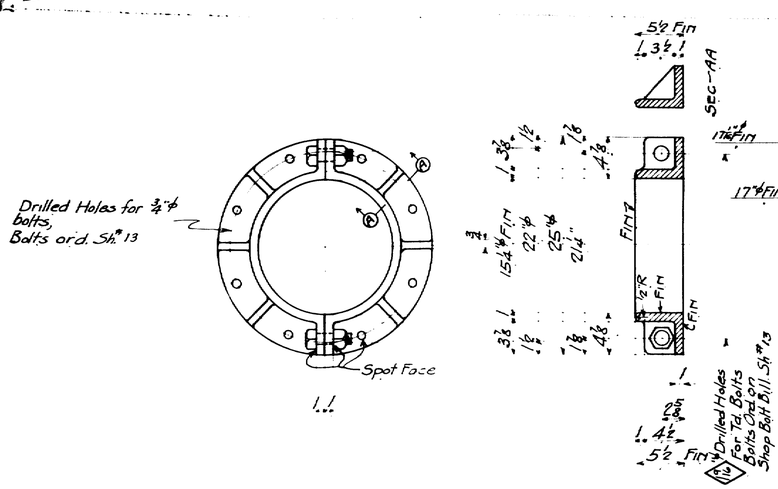

ONE OIL RING-MC9-(2-HALVES) CAST STEEL-PATT. No. A9853 WT. 200#

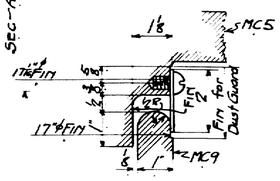

SEC BB

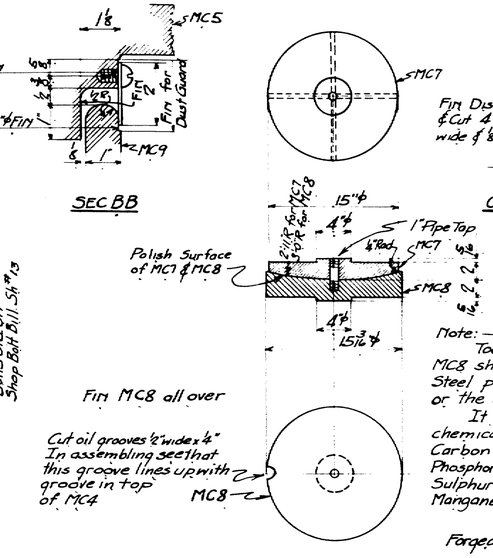

Note:—
Tool Steel for the Center Disc. MC8 shall be made from homogeneous Steel produced by the open hearth or the electric process.
It shall conform to the following chemical requirements

Carbon	.75 to 90
Phosphorus	.04 Max.
Sulphur	.04 Max.
Manganese	.40 to .60

Forged & Tempered

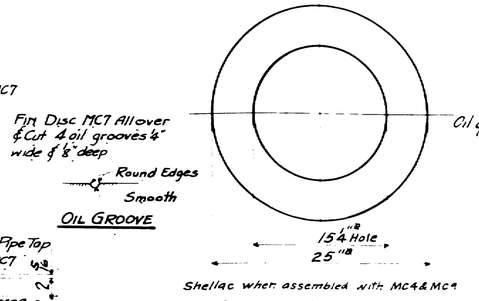

ONE 10 OZ. CANVAS GASKET-MA3
Req. #S.

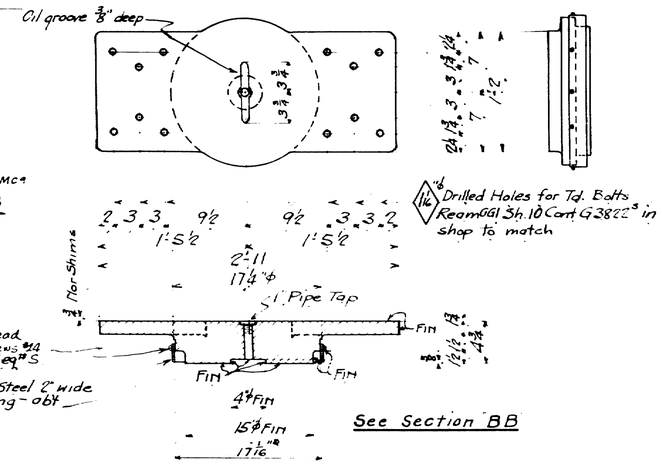

ONE TOP DISC-MC7-PHOS. BRONZE-GRADE "A"-PATT. No. A9854 WT. 110#
ONE BOTT DISC-MC8-TOOL STEEL-FORGING-WT. 120# ITEM # S
(MC8 must receive 50% reduction in forging)

ONE TOP CASTING-MC5-CAST STEEL-PATT. No. AA6292a WT. 470#

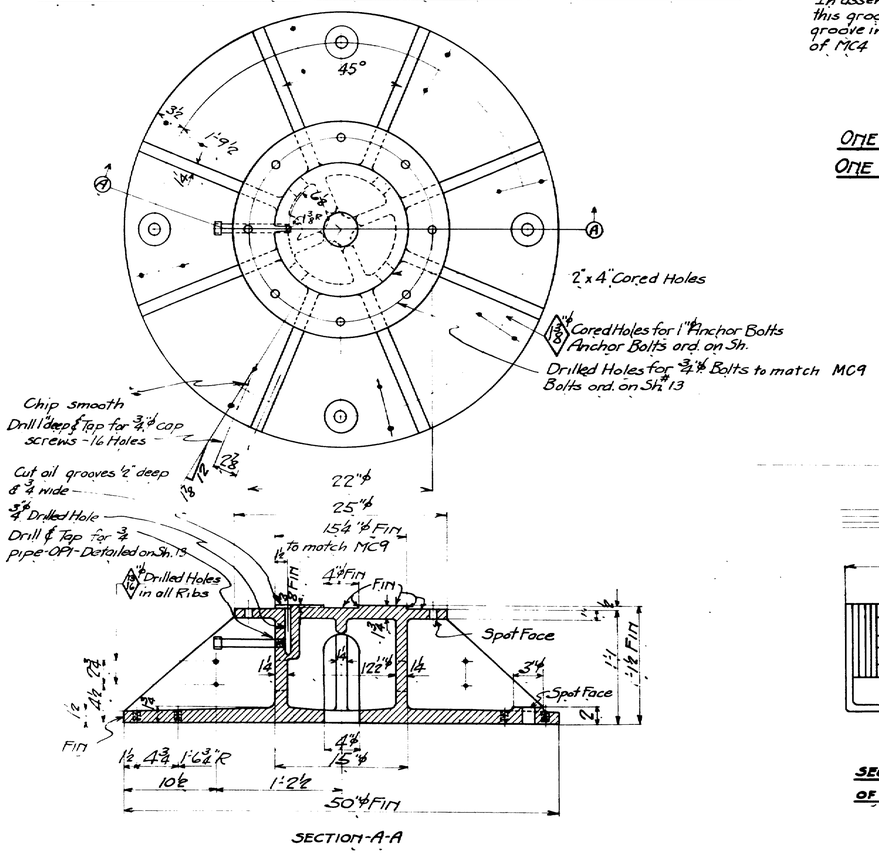

SECTION-A-A

ONE CENTER CASTING-MC4-CAST STEEL-PATT. No. A9852 WT. 2000#

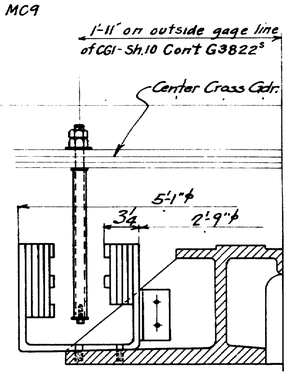

SECTION OF MC4 SHOWING METHOD OF ATTACHING COLLECTOR RINGS

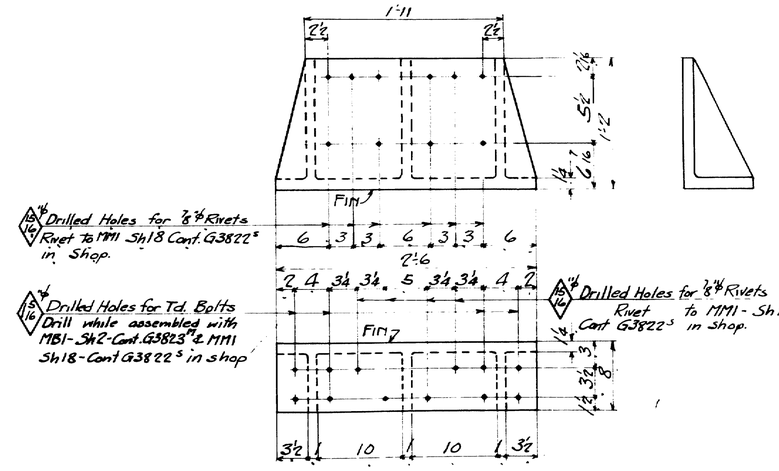

ONE BRACKET-MA1-CAST STEEL-PATT. No. AA6293a WT. 320#

REQ. No. FOR CAST STEEL — CS-2875
REQ. No. FOR PHOS. BRONZE — CB-2177

NOTES:
All Steel Castings to be Annealed.

Finished Surfaces to have one coat of White lead & Tallow

State of Maine
Maine Kennebec Bridge
over Kennebec River
between
Richmond & Dresden

AMERICAN BRIDGE CO.
AMBRIDGE PLANT
Dwgs. made at Ambridge Nu... Change of Reehl
Detailed by LDB Date 11-17-24 Checked by ... Date 1-25-6
Fld. conn. chk. by Date
ORDER NO. G3823 SHEET NO. 4
5 (68) 13-100

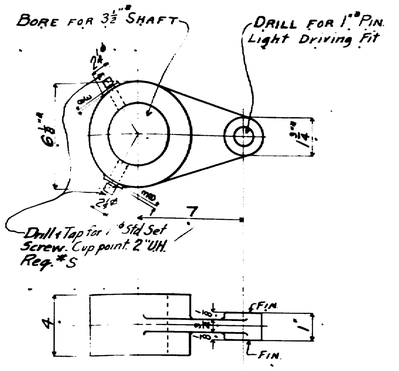

1-LEVER - ML 4 - CAST STEEL
PATT. NO. AA6317[a] WT. 28#

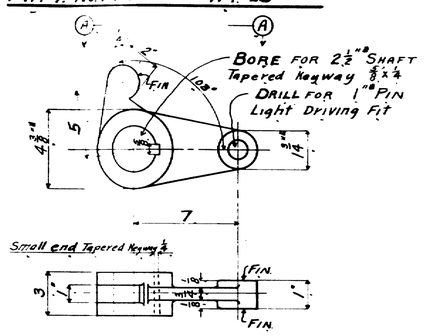

VIEW AA

1-LEVER - ML 6 - CAST STEEL
PATT. NO. AA6318[a] WT. 18#

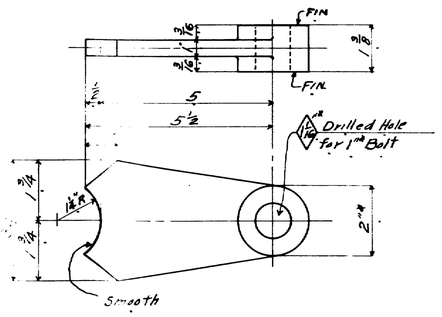

1-TRIP - ML 7 - CAST STEEL
PATT. NO AA6319[a] WT. 5#

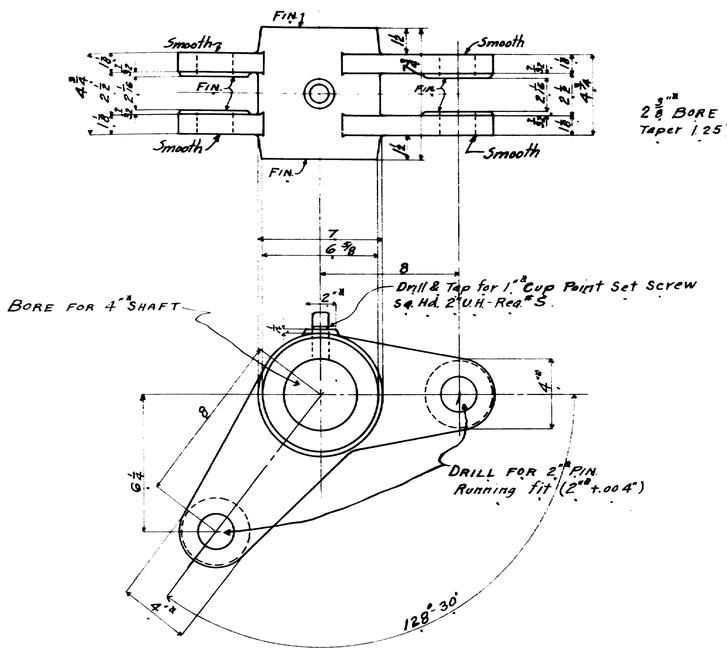

2-LEVERS - ML 15 - CAST STEEL - PATT. NO AA6320[a] Chad WT. 110# Req.# CS 2875-A
4 Pins MP7 - Ord. on Sh. 12.

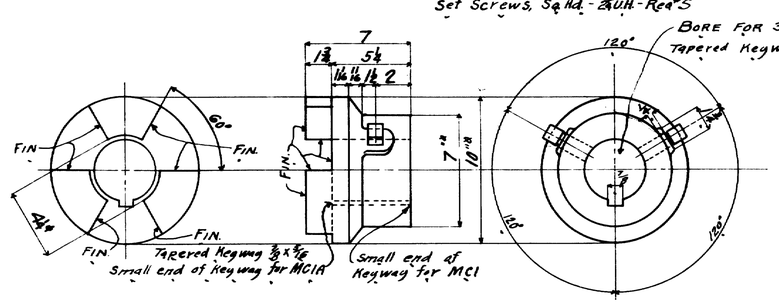

2-COUPLINGS - MCI - CAST STEEL
2-COUPLINGS - MCIA - CAST STEEL
PATT. No AA6321[a] WT. 80#
MCI & MCIA are mated Couplings
Keyways to be in Line when mated.

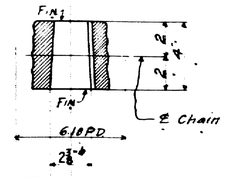

2⅜" BORE To FIT MOTOR SHAFT Taper 1/25 per ft. on Dia

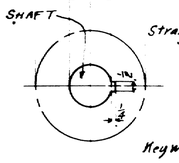

Keyway to be Cut by A.B.Co.

DRIVER
1-SPROCKET - SP2 - TYPE 2
19-Teeth - 6.10 P.D.
For 1" Pitch Chain 3" Wide
Ordered from Link Belt Co. - Req.# 1338 Amb.

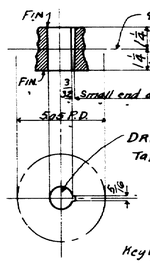

Keyway to be cut by A.B.Co.

DRIVER
1-SPROCKET - SP4 - TYPE 2
21-Teeth - 5.05 P.D.
For ¾ Pitch Chain 2" Wide
Ordered from Link Belt Co. Req.# 1338 Amb.

2-LINK BELT SILENT CHAINS

One Chain RC2	¾" Pitch - 2" Face Length of chain 181.832" 1 - Offset Coupler for above chain Ordered from Link Belt Co. - Req.# 1338 Amb.
One Chain RC1	1" Pitch 3" Face Length of chain 154.876" 1 - Offset Coupler for above chain Ordered from Link Belt Co. - Req.# 1338 Amb.

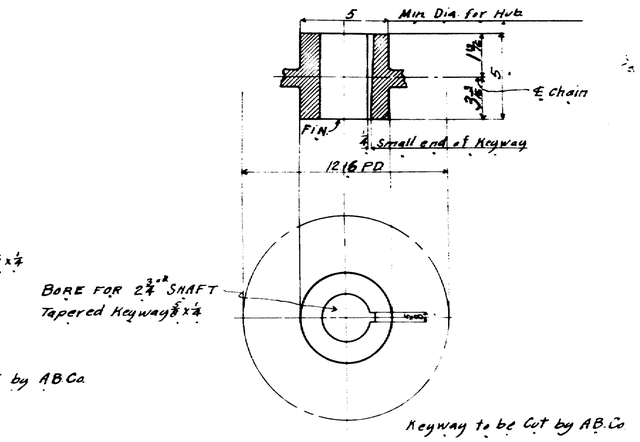

Keyway to be Cut by A.B.Co.

DRIVEN
1-SPROCKET - SP1 - TYPE 3
38-Teeth - 12.16 PD
For 1" Pitch Chain 3" Wide
Ordered from Link Belt Co. - Req. 1338 Amb.

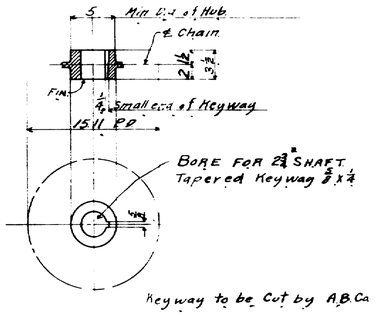

Keyway to be Cut by A.B.Co.

DRIVEN
1-SPROCKET - SP3 - TYPE 4
63-Teeth - 15.11 P.D.
For ¾ Pitch Chain 2" Wide
Ordered from Link Belt Co. - Req.# 1338 Amb.

REQ. No. FOR CAST STEEL CS-2875 Except as Noted

NOTES:-
All Steel Castings to be Annealed.
Finished Surfaces to have one Coat of White Lead & Tallow

State of Maine
Maine Kennebec Bridge
over Kennebec River
between
Richmond & Dresden

AMERICAN BRIDGE CO.
AMBRIDGE PLANT
Dwgs. made at Ambridge No. 3 in charge of Reehl
Detailed by LDB Date 12-8-30 Checked by WFR Date 12-9-30
Fld. conn. chk. by Date
ORDER NO. G3823[M] SHEET NO. 11

Rev 4-7-31

13-1006

0 1 2 3 4 5 INCHES

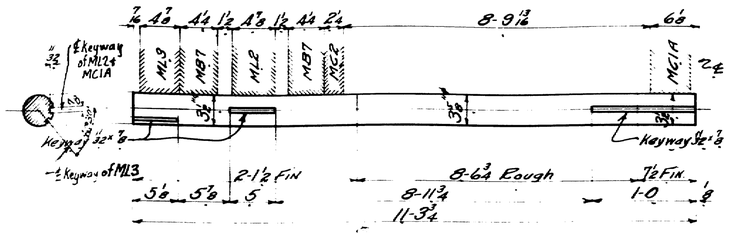

2-SHAFTS-MS10-ROLLED STEEL - ITEM 2
Shaft-3 7/8"ø x 11-3 3/4

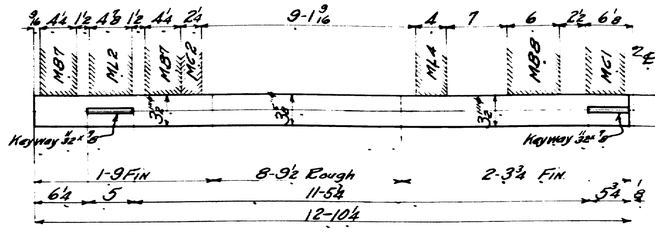

ONE SHAFT-MS16-ROLLED STEEL - ITEM 1
Shaft-3 7/8"ø x 12-10 1/4

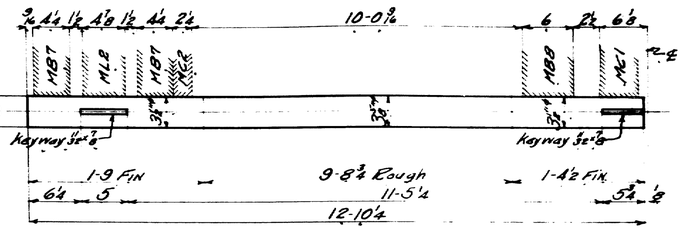

ONE SHAFT-MS18-ROLLED STEEL - ITEM 1
Shaft-3 7/8"ø x 12-10 1/4

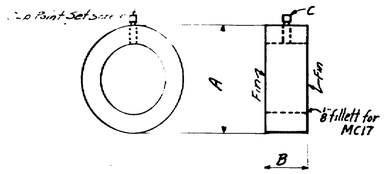

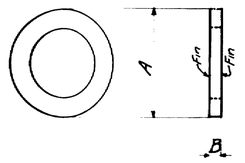

CAST STEEL COLLARS

No.	Mark	Shaft	A	B	C	Patt. No.	Req. for Collar	Req. for S. Screw	Weight
4	MC2	3 1/2	5 1/2	2 1/4	3/4"ø x 1 1/4	NT464	CS2876	S	9
2	MC3	2 1/2	4	1 1/2	1/2"ø x 1	NT462	CS2876	S	3
4	MC13	2 3/8	5	2 1/4	3/4"ø x 1 1/4	NT463	CS2876	S	7
1	MC14	4	6 1/4	2 1/2	7/8"ø x 1 1/4	NT465	CS2876	S	13
1	MC17	2 1/2	4	1 1/2	1/2"ø x 1	NT462	CS2876	S	3

PHOS. BRONZE WASHERS

No.	Mark	Shaft	A	B	Patt. No.	Req. No.	Weight
2	MW6	3 1/8	6	1/2		CB2177	
1	MW11	2 3/8	5	1/2		CB2177	
2	MW10	4	7	1/2	AAG327*	CB2177	4*
2	MW12	2 1/2	4 1/2	1/2		CB2177	

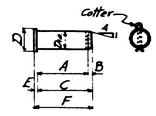

STEEL COTTER PINS

No. Reqd	Mark	Dia	A	B	C	D	E	F	Cotter	Shipped	Req. for Cotter	Item for Pins
4	MP1	2	5 1/16	1	6 1/16	2 3/8	3/4	6 7/8	3/8" x 3	ML1	S	S
2	MP3	1 3/4	5 1/16	1	6 1/16	2	3/4	6 7/8	3/8" x 2 3/4	ML10	S	S
12	MP2	1 1/16	5 1/8	1	6 1/8	2 3/8	3/4	6 7/8	3/8" x 1 1/2	ML2-8 loose	S	S
2	MP4	2	5 1/8	1	6 1/8	2 3/8	3/4	6 7/8	3/8" x 3	ML2A	S	S
4	MP5	2	3 5/16	1	4 1/16	2 1/4	3/4	4 7/8	3/8" x 3	MR2&3	S	S
2	MP6	2	4 3/8	1	5 3/8	2 3/8	3/4	5 7/8	3/8" x 3	MR2&3	S	S
4	MP7	2	5 1/4	1	6 1/4	2 3/8	3/4	6 7/8	3/8" x 3	ML15	S	S
2	MP8	1	2 1/16	1	3 1/16	1 1/4	3/4	3 7/8	3/8" x 1 3/4	ML5	S	S
1	MP9	1 1/2	2 3/4	1	3 3/4	1 3/4	3/4	4 7/8	3/8" x 2 1/2	ML8	S	S

8 extras

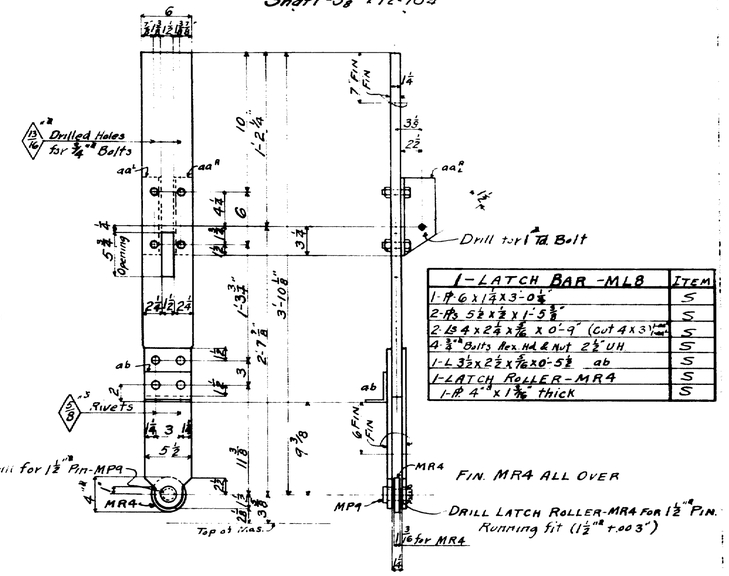

1-LATCH BAR-ML8	Item
1-Pl 6 x 1 1/4 x 3'-0 1/2"	S
2-Pls 5 1/2 x 2 1/2 x 1'-5 3/8"	S
2-Ls 4 x 2 1/2 x 7/16 x 0'-9" (cut 4 x 3 1/2")	S
4-3/4" Bolts Rex. HA & Nut 2 1/2" UH	S
1-L 3 1/2 x 2 1/2 x 7/16 x 0'-5 1/2" ab	S
1-LATCH ROLLER-MR4	S
1-Pl 4" x 1 3/16" thick	S

GIB HEAD KEY

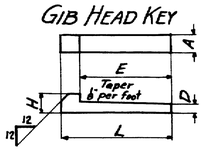

Location	No. Reqd	Mark	A	D	E	H	L	
MS26	1	MK29	5/16	9/32	2 1/8	5/8	2 1/2	For Limit Switch
MG7+MG15	2	MK2	5/8	1/2	5	1 1/8	5 13/16	
MG6	1	MK3	5/8	17/32	4 3/8	1 1/8	5 1/16	
SP1	1	MK4	5/8	17/32	5 1/2	1 1/8	6 1/16	
MG13	1	MK5	3/4	19/32	4 1/2	1 1/4	5 3/8	
MG14A	1	MK6	5/8	17/32	5 1/2	1 1/8	6 1/16	
MG18+ML6	3	MK7	5/8	17/32	3 1/4	1 1/8	4 1/16	
ML3 / ML30	2 / 1	MK8 / MK30	5/8 / 1	17/32 / 29/32	5 1/2	1 1/8	6 1/2	
MC1A	2	MK9	7/8	21/32	6 1/2	1 3/8	7 1/2	
MS27	2	MK28	5/16	9/32	1 3/4	5/8	2 1/8	For limit switch
MG11	1	MK11	3/4	13/32	5	1 1/4	5 7/8	
SP3	1	MK12	5/8	17/32	4	1 1/8	4 13/16	
MS25 / MS23	1 / 1	MK27 / MK26	5/16	9/32	1 1/2	5/8	1 3/4	For limit switch

PLAIN KEY

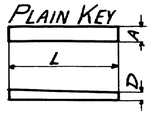

Location	No. Reqd	Mark	A	D	L	
MC11, 118, +118	4	MK13	1	23/32	6	
MC1	2	MK14	7/8	61/32	5 3/4	
SP4	1	MK16	5/16	7/32	2 5/8	
MG3	1	MK1	1 3/8	31/32	6 3/4	
MS26 Limit Switch / Limit Switch	1 / 1	MK27 / MK30 / MK31	3/8 / 1/2	11/32 / 1/2	1 1/2 / 1 1/4	For limit switch

STRAIGHT KEY

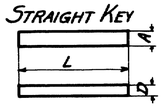

Location	No. Reqd.	Mark	A	D.	E
MG2	2	MK23	1	23/32	7 3/4
MG4 & MG5	1	MK18	1	23/32	12 5/16
MG14	1	MK24	5/8	17/32	4 1/2
MG9	1	MK25	1	23/32	9
ML2A	2	MK21	1	23/32	5
ML2	4	MK22	7/8	21/32	5
SP2	1	MK15	1/2	1/2	3 3/8

ML8 & MR4

Rolled Steel Shafts to be polished at bearings.

SHAFTING & MISC.

Steel by Mesta
Machine by Bridge
Erection by Weaver
Castings by
Rolling & Drafting by Joesten

AMERICAN BRIDGE CO.
AMBRIDGE PLANT
Dwgs. made at Ambridge Drafting Room of Record
Detailed by GAR Date 12-3-30 Checked by WFR Date 12-4-30
Fld. conn. chk. by Date
ORDER NO. G3823 SHEET NO. 12

4 76 13-1000

0 1 2 3 4 5 INCHES

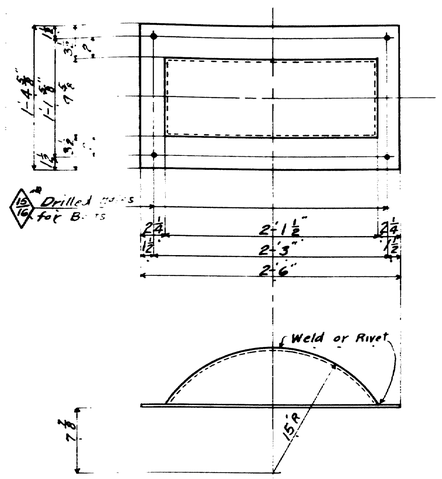

MA2

Make from 7/16 thick Galv. Steel
-Item No. 5.

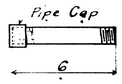

OIL PIPES OP1 & OP2

For Center

OP1 { 1-¾ Pipe 6"lg. Req'd S.
1-¾ Pipe Cap " S.

OP2 { 1-1 Pipe 6"lg " S
1-1 Pipe Cap " S.

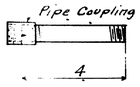

2-OIL PIPES-OP3

For BC1 & BC1A

2-¼ Pipe 4"lg. Req'd S.
2-¼ Pipe Coupling " S.

J.H. WILLIAMS & CO'S CATALOGUE 18th EDITION-PAGES 10 & 11

No. Req'd	Name	Catalogue Number	For U.S. Std. Hex. Nuts	Remarks
2	Engineers Wrenches 15"	48	1½ & 1¼	Semifinished D.H
2	" " "	43	1⅛ & 1	" D.H
2	" " "	39	⅞ & ¾	" D.H

Req'd 1341 Amb.

J.H. WILLIAMS & CO'S CATALOGUE 18th EDITION - PAGE 21

No. Req'd	Name	Catalogue Number	For (Std) Set Screws	Remarks
2	Set Screw Wrenches 22"	541	1 & ⅞	Semifinished DH
2	" " " "	537	¾ & ⅝	" DH
2	" " " "	505	½	" SH

Req'd 1341 Amb.

1-12" COES KNIFE HANDLE SCREW WRENCH
PITTSBURGH GAGE & SUPPLY CO.

Req'd 1342 Amb.

OILING SET

Copper Plated

Set similar to No. C30 (5 Piece with round tray) listed in PITTSBURGH GAGE & SUPPLY CO'S. CATALOGUE #12

Req'd 1342 Amb.

30-Industrial Reservoir Fittings ¼" Pipe thread-Type RM1
30-Industrial Reservoir Fittings ¼ Pipe thread-Type RM2
1-Alemite Compressor Type 1080 with industrial check valve hose abt 2'-0" long for Button Head Type Fittings.
} Req'd 1343 Amb.

Ship Boxed. (From Alemite Catalogue dated Aug. 1929)

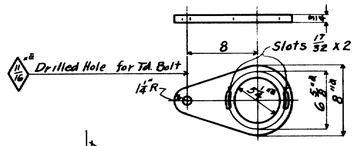

ONE LEVER-ML26

One Pl. 8 x ¾ x 1'-1⅛" Item S.

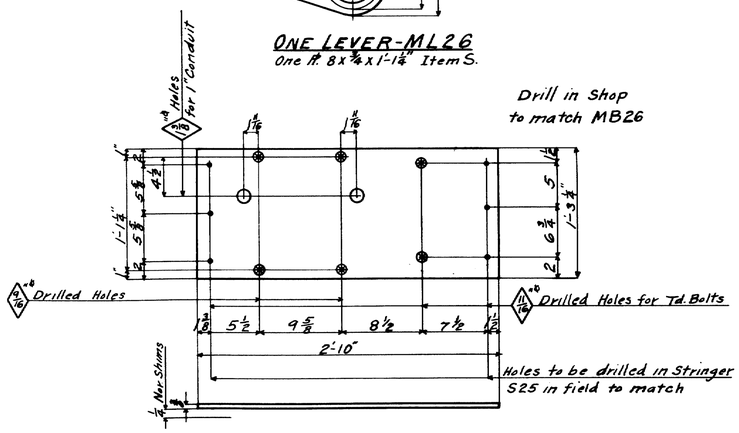

ONE PLATE-MA26

One Pl 15¼ x ⅜ x 2'-10" Item S.

SHOP BOLTS

Shouldered Turned Bolt — Dia. for reamed hole
Type A-Hex. Hd.
Type C-Sq. H

Shouldered Turned Bolt — Dia. for reamed hole
Type B-Hex. Hd.
Type H-Sq. Hd.
Type E-Csk. Hd.

Turned Bolt
Type-O

Type-D

Standard Washer
Type-X

Verona Nut Lock
Type-V

Standard Bevel Washer
Type-P

Style Bolt	No Req'd	Dia of Hole	Dia. of Bolt	Dia. of Thread	S	T	L	No. of Hex Nuts Each	No. of Wash. Each	Style of Wash.	Remarks	Weight
C	12	1 5/16		¼	13	3	16	2			BC1 & BC1A to MB1	
C	24	1 3/16		¾	4⅜	2⅛	6¼	2			Caps to Brgs. MB3	
C	4	1 5/16		⅞	5½	2¼	7¾	2			Caps to Brgs. MB6	
B	2	1 5/16		½	1⅞	1⅜	3¾	1			MC9 to MC9	
B	8	1 5/16		⅞	2⅜	1⅜	3¾	1			BC10 to MB10	
C	4	1 3/16		¾	4⅛	2⅛	7	2			Cap to Brg. MB11	
C	8	1 3/16		¾	3¾	2	5¾	2			Caps to Brgs. MB12	
D	8		¾			1½	2¼	1	1	X	MC9 to MC4	
A	8	1 5/16		1¼	4¼	3½	7¾	2	4	X	MB1 to MM1 to MA1	
A	2	1 5/16		1¼	3⅝	3⅜	7¼	2	4	X	MB1 to MM1	
A	8	1 5/16		1¼	12⅝	3⅜	16¼	2	4	X	MB1 to MM1	
A	8	1 3/16		¾	2⅜	2⅝	5	2	4	X	MB3 to MM4	
A	8	1 3/16		¾	2 1/16	2 3/16	4¼	2	3	X	MB3 to MM4	
A	8	1 5/16		¾	2 15/16	2 5/16	5½	2	3	X	MB3 to MM9	
A	6	1 5/16		⅞	2⅜	2⅝	5	2	3	X	MB4 to MM8 (Light driving fit)	
B	4	1 5/16		⅞	1⅜	1⅜	3¼	1	1	V	MB5 to MM8 (Light driving fit)	
B	16	1 5/16		⅞	2⅜	1⅜	3¾	1	1	V	MW1 to L10L12 & L10L12A	
B	8	1 5/16		⅞	2½	1¼	3¾	1	1	V	MW7 to CG1	
A	6	1 1/16		1"	4⅜	3⅛	7¾	2	4	X	MC5 to CG1	
A	6	1 1/16		1"	5	3¼	8¼	2	4	X	MC5 to CG1	
B	12	1 5/16		⅞	2⅜	1⅜	4¼	1	1	V	MB10 to MM7	
A	8	1 5/16		⅞	2 15/16	2⅜	5¾	2	4	X	MB18 to MM1-2	
A	8	1 5/16		⅞	3⅜	2⅜	6¾	2	4	X	MB18 to MM1-2	
A	8	1 5/16		⅞	3 1/16	2 1/16	6½	2	4	X	MB18 to MB19	
H	4	1 1/16		1"	5⅜	1⅜	6¾	1	1	V	MB19 to CG1	
H	4	1 1/16		1"	5	1½	6½	1	1	V	MB19 to CG1	
A	4	1 3/16		¾	3½	2¼	5¾	2	3	X	MB11 to MM9	
A	8	1 3/16		¾	4⅛	2⅜	6½	2	3	X	MB12 to MM9	
B	14	1 5/16		⅞	1 15/16	1 3/16	3	1	1	V	MB13 & 14 to MM9	
B	2	1 5/16		¾	2 3/16	1 3/16	3½	1	1	V	MB13 to MM9	
A	4	1 3/16		¾	2¼	2¼	4½	2	3	X	MB15 to MM9	
B	8	1 5/16		⅞	2 3/16	1 5/16	3½	1	1	V	MB16 to MM7	
A	32	1 3/16		¾	2 5/16	2 1/16	5	2	2	X	MB7 to L10L12 & L10L12A	
B	32	1 5/16		⅞	1⅞	1⅜	3¼	1	1	V	MB16 to MM15	
O	1		1			2½	4½	2	—	—	ML7 to ML8	
E	2	1 1/16		5/8	1⅛	1"	2⅛	1	1	V	MB26 to MA26	
	80	Verona Nut Locks for 1" Bolts						Type V			Summary of Washers for F3 & F4	
	10	(do)			for 1⅛" Bolts			Type V				
	20	(do)			for ⅞" Bolts			Type V				
	2	(do)			for ¾" Bolts			Type V				
	75	Std. Washers 3" x ¼ - 1 1/16" Hole						Type X				
	50	(do)			2¾" x ¼ - 1⅜" Hole			Type X				
	195	(do)			2¼" x ¼ - 15/16" Hole			Type X				
	115	(do)			2¼" x ⅛ - 1 1/16" Hole			Type X				
	10	(do)			2¼" x ¼ - 13/16" Hole			Type X				
	55	Std. Bevel Washers for ⅞" Bolts - Type P										
	40	(do)			for 1" Bolts - Type P							

NOTE TO SHOP! DO NOT MAKE BOLT - FROM THIS SHEET. USE SHEETS F3 & F4. ABOVE BOLTS ARE DUPLICATED ON F3 & F4 AND ARE HERE SHOWN FOR CUSTOMER'S FILE ONLY.

Steel of Maine
Main ... Bridge
... Driver
Design
Richmond & Dresden

AMERICAN BRIDGE CO.
AMBRIDGE PLANT
Design. ... Recht
Detailed by LPC Date 12-22-30 Checked by ... Date 12-23-30
Engineer ... Date
ORDER NO. G3823 SHEET NO. 13

4 (77) 13-100

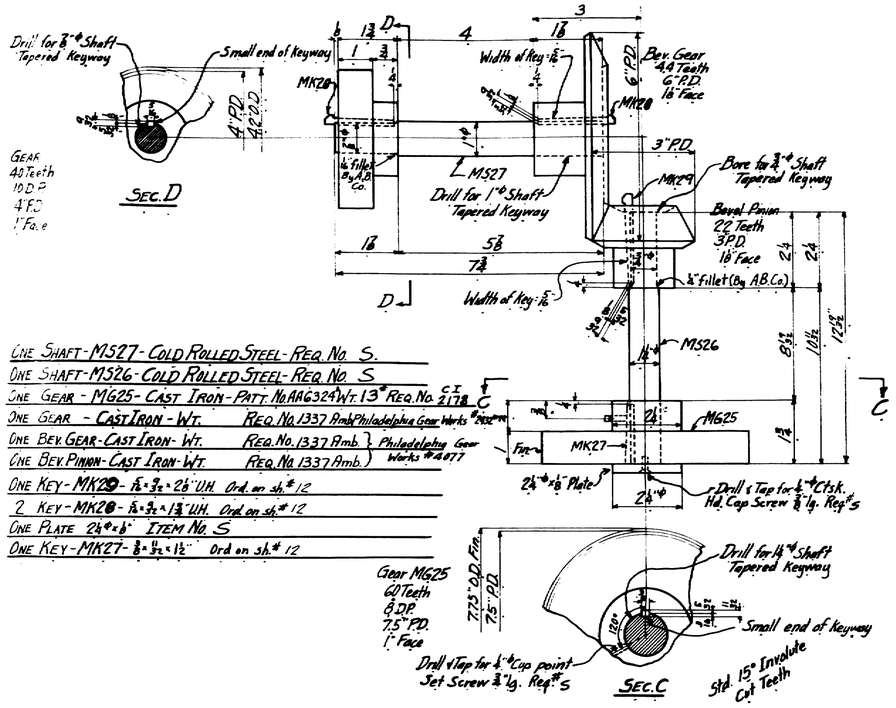

ONE SHAFT - M527 - COLD ROLLED STEEL - REQ. NO. S.
ONE SHAFT - M526 - COLD ROLLED STEEL - REQ. NO. S
ONE GEAR - MG25 - CAST IRON - PATT. NO. AAG324 WT. 13# REQ. NO. CI 2178
ONE GEAR - CAST IRON - WT. REQ. NO. 1337 Amb. } Philadelphia Gear Works #2427
ONE BEV. GEAR - CAST IRON - WT. REQ. NO. 1337 Amb. } Philadelphia Gear Works #2427
ONE BEV. PINION - CAST IRON - WT. REQ. NO. 1337 Amb. } Philadelphia Gear Works #2427
ONE KEY - MK20 - 1/2 x 3/32 x 2 5/8" U.H. Ord. on sh.# 12
2 KEY - MK28 - 1/4 x 3/32 x 1 3/4" U.H. Ord. on sh.# 12
ONE PLATE 2 1/4" ϕ x 1/8" ITEM NO. S
ONE KEY - MK27 - 3/8 x 11/32 x 1 1/2" Ord. on sh.# 12

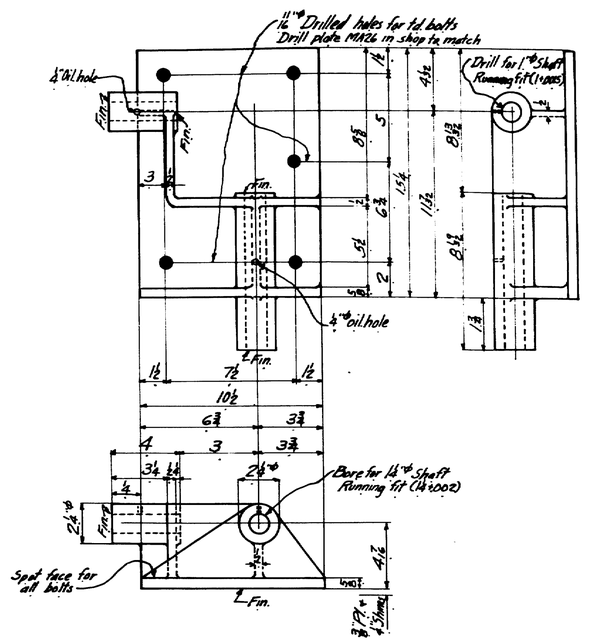

ONE BEARING - MB26 - CAST IRON - PATT. NO. AAG325 WT. 35# REQ. NO. CI 2178

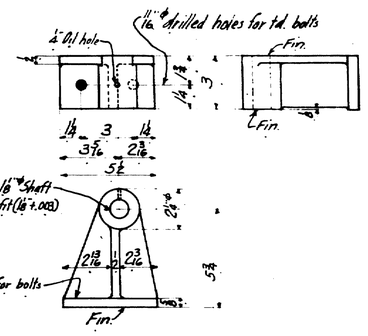

ONE BEARING - MB25 - CAST IRON - PATT. NO. AAG326 WT. 10# REQ. NO. CI 2178

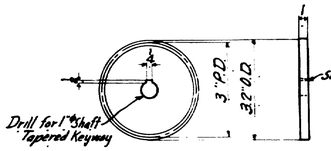

Pinion 30 Teeth 10 D.P. 3" P.D. 1" face

ONE GEAR - CAST IRON - WT. REQ. NO. 1337 Amb.
Stock Gear - Philadelphia Gear Works #2427

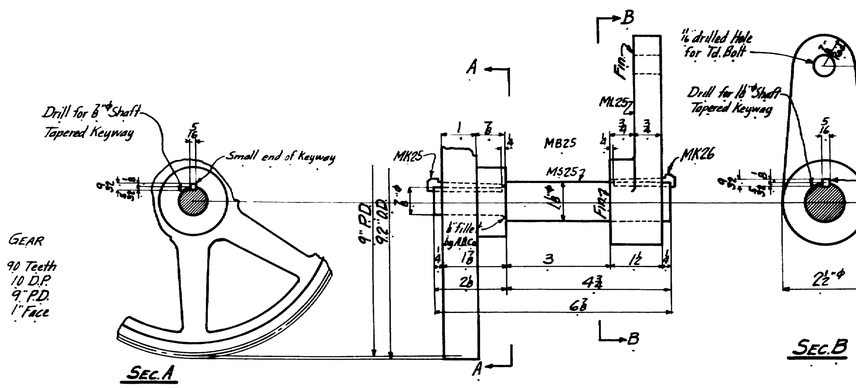

ONE SHAFT - MS25 - COLD ROLLED STEEL - REQ. NO. S
ONE GEAR - CAST IRON - WT. REQ. NO. 1337 Amb. Philadelphia Gear Works #2446
ONE LEVER - ML25 - FORGED STEEL - WT. REQ. NO. S
ONE KEY - MK25 - 1/4 x 3/32 x 1 1/8" U.H. Ord. on Sh.# 12
ONE KEY - MK26 - 1/4 x 3/32 x 1 1/2" U.H. Ord. on Sh.# 12

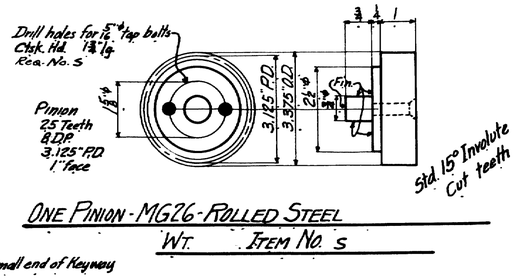

ONE PINION - MG26 - ROLLED STEEL
WT. ITEM NO. S

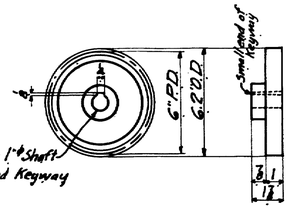

ONE GEAR - CAST IRON - WT. REQ. NO. 1337 Amb.
Stock Gear - Philadelphia Gear Works #2440

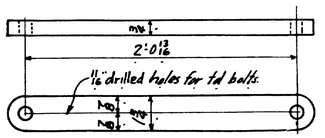

ONE BAR - MA25 - 1 3/4 x 3/4 x 2'-2 9/16" - ITEM NO. S

REQ. NO. FOR CAST IRON - CI - 2178

NOTES:-
Keyways in gears to be cut by A.B. Co.
All fin. surfaces to receive one coat of white lead & tallow

State of Maine
Maine Kennebec Bridge
over Kennebec River
between
Richmond & Dresden

AMERICAN BRIDGE CO.
AMBRIDGE PLANT
Dwgs. made at Ambridge No. in charge of Reehl
Detailed by WRR Date 12-20-30 Checked by WRR Date 12/31/30
Fld. conn. chk. by Date
ORDER NO. G3823 SHEET NO. 14

0 1 2 3 4 5 INCHES

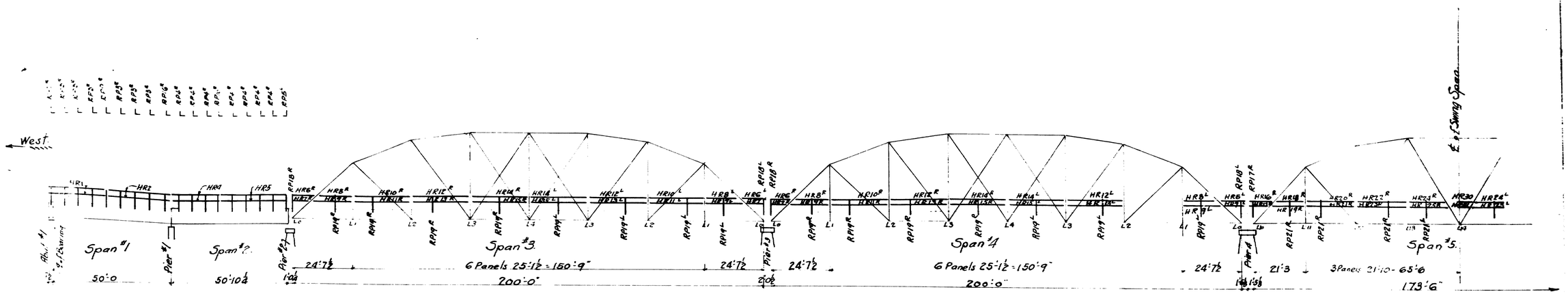

HAND RAILING & POSTS for UP STREAM TRUSS.
DOWN STREAM TRUSS (LEFT) except as shown.

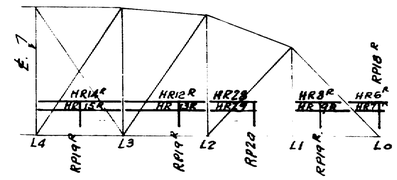

DOWN STREAM TRUSS.

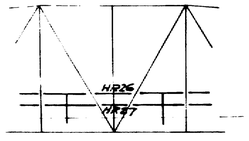

DOWN STREAM TRUSS

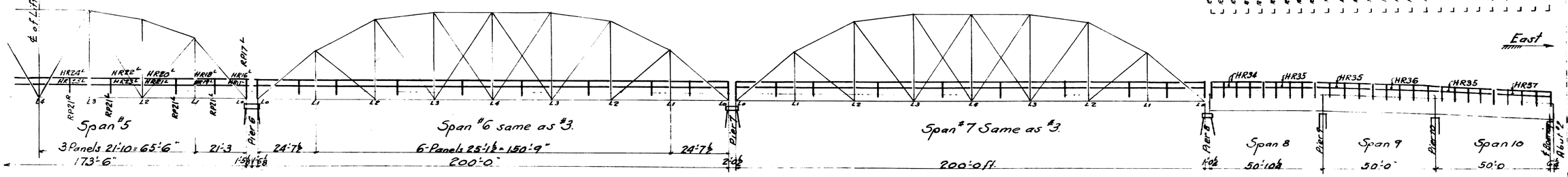

LIST OF DRAWINGS	
E1	Erection Plan
1	Channel Rolls
2	" "
3	Posts & Field Bolts
4	"
F1	Field Bolts
EF1	Erector's Lists

State of Maine
Maine Kennebec Bridge
over Kennebec River
between
Richmond & Dresden

AMERICAN BRIDGE CO.
AMBRIDGE PLANT
Dwgs. made at Ambridge No. 3 in charge of Nichols
Detailed by CGZ Date 7/7-30 Checked by Date
Fin. conn. chk. by Date
ORDER NO. G3824 SHEET NO. E1

13-100

0 1 2 3 4 5 INCHES

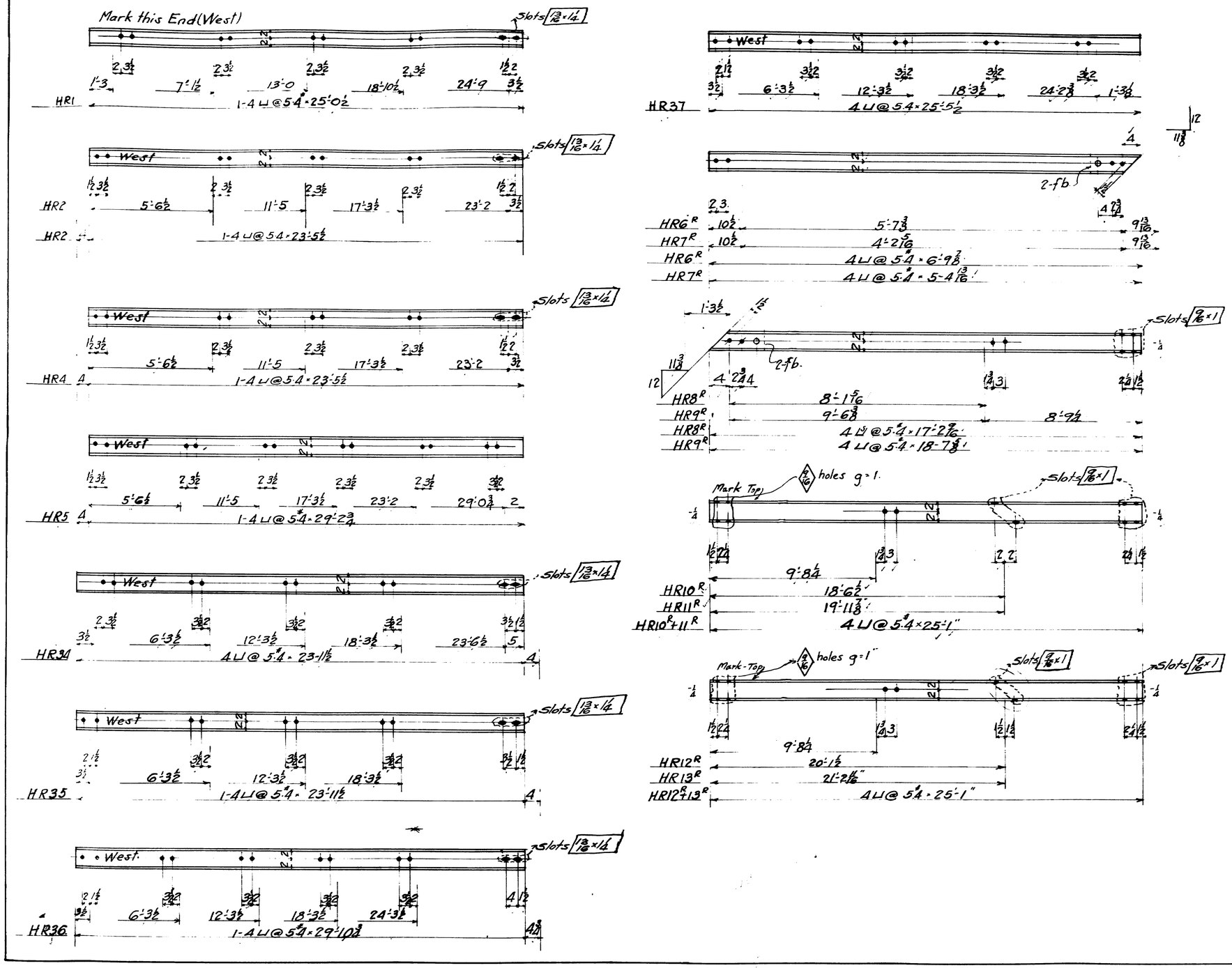

AMERICAN BRIDGE COMPANY

HAND RAILING

4 ⊔ 4 @ 5.4	25'-0 1/2	4-HR1	25'-0 1/2	3
4 ⊔ 4 @ 5.4	23'-5 1/2	4-HR2	23'-5 1/2	9
4 ⊔ 4 @ 5.4	23'-5 1/2	4-HR4	23'-5 1/2	9
4 ⊔ 4 @ 5.4	29'-2 3/4	4-HR5	29'-2 3/4	2
4 ⊔ 4 @ 5.4	23'-11 1/2	4-HR34	23'-11 1/2	7
12 ⊔ 4 @ 5.4	23'-11 1/2	12 HR35	23'-11 1/2	8
4 ⊔ 4 @ 5.4	29'-10 3/4	4-HR36	29'-10 3/4	1
4 ⊔ 4 @ 5.4	25'-5 1/2	4-HR37	25'-5 1/2	21
8 ⊔ 4 @ 5.4	6'-9 7/8	8-HR6R	6'-10	17
8 ⊔ 4 @ 5.4	6'-9 7/8	8-HR6L	6'-10	17
8 ⊔ 4 @ 5.4	5'-4 13/16	8-HR7R		5
8 ⊔ 4 @ 5.4	5'-4 13/16	8-HR7L		5
8 ⊔ 4 @ 5.4	17'-2 9/16	8-HR8R	17'-2 3/4	13
8 ⊔ 4 @ 5.4	17'-2 9/16	8-HR8L	17'-2 3/4	13
8 ⊔ 4 @ 5.4	18'-7 5/8	8-HR9R	18'-7 3/4	11
8 ⊔ 4 @ 5.4	18'-7 5/8	8-HR9L	18'-7 3/4	11
7 ⊔ 4 @ 5.4	25'-1	7-HR10R	25'-1	4
7 ⊔ 4 @ 5.4	25'-1	7-HR10L	25'-1	4
7 ⊔ 4 @ 5.4	25'-1	7-HR11R	25'-1	4
7 ⊔ 4 @ 5.4	25'-1	7-HR11L	25'-1	4
8 ⊔ 4 @ 5.4	25'-1	8-HR12R	25'-1	4
8 ⊔ 4 @ 5.4	25'-1	8-HR12L	25'-1	4
8 ⊔ 4 @ 5.4	25'-1	8-HR13R	25'-1	4
8 ⊔ 4 @ 5.4	25'-1	8-HR13L	25'-1	4
128 64 Fills	4 5/8 1'-0 1/2	fb HR6-7 R L	6'-30'-1	19
64 "		fb HR8+9 R L		

NOTES:
MATERIAL: O. H. Steel Card 855
SPECIFICATIONS: Maine State Highway Commission
INSPECTION: P. T. L.
ERECTION: A. B. Co.

RIVETS 3/4-dia
OPEN HOLES 13/16 ⌀ unless noted.

State of Maine
Maine Kennebec Bridge
over Kennebec River
between
Richmond & Dreeden

AMERICAN BRIDGE CO.
AMBRIDGE PLANT
Dwgs. made at Ambridge No. 3 in charge of Nichols
Detailed by [illegible] Date 11/17-30 Checked by I. A. Date 11/24/30
Fig. corr. chk. by Date
ORDER NO. G3824 SHEET NO. 1.

13-100

0 1 2 3 4 5 INCHES

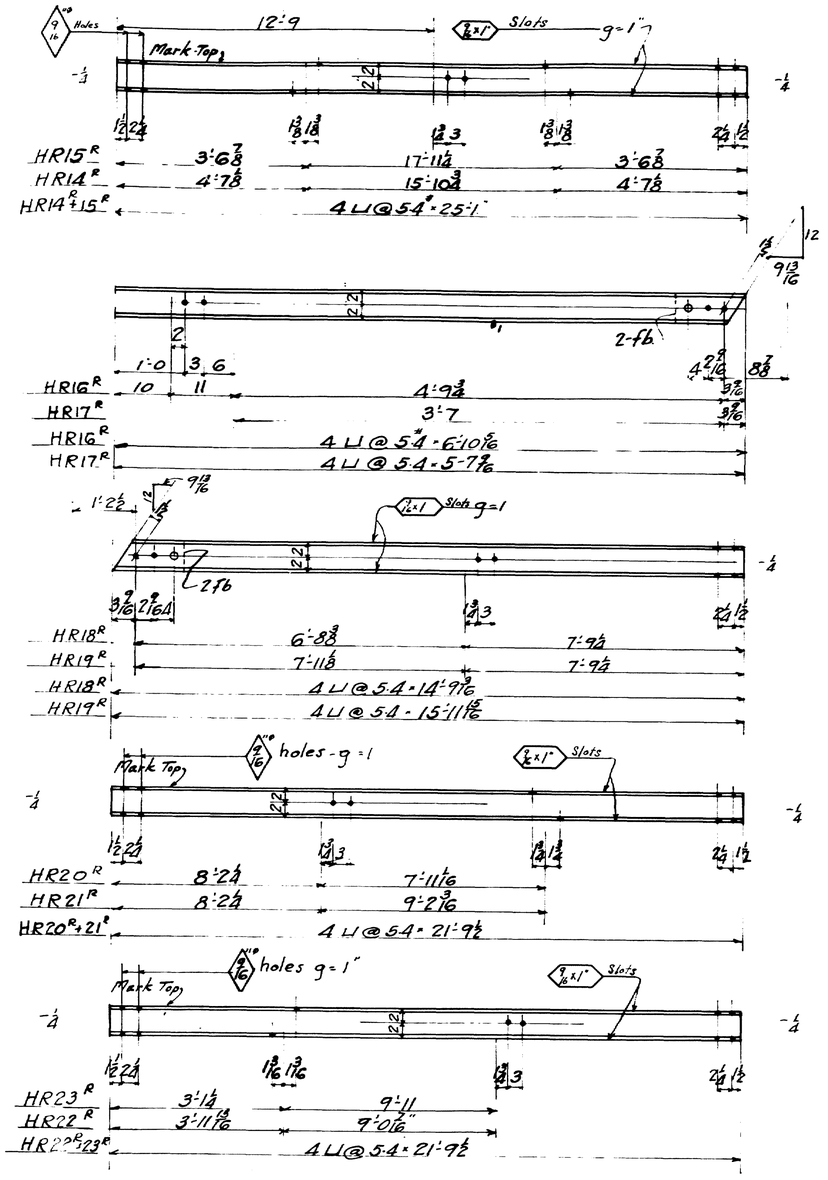

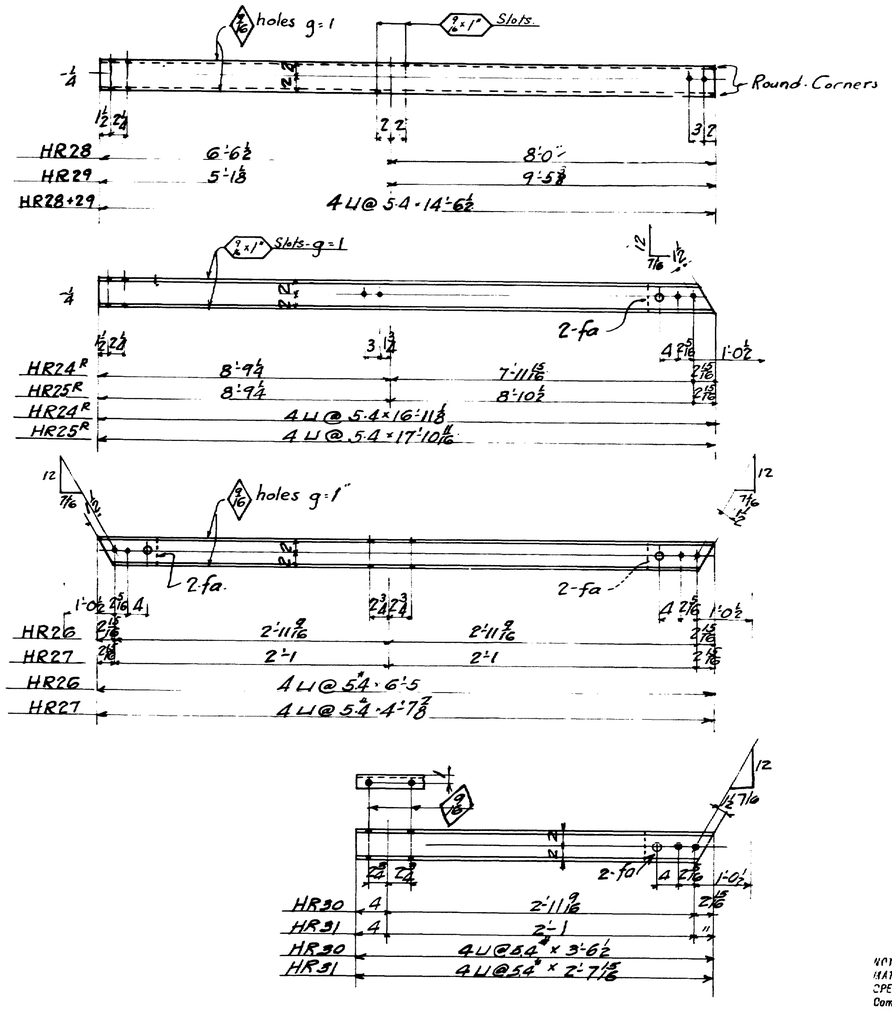

HAND RAILING

8 Ll 4 @ 5'-4	25-1	8-HR14R	4
8 Ll 4 @ 5'-4	25-1	8-HR14L	4
8 Ll 4 @ 5'-4	25-1	8-HR15R	4
8 Ll 4 @ 5'-4	25-1	8-HR15L	4
2 Ll 4 @ 5'-4	6'-10 5/16	2-HR16R 6'-10 1/2	16
32 8 Fills	4 1/16	fb 30-1	64
2 Ll 4 @ 5'-4	6'-10 5/16	2-HR16L 6'-10 1/2	16
2 Ll 4 @ 5'-4	5'-7 7/16	2-HR17R	5
8 Fills		fb	
2 Ll 4 @ 5'-4	5'-7 7/16	2-HR17L	5
2 Ll 4 @ 5'-4	14'-9 3/16	2-HR18R	5
8 Fills		fb	
2 Ll 4 @ 5'-4	14'-9 3/16	2-HR18L	5
2 Ll 4 @ 5'-4	15'-11 15/16	2-HR19R 16'-0	15
8 Fills		fb	
2 Ll 4 @ 5'-4	15'-11 15/16	2-HR19L 16'-0	15
2 Ll 4 @ 5'-4	21'-9 1/2	2-HR20R	10
2 Ll 4 @ 5'-4	21'-9 1/2	2-HR20L	10
2 Ll 4 @ 5'-4	21'-9 1/2	2-HR21R	10
2 Ll 4 @ 5'-4	21'-9 1/2	2-HR21L	10
2 Ll 4 @ 5'-4	21'-9 1/2	2-HR22R	10
2 Ll 4 @ 5'-4	21'-9 1/2	2-HR22L	10
2 Ll 4 @ 5'-4	21'-9 1/2	2-HR23R	10
2 Ll 4 @ 5'-4	21'-9 1/2	2-HR23L	10
1 Ll 4 @ 5'-4	14'-6 1/2	1-HR28	5
1 Ll 4 @ 5'-4	14'-6 1/2	1-HR29	5
2 Ll 4 @ 5'-4	16'-11 3/8	2-HR24R 16'-11 1/2	14
28 8 Fills	4 1/16 11	fa	5
2 Ll 4 @ 5'-4	16'-11 3/8	2-HR24L 16'-11 1/2	14
2 Ll 4 @ 5'-4	17'-10 11/16	2-HR25R 17'-10 3/4	12
8 Fills		fa	
2 Ll 4 @ 5'-4	17'-10 11/16	2-HR25L 17'-10 3/4	12
1 Ll 4 @ 5'-4	6'-5	1-HR26	5
4 Fills		fa	
1 Ll 4 @ 5'-4	4'-7 7/8	1-HR27	5
4 Fills		fa	
1 Ll 4 @ 5'-4"	3'-6 1/2	1-HR30	5
2 fills		fa	
1 Ll 4 @ 5'-4"	2'-7 15/16	1-HR31	5
2 Fills		fa	

NOTES:
MATERIAL: U. H. T. el Co. #855
SPECIFICATIONS: Maine State Highway Commission
INSPECTION: P. T. L.
ERECTION: A. B. Co.

RIVETS 3/4
OPEN HOLES 13/16 unless noted

State of Maine
Maine Kennebec Bridge
over Kennebec River
between
Richmond & Dresden

AMERICAN BRIDGE CO.
AMBRIDGE PLANT
Dwgs. made at Ambridge No. 3 in charge of Nichols
Detailed by CGZ Date 11/17-36 Checked by J.A. Date
Fin. comm. dtls. by Date
ORDER NO. G3824. SHEET NO. 2.

0 1 2 3 4 5 INCHES

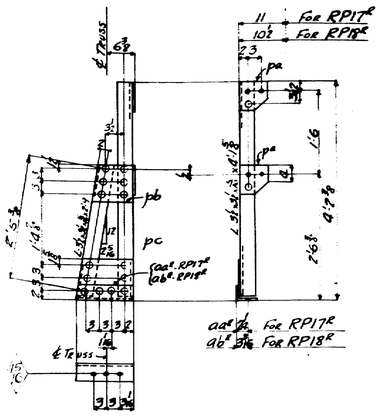

RAILING POSTS — RP17R & 18R

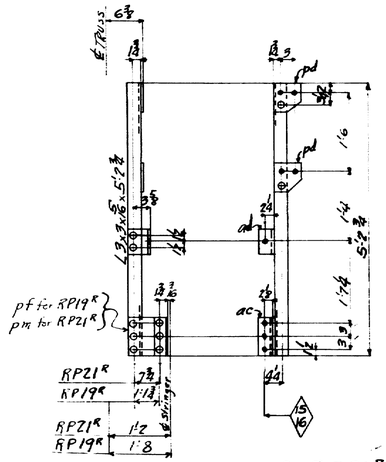

RAILING POSTS — RP19R & RP21R

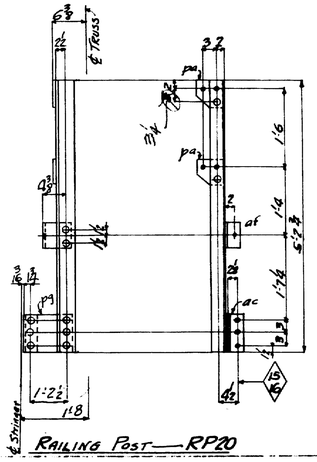

RAILING POST — RP20

Field Bolts for Hand Rail					
No.	Diam.	Leng.	Head	Nut	Type
1440	1/2	1 1/2	H	H	Ord.
465	3/4	1 1/2	H	H	Ord.
400	3/4	1 3/4	H	H	"
175	3/4	2 3/4	H	H	"
40	3/4	3	H	H	"

Page - F1

2 RAILING POSTS — RP17R
2 " " RP17L
8 " " RP18R
8 " " RP18L

	20	L	3 1/2	3 1/2	5/16	4	1 5/8		S
	20	L	3 1/2	3 1/2	5/16	2	7		S
	4	L	4	3 1/2	5/16	1	1 1/4	2-aaR 2-aaL	For RP17R S
	16	L	5	3 1/2	3/8	1	1 1/4	3-abR 3-abL	For RP18R S
42	40	PL		6 1/2	5/16		6 1/2	pa	5-30'-1 20
	20	PL		9	5/16		9	pb	S
	20	PL		9	5/16	1	1	pc	S

78 RAILING POSTS — 31-RP19R, 31-RP19L
8-RP21R + 8-RP21L

	78	L	3	3	5/16	5	2 3/4		13-31'-5 18
	156	PL		6 1/2	5/16		6 1/4	pd	30'-1 20
	62	PL		9	3/8	1	4 3/4	pf for RP19R	S
79	78	L	3 1/2	3	3/8		9	ac	S
	78	L	5	3 1/2	5/16		6	ad	S
	16	Pls		9	3/8		10 3/4	pm for RP21R	S

ONE RAILING POST RP20

	1	L	5	3 1/2	3/8	5	2 3/4		S
	1	L						ac	/
	2	PL						pa	/
	1	PL		9	3/8	1	5 1/2	pg	S
	1	L	6	3 1/2	3/8		6	af	S

NOTES:
MATERIAL: O. H. Steel Card 855
SPECIFICATIONS: Maine State Highway Commission
INSPECTION: P. T. L.
ERECTION: A. B. Co.

RIVETS 3/4
OPEN HOLES 15/16 UNLESS NOTED

State of Maine
Maine Kennebec Bridge
over Kennebec River
between
Richmond & Dresden

AMERICAN BRIDGE CO.
AMBRIDGE PLANT
Dwgs. made at Ambridge No. 3 in charge of Nichols
Detailed by G.L.L. Date 11-19-20 Checked by I.A. Date 11/20/20
Fin. assm. chk. by Date
G3824

0 1 2 3 4 5 INCHES

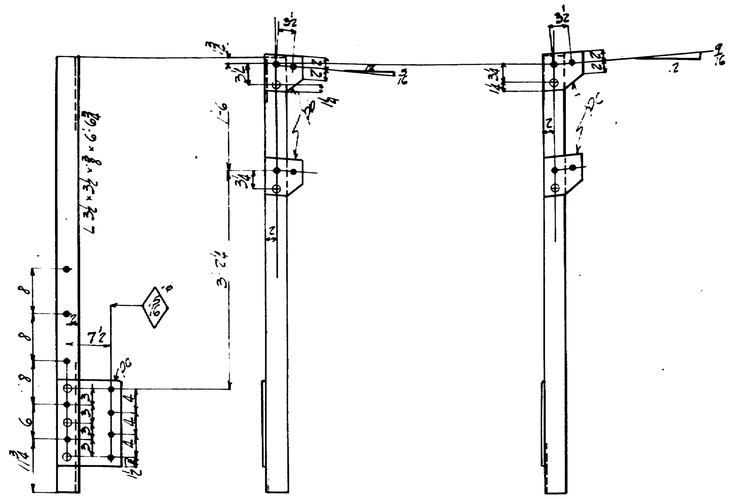

RP1ᴿ

RP2ᴿ
(same as RP1ᴿ except fig 2 'pc')

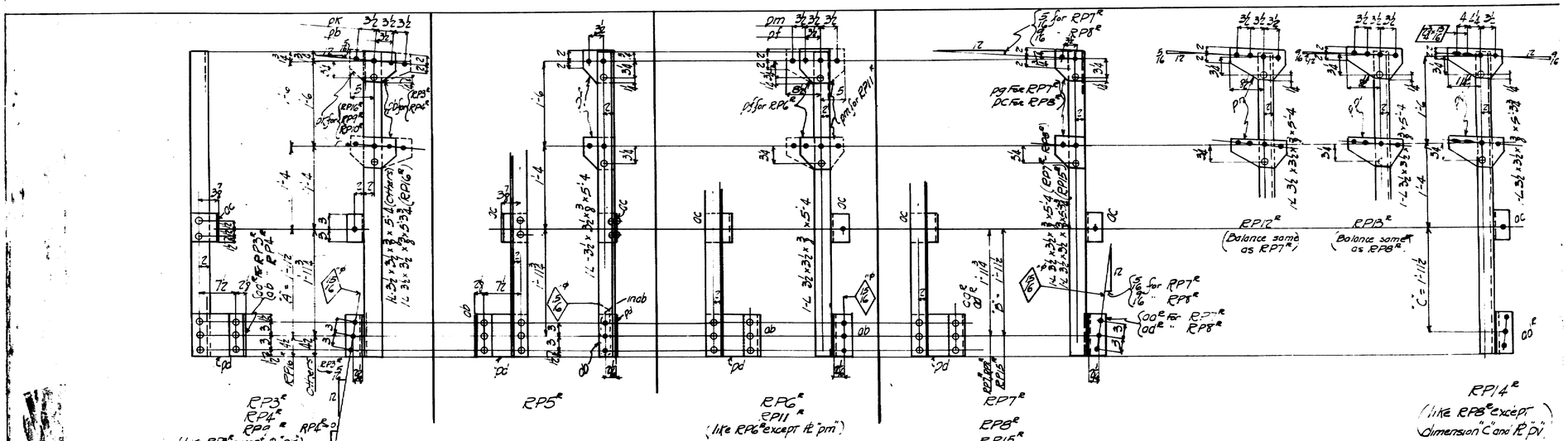

RP3ᴿ
RP4ᴿ
RP9ᴿ - RP16ᴿ
RP10ᴿ
RP16ᴿ
(like RP3ᴿ except fig. 'pk' and dimension 'A')

RP5ᴿ

RP6ᴿ
RP11ᴿ
(like RP6ᴿ except fig 'pm')

RP7ᴿ
RP8ᴿ
RP15ᴿ
(like RP1ᴿ except dimension '3')

RP12ᴿ
(Balance same as RP7ᴿ)

RP13ᴿ
(Balance same as RP8ᴿ)

RP14ᴿ
(like RP8ᴿ except dimension 'C' and fig 'pl')

2-Rail Posts { 2-RP1ᴿ, 2-RP1ᴸ }

2	L3	3½	3½	3/8	6	6¾		S
4	2	PL's		0½	5/16	1 3	pa	S
56	4	PL's		7	5/16	6½	pb	S

2-Rail Posts { 2-RP2ᴿ, 2-RP2ᴸ }

2	L5	3½	3½	3/8	6	6¾		S
2	PL's		0½	5/16	1	3	pa	
28	4	PL's		7	5/16	6½	pc	S

32-Rail Posts { 6-RP3ᴿ, 7-RP4ᴿ, one RP10ᴿ, one RP9ᴿ, one RP16ᴿ; 6-RP3ᴸ, 7-RP4ᴸ, one RP10ᴸ, one RP9ᴸ, one RP16ᴸ }

2	3	3½	3½	3/8	5	3¾	RP16ᴿ	S
30	L5	3½	3½	3/8	5	1/4	OTHERS	S
36	14	L5	3½	3½	5/16	9	ab	S
	2	L3					ab'	
16ᴿ 16ᴸ	8	L5	3½	3½	5/16	9	ac ᴿ	S
							ac ᴸ	
24	32	L5	5	3½	5/16	9	ac	S
	52	PL's		7	5/16	6½	pb	
	12	PL's		6½	5/16	1 1/2	pk	
84	32	PL's		10½	5/16	9	pd	S

4-Rail Posts { 2-RP5ᴿ, 2-RP5ᴸ }

4	8	3½	3½	3/8	5	4		S
4	13	3½	3½	5/16		9	ab	
4	8	5	3½	5/16		6	ac	
4	PL's		10½	7/16		9	pd	
32	8	PL's		7	7/16	6½	pf	S

16-Rail Posts { 6-RP6ᴿ, 6-RP6ᴸ, 2-RP11ᴿ, 2-RP11ᴸ }

16	L5	3½	3½	3/8	5	4		S
16	L3						ab	
16	L5						ac	
16	PL's						pd	
24	PL's						pf	
8	PL's		6½	7/16	1	1/2	pm	S

32-Rail Posts { 6-RP7ᴿ, 6-RP8ᴿ, one RP12ᴿ, one RP14ᴿ; 6-RP7ᴸ, 6-RP8ᴸ, one RP13ᴿ, one RP14ᴸ; one RP13ᴿ, one RP15ᴿ, one RP15ᴸ }

4	L3	3½	3½	3/8	5	3¾	RP15ᴿ - RP14ᴸ	S
28	L3	3½	3½	3/8	5	4	OTHERS	S
9	L5	3½	3½	5/16		9	ac ᴿ	
8	L5						ac ᴸ	
8	L3	3½	3½	5/16		9	ad ᴿ	
8	L3						ad ᴸ	
32	L3						ac	
32	PL's						pd	
28	PL's		7	5/16	6½	09	pe	S
24	PL's						pc	
4	PL's		6½	5/16	1	1/2	pm	
4	PL's		6½	5/16	1	1/2	pp	
4	PL's		6½	5/16	1	1/4	pl	

NOTES:
MATERIAL: O. H. Steel Card 855
SPECIFICATIONS: Maine State Highway Commission
INSPECTION: P. T. L.
ERECTION: A. B. Co.

RIVETS 7/8"ϕ
OPEN HOLES 13/16" unless noted

State of Maine
Maine Kennebec Bridge
over Kennebec River
between
Richmond & Dresden

AMERICAN BRIDGE CO.
AMBRIDGE PLANT

Design made at Ambridge No. 3 in charge of NICHOLS
Detailed by [illegible] Date 11/12/30 Checked by AJV Date
Fin. com. det. by Date
ORDER NO. 63824 SHEET

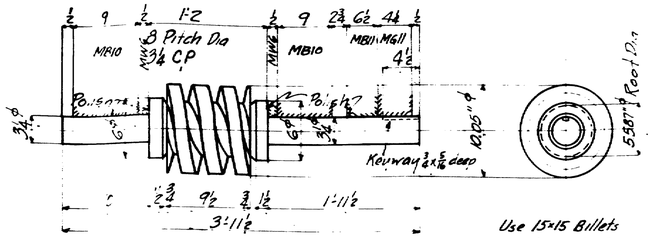

ONE WORM MG10 - STEEL FORGING - Item 5 Wt 250#
Machinery Steel FIN All Over

Use 15x15 Billets
Carbon 0.33
Manganese 0.64
Silicon 0.03
Phosphorus 0.016

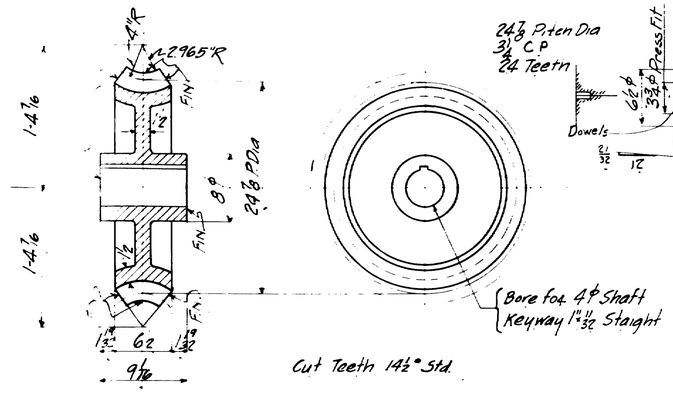

ONE WORM WHEEL MG9 - CAST IRON - PATT B659 Wt 530#

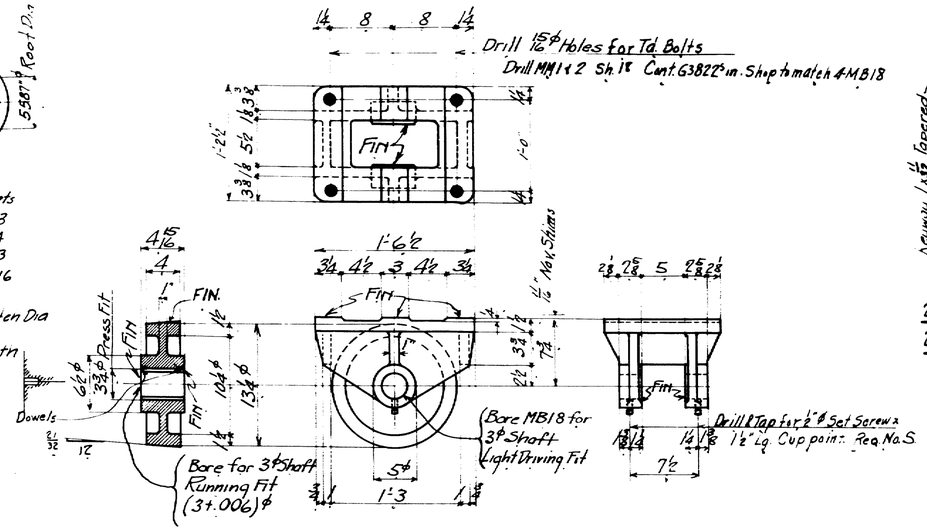

6-BALANCE WHEEL BEARINGS MB18 CAST STEEL-WT 200# PATT NO AA6296
6 BALANCE WHEELS - MW4 CAST STEEL WT 120# PATT NO. AA6297
6 BUSHINGS - BB2 - PHOS. BRONZE WT 6#

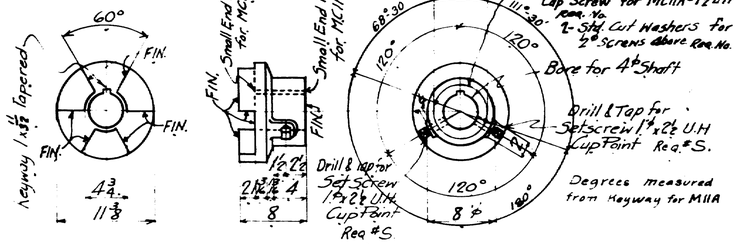

2-COUPLINGS - MC11 - CAST STEEL - WT 120# PATT NO AA6299
2-COUPLINGS { MC11A / MC11B } CAST STEEL - WT 120# PATT NO AA6299

MC11 & MC11A are Mated Couplings
Keyways to be in line when mated.

MC11 & MC11B are Mated Couplings
Keyways to be in line when mated

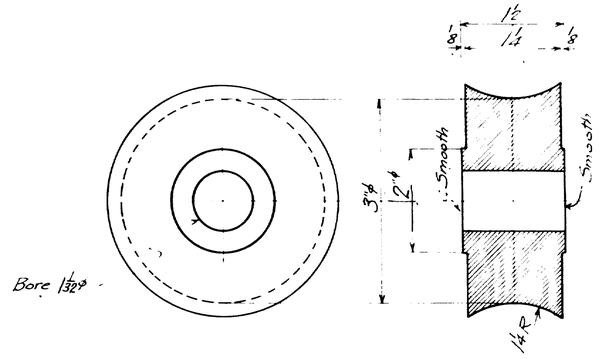

22 - ROLLERS - MW5 - CAST STEEL WT 3# PATT NO. AA2927

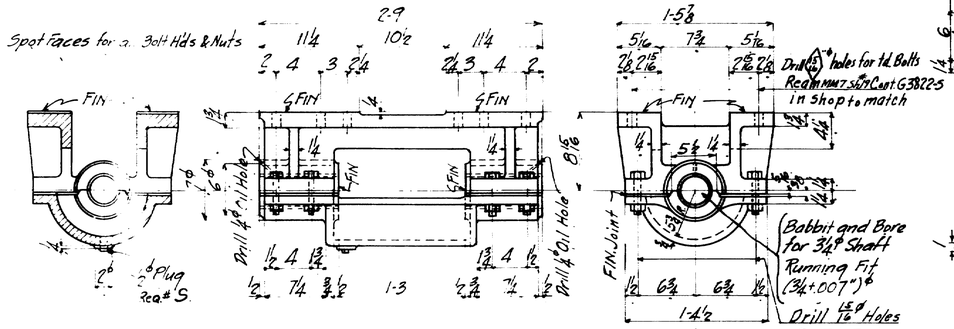

ONE BEARING MB10 - CAST STEEL WT 525# PATT B6286
ONE BEARING CAP BC10 - CAST STEEL WT 250# PATT B6287

2-BALANCE WHEEL BLOCKS - MB19 - CAST STEEL WT 219# PATT. AA6300

Req.# FOR CAST STEEL - C.S. - 2875
Req.# FOR CAST IRON - CI 2178
Req.# FOR PHOS. BRONZE - CB - 2177

Notes:
All Steel Castings to be annealed
Finished Surfaces to have one coat of white lead and tallow.

State of Maine
Maine Kennebec Bridge
over Kennebec River
between
Richmond & Dresden

AMERICAN BRIDGE CO.
AMBRIDGE PLANT
Dwgs. made at Ambridge No. 3 in charge of Reehl
Detailed by JC Date 11-20-30 Checked by W.F.R. Date 12-2-30
Fin. comm. chk. by Date
ORDER NO. G3823 SHEET NO. 7

Rev. 3-19-31

7

13-10

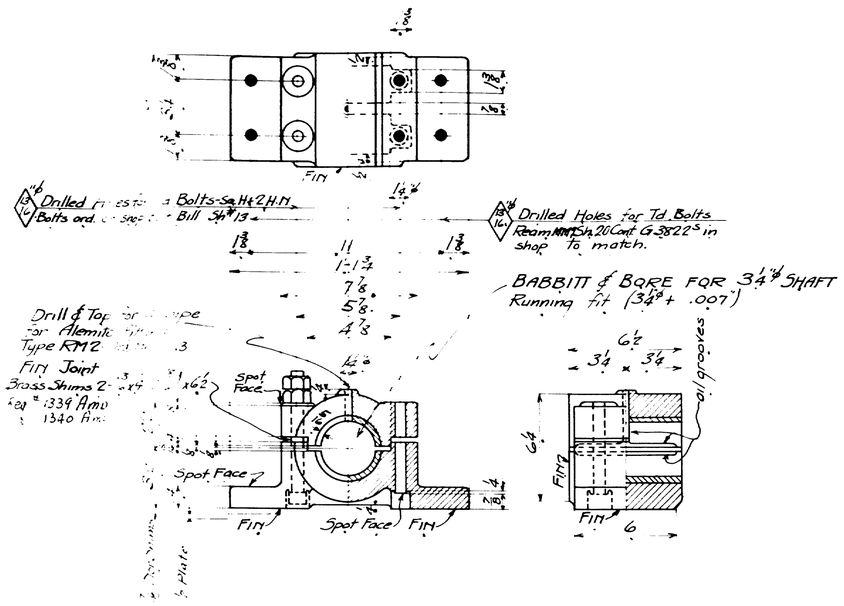

1- BEARING - MB11 - CAST STEEL - PATT NO. AA6301A WT. 55#

1- CAP - CAST STEEL - PATT NO. AA6302A WT. 30#

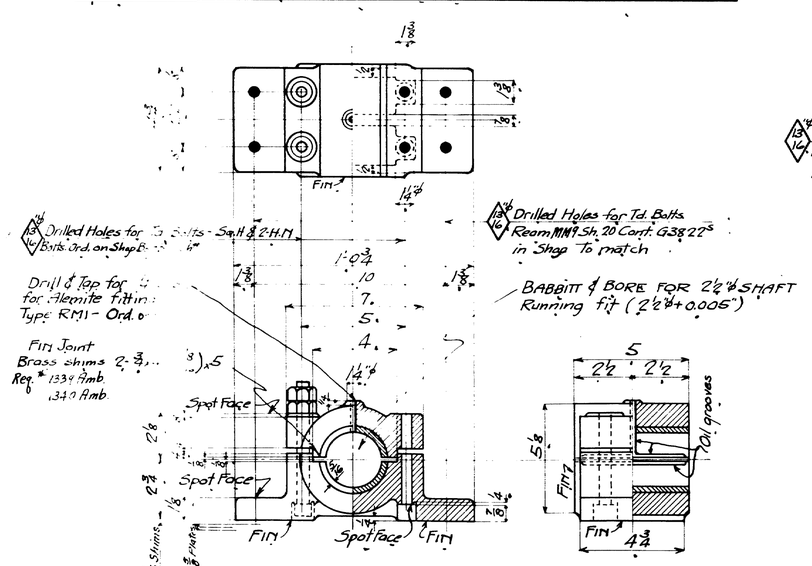

2- BEARINGS - MB12 - CAST STEEL - PATT. NO. AA6303A WT. 35#

2- CAPS - CAST STEEL - PATT. NO. AA6304A WT. 20#

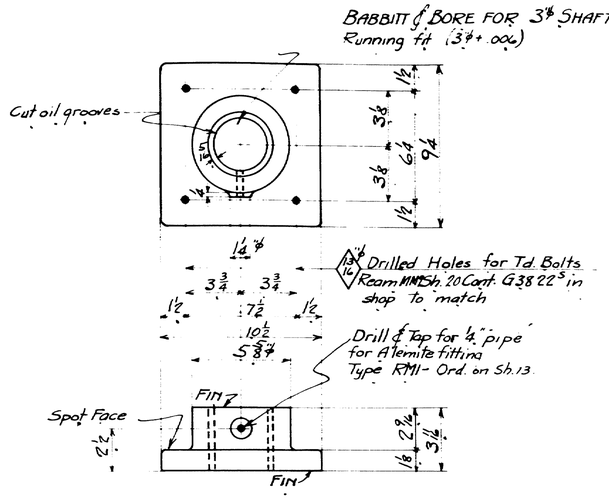

2- BEARINGS - MB13 - CAST STEEL - PATT NO. AA6305A WT. 45#

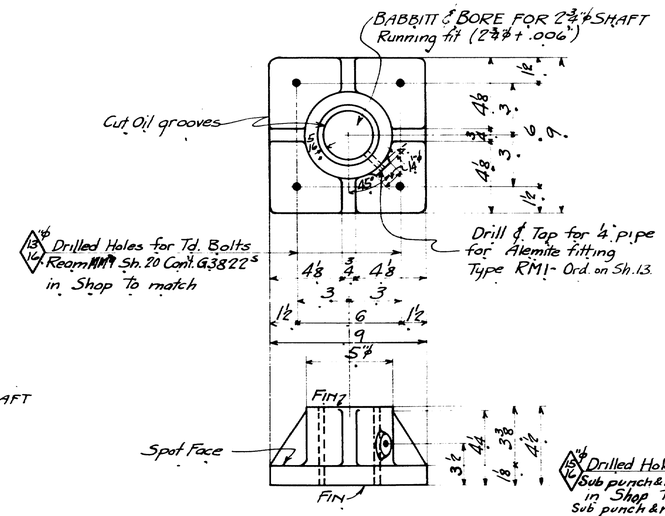

2- BEARINGS - MB14 - CAST STEEL PATT NO. AA6306A WT. 45#

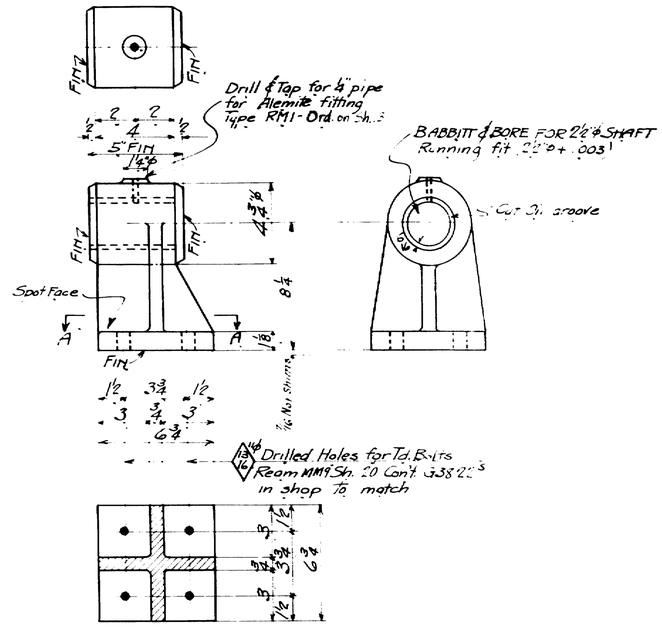

1- BEARING - MB15 - CAST STEEL - PATT NO. AA6307A WT. 50#

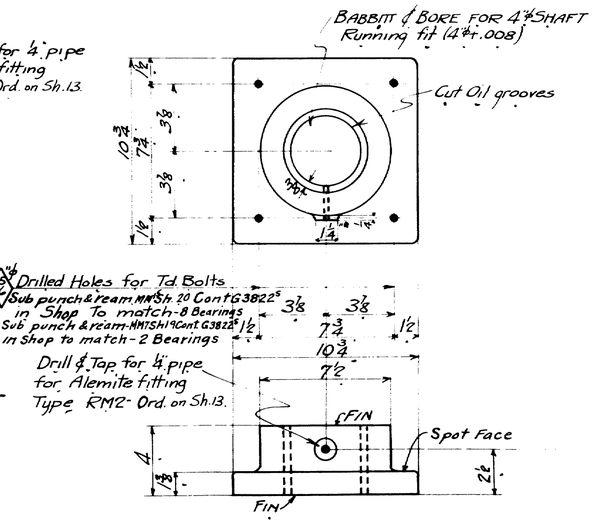

10- BEARINGS - MB16 - CAST STEEL - PATT NO. AA6308A WT. 70#

Req. No for Cast Steel CS-2875

NOTES

All Steel castings to be annealed

All babbitt to be well anchored with button cores

All oil grooves to be ¼" wide and ⅛" deep, corners to be well rounded, and grooves to be smooth.

Finished surfaces to have one coat of White Lead & Tallow.

State of Maine
Maine Kennebec Bridge
over Kennebec River
between
Richmond & Dresden

AMERICAN BRIDGE CO.
AMBRIDGE PLANT

Dwgs. made at Ambridge No. 3 in charge of Reehl
Detailed by LDB Date 11-19-30 Checked by WFR Date 11-29-30
Fld. conn. chk. by Date
ORDER NO. G3823 SHEET NO. 8

13-100D

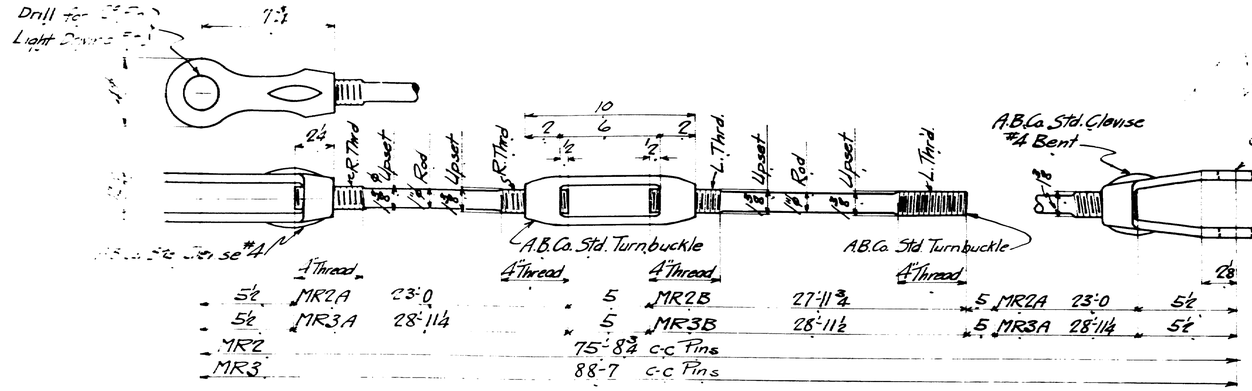

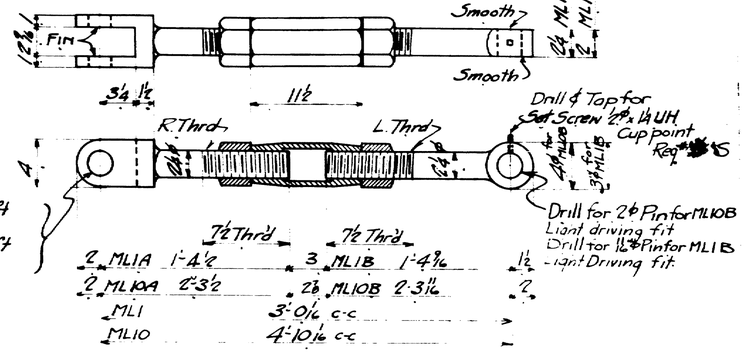

2-TENSION RODS MR2 75'-8¾ c.c. Pins
4-Rods MR2A-Rolled Steel Item No 7
2-Rods MR2B Rolled Steel Item No. 6
2-Std. Clevises #4-Ship with 2 MR2A Req* S.
2-Std. Clevises #4 Bent Ship with 2 MR2A Req* S.
4-Std. Turnbuckles 1⅜ Tap Ship with MR2B Req* S
4-Pins MP5 & MP6 (Ord on Sh 12) Ship with MR2A

2-TENSION RODS MR3 88'-7 c-c Pins
4-Rods MR3A-Rolled Steel Item No 2 & 4
2-Rods MR3B-Rolled Steel Item No 4
2-Std. Clevises #4-Ship with MR3A Req* S
2-Std. Clevises #4 Bent-Ship with MR3A Req* S
4-Std Turnbuckles 1⅜ Tap Ship with MR3B Req* S
2-Pins MP5 (Ord. on Sh 12) Ship with MR3A

4-END WEDGE LINKS ML1 - 3'-0¼ c-c
4-Forgings ML1A - Forged Steel Item* 5
4-Forgings ML1B - Forged Steel Item* 5
4-Std. Sleeve Nuts 2¼" Tap Req* 1353 Amb.
4-Hex Nuts 2¼" Tap R. Thrd Req* S.
4-Hex Nuts 2¼" Tap L. Thrd Req* S.
4-Set Screws 2"x1¼ UH. Req* S.
Ship Assembled
4 Pins MP1 - Detailed on Sh. 12.

2-CENTER WEDGE LINKS ML10 4'-10⅞ c-c
2-Forgings ML10A - Forged Steel Item* 5
2-Forgings ML10B - Forged Steel Item* 5
2-Std. Sleeve Nuts 2¼" Tap Req* 1353 Amb.
2-Hex Nuts 2¼" Tap-R. Thrd. Req* S.
2-Hex Nuts 2¼" Tap-L. Thrd Req* S.
2-Set Screws 2"x1¼ UH Req* S.
Ship Assembled
2-Pins MP3 - Detailed on Sh 12.

FORGINGS - Use Med. Steel
Billets - Carbon 0.25 to 0.30
Manganese 0.40 to 0.60

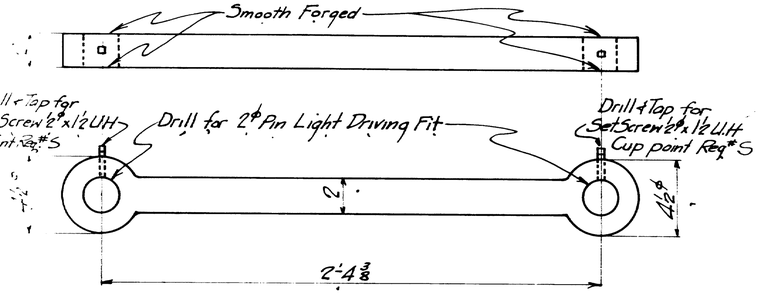

Forgings
Use Med. Steel Billets
Carbon .25 to .30
Manganese .40 to .60

2-CENTER WEDGE LINKS ML12 FORGED STEEL ITEM 5 WT.

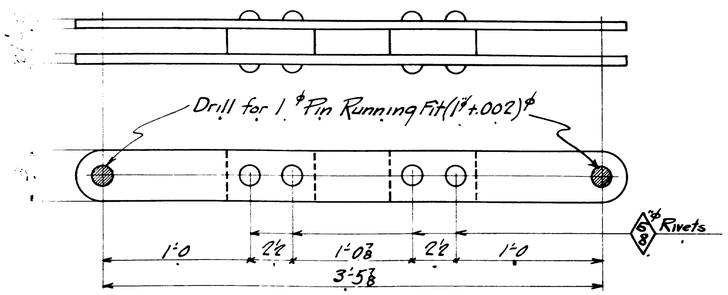

1-LATCH LINKS ML5 WT.
2-Bars 3x½x3'-8⅜ Item No 5
2-Fills 3x1⅛x5 Item No 5
2-Pins MP8 - Ord. on Sh. 12.

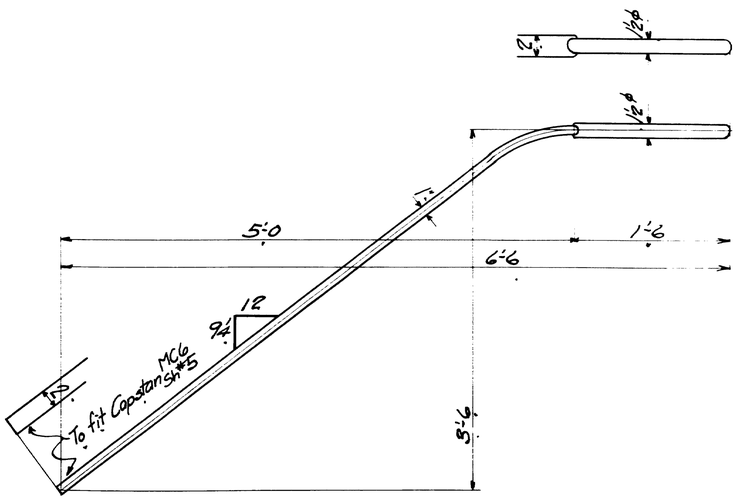

4-TURNING LEVERS - ML11 - FORGED STEEL ITEM 5 WT.

ONE DISC LIFTER - ML13 - FORGED STEEL ITEM 5

State of Maine
Maine Kennebec Bridge
over Kennebec River
between
Richmond & Dresden

AMERICAN BRIDGE CO.
AMBRIDGE PLANT
Dwgs. made at Ambridge No. 3 in charge of Roehl
Detailed by JC Date 11/24/50 Checked by WFR Date 12-4-50
Fins. conn. chk. by Date
ORDER NO. G3823- SHEET NO. 9

13-100

WFR 12-12

0 1 2 3 4 5 INCHES

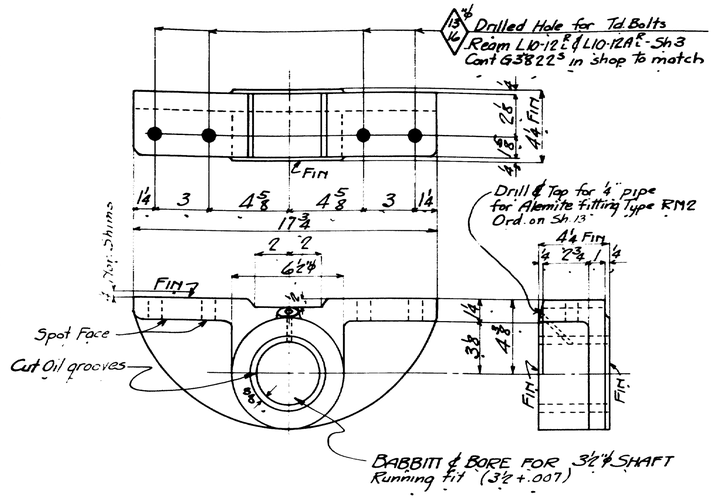

8-BEARINGS-MB7-CAST STEEL-PATT. NO. AA6309Δ WT. 70#

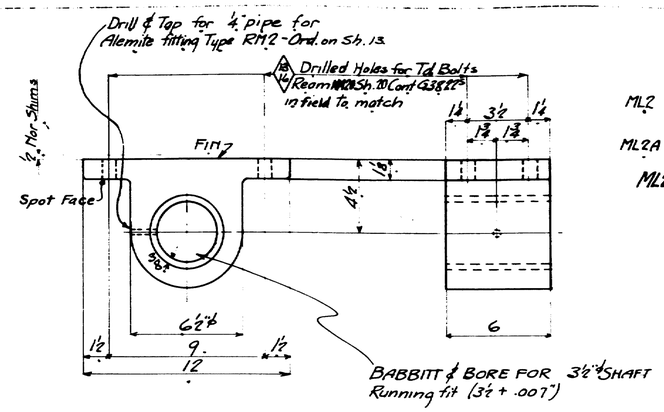

2-BEARINGS-MB8-CAST STEEL-PATT. NO. AA6311Δ WT. 80#

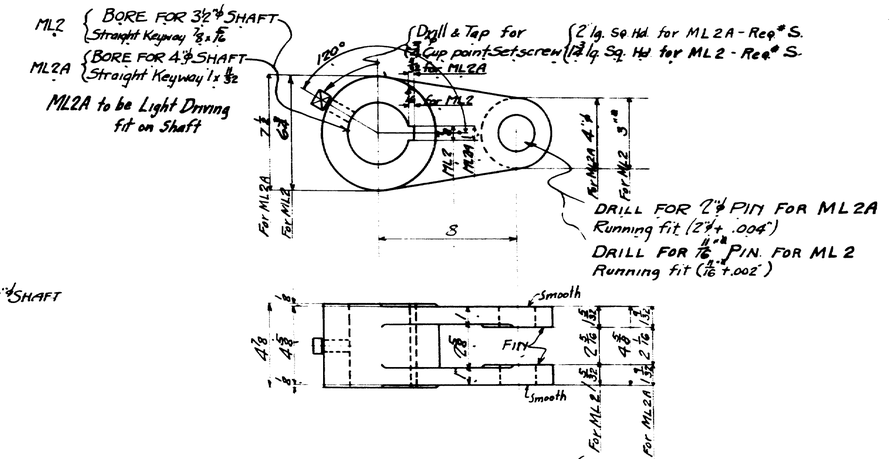

4-LEVERS ML2
2-LEVERS-ML2A
CAST STEEL { PATT NO. AA6314Δ WT. 55#
PATT NO. AA6315Δ WT. 70#

4 MP2 for ML2
2 MP4 for ML2A
} Ord. on Sh. 12.

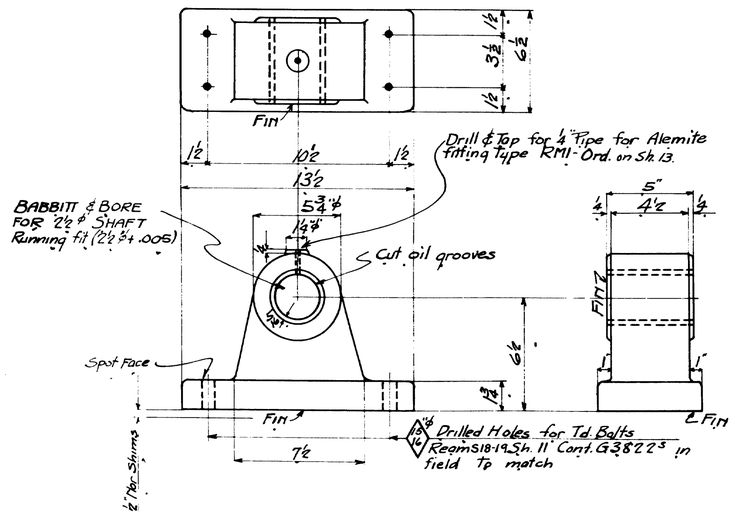

2-BEARINGS-MB9-CAST STEEL-PATT. NO. AA6310Δ WT. 115#

REQ. NO. FOR CAST STEEL-CS-2875 and CS.2908
REQ. NO. FOR CAST IRON-CI-2178

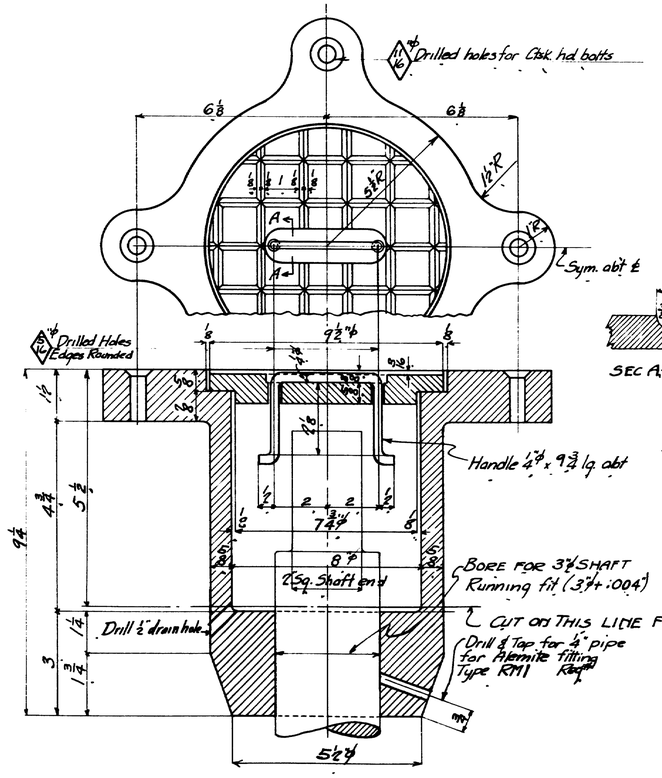

1-CAPSTAN SHAFT GUARD-MC10-CAST IRON-PATT. NO. AA6312Δ WT. 85#
1-CAPSTAN SHAFT GUARD-MC10A-CAST IRON-PATT. NO. WT. 45#
2-COVERS MCC10 CAST IRON-PATT. NO. AA6313Δ WT. 15#

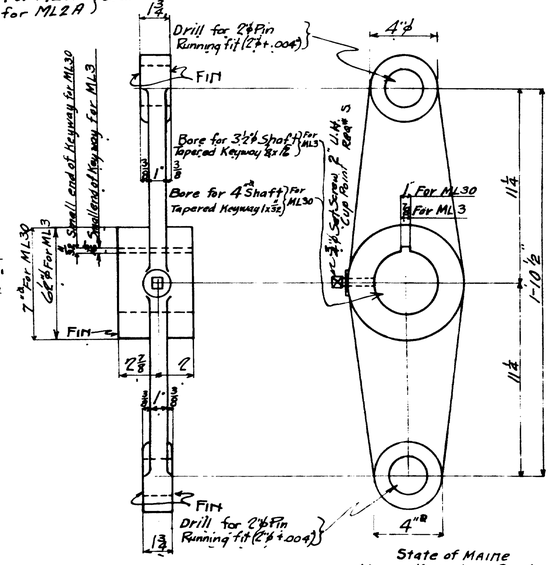

2-LEVERS-ML3-CAST STEEL PATT. NO. AA6316Δ WT. 70#
1-LEVER-ML30-CAST STEEL-PATT. NO. AA6403 WT. 73#

NOTES:
All Steel castings to be Annealed
All babbitt to be well anchored with button Cores
All oil grooves to be ¼" wide and ⅛" deep, corners to be well rounded, and grooves to be smooth.
Finished surfaces to have one coat of White Lead & Tallow.

State of Maine
Maine Kennebec Bridge
over Kennebec River
between
Richmond & Dresden

AMERICAN BRIDGE CO.
AMBRIDGE PLANT
Dwgs. made at Amb. No 3 in charge of Reehl
Detailed by DB Date 12-2-30 Checked by WHR Date 12-2-30
Fld. Contr. Chk. by Date
ORDER No. G3823 SHEET No. 10

0 1 2 3 4 5 INCHES