Updated 10/04/12

FEDERAL PROJECT

BIDDING INSTRUCTIONS

FOR ALL PROJECTS:

1. Use pen and ink to complete all paper Bids.
2. As a minimum, the following must be received prior to the time of Bid opening:

For a Paper Bid:

a) a copy of the Notice to Contractors, b) the completed Acknowledgement of Bid Amendments form, c) the completed Schedule of Items, d) two copies of the completed and signed Contract Offer, Agreement & Award form, e) a Bid Guaranty, (if required), and f) any other certifications or Bid requirements listed in the Bid Documents as due by Bid opening.

For an Electronic Bid:

a) a completed Bid using Expedite® software and submitted via the Bid Express™ web-based service, b) an electronic Bid Guaranty (if required) or a faxed copy of a Bid Bond (with original to be delivered within 72 hours), and c) any other Certifications or Bid requirements listed in the Bid Documents as due by Bid opening.

3. Include prices for all items in the Schedule of Items (<u>excluding non-selected alternates</u>).
4. Bid Guaranty acceptable forms are:
   a) a properly completed and signed Bid Bond on the Department's prescribed form (or on a form that does not contain any significant variations from the Department's form as determined by the Department) for 5% of the Bid Amount or
   b) an Official Bank Check, Cashier's Check, Certified Check, U.S. Postal Money Order or Negotiable Certificate of Deposit in the amount stated in the Notice to Contractors or
   c) an electronic bid bond submitted with an electronic bid.

5. If a paper Bid is to be sent, "FedEx First Overnight" delivery is suggested as the package is delivered directly to the DOT Headquarters Building located at 16 Child Street in Augusta. Other means, such as U.S. Postal Service's Express Mail has proven not to be reliable.

IN ADDITION, FOR FEDERAL AID PROJECTS:

6. Complete the DBE Proposed Utilization form, and submit with your bid. If you are submitting your bid electronically, you must FAX the form to (207) 624-3431. This is a curable defect.

If you need further information regarding Bid preparation, call the DOT Contracts Section at (207) 624-3410.

For complete bidding requirements, refer to Section 102 of the Maine Department of Transportation, Standard Specifications, Revision of December 2002.

January 19, 2012
Supersedes September 09, 2011

NOTICE

The Maine Department of Transportation is attempting to improve the way Bid Amendments/Addendums are handled, and allow for an electronic downloading of bid packages from our website, while continuing to maintain an optional planholders list.

Prospective bidders, subcontractors or suppliers who wish to download a copy of the bid package and receive a courtesy notification of project specific bid amendments, must provide an email address to Diane Barnes or David Venner at the MDOT Contracts mailbox at: MDOT.contracts@maine.gov. Each bid package will require a separate request.

Additionally, interested parties will be responsible for reviewing and retrieving the Bid Amendments from our web site, and acknowledging receipt and incorporating those Bid Amendments in their bids using the Acknowledgement of Bid Amendment Form.

The downloading of bid packages from the MDOT website is <u>not</u> the same as providing an electronic bid to the Department. Electronic bids must be submitted via http://www.BIDX.com. For information on electronic bidding contact Patrick Corum at patrick.corum@maine.gov, Rebecca Snowden at rebecca.snowden@maine.gov or Diane Barnes at diane.barnes@maine.gov.

NOTICE

For security and other reasons, all Bid Packages which are mailed, shall be provided in double (one envelope inside the other) envelopes. The *Inner Envelope* shall have the following information provided on it:

Bid Enclosed - Do Not Open
WIN:
Town:
Date of Bid Opening:
Name of Contractor with mailing address and telephone number:

In Addition to the usual address information, the *Outer Envelope* should have written or typed on it:

Double Envelope: Bid Enclosed
WIN:
Town:
Date of Bid Opening:
Name of Contractor:
This should not be much of a change for those of you who use Federal Express or similar services.

Hand-carried Bids may be in one envelope as before, and should be marked with the following infrormation:

Bid Enclosed: Do Not Open
WIN:
Town:
Name of Contractor:

October 16, 2001

STATE OF MAINE DEPARTMENT OF TRANSPORTATION

Bid Guaranty-Bid Bond Form

KNOW ALL MEN BY THESE PRESENTS THAT_____

_____, of the City/Town of _____and State of_____

as Principal, and _____as Surety, a

Corporation duly organized under the laws of the State of_____and having a usual place of

Business in _____and hereby held and firmly bound unto the Treasurer of

the State of Maine in the sum of_____,for payment which Principal and Surety bind

themselves, their heirs, executers, administrators, successors and assigns, jointly and severally.

The condition of this obligation is that the Principal has submitted to the Maine Department of Transportation, hereafter Department, a certain bid, attached hereto and incorporated as a part herein, to enter into a written contract for the construction of _____

_____

_____and if the Department shall accept said bid and the Principal shall execute and deliver a contract in the form attached hereto (properly completed in accordance with said bid) and shall furnish bonds for this faithful performance of said contract, and for the payment of all persons performing labor or furnishing material in connection therewith, and shall in all other respects perform the agreement created by the acceptance of said bid, then this obligation shall be null and void; otherwise it shall remain in full force, and effect.

Signed and sealed this_____day of _____20_____

WITNESS:

_____

_____

_____

WITNESS

_____

_____

_____

PRINCIPAL:

By_____

By:_____

By:_____

SURETY:

By_____

By:_____

Name of Local Agency: _____

SAMPLE

NOTICE

Bidders:

Please use the attached "Request for Information" form when faxing questions and comments concerning specific Contracts that have been Advertised for Bid. Include additional numbered pages as required. Questions are to be faxed to the number listed in the Notice to Contractors. This is the only allowable mechanism for answering Project specific questions. Maine DOT will not be bound to any answers to Project specific questions received during the Bidding phase through other processes.

State of Maine
Department of Transportation

REQUEST FOR INFORMATION

Date _____ Time _____

Information Requested: **WIN:** _____ **Town(s):** _____

_____

_____

_____

_____

_____

_____

_____

_____

_____

_____

_____

_____

Request by: _____ **Phone: (_____)**_____
Bid Date: _____ **Fax: (_____)**_____

Complete top portion of fo rm and transmit to the number listed in the Notice to Contractors

RFI No: _____ **RFI received:** _____

Response:_____

_____

_____

_____

_____

_____

_____

_____

_____

_____

_____

Response By:_____ Date: _____

NOTICE

Disadvantaged Business Enterprise Proposed Utilization

The Apparent Low Bidder shall submit the Disadvantaged Business Enterprise Proposed Utilization form with their bid. This is a curable bid defect.

The Contractor's Disadvantaged Business Enterprise Proposed Utilization Plan form contains additional information that is required by USDOT.

The Contractor's Disadvantaged Business Enterprise Proposed Utilization Plan form should be used.

A copy of the new Contractor's Disadvantaged Business Enterprise Proposed Utilization Plan and instructions for completing it are attached.

Note: Questions about DBE firms, or to obtain a printed copy of the DBE Directory, contact The Office of Civil Rights at (207) 624-3066.

MDOTs DBE Directory of Certified firms can also be obtained at www.maine.gov/mdot/disadvantaged-business-enterprises/dbe-home.php

INSTRUCTIONS FOR PREPARING THE MaineDOT CONTRACTOR'S DBE/SUBCONTRACTOR UTILIZATION FORM

The Contractor Shall Extend equal opportunity to MaineDOT certified DBE firms (as listed in MaineDOT's DBE Directory of Certified Businesses) in the selection and utilization of Subcontractors and Suppliers.

SPECIFIC INSTRUCTIONS FOR COMPLETING THE FORM:

Insert Contractor name, the name of the person(s) preparing the form, and that person(s) telephone, fax number and e-mail address.

Calculate and provide percentage of your bid that will be allocated to DBE firms, Federal Project Identification Number, and location of the Project work.

In the columns, name each subcontractor, DBE and non-DBE firm to be used, provide the Unit/Item cost of the work/product to be provided by the subcontractor, give a brief description and the dollar value of the work.

Revised 1/12

DBE GOAL NOTICE
Maine Department of Transportation
Disadvantaged Business Enterprise Program

Notice is hereby given that in accordance with US DOT regulation 49 CFR Part 26, the Maine Department of Transportation has established a DBE Program for disadvantaged business participation in the federal-aid highway and bridge construction program; MaineDOT contracts covered by the program include consulting, construction, supplies, manufacturing, and service contracts.

For FFY 2013-15 (October 1, 2012 through September 30, 2015) MaineDOT has established an annual DBE participation goal of **4.0%** to be achieved through race/gender neutral means. This goal has been approved by the Federal Highway Administration and remains in effect through September 30, 2015. Maine DOT must meet this goal each federal fiscal year. If the goal is not met, MaineDOT must provide a justification for not meeting the goal and provide a plan to ensure the goal is met, which may include contract goals on certain projects that contractors will be required to meet.

MaineDOT asks all contractors, consultants and subcontractors to seek certified DBE firms for projects and to work to meet the determined 4.0% goal without the need to impose contract goals. DBE firms are listed on the MaineDOT website at:

http://www.maine.gov/mdot/disadvantaged-business-enterprises/pdf/directory.pdf

Interested parties may view MaineDOT's DBE goal setting methodology also posted on this website. If you have questions regarding this goal or the DBE program you may contact Sherry Tompkins at the Maine Department of Transportation, Civil Rights Office by telephone at (207) 624-3066 or by e-mail at: sherry.tompkins@maine.gov

.

MaineDOT CONTRACTOR'S DBE/SUBCONTRACTOR PROPOSED UTILIZATION FORM

All Bidders must furnish this form with their bid on Bid Opening day

Contractor: _____ **Telephone:** _____ **Ext** _____

Contact Person: _____ **Fax:** _____

E-mail: _____

BID DATE: _____

FEDERAL PROJECT WIN _____ **PROJECT LOCATION:** _____

TOTAL ANTICIPATED DBE ____ % PARTICIPATION FOR THIS CONTRACT

WBE	DBE	Non DBE	Firm Name	Item Number & Description of Work	Quantity Cost	Per Unit/Item	Anticipated $ Value
						Subcontractor Total>	
				DBE		Total >	

NOTE: THIS INFORMATION IS USED TO TRACK AND REPORT ANTICIPATED DBE PARTICIPATION IN ALL FEDERALLY FUNDED MAINE DOT CONTRACTS. THE ANTICIPATED DBE AMOUNT IS VOLUNTARY AND WILL NOT BECOME A PART OF THE CONTRACTUAL TERMS.

Equal Opportunity Use:

Form received: ___/___/___ Verified by: _____

For a complete list of certified firms and company designation (WBE/DBE) go to http://www.maine.gov/mdot

Rev. 05/12

Maine Department of Transportation Civil Rights Office

Directory of Certified Disadvantaged Business Enterprises

Listing can be found at:

www.maine.gov/mdot/disadvantaged-business-enterprises/dbe-home.php

For additional information and guidance contact: Civil Rights Office at (207) 624-3066

It is the responsibility of the Contractor to access the DBE Directory at this site in order to have the most current listings.

Vendor Registration

Prospective Bidders must register as a vendor with the Department of Administrative & Financial Services if the vendor is awarded a contract. Vendors will not be able to receive payment without first being registered. Vendors/Contractors will find information and register through the following link –
http://www.maine.gov/purchases/venbid/index.shtml

STATE OF MAINE DEPARTMENT OF TRANSPORTATION
NOTICE TO CONTRACTORS

Sealed Bids addressed to the Maine Department of Transportation, Augusta, Maine 04333 and endorsed on the wrapper "Bids for Maine Kennebec Bridge Replacement in the town of **RICHMOND** and **DRESDEN**" will be received from contractors at the Reception Desk, Maine DOT Building, Capitol Street, Augusta, Maine, until 11:00 o'clock A.M. (prevailing time) on May 15, 2013 and at that time and place publicly opened and read. Bids will be accepted from all bidders. The lowest responsive bidder must have completed, or successfully complete, a bridge, or project specific prequalification to be considered for the award of this contract. **We now accept electronic bids for those bid packages posted on the bidx.com website. Electronic bids do not have to be accompanied by paper bids. Please note: the Department will accept a facsimile of the bid bond; however, the original bid bond must then be received at the MDOT Contract Section within 72 hours of the bid opening. Until further notice, dual bids (one paper, one electronic) will be accepted, with the paper copy taking precedence.**

Description: Maine Federal Aid Project No. AC-BH-1267(400), WIN 012674.00 & 012674.10

Location: In Sagadahoc and Lincoln County, project is located on route 197 over the Kennebec River approximately 0.5 mile westerly of route 128.

Scope of Work: Maine Kennebec Bridge replacement. FRP composite pile driving, testing, and removal plus other incidental work.

For general information regarding Bidding and Contracting procedures, contact George Macdougall at (207)624-3410. Our webpage at http://www.maine.gov/mdot/contractors/ contains a copy of the schedule of items, Plan Holders List, written portions of bid amendments (not drawings), and bid results. For Project-specific information fax all questions to **Project Manager Nate Benoit** at (207)624-3431. Questions received after 12:00 noon of Monday prior to bid date will not be answered. Bidders shall not contact any other Departmental staff for clarification of Contract provisions, and the Department will not be responsible for any interpretations so obtained. TTY users call Maine Relay 711.

Plans, specifications and bid forms may be seen at the Maine DOT Building in Augusta, Maine. They may be purchased from the Department between the hours of 8:00 a.m. to 4:30 p.m. by cash, credit card (Visa/Mastercard) or check payable to Treasurer, State of Maine sent to Maine Department of Transportation, Attn.: Mailroom, 16 State House Station, Augusta, Maine 04333-0016. They also may be purchased by telephone at (207) 624-3536 between the hours of 8:00 a.m. to 4:30 p.m. Full size plans $238.00 ($250.00 by mail). Half size plans $119.00 ($124.00 by mail), Bid Book $10 ($13 by mail), Single Sheets $2, payment in advance, all non-refundable.

Each Bid must be made upon blank forms provided by the Department and must be accompanied by a bid bond at 5% of the bid amount or an official bank check, cashier's check, certified check, certificate of deposit, or United States postal money order in the amount of $610,000.00 payable to Treasurer, State of Maine as a Bid guarantee. A Contract Performance Surety Bond and a Contract Payment Surety Bond, each in the amount of 100 percent of the Contract price, will be required of the successful Bidder.

This Contract is subject to all applicable Federal Laws. This contract is subject to compliance with the Disadvantaged Business Enterprise program requirements as set forth by the Maine Department of Transportation.

All work shall be governed by "State of Maine, Department of Transportation, Standard Specifications, Revision of December 2002", price $10 [$13 by mail], and Standard Details, Revision of December 2002, price $20 [$25 by mail]. They also may be purchased by telephone at (207) 624-3536 between the hours of 8:00 a.m. to 4:30 p.m. Standard Detail updates can be found at http://www.maine.gov/mdot/contractors/publications/ .

The right is hereby reserved to the Maine DOT to reject any or all bids.

Augusta, Maine
April 17, 2013

STATE OF MAINE
Kenneth
L.
Sweeney
4028
LICENSED
PROFESSIONAL ENGINEER

KENNETH L. SWEENEY P.E.
CHIEF ENGINEER

Richmond - Dresden
Maine Kennebec Bridge
WIN 012674.00 & 012674.10
April 14, 2011
Supersedes August 3, 2004

SPECIAL PROVISION 102.7.3
ACKNOWLEDGMENT OF BID AMENDMENTS

With this form, the Bidder acknowledges its responsibility to check for all Amendments to the Bid Package. For each Project under Advertisement, Amendments are located at http://www.maine.gov/mdot/contractors/ . It is the responsibility of the Bidder to determine if there are Amendments to the Project, to download them, to incorporate them into their Bid Package, and to reference the Amendment number and the date on the form below. The Maine DOT will not post Bid Amendments any later than noon the day before Bid opening without individually notifying all the planholders.

Amendment Number	Date

The Contractor, for itself, its successors and assigns, hereby acknowledges that it has received all of the above referenced Amendments to the Bid Package.

CONTRACTOR

_____ _____
Date Signature of authorized representative

_____
(Name and Title Printed)

NOTICE

All bids for Federal Projects **shall** be accompanied by the DBE Proposed Utilization form. If you are submitting an electronic bid, the DBE Utilization Form may be faxed to 207-624-3431. Failure to submit the form with the bid will be considered a curable defect.

CONTRACT ID: 012674.00 PROJECT(S): AC-BH-1267(400)
012674.10

CONTRACTOR :_____

LINE NO	ITEM DESCRIPTION	APPROX. QUANTITY AND UNITS	UNIT PRICE DOLLARS	UNIT PRICE CTS	BID AMOUNT DOLLARS	BID AMOUNT CTS
SECTION 0001 PROJECT ITEMS						
0010	201.11 CLEARING	2.000 AC				
0020	201.23 REMOVING SINGLE TREE TOP ONLY	12.000 EA				
0030	201.24 REMOVING STUMP	12.000 EA				
0040	202.08 REMOVING BUILDING NO.: 1	LUMP	LUMP			
0050	202.08 REMOVING BUILDING NO.: 2	LUMP	LUMP			
0060	202.19 REMOVING EXISTING BRIDGE	LUMP	LUMP			
0070	202.20 REMOVING BITUMINOUS CONCRETE PAVEMENT	2760.000 SY				
0080	203.20 COMMON EXCAVATION	5900.000 CY				
0090	203.24 COMMON BORROW	45500.000 CY				
0100	203.25 GRANULAR BORROW	3500.000 CY				

CONTRACT ID: 012674.00 PROJECT(S): AC-BH-1267(400)
012674.10

CONTRACTOR :_____

LINE NO	ITEM DESCRIPTION	APPROX. QUANTITY AND UNITS	UNIT PRICE DOLLARS	UNIT PRICE CTS	BID AMOUNT DOLLARS	BID AMOUNT CTS
0110	206.082 STRUCTURAL EARTH EXCAVATION - MAJOR STRUCTURES	130.000 CY				
0120	206.092 STRUCTURAL ROCK EXCAVATION - MAJOR STRUCTURES	112.000 CY				
0130	206.10 STRUCTURAL EARTH EXCAVATION - PIERS	3600.000 CY				
0140	206.11 STRUCTURAL ROCK EXCAVATION - PIERS	82.000 CY				
0150	304.10 AGGREGATE SUBBASE COURSE - GRAVEL	6600.000 CY				
0160	403.209 HOT MIX ASPHALT 9.5 MM (SIDEWALKS, DRIVES, INCIDENTALS)	111.000 T				
0170	403.2101 9.5 MM POLYMER MODIFIED HMA	1552.000 T				
0180	403.213 HOT MIX ASPHALT 12.5 MM BASE	1139.000 T				
0190	409.15 BITUMINOUS TACK COAT - APPLIED	500.000 G				
0200	501.231 DYNAMIC LOADING TEST	8.000 EA				
0210	501.235 ACOUSTIC MONITOR	70.000 CD				

CONTRACT ID: 012674.00 PROJECT(S): AC-BH-1267(400)
012674.10

CONTRACTOR :_____

LINE NO	ITEM DESCRIPTION	APPROX. QUANTITY AND UNITS	UNIT PRICE DOLLARS	UNIT PRICE CTS	BID AMOUNT DOLLARS	BID AMOUNT CTS
0220	501.50 STEEL H-BEAM PILES 89 LBS/FT, DELIVERED	500.000 LF				
0230	501.501 STEEL H-BEAM PILES 89 LBS/FT, IN PLACE	500.000 LF				
0240	501.54 STEEL H-BEAM PILES 117 LBS/FT, DELIVERED	2200.000 LF				
0250	501.541 STEEL H-BEAM PILES 117 LBS/FT, IN PLACE	2200.000 LF				
0260	501.55 DRIVING AND TESTING FRP COMPOSITE PILES	LUMP	LUMP			
0270	501.90 PILE TIPS	61.000 EA				
0280	501.91 PILE SPLICES	103.000 EA				
0290	501.92 PILE DRIVING EQUIPMENT MOBILIZATION	LUMP	LUMP			
0300	501.921 PILE DRIVING EQUIPMENT MOBILIZATION - PIERS	LUMP	LUMP			
0310	502.21 STRUCTURAL CONCRETE, ABUTMENTS AND RETAINING WALLS	116.000 CY				

CONTRACT ID: 012674.00 PROJECT(S): AC-BH-1267(400)
012674.10

CONTRACTOR :_____

LINE NO	ITEM DESCRIPTION	APPROX. QUANTITY AND UNITS	UNIT PRICE DOLLARS	UNIT PRICE CTS	BID AMOUNT DOLLARS	BID AMOUNT CTS
0320	502.219 STRUCTURAL CONCRETE, ABUTMENTS AND RETAINING WALLS	LUMP	LUMP			
0330	502.239 STRUCTURAL CONCRETE PIERS	LUMP	LUMP			
0340	502.24 STRUCTURAL CONCRETE PIERS (PLACED UNDER WATER)	2975.000 CY				
0350	502.249 STRUCTURAL CONCRETE PIERS (PLACED UNDER WATER)	LUMP	LUMP			
0360	502.26 STRUCTURAL CONCRETE ROADWAY AND SIDEWALK SLABS ON STEEL BRIDGES	LUMP	LUMP			
0370	502.31 STRUCTURAL CONCRETE APPROACH SLABS	LUMP	LUMP			
0380	502.49 STRUCTURAL CONCRETE CURBS AND SIDEWALKS	LUMP	LUMP			
0390	502.56 CONCRETE FILL	40.000 CY				
0400	502.703 FRP DOWNSPOUT	3.000 EA				
0410	502.72 FIBER REINFORCED POLYMER BRIDGE DRAIN - TYPE A	36.000 EA				

CONTRACT ID: 012674.00 PROJECT(S): AC-BH-1267(400)
012674.10

CONTRACTOR :_____

LINE NO	ITEM DESCRIPTION	APPROX. QUANTITY AND UNITS	UNIT PRICE DOLLARS	UNIT PRICE CTS	BID AMOUNT DOLLARS	BID AMOUNT CTS
0420	503.12 REINFORCING STEEL, FABRICATED AND DELIVERED	638500.000 LB				
0430	503.13 REINFORCING STEEL, PLACING	638500.000 LB				
0440	503.17 MECHANICAL WELDED SPLICE	546.000 EA				
0450	503.30 CORROSION RESISTANT REINFORCING SYSTEM, FABRICATED AND DELIVERED	26200.000 LB				
0460	503.31 CORROSION RESISTANT REINFORCING SYSTEM, PLACING	26200.000 LB				
0470	504.702 STRUCTURAL STEEL FABRICATED AND DELIVERED, WELDED	LUMP	LUMP			
0480	504.71 STRUCTURAL STEEL ERECTION	LUMP	LUMP			
0490	505.08 SHEAR CONNECTORS	LUMP	LUMP			
0500	507.0836 MAINE SCENIC BRIDGE RAILING, 3 BAR	LUMP	LUMP			
0510	508.14 HIGH PERFORMANCE WATERPROOFING MEMBRANE	LUMP	LUMP			

CONTRACT ID: 012674.00 PROJECT(S): AC-BH-1267(400)
012674.10

CONTRACTOR :_____

LINE NO	ITEM DESCRIPTION	APPROX. QUANTITY AND UNITS	UNIT PRICE DOLLARS	UNIT PRICE CTS	BID AMOUNT DOLLARS	BID AMOUNT CTS
0520	511.07 COFFERDAM: PIER NO.1	LUMP	LUMP			
0530	511.07 COFFERDAM: PIER NO.2	LUMP	LUMP			
0540	511.07 COFFERDAM: PIER NO.3	LUMP	LUMP			
0550	511.07 COFFERDAM: PIER NO.4	LUMP	LUMP			
0560	511.07 COFFERDAM: PIER NO.5	LUMP	LUMP			
0570	511.07 COFFERDAM: PIER NO.6	LUMP	LUMP			
0580	512.08 FRENCH DRAINS	950.000 LF				
0590	512.081 FRENCH DRAINS	LUMP	LUMP			
0600	515.21 PROTECTIVE COATING FOR CONCRETE SURFACES	LUMP	LUMP			
0610	521.23 EXPANSION DEVICE FINGER JOINT ABUT NO.2	1.000 EA				
0620	521.23 EXPANSION DEVICE FINGER JOINT PIER NO.1	1.000 EA				

CONTRACT ID: 012674.00 PROJECT(S): AC-BH-1267(400)
012674.10

CONTRACTOR :_____

LINE NO	ITEM DESCRIPTION	APPROX. QUANTITY AND UNITS	UNIT PRICE DOLLARS	UNIT PRICE CTS	BID AMOUNT DOLLARS	BID AMOUNT CTS
0630	523.52 BEARING INSTALLATION	36.000 EA				
0640	523.5401 LAMINATED ELASTOMERIC BEARINGS, FIXED	4.000 EA				
0650	523.5402 LAMINATED ELASTOMERIC BEARINGS, EXPANSION	4.000 EA				
0660	523.5551 POT OR DISC BEARINGS, FIXED	12.000 EA				
0670	523.5552 POT OR DISC BEARINGS, EXPANSION	16.000 EA				
0680	526.301 TEMPORARY CONCRETE BARRIER TYPE I	LUMP	LUMP			
0690	526.34 PERMANENT CONCRETE TRANSITION BARRIER	2.000 EA				
0700	526.3401 PERMANENT CONCRETE TRANSITION BARRIER - MODIFIED	2.000 EA				
0710	527.303 ENERGY ABSORBING SYSTEM (ET-PLUS)	3.000 EA				
0720	603.17 18 INCH CULVERT PIPE OPTION I	176.000 LF				
0730	603.189 21 INCH CULVERT PIPE OPTION III	122.000 LF				

CONTRACT ID: 012674.00 PROJECT(S): AC-BH-1267(400)
012674.10

CONTRACTOR :_____

LINE NO	ITEM DESCRIPTION	APPROX. QUANTITY AND UNITS	UNIT PRICE DOLLARS	UNIT PRICE CTS	BID AMOUNT DOLLARS	BID AMOUNT CTS
0740	603.19 24 INCH CULVERT PIPE OPTION I	18.000 LF				
0750	603.199 24 INCH CULVERT PIPE OPTION III	174.000 LF				
0760	605.09 6 INCH UNDERDRAIN TYPE B	460.000 LF				
0770	605.10 6 INCH UNDERDRAIN OUTLET	70.000 LF				
0780	606.1721 BRIDGE TRANSITION - TYPE 1	4.000 EA				
0790	606.23 GUARDRAIL TYPE 3C - SINGLE RAIL	913.000 LF				
0800	606.231 GUARDRAIL TYPE 3C - 15 FOOT RADIUS AND LESS	25.000 LF				
0810	606.232 GUARDRAIL TYPE 3C - OVER 15 FOOT RADIUS	100.000 LF				
0820	606.265 TERMINAL END - SINGLE RAIL - GALVANIZED STEEL	1.000 EA				
0830	606.353 REFLECTORIZED FLEXIBLE GUARDRAIL MARKER	12.000 EA				
0840	606.356 UNDERDRAIN DELINEATOR POST	1.000 EA				

CONTRACT ID: 012674.00 PROJECT(S): AC-BH-1267(400)
012674.10

CONTRACTOR :_____

LINE NO	ITEM DESCRIPTION	APPROX. QUANTITY AND UNITS	UNIT PRICE DOLLARS	UNIT PRICE CTS	BID AMOUNT DOLLARS	BID AMOUNT CTS
0850	606.47 SINGLE WOOD POST	6.000 EA				
0860	606.79 GUARDRAIL 350 FLARED TERMINAL	2.000 EA				
0870	609.31 CURB TYPE 3	45.000 LF				
0880	610.08 PLAIN RIPRAP	1900.000 CY				
0890	610.18 STONE DITCH PROTECTION	530.000 CY				
0900	610.60 BARRIER BOULDERS	30.000 EA				
0910	613.319 EROSION CONTROL BLANKET	500.000 SY				
0920	615.07 LOAM	900.000 CY				
0930	618.1301 SEEDING METHOD NUMBER 1 - PLAN QUANTITY	26.000 UN				
0940	618.1401 SEEDING METHOD NUMBER 2 - PLAN QUANTITY	106.000 UN				
0950	618.143 SPECIAL SEED MIX:	31.000 UN				

CONTRACT ID: 012674.00 PROJECT(S): AC-BH-1267(400)
012674.10

CONTRACTOR :_____

LINE NO	ITEM DESCRIPTION	APPROX. QUANTITY AND UNITS	UNIT PRICE DOLLARS	UNIT PRICE CTS	BID AMOUNT DOLLARS	BID AMOUNT CTS
0960	619.1201 MULCH - PLAN QUANTITY	146.000 UN				
0970	619.1401 EROSION CONTROL MIX	1900.000 CY				
0980	620.58 EROSION CONTROL GEOTEXTILE	2600.000 SY				
0990	621.026 EVERGREEN TREES (3 FOOT - 4 FOOT) GROUP B	12.000 EA				
1000	621.043 EVERGREEN TREES (6 FOOT - 8 FOOT) GROUP A	18.000 EA				
1010	621.044 EVERGREEN TREES (6 FOOT - 8 FOOT) GROUP B	6.000 EA				
1020	621.047 EVERGREEN TREES (8 FOOT - 9 FOOT) GROUP B	6.000 EA				
1030	621.101 PLUG/ STARTER PLANT	500.000 EA				
1040	621.178 MEDIUM DECIDUOUS TREES (6 FOOT - 8 FOOT) GROUP A	6.000 EA				
1050	621.273 LARGE DECIDUOUS TREE (2 INCH - 2.50 INCH CALIPER) GROUP A	9.000 EA				

CONTRACT ID: 012674.00 PROJECT(S): AC-BH-1267(400)
012674.10

CONTRACTOR :_____

LINE NO	ITEM DESCRIPTION	APPROX. QUANTITY AND UNITS	UNIT PRICE DOLLARS	UNIT PRICE CTS	BID AMOUNT DOLLARS	BID AMOUNT CTS
1060	621.275 LARGE DECIDUOUS TREE (2 INCH - 2.50 INCH CALIPER) GROUP C	3.000 EA				
1070	621.531 DECIDUOUS SHRUBS (12"-18"CAL.) GROUP A	36.000 EA				
1080	621.54 DECIDUOUS SHRUBS (18 INCH - 24 INCH) GROUP A	36.000 EA				
1090	621.541 DECIDUOUS SHRUBS (18 INCH - 24 INCH) GROUP B	84.000 EA				
1100	621.542 DECIDUOUS SHRUBS (18 INCH - 24 INCH) GROUP C	24.000 EA				
1110	621.558 DECIDUOUS SHRUBS (4 FOOT - 5 FOOT) GROUP A	12.000 EA				
1120	621.80 ESTABLISHMENT PERIOD	LUMP	LUMP			
1130	627.733 4" WHITE OR YELLOW PAINTED PAVEMENT MARKING LINE	9150.000 LF				
1140	629.05 HAND LABOR, STRAIGHT TIME	160.000 HR				
1150	631.12 ALL PURPOSE EXCAVATOR (INCLUDING OPERATOR)	100.000 HR				
1160	631.13 BULLDOZER (INCLUDING OPERATOR)	100.000 HR				

CONTRACT ID: 012674.00 PROJECT(S): AC-BH-1267(400)
012674.10

CONTRACTOR :_____

LINE NO	ITEM DESCRIPTION	APPROX. QUANTITY AND UNITS	UNIT PRICE DOLLARS	UNIT PRICE CTS	BID AMOUNT DOLLARS	BID AMOUNT CTS
1170	631.171 TRUCK - SMALL (INCLUDING OPERATOR)	100.000 HR				
1180	631.172 TRUCK - LARGE (INCLUDING OPERATOR)	100.000 HR				
1190	631.22 FRONT END LOADER (INCLUDING OPERATOR)	100.000 HR				
1200	637.071 DUST CONTROL	LUMP	LUMP			
1210	638.02 NAVIGATION LIGHTS	LUMP	LUMP			
1220	639.18 FIELD OFFICE TYPE A	1.000 EA				
1230	641.103 WOOD PICNIC TABLE - RECTANGULAR 8'	3.000 EA				
1240	641.89 KIOSK	1.000 EA				
1250	641.93 PICNIC SHELTER	3.000 EA				
1260	645.51 SPECIAL SIGNING	LUMP	LUMP			
1270	652.312 TYPE III BARRICADE	10.000 EA				

CONTRACT ID: 012674.00 PROJECT(S): AC-BH-1267(400)
012674.10

CONTRACTOR :_____

LINE NO	ITEM DESCRIPTION	APPROX. QUANTITY AND UNITS	UNIT PRICE DOLLARS	UNIT PRICE CTS	BID AMOUNT DOLLARS	BID AMOUNT CTS
1280	652.33 DRUM	50.000 EA				
1290	652.34 CONE	60.000 EA				
1300	652.35 CONSTRUCTION SIGNS	300.000 SF				
1310	652.361 MAINTENANCE OF TRAFFIC CONTROL DEVICES	LUMP	LUMP			
1320	652.38 FLAGGER	2000.000 HR				
1330	656.75 TEMPORARY SOIL EROSION AND WATER POLLUTION CONTROL	LUMP	LUMP			
1340	659.10 MOBILIZATION	LUMP	LUMP			
1350	660.21 ON-THE-JOB TRAINING (BID)	6000.000 HR				
1360	853.10 BOAT	LUMP	LUMP			
1370	890.01 SPECIAL WORK #1 UTILITY CONDUIT	LUMP	LUMP			
	SECTION 0001 TOTAL					
	TOTAL BID					

CONTRACT AGREEMENT, OFFER & AWARD

AGREEMENT made on the date last signed below, by and between the State of Maine, acting through and by its Department of Transportation (Department), an agency of state government with its principal administrative offices located at Child Street, Augusta, Maine, with a mailing address at 16 State House Station, Augusta, Maine 04333-0016, and _____ a corporation or other legal entity organized under the laws of the State of _____, with its principal place of business located at _____ _____

The Department and the Contractor, in consideration of the mutual promises set forth in this Agreement (the "Contract"), hereby agree as follows:

A. The Work.

The Contractor agrees to complete all Work as specified or indicated in the Contract including Extra Work in conformity with the Contract, WIN **012674.00 & 012674.10**, for the **Maine Kennebec River Bridge Replacement & FRP Composite Pile Installation, Removal, and Testing** in the town of **Richmond**, County of **Sagadahoc** and in the town of **Dresden**, County of **Lincoln** Maine. The Work includes construction, maintenance during construction, warranty as provided in the Contract, and other incidental work.

The Contractor shall be responsible for furnishing all supervision, labor, equipment, tools supplies, permanent materials and temporary materials required to perform the Work including construction quality control including inspection, testing and documentation, all required documentation at the conclusion of the project, warranting its work and performing all other work indicated in the Contract.

The Department shall have the right to alter the nature and extent of the Work as provided in the Contract; payment to be made as provided in the same.

B. Time.

The Contractor agrees to complete all Work, except warranty work, on or before **December 31, 2015.** Further, the Department may deduct from moneys otherwise due the Contractor, not as a penalty, but as Liquidated Damages in accordance with Sections 107.7 and 107.8 of the State of Maine Department of Transportation Standard Specifications, Revision of December 2002 and related Special Provisions.

C. Price.

The quantities given in the Schedule of Items of the Bid Package will be used as the basis for determining the original Contract amount and for determining the amounts of the required Performance Surety Bond and Payment Surety Bond, and that the amount of this offer is _____

_____

$_____ Performance Bond and Payment Bond each being 100% of the amount of this Contract.

D. Contract.

This Contract, which may be amended, modified, or supplemented in writing only, consists of the Contract documents as defined in the Plans, Standard Specifications, Revision of December 2002, Standard Details Revision of December 2002 as updated through advertisement, Supplemental Specifications, Special Provisions, Contract Agreement; and Contract Bonds. It is agreed and understood that this Contract will be governed by the documents listed above.

E. Certifications.

By signing below, the Contractor hereby certifies that to the best of the Contractor's knowledge and belief:

1. All of the statements, representations, covenants, and/or certifications required or set forth in the Bid and the Bid Documents, including those in the Federal Contract Provisions Supplement, and the Contract are still complete and accurate as of the date of this Agreement.

2. The Contractor knows of no legal, contractual, or financial impediment to entering into this Contract.

3. The person signing below is legally authorized by the Contractor to sign this Contract on behalf of the Contractor and to legally bind the Contractor to the terms of the Contract.

F. Offer.

The undersigned, having carefully examined the site of work, the Plans, Standard Specifications Revision of December 2002, Standard Details Revision of December 2002 as updated through advertisement, Supplemental Specifications, Special Provisions, Contract Agreement; and Contract Bonds contained herein for construction of: **WIN 012674.00 & 012674.10 Maine Kennebec River Bridge Replacement & FRP Composite Pile Installation, Removal, and Testing**, State of Maine, on which bids will be received until the time specified in the "Notice to Contractors" do(es) hereby bid and offer to enter into this contract to supply all the materials, tools, equipment and labor to construct the whole of the Work in strict accordance with the terms and conditions of this Contract at the unit prices in the attached "Schedule of Items".

The Offeror agrees to perform the work required at the price specified above and in accordance with the bids provided in the attached "Schedule of Items" in strict accordance with the terms of this solicitation, and to provide the appropriate insurance and bonds if this offer is accepted by the Government in writing.

As Offeror also agrees:

First: To do any extra work, not covered by the attached "Schedule of Items", which may be ordered by the Resident, and to accept as full compensation the amount determined upon a "Force Account" basis as provided in the Standard Specifications, Revision of December 2002, and as addressed in the contract documents.

Second: That the bid bond at 5% of the bid amount or the official bank check, cashier's check, certificate of deposit or U. S. Postal Money Order in the amount given in the "Notice to Contractors", payable to the Treasurer of the State of Maine and accompanying this bid, shall be forfeited, as liquidated damages, if in case this bid is accepted, and the undersigned shall fail to abide by the terms and conditions of the offer and fail to furnish satisfactory insurance and Contract bonds under the conditions stipulated in the Specifications within 15 days of notice of intent to award the contract.

Third: To begin the Work as stated in Section 107.2 of the Standard Specifications Revision of December 2002 and complete the Work within the time limits given in the Special Provisions of this Contract.

Fourth: The Contractor will be bound to the Disadvantaged Business Enterprise (DBE) Requirements contained in the attached Notice (Additional Instructions to Bidders) and submit a completed Contractor's Disadvantaged Business Enterprise Utilization Plan with their bid.

Fifth: That this offer shall remain open for 30 calendar days after the date of opening of bids.

Sixth: The Bidder hereby certifies, to the best of its knowledge and belief that: the Bidder has not, either directly or indirectly, entered into any agreement, participated in any collusion, or otherwise taken any action in restraint of competitive bidding in connection with its bid, and its subsequent contract with the Department.

IN WITNESS WHEREOF, the Contractor, for itself, its successors and assigns, hereby execute two duplicate originals of this Agreement and thereby binds itself to all covenants, terms, and obligations contained in the Contract Documents.

CONTRACTOR

_____	_____
Date	(Signature of Legally Authorized Representative of the Contractor)
_____	_____
Witness	(Name and Title Printed)

G. Award.

Your offer is hereby accepted. This award consummates the Contract, and the documents referenced herein.

MAINE DEPARTMENT OF TRANSPORTATION

_____	_____
Date	By: David Bernhardt, Commissioner
_____	
Witness	

CONTRACT AGREEMENT, OFFER & AWARD

AGREEMENT made on the date last signed below, by and between the State of Maine, acting through and by its Department of Transportation (Department), an agency of state government with its principal administrative offices located at Child Street, Augusta, Maine, with a mailing address at 16 State House Station, Augusta, Maine 04333-0016, and _____ a corporation or other legal entity organized under the laws of the State of _____, with its principal place of business located at _____ _____

The Department and the Contractor, in consideration of the mutual promises set forth in this Agreement (the "Contract"), hereby agree as follows:

A. The Work.

The Contractor agrees to complete all Work as specified or indicated in the Contract including Extra Work in conformity with the Contract, WIN **012674.00 & 012674.10**, for the **Maine Kennebec River Bridge Replacement & FRP Composite Pile Installation, Removal, and Testing** in the town of **Richmond**, County of **Sagadahoc** and in the town of **Dresden**, County of **Lincoln** Maine. The Work includes construction, maintenance during construction, warranty as provided in the Contract, and other incidental work.

The Contractor shall be responsible for furnishing all supervision, labor, equipment, tools supplies, permanent materials and temporary materials required to perform the Work including construction quality control including inspection, testing and documentation, all required documentation at the conclusion of the project, warranting its work and performing all other work indicated in the Contract.

The Department shall have the right to alter the nature and extent of the Work as provided in the Contract; payment to be made as provided in the same.

B. Time.

The Contractor agrees to complete all Work, except warranty work, on or before **December 31, 2015.** Further, the Department may deduct from moneys otherwise due the Contractor, not as a penalty, but as Liquidated Damages in accordance with Sections 107.7 and 107.8 of the State of Maine Department of Transportation Standard Specifications, Revision of December 2002 and related Special Provisions.

C. Price.

The quantities given in the Schedule of Items of the Bid Package will be used as the basis for determining the original Contract amount and for determining the amounts of the required Performance Surety Bond and Payment Surety Bond, and that the amount of this offer is _____

_____

$_____ Performance Bond and Payment Bond each being 100% of the amount of this Contract.

D. Contract.

This Contract, which may be amended, modified, or supplemented in writing only, consists of the Contract documents as defined in the Plans, Standard Specifications, Revision of December 2002, Standard Details Revision of December 2002 as updated through advertisement, Supplemental Specifications, Special Provisions, Contract Agreement; and Contract Bonds. It is agreed and understood that this Contract will be governed by the documents listed above.

E. Certifications.

By signing below, the Contractor hereby certifies that to the best of the Contractor's knowledge and belief:

1. All of the statements, representations, covenants, and/or certifications required or set forth in the Bid and the Bid Documents, including those in the Federal Contract Provisions Supplement, and the Contract are still complete and accurate as of the date of this Agreement.

2. The Contractor knows of no legal, contractual, or financial impediment to entering into this Contract.

3. The person signing below is legally authorized by the Contractor to sign this Contract on behalf of the Contractor and to legally bind the Contractor to the terms of the Contract.

F. Offer.

The undersigned, having carefully examined the site of work, the Plans, Standard Specifications Revision of December 2002, Standard Details Revision of December 2002 as updated through advertisement, Supplemental Specifications, Special Provisions, Contract Agreement; and Contract Bonds contained herein for construction of: **WIN 012674.00 & 012674.10 Maine Kennebec River Bridge Replacement & FRP Composite Pile Installation, Removal, and Testing**, State of Maine, on which bids will be received until the time specified in the "Notice to Contractors" do(es) hereby bid and offer to enter into this contract to supply all the materials, tools, equipment and labor to construct the whole of the Work in strict accordance with the terms and conditions of this Contract at the unit prices in the attached "Schedule of Items".

The Offeror agrees to perform the work required at the price specified above and in accordance with the bids provided in the attached "Schedule of Items" in strict accordance with the terms of this solicitation, and to provide the appropriate insurance and bonds if this offer is accepted by the Government in writing.

As Offeror also agrees:

First: To do any extra work, not covered by the attached "Schedule of Items", which may be ordered by the Resident, and to accept as full compensation the amount determined upon a "Force Account" basis as provided in the Standard Specifications, Revision of December 2002, and as addressed in the contract documents.

Second: That the bid bond at 5% of the bid amount or the official bank check, cashier's check, certificate of deposit or U. S. Postal Money Order in the amount given in the "Notice to Contractors", payable to the Treasurer of the State of Maine and accompanying this bid, shall be forfeited, as liquidated damages, if in case this bid is accepted, and the undersigned shall fail to abide by the terms and conditions of the offer and fail to furnish satisfactory insurance and Contract bonds under the conditions stipulated in the Specifications within 15 days of notice of intent to award the contract.

Third: To begin the Work as stated in Section 107.2 of the Standard Specifications Revision of December 2002 and complete the Work within the time limits given in the Special Provisions of this Contract.

Fourth: The Contractor will be bound to the Disadvantaged Business Enterprise (DBE) Requirements contained in the attached Notice (Additional Instructions to Bidders) and submit a completed Contractor's Disadvantaged Business Enterprise Utilization Plan with their bid.

Fifth: That this offer shall remain open for 30 calendar days after the date of opening of bids.

Sixth: The Bidder hereby certifies, to the best of its knowledge and belief that: the Bidder has not, either directly or indirectly, entered into any agreement, participated in any collusion, or otherwise taken any action in restraint of competitive bidding in connection with its bid, and its subsequent contract with the Department.

IN WITNESS WHEREOF, the Contractor, for itself, its successors and assigns, hereby execute two duplicate originals of this Agreement and thereby binds itself to all covenants, terms, and obligations contained in the Contract Documents.

CONTRACTOR

_____	_____
Date	(Signature of Legally Authorized Representative of the Contractor)
_____	_____
Witness	(Name and Title Printed)

G. Award.

Your offer is hereby accepted. This award consummates the Contract, and the documents referenced herein.

MAINE DEPARTMENT OF TRANSPORTATION

_____	_____
Date	By: David Bernhardt, Commissioner
_____	
Witness	

CONTRACT AGREEMENT, OFFER & AWARD

AGREEMENT made on the date last signed below, by and between the State of Maine, acting through and by its Department of Transportation (Department), an agency of state government with its principal administrative offices located at Child Street Augusta, Maine, with a mailing address at 16 State House Station, Augusta, Maine 04333-0016, and **(Name of the firm bidding the job)** a corporation or other legal entity organized under the laws of the State of Maine, with its principal place of business located at **(address of the firm bidding the job)**

The Department and the Contractor, in consideration of the mutual promises set forth in this Agreement (the "Contract"), hereby agree as follows:

SAMPLE

A. The Work.

The Contractor agrees to complete all Work as specified or indicated in the Contract including Extra Work in conformity with the Contract, PIN No.**1224.00**, for the **Hot Mix Asphalt Overlay** in the town/city of **South Nowhere,** County of **Washington**, Maine. The Work includes construction, maintenance during construction, warranty as provided in the Contract, and other incidental work.

The Contractor shall be responsible for furnishing all supervision, labor, equipment, tools supplies, permanent materials and temporary materials required to perform the Work including construction quality control including inspection, testing and documentation, all required documentation at the conclusion of the project, warranting its work and performing all other work indicated in the Contract.

The Department shall have the right to alter the nature and extent of the Work as provided in the Contract; payment to be made as provided in the same.

B. Time.

The Contractor agrees to complete all Work, except warranty work, on or before **November 15, 2006.** Further, the Department may deduct from moneys otherwise due the Contractor, not as a penalty, but as Liquidated Damages in accordance with Sections 107.7 and 107.8 of the State of Maine Department of Transportation Standard Specifications, Revision of December 2002 and related Special Provisions.

C. Price.

The quantities given in the Schedule of Items of the Bid Package will be used as the basis for determining the original Contract amount and for determining the amounts of the required Performance Surety Bond and Payment Surety Bond, and that the amount of this offer is **____(Place bid here in alphabetical form such as One Hundred and Two dollars and 10 cents)** **$_ (repeat bid here in numerical terms, such as $102.10)**_____ Performance Bond and Payment Bond each being 100% of the amount of this Contract.

D. Contract.

This Contract, which may be amended, modified, or supplemented in writing only, consists of the Contract documents as defined in the Plans, Standard Specifications, Revision of December 2002, Standard Details Revision of December 2002, Supplemental Specifications, Special Provisions, Contract Agreement; and Contract Bonds. It is agreed and understood that this Contract will be governed by the documents listed above.

E. Certifications.

By signing below, the Contractor hereby certifies that to the best of the Contractor's knowledge and belief:

1. All of the statements, representations, covenants, and/or certifications required or set forth in the Bid and the Bid Documents, including those in Appendix A to Division 100 of the Standard Specifications Revision of December 2002 (Federal Contract Provisions Supplement), and the Contract are still complete and accurate as of the date of this Agreement.

2. The Contractor knows of no legal, contractual, or financial impediment to entering into this Contract.

3. The person signing below is legally authorized by the Contractor to sign this Contract on behalf of the Contractor and to legally bind the Contractor to the terms of the Contract.

SAMPLE

F. Offer.

The undersigned, having carefully examined the site of work, the Plans, Standard Specifications, Revision of December 2002, Standard Details Revision of December 2002, Supplemental Specifications, Special Provisions, Contract Agreement; and Contract Bonds contained herein for construction of:

PIN 1234.00 South Nowhere, Hot Mix Asphalt Overlay,

State of Maine, on which bids will be received until the time specified in the "Notice to Contractors" do(es) hereby bid and offer to enter into this contract to supply all the materials, tools, equipment and labor to construct the whole of the Work in strict accordance with the terms and conditions of this Contract at the unit prices in the attached "Schedule of Items".

The Offeror agrees to perform the work required at the price specified above and in accordance with the bids provided in the attached "Schedule of Items" in strict accordance with the terms of this solicitation, and to provide the appropriate insurance and bonds if this offer is accepted by the Government in writing.

As Offeror also agrees:

First: To do any extra work, not covered by the attached "Schedule of Items", which may be ordered by the Resident, and to accept as full compensation the amount determined upon a "Force Account" basis as provided in the Standard Specifications, Revision of December 2002, and as addressed in the contract documents.

Second: That the bid bond at 5% of the bid amount or the official bank check, cashier's check, certificate of deposit or U. S. Postal Money Order in the amount given in the "Notice to Contractors", payable to the Treasurer of the State of Maine and accompanying this bid, shall be forfeited, as liquidated damages, if in case this bid is accepted, and the undersigned shall fail to abide by the terms and conditions of the offer and fail to furnish satisfactory insurance and Contract bonds under the conditions stipulated in the Specifications within 15 days of notice of intent to award the contract.

Third: To begin the Work as stated in Section 107.2 of the Standard Specifications Revision of 2002 and complete the Work within the time limits given in the Special Provisions of this Contract.

Fourth: The Contractor will be bound to the Disadvantaged Business Enterprise (DBE) Requirements contained in the attached Notice (Additional Instructions to Bidders) and submit a completed Contractor's Disadvantaged Business Enterprise Utilization Plan with their bid.

Fifth: That this offer shall remain open for 30 calendar days after the date of opening of bids.

SAMPLE

Sixth: The Bidder hereby certifies, to the best of its knowledge and belief that: the Bidder has not, either directly or indirectly, entered into any agreement, participated in any collusion, or otherwise taken any action in restraint of competitive bidding in connection with its bid, and its subsequent contract with the Department.

IN WITNESS WHEREOF, the Contractor, for itself, its successors and assigns, hereby execute two duplicate originals of this Agreement and thereby binds itself to all covenants, terms, and obligations contained in the Contract Documents.

CONTRACTOR

_____	**(Sign Here)**
Date	(Signature of Legally Authorized Representative of the Contractor)
____(**Witness Sign Here)**	**(Print Name Here)**
Witness	(Name and Title Printed)

SAMPLE

G. Award.

Your offer is hereby accepted. This award consummates the Contract, and the documents referenced herein.

MAINE DEPARTMENT OF TRANSPORTATION

_____	_____
Date	By: David A. Cole, Commissioner

_____
(Witness)

BOND # _____

CONTRACT PERFORMANCE BOND
(Surety Company Form)

KNOW ALL MEN BY THESE PRESENTS: That _____ _____ **in the State of** _____, as principal, and……....., a corporation duly organized under the laws of the State of ..... and having a usual place of business ...., as Surety, are held and firmly bound unto the Treasurer of the State of Maine in the sum of _____ **and 00/100 Dollars ($)**, to be paid said Treasurer of the State of Maine or his successors in office, for which payment well and truly to be made, Principal and Surety bind themselves, their heirs, executors and administrators, successors and assigns, jointly and severally by these presents.

The condition of this obligation is such that if the Principal designated as Contractor in the Contract to construct Project Number _____ in the Municipality of _____ promptly and faithfully performs the Contract, then this obligation shall be null and void; otherwise it shall remain in full force and effect.

The Surety hereby waives notice of any alteration or extension of time made by the State of Maine.

Signed and sealed this ..... day of ....., 20….. .

WITNESSES:	SIGNATURES:
	CONTRACTOR:
Signature.....	.....….....
Print Name Legibly	Print Name Legibly ...….....
	SURETY:
Signature	....….....
Print Name Legibly	Print Name Legibly .....
SURETY ADDRESS:	NAME OF LOCAL AGENCY:
.....	ADDRESS .....
.....	...…….....
.....	.....…….....
TELEPHONE.....	.....…….....

SAMPLE

BOND # _____

CONTRACT PAYMENT BOND
(Surety Company Form)

KNOW ALL MEN BY THESE PRESENTS: That _____ _____ **in the State of** _____, as principal, and.....….....
a corporation duly organized under the laws of the State of ..... and having a usual place of business in .....……., as Surety, are held and firmly bound unto the Treasurer of the State of Maine for the use and benefit of claimants as herein below defined, in the sum of _____ **and 00/100 Dollars ($)** for the payment whereof Principal and Surety bind themselves, their heirs, executors and administrators, successors and assigns, jointly and severally by these presents.

The condition of this obligation is such that if the Principal designated as Contractor in the Contract to construct Project Number _____ in the Municipality of _____ promptly satisfies all claims and demands incurred for all labor and material, used or required by him in connection with the work contemplated by said Contract, and fully reimburses the obligee for all outlay and expense which the obligee may incur in making good any default of said Principal, then this obligation shall be null and void; otherwise it shall remain in full force and effect.

A claimant is defined as one having a direct contract with the Principal or with a Subcontractor of the Principal for labor, material or both, used or reasonably required for use in the performance of the contract.

Signed and sealed this ..... day of ...……....., 20 ... .

WITNESS:	SIGNATURES:
	CONTRACTOR:
Signature…….....	.....….....
Print Name Legibly .....……..	Print Name Legibly ….....
	SURETY:
Signature.....	...….....
Print Name Legibly	Print Name Legibly ….....
SURETY ADDRESS:	NAME OF LOCAL AGENCY:
...….....	ADDRESS ….....
.....	…….....
TELEPHONE	…….....

SAMPLE

Maine DOT Map

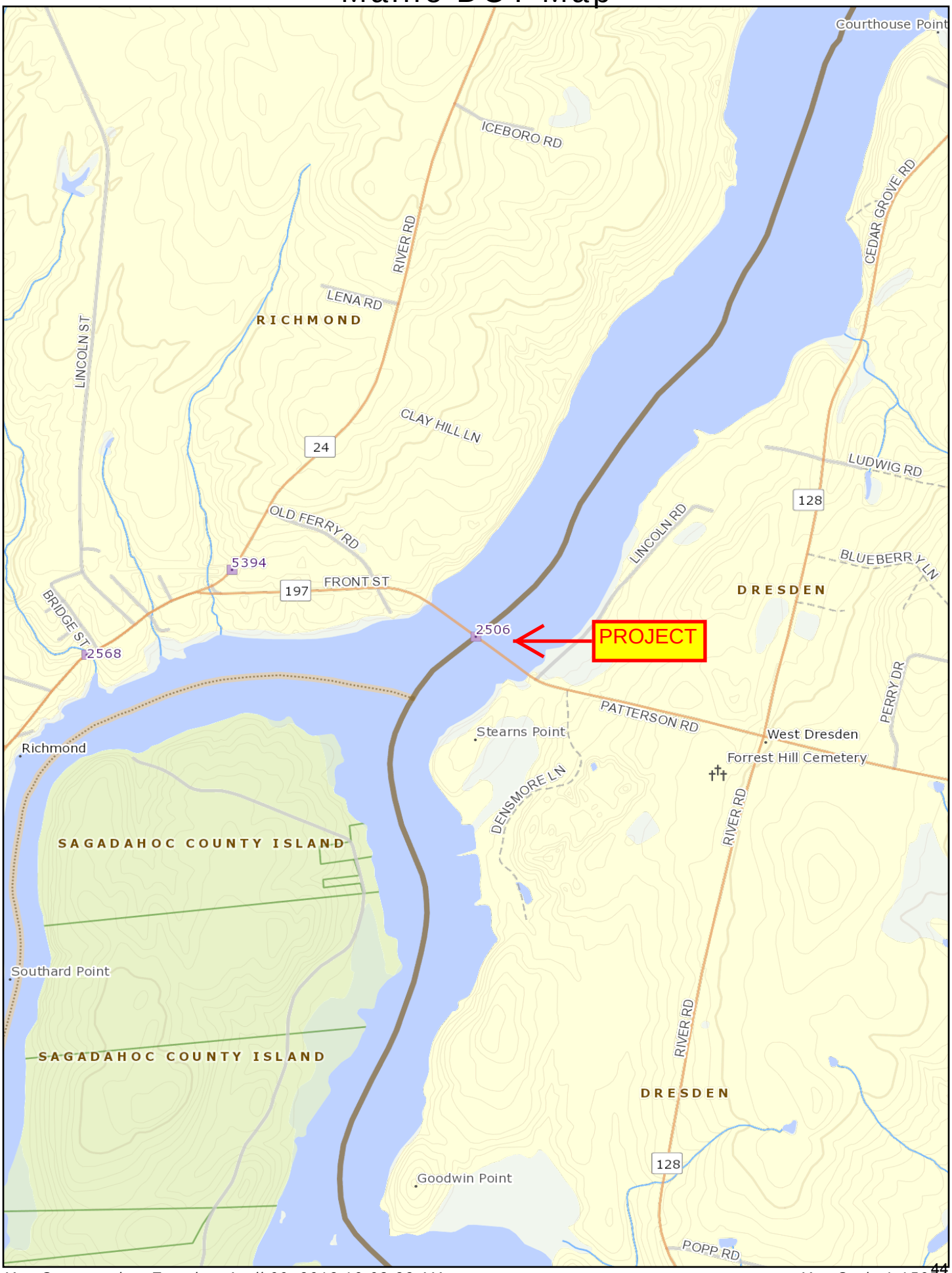

Map Generated on Tuesday, April 09, 2013 10:08:33 AM *Map Scale 1:15071*

The Maine Department of Transportation provides this publication for information only. Reliance upon this information is at user risk. It is subject to revision and may be incomplete depending upon changing conditions. The Department assumes no liability if injuries or damages result from this information. This map is not intended to support emergency dispatch. Road names used on this map may not match official road names.

General Decision Number: ME130043 01/04/2013 ME43

Superseded General Decision Number: ME20120043

State: Maine

Construction Type: Highway

County: Lincoln County in Maine.

HIGHWAY CONSTRUCTION PROJECTS (excluding tunnels, building structures in rest area projects & railroad construction; bascule, suspension & spandrel arch bridges designed for commercial navigation, bridges involving marine construction; and other major bridges).

Modification Number	Publication Date
0	01/04/2013

SUME2011-038 09/14/2011

	Rates	Fringes
CARPENTER, Includes Form Work....	$ 18.34	2.84
INSTALLER - GUARDRAIL.....	$ 10.00	0.00
IRONWORKER, REINFORCING.....	$ 18.98	0.00
LABORER: Asphalt Raker.....	$ 14.71	2.95
LABORER: Common or General.....	$ 12.86	1.38
LABORER: Flagger.....	$ 9.55	0.00
LABORER: Landscape.....	$ 14.79	1.76
LABORER: Pipelayer.....	$ 14.40	1.87
LABORER: Traffic Control-Device Monitor.....	$ 14.80	6.29
OPERATOR: Asphalt Roller.....	$ 18.49	10.24
OPERATOR: Backhoe.....	$ 14.51	2.95
OPERATOR: Bobcat/Skid Steer/Skid Loader.....	$ 16.73	5.57
OPERATOR: Bulldozer.....	$ 16.95	1.94
OPERATOR: Cold Planer.....	$ 17.63	0.00

OPERATOR: Crane.....$ 20.99 6.40

OPERATOR: Excavator.....$ 16.89 2.04

OPERATOR: Grader/Blade.....$ 18.63 3.29

OPERATOR: Loader.....$ 15.36 2.33

OPERATOR: Mechanic.....$ 19.30 7.60

OPERATOR: Milling Machine
Reclaimer Combo.....$ 13.00 0.80

OPERATOR: Paver.....$ 20.22 7.99

OPERATOR: Screed.....$ 16.92 5.36

OPERATOR: Roller (Earth).....$ 15.74 2.47

TRUCK DRIVER, Includes All
Dump Trucks.....$ 13.24 1.66

TRUCK DRIVER: Semi-Trailer
Truck.....$ 16.36 9.09

TRUCK DRIVER: 1, 2, 3 Axle
Truck.....$ 16.32 7.79

---

* TEAM0340-001 08/01/2012

	Rates	Fringes
TRUCK DRIVER		
Low Boy	$ 14.75	17.0725

WELDERS - Receive rate prescribed for craft performing operation to which welding is incidental.

==========

Unlisted classifications needed for work not included within the scope of the classifications listed may be added after award only as provided in the labor standards contract clauses (29CFR 5.5 (a) (1) (ii)).

The body of each wage determination lists the classification and wage rates that have been found to be prevailing for the cited type(s) of construction in the area covered by the wage

determination. The classifications are listed in alphabetical order of "identifiers" that indicate whether the particular rate is union or non-union.

Union Identifiers

An identifier enclosed in dotted lines beginning with characters other than "SU" denotes that the union classification and rate have found to be prevailing for that classification. Example: PLUM0198-005 07/01/2011. The first four letters , PLUM, indicate the international union and the four-digit number, 0198, that follows indicates the local union number or district council number where applicable , i.e., Plumbers Local 0198. The next number, 005 in the example, is an internal number used in processing the wage determination. The date, 07/01/2011, following these characters is the effective date of the most current negotiated rate/collective bargaining agreement which would be July 1, 2011 in the above example.

Union prevailing wage rates will be updated to reflect any changes in the collective bargaining agreements governing the rates.

0000/9999: weighted union wage rates will be published annually each January.

Non-Union Identifiers

Classifications listed under an "SU" identifier were derived from survey data by computing average rates and are not union rates; however, the data used in computing these rates may include both union and non-union data. Example: SULA2004-007 5/13/2010. SU indicates the rates are not union majority rates, LA indicates the State of Louisiana; 2004 is the year of the survey; and 007 is an internal number used in producing the wage determination. A 1993 or later date, 5/13/2010, indicates the classifications and rates under that identifier were issued as a General Wage Determination on that date.

Survey wage rates will remain in effect and will not change until a new survey is conducted.

WAGE DETERMINATION APPEALS PROCESS

1.) Has there been an initial decision in the matter? This can be:

* an existing published wage determination
* a survey underlying a wage determination
* a Wage and Hour Division letter setting forth a position on a wage determination matter
* a conformance (additional classification and rate) ruling

On survey related matters, initial contact, including requests for summaries of surveys, should be with the Wage and Hour Regional Office for the area in which the survey was conducted because those Regional Offices have responsibility for the Davis-Bacon survey program. If the response from this initial contact is not satisfactory, then the process described in 2.) and 3.) should be followed.

With regard to any other matter not yet ripe for the formal process described here, initial contact should be with the Branch of Construction Wage Determinations. Write to:

Branch of Construction Wage Determinations
Wage and Hour Division
U.S. Department of Labor
200 Constitution Avenue, N.W.
Washington, DC 20210

2.) If the answer to the question in 1.) is yes, then an interested party (those affected by the action) can request review and reconsideration from the Wage and Hour Administrator (See 29 CFR Part 1.8 and 29 CFR Part 7). Write to:

Wage and Hour Administrator
U.S. Department of Labor
200 Constitution Avenue, N.W.
Washington, DC 20210

The request should be accompanied by a full statement of the interested party's position and by any information (wage payment data, project description, area practice material, etc.) that the requestor considers relevant to the issue.

3.) If the decision of the Administrator is not favorable, an interested party may appeal directly to the Administrative Review Board (formerly the Wage Appeals Board). Write to:

Administrative Review Board
U.S. Department of Labor
200 Constitution Avenue, N.W.
Washington, DC 20210

4.) All decisions by the Administrative Review Board are final.

==========

END OF GENERAL DECISION

General Decision Number: ME130052 01/04/2013 ME52

Superseded General Decision Number: ME20120052

State: Maine

Construction Type: Highway

County: Sagadahoc County in Maine.

HIGHWAY CONSTRUCTION PROJECTS (excluding tunnels, building structures in rest area projects & railroad construction; bascule, suspension & spandrel arch bridges designed for commercial navigation, bridges involving marine construction; and other major bridges).

Modification Number	Publication Date
0	01/04/2013

* ENGI0004-006 06/01/2012

	Rates	Fringes
POWER EQUIPMENT OPERATOR:		
Milling Machine	$ 25.73	23.27

---

* IRON0007-008 04/02/2012

	Rates	Fringes
IRONWORKER, REINFORCING	$ 21.62	19.72

---

* SUME2011-047 09/14/2011

	Rates	Fringes
CARPENTER, Includes Form Work	$ 17.10	1.95
CEMENT MASON/CONCRETE FINISHER	$ 16.94	0.00
ELECTRICIAN	$ 21.41	3.40
INSTALLER - GUARDRAIL	$ 15.91	2.85
IRONWORKER, STRUCTURAL	$ 18.75	4.56
LABORER: Asphalt Raker	$ 15.43	1.09
LABORER: Common or General	$ 12.25	1.73
LABORER: Flagger	$ 9.03	0.00
LABORER: Landscape	$ 15.43	2.09

LABORER: Wheelman.....$ 18.76 4.93

OPERATOR: Backhoe.....$ 17.92 2.44

OPERATOR: Bobcat/Skid
Steer/Skid Loader.....$ 16.98 4.65

OPERATOR: Bulldozer.....$ 17.95 3.81

OPERATOR: Crane.....$ 21.28 0.00

OPERATOR: Excavator.....$ 17.81 3.13

OPERATOR: Grader/Blade.....$ 27.40 8.46

OPERATOR: Loader.....$ 16.81 4.32

OPERATOR: Mechanic.....$ 22.21 6.09

OPERATOR: Milling Machine
Reclaimer Combo.....$ 24.77 8.39

OPERATOR: Paver.....$ 18.08 4.89

OPERATOR: Roller excluding
Asphalt.....$ 15.79 3.32

OPERATOR: Screed.....$ 19.58 5.95

OPERATOR: Sweeper.....$ 14.08 0.00

PILEDRIVERMAN.....$ 19.95 5.26

TRUCK DRIVER, Includes all
axles including Dump Trucks.....$ 9.90 3.10

TRUCK DRIVER: Lowboy Truck.....$ 15.15 5.62

WELDERS - Receive rate prescribed for craft performing operation to which welding is incidental.

==========

Unlisted classifications needed for work not included within the scope of the classifications listed may be added after award only as provided in the labor standards contract clauses (29CFR 5.5 (a) (1) (ii)).

The body of each wage determination lists the classification

and wage rates that have been found to be prevailing for the cited type(s) of construction in the area covered by the wage determination. The classifications are listed in alphabetical order of "identifiers" that indicate whether the particular rate is union or non-union.

Union Identifiers

An identifier enclosed in dotted lines beginning with characters other than "SU" denotes that the union classification and rate have found to be prevailing for that classification. Example: PLUM0198-005 07/01/2011. The first four letters , PLUM, indicate the international union and the four-digit number, 0198, that follows indicates the local union number or district council number where applicable , i.e., Plumbers Local 0198. The next number, 005 in the example, is an internal number used in processing the wage determination. The date, 07/01/2011, following these characters is the effective date of the most current negotiated rate/collective bargaining agreement which would be July 1, 2011 in the above example.

Union prevailing wage rates will be updated to reflect any changes in the collective bargaining agreements governing the rates.

0000/9999: weighted union wage rates will be published annually each January.

Non-Union Identifiers

Classifications listed under an "SU" identifier were derived from survey data by computing average rates and are not union rates; however, the data used in computing these rates may include both union and non-union data. Example: SULA2004-007 5/13/2010. SU indicates the rates are not union majority rates, LA indicates the State of Louisiana; 2004 is the year of the survey; and 007 is an internal number used in producing the wage determination. A 1993 or later date, 5/13/2010, indicates the classifications and rates under that identifier were issued as a General Wage Determination on that date.

Survey wage rates will remain in effect and will not change until a new survey is conducted.

WAGE DETERMINATION APPEALS PROCESS

1.) Has there been an initial decision in the matter? This can be:

* an existing published wage determination
* a survey underlying a wage determination
* a Wage and Hour Division letter setting forth a position on a wage determination matter
* a conformance (additional classification and rate) ruling

On survey related matters, initial contact, including requests for summaries of surveys, should be with the Wage and Hour Regional Office for the area in which the survey was conducted because those Regional Offices have responsibility for the Davis-Bacon survey program. If the response from this initial contact is not satisfactory, then the process described in 2.) and 3.) should be followed.

With regard to any other matter not yet ripe for the formal process described here, initial contact should be with the Branch of Construction Wage Determinations. Write to:

Branch of Construction Wage Determinations
Wage and Hour Division
U.S. Department of Labor
200 Constitution Avenue, N.W.
Washington, DC 20210

2.) If the answer to the question in 1.) is yes, then an interested party (those affected by the action) can request review and reconsideration from the Wage and Hour Administrator (See 29 CFR Part 1.8 and 29 CFR Part 7). Write to:

Wage and Hour Administrator
U.S. Department of Labor
200 Constitution Avenue, N.W.
Washington, DC 20210

The request should be accompanied by a full statement of the interested party's position and by any information (wage payment data, project description, area practice material, etc.) that the requestor considers relevant to the issue.

3.) If the decision of the Administrator is not favorable, an interested party may appeal directly to the Administrative Review Board (formerly the Wage Appeals Board). Write to:

Administrative Review Board
U.S. Department of Labor
200 Constitution Avenue, N.W.
Washington, DC 20210

4.) All decisions by the Administrative Review Board are final.

==========

END OF GENERAL DECISION

U.S. Department of Homeland Security
United States Coast Guard

BRIDGE PERMIT

FEB 27 2013

(2-13-1)

WHEREAS by Title V of an act of Congress approved August 2, 1946, entitled "General Bridge Act of 1946," as amended (33 U.S.C. 525-533), the consent of Congress was granted for the construction, maintenance and operation of bridges and approaches thereto over the navigable waters of the United States;

AND WHEREAS the Secretary of Homeland Security has delegated the authority of Section 502(b) of that act to the Commandant, U. S. Coast Guard by Department of Homeland Security Delegation Number: 0170.1;

AND WHEREAS before construction is commenced, the Commandant must approve the location and plans of any such bridge and may impose any specific conditions relating to the construction, maintenance and operation of the structure deemed necessary in the interest of public navigation, such conditions to have the force of law;

AND WHEREAS the Commandant of the Coast Guard has further delegated to the District Commanders, by Section 1.01-60(b) of Title 33, Code of Federal Regulations, authority to issue permits for the construction, reconstruction, or alteration of bridges across navigable waters of the United States;

AND WHEREAS the – **STATE OF MAINE** – has submitted for approval the location and plans of a bridge to be constructed across the Kennebec River between Richmond and Dresden, Maine;

NOW THEREFORE, This is to certify that the location and plans dated December 12, 2012 are hereby approved by the Commander, First Coast Guard District, subject to the following conditions:

1. No deviation from the approved plans may be made either before or after completion of the structure unless the modification of said plans has previously been submitted to and received the approval of the District Commander.

Replacement of the Maine-Kennebec Bridge across Kennebec River between Richmond and Dresden, Maine (2-13-1)

2. The construction of falsework, cofferdams or other obstructions, if required, shall be in accordance with plans submitted to and approved by the Commander, First Coast Guard District, prior to construction of the bridge. All work shall be so conducted that the free navigation of the waterway is not unreasonably interfered with and the present navigable depths are not impaired. Timely notice of any and all events that may affect navigation shall be given to the District Commander during construction of the bridge. Methods shall be employed to ensure that there will be no increase of sedimentation and turbidity in the waterway during construction. The channel or channels through the structure shall be promptly cleared of all obstructions placed therein or caused by the construction of the bridge to the satisfaction of the District Commander, when in the judgment of the District Commander the construction work has reached a point where such action should be taken.

3. Issuance of this permit does not relieve the permittee of the obligation or responsibility for compliance with the provisions of any other law or regulation as may be under the jurisdiction of the U.S. Army Corps of Engineers, New England District; U.S. Department of Commerce, National Marine Fisheries Service; State of Maine: Department of Environmental Protection or any federal, state or local authority having cognizance of any aspect of the location, construction or maintenance of said bridge.

4. A pier protection fendering system shall be installed and maintained in good condition by and at the expense of the owner of the bridge when so required by the District Commander. Said installation and maintenance shall be installed for the safety of navigation and be in accordance with plans submitted to and approved by the District Commander prior to its construction.

5. Clearance gauges shall be installed and maintained in a good and legible condition by and at the expense of the owner of the bridge when so required by the District Commander. The type of gauges and the locations in which they are to be installed will be submitted to the District Commander for approval.

6. All parts of the existing to-be-replaced Maine-Kennebec Bridge across the Kennebec River, mile 26.2, not utilized in the new bridge shall be removed down to a minimum of one foot below the natural bottom of the waterway except bridge piers 4, 5 and 6 and the two swing span support dolphins, which will be removed to elevation -22.69 or one foot below the natural bottom of the waterway, whichever is lower. The waterway shall be cleared to the satisfaction of the District Commander when in the judgment of the District Commander the construction of the new bridge, mile 26.2, has reached a point where such action should be taken.

Replacement of the Maine-Kennebec Bridge across the Kennebec River between Richmond and Dresden, Maine **(2-13-1)**

7. When the proposed bridge is no longer used for transportation purposes, it shall be removed in its entirety or to an elevation deemed appropriate by the District Commander and the waterway cleared to the satisfaction of the District Commander. Such removal and clearance shall be completed by and at the expense of the owner of the bridge upon due notice from the District Commander.

8. The approval hereby granted shall cease and be null and void unless construction of the bridge is commenced within three years and completed within five years after the date of this permit.

DANIEL B. ABEL
Rear Admiral, U.S. Coast Guard
Commander, First Coast Guard District

STATE OF MAINE
Nathaniel D. Benoit
Nat Benoit
10651
2/4/13
LICENSED
PROFESSIONAL ENGINEER

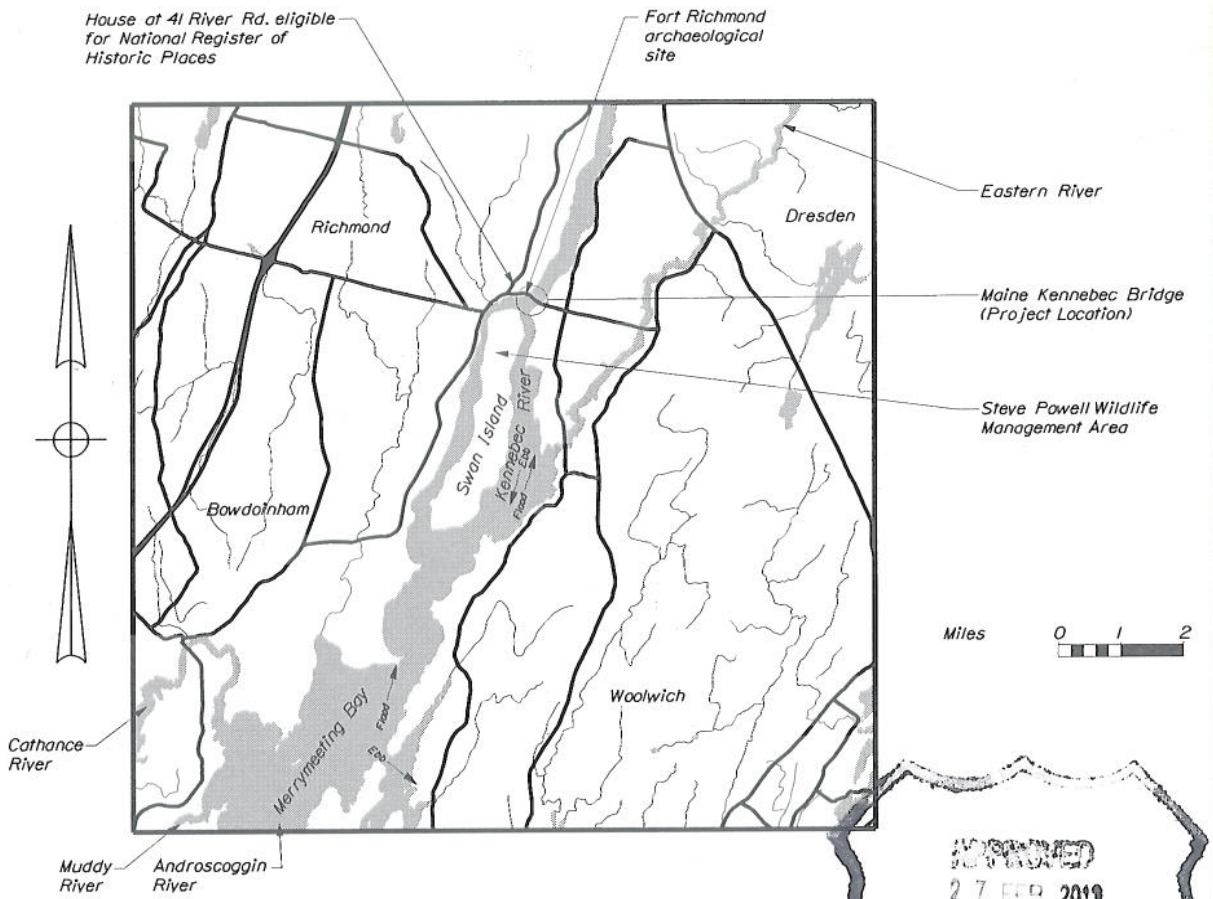

RECEIVED
27 FEB 2013
P(2-13-1)
B.G.
DOCKET CLERK

STATE OF MAINE DEPARTMENT OF TRANSPORTATION	MAINE KENNEBEC BRIDGE (RIVER MILE 26.2) KENNEBEC RIVER RICHMOND\DRESDEN SAGADAHOC\LINCOLN	SHEET NUMBER 1 OF 7
AC-BH-1267(400) December 12, 2012 BRIDGE NO. 2506	VICINITY PLAN	

STATE OF MAINE
Nathaniel D. Benoit
10651
LICENSED
PROFESSIONAL ENGINEER
2/4/13

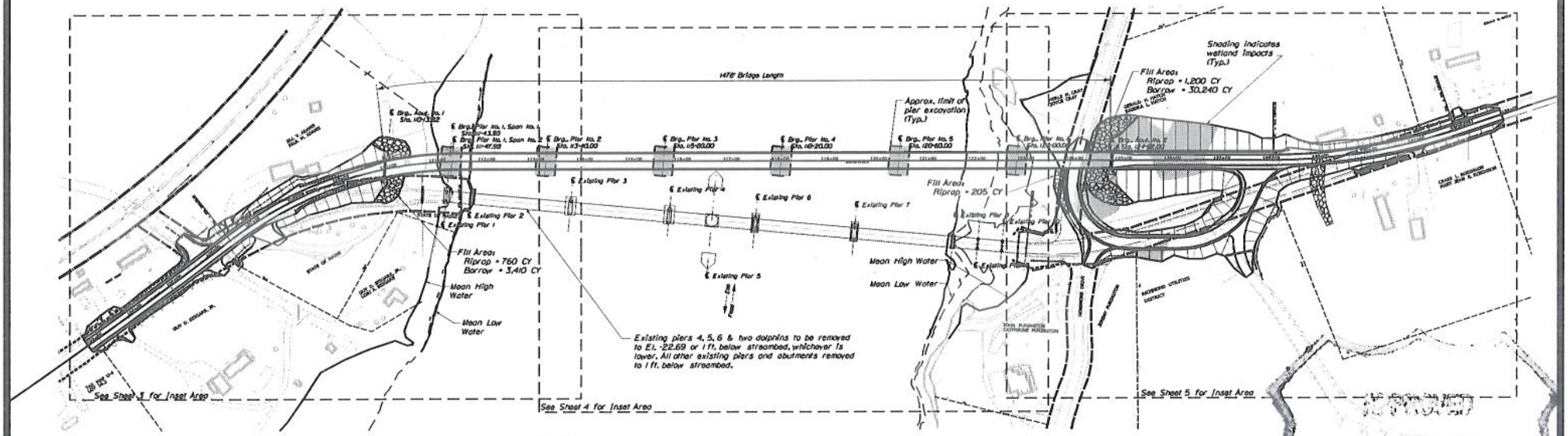

PLAN

Feet 100 0 100 200

All elevations based on NAVD 1988

APPROVED
27 FEB 2013
P (2-13-1)
U.S. COAST GUARD

Notes:
1) 7,800 CY total pier excavation

STATE OF MAINE DEPARTMENT OF TRANSPORTATION	MAINE KENNEBEC BRIDGE (RIVER MILE 26.2) KENNEBEC RIVER RICHMOND\DRESDEN SAGADAHOC\LINCOLN	SHEET NUMBER 2
AC-BH-1267(400) December 12, 2012 BRIDGE NO. 2506	BRIDGE PLAN	OF 7

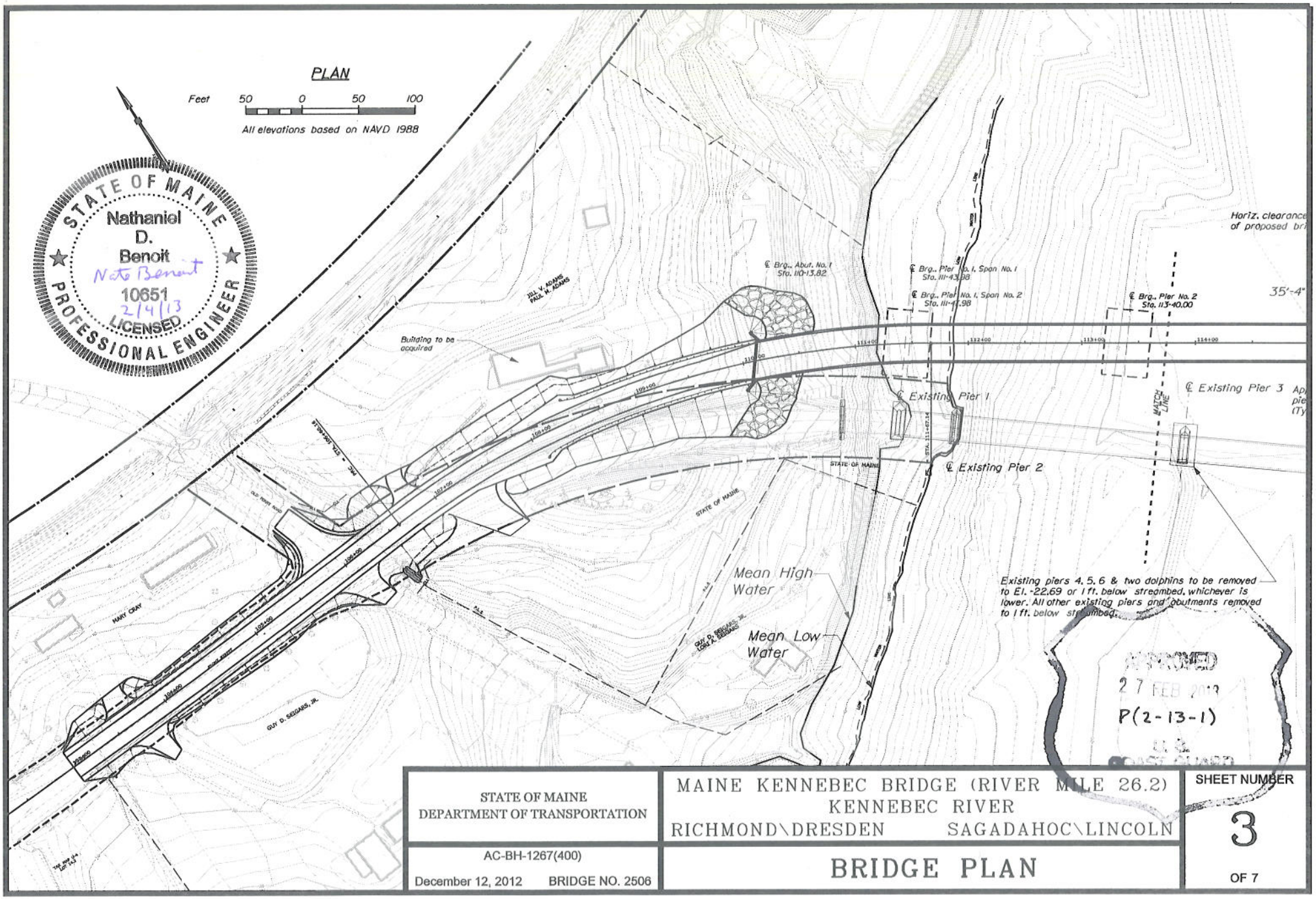
PLAN
Feet 50 0 50 100
All elevations based on NAVD 1988
STATE OF MAINE
Nathaniel D. Benoit
Nate Benoit
10651
2/4/13
LICENSED
PROFESSIONAL ENGINEER
Building to be acquired
JILL V. ADAMS
PAUL W. ADAMS
℄ Brg., Abut. No. 1 Sta. 110+13.82
℄ Brg., Pier No. 1, Span No. 1 Sta. 111+43.98
℄ Brg., Pier No. 1, Span No. 2 Sta. 111+11.98
℄ Brg., Pier No. 2 Sta. 113+40.00
Horiz. clearance of proposed bri
35'-4"
℄ Existing Pier 1
℄ Existing Pier 2
℄ Existing Pier 3
MATCH LINE
STATE OF MAINE
Mean High Water
Mean Low Water
Existing piers 4, 5, 6 & two dolphins to be removed to El. -22.69 or 1 ft. below streambed, whichever is lower. All other existing piers and abutments removed to 1 ft. below streambed.
APPROVED
27 FEB 2013
P(2-13-1)
U.S. COAST GUARD
HARY CRAY
GUY D. SEGARS, JR.
GUY D. SEGARS, JR.
LORI A. SEGARS
OLD FERRY ROAD
STA. 108+80.13
PIC = 3+44
STATE OF MAINE
DEPARTMENT OF TRANSPORTATION
MAINE KENNEBEC BRIDGE (RIVER MILE 26.2)
KENNEBEC RIVER
RICHMOND\DRESDEN SAGADAHOC\LINCOLN
SHEET NUMBER
3
OF 7
AC-BH-1267(400)
December 12, 2012 BRIDGE NO. 2506
BRIDGE PLAN

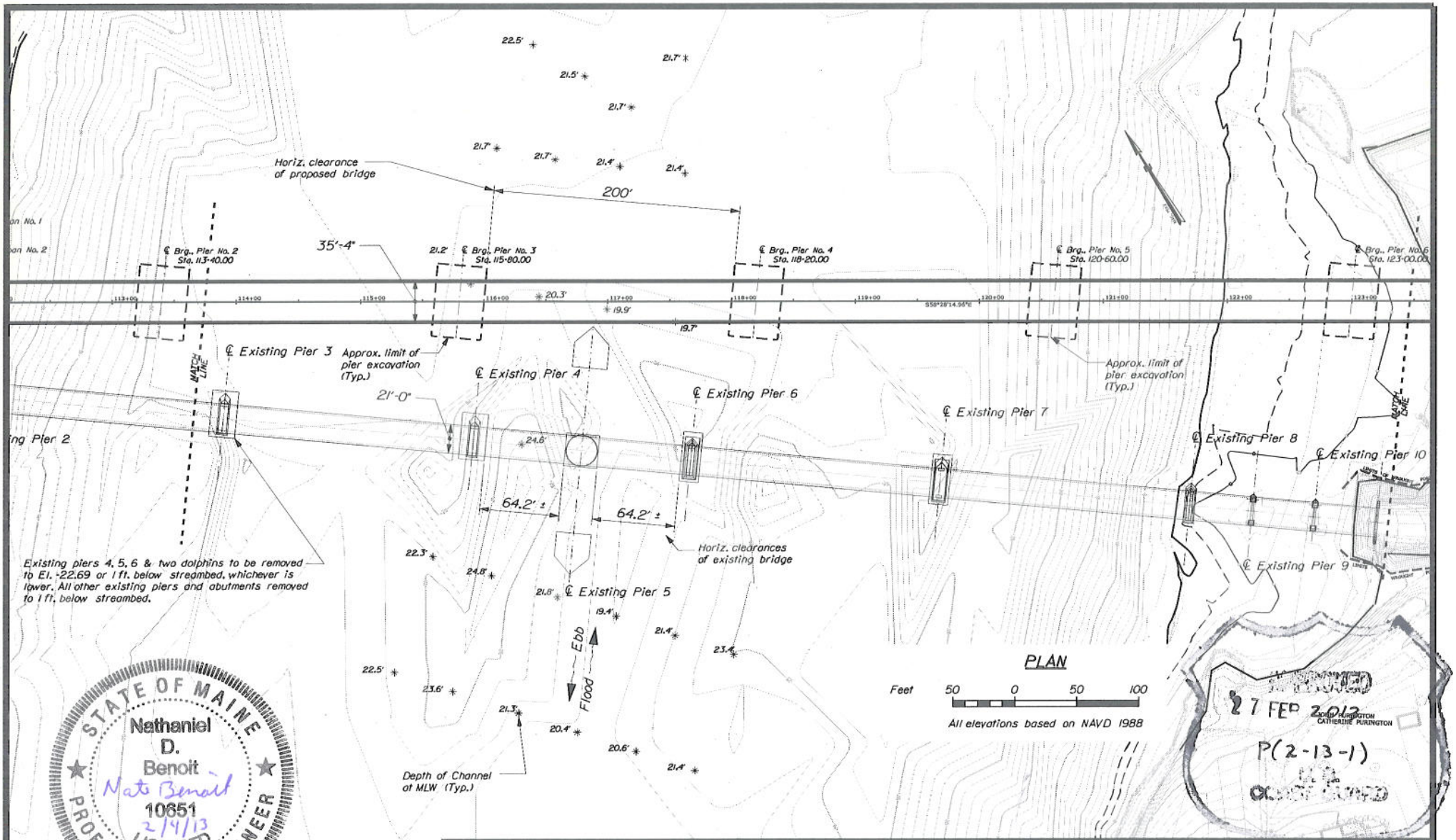

STATE OF MAINE DEPARTMENT OF TRANSPORTATION	MAINE KENNEBEC BRIDGE (RIVER MILE 26.2) KENNEBEC RIVER RICHMOND\DRESDEN SAGADAHOC\LINCOLN	SHEET NUMBER 4 OF 7
AC-BH-1267(400) December 12, 2012 BRIDGE NO. 2506	BRIDGE PLAN	

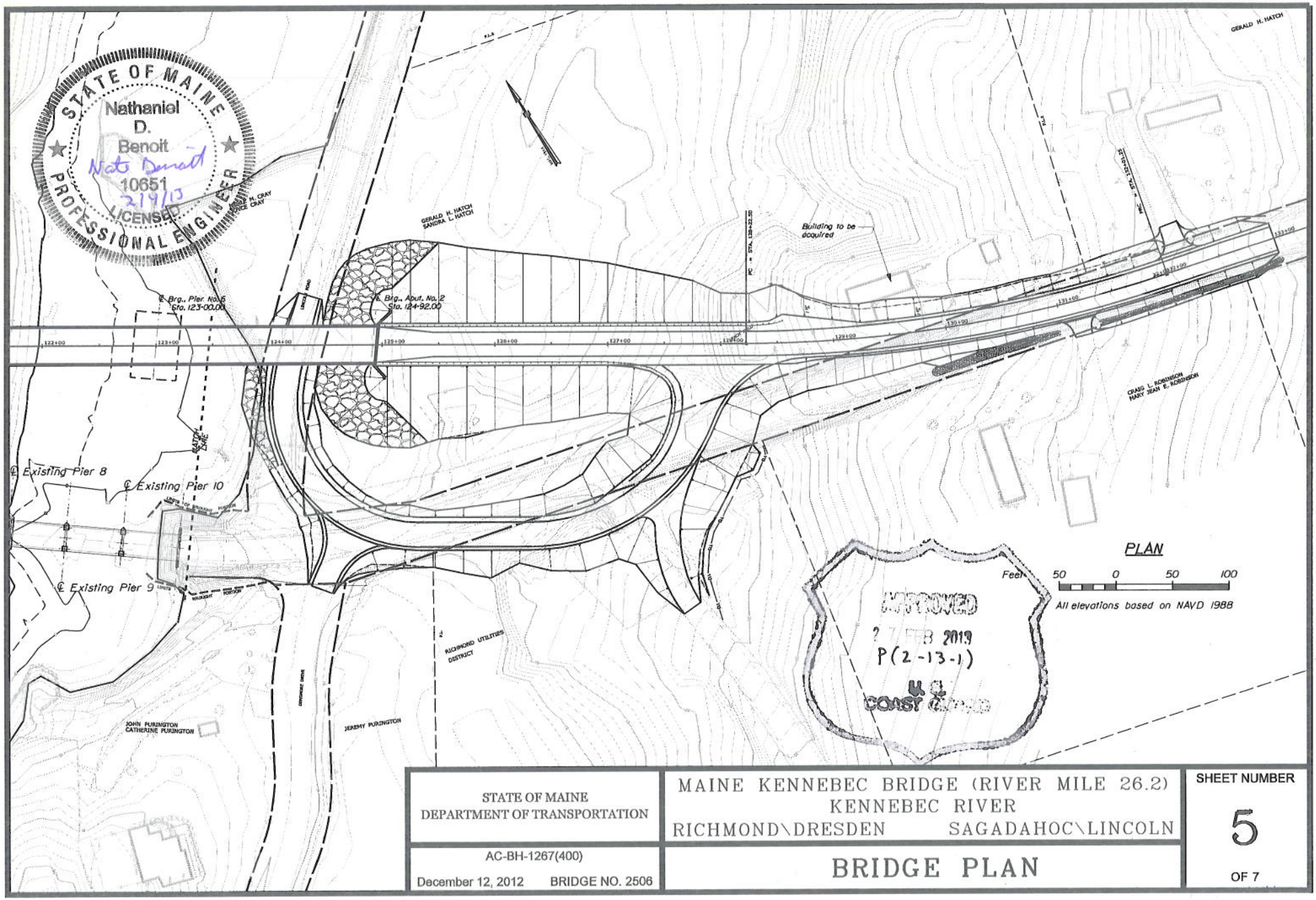

STATE OF MAINE DEPARTMENT OF TRANSPORTATION	MAINE KENNEBEC BRIDGE (RIVER MILE 26.2) KENNEBEC RIVER RICHMOND\DRESDEN SAGADAHOC\LINCOLN	SHEET NUMBER 5 OF 7
AC-BH-1267(400) December 12, 2012 BRIDGE NO. 2506	BRIDGE PLAN	

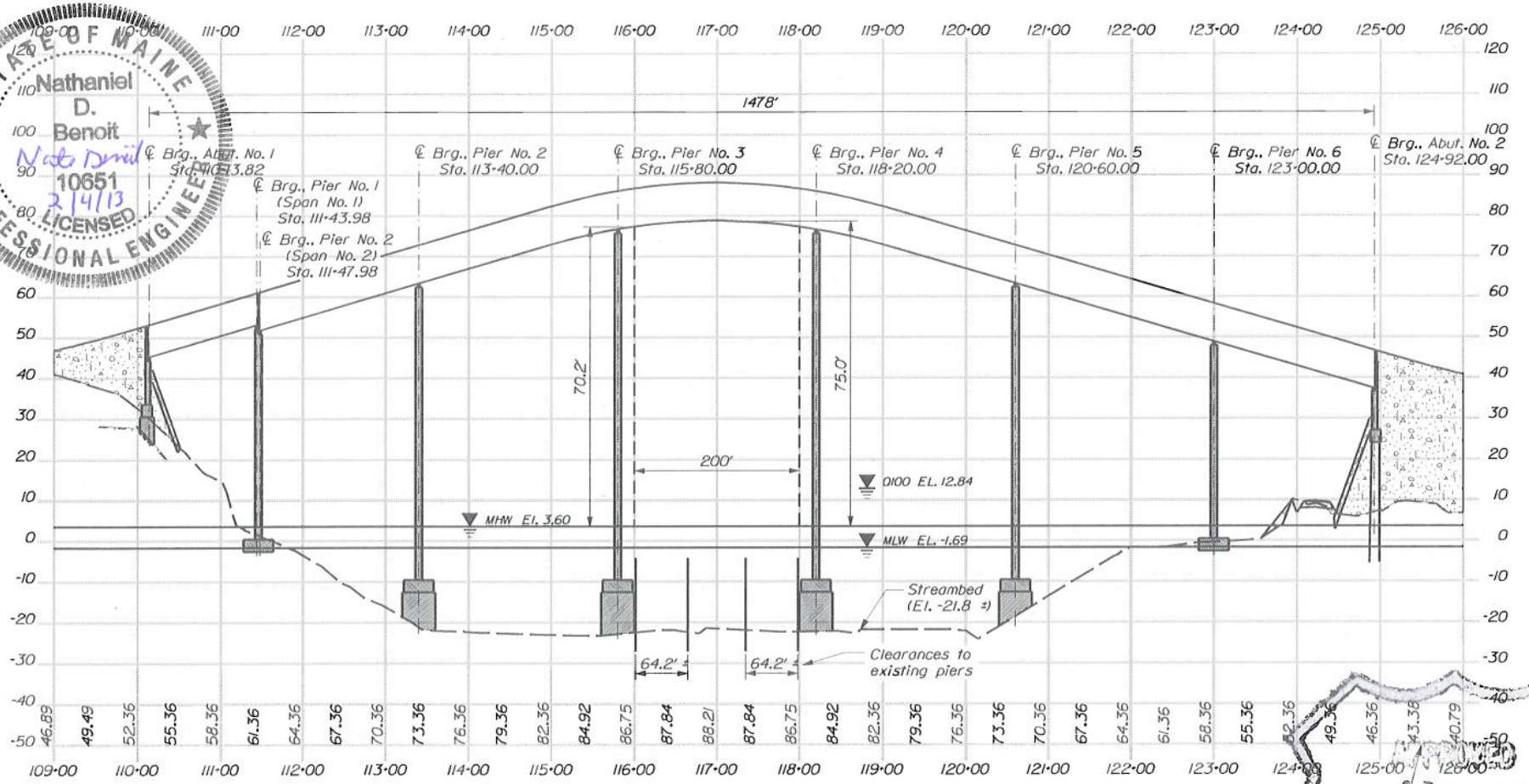

STATE OF MAINE
Nathaniel D. Benoit
10651
LICENSED
PROFESSIONAL ENGINEER
Nat Benoit 2/4/13

APPROVED
27 FEB 2013
P(2-13-1)
COAST GUARD

Notes:

1. All Elevations based on NAVD 1988
2. No fill below Mean High Water.
3. Vertical clearance of 75' is maintained over a 76' width in the center of the navigational channel.
4. Army Corps of Engineers Federal Navigational Project Attached.
   Depth = 17'
   Width at Bridge = 145'

PROFILE
Horiz. 50 0 50 100
Vert. 10 0 10 20
SCALE (FEET)

STATE OF MAINE DEPARTMENT OF TRANSPORTATION	MAINE KENNEBEC BRIDGE (RIVER MILE 26.2) KENNEBEC RIVER RICHMOND\DRESDEN SAGADAHOC\LINCOLN	SHEET NUMBER 6 OF 7
AC-BH-1267(400) December 12, 2012 BRIDGE NO. 2506	ELEVATION VIEW	

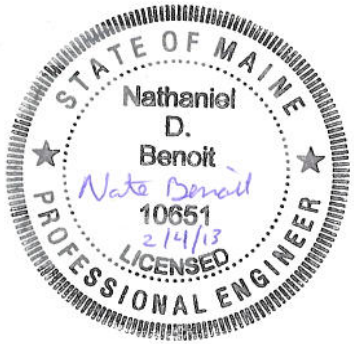

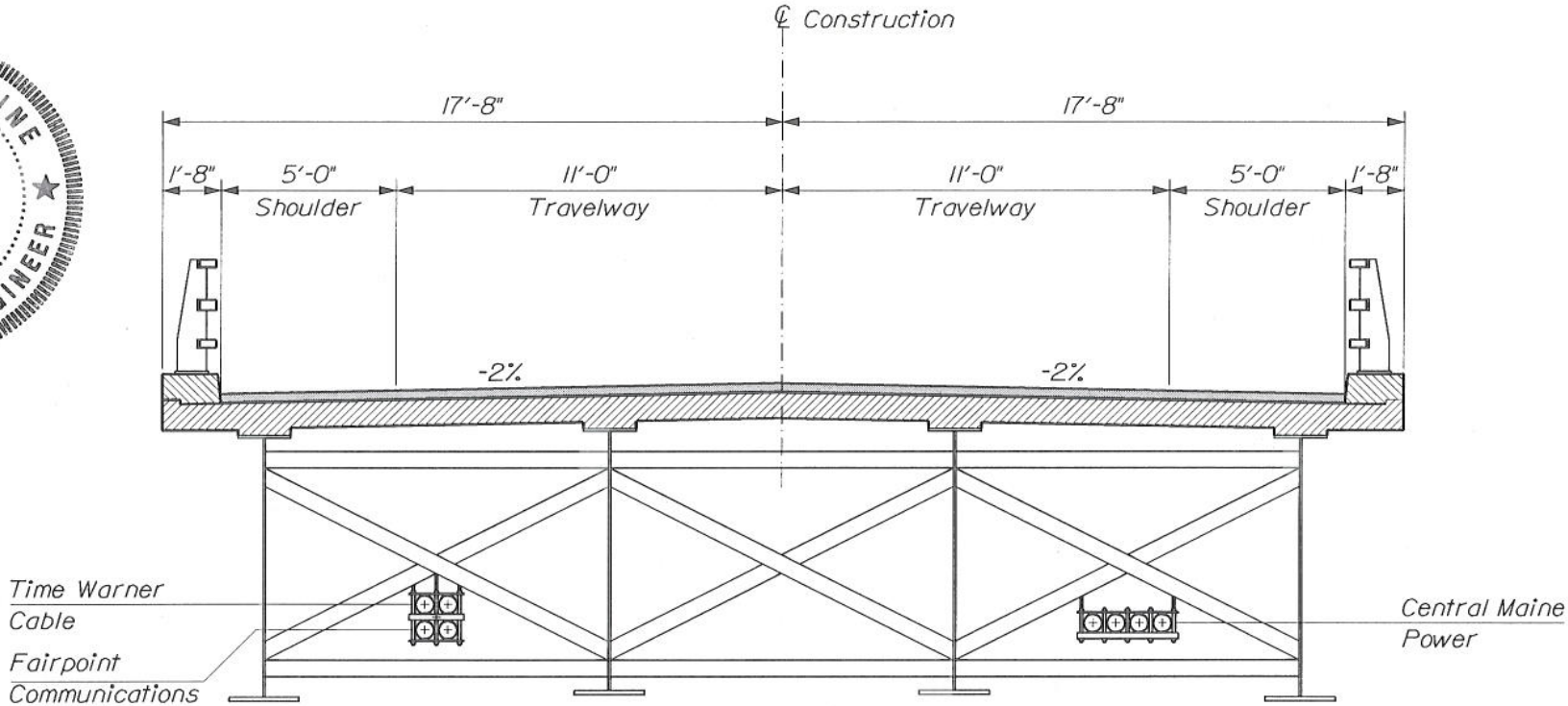

TYPICAL BRIDGE SECTION

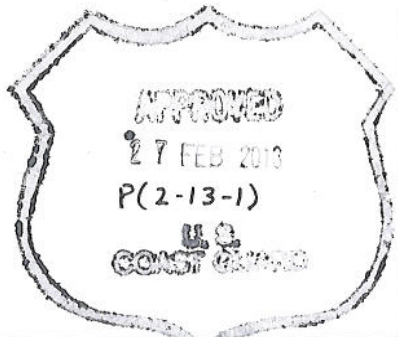

STATE OF MAINE DEPARTMENT OF TRANSPORTATION	MAINE KENNEBEC BRIDGE (RIVER MILE 26.2) KENNEBEC RIVER RICHMOND\DRESDEN SAGADAHOC\LINCOLN	SHEET NUMBER 7
AC-BH-1267(400) December 12, 2012 BRIDGE NO. 2506	TYPICAL BRIDGE SECTION	OF 7

July 16, 2009

SPECIAL PROVISION
SECTION 102.3
EXAMINATION OF DOCUMENTS, SITE, AND OTHER INFORMATION
(Geotechnical Information)

Add the following to Section 102.3, Examination of Documents, Site and Other Information:

102.3.1 Geotechnical Information In most cases, Geotechnical Information pertaining to the project has been collected and assembled. Bidders and Contractors are obligated to examine and, if necessary, obtain geotechnical information. If one is available, the project geotechnical report may be accessed at the following web address:

http://www.maine.gov/mdot/contractors/

The Department shall not be responsible for the Bidders' and Contractors' interpretations of or estimates or conclusions drawn from the Geotechnical Information. Data provided may not be representative of the subsurface conditions between the boring locations.

This section does not diminish the duties imposed upon parties in Section 102 or in any other sections.

Town: Dresden-Richmond
Project: AC-BH-1267(400)X
WIN: 12674.00
Date: February 15, 2013
(revised February 27, 2013)
(re-revised March 8, 2013)

SPECIAL PROVISIONS
SECTION 104
Utilities

MEETING

A Preconstruction Utility Conference, as defined in Subsection 104.4.6 of the Standard Specifications **is** thereby called for.

GENERAL INFORMATION

These Special Provisions outline the arrangements that have been made by the Department for coordination of the work and for utility and/or railroad adjustments as defined in Subsection 104.4.6 and 104.4.8 of the Standard Specifications. The following list identifies all known utilities or railroads having facilities presently located within the limits of this project or intending to install facilities during project construction, unless otherwise provided.

Overview

Utility/Railroad	Aerial	Underground	Railroad
Central Maine Power Company	X	X	None
Time Warner Cable	X	X	None
Fairpoint Communications	X	X	None

Temporary utility adjustments are not contemplated unless herein provided for.

The approximate locations of major items of existing and proposed (permanent and temporary) utility plant are shown on the highway construction plans.

All utility crossings over highways will provide not less than 20 feet vertical clearance over existing ground in cut or over finished grade in fill, during construction of this project.

Manholes, valve boxes, service connections, and similar incidental utility plant are to be adjusted in cooperation with work being done by the Contractor**.**

Unless otherwise provided, utilities will not be required to make underground installations in frozen ground.

Any times and dates mentioned are estimates only and are dependent upon favorable weather, working conditions, and freedom from emergencies. The Contractors shall have no claim against the Department if they are exceeded.

Utility working days are Monday through Friday, conditions permitting. Times are estimated on the basis of a single crew for each utility.

In all cases, the utilities shall be advised well in advance (generally three weeks) before work, dependent upon other work to be done by the Contractor, in any particular area, is to be commenced by them.

Unless otherwise specified, any underground utility facilities shown on the project plans represent approximate locations gathered from available information. The Department cannot certify the level of accuracy of this data. Underground facilities indicated on the topographic sheets (plan views) have been collected from historical records and/or on-site designations provided by the respective utility companies. Underground facilities indicated on the cross-sections have been carried over from the plan view data and may also include further approximations of the elevations (depths) based upon straight-line interpolation from the nearest manholes, gate valves, or test pits.

All clearing and tree removal which is a part of this contract in areas where utilities are involved must be completed by the Contractor before the utilities can relocate their facilities. The Contractor shall clear and remove all trees to the right-of-way limit on the left.

AERIAL

Proposed Pole Locations

Richmond Route 197 (Front Street)

Station	**Offset**	**Remarks**
105+25	29 Ft. Right	
106+19	32 Ft. Left	
106+64	35 Ft. Right	2 ½ Ft. Cut
107+88	32 Ft. Left	4 Ft. Cut New UG Riser Pole
109+15	20 Ft. Left	7 Ft. Fill New UG Riser Pole
109+80	21 Ft Right	14 Ft. Fill

Town: Dresden-Richmond
Project: AC-BH-1267(400)X
WIN: 12674.00
Date: February 15, 2013
(revised February 27, 2013)
(re-revised March 8, 2013)

Dresden Route 197

Station	Offset	Remarks
125+81	21 Ft. Right	28 ½ Ft. Fill New UG Riser Pole
127+12	22 Ft. Right	18 Ft. Fill New UG Riser Pole
128+67	24 Ft. Right	8 ½ Ft. Fill
129 +34	31 Ft. Left	
130+03	30 Ft. Left	
131+47	32 Ft. Left	
133+07	19 Ft. Left	
133+07	19 Ft. Right	

Dresden
Access Road to Lincoln Road, Densmore Lane

Station	Offset	Remarks
12+88	23 Ft. Left	6 Ft. Fill
14+38	23 Ft. Left	3 ½ Ft. Fill

Dresden
Lincoln Road

Station	Offset	Remarks
16+44	17 Ft. Left	1 Ft. Fill New UG Riser
18+19	16 Ft. Left	New UG Riser

AERIAL

Fairpoint Communications plans to install all new poles on the Richmond and Dresden approaches and the Access Road to Lincoln Road and Densmore Lane and Lincoln Road; their estimated time to install the 18 poles is 10 working days.

Fairpoint Communications then plans to run new copper and fiber cables on the new poles; their estimated time is 20 working days.

They plan to remove the old cables and poles; their estimated time is 5 working days.

Central Maine Power Company plans to run new conductors on the new poles for both Richmond and Dresden approaches, including the Access Road to Lincoln Road and Densmore Lane and on Lincoln Road; their estimated time is 20 working days.

They plan to remove their old conductors from the old poles; their estimated time is 5 working days.

Time Warner Cable plans to run new cable on the new poles for both Richmond and Dresden approaches including the Access Road to Lincoln Road and Densmore Lane and on Lincoln Road; their estimated time is 15 working days.

They plan to remove their old cable from the old poles; their estimated time is 3 working days.

Sequence of Aerial Work

Fairpoint Communications set all new poles within the limits of the project.
Central Maine Power Company run new conductors and remove old conductors.

Time Warner Cable run new cable and remove old cable.

Fairpoint Communications to run new cables on the new poles. This is for both copper and fiber cables.

UNDERGROUND

Central Maine Power Company, **Time Warner Cable** and **Fairpoint Communications** plan to include their conduit work on the bridge in the Department's contract.

Lincoln Road between Station 16+44 to Station 18+19 on the Left

Fairpoint Communications plans to install 2-4 inch concrete encased conduit; their estimated time is 5 working days. Run new cable in this conduit; their estimated time is 1 working day. Cut and splice the new cables and the old cables; their estimated time is 3 working days. Remove old poles and old cables; their estimated time is 1 working day. Their total estimated time for the above work is 10 working days.

Time Warner Cable plans to install a new pre-wire concrete encased conduit and cut in their new cable, their estimated time to do this work is 5 working days.

Central Maine Power Company plans to install 2-6 inch concrete encased conduits with the installation of a new single phase conductor and removal of their old aerial conductors; their estimated time is 5 working days.

Dresden Route 196 Approach to the New Bridge Between Station 125+00+/- to Station 127+15+/-

Fairpoint Communications plans to install 4-4" concrete encased conduit, run new cables; estimated time is 5 working days.

Time Warner Cable plans to install 1-4" concrete encased conduit; estimated time is 5 working days.

Central Maine Power Company plans to install 4-6" concrete encased conduits and conductors; their estimated time is 7 working days.

Richmond Route 196 Approach to the New Bridge Between Station 107+85+/- and Station 109+95+/-

Fairpoint Communications, Time Warner Cable and Central Maine Power Company, same as Dresden approach.

CONTRACTOR

Fairpoint Communications, **Central Maine Power Company** and **Time Warner Cable** may have the bridge contractor excavate the utility trench along Lincoln Road.

The three utilities (**Central Maine Power Company, Fairpoint Communications,** and **Time Warner Cable**) have included their work in the Department's contract. This work includes utility facility work on the bridge, including but not limited to conduit vault, conduit hangars, and additional structural steel.

The existing power service to the swing span shall remain in service until the new bridge is open to traffic.

Fairpoint Communications' existing cable on the old bridge shall remain active until the new cable on the new bridge is activated.

Contractor: Fairpoint Communications, Time Warner Cable and **Central Maine Power Company** reserve the right to negotiate with the bridge contract for the installation of their conduits in the bridge approaches and on Lincoln Road.

If there is a conflict between the above utilities' specifications and plans, and the Department's specifications and plans, the most stringent shall govern.

UTILITY SPECIFIC ISSUES

Any tree removal or tree trimming required within ten feet of the electrical conductors must be done by a qualified contractor. A list of tree removal contractors qualified to remove trees or limbs within ten feet of the electrical conductors may be obtained from the power company.

CC: Nate Benoit, Project Manager
Coy Williams, Devan Eaton, Ed Caswell

April 10, 2013
Supersedes December 17, 2010

SPECIAL PROVISION
SECTION 104
GENERAL RIGHTS AND RESPONSIBILITIES
(Electronic Payroll Submission)
(Payment Tracking)

104.3.8.1 Electronic Payroll Submission The prime contractor and all subcontractors and lower-tier subcontractors will submit their certified payrolls electronically on this contract utilizing the Elation System web based reporting. There is no charge to the contracting community for the use of this service. The submission of paper payrolls will not be allowed or accepted. Additional information can be found at http://www.maine.gov/mdot/contractors/ under the "Quick Links".

104.3.8.2 Payment Tracking The prime contractor and all subcontractors and lower-tier subcontractors will track and confirm the delivery and receipt of all payments through the Elation System

SPECIAL PROVISION
SECTION 104.5.5
GENERAL RIGHTS AND RESPONSIBILITIES
Prompt Payment of Subcontractors

104.5.5

104.5.5 Prompt Payment of Subcontractors

A. Pay When Paid The Contractor shall pay Subcontractors for all Work satisfactorily performed and Invoiced by the Subcontractor no later than 30 Days from the date the Contractor receives payment from the Department for such Subcontractor's Work.

B. Payment Tracking Federal Projects On federally funded projects, the prime contractor, subcontractors and lower-tier subcontractors will track and confirm the delivery and receipt of all payments through the Elation System. They will be responsible for entering all payments to all sub and lower tier contractors. MaineDOT will run a query monthly to ensure that contractors are complying and generate an e-mail to contractors who have not responded to confirm receipt of MaineDOT payment or contractor payment to lower tier subcontractors.

C. Retainage The Contractor shall return to the Subcontractor all retainage withheld from the Subcontractor within 30 Days after the date the Subcontractor's Work is satisfactorily completed. If there is a Delay in such return of retainage, the Subcontractor may pursue all rights it may have under the claims procedure referenced in Section 104.5.6 - Subcontractor Claims for Payment.

SPECIAL PROVISION
SECTION 105
General Scope of Work
(Environmental Requirements)

In-Water work consists of any activity conducted below the normal high water mark of a river, steam, brook, lake, pond or "Coastal Wetland" areas that are subject to tidal action during the highest tide level for the year which an activity is proposed as identified in the tide tables published by the National Ocean Service. http://www.oceanservice.noaa.gov/ For the full definition of "Coastal Wetlands", please refer to 38 MRSA 480-B(2)

I. In-Water work applies to the following water bodies at the following station #'s:
   1. Kennebec River at approximately 111+00 to 124+00

II. In-Water Work shall be allowed as follows:

   1. Pile-driving (sheet pile and/or foundation pile), rock-drilling and pier removal is conditionally allowed anytime.
   2. Construction of fill temporary access road(s) (if applicable):
      a. prohibited from April 1-May 31
      b. conditionally allowed between June 1 and March 31
   3. In-water blasting is not allowed without consultation with MaineDOT and NOAA and submittal of a blasting plan as described in Section 6.

III. Conditions for construction of fill temporary access roads (if applicable):
   1. In-water construction prohibited between April 1 and May 31;
   2. Only one temporary construction access road may be constructed at a time;
   3. Temporary wetland and river impacts from access roads, combined with all other temporary wetland and stream impacts shall not exceed the approved permitted temporary impact amounts listed in Section XII.
   4. The contractor shall work with the tides so that the intertidal portion of the temporary road construction will occur in the dry;
   5. Temporary roads shall be constructed of washed heavy riprap on top of a geotextile fabric filter layer. The road material shall be free of sediment sources;
   6. Turbidity curtains shall be used to the extent practicable
   7. Access roads shall be removed to pre-construction grade as soon as they are no longer needed

IV. Conditions for Pile-driving (includes sheet pile and/or foundation pile), rock-drilling and pier removal:
   1. Between April 1 and July 30, active use of hammer for all pile driving shall be limited to a maximum of 240 minutes per day. Pile-driving inside a dewatered cofferdam does not count toward the 240 minutes/day limit.

   2. The contractor shall retain the services of a qualified person or firm to prepare and implement a hydroacoustic monitoring plan. A list of pre-qualified noise monitoring persons and firms can be found at the following link (Item 502.30) : http://www.maine.gov/tools/whatsnew/attach.php?id=94083&an=2. The contractor shall provide

MaineDOT and NMFS (Max Tritt (max.tritt@noaa.gov) , phone (207) 866-7356) a draft hydroacoustic monitoring plan at least 30 days prior to implementation for NMFS approval. The monitoring plan shall describe monitoring locations, equipment and protocols, and personnel and shall describe how the contractor will complete the following:

a) Monitor Sound Pressure Level (SPL) during all pile driving, rock drilling, and pier removal using a series of hydrophones and a digital recorder capable of operating at a minimum of 600,000 samples per second for a minimum of one second, with an adjustable trigger level, and a range of at least 30 psi.

Initially, a minimum of three hydrophones must be used, located approximately 10, 20, and 40 meters from the river- pile/pier interface. Additional hydrophones may be required to document sound levels remain below the previously established thresholds at mid-stream, and at the farthest bank.

b) Ensure that the sound pressure levels at all hydrophones be maintained below 206 dB PEAK re 1 µPa and below 187 dB CSEL re 1 µPa. In-water noise levels greater than 150dB RMS re 1µ Pa measured at any hydrophone must not persist in excess of 12 consecutive hours on any given day, and a 12 hour recovery period (i.e., in-water noise below 150dB RMS re lµ Pa, or a return to ambient levels) must be provided between work days.

c) Mitigate excessive underwater noise (>206 dB PEAK re 1 µPa, 187 dB SEL re 1 µPa, or 150dB RMS re 1µ Pa in excess of 12 hours.) through passive measures such as changing hammer type, reducing driving duration, reducing force settings on the hammer, or through active measures such as but not limited to a bubble curtain. The contractor shall employ all reasonable and prudent measures including but not limited to those listed above. If underwater noise continues to exceed noise limits, the contractor shall consult with MaineDOT and NOAA to determine next steps.

d) Provide NMFS with daily acoustic monitoring reports as generated by the contractor. Electronic means of delivery e.g., email or fax is acceptable. The contractor's noise-consultant shall provide reports directly to NMFS with CC to MaineDOT ENV Office Biologist (Eric Ham, eric.ham@maine.gov)

2. a) Acoustic monitoring shall be required at the beginning of each individual coffer dam installation to monitor the noise associated with sheet pile installation. Should noise intensity levels approach the published threshold for having the potential to injure listed species (187 dB re 1µPa CSEL and/ or 206_{PEAK} dB re: 1 micro Pascal (1 µ Pa)), noise minimization measures will be used during subsequent pile driving activity. Should recorded underwater noise fall below the threshold for indication of potential behavioral modification by listed species (>150dB re: 1 µ Pa RMS) during active sheetpile installation at a specific cofferdam installation, then acoustic monitoring may be suspended for the remainder of the installation of that specific cofferdam. As subsequent cofferdams are installed, monitoring will resume until recorded underwater noise is shown to be consistently below the threshold for potential behavioral modification by listed species.

b) Acoustic monitoring is not required for work within a dewater cofferdam.

3. For all pile driving (sheet pile and/or foundation pile), rock drilling and pier removal between April 10 and November 7, the contractor shall allow a MaineDOT observer to be present on site to monitor for the presence of fish in the work area.

V. Conditions for cofferdam closure and dewatering between March 1 and November 7:

1. The contractor shall work with MaineDOT to develop and implement a plan to document and remove listed species entrapped during cofferdam closure. The plan must allow for access to identify and evacuate fish if present in the work area. A draft plan must be provided to MaineDOT ENV for submittal to NMFS at least 30 days prior to installation of the first cofferdam.

2. The contractor shall notify MaineDOT Environmental Office (Eric Ham, 215-7356) two weeks prior to anticipated closure and dewatering of each cofferdam. MaineDOT will determine likelihood of sturgeon presence based on water temperature. During the closure of each cofferdam, i.e., the installation of the final sheetpile, a MaineDOT Environmental Office Biologist must be present on site. Dewatering shall not begin until the cofferdam is cleared by the MaineDOT Biologist. The MaineDOT Biologist will monitor for the presence of live, wounded, or dead fish and report to NOAA. The MaineDOT Biologist may also sample water pumped during cofferdam dewatering to determine presence or absence of sturgeon larvae.

3. Cofferdams shall be dewatered using large bore pumps capable of passing small fish (>10 centimeters/ 4 inch clearance between moving parts) to adequately protect all life stages of listed species that may occur in the action area.

4. The contractors and its employees shall not handle any ESA-listed species (Atlantic salmon, Shortnose sturgeon, and Atlantic sturgeon) during cofferdam construction or dewatering.

VI. Conditions if in-water blasting is required

1. If in-water blasting is required for any portion of the project, including but not limited to removal of the existing bridge piers, the contractor shall consult with MaineDOT and include staff from the MaineDOT Environmental Office (Eric Ham, 215-7356, eric.ham@maine.gov). Limitations on blasting will be based on the time of year and the presence or absence of listed species in the project area. The contractor shall prepare a blasting plan that contains sufficient information to allow assessment of effects to listed fish. The blasting plan shall include detailed design information on each charge (e.g., type of explosive and detonation velocity (burn rate); type of blasting technique used; borehole dimensions, spacing, charge weights, delay intervals; method of initiation; and noise mitigation plans. Blasting shall be designed to ensure that there is no potential to harm, harass, injure or kill listed fish. The plan shall be submitted to NMFS no later than 90 days prior to planned detonation. Re-initiation of consultation will be required if there is potential to harm, harass, injure or kill listed species.

VII. Should the contractor see any ESA-listed species (Atlantic sturgeon, shortnose sturgeon, or Atlantic salmon) or have any incidental contact, the contractor shall contact NMFS (Max Tritt: by email (max.tritt@noaa.gov) or phone (207) 866-7356 within 24 hours. If Max is unavailable, the contract shall contact the NMFS Section 7 Coordinator by phone (978) 281-9208 or fax 978-281-9394). The contractor shall also notify MaineDOT Environmental Office (Mike Clark, 592-8242 or Eric Ham 215-7356).

VIII. Fish mortality (of any species) directly correlated to or caused by project construction shall be reported to the ENV Field Contact (Mike Clark, 592-8242) for reporting to the Maine Department of Marine Resources

IX. Removal of existing bridge abutments shall take place in the dry behind a cofferdam. The cofferdam shall be constructed at low tide to ensure fish are not trapped within the cofferdam limits. The abutment removal area will be stabilized in accordance with MaineDOT BMPS/SP 656 prior to removal of the cofferdam.

X. The existing piers within and adjacent to the ACOE navigation channel (Piers 4, 5 and 6) shall be removed to an elevation of -22.7 feet or 1-foot below river bottom, whichever is lower. The remaining piers shall be removed to 1-foot below river bottom.

XI. Copies of the following permits are included in the contract documents and require special attention. All work shall adhere to the terms and conditions of these documents:

1. Maine Department of Environmental Protection (DEP) Individual Natural Resources Protection Act permit
2. Army Corps of Engineers (ACOE) Individual Permit; and
3. Terms and Conditions of Formal Endangered Species Act (Section 7) Consultation with National Atmospheric and Oceanic Administration (NOAA) apply.

XII. Approvals:

1. Temporary Soil Erosion and Water Pollution Control Plan
2. Hydroacoustic Monitoring Plan
3. Cofferdam Closure Plan
4. In-water Blasting Plan (if required)
5. Permitted Resource Impacts (square feet), see ACOE permit for locations:

<u>Wetland</u>:
Permanent: VFWIT(Intertidal)-1,457
PFO-15,921
PSS-16,199
Temporary: VFWIT-8,000

<u>Stream</u>:
Permanent: RUS-39,373
Temporary: RUS-4,000

XIII. All activities are <u>prohibited</u> (including placement and removal of cofferdams unless otherwise permitted by Regulatory Agencies) below the normal high water mark if outside the prescribed in-water work window, except for the following:

1. Work within a cofferdam constructed according to MaineDOT's Standard Specifications and in adherence with the contractors approved "Soil Erosion and Water Pollution Control Plan".

SPECIAL PROVISION
SECTION 105
LEGAL RELATIONS WITH AND RESPONSIBILITY TO PUBLIC
(NPDES)

105.8.2 Permit Requirements This Section is revised by the addition of the following paragraph:

"The Contractor is advised that the Environmental Protection Agency has issued a final National Pollutant Discharge Elimination System (NPDES) General Permit for storm water discharges from construction sites disturbing more than 2 ha [5 acres]. This permit requires:

- Storm Water Pollution Prevention Plan
- Submission of a Notification of Intent (NOI) at least 48 hours before construction commences
- Submission of a Notification of Termination (NOT) when a site has been finally stabilized and all storm water discharges from construction activities are eliminated.

If the project's land disturbances is 2 ha [5 acres] or more, the Department will prepare the plan and submit the NOI (and NOT). The Contractor shall prepare plans and submit NOI's (and NOT's) for regulated construction activities beyond the project limits (e.g., borrow pits).

The Contractor shall be familiar with and comply with these regulations."

SPECIAL PROVISION 105
OVERLIMIT PERMITS

Title 29-A § 2382 MRSA Overlimit Movement Permits.

1. Overlimit movement permits issued by State. The Secretary of State, acting under guidelines and advice of the Commissioner of Transportation, may grant permits to move nondivisible objects having a length, width, height or weight greater than specified in this Title over a way or bridge maintained by the Department of Transportation

2. Permit fee. The Secretary of State, with the advice of the Commissioner of Transportation, may set the fee for single trip permits, at not less than $6, nor more than $30, based on weight, height, length and width. The Secretary of State may, by rule, implement fees that have been set by the Commissioner of Transportation for multiple trip, long-term overweight movement permits. Rules established pursuant to this section are routine technical rules pursuant to Title 5, chapter 375, subchapter II-A.

3. County and municipal permits. A county commissioner or municipal officer may grant a permit, for a reasonable fee, for travel over a way or bridge maintained by that county or municipality

4. Permits for weight. A vehicle granted a permit for excess weight must first be registered for the maximum gross vehicle weight allowed for that vehicle.

5. Special mobile equipment. The Secretary of State may grant a permit, for no more than one year, to move pneumatic-tire equipment under its own power, including Class A and Class B special mobile equipment, over ways and bridges maintained by the Department of Transportation. The fee for that permit is $15 for each 30-day period.

6. Scope of permit. A permit is limited to the particular vehicle or object to be moved, the trailer or semitrailer hauling the overlimit object and particular ways and bridges.

7. Construction permits. A permit for a stated period of time may be issued for loads and equipment employed on public way construction projects, United States Government projects or construction of private ways, when within construction areas established by the Department of Transportation. The permit:

A. Must be procured from the municipal officers for a construction area within that municipality;

B. May require the contractor to be responsible for damage to ways used in the construction areas and may provide for:

(1) Withholding by the agency contracting the work of final payment under contract; or

(2) The furnishing of a bond by the contractor to guarantee suitable repair or payment of damages.

The suitability of repairs or the amount of damage is to be determined by the Department of Transportation on state-maintained ways and bridges, otherwise by the municipal officers;

C. May be granted by the Department of Transportation or by the state engineer in charge of the construction contract; and

D. For construction areas, carries no fee and does not come within the scope of this section.

8. Gross vehicle weight permits. The following may grant permits to operate a vehicle having a gross vehicle weight exceeding the prescribed limit:

A. The Secretary of State, with the consent of the Department of Transportation, for state and state aid highways and bridges within city or compact village limits;

B. Municipal officers, for all other ways and bridges within that city and compact village limits; and

C. The county commissioners, for county roads and bridges located in unorganized territory.

9. Pilot vehicles. The following restrictions apply to pilot vehicles.

A. Pilot vehicles required by a permit must be equipped with warning lights and signs as required by the Secretary of State with the advice of the Department of Transportation.

B. Warning lights may be operated and lettering on the signs may be visible on a pilot vehicle only while it is escorting a vehicle with a permit on a public way.

With the advice of the Commissioner of Transportation and the Chief of the State Police, the Secretary of State shall establish rules for the operation of pilot vehicles.

9-A. Police escort. A person may not operate a single vehicle or a combination of vehicles of 125 feet or more in length or 16 feet or more in width on a public way unless the vehicle or combination of vehicles is accompanied by a police escort. The Secretary of State, with the advice of the Commissioner of Transportation, may require a police escort for vehicles of lesser dimensions.

A. The Bureau of State Police shall establish a fee for state police escorts to defray the costs of providing a police escort. A county sheriff or municipal police department may establish a fee to defray the costs of providing police escorts.

B. The Bureau of State Police shall provide a police escort if a request is made by a permittee. A county sheriff or municipal police department may refuse a permittee's request for a police escort.

C. A vehicle or combination of vehicles for which a police escort is required must be accompanied by a state police escort when operating on the interstate highway system.

10. Taxes paid. A permit for a mobile home may not be granted unless the applicant provides reasonable assurance that all property taxes, sewage disposal charges and drain and sewer assessments applicable to the mobile home, including those for the current tax year, have been paid or that the mobile home is exempt from those taxes. A municipality may waive the requirement that those taxes be paid before the issuance of a permit if the mobile home is to be moved from one location in the municipality to another location in the same municipality for purposes not related to the sale of the mobile home.

11. Violation. A person who moves an object over the public way in violation of this section commits a traffic infraction.

Section History:
PL 1993, Ch. 683, §A2 (NEW).
PL 1993, Ch. 683, §B5 (AFF).
PL 1997, Ch. 144, §1,2 (AMD).
PL 1999, Ch. 117, §2 (AMD).
PL 1999, Ch. 125, §1 (AMD).
PL 1999, Ch. 580, §13 (AMD).
PL 2001, Ch. 671, §30 (AMD).
PL 2003, Ch. 166, §13 (AMD).
PL 2003, Ch. 452, §Q73,74 (AMD).
PL 2003, Ch. 452, §X2 (AFF).

SPECIAL PROVISION 105
CONSTRUCTION AREA

A Construction Area located in the **Town of Dresden** and **Richmond** has been established by the Maine Department of Transportation (MDOT) in accordance with provisions of 29-A § 2382 Maine Revised Statutes Annotated (MRSA).

a) The section of highway under construction in the town of Richmond, Sagadahoc County and the town of Dresden, Lincoln County on Old Ferry road, route 197 over the Kennebec River, and Lincoln road.

b) (Old Ferry Road) station 6+00.00 to station 8+00.00 of the construction plus approaches.

c) (Route 197 / Front Street / Patterson Road) over the Kennebec river station 103+00.00 to station 133+00.00 of the construction plus approaches.

d) (Lincoln Road) station 11+19.00 to station 17+50.00 of the construction plus approaches.

Per 29-A § 2382 (7) MRSA, the MDOT may "*issue permits for stated periods of time for loads and equipment employed on public way construction projects, United States Government projects or construction of private ways, when within construction areas established by the Department of Transportation. The permit:*

A. Must be procured from the municipal officers for a construction area within that municipality;

B. May require the contractor to be responsible for damage to ways used in the construction areas and may provide for:

(1) Withholding by the agency contracting the work of final payment under contract; or

(2) The furnishing of a bond by the contractor to guarantee suitable repair or payment of damages.

The suitability of repairs or the amount of damage is to be determined by the Department of Transportation on state-maintained ways and bridges, otherwise by the municipal officers;

C. May be granted by the Department of Transportation or by the state engineer in charge of the construction contract; and

D. For construction areas, carries no fee and does not come within the scope of this section."

The Municipal Officers for the **Town of Dresden** agreed that an Overlimit Permit will be issued to the Contractor for the purpose of using loads and equipment on municipal ways in excess of the limits as specified in 29-A MRSA, on the municipal ways as described in the "Construction Area".

As noted above, a bond may be required by the municipality, the exact amount of said bond to be determined prior to use of any municipal way. The MDOT will assist in determining the bond amount if requested by the municipality.

The maximum speed limits for trucks on any town way will be 25 mph (40 km per hour) unless a higher legal limit is specifically agreed upon in writing by the Municipal Officers concerned.

SPECIAL PROVISION 105
CONSTRUCTION AREA

A Construction Area located in the **Town of Richmond** and **Dresden** has been established by the Maine Department of Transportation (MDOT) in accordance with provisions of 29-A § 2382 Maine Revised Statutes Annotated (MRSA).

a) The section of highway under construction in the town of Richmond, Sagadahoc County and the town of Dresden, Lincoln County on Old Ferry road, route 197 over the Kennebec River, and Lincoln road.

b) (Old Ferry Road) station 6+00.00 to station 8+00.00 of the construction plus approaches.

c) (Route 197 / Front Street / Patterson Road) over the Kennebec river station 103+00.00 to station 133+00.00 of the construction plus approaches.

d) (Lincoln Road) station 11+19.00 to station 17+50.00 of the construction plus approaches.

Per 29-A § 2382 (7) MRSA, the MDOT may "*issue permits for stated periods of time for loads and equipment employed on public way construction projects, United States Government projects or construction of private ways, when within construction areas established by the Department of Transportation. The permit:*

A. Must be procured from the municipal officers for a construction area within that municipality;

B. May require the contractor to be responsible for damage to ways used in the construction areas and may provide for:

(1) Withholding by the agency contracting the work of final payment under contract; or

(2) The furnishing of a bond by the contractor to guarantee suitable repair or payment of damages.

The suitability of repairs or the amount of damage is to be determined by the Department of Transportation on state-maintained ways and bridges, otherwise by the municipal officers;

C. May be granted by the Department of Transportation or by the state engineer in charge of the construction contract; and

D. For construction areas, carries no fee and does not come within the scope of this section."

The Municipal Officers for the **Town of Richmond** agreed that an Overlimit Permit will be issued to the Contractor for the purpose of using loads and equipment on municipal ways in excess of the limits as specified in 29-A MRSA, on the municipal ways as described in the "Construction Area".

As noted above, a bond may be required by the municipality, the exact amount of said bond to be determined prior to use of any municipal way. The MDOT will assist in determining the bond amount if requested by the municipality.

The maximum speed limits for trucks on any town way will be 25 mph (40 km per hour) unless a higher legal limit is specifically agreed upon in writing by the Municipal Officers concerned.

MaineDOT DBE Project Attainment Target (PAT)
for this Project is **.026 %**

The MaineDOT seeks to meet the specified annual Disadvantaged Business Enterprise (DBE) usage goal set out by 49 CFR 26.45 through the efforts of contractors seeking to employ qualified DBE subcontractors. We seek to meet this goal by race neutral means and do not, at this time, use contract specific requirements for each project. We do however, understand the capacity of Maine's DBE community and the unique characteristics a project may have that would differ from the broad annual goal.

Taking this into consideration, the MaineDOT will review each project and develop an anticipated attainment or Project Attainment Target (PAT) based on several factors that are project specific. Those factors include:

- ☐ Scope of Work
- ☐ DBE availability according to Specification Item
- ☐ Geographic location
- ☐ DBE capacity

This PAT is developed to assist contractors to better understand the DBE participation that the MaineDOT can reasonably expect for a specific project. The PAT is NOT a mandate but an assessment of the DBE opportunities that this project could meet or exceed. MaineDOT anticipates that each contractor will make the best effort to reach or exceed the PAT for this project.

SPECIAL PROVISION 105
GENERAL SCOPE OF WORK
Equal Opportunity and Civil Rights
(Disadvantaged Business Enterprises Program)

105.10.1.1 Disadvantaged Business Enterprises Program The Maine Department of Transportation (MaineDOT) has established a Disadvantaged Business Enterprise (DBE) program in accordance with regulations of the United States Department of Transportation (USDOT), 49 CFR Part 26. The MaineDOT receives federal financial assistance from USDOT, and as a condition of receiving this assistance, the Department has signed an assurance that it will comply with 49 CFR Part 26.The MaineDOT is responsible for determining the eligibility of and certifying DBE firms in Maine.

A DBE is defined as a for-profit business that is owned and controlled by one or more socially and economically disadvantaged person(s). For the purpose of this definition:

1. "Socially and economically disadvantaged person" means an individual who is a citizen or lawful permanent resident of the United States and who is Black, Hispanic, Native American, Asian, Female; or a member of another group or an individual found to be disadvantaged by the Small Business Administration pursuant to Section 3 of the Small Business Act.
2. "Owned and controlled" means a business which is:
   a. A sole proprietorship legitimately owned and controlled by an individual who is a disadvantaged person.
   b. A partnership or limited liability company in which at least 51% of the beneficial ownership interests legitimately are held by a disadvantaged person(s).
   c. A corporation or other entity in which at least 51% of the voting interest and 51% of the beneficial ownership interests legitimately are held by a disadvantaged person(s).

The disadvantaged group owner(s) or stockholder(s) must possess control over management, interest in capital, and interest in earnings commensurate with the percentage of ownership. If the disadvantaged group ownership interests are real, substantial and continuing and not created solely to meet the requirements of this program, a firm is considered a bona fide DBE.

105.10.1.2 Commercially Useful Function MaineDOT will count expenditures of a DBE contractor toward DBE goals only if the DBE is performing a commercially useful function on that contract. A DBE performs a commercially useful function when it is responsible for execution of the work of the contract and is carrying out its responsibilities by actually performing, managing, and supervising the work involved. Credit will only be given when the DBE meets all conditions for a CUF. Credit for labor will be in accordance with the responsibilities outlined in the contract. To perform a commercially useful function, the DBE must also be responsible, with respect to materials and supplies used on the Contract, for negotiating price, determining quality and quantity, ordering the materials, and installing (where applicable) and paying for the material itself. To determine whether a DBE is performing a commercially useful function, MaineDOT will evaluate the amount of work subcontracted, industry practices, whether the amount the firm is to be paid under the Contract is commensurate with the work it is actually performing and DBE credit claimed for its performance of the work, and other relevant factors.

Rented equipment used by the DBE must not be rented from the Prime Contractor on a job that the DBE is subcontracted with that Prime Contractor for regular course of business.

A current listing of certified DBEs that may wish to participate in the highway construction program and the scope of work for which they are certified can be found at http://www.maine.gov/mdot/disadvantaged-business-enterprises/pdf/directory.pdf. Credit will be given for the value described by a DBE performing as:

A. A prime contractor; 100% of actual value of work performed by own workforces.
B. An approved subcontractor; 100% of work performed by own workforces.
C. An owner-operator of construction equipment; 100% of expenditures committed.
D. A manufacturer; 100% of expenditures committed. The manufacturer must be a firm that operates or maintains a factory or establishment that produces on the premises the materials or supplies obtained by the Contractor. Brokers and packagers shall not be regarded as manufacturers.
E. A regular dealer; 60% of expenditures committed. A regular dealer is defined as a firm that owns, operates, or maintains a store, warehouse or other establishment in which the materials or supplies required for the performance of the contract are bought, kept in stock, and regularly sold to the public. For purposes of this provision a "Broker" is a DBE that has entered into a legally binding relationship to provide goods or services delivered or performed by a third party. Brokers and packagers shall not be regarded as regular dealers.
F. A bona fide service provider; 100% of reasonable fees or commissions. Eligible services include professional, technical, consultant, or managerial, services and assistance in the procurement of essential personnel, facilities, equipment, materials or supplies required for the performance of the contract. Eligible services also include agencies providing bonding and insurance specifically required for the performance of the contract.
G. A trucking, hauling or delivery operation. 100% of expenditures committed when trucks are owned, operated, licensed and insured by the DBE and used on the contract and, if applicable, includes the cost of the self supplied materials and supplies.100% of expenditures committed when the DBE leases trucks from another DBE firm including an owner-operator. 100% of reasonable fees or commissions the DBE receives as a result of a lease arrangement for trucks from a non-DBE, including an owner-operator.
H. Any combination of the above.

105.10.1.3 Race-neutral Goals The Maine DOT is required to set an annual goal (approved on a three year basis) for DBE participation in Federal-aid projects. In order to fulfill that goal, bidders are encouraged to utilize DBE businesses certified by the MaineDOT. MaineDOT seeks to meet the established DBE goal solely through race-neutral means. *Race-neutral* DBE participation occurs when a DBE is awarded a prime contract through customary competitive procurement procedures, is awarded a subcontract on a contract that does not carry a DBE contract goal, or wins a subcontract from a prime contractor that did not consider its DBE status in making the award. A DBE/subcontractor Utilization Proposed Form is required to be included in bid documents.

MaineDOT will analyze each project and create a Project Availability Target (PAT), based on a number of factors including project scope, available DBE firms, firms certified in particular project work, etc. Each bid will request that the contractor attempt to meet the PAT. This PAT is developed to assist contractors to better understand what the MaineDOT expectations are for a

specific project. The PAT is NOT a mandate but an assessment of what this particular project can bear for DBE participation. The Department anticipates that each contractor will make the best effort to reach or exceed this PAT for the project.

105.10.1.4 Race-conscious Project Goals If it is determined by the Department that the annual DBE goal will not be met through *race-neutral* means, the Department may implement *race-conscious contract goals* on some projects. Race-conscious contract goals are goals that are enforceable by the Department and require that the prime contractor use good faith effort to achieve the goal set by the Department for that particular project. If race conscious means are implemented on a project, the Prime must comply with the requirements of 49 CFR.

At the time of the bid opening, all Bidders shall submit with their bid a Disadvantaged Business Enterprise (DBE) Commitment Form provided by the Department. This form will list the DBE and non-DBE firms that are proposed to be used during the execution of the Work. The list shall show the name of the firm, the item/material/type of work involved and the dollar amount of work to be performed. The dollar total of each commitment shall be totaled and a percentage determined.

If the project goal is not met, acceptable documentation showing all good faith efforts made to obtain participation may be required in order to award the project. Failure to provide the required listing with the dollar participation total or acceptable documentation of good faith efforts to obtain DBE participation within 3 days after the bid opening date will be considered a lack of responsiveness on the part of the low bidder. Rejection of the low bid under these circumstances will require the low bidder to surrender the Proposal Guaranty to the Department. The submission and approval of the above forms does not constitute a formal subcontract.

If for any reason during the progress of the Work the Contractor finds that DBEs included on the list are unable to perform the proposed work, the Contractor, with written release by the committed DBE or approval of the Department, may substitute other DBE firms for those named on the list. If the Contractor is able to clearly document their inability to find qualified substitute firms to meet the project goal, the Contractor may request in writing approval to substitute the DBE with a non-DBE firm. If at any time during the life of the Contract it is determined that the Contractor is not fulfilling the goal or commitment(s) and is not making a good faith effort to fulfill the DBE requirement, the Department may withhold progress payments. If good faith effort is determined by the Department, failure to meet the DBE contract goal will not be a detriment to the bid award. Fulfillment of the goal percentage shall be determined by dividing the dollars committed to the DBEs by the actual contract dollars. These requirements are in addition to all other Equal Employment Opportunity requirements on Federal-aid contracts.

105.10.1.5 Certification of DBE attainment on Contracts The MaineDOT must certify that it has conducted post-award monitoring of all contracts to ensure that DBEs had done the work for which credit was claimed. The certification is for the purpose of ensuring accountability for monitoring which the regulation already requires. The MaineDOT will certify these contracts through review of CUF forms, Elations sub-contract payment tracking as well as occasional on-site reviews of projects and through the project's final closeout documentation provided by our Contracts Section.

105.10.1.6 Bidders' List Survey Pursuant to 49 CFR 26.11 the MaineDOT is required to "create and maintain" a bidders list and gather bidder information on our construction/consultant projects, Contractors will maintain information on all subcontract bids submitted by DBE and Non-DBE firms and provide that information to the Department. The Following information is required:

Firm Name
Firm Address
Firm status (DBE or non-DBE)
Age of firm (years)
And the annual gross receipts amount as indicated by defined brackets, i.e. $500,000 to $800,000, rather than requesting exact figures.

Not only is this information critical in determining the availability of DBE businesses relative to other businesses that do similar work, but the Federal Highway Administration requires that we obtain this information.

December 5, 2011
Supersedes December 1, 2010

SPECIAL PROVISION
SECTION 105
GENERAL SCOPE OF WORK
(Buy America Certification)

105.11 Federal Requirements Add the following as the third and subsequent paragraphs:

"Prior to payment by the Department, the Contractor shall provide a certification from the producer of steel or iron, or any product containing steel or iron as a component, stating that all steel or iron furnished or incorporated into the furnished product was manufactured in the United States in accordance with the requirements of the Buy America provisions of 23 CFR 635.410, as amended. Such certification shall also include (1) a statement that the iron or steel product or component was produced entirely within the United States, or (2) a statement that the iron or steel product or component was produced within the United States except for minimal quantities of foreign steel and iron valued at $ (actual value).

All manufacturing processes must take place domestically. Manufacturing begins with the initial melting and mixing, and continues through the coating stage. Any process which modifies the chemical content, the physical size and shape, or the final finish is considered a manufacturing process. These processes include rolling, extruding, machining, bending, grinding, drilling, and coating. "Coating" includes epoxy coating, galvanizing, painting, or any other coating that protects or enhances the value of the material.

A Buy America Certification is required from each manufacturer, fabricator, supplier, subcontractor, etc. that meets the "manufacturing" definition above.

Buy America does not apply to raw materials (iron ore and alloys), scrap, pig iron, or processed, pelletized, and reduced iron ore."

SPECIAL PROVISION
SECTION 106
QUALITY
(Quality Level Analysis- Structural Concrete)

106.7.1 Standard Deviation Method Under H. Replace the Method A payfactor with the following;

"Method A: PF = [32.5 + (Quality Level * 0.75)] * 0.01"

SPECIAL PROVISION
SECTION 107
(Coast Guard Notification)

All documents for the US Coast Guard must be submitted through the Maine DOT. The Coast Guard will not consider requests made by the contractor.

Attached are the Coast Guard requirements for this bridge

U.S. Coast Guard Bridge Administration

GENERAL CONSTRUCTION REQUIREMENTS

1. All bridge closures, or bridge operating schedule changes, must be requested in writing, 30 days in advance, from the First Coast Guard District Bridge Branch Office. No channel restrictions, or vertical clearance reductions may be made without written approval from the above office. Waterway closures or safety zones must also be requested 90 days in advance.

2. All submissions to the Coast Guard for review and approval must first be approved by the *owner of the bridge or their authorized agent*. All submission of plans, scope of work, and schedules of operation must be sent to the First Coast Guard District, Bridge Branch Office.

3. At least 30 days prior to commencement of any work**,** we must have for our review, a copy of the construction plans, contractor schedule, preferably depicted in a time line graphic format, and the contractor's daily hours of operation. The construction plan package must show the following: **(1)** a plan of the entire waterway area in the vicinity of the project. **(2)** The location of work barges and any anchor lines during working and off-hours. **(3)** In addition, a drawing must be included, if applicable, depicting any scaffolding or containment used indicating the location and the total vertical or horizontal channel reduction. All vertical clearance reductions below low steel or concrete under the bridge as a result of the use of scaffolding must be clearly detailed on the drawings shown in total feet. **(4)** Emergency 24 hour telephone numbers for all responsible individuals for this project must be submitted to this office before any phase of construction begins in case of an emergency situation during off-hours.

4. Scaffolding used under ANY span of the bridge must be lighted with constant burning red lights every 50 feet and on all corners. The placement of scaffolding must not interfere with the ability of a moveable bridge to open for vessel traffic. Moveable bridges must continue to operate according to their normal schedule unless special drawbridge operation regulation changes have been requested. Warning signs must be posted on both sides of the bridge, visible for a 1-mile range, to warn mariners of the vertical clearance reduction. The signs shall face upstream and downstream so as to draw the mariner's attention to the fact that the clearance has been reduced.

5. All barges placed in the waterway must be lighted with constant burning white lights on all four corners of the barge. The contractor is required to comply with all provisions of the Navigation Rules International-Inland**,** regarding the use of work barges or floating equipment in the waterway. Copies are available from the U.S. Government Bookstore, 710 N Capitol Street NW, Washington, DC, 20403, (202) 512-0132, or www.navcen.uscg.gov .

6. Placement of construction barges in the navigable channel shall be done so as to

provide a minimum horizontal clearance reduction. Only one navigation channel of a swing bridge may be blocked by work equipment at anytime. Barges must be moved out of the navigable channel after working hours unless approved in writing by this office.

7. Barges held in place by anchor lines must be marked by anchor buoys, which should be lighted.
8. An as-built survey must be taken upon completion of this project, approved by a professional engineer or land surveyor verifying the bridge clearances.
9. The on-scene contractor must have a VHF-FM marine radio set to the bridge communication channels 16/13 or the designated channel for the bridge. Additional marine radios monitoring the above channels must also be maintained at the main control of any floating equipment or barges on station.
10. Preventive measures must be taken to prevent any hot work, debris, or construction material from entering the waterway. This includes sandblasting material, paint, and any concrete work by-products. Welding and burning must cease upon approach of a vessel and shall not start again until the vessel has passed the bridge.
11. The Contractor must contact Coast Guard Sector Northern New England via marine radio before commencement of any and after completion of any Hot Work. A cell phone back-up may be used to contact the above Coast Guard Unit at (207) 780-3251.
12. If permanent bridge navigational lighting cannot be maintained operational during any phase of this project, temporary battery/power lights must be installed at the same locations. These temporary lights must be visible for a distance of **2,000 yards on 90% of the nights of the year**. Generally, a lamp of **(50 candela)** will meet these requirements. Plans for temporary lighting shall be submitted to this office for written approval. Deviations from the approved temporary lighting shall be permitted only upon written authorization from this office.
13. **All newly constructed bridge piers, or those in the process of demolition, must be lighted with either red or white flashing (60 flashes per minute) lights. All cofferdams used during construction must also be lighted with red or white flashing (60 flashes per minute) on all four corners.**
14. Bridge protective fenders shall not be constructed or rebuilt with any metal surfaces on the rubbing face of the fender system. All bolts, spikes, or other metal fastening devices must be countersunk. Metal splicing plates, if used, shall be mounted on back of outer wales.
15. All piles including those previously damaged or broken that are not being used in the new or repaired fender shall be extracted rather than cut off at the mud line. Upon completion of all fender repairs a bottom sweep is required to determine if any piles or debris are present in the waterway. A wire-drag sweep or side-scan sonar is the preferred method.
16. During the progress of work should any debris or equipment enter the waterway and become a hazard to navigation, immediate notice shall be given to the Coast Guard

and the object removed as soon as possible. Until removal can be effected, the obstruction shall be properly marked.

17. Spillage of oil and hazardous substances is specifically prohibited by the **Federal Water Pollution Control Act**, as amended. Approved spill containment equipment and absorbent material must be located at the project site in the event of a spill into the waterway or the shoreline. The Coast Guard must be notified immediately at (800) 424-8802.

18. The bridge owner is responsible to ensure that channel depths are not affected by this work. Any material, machinery or equipment lost, dumped, thrown into, or otherwise entering the waterway must be removed immediately. If immediate removal is impractical and the object entering the waterway could possibly obstruct or hazard navigation, the object must be marked immediately to protect navigation and the Coast Guard shall be notified as soon as possible. Upon request of the Coast Guard or Corps of Engineers, the bridge owner/contractor shall provide the necessary equipment and personnel to determine the presence of any suspected obstructions in the waterway.

19. The bridge owner/contractor shall provide any and all necessary equipment and personnel to determine the presence of any "suspected" obstructions in the waterway at any time either during or following the completion of bridge construction or demolition operations.

20. Upon project completion, the bridge owner shall provide the Coast Guard with a written certification by a registered professional engineer that the waterway depths have not been impaired as a result of any construction or demolition operations, that the waterway is clear of any and all construction debris or remnants from the existing or previous bridge construction or demolition.

21. This approval may be revoked and/or civil penalties imposed for failure to ensure that the above listed stipulations are adhered to or if work is determined to hazard or impair navigation.

SPECIAL PROVISION
SECTION 107
PROSECUTION AND PROGRESS
(Contract Time)

The specified contract completion date is December 31, 2015

SPECIAL PROVISION
SECTION 107
TIME
(Supplemental Liquidated Damages)

The new bridge shall be open to unrestricted traffic by July 2, 2015. Open to unrestricted traffic is defined as having membrane, base and surface lifts of pavement, bridge rail, with the approaches having base pavement and approach guardrail or temporary concrete barrier.

The Contractor will be assessed Supplemental Liquidated Damages at the rate of five hundred dollars ($500) per Day for each Day that the new bridge is not open to unrestricted traffic after the July 2, 2015 deadline.

FRP Composite Test Piles shall be received, transported, filled with concrete, driven, dynamic load tested, integrity tested, cured, extracted and transported to the University of Maine, Orono, in accordance with Special Provision 501 Foundation Piles, no later than October 31, 2013.

The Contractor will be assessed Supplemental Liquidated Damages at the rate of one hundred dollars ($100) per Day for each Day that the FRP Composite Test Pile work is not completed after the October 31, 2013 deadline.

These assessments of supplemental liquidated damages will be in addition to the liquidated damages specified in Section 107 of the Standard Specifications.

Once the Contractor commences work on this project the work shall be continuous through completion unless the work stoppage is allowed by the Resident.

SPECIAL PROVISION
SECTION 107
TIME
(Supplemental Liquidated Damages for Fabrication Time)

Append Section 107.8 with the following:

107.8.1 Fabrication Time

The Department has budgeted for the following amounts of continuous fabrication/shop inspection for certain Work components:

Element	Time	Supplemental LD
1) Structural Steel Fabrication	365 calendar days	$650 per calendar day
2) Precast Prestressed Concrete Deck Panels	110 calendar days	$650 per calendar day

The Contractor is responsible for requiring their fabricators, manufacturers, and/or suppliers to produce these products for the Work continuously until finished, including any needed actions to correct unacceptable workmanship or materials. If the Department determines that shop inspection beyond these times is required, then the corresponding Supplemental Liquidated Damages will be deducted as they occur from amounts otherwise due the Contractor. The Contractor will be notified by the Department when these times begin and when the allotted time will expire.

If a fabricator or supplier works more than one shift per day and the Department determines that inspection is required for each shift, each shift will count as a calendar day and the LD rate will be the noted amount per shift per calendar day in lieu of per calendar day.

Inspection is required for the following activities:

For metal fabrication work - welding, including tack welding, heat correcting, non-destructive examination, assembly verification, galvanizing, and painting (see also Special Provision 506).

For concrete work - tensioning of strands, batching and casting of concrete, breaking of test cylinders, de-tensioning.

SPECIAL PROVISION
SECTION 107
TIME

107.4.2 Schedule of Work Required. This Section is amended by the following:

In addition to the Contractors initial CPM Schedule, the Department will require the Contractor to update the schedule monthly to show current progress. The submittal date for monthly updates shall be determined by the Resident.

SPECIAL PROVISION
SECTION 107
TIME
(Scheduling of Work – Projected Payment Schedule)

Description The Contractor shall also provide the Department with a Quarterly Projected Payment Schedule that estimates the value of the Work as scheduled, including requests for payment of Delivered Materials. The Projected Payment Schedule must be in accordance with the Contractor's Schedule of Work and prices submitted by the Contractor's Bid. The Contractor shall submit the Projected Payment Schedule as a condition of Award.

SPECIAL PROVISION
SECTION 107
SCHEDULING OF WORK

Replace Section 107.4.2 with the following:

"107.4.2 Schedule of Work Required Within 21 Days of Contract Execution and before beginning any on-site activities, the Contractor shall provide the Department with its Schedule of Work. The Contractor shall plan the Work, including the activity of Subcontractors, vendors, and suppliers, such that all Work will be performed in Substantial Conformity with its Schedule of Work. The Schedule must include sufficient time for the Department to perform its functions as indicated in this Contract, including QA inspection and testing, approval of the Contractor's TCP, SEWPCP and QCP, and review of Working Drawings.

At a minimum, the Schedule of Work shall include a bar chart which shows the major Work activities, milestones, durations, **submittals and approvals**, and a timeline. Milestones to be included in the schedule include: (A) start of Work, (B) beginning and ending of planned Work suspensions, (C) Completion of Physical Work, and (D) Completion. If the Contractor Plans to Complete the Work before the specified Completion date, the Schedule shall so indicate.

Any restrictions that affect the Schedule of Work such as paving restrictions or In-Stream Work windows must be charted with the related activities to demonstrate that the Schedule of Work complies with the Contract.

The Department will review the Schedule of Work and provide comments to the Contractor within 20 days of receipt of the schedule. The Contractor will make the requested changes to the schedule and issue the finalized version to the Department."

SPECIAL PROVISION
SECTION 108
PAYMENT
(Asphalt Escalator)

108.4.1 Price Adjustment for Hot Mix Asphalt: For all contracts with hot mix asphalt in excess of 500 tons total, a price adjustment for performance graded binder will be made for the following pay items:

Item 403.102 Mot Mix Asphalt – Special Areas
Item 403.206 Hot Mix Asphalt - 25 mm
Item 403.207 Hot Mix Asphalt - 19 mm
Item 403.2071 Hot Mix Asphalt - 19 mm (Polymer Modified)
Item 403.2072 Hot Mix Asphalt - 19 mm (Asphalt Rich Base)
Item 403.2073 Warm Mix Asphalt - 19 mm
Item 403.208 Hot Mix Asphalt - 12.5 mm
Item 403.2081 Hot Mix Asphalt - 12.5 mm (Polymer Modified)
Item 403.20813 Warm Mix Asphalt - 12.5 mm (Polymer Modified)
Item 403.2083 Warm Mix Asphalt - 12.5 mm
Item 403.209 Hot Mix Asphalt - 9.5 mm (sidewalks, drives, & incidentals)
Item 403.210 Hot Mix Asphalt - 9.5 mm
Item 403.2101 Hot Mix Asphalt - 9.5 mm (Polymer Modified)
Item 403.2102 Hot Mix Asphalt - 9.5 mm (Asphalt Rich Base)
Item 403.2103 Warm Mix Asphalt - 9.5 mm
Item 403.2104 Hot Mix Asphalt - 9.5 mm (3/4" Surface)
Item 403.211 Hot Mix Asphalt – Shim
Item 403.2111 Hot Mix Asphalt – Shim (Polymer Modified)
Item 403.2113 Warm Mix Asphalt - Shim
Item 403.212 Hot Mix Asphalt - 4.75 mm (Shim)
Item 403.2123 Warm Mix Asphalt - 4.75 mm (Shim)
Item 403.213 Hot Mix Asphalt - 12.5 mm (base and intermediate course)
Item 403.2131 Hot Mix Asphalt - 12.5 mm (base and intermediate course Polymer Modified)
Item 403.2132 Hot Mix Asphalt - 12.5 mm (Asphalt Rich Base and intermediate course)
Item 403.2133 Warm Mix Asphalt - 12.5 mm (base and intermediate course)
Item 403.214 Hot Mix Asphalt - 4.75 mm (Surface)
Item 403.2143 Warm Mix Asphalt - 4.75 mm (Surface)
Item 404.70 Colored Hot Mix Asphalt – 9.5mm (Surface)
Item 404.72 Colored Hot Mix Asphalt – 9.5mm (Islands, sidewalks, & incidentals)
Item 461.13 Maintenance Surface Treatment

Price adjustments will be based on the variance in costs for the performance graded binder component of hot mix asphalt. They will be determined as follows:

The quantity of hot mix asphalt for each pay item will be multiplied by the performance graded binder percentages given in the table below times the difference in price between the base price and the period price of asphalt cement. Adjustments will be made upward or downward, as prices increase or decrease.

Item 403.102–6.2%			
Item 403.206–4.8%			
Item 403.207–5.2%	Item 403.2071–5.2%	Item 403.2072–5.8%	Item 403.2073–5.2%
Item 403.208–5.6%	Item 403.2081–5.6%	Item 403.20813–5.6%	Item 403.2083–5.6%
Item 403.209–6.2%			
Item 403.210–6.2%	Item 403.2101–6.2%	Item 403.2102–6.8%	Item 403.2103–6.2%
Item 403.2104–6.2%			
Item 403.211–6.2%	Item 403.2111–6.2%		Item 403.2113–6.2%
Item 403.212–6.8%			Item 403.2123–6.8%
Item 403.213–5.6%	Item 403.2131–5.6%	Item 403.2132–6.2%	Item 403.2133–5.6%
Item 403.214–6.8%			Item 403.2143–6.8%
Item 404.70–6.2%			
Item 404.72–6.2%			
Item 461.13–6.4%			

Hot Mix Asphalt**:** The quantity of hot mix asphalt will be determined from the quantity shown on the progress estimate for each pay period.

Base Price: The base price of performance graded binder to be used is the price per standard ton current with the bid opening date. This price is determined by using the average New England Selling Price (Excluding the Connecticut market area), as listed in the Asphalt Weekly Monitor.

Period Price: The period price of performance graded binder will be determined by the Department by using the average New England Selling Price (Excluding the Connecticut market area), listed in the Asphalt Weekly Monitor current with the paving date. The maximum Period Price for paving after the adjusted Contract Completion Date will be the Period Price on the adjusted Contract Completion Date.

SPECIAL PROVISION
SECTION 109.5
ADJUSTMENTS FOR DELAY
(Delays due to Flooding)

Subsection 109.5.1, Definitions- Types of Delays, is replaced with the following:

109.5.1 Definitions - Types of Delays Delays are defined as follows and may be divided into more than one type depending upon cause.

A. Excusable Delay Except as expressly provided otherwise by this Contract, an "Excusable Delay" is a Delay to the Critical Path that is directly and solely caused by: (1) an Uncontrollable Event, or (2) a flooding event at the effected location of the Project that results in a Q25 headwater elevation, or greater, but less than a Q50 headwater elevation. Theoretical headwater elevations will be determined by the Department; actual headwater elevations will be determined by the Contractor and verified by the Department.

B. Compensable Delay A "Compensable Delay" is a Delay to the Critical Path that is directly and solely caused by: (1) a weather related Uncontrollable Event of such an unusually severe nature that a Federal Emergency Disaster is declared. The Contractor will only be entitled to an Equitable Adjustment if the Project falls within the geographic boundaries prescribed under the disaster declaration (2) an Uncontrollable Event caused by a Utility Company or other third party (not Subcontractors) Working on Project-related Work within the Project Limits if, and only if, the Utility Company or such other third party offers the Department reimbursement for such Delay~~,~~ (3) acts by the Department that are in violation of applicable laws or the Contract, or (4) a flooding event at the effected location of the Project that results in a Q50 headwater elevation, or greater. Theoretical Q50 headwater elevations will be determined by the Department; actual headwater elevations will be determined by the Contractor and verified by the Department.

C. Inexcusable Delay "Inexcusable Delays" are all Delays that are not Excusable Delays or Compensable Delays.

For a related provision, see Section 101.2 - Definition of Uncontrollable Event.

SPECIAL PROVISION
SECTION 202
(Removing Existing Bridge)

Description

This work shall include the complete removal and satisfactory disposal of the existing Maine Kennebec Bridge, except such portions thereof as may be required or permitted to be left in place. This provision neither amends nor modifies other provisions of Section 202 except as specified below.

Construction Requirements

The Contractor shall provide detailed demolition plans. The plans shall include, but shall not be limited to, the proposed method(s) of removal, all required falsework, protective structures, and equipment needed to safely accomplish the bridge removal. The Contractor shall proceed with demolition no earlier than 10 business days after the demolition plan has been submitted to the Resident.

All materials consisting of hazardous substances such as lead paint, asbestos, petroleum products, or other substances of potential harm to the public or the environment shall be handled, stored, treated and disposed of in accordance with local, state and federal environmental regulations. The Contractor shall hire an environmental specialist to prepare a materials handling plan to be followed during the demolition.

The Contractor shall contain all demolition debris (including debris from wearing surface removal, saw cut slurry, dust, etc.) and shall not allow it to discharge to any regulated resource. All demolition debris shall be disposed of in accordance with requirements of the Standard Specifications and of the Maine Solid Waste Law, Title 38 M.R.S.A., Section 1301 et seq. Containment and disposal of demolition debris shall be addressed in the Contractor's Soil Erosion and Water Pollution Control Plan (SEWPCP).

The Contractor shall dismantle the existing bridge structure in a manner that will not cause damage to persons or property. Strict adherence to the Special Provision 656 and other precautions, including protective structures as required or ordered, shall be taken to insure that no debris is allowed to fall into the river below.

The Contractor shall not disturb any utility or property carrying water, sewer, gas, communications, electric or similar service across or under the bridges unless permitted to do so by the Resident.

The existing Piers No. 4, 5 & 6 and the upstream and downstream dolphins shall be removed to EL. -22.7 or a minimum of 1 foot below the streambed, whichever is lower. The remainder of the existing bridge piers shall be removed to a minimum of 1 foot below streambed. The existing abutments shall be removed to a minimum of 2 feet below existing

grade. Abutment elements to remain shall have a minimum of 2 feet of cover and displaced existing riprap at each abutment shall be reused as directed by the Resident. Regrade behind each abutment with slopes no steeper than 2:1. Areas disturbed during removal of the existing bridge abutments shall be loam and seeded.

The Contractor shall submit documentation of the removal of the existing bridge with as-built, full-sized drawings in accordance with Special Condition 12 of The Department of the Army Permit to the Resident within 14 days of completion of bridge removal.

An unknown, potentially-historic, timber "Block House" obstruction approximately 35 feet by 15 feet by 12 feet is located on the eastern side of existing Pier 6. The Contractor shall remove it and store it in a lay down area to be inspected and evaluated by a representative of the Maine Historic Preservation Commission (MHPC). The Contractor shall plan to extract the Block House without damaging the existing timbers by using a diver and straps or other approved methods. The bridge demolition plan shall include methods for removing the Block House. Items to be retained shall be delivered to the Colburn House on Arnold Road in Pittston, ME, approximately 11 miles from the project site. Unwanted items shall become property of the Contractor.

Method of Measurement

Removing Existing Bridge will be measured by the lump sum and will include the removal of the superstructure, including structural and incidental steel components, reinforced concrete, bridge lighting, rail, and substructure (abutments, piers and wingwalls) to the extent specified on the plans and herein. It shall also include the removal of approach guardrail and installation and removal of cofferdams. Block House removal including all necessary labor, equipment and delivery to the Colburn House shall be considered incidental.

Basis of Payment

The accepted quantity of Removing Existing Bridge will be paid for at the contract lump sum price, which shall be full compensation for removing and disposing of the existing bridge, Block House and associated items to the extent specified on the plans and herein. Loam and seeding shall be paid for under appropriate contract items.

Payment will be made under:

Pay Item		Pay Unit
202.19	Removing Existing Bridge	Lump Sum

SPECIAL PROVISION
SECTION 202
REMOVAL OF STRUCTURES AND OBSTRUCTIONS

The following shall be added to the Standard Specifications.

Removing Building No. 1 is for the building located approximately 108+50 left. This building shall not be removed until after July 1, 2013 in order to prevent interference with the archeological investigation. Removing Building No. 2 is for the building and detached garage located approximately 129+50 left and 130 +50 left. Removal shall include the structure foundations and filling of remaining cellar cavities. Foundations shall be removed to two feet below finished grade.

With the "Notice to Proceed", or when a building becomes available to the Contractor, the Department will designate whether rodent control measures are required or not.

The Contractor shall not remove a building until the Department has certified it to be free of rodents. Should rodent control measures be required, the Contractor shall procure the extermination services as soon as possible. The Department will re-inspect the building within seven days after the extermination services are performed. The cost of extermination services until the building is found to be rodent free will be paid for as a specialty Pay Item under Section 109.3 - Extra Work.

Each building shall be removed promptly after notification that it is free of rodents. All subsequent inspection costs and extermination services necessary to assure that the building is rodent free at time of removal will be at the expense of the Contractor.

This building may or may not contain asbestos. Prior to any demolition of building(s) the Contractor will conduct an asbestos survey on the building(s) to determine if any asbestos exists. The survey will be conducted by a DEP certified Asbestos Inspector. No separate payment will be made for the survey and it shall be considered incidental. The survey results will be communicated with the Resident. If no asbestos is discovered, the demolition process may proceed. If asbestos is found, the Contractor will employ a DEP certified Asbestos Abatement Contractor for its removal and disposal. The Department will bear all expenses incurred in the abatement of any asbestos containing material as detailed in Standard Specification 109.7 – Equitable Adjustments to Compensation. Any questions can be directed to the Office of Legal Service (624-3020).

The Contractor shall remove all utility service connections prior to demolition of any building. The Contractor shall coordinate disconnection of overhead utilities with the appropriate utility companies.

The buildings are serviced by a private septic system or cistern. The system shall be pumped out to remove waste material prior to demolition work. The septic system shall be removed or broken up and backfilled to the limits of the surrounding ground.

All fill material used for foundation cavities, septic systems and other shall meet the Standard Specification requirements for Common Borrow, Section 703.18.

Removal of building shall include all attached structures including barns and garages as well as steps, slabs, walks, piers, posts, driveways and other incidentals, as directed by the Resident.

Contractor shall provide and maintain all temporary barricades, signs or other safety measures as necessary to complete the work. Contractor shall obtain any and all permits or licenses necessary for the performance of the work and conform to all Federal, State and local laws, regulations or ordinances applicable to the work.

The buildings have oil/fuel tanks that will need to be disposed of. The fuel is a regulatory material and may be reused or disposed of in accordance to local, state, and federal regulations. The tanks shall also be disposed of in accordance to local, state, and federal regulations.

For Building #1, the well in front of the property shall be abandoned in accordance with CMR CHAPTER 232 – Well Drillers and Pump Installer Rules. A Maine Licensed Well Driller shall be employed to properly abandon the potable water supply in accordance with Chapter 7 of the above referenced rules.

For Building #2, the well shall remain.

SPECIAL PROVISION
SECTION 203
EXCAVATION AND EMBANKMENT
(Dredge Materials)

Description: Dredge Material (See MaineDOT Standard Specifications § 101.2) is regulated as a Special Waste. Applicable regulations allow for the on-site Beneficial Use of 100 cubic yards of this special waste. Further, select granular materials are exempt from the Dredge Material classification as long as specific regulatory requirements are met. The vast majority of Dredge Material from the Maine Kennebec Bridge Replacement Project is granular in nature and meets the grain size exemption for Beneficial Use at the site of generation. The remaining Dredge Material planned for excavation is not expected to exceed 100 cubic yards.

Work associated with the Maine Kennebec Bridge Replacement initiative will require the excavation of select Dredge Material. With the exception of a thin veneer of silts and clays it is anticipated that the Dredge Material will meet the granular Beneficial Use exemption. The anticipated volume of silts and clays requiring excavation is not expected to exceed 100 cubic yards. There is onsite Beneficial Use for all of this Dredge Material. The contractor shall Beneficially Use all Dredge Material (including the silts and clays as well as the granular materials) excavated at the Maine Kennebec Bridge Replacement Project in an area adjacent to and draining into the dredged water body.

It is acknowledged that the excavation of Dredge for this work may include some boulders. The Maine Department of Environmental Protection has determined that sound boulders (rock 12-inches or more in diameter), that are free of adhering sediment or other contaminants, shall be deemed to be Inert Fill material and shall not be included in the Dredge Material Quantities.

CONSTRUCTION REQUIREMENTS

Management: The contractor shall Beneficially Use all Dredge Material excavated at the Maine Kennebec Bridge Replacement initiative in areas adjacent to and draining into the dredged water body.

Method of Measurement: Dredge Material will be measured by the cubic yard of material removed.

Basis of Payment: Payment for the Beneficial Use of Dredge Material will be incidental to the Contract Pay Items.

Payment shall be full compensation for excavation, dewatering, managing, transporting, and placement of the Dredge Materials.

SPECIAL PROVISION
SECTION 304
AGGREGATE BASE AND SUBBASE COURSE
(Aggregate Subbase)

If the Contractor wishes to route public traffic over the completed aggregate subbase course, the course shall be constructed with a minimum 50 mm [2 in] surcharge above the design grade, except as described below. Whenever the surcharge is used, it shall be constructed with material meeting the requirements underlying Aggregate. Also, whenever, the surcharge is used, it shall be placed on all the aggregate subbase course subjected to public driveways, sidewalks, approach roads, or the outer portions of the shoulders. Removal of the surcharge shall be followed immediately in succession by the fine grading of the aggregate subbase and construction of the next course.

The furnishing, placing, maintaining, and removal of the surcharge will not be paid for directly, but will be considered incidental to the Aggregate Subbase Course pay item.

SPECIAL PROVISION
SECTION 403
HOT MIX ASPHALT PAVEMENT

401 HOT MIX ASPHALT LONGITUDINAL JOINT DENSITY

401.30 Description The Department will measure the pavement density of longitudinal joints constructed between adjoining mainline travel lanes. Core samples shall be tested according to AASHTO T-166. The Department will randomly determine core locations. The Contractor shall cut 6 in [150 mm] diameter cores at no additional cost to the Department by the end of the working day following the day the pavement is placed, and immediately give them to the Department. The cores will be placed in a transport container provided by the Department and transported by the Contractor to the designated MaineDOT Lab as directed by the Department. Cores shall not be cut except for verification at a rate not to exceed 3 per day or 2 per 1000 ton [1000 Mg] placed. Pre-testing of the acceptance cores will not be allowed. At the time of sampling, the Contractor and the Department shall mutually determine if a core is damaged. If it is determined that the core(s) is damaged, the Contractor shall cut new core(s) at the same offset and within 3 ft [1 m] of the initial sample. At the time the core is cut, the Contractor and the Department will mutually determine if saw cutting of the core is needed, and will mark the core at the point where sawing is needed. The core may be saw cut by the Contractor in the Department's presence onsite, or in an MaineDOT Lab by The Department, without disturbing the layer being tested to remove lower layers of Hot Mix Asphalt Pavement, gravel, or RAP. No recuts are allowed at a test location after the core has been tested. A minimum of five centerline joint cores will be obtained for each lot. Upon conclusion of each lot, density results shall be examined for statistical outliers as stated in Section 106.7.2.

Cores shall be taken directly over the construction joint. Should the notched wedge joint device be used, the cores shall be cut directly over the taper portion of the wedge (approximately centered 3” from the visible joint).

If the pay factor for Density falls below 0.80 for Method A or C, or 0.86 for Method B, the Contractor shall make corrective action to the longitudinal joint density construction method before proceeding with the Lot, or before starting a new Lot. In cases where the corrective action can be shown to immediately increase density, such as with informational cores or density gauge readings, the Contractor may elect to resume production once the corrective action methods are established. Additional QC testing shall be performed to verify the effectiveness of the corrective action.

Should the pay factor for Density remain at or fall below the specified action limit of 0.80 for Method A or C, or 0.86 for Method B, then the Contractor shall be required to make further adjustments to the construction method. The Department will consider corrective action acceptable if the density pay factor increases based on independent verification samples or acceptance samples.

401.31 Acceptance This method utilizes Quality Level Analysis and pay factor specifications as described in Section 106. For Hot Mix Asphalt Pavement designated for acceptance under Quality Assurance provisions, the Department will sample once per sublot on a statistically random basis, test, and evaluate in accordance with the following Acceptance Criteria:

TABLE 1: ACCEPTANCE CRITERIA

PROPERTIES	POINT OF SAMPLING	LOT SIZE	SUBLOT SIZE	TEST METHOD
%TMD (Centerline Joint)	Completed centerline joint	5000 ft* [1520 m]	1000 ft [300 m]	AASHTO T269

* Lot size will not exceed 7500 ft [2280 m]. Projects longer than 7500 ft [2280 m] will be divided into two or more lots. Partial lots will be included in the previous lot if equal to or less than one-half the size of a normal lot. If greater than one-half the normal lot size, it will be tested as a separate lot.

The Department will determine a pay factor using acceptance limits from Table 2.

TABLE 2: METHOD A DENSITY ACCEPTANCE LIMITS

	LSL
Percent of Maximum Theoretical Density*	91.0

* The Theoretical Maximum Density will be determined from the average of the Gmm values used to determine the percent compaction of the nearest acceptance cores on either side of the Centerline Joint Core from each adjacent mat.

The Department will calculate the Pay Adjustment for Centerline Joint Density as follows:

PA = (joint density PF- 1.0)(Q)(P) x0.40

Where

PA = Pay Adjustment
Q = Quantity of traveled way pavement represented by PF in tons [Mg]
P = Contract price per ton [Mg]
PF = Pay Factor

If the joint density Pay Factor is less than 0.88, the Pay Adjustment shall be:

PA = (-0.05)(Q)(P)

SPECIAL PROVISION
DIVISION 400
PAVEMENTS

SECTION 401 - HOT MIX ASPHALT PAVEMENT

401.01 Description The Contractor shall furnish and place one or more courses of Hot Mix Asphalt Pavement (HMA) on an approved base in accordance with the contract documents and in reasonably close conformity with the lines, grades, thickness, and typical cross sections shown on the plans or established by the Resident. The Department will accept this work under Quality Assurance provisions, in accordance with these specifications and the requirements of Section 106 – Quality, the provisions of AASHTO M 323 except where otherwise noted in sections 401 and 703 of these specifications, and the Maine DOT Policies and Procedures for HMA Sampling and Testing.

401.02 Materials Materials shall meet the requirements specified in Section 700 - Materials:

Asphalt Cement	702.01
Aggregates for HMA Pavement	703.07
HMA Mixture Composition	703.09

401.021 Recycled Asphalt Materials Recycled Asphalt Pavement (RAP) may be introduced into the mixture at percentages approved by the Department according to the Maine DOT Policies and Procedures for HMA Sampling and Testing. If approved by the Department, the Contractor shall provide documentation stating the source, test results for average residual asphalt content, and stockpile gradations showing RAP materials have been sized to meet the maximum aggregate size requirements of each mix designation. The Department will obtain samples for verification and approval prior to its use.

For specification purposes, RAP will be categorized as follows:

Class III – The Contractor may use a maximum of 10 percent Class III RAP in any base, binder, surface, or shim course. Class III RAP will be allowed in hand-placed mixes for item 403.209 at a rate of up to 20 percent.

Class II – The Contractor may use a maximum of 20 percent Class II RAP in any base, binder, surface, or shim course.

Class I – The Contractor may use a maximum of 30 percent Class I RAP in any base, binder, surface, or shim course provided that PG 58-34 asphalt binder is used in the mixture. A PG 52-34 may be used when approved by the Department.

In the event that RAP source or properties change, the Contractor shall notify the Department of the change and submit new documentation stating the new source or properties a minimum of 72 hours prior to the change to allow for obtaining new samples and approval.

401.03 Composition of Mixtures The Contractor shall compose the Hot Mix Asphalt Pavement with aggregate, Performance Graded Asphalt Binder (PGAB), and mineral filler if required. HMA shall be designed and tested according to AASHTO R35 and the volumetric criteria in Table 1. The Contractor shall size, uniformly grade, and combine the aggregate fractions in proportions that provide a mixture meeting the grading requirements of the Job Mix Formula (JMF).

The Contractor shall submit for Department approval a JMF to the Central Laboratory in Bangor for each mixture to be supplied. The Department may approve 1 active design per nominal maximum size, per traffic level, per plant, plus a 9.5mm "fine" mix for shimming and where required, a non-RAP design for bridge decks. The Department shall then have 15 calendar days in which to process a new design before approval. The JMF shall establish a single percentage of aggregate passing each sieve size within the limits shown in section 703.09. The mixture shall be designed and produced, including all production tolerances, to comply with the allowable control points for the particular type of mixture as outlined in 703.09. The JMF shall state the original source, gradation, and percentage to be used of each portion of the aggregate including RAP when utilized, and mineral filler if required. It shall also state the proposed PGAB content, the name and location of the refiner, the supplier, the source of PGAB submitted for approval, the type of PGAB modification if applicable, and the location of the terminal if applicable.

In addition, the Contractor shall provide the following information with the proposed JMF:

- Properly completed JMF indicating all mix properties (Gmm, VMA, VFB, etc.)
- Stockpile Gradation Summary
- Design Aggregate Structure Consensus Property Summary
- Design Aggregate Structure Trial Blend Gradation Plots (0.45 power chart)
- Trial Blend Test Results for at least three different asphalt contents
- Design Aggregate Structure for at least three trial blends
- Test results for the selected aggregate blend at a minimum of three binder contents
- Specific Gravity and temperature/viscosity charts for the PGAB to be used
- Recommended mixing and compaction temperatures from the PGAB supplier
- Material Safety Data Sheets (MSDS) For PGAB
- Asphalt Content vs. Air Voids trial blend curve
- Test report for Contractor's Verification sample
- Summary of RAP test results (if used), including count, average and standard deviation of binder content and gradation

At the time of JMF submittal, the Contractor shall identify and make available the stockpiles of all proposed aggregates at the plant site. There must be a minimum of 150 Mg [150 ton] for stone stockpiles, 75 Mg [75 ton] for sand stockpiles, and 50 Mg [50 ton] of blend sand before the Department will sample. The Department shall obtain samples for laboratory testing. The Contractor shall also make available to the Department the PGAB proposed for use in the mix in sufficient quantity to test the properties of the asphalt and to produce samples for testing of the mixture. Before the start of paving, the Contractor and the Department shall split a production sample for evaluation. The Contractor shall test its split of the sample and determine if the results meet the requirements of the Department's written policy for mix design verification (See Maine DOT Policies and Procedures for HMA Sampling and Testing available at the Central Laboratory in Bangor). If the results are found to be acceptable, the Contractor will forward their results to the Department's Lab, which will test the Department's split of the sample. The results of the two split samples will be compared and shared between the Department and the Contractor. If the Department finds the mixture acceptable, an approved JMF will be forwarded to the Contractor and paving may commence. The first day's production shall be monitored, and the approval may be withdrawn if the mixture exhibits undesirable characteristics such as checking, shoving or displacement.

The Contractor shall be allowed to submit aim changes within 24 hours of receipt of the first Acceptance test result. Should all of the Acceptance samples of a Lot be obtained prior to the receipt of the first Acceptance result, the Department will not allow the aim changes to be applied to that Lot. Adjustments will be allowed of up to 2% on the percent passing the 2.36 mm sieve through the 0.075 mm and 3% on the percent passing the

4.75 mm or larger sieves. Adjustments will be allowed on the %PGAB of up to 0.2%. Adjustments will be allowed on GMM of up to 0.010.

The Contractor shall submit a new JMF for approval each time a change in material source or materials properties is proposed. The same approval process shall be followed. The cold feed percentage of any aggregate may be adjusted up to 10 percentage points from the amount listed on the JMF, however no aggregate listed on the JMF shall be eliminated. The cold feed percentage for RAP may be reduced up to 10 percentage points from the amount listed on the JMF and shall not exceed the percentage of RAP approved in the JMF or for the specific application under any circumstances.

TABLE 1: VOLUMETRIC DESIGN CRITERIA

Design ESAL's (Millions)	Required Density (Percent of G_{mm})			Voids in the Mineral Aggregate (VMA)(Minimum Percent)					Voids Filled with Binder (VFB) (Minimum %)	Fines/Eff. Binder Ratio
				Nominal Maximum Aggregate Size (mm)						
	$N_{initial}$	N_{design}	N_{max}	25	19	12.5	9.5	4.75		
<0.3	≤91.5	96.0	≤98.0	13.0	14.0	15.0	16.0	16.0	70-80	0.6-1.2
0.3 to <3	≤90.5								65-80	
3 to <10	≤89.0								65-80*	
10 to <30										
≥ 30										

*For 9.5 mm nominal maximum aggregate size mixtures, the maximum VFB is 82.
*For 4.75 mm nominal maximum aggregate size mixtures, the maximum VFB is 84.

401.04 Temperature Requirements After the JMF is established, the temperatures of the mixture shall conform to the following tolerances:

In the truck at the mixing plant – allowable range 135° to 163°C [275 to 325°F]
At the Paver – allowable range 135° to 163°C [275 to 325°F]

The JMF and the mix subsequently produced shall meet the requirements of Tables 1 and Section 703.07.

401.05 Performance Graded Asphalt Binder Unless otherwise noted in Special Provision 403 - Hot Mix Asphalt Pavement, the Contractor may utilize either a 64-28 or 58-28 PGAB. The Contractor must stipulate which PGAB grading will be used to construct the entire HMA pavement structure prior to starting work. For mixtures containing greater than 20 percent but no more than 30 percent RAP the PGAB shall be PG 58-34 (or PG 52-34 when approved by the Department). The PGAB shall meet the applicable requirements of AASHTO M320 - Standard Specification for PGAB. The Contractor shall provide the Department with an approved copy of the Quality Control Plan for PGAB in accordance with AASHTO R 26 Certifying Suppliers of PGAB. The Contractor shall request approval from the Department for a change in PGAB supplier or source by submitting documentation stating the new supplier or source a minimum of 24 hours prior to the change. In the event that the PGAB supplier or source is changed, the Contractor shall make efforts to minimize the occurrence of PGAB co-mingling.

401.06 Weather and Seasonal Limitations The State is divided into two paving zones as follows:

a. Zone 1 Areas north of US Route 2 from Gilead to Bangor and north of Route 9 from Bangor to Calais.
b. Zone 2 Areas south of Zone 1 including the US Route 2 and Route 9 boundaries.

The Contractor may place Hot Mix Asphalt Pavement for use other than a traveled way wearing course in either Zone between the dates of April 15th and November 15th, provided that the air temperature as determined by an approved thermometer (placed in the shade at the paving location) is 4°C [40°F] or higher.
The Contractor may place Hot Mix Asphalt Pavement produced with an accepted WMA technology for any base, intermediate base, or shim course in either Zone between the dates of April 15th and November 15th, provided that the air temperature as determined by an approved thermometer (placed in the shade at the paving location) is 2°C [35°F] or higher, and the area to be paved is not frozen. The Hot Mix Asphalt Pavement produced with an approved WMA technology shall meet the requirements of section 401.04 - Temperature Requirements, unless otherwise approved by the Department.

The Contractor may place Hot Mix Asphalt Pavement as traveled way wearing course in Zone 1 between the dates of May 1st and the Saturday following October 1st and in Zone 2 between the dates of April 15th and the Saturday following October 15th, provided the air temperature determined as above is 10°C [50°F] or higher. For the purposes of this Section, the traveled way includes truck lanes, ramps, approach roads and auxiliary lanes. The atmospheric temperature for all courses on bridge decks shall be 10°C [50°F] or higher.

Hot Mix Asphalt Pavement used for curb, driveways, sidewalks, islands, or other incidentals is not subject to seasonal limitations, except that conditions shall be satisfactory for proper handling and finishing of the mixture. All mixtures used for curb, driveways, sidewalks, islands, or other incidentals shall conform to section 401.04 - Temperature Requirements. Unless otherwise specified, the Contractor shall not place Hot Mix Asphalt Pavement on a wet or frozen surface and the air temperature shall be 4°C [40°F] or higher.

On all sections of overlay with wearing courses less than 25 mm [1 in] thick, the wearing course for the travelway and adjacent shoulders shall be placed between the dates of May 15th and the Saturday following September 15th.

On all sections of overlay with wearing courses less than 1 inch thick, the wearing course for the travelway and adjacent shoulders shall be placed between the dates of June 1st and the Saturday following September 1st if the work is to be performed, either by contract requirement, or Contractor option, during conditions defined as "night work".

401.07 Hot Mix Asphalt Plant

401.071 General Requirements HMA plants shall conform to AASHTO M156.

a. Truck Scales When the hot mix asphalt is to be weighed on scales meeting the requirements of Section 108 - Payment, the scales shall be inspected and sealed by the State Sealer as often as the Department deems necessary to verify their accuracy.

Plant scales shall be checked prior to the start of the paving season, and each time a plant is moved to a new location. Subsequent checks will be made as determined by the Resident. The Contractor will have at least ten 20 Kg [50 pound] masses for scale testing.

401.072 Automation of Batching Batch plants shall be automated for weighing, recycling, and monitoring the system. In the case of a malfunction of the printing system, the requirements of Section 401.074 c. of this specification will apply.

The batch plant shall accurately proportion the various materials in the proper order by weight. The entire batching and mixing cycle shall be continuous and shall not require any manual operations. The batch plant

shall use auxiliary interlock circuits to trigger an audible alarm whenever an error exceeding the acceptable tolerance occurs. Along with the alarm, the printer shall print an asterisk on the delivery slip in the same row containing the out-of-tolerance weight. The automatic proportioning system shall be capable of consistently delivering material within the full range of batch sizes. When RAP is being used, the plant must be capable of automatically compensating for the moisture content of the RAP.

All plants shall be equipped with an approved digital recording device. The delivery slip load ticket shall contain information required under Section 108.1.3 - Provisions Relating to Certain Measurements, Mass and paragraphs a, b, and c of Section 401.073

401.073 Automatic Ticket Printer System on Automatic HMA Plant An approved automatic ticket printer system shall be used with all approved automatic HMA plants. The requirements for delivery slips for payment of materials measured by weight, as given in the following Sections, shall be waived: 108.1.3 a., 108.1.3 b., 108.1.3 c., and 108.1.3 d. The automatic printed ticket will be considered as the Weight Certificate.

The requirements of Section 108.1.3 f. - Delivery Slips, shall be met by the weigh slip or ticket, printed by the automatic system, which accompanies each truckload, except for the following changes:

a. The quantity information required shall be individual weights of each batch or total net weight of each truckload.
b. Signatures (legible initials acceptable) of Weighmaster (required only in the event of a malfunction as described in 401.074 c.).
c. The MDOT designation for the JMF.

401.074 Weight Checks on Automatic HMA Plant At least twice during each 5 days of production either of the following checks will be performed:

a. A loaded truck may be intercepted and weighed on a platform scale that has been sealed by the State Sealer of Weights and Measures within the past 12 months. The inspector will notify the producer to take corrective action on any discrepancy over 1.0%. The producer may continue to operate for 48 hours under the following conditions.

1. If the discrepancy does not exceed 1.5%; payment will still be governed by the printed ticket.
2. If the discrepancy exceeds 1.5%, the plant will be allowed to operate as long as payment is determined by truck platform scale net weight.

If, after 48 hours the discrepancy has not been addressed and reduced below 1.0%, than plant operations will cease. Plant operation may resume after the discrepancy has been brought within 1.0%.

b. Where platform scales are not readily available, a check will be made to verify the accuracy and sensitivity of each scale within the normal weighing range and to assure that the interlocking devices and automatic printer system are functioning properly.

c. In the event of a malfunction of the automatic printer system, production may be continued without the use of platform truck scales for a period not to exceed the next two working days, providing total weights of each batch are recorded on weight tickets and certified by a Licensed Public Weighmaster.

401.08 Hauling Equipment Trucks for hauling Hot Mix Asphalt Pavement shall have tight, clean, and smooth metal dump bodies, which have been thinly coated with a small amount of approved release agent to prevent

the mixture from adhering to the bodies. Solvent based agents developed to strip asphalts from aggregates will not be allowed as release agents.

All truck dump bodies shall have a cover of canvas or other water repellent material capable of heat retention, which completely covers the mixture. The cover shall be securely fastened on the truck, unless unloading.

All truck bodies shall have an opening on both sides, which will accommodate a thermometer stem. The opening shall be located near the midpoint of the body, at least 300 mm [12 in] above the bed.

401.09 Pavers Pavers shall be self-contained, self-propelled units with an activated screed (heated if necessary) capable of placing courses of Hot Mix Asphalt Pavement in full lane widths specified in the contract on the main line, shoulder, or similar construction.

On projects with no price adjustment for smoothness, pavers shall be of sufficient class and size to place Hot Mix Asphalt Pavement over the full width of the mainline travel way with a 3 m [10 ft] minimum main screed with activated extensions.

The Contractor shall place Hot Mix Asphalt Pavement on the main line with a paver using an automatic grade and slope controlled screed, unless otherwise authorized by the Department. The controls shall automatically adjust the screed and increase or decrease the layer thickness to compensate for irregularities in the preceding course. The controls shall maintain the proper transverse slope and be readily adjustable so that transitions and superelevated curves can be properly paved. The controls shall operate from a fixed or moving reference such as a grade wire or ski type device (floating beam) with a minimum length of 10 m [30 ft], a non-contact grade control with a minimum span of 7.3 m [24 ft], except that a 12 m [40 ft] reference shall be used on Expressway projects.

The Contractor shall operate the paver in such a manner as to produce a visually uniform surface texture and a thickness within the requirements of Section 401.101 - Surface Tolerances. The paver shall have a receiving hopper with sufficient capacity for a uniform spreading operation and a distribution system to place the mixture uniformly, without segregation in front of the screed. The screed assembly shall produce a finished surface of the required evenness and texture without tearing, shoving, or gouging the mixture. Pavers with extendible screeds shall have auger extensions and tunnel extenders as per the manufacturer's recommendations, a copy of which shall be available if requested.

The Contractor shall have the paver at the project site sufficiently before the start of paving operations to be inspected and approved by the Department. The Contractor shall repair or replace any paver found worn or defective, either before or during placement, to the satisfaction of the Department. Pavers that produce an unevenly textured or non-uniform mat will be repaired or replaced before continuing to place HMA on MaineDOT projects.
On a daily basis, the Contractor shall perform nuclear density testing across the mat being placed, prior to being compacted by equipment., at 300 mm [12 in] intervals, If the density values vary by more than 2.0% from the mean, the Contractor shall make adjustments to the screed until the inconsistencies are remedied.

Failure to replace or repair defective placement equipment may result in a letter of suspension of work and notification of a quality control violation resulting in possible monetary penalties as governed by Section 106 - Quality

401.10 Rollers Rollers shall be static steel, pneumatic tire, oscillatory, or approved vibrator type. Rollers shall be in good mechanical condition, capable of starting and stopping smoothly, and be free from backlash when

reversing direction. Rollers shall be equipped and operated in such a way as to prevent the picking up of hot mixed material by the roller surface. The use of rollers, which result in crushing of the aggregate or in displacement of the HMA will not be permitted. Any Hot Mix Asphalt Pavement that becomes loose, broken, contaminated, shows an excess or deficiency of Performance Graded Asphalt Binder, or is in any other way defective shall be removed and replaced at no additional cost with fresh Hot Mix Asphalt Pavement, which shall be immediately compacted to conform to the adjacent area.

The Contractor shall repair or replace any roller found to be worn or defective, either before or during placement, to the satisfaction of the Department. Rollers that produce grooved, unevenly textured or non-uniform mat will be repaired or replaced before continuing to place HMA on MaineDOT projects.
The type of rollers to be used and their relative position in the compaction sequence shall generally be the Contractor's option, provided specification densities are attained and with the following requirements:

a. On variable-depth courses, the first lift of pavement over gravel, reclaimed pavement, on irregular or milled surfaces, or on bridges, at least one roller shall be 14.5 Mg [16 ton] pneumatic-tired. Unless otherwise allowed by the Resident, pneumatic-tired rollers shall be equipped with skirting to minimize the pickup of HMA materials from the paved surface. When required by the Resident, the roller shall be ballasted to 18.1 Mg [20 ton].

b. Compaction with a vibratory or steel wheel roller shall precede pneumatic-tired rolling, unless otherwise authorized by the Department.

c. Vibratory rollers shall not be operated in the vibratory mode when checking or cracking of the mat occurs, or on bridge decks.

d. Any method, which results in cracking or checking of the mat, will be discontinued and corrective action taken.

The maximum operating speed for a steel wheel or pneumatic roller shall not exceed the manufacturer's recommendations, a copy of which shall be available if requested.

<u>401.101 Surface Tolerances</u> The Department will check surface tolerance utilizing the following methods :

a.) A 5 m [16 ft] straightedge or string line placed directly on the surface, parallel to the centerline of pavement.
b.) A 3 m [10 ft] straightedge or string line placed directly on the surface, transverse to the centerline of pavement.

The Contractor shall correct variations exceeding 6 mm [¼ in] by removing defective work and replacing it with new material as directed by the Department. The Contractor shall furnish a 10 foot straightedge for the Departments use.

<u>401.11 Preparation of Existing Surface</u> The Contractor shall thoroughly clean the surface upon which Hot Mix Asphalt Pavement is to be placed of all objectionable material. When the surface of the existing base or pavement is irregular, the Contractor shall bring it to uniform grade and cross section. All surfaces shall have a tack coat applied prior to placing any new HMA course. Tack coat shall conform to the requirements of Section 409 – Bituminous Tack Coat, Section 702 – Bituminous Material, and all applicable sections of the contract.

401.12 Hot Mix Asphalt Documentation The Contractor and the Department shall agree on the amount of Hot Mix Asphalt Pavement that has been placed each day.

401.13 Preparation of Aggregates The Contractor shall dry and heat the aggregates for the HMA to the required temperature. The Contractor shall properly adjust flames to avoid physical damage to the aggregate and to avoid depositing soot on the aggregate.

401.14 Mixing The Contractor shall combine the dried aggregate in the mixer in the amount of each fraction of aggregate required to meet the JMF. The Contractor shall measure the amount of PGAB and introduce it into the mixer in the amount specified by the JMF.

The Contractor shall produce the HMA at the temperature established by the JMF.

The Contractor shall dry the aggregate sufficiently so that the HMA will not flush, foam excessively, or displace excessively under the action of the rollers. The Contractor shall introduce the aggregate into the mixer at a temperature of not more than 14°C [25°F] above the temperature at which the viscosity of the PGAB being used is 0.150 Pa•s.

The Contractor shall store and introduce into the mixer the Performance Graded Asphalt Binder at a uniformly maintained temperature at which the viscosity of the PGAB is between 0.150 Pa•s and 0.300 Pa•s. The aggregate shall be coated completely and uniformly with a thorough distribution of the PGAB. The Contractor shall determine the wet mixing time for each plant and for each type of aggregate used.

401.15 Spreading and Finishing On areas where irregularities or unavoidable obstacles make the use of mechanical spreading and finishing equipment impracticable, the Contractor shall spread, rake, and lute the HMA with hand tools to provide the required compacted thickness. Solvent based agents developed to strip asphalts from aggregates will not be allowed as release agents.

On roadways with adjoining lanes carrying traffic, the Contractor shall place each course over the full width of the traveled way section being paved that day, unless otherwise noted by the Department in Section 403 - Hot Bituminous Pavement.

401.16 Compaction Immediately after the Hot Mix Asphalt Pavement has been spread, struck off, and any surface irregularities adjusted, the Contractor shall thoroughly and uniformly compact the HMA by rolling.

The Contractor shall roll the surface when the mixture is in the proper condition and when the rolling does not cause undue displacement, cracking, or shoving. The Contractor shall prevent adhesion of the HMA to the rollers or vibrating compactors without the use of fuel oil or other petroleum based release agents. Solvents designed to strip asphalt binders from aggregates will not be permitted as release agents on equipment, tools, or pavement surfaces.
The Contractor shall immediately correct any displacement occurring as a result of the reversing of the direction of a roller or from other causes to the satisfaction of the Department. Any operation other than placement of variable depth shim course that results in breakdown of the aggregate shall be discontinued. Any new pavement that shows obvious cracking, checking, or displacement shall be removed and replaced for the full lane width as directed by the Resident at no cost to the Department.

Along forms, curbs, headers, walls, and other places not accessible to the rollers, the Contractor shall thoroughly compact the HMA with mechanical vibrating compactors. The Contractor shall only use hand

tamping in areas inaccessible to all other compaction equipment. On depressed areas, the Contractor may use a trench roller or cleated compression strips under a roller to transmit compression to the depressed area.

Any HMA that becomes unacceptable due to cooling, cracking, checking, segregation or deformation as a result of an interruption in mix delivery shall be removed and replaced, with material that meets contract specifications at no cost to the Department.

401.17 Joints The Contractor shall construct wearing course transverse joints in such a manner that minimum tolerances shown in Section 401.101 - Surface Tolerances are met when measured with a straightedge.

The paver shall maintain a uniform head of HMA during transverse and longitudinal joint construction.

The HMA shall be free of segregation and meet temperature requirements outlined in section 401.04. Transverse joints of the wearing course shall be straight and neatly trimmed. The Contractor may form a vertical face exposing the full depth of the course by inserting a header, by breaking the bond with the underlying course, or by cutting back with hand tools. The Department may allow feathered or "lap" joints on lower base courses or when matching existing base type pavements.

Longitudinal joints shall be generally straight to the line of travel, and constructed in a manner that best ensure joint integrity. Methods or activities that prove detrimental to the construction of straight, sound longitudinal joints will be discontinued.

The Contractor shall apply a coating of emulsified asphalt immediately before paving all joints to the vertical face and 75 mm [3 in] of the adjacent portion of any pavement being overlaid except those formed by pavers operating in echelon. The Contractor shall use an approved spray apparatus designed for covering a narrow surface. The Department may approve application by a brush for small surfaces, or in the event of a malfunction of the spray apparatus, but for a period of not more than one working day.

Where pavement under this contract joins an existing pavement, or when the Department directs, the Contractor shall cut the existing pavement along a smooth line, producing a neat, even, vertical joint. The Department will not permit broken or raveled edges. The cost of all work necessary for the preparation of joints is incidental to related contract pay items.

401.18 Quality Control Method A, B & C The Contractor shall operate in accordance with the approved Quality Control Plan (QCP) to assure a product meeting the contract requirements. The QCP shall meet the requirements of Section 106.6 - Acceptance and this Section. The Contractor shall not begin paving operations until the Department approves the QCP in writing.

Prior to placing any mix, the Department and the Contractor shall hold a Pre-paving conference to discuss the paving schedule, source of mix, type and amount of equipment to be used, sequence of paving pattern, rate of mix supply, random sampling, project lots and sublots and traffic control. A copy of the QC random numbers to be used on the project shall be provided to The Resident. The Departments' random numbers for Acceptance testing shall be generated and on file with the Resident and the Project Manager. All field and plant supervisors including the responsible onsite paving supervisor shall attend this meeting.

The QCP shall address any items that affect the quality of the Hot Mix Asphalt Pavement including, but not limited to, the following:

a. JMF(s)
b. Hot mix asphalt plant details
c. Stockpile Management (to include provisions for a minimum 2 day stockpile)
d. Make and type of paver(s)
e. Make and type of rollers including weight, weight per inch of steel wheels, and average contact pressure for pneumatic tired rollers
f. Name of QCP Administrator, and certification number
g. Name of Process Control Technician(s) and certification number(s)
h. Name of Quality Control Technicians(s) and certification number(s)
i. Mixing & transportation including process for ensuring that truck bodies are clean and free of debris or contamination that could adversely affect the finished pavement
j. Testing Plan
k. Laydown operations including longitudinal joint construction, procedures for avoiding paving in inclement weather, type of release agent to be used on trucks tools and rollers, compaction of shoulders, tacking of all joints, methods to ensure that segregation is minimized, procedures to determine the maximum rolling and paving speeds based on best engineering practices as well as past experience in achieving the best possible smoothness of the pavement. Solvent based agents developed to strip asphalts from aggregates will not be allowed as release agents.
l. Examples of Quality Control forms including a daily plant report and a daily paving report
m. Silo management and details (can show storage for use on project of up to 36 hours)
n. Provisions for varying mix temperature due to extraordinary conditions.
o. Name and responsibilities of the Responsible onsite Paving Supervisor.
p. Method for calibration/verification of Density Gauge
q. A note that all testing will be done in accordance with AASHTO and the Maine DOT Policies and Procedures for HMA Sampling and Testing.
r. A detailed description of RAP processing, stockpiling and introduction into the plant as well as a note detailing conditions under which the percent of RAP will vary from that specified on the JMF.
s. A detailed procedure outlining when production will be halted due to QC or Acceptance testing results.
t. A plan to address the change in PGAB source or supplier and the potential co-mingling of differing PGAB's.
u. A procedure to take immediate possession of acceptance samples once released by MaineDOT and deliver said samples to the designated acceptance laboratory.
v. Provisions for how the QCP will be communicated to the Contractor's field personnel

The QCP shall include the following technicians together with following minimum requirements:

a. QCP Administrator - A qualified individual shall administer the QCP. The QCP Administrator must be a full-time employee of or a consultant engaged by the Contractor or paving subcontractor. The QCP Administrator shall have full authority to institute any and all actions necessary for the successful operation of the QCP. The QCP Administrator (or its designee in the QCP Administrator's absence) shall be available to communicate with the Department at all times. The QCP Administrator shall be certified as a Quality Assurance Technologist certified by the New England Transportation Technician Certification Program (NETTCP).

b. Process Control Technician(s) (PCT) shall utilize test results and other quality control practices to assure the quality of aggregates and other mix components and control proportioning to meet the JMF(s). The PCT shall inspect all equipment used in mixing to assure it is operating properly and that mixing conforms to the mix design(s) and other Contract requirements. The QCP shall detail how these duties and responsibilities are to be accomplished and documented, and whether more than one PCT is required. The Plan shall include the criteria to be utilized by the PCT to correct or reject unsatisfactory materials. The PCT shall be certified as a Plant Technician by the NETTCP.

c. Quality Control Technician(s) (QCT) shall perform and utilize quality control tests at the job site to assure that delivered materials meet the requirements of the JMF(s). The QCT shall inspect all equipment utilized in transporting, laydown, and compacting to assure it is operating properly and that all laydown and compaction conform to the Contract requirements. The QCP shall detail how these duties and responsibilities are to be accomplished and documented, and whether more than one QCT is required. The QCP shall include the criteria utilized by the QCT to correct or reject unsatisfactory materials. The QCT shall be certified as a Paving Inspector by the NETTCP.

The QCP shall detail the coordination of the activities of the Plan Administrator, the PCT and the QCT. The Project Superintendent shall be named in the QCP, and the responsibilities for successful implementation of the QCP shall be outlined.

The Contractor shall sample, test, and evaluate Hot Mix Asphalt Pavement in accordance with the following minimum frequencies:

TABLE 2 : MINIMUM QUALITY CONTROL FREQUENCIES

Test or Action	Frequency	Test Method
Temperature of mix	6 per day at street and plant	-
Temperature of mat	4 per day	-
%TMD (Surface)	1 per 125 Mg [125 ton] (As noted in QC Plan)	ASTM D2950
%TMD (Base)	1 per 250 Mg [250 ton] (As noted in QC Plan)	AASHTO T269
Fines / Effective Binder	1 per 500 Mg [500 ton]	AASHTO T 312*
Gradation	1 per 500 Mg [500 ton]	AASHTO T30
PGAB content	1 per 500 Mg [500 ton]	AASHTO T164 or T308
Voids at N_{design}	1 per 500 Mg [500 ton]	AASHTO T 312*
Voids in Mineral Aggregate at N_{design}	1 per 500 Mg [500 ton]	AASHTO T 312*
Rice Specific Gravity	1 per 500 Mg [500 ton]	AASHTO T209
Coarse Aggregate Angularity	1 per 5000 Mg [5000 ton]	ASTM D5821
Flat and Elongated Particles	1 Per 5000 Mg [5000 ton]	ASTM D4791
Fine Aggregate Angularity	1 Per 5000 Mg [5000 ton]	AASHTO T304

*Method A and B only

The Contractor may utilize innovative equipment or techniques not addressed by the Contract documents to produce or monitor the production of the mix, subject to approval by the Department.

The Contractor shall submit all Hot Mix Asphalt Pavement plant test reports, inspection reports and updated pay factors in writing, signed by the appropriate technician and present them to the Department by 1:00 P.M. on the next working day, except when otherwise noted in the QCP due to local restrictions. The Contractor shall also

retain splits of the previous 5 QC tests, with QC results enclosed for random selection and testing by The Department during QA inspections of the HMA production facility. Test results of splits that do not meet the Dispute Resolution Variance Limits in Table 10 shall trigger an investigation by the MDOT Independent Assurance Unit, and may result in that lab losing NETTCP certification and the ability to request a dispute [Section 401.223 - Process for Dispute Resolution (Methods A , B and C only)].

The Contractor shall make density test results, including randomly sampled densities, available to the Department onsite. Summaries of each day's results, including a daily paving report, shall be recorded and signed by the QCT and presented to the Department by 1:00 p.m. the next working day.

The Contractor shall have a testing lab at the plant site, equipped with all testing equipment necessary to complete the tests in Table 2. The Contractor shall locate an approved Gyratory Compactor at the plant testing lab or within 30 minutes of the plant site.

The Contractor shall fill all holes in the pavement resulting from cutting cores by the Contractor or the Department with a properly compacted, acceptable mixture no later than the following working day. Before filling, the Contractor shall carefully clean the holes and apply a coating of emulsified asphalt. On surface courses, cores shall not be cut except for Verification of the Nuclear Density Gauge, at a rate not to exceed 3 per day or 2 per 1000 Mg [1000 ton] placed.
The Contractor shall monitor plant production using running average of three control charts as specified in Section 106 - Quality. Control limits shall be as noted in Table 3 below. The UCL and LCL, shall not exceed the allowable gradation control points for the particular type of mixture as outlined in Table 1 of section 703.09

TABLE 3: Control Limits

Property	UCL and LCL
Passing 4.75 mm and larger sieves	Target +/-4.0
Passing 2.36 mm sieve	Target +/-2.5
Passing .075 mm sieve	Target +/-1.2
PGAB Content*	Target +/-0.3
Voids in the Mineral Aggregate	LCL = LSL + 0.2
% Voids at N_{design}	JMF Target +/-1.3

*Based on AASHTO T 308

The Contractor shall cease paving operations whenever one of the following occurs on a lot in progress:

a. Method A: The Pay Factor for VMA, Voids @ N_d, Percent PGAB, composite gradation, VFB, fines to effective binder or density using all Acceptance or all Quality Control tests for the current lot is less than 0.85.
b. Method B: The Pay Factor for VMA, Voids @ N_d, Percent PGAB, composite gradation, VFB, fines to effective binder or density using all Acceptance or all Quality Control tests for the current lot is less than 0.90.
c. Method C: The Pay Factor for VMA, Voids @ $N_{d,}$ Percent PGAB, percent passing the nominal maximum sieve, percent passing 2.36 mm sieve, percent passing 0.300 mm sieve, percent passing 0.075 mm sieve or density using all Acceptance or all available Quality Control tests for the current lot is less than 0.85.
d. The Coarse Aggregate Angularity or Fine Aggregate Angularity value falls below the requirements of Table 3: Aggregate Consensus Properties Criteria in Section 703.07 for the design traffic level.
e. Each of the first 2 control tests for a Method A or B lot fall outside the upper or lower limits for VMA, Voids @ Nd, or Percent PGAB; or under Method C, each of the first 2 control tests for the lot fall

outside the upper or lower limits for the nominal maximum, 2.36 mm, 0.300 mm or 0.075 mm sieves, or percent PGAB.

f. The Flat and Elongated Particles value exceeds 10% by ASTM D4791.
g. There is any visible damage to the aggregate due to over-densification other than on variable depth shim courses.
h. The Contractor fails to follow the approved QCP.

The Contractor shall notify the Resident in writing as to the reason for shutdown, as well as the proposed corrective action, by the end of the work day. Failure to do so will be treated as a second incident under 106.4.6 QCP Non-compliance. The Department will consider corrective action acceptable if the pay factor for the failing property increases, based on samples already in transit, or a verification sample is tested and the property falls within the specification limits.

In cases where the corrective action can be accomplished immediately, such as batch weight or cold feed changes, the Contractor may elect to resume production once the corrective action is completed. Additional QC testing shall be performed to verify the effectiveness of the corrective action. Subsequent occurrences of shutdown for the same property in a Lot in progress will require paving operations to cease. Paving operations shall not resume until the Contactor and the Department determines that material meeting the Contract requirements will be produced. The Department may allow the Contractor to resume production based upon a passing QC sample, with a split of the sample being sent to the Department for verification testing. If the submitted verification sample test results fall outside the specification limits, the Contractor shall cease production until a verification sample is submitted to the Department has been tested by the Department and found to be within specification limits.
If the Contractor's control chart shows the process to be out of control (defined as a single point outside of the control limits on the running average of three chart) on any property listed in Table 3: Control Limits, the Contractor shall notify the Resident in writing of any proposed corrective action by 1:00 PM the next working day.

The Department retains the exclusive right, with the exception of the first day's production of a new JMF, to determine whether the resumption of production involves a significant change to the production process. If the Department so determines, then the current lot will be terminated, a pay factor established, and a new lot will begin.

<u>401.19 Quality Control Method D</u> For Items covered under Method D, the Contractor shall submit a modified QC Plan detailing, how the mix is to be placed, what equipment is to be used, and what HMA plant is to be used. All mix designs (JMF) shall be approved and verified by MDOT prior to use. Certified QC personnel shall not be required. The Contractor shall certify the mix and the test results for each item by a Certificate of Compliance.

<u>401.20 Acceptance Method A, B & C</u> These methods utilizes Quality Level Analysis and pay factor specifications.
For Hot Mix Asphalt Pavement designated for acceptance under Quality Assurance provisions, the Department will sample once per sublot on a statistically random basis, test, and evaluate in accordance with the following Acceptance Criteria:

TABLE 4: ACCEPTANCE CRITERIA

PROPERTIES	POINT OF SAMPLING	TEST METHOD
Gradation	Paver Hopper	AASHTO T30
PGAB Content	Paver Hopper	AASHTO T308
%TMD (Surface)	Mat behind all Rollers	AASHTO T269
%TMD (Base or Binder)	Mat behind all Rollers	AASHTO T269
Air Voids at N_d	Paver Hopper	AASHTO T 312
%VMA at N_d	Paver Hopper	AASHTO T 312
Fines to Effective Binder	Paver Hopper	AASHTO T 312
%VFB	Paver Hopper	AASHTO T 312

In the event the Department terminates a Lot prematurely but fails to obtain the required number of acceptance samples to calculate the volumetric property pay factor under the test method specified in the contract, the pay factor shall be calculated using the number of samples actually obtained from the contract. Should the number of acceptance samples taken total less than three, the resulting pay factor shall be 1.0 for volumetric properties. A minimum of three cores will be used for a density pay factor, if applicable, for quantities placed to date.

Should the Contractor request a termination of the Lot in progress prior to three acceptance samples being obtained, and the Department agrees to terminate the Lot, then the pay factor for mixture properties shall be 0.80. A minimum of three cores will be used to determine a density pay factor, if applicable, for quantities placed to date.

Lot Size For purposes of evaluating all acceptance test properties, a lot shall consist of the total quantity represented by each item listed under the lot size heading.

Sublot size - Refer to section 401.201, 401.202, and 401.203 for minimum size and number of sublots. The quantity represented by each sample will constitute a sublot.

If there is less than one-half of a sublot remaining at the end, then it shall be combined with the previous sublot. If there is more than one-half sublot remaining at the end, then it shall constitute the last sublot and shall be represented by test results. If it becomes apparent partway through a Lot that, due to an underrun, there will be insufficient mix quantity to obtain the minimum number of sublots needed, the Resident may adjust the size of the remaining sublots and select new sample locations based on the estimated quantity of material remaining in the Lot.

Acceptance Testing The Department will obtain samples of Hot Mix Asphalt Pavement in conformance with AASHTO T168 Sampling Bituminous Paving Mixtures, and the Maine DOT Policies and Procedures for HMA Sampling and Testing, which will then be transported by the Contractor to the designated MDOT Laboratory within 48 hours (except when otherwise noted in the project specific QCP due to local restrictions), as directed by MDOT in approved transport containers to be provided by the Department, unless otherwise directed by the Resident. Failure to deliver an acceptance sample to the designated acceptance laboratory will be considered the second incident under 106.4.6–QCP Non-Compliance.

The Department will take the sample randomly within each sublot. Target values shall be as specified in the JMF. The Department will use Table 5 for calculating pay factors for gradation, PGAB Content, Air Voids at N_{design}, VMA, Fines to Effective Binder and VFB. The Department will withhold reporting of the test results for the Acceptance sample until 7:00 AM, on the second working day of receipt of the sample, or after receipt of the Contractors results of the Acceptance sample split. Upon conclusion of each lot, where there is a minimum of four sublots, results shall be examined for statistical outliers, as stated in Section 106.7.2 - Statistical Outliers.

Isolated Areas During the course of inspection, should it appear that there is an isolated area that is not representative of the lot based on a lack of observed compactive effort, excessive segregation or any other questionable practice, that area may be isolated and tested separately. An area so isolated that has a calculated pay factor below 0.80, based on three random tests shall be removed and replaced at the expense of the Contractor for the full lane width and a length not to be less than 50 m [150 ft].

Pavement Density The Department will measure pavement density using core samples tested according to AASHTO T-166. The Department will randomly determine core locations. The Contractor shall cut 6 inch diameter cores at no additional cost to the Department by the end of the working day following the day the pavement is placed, and immediately give them to the Department. Cores for Acceptance testing shall be cut such that the nearest edge is never within 0.225 m (9 inches) of any joint. The cores will be placed in a transport container provided by the Department and transported by the Contractor to the designated MDOT Lab as directed by the Department. Pre-testing of the cores will not be allowed. At the time of sampling, the Contractor and the Department shall mutually determine if a core is damaged. If it is determined that the core(s) is damaged, the Contractor shall cut new core(s) at the same offset and within 1 m [3 ft] of the initial sample. At the time the core is cut, the Contractor and the Department will mutually determine if saw cutting of the core is needed, and will mark the core at the point where sawing is needed. The core may be saw cut by the Contractor in the Department's presence onsite, or in an MDOT Lab by The Department, without disturbing the layer being tested to remove lower layers of Hot Mix Asphalt Pavement, gravel, or RAP. No recuts are allowed at a test location after the core has been tested. Upon conclusion of each lot, density results shall be examined for statistical outliers as stated in Section 106.7.2.

On all sections of overlay with wearing courses designed to be 19 mm [3/4 in] or less in thickness, there shall be no pay adjustment for density otherwise noted in Section 403 - Hot Bituminous Pavement. For overlays designed to be 19 mm [3/4 in] or less in thickness, density shall be obtained by the same rolling train and methods as used on mainline travelway surface courses with a pay adjustments for density, unless otherwise directed by the Department.

There shall be no pay adjustment for density on shoulders unless otherwise noted in Section 403 - Hot Bituminous Pavement. Density for shoulders shall be obtained by the same rolling train and methods as used on mainline travelway, unless otherwise directed by the Department. Efforts to obtain optimum compaction will not be waived by the Department unless it is apparent during construction that local conditions make densification to this point detrimental to the finished pavement surface course.

401.201 Method A Lot Size will be the entire production per JMF for the project, or if so agreed at the Pre-paving Conference, equal lots of up to 4500 Mg [4500 tons], with unanticipated over-runs of up to 1500 Mg [1500 ton] rolled into the last lot. Sublot sizes shall be 750 Mg [750 ton] for mixture properties, 500 Mg [500 ton] for base or binder densities and 250 Mg [250 ton] for surface densities. The minimum number of sublots for mixture properties shall be 4, and the minimum number of sublots for density shall be five.

TABLE 5: METHOD A ACCEPTANCE LIMITS

Property	USL and LSL
Passing 4.75 mm and larger sieves	Target +/-7%
Passing 2.36 mm to 1.18 mm sieves	Target +/-4%
Passing 0.60 mm	Target +/-3%
Passing 0.30 mm to 0.075 mm sieve	Target +/-2%
PGAB Content	Target +/-0.4%
Air Voids	4.0% +/-1.5%
Fines to Effective Binder	0.9 +/-0.3
Voids in the Mineral Aggregate	LSL Only from Table 1
Voids Filled with Binder	Table 1 values plus a 4% production tolerance for USL only
% TMD (In place density)	95.0% +/- 2.5%

401.202 Method B Lot Size will be the entire production per JMF for the project and shall be divided into 3 equal sublots for Mixture Properties and 3 equal sublots for density.

TABLE 6: METHOD B ACCEPTANCE LIMITS

Property	USL and LSL
Percent Passing 4.75 mm and larger sieves	Target +/-7
Percent Passing 2.36 mm to 1.18 mm sieves	Target +/-5
Percent Passing 0.60 mm	Target +/-4
Percent Passing 0.30 mm to 0.075 mm sieve	Target +/-3
PGAB Content	Target +/-0.5
Air Voids	4.0% +/-2.0
Fines to Effective Binder	0.9 +/-0.3
Voids in the Mineral Aggregate	LSL from Table 1
Voids Filled with Binder	Table1 plus a 4% production tolerance for USL.
% TMD (In-place Density)	95.0% +/- 2.5%

401.203 Testing Method C Lot Size will be the entire production per JMF for the project, or if so agreed at the Pre-paving Conference, equal lots of up to 4500 Mg [4500 tons], with unanticipated over-runs of up to 1500 Mg [1500 ton] rolled into the last lot. Sublot sizes shall be 750 Mg [750 ton] for mixture properties, 500 Mg [500 ton] for base or binder densities and 250 Mg [250 ton] for surface densities. The minimum number of sublots for mixture properties shall be 4, and the minimum number of sublots for density shall be five.

TABLE 7: METHOD C ACCEPTANCE LIMITS

Property	USL and LSL
Passing 4.75 mm and larger sieves	Target +/-7%
Passing 2.36 mm to 1.18 mm sieves	Target +/-5%
Passing 0.60 mm	Target +/-4%
Passing 0.30 mm to 0.075 mm sieve	Target +/-2%
PGAB Content	Target +/-0.4%
Air Voids	4.0% +/-1.5%
Fines to Effective Binder	0.9 +/-0.3
Voids in the Mineral Aggregate	LSL Only from Table 1
Voids Filled with Binder	Table 1 values plus a 4% production tolerance for USL only
% TMD (In place density)	95.0% +/- 2.5%

401.204 Testing Method D For hot mix asphalt items designated as Method D in Section 403 - Hot Bituminous Pavement, one sample will be taken from the paver hopper or the truck body per 250 Mg [250 ton] per pay item. The mix will be tested for gradation and PGAB content. Disputes will not be allowed. If the mix is within the tolerances listed in Table 8: Method D Acceptance Limits, the Department will pay the contract unit price. Contractor shall cut two 150 mm [6 in] cores, which shall be tested for percent TMD per AASHTO T-269 unless otherwise noted in Section 403 - Hot Bituminous Pavement. If the average for the two tests falls below 92.5% the disincentive shall apply. If the test results for each 250 Mg [250 ton] increment are outside these limits, the following deductions (Table 8b) shall apply to the HMA quantity represented by the test.

TABLE 8: METHOD D ACCEPTANCE LIMITS

Property	USL and LSL
Percent Passing 4.75 mm and larger sieves	Target +/-7
Percent Passing 2.36 mm to 1.18 mm sieves	Target +/-5
Percent Passing 0.60 mm	Target +/-4
Percent Passing 0.30 mm to 0.075 mm sieve	Target +/-3
PGAB Content	Target +/-0.5
% TMD (In-place Density)	95.0% +/- 2.5%

TABLE 8b Method “D” Price Adjustments

PGAB Content	-5%
2.36 mm sieve	-2%
0.30 mm sieve	-1%
0.075 mm sieve	-2%
Density	-10%

401.21 Method of Measurement The Department will measure Hot Mix Asphalt Pavement by the Mg [ton] in accordance with Section 108.1 - Measurement of Quantities for Payment.

401.22 Basis of Payment The Department will pay for the work, in place and accepted, in accordance with the applicable sections of this Section, for each type of HMA specified.

The Department will pay for the work specified in Section 401.11, for the HMA used, except that cleaning objectionable material from the pavement and furnishing and applying bituminous material to joints and contact surfaces is incidental.

Payment for this work under the appropriate pay items shall be full compensation for all labor, equipment, materials, and incidentals necessary to meet all related contract requirements, including design of the JMF, implementation of the QCP, obtaining core samples, transporting cores and samples, filling core holes, applying emulsified asphalt to joints, and providing testing facilities and equipment.
The Department will make a pay adjustment for quality as specified below.

401.221 Pay Adjustment The Department will sample, test, and evaluate Hot Mix Asphalt Pavement in accordance with Section 106 - Quality and Section 401.20 - Acceptance, of this Specification.

401.222 Pay Factor (PF) The Department will use the following criteria for pay adjustment using the pay adjustment factors under Section 106.7 - Quality Level Analysis:

Density If the pay factor for Density falls below 0.80 for Method A or C or 0.86 for Method B, all of the cores will be randomly re-cut by Sublot. A new pay factor will be calculated that combines all initial and retest results. If the resulting pay factor is below 0.80 for Method A or C or below 0.86 for Method B, the entire Lot shall be removed and replaced with material meeting the specifications at no additional cost to the Department, except that the Department may, when it appears that there is a distinct pattern of defective material, isolate any defective material by investigating each mix sample sublot and require removal of defective mix sample sublots only, leaving any acceptable material in place if it is found to be free of defective material. Pay factors equal to or greater than the reject level will be paid accordingly.

Gradation For HMA evaluated under Acceptance Method A or B, the Department will determine a composite pay factor (CPF) using applicable price adjustment factors “f“ from Table 9: Table of Gradation Composite “f” Factors, and Acceptance limits from Table 5: Method A Acceptance Limits, for Method A or Table 6: Method B Acceptance Limits, for Method B. The Department will not make price adjustments for gradation on Methods A and B, but will monitor them as shutdown criteria.

TABLE 9: TABLE OF GRADATION COMPOSITE " f " FACTORS (Methods A and B)

Constituent		"f" Factor			
		19 mm	12.5 mm	9.5 mm	4.75 mm
Gradation	25 mm	-	-	-	-
	19 mm	4	-	-	-
	12.5 mm		4	4	-
	9.50 mm				4
	2.36 mm	6	6	6	8
	1.18 mm				
	0.60 mm	2	2	2	2
	0.30 mm	2	2	2	2
	0.075 mm	6	6	6	8

For HMA evaluated under Acceptance Method C, the Department will determine a pay factor using acceptance limits from Table **7**: Method C Acceptance Limits.

VMA, Air Voids, VFB and Fines to Effective Binder The Department will determine a pay factor (PF) using the applicable Acceptance Limits.

The following variables will be used for pay adjustment:

PA = Pay Adjustment
Q = Quantity represented by PF in Mg [ton]
P = Contract price per Mg [ton]
PF = Pay Factor

Pay Adjustment Method A

The Department will use the following criteria for pay adjustment: density, Performance Graded Asphalt Binder content, voids @N_d, VMA, VFB, F/B_{eff}, and the screen sizes listed in Table 9 for the type of HMA represented in the JMF. If any single pay factor for PGAB Content, VMA, or Air Voids falls below 0.80, then the composite pay factor for PGAB Content, VMA, and Air Voids shall be 0.55.

Density: For mixes having a density requirement, the Department will determine a pay factor using Table 5: Method A Acceptance Limits:

PA = (density PF- 1.0)(Q)(P)x0.50

PGAB Content, VMA and Air Voids: The Department will determine a pay adjustment using Table 5: Method A Acceptance Limits as follows:

PA = (voids @ N_d PF- 1.0)(Q)(P)x0.20 + (VMA @ N_d PF- 1.0)(Q)(P)x0.20 + (PGAB PF- 1.0)(Q)(P)x0.10

VFB and Fines to Effective Binder The Department will determine a pay factor (PF) using Table 5: Method A Acceptance Limits. The Department will not make price adjustments for VFB or Fines to Effective Binder, but will monitor them as shutdown criteria.

Pay Adjustment Method B

The Department will use the following criteria for pay adjustment: density, Performance Graded Asphalt Binder content, voids @N_d, VMA, VFB, F/B_{eff}, and the screen sizes listed in Table 9 for the type of HMA represented in the JMF. If any single pay factor for PGAB Content, VMA, or Air Voids falls below 0.86, then the composite pay factor for PGAB Content, VMA, and Air Voids shall be 0.70.

Density: For mixes having a density requirement, the Department will determine a pay factor using Table 6: Method B Acceptance Limits:

PA = (density PF- 1.0)(Q)(P)x0.50

PGAB Content, VMA and Air Voids: The Department will determine a pay adjustment using Table 6: Method B Acceptance Limits as follows:

PA = (voids @ N_d PF- 1.0)(Q)(P)x0.20 + (VMA @ N_d PF- 1.0)(Q)(P)x0.20 + (PGAB PF- 1.0)(Q)(P)x0.10

VFB and Fines to Effective Binder The Department will determine a pay factor (PF) using Table 6: Method B Acceptance Limits. The Department will not make price adjustments for VFB or Fines to Effective Binder, but will monitor them as shutdown criteria.

Pay Adjustment Method C

The Department will use density, Performance Graded Asphalt Binder content, and the percent passing the nominal maximum, 2.36 mm, 0.300 mm and 0.075 mm sieves for the type of HMA represented in the JMF. If the PGAB content falls below 0.80, then the PGAB pay factor shall be 0.55.

Density: For mixes having a density requirement, the Department will determine a pay factor using Table 7: Method C Acceptance Limits:

PA = (density PF- 1.0)(Q)(P)x0.50

PGAB Content and Gradation The Department will determine a pay factor using Table **7**: Method C Acceptance Limits. The Department will calculate the price adjustment for Mixture Properties as follows:

PA = (% Passing Nom. Max PF-1.0)(Q)(P)X0.05+(% passing 2.36 mm PF-1.0)(Q)(P)X0.05+(%passing 0.30 mm PF-1.0)(Q)(P)X0.05+(%passing 0.075 mm PF-1.0)(Q)(P)X0.10+(PGAB PF-1.0)(Q)(P)X0.25

VMA, Air Voids, VFB and Fines to Effective Binder The Department will determine a pay factor (PF) using Table 7: Method C Acceptance Limits. The Department will not make price adjustments for VMA, Air Voids, VFB or Fines to Effective Binder, but will monitor them as shutdown criteria.

Pay Adjustment Method D

The Department will use density, Performance Graded Asphalt Binder content, and the screen sizes listed in Table 8b for the type of HMA represented in the JMF. If test results do not meet the Table 8 requirements, deducts as shown in Table 8b shall be applied to the quantity of mix represented by the test.

401.223 Process for Dispute Resolution (Methods A B & C only)

a. Dispute Resolution sampling At the time of Hot-Mix Asphalt sampling, the Department will obtain a split sample of each Acceptance test random sample for possible dispute resolution testing. The Contractor shall also obtain a split sample of the HMA at this same time. If the Contractor wishes to retain the option of requesting dispute testing of the initial Acceptance sample, the Contractor will test their split of the

Acceptance sample and shall report their results to the Resident, with a copy to the QA Engineer at the Central Laboratory in Bangor by 7:00 AM, on the second working day from time of QA sampling, otherwise dispute resolution will not be initiated. The Department's dispute resolution split sample will be properly labeled and stored for a period of at least two weeks, or until the sample is tested.

b. Disputing Acceptance results The Contractor may dispute the Department's Acceptance results and request (Methods A, B, & C) that the dispute resolution split sample be tested by notifying the Department's Resident and the QA Engineer at the Central Laboratory in Bangor in writing within two

working days after receiving the results of the Acceptance test. The following shall be provided in the request:

- Acceptance sample reference number
- The specific test result(s) or property(ies) being disputed, and
- The complete, signed report of the Contractor's testing (In a lab certified by the NETTCP and MDOT) of their split of the Acceptance sample indicating that the variances in Table10: Dispute Resolution Variance Limits, for the specific test result(s) or property(ies) were exceeded.

c. Disputable items The Contractor may dispute any or all of the following Method A or B test results when the difference between the Department's value and the Contractor's value for that test equals or exceeds the corresponding allowable variation in Table 10: Dispute Resolution Variance Limits, PGAB content, G_{mb}, and G_{mm}. In addition, if the allowable variation for these tests is not met or exceeded, the Contractor may dispute either or both of the following material properties provided the difference between results for them equals or exceeds the corresponding allowable variation in Table 10: Voids at N_{design}, and VMA.
For Method C only: The results for PGAB content and the screen sizes used for pay adjustment may be disputed.

d. Outcome The value of any disputed result or property reported for the initial Acceptance sample shall stand if the value reported for the dispute resolution sample is not closer to the value the Contractor reported for their split sample than to the value reported for the initial Acceptance sample. If the value reported for the dispute resolution falls precisely half-way between the other two values the value reported for the dispute resolution will replace the original acceptance value. Otherwise, the value reported for the dispute resolution sample will replace the value reported for the initial Acceptance sample, and will be used to re-calculate any other affected results or properties.

TABLE 10: DISPUTE RESOLUTION VARIANCE LIMITS

PGAB Content	+/-0.4%
G_{mb}	+/-0.030
G_{mm}	+/-0.020
Voids @ N_d	+/-0.8%
VMA	+/-0.8%
Passing 4.75 mm and larger sieves	+/- 4.0%
Passing 2.36 mm to 0.60 mm sieves	+/- 3.0%
Passing 0.30 mm to 0.15	+/- 2.0 %
0.075 mm sieve	+/- 1.0%

SECTION 402 - PAVEMENT SMOOTHNESS

402.00 Smoothness Projects Projects to have their pavement smoothness analyzed in accordance with this Specification will be so noted in Special Provision 403 - Bituminous Box

402.01 Pavement Smoothness The final pavement surface shall be evaluated for smoothness using a Class I or Class II profiler as defined by ASTM E950 (94). Smoothness measurements will be expressed in terms of the International Roughness Index (IRI) as defined by the World Bank, in units of inches/mile.

402.02 Lot Size Lot size for smoothness will be 1000 lane-meters [3000 lane-feet]. A sublot will consist of 20 lane-meters [50 lane-feet]. Partial lots will be included in the previous lot if less than one-half the size of a normal lot. If equal to or greater than one-half the normal lot size, it will be tested as a separate lot.

402.03 Acceptance Testing The Department will conduct Acceptance testing following completion of the surface course. Sections to be excluded from testing include the following:

Bridge decks and joints (no smoothness measurements will be taken within 30 m [100 ft] of bridge joints)
Acceleration and deceleration lanes
Shoulders and ramps
Side streets and roads
Within 30 m [100 ft] of transverse joints at the beginning and end of the project
Within 30 m [100 ft] of railroad crossings
Urban areas with speed limits of 50 kph [30 mph] or lower

Each lot shall have 2 measurements made in each wheel path. The average of the 4 measurements will determine the smoothness for that lot.

The smoothness measurements will be statistically evaluated for pay factors as described in Subsection 106.7 - Quality Level Analysis, using the specification limits shown below.

ACCEPTANCE LIMITS

Level	USL
I	0.95 m/km [60 in/mile]
II	1.10 m/km [70 in/mile]
III	1.25 m/km [80 in/mile]

Computation of Smoothness Pay Adjustment:

PA = (PF-1.0)(Q)(P)
where:
Q = Quantity of surface course in the Lot (excluding shoulders, side streets, bridge decks, ramps, acceleration and deceleration lanes)
PF = smoothness pay factor for the Lot
P = Contract unit price for surface pavement
PA = pay adjustment

402.04 Unacceptable Work In the event that any Lot is found to have a pay factor less than 0.80, the Contractor shall take whatever remedial action is required to correct the pavement surface in that Lot at no additional expense to the Department. Such remedial action may include but is not limited to removal and replacement of the unacceptable pavement. In the event remedial action is necessary, the Contractor shall submit a written plan to the Resident outlining the scope of the remedial work. The Resident must approve this plan before the remedial work can begin. Following remedial work, the Lot shall be retested, and will be subject to the specification limits listed above. The resulting pay factor, if within the acceptable range, will be used in the final pay adjustment. The Contractor shall pay the cost of retesting the pavement following corrective action.

Localized surface tolerance defects will be subject to the provisions outlined in Section 401.101 Surface Tolerances.

Payment will be made under:

Pay Item	Pay Unit
402.10 Incentive/Disincentive - Pavement Smoothness	Lump Sum

SECTION 403 - HOT BITUMINOUS PAVEMENT

403.01 Description This work shall consist of constructing one or more courses of bituminous pavement on an approved base in accordance with these specifications, and in reasonably close conformity with the lines, grades, thickness and typical cross sections shown on the plans or established.

The bituminous pavement shall be composed of a mixture of aggregate, filler if required, and bituminous material.

403.02 General The materials and their use shall conform to the requirements of Section 401 - Hot Mix Asphalt Pavement.

403.03 Construction The construction requirements shall be as specified in Section 401 - Hot Mix Asphalt Pavement.
In addition, hot bituminous pavement placed on bridges shall also conform to the following requirements.

a. The mixture shall be composed of aggregate, PGAB and mineral filler but no recycled asphalt pavement and placed in courses as specified in the Special Provisions.

b. The bottom course shall be placed with an approved rubber mounted bituminous paver of such type and operated in such a manner that the membrane waterproofing will not be damaged in any way.

c. The top course shall not be placed until the bottom course has cooled sufficiently to provide stability.

d. The Contractor will not be required to cut sample cores from the compacted pavement on the bridge deck.

e. After the top course has been placed, the shoulder areas shall be sealed 1 meter [3 ft] wide with two applications of an emulsified bituminous sealer meeting the requirements of Section 702.12 - Emulsified Bituminous Sealing Compound. The first application shall be pre-mixed with fine, sharp sand, similar to mortar sand, as needed to fill all voids in the mix in the area being sealed. The second application may be applied without sand. The sealer shall be carried to the curb at the gutter line in sufficient quantity to leave a bead or fillet of material at the face of the curb. The area to be sealed shall be clean, dry and the surface shall be at ambient temperature.

f. The furnishing and applying of the required quantity of sealer for the bridge shoulder areas shall be incidental to placing the hot bituminous pavement.

g. The atmospheric temperature for all courses on bridge decks shall be 10°C [50°F] or higher.

h. The use of an oscillating steel roller shall be required to compact all mixtures pavements placed on bridge decks.

403.04 Method of Measurement Hot bituminous pavement will be measured as specified in Section 401.21-Method of Measurement.

403.05 Basis of Payment The accepted quantities of hot bituminous pavement will be paid for at the contract unit price per Megagram [ton] for the bituminous mixtures, including bituminous material complete in place.

Method A, Method B, Method C and Method D shall be used for acceptance as specified in Section 401 - Hot Mix Asphalt Pavements. (See Complementary Notes, Section 403 - Hot Bituminous Pavement, for Method location).

Payment will be made under:

Pay Item		Pay Unit
403.102	Hot Mix Asphalt Pavement for Special Areas	MG [Ton]
403.206	Hot Mix Asphalt, 25 mm Nominal Maximum Size	MG [Ton]
403.207	Hot Mix Asphalt, 19.0 mm Nominal Maximum Size	MG [Ton]
403.2071	Hot Mix Asphalt , 19.0 mm Nominal Maximum Size	MG [Ton]
403.2072	Asphalt Rich Hot Mix Asphalt,19.0 mm Nominal Maximum Size (Asphalt Rich Base and Intermediate course)	MG [Ton]
403.208	Hot Mix Asphalt, 12.5 mm Nominal Maximum Size	MG [Ton]
403.2081	Hot Mix Asphalt - 12.5 mm Nominal Maximum Size (PG 70-28)	MG [Ton]
403.209	Hot Mix Asphalt, 9.5 mm Nominal Maximum Size (sidewalks, drives, islands & incidentals)	MG [Ton]
403.210	Hot Mix Asphalt, 9.5 mm Nominal Maximum Size	MG [Ton]
403.2101	Hot Mix Asphalt - 9.5 mm Nominal Maximum Size (PG 70-28)	MG [Ton]
403.2102	Asphalt Rich Hot Mix Asphalt, 9.5 mm Nominal Maximum Size (Asphalt Rich Intermediate course)	MG [Ton]
403.211	Hot Mix Asphalt (shimming)	MG [Ton]
403.212	Hot Mix Asphalt, 4.75 mm Nominal Maximum Size	MG [Ton]
403.2131	Hot Mix Asphalt, 12.5 mm Nominal Maximum Size, (PG 70-28) (Base and Intermediate Base course)	MG [Ton]
403.2132	Asphalt Rich Hot Mix Asphalt, 12.5 mm Nominal Maximum Size (Base and Intermediate Base course)	MG [Ton]

SPECIAL PROVISION
SECTION 703
AGGREGATES

The Standard Specifications, Revision of 2002 Section 700 - Materials, Subsection 703.09 HMA Mixture Composition has been revised as follows:

703.09 HMA Mixture Composition The coarse and fine aggregate shall meet the requirements of Section 703.07. The several aggregate fractions for mixtures shall be sized, graded, and combined in such proportions that the resulting composite blends will meet the grading requirements of the following tables or as otherwise specified.

TABLE 1: COMPOSITION OF MIXTURES - CONTROL POINTS

SIEVE SIZE	GRADING			
	TYPE 19 mm	TYPE 12.5 mm	TYPE 9.5 mm	TYPE 4.75 mm
	PERCENT BY WEIGHT PASSING - COMBINED AGGREGATE			
37.5 mm				
25 mm	100			
19 mm	90-100	100		
12.5 mm	-90	90-100	100	100
9.5 mm	-	-90	90-100	95-100
4.75 mm	-	-	-90	80-100
2.36 mm	23-49	28-58	32-67	40 - 80
1.18 mm	-	-	-	-
600 µm	-	-	-	-
300 µm	-	-	-	-
75 µm	**2.0-7.0**	**2.0-7.0**	**2.0-7.0**	**2.0-7.0**

SIEVE SIZE	RESTRICTED ZONES			
	TYPE 19 mm [¾ in]	TYPE 12.5 mm [½ in]	*TYPE 9.5 mm [⅜ in]	TYPE 4.75 mm [#40]
	PERCENT BY WEIGHT PASSING - COMBINED AGGREGATE			
37.5 mm [1½ in]	-	-	-	-
25 mm [1 in]	-	-	-	-
19 mm [¾ in]	-	-	-	-
12.5 mm [½ in]	-	-	-	-
9.5 mm [⅜ in]	-	-	-	-
4.75 mm [No. 4]	-	-	-	-
2.36 mm [No. 8]	34.6	39.1	47.2	-
1.18 mm [No. 16]	22.3-28.3	25.6-31.6	31.6-37.6	-
600 µm [No. 30]	16.7-20.7	19.1-23.1	23.5-27.5	-
300 µm [No. 50]	13.7	15.5	18.7	-
75 µm [No. 200]	-	-	-	-

* The restricted zone is presented for information and definition of “Fine” 9.5mm mixes only.

SPECIAL PROVISION
DIVISION 400
PAVEMENTS

SECTION 401 - HOT MIX ASPHALT PAVEMENT
(Longitudinal joint construction using wedge/taper apparatus)

The Special Provision 400. Section 401 – Hot Mix Asphalt Pavement, subsection 401.15 – Spreading and Finishing, and subsection 401.17- Joints have been modified with the following revisions. All sections not revised by this Special Provision shall be as outlined in the Special Provision 400 Pavements, Section 401 – Hot Mix Asphalt Pavement. References to Standard Specifications, Special Provisions, or other documents, shall be determined as the most current version available at the time of bid, or as amended. All costs associated with this Item will not be paid for directly, but shall be considered included in the associated contract items.

401.15 Spreading and Finishing The section has been amended as follows:

On areas where irregularities or unavoidable obstacles make the use of mechanical spreading and finishing equipment impracticable, the Contractor shall spread, rake, and lute the HMA with hand tools to provide the required compacted thickness. Solvent based agents that strip asphalts from aggregates will not be allowed as release agents.

On roadways with adjoining lanes carrying traffic, the Contractor shall place each course over the full width of the traveled way section being paved that day, unless otherwise noted by the Department in Section 403 - Hot Bituminous Pavement, or within this Special Provision.

When an approved longitudinal joint construction method is utilized, such as a manufactured notched wedge apparatus, the Department may allow the placement of mixtures in one continuous lane for each calendar day worked, with the following conditions:

The Contractor may utilize a manufactured notched wedge joint apparatus on all HMA layers 1 ½ inch or greater in Zone 1 between the dates of May 30th and the Saturday following September 1st, and in Zone 2 between the dates of May 15th and the Saturday following September 15th. When the work is to be performed, either by contract requirement or Contractor option, during conditions defined as “night work”, the same seasonal limitations shall apply unless the Department determines that the construction method is producing an unsound joint. This work will not be allowed during times of inclement weather as outlined in Division 400 – Special Provision 401; subsection 401.06 Weather and Seasonal Limitations.

If this option is utilized on roadways with two-way traffic, the Contractor will be required to place a matching course of HMA over the adjacent section of travel lane before the end of the following calendar day. Failure to match the centerline course the following day will constitute a traffic control violation unless an excusable delay is granted by the Department.

If this option is utilized on divided highways or expressways with directional traffic, the Contractor will be required to place a matching course of HMA over the adjacent section of travel lane within seven calendar days from placement of the initial paved lane. Failure to match the centerline course the within the seven calendar days will constitute a traffic control violation unless an excusable delay is granted by the Department.

The Contractor will also be responsible for installing additional warning signage that clearly defines the centerline elevation differential hazard, as well as additional centerline delineation such as double RPM application, or temporary painted line. The Traffic Control Plan shall include this option and the additional requirements. All signs and traffic control devices will conform to Section 719.01, and Section 652, and will be installed prior to the work, at a maximum spacing of 0.50 mile [0.80 km] for the entire length of the effected roadway section. On roadways with two-way traffic, the Contractor will be required to place the specified course over the full width of the mainline traveled way being paved prior to opening the sections to weekend or holiday traffic. If this option is utilized, all additional signing, labor, traffic control devices, or incidentals will not be paid for directly, but will be considered incidental to the appropriate 652 bid items.

The Department reserves the right to have centerline cores cut by the Contractor's QC personnel for informational purposes to monitor the density along the joint. Informational cores at the centerline joint will be taken centered over the tapered part of the wedge joint.

Any notched wedge joint constructed areas that become cracked or broken shall be trimmed back to the limits affected prior to placing the adjoining lane. Any materials that become unbound or separated from the wedge or tapered joint section, or contaminated by materials determined by the Department as being detrimental to the construction of a sound construction joint, shall be removed by sweeping, compressed air and lance, or by hand tools as required. This work, if necessary, will not be paid for directly, but shall be considered incidental to the related contract items.

<u>401.17 Joints</u> The following section has been amended as follows:

Should the notched wedge joint device be used, the Contractor shall apply a coating of emulsified asphalt on the vertical and tapered surface of the longitudinal centerline joint immediately before paving. The rate of application shall be approximately 0.050 G/SY. This application shall be in addition to the normal application of tack coats to the construction joint face and horizontal surfaces prior to placing a new lift. The Contractor shall use an approved spray apparatus designed for covering a narrow surface. The Department may approve application by a brush for small surfaces, or in the event of a malfunction of the spray apparatus, but for a period of not more than one working day.

SPECIAL PROVISION
SECTION 400
HOT MIX ASPHALT PAVEMENTS
(Polymer Modified PGAB for HMA)

401.05 Performance Graded Asphalt Binder This section and Special Provision 403 has been amended as follows:

The Contractor shall compose the Hot Mix Asphalt Pavement with aggregate, Performance Graded Asphalt Binder (PGAB), and mineral filler if required. Performance Graded Asphalt Binder shall be polymer modified as detailed below and shall conform to the requirements of AASHTO M 320. The required PGAB shall be a storage-stable, pre-blended, homogeneous, polymer modified asphalt binder that meets a **PG 70-28** to **PG 76-28** grading.

The RTFOT (AASHTO T 240) residue of the polymer modified PGAB shall be tested by the Contractor according to ASTM D 6084 and have a minimum elastic recovery value of 60% at a test temperature of 25 °C. The Contractor shall provide the Department with documentation and test results from the asphalt binder provider showing that the PGAB meets the requirements of this special provision. The Department may take an informational sample of the polymer modified PGAB at any time to evaluate its elastic recovery value.

Payments will be made under the appropriate mixture type used:

Pay Item		Pay Unit
403.2071	19.0 mm Polymer Mod. Hot Mix Asphalt Base	Ton
403.2081	12.5 mm Polymer Mod. Hot Mix Asphalt Surface	Ton
403.2101	9.5 mm Polymer Mod. Hot Mix Asphalt	Ton
403.2111	9.5 mm Polymer Mod. Hot Mix Asphalt Shim	Ton
403.2121	4.75 mm Polymer Mod. Hot Mix Asphalt Shim	Ton
403.2131	12.5 mm Polymer Mod. Hot Mix Asphalt Base	Ton

SPECIAL PROVISION
SECTION 403
HOT MIX ASPHALT OVERLAY

Desc. of Course	Grad Design	Item Number	Bit Cont. % of Mix	Total Thick	No. Of Layers	Comp. Notes
		3" Maine Kennebec Bridge Deck				
Wearing	9.5mm	403.2101	N/A	1 ½"	1	1,2,4,8,11
Base	9.5mm	403.2101	N/A	1 ½"	1	1,2,4,8,11
		4" Route 197				
Wearing	9.5mm	403.2101	N/A	1 ½"	1	1,4,8,11
Base	12.5mm	403.213	N/A	2 ½"	1	4,8
		4" Lincoln Road Travel Way and Shoulders Approach Areas				
Wearing	9.5mm	403.2101	N/A	1 ½"	1	1,4,8,11
Base	12.5mm	403.213	N/A	2 ½"	1	4,8
		4" Densmore Lane Travel Way & Shoulders Area				
Wearing	9.5mm	403.2101	N/A	1 ½"	1	1,4,8,11
Base	12.5mm	403.213	N/A	2 ½"	1	4,8
		4" Old Ferry Road Travel Way & Shoulders Area				
Wearing	9.5mm	403.2101	N/A	1 ½"	1	1,4,8,11
Base	12.5mm	403.213	N/A	2 ½"	1	4,8
		Drives and Incidentals				
Wearing	9.5mm	403.209	N/A	3.0"	2/more	2,3,10,14

COMPLEMENTARY NOTES

1. The required PGAB for this mixture will meet a **PG 70-28** grading. The use of Recycled Asphalt Pavement (RAP) will not be permitted in mixtures utilizing modified PGAB's.
2. The density requirements are waived. The use of an oscillating steel roller shall be required to compact all HMA pavements placed on bridge decks in addition to the normal roller train.
3. The design traffic level for mix placed shall be <0.3 million ESALS.
4. The design traffic level for mix placed shall be 0.3 to <3 million ESALS. The design, verification, Quality Control, and Acceptance tests for this mix will be performed at **75 gyrations.**

8. Section 106.6 Acceptance, (2) Method B.
10. Section 106.6 Acceptance, (2) Method D.
11. The combined aggregate gradation required for this item shall be classified as a 9.5mm **"coarse graded "** mixture, (using the Primary Control Sieve control point) as defined in 703.09.
14. A mixture meeting the requirements of section 703.09 Grading 'D', with a minimum PGAB content of 6%, and the limits of Special Provision 401, Table 9 (Drives and Sidewalks) for PGAB content and gradation may be substituted for this item. A job mix formula shall be submitted to the department for approval.

Tack Coat

A tack coat of emulsified asphalt, RS-1, Item 409.15 shall be applied to any existing pavement at a rate of approximately 0.025 gal/yd², and on milled pavement approximately 0.05 gal/yd², prior to placing a new course. A fog coat of emulsified asphalt shall be applied between shim / intermediate course and the surface course, at a rate not to exceed 0.025 gal/yd².

Tack used between layers of pavement will be paid for at the contract unit price for Item 409.15 Bituminous Tack Coat.

SPECIAL PROVISION
SECTION 501
FOUNDATION PILES
(Acoustic Monitor)

Description:

This work shall consist of the preparation and implementation of a hydro acoustic monitoring plan, in accordance with Special Provision 105 Environmental Requirements.

Acoustic Monitoring for installation of a Temporary Work Trestle shall be at no additional cost to the Department.

Method of Measurement:

This work will be measured for payment by the Calendar Day.

Basis of Payment:

Acoustic Monitor will be paid for at the contract unit Calendar Day, which shall be full compensation for all requirements specified in Special Provision 105 Environmental Requirements.

Payment will be made under:

Pay Item		Pay Unit
501.235	Acoustic Monitor	Calendar Day

SPECIAL PROVISION
SECTION 501
FOUNDATION PILES
(FRP Composite Piles)

The following is added to Section 501, Foundation Piles, of the Standard Specifications:

Description. This work shall consist of coordinating, receiving and transporting FRP pile shells, filling selected piles with concrete, furnishing equipment and personnel to drive FRP shells and concrete-filled FRP shells to bedrock, providing equipment and personnel to perform dynamic pile tests and pile integrity tests, and providing equipment and personnel to extract driven FRP composite piles and transport the extracted piles to Orono, Maine.

The Contractor shall coordinate this work with the Department, the Manufacturer of the FRP hollow piles, and the University of Maine in Orono (UMaine). The Contractor's construction schedule shall take into account the time required to perform this work, as described herein.

Materials. All materials, equipment and personnel are to be provided by the Contractor unless it is specifically stated that an item shall be provided by the University or the Department.

> FRP pile shells (hollow). The FRP piles shall be provided by the Department.
> Pile shoes. Pile shoes shall be provided by the Contractor.
> Pile-pulling rings. To be provided and installed by the Contractor.
> Class A Concrete. Concrete for filling two (2) FRP shells shall be provided by the Contractor.
> Pile Driving Equipment. To be provided by the Contractor in accordance with Section 501 of the Standard Specifications.
> Dynamic Pile Tests. To be provided by the Contractor. The dynamic tests and reporting shall meet the requirements of Section 501 of the Standard Specifications.
> Pile Integrity Tests. To be provided by the Contractor.

Construction Requirements.

Securing Piles. The Contractor shall receive, transport and store four (4) 40-foot long piles which are to be provided by a Manufacturer and shall be transported to the project site from the Manufacturer's facility in Brunswick, Maine.
Concrete Fill. The Contractor shall fill one pile shell with Class A concrete prior to driving. The Contractor shall wait a minimum of 28-days prior to driving the pile. One of three (3) hollow FRP shells driven will be cleaned-out and filled with Class A concrete after being driven.

Driving FRP Pile. The contractor shall provide equipment and personnel to drive 3 hollow and one concrete filled FRP piles to bedrock, over-land, as directed by the Resident and at a location selected by the Resident. The location shall have approximately 30 to 40 feet of overburden over bedrock. The site for driving the test piles can be an off-site location proposed by the Contractor, with the approval of the Resident.
Dynamic Pile Tests. The Contractor shall conduct dynamic piles tests on all piles during driving in accordance with Section 501 of the Standard Specifications.
Pile Integrity Tests. The Contractor shall perform pile integrity tests (PIT) tests on the two (2) concrete-filled piles in accordance with ASTM D5882-00 – Standard Test Method for Low Strain Integrity Testing.
Extracting and Transporting Piles. The Contractor shall extract the four (4) piles after driving and deliver the piles to UMaine's Composite Center.

Completion of Work.

Piles will be available at the HarborTech Faciltiy in Brunswick, ME on. June 30, 2013.

The driving and dynamic load testing of the FRP piles at the designated site shall be completed no later than September 30, 2013. The one FRP piles shell that is concrete-filled after driving shall cure for a minimum 28 days.

Piles shall be extracted and transported to UMaine no later than October 31, 2013.

Method of Measurement. The method of measurement for FRP Composite Piles, as described herein, shall be lump sum.

Basis of Payment. Payment for FRP Composite Pile, as described herein, shall be full compensation for all labor, materials, equipment and incidentals to coordinate receiving pile, transporting pile, storing pile, filling pile with concrete, driving pile, dynamic pile load testing piles, pile integrity testing, providing and installing pile pulling rings, extracting pile and transporting pile to the UMaine.

Pay Item		Pay Unit
501.55	Transporting, Driving and Testing FRP Composite Piles	Lump Sum

SPECIAL PROVISION
SECTION 502
STRUCTURAL CONCRETE
(QC/QA Acceptance Methods)

CLASS OF CONCRETE	ITEM NUMBER	DESCRIPTION	P	METHOD
A	502.21	Structural Concrete Abut. & Retaining Walls	$400	A
A	502.219	Structural Concrete Abut. & Retaining Walls	$400	A
A	502.239	Structural Concrete Piers	$400	A
A	502.24	Structural Concrete Piers (Placed under water) (Pier 1)	$400	A
S	502.24	Structural Concrete Piers (Placed under water)		C
S	502.249	Structural Concrete Piers (Placed under water)		C
A	502.26	Structural Concrete Roadway & Sidewalk on Steel Bridges	$400	A
A	502.31	Structural Concrete Approach Slab		C
LP	502.49	Structural Concrete Curbs	$425	A
LP	526.34	Permanent Concrete Transition Barrier	$425	A
LP	526.3401	Permanent Concrete Transition Barrier - Modified	$425	A
Fill	502.56	Concrete Fill		C

P values listed above reflect the price per cubic yard (CY) for all pay adjustment purposes.

The quantity used for Pay Adjustment purposes shall be the actual quantity of cast in place concrete placed and accepted. This quantity shall be computed by the Contractor and submitted to the Resident for approval.

May 5, 2010
Supersedes September 29, 2004

SPECIAL PROVISION
SECTION 502
STRUCTURAL CONCRETE
(Quality Level Analysis)

502.01 Description In second sentence, replace "…METHOD B Small Quantity Product Verification…" with "…METHOD B Statistical Acceptance…"

502.05 Composition and Proportioning Delete Table 1 and replace with the following;

TABLE 1- Methods A, B, and C

Concrete CLASS	Compressive Strength (PSI)		Permeability (COULOMBS)		Entrained Air (%)		Notes
	LSL	USL	LSL	USL	LSL	USL	
S	2,900	N/A	N/A	N/A	6.0	8.5	1, 5
A	4,350	-----	-----	2,400	6.0	8.5	1,2,5,6
P	-----	-----	-----	-----	5 ½	7 ½	1,2,3,4,5
LP	5,075	-----	-----	2,000	6.0	8.5	1,2,5,6
Fill	2,900	N/A	N/A	N/A	N/A	N/A	6

502.503 Delete and replace with the following;

"502.0503 Quality Assurance METHOD B The Department will determine the acceptability of the concrete through a quality assurance program.

The Department will take Quality Assurance samples a minimum of once per sublot on a statistically random basis. Quality Assurance tests will include compressive strength, air content and permeability.

Concrete sampling for quality assurance tests will be taken at the discharge point, with pumped concrete sampling taken at the discharge end of the pump line.

Lot Size A lot size shall consist of the total quantity represented by each class of concrete in the Contract, except in the case when the same class of concrete is paid for under both lump sum items and unit price items in the Contract; in this case, the lump sum item quantities shall comprise 1 lot and the unit price item quantities shall comprise a separate lot. A lot shall consist of a minimum of 3 and a maximum of 10 sublots. If a lot is comprised of more than 10 sublots, sized in accordance with Table #3, then this quantity shall be divided equally into 2, or more, lots such that there is a minimum of 3 and a maximum of 10 sublots per lot. If there is insufficient quantity in a lot to meet the recommended minimum sublot size, then the lot shall be divided into 3 equal sublots.

Sublot Size, General The size of each sublot shall be determined in accordance with Table #3. The Resident may vary sublot sizes based on placement sizes and sequence.

Sublot Size, Unit Price Items Sublot sizes will initially be determined from estimated quantities. When the actual final quantity of concrete is determined: If there is less than one-half the estimated sublot quantity in the remaining quantity, then this quantity shall be combined with the previous sublot, and no further Acceptance testing will be performed; if there is more than one-half the estimated sublot quantity in the remaining quantity, then this quantity shall constitute the last sublot and shall be represented by Acceptance test results. If it becomes apparent part way through a lot that, due to an underrun in quantity, there will be an insufficient quantity of concrete to comprise three sublots, then the Resident may adjust the sizes of the remaining sublots and select new sample locations based on the revised estimated quantity of concrete remaining in the lot.

Sublot Size, Lump Sum Items Each lot shall be divided into sublots of equal size, based on the estimated quantity of concrete.

TABLE 3

Quantity m^3 [cy]	Recommended Sublot Size m^3 [cy]
0-400 [0-500]	40 [50]
401-800 [501-1000]	60 [75]
801-1600 [1001-2000]	80 [100]
1601 [2001]or greater	200 [250]

Determination of the concrete cover over reinforcing steel for structural concrete shall be made prior to concrete being placed in the forms. Bar supports, chairs, slab bolsters, and side form spacers shall meet the requirements of Concrete Reinforcing Steel Institute (CRSI) Manual of Standard Practice, Chapter 3 Section 2.5 Class 1, Section 2.6 Class 1A, or Section 4. All supports shall meet the requirements for type and spacing as stated in the CRSI Manual of Standard Practice, Chapter 3. Concrete will not be placed until the placing of the reinforcing steel and supports have been approved by the Resident. If the Contractor fails to secure Department approval prior to placement, the Contractor's failure shall be cause for removal and replacement at the Contractor's expense. The Contractor shall notify the Resident, at least 48 hours prior to the placement, when the reinforcing steel will be ready for checking. Sufficient time must be allowed for the checking process and any needed repairs.

Evaluation of materials will be made using the specification limits in Table 1.

Compressive strength tests will be completed by the Department in accordance with AASHTO-T22 at ≥ 28 days, except that no slump will be taken. The average of two concrete cylinders per sublot will constitute a test result and this average will be used to determine the compressive strength for pay adjustment computations.

Testing for Entrained Air in concrete, at the rate of one test per sublot, shall be in accordance with AASHTO T152.

Rapid Chloride Permeability test specimens will be completed by the Resident in accordance with AASHTO T-277 at an age ≥ 56 days. Two 100 mm x 200 mm [4 in x 8 in] cylinders will be taken per sublot placed.

Surface Tolerance, Alignment and Trueness, Plumb and Batter, and Finish will be measured as described in Section 502.0502.

Rejection by Resident For an individual sublot with a calculated pay factor of less than 0.80, the Department will, at its sole discretion:

A. Require the Contractor to remove and replace the entire affected placement with concrete meeting the Contract requirements at no additional expense to the Department, or

B. Accept the material, at a reduced payment as determined by the Department. (See also Section 502.191)

For a lot in progress, the Contractor shall discontinue operations whenever one or more of the following occurs:

A. The pay factor for any property drops below 1.00 and the Contractor is taking no corrective action

B. The pay factor for any property is less than 0.90

C. The Contractor fails to follow the QC Plan"

502.18 Method of Measurement Under Section E. make the following change from "….Method A, and under Section 502.19…" to "…Method A, Section 502.0503- Quality Assurance Method B, and under Section 502.19…"

502.19 Basis of Payment Modify the first sentence of the seventh paragraph from "…accepted under Method A." to "…accepted under Method A and Method B."

502.191 Pay Adjustment for Compressive Strength Add the following as the second sentence to the first paragraph; "Pay factors (PF) for pay adjustments for compressive strength will be determined using the Quality Level Analysis as specified in Section 106."

502.192 Pay Adjustment for Chloride Permeability Delete and replace with the following;

"Pay factors (PF) for pay adjustments for Chloride Permeability will be determined using the Quality Level Analysis as specified in Section 106.

Values greater than 4000 coulombs shall be subject to rejection and replacement at no additional cost to the Department."

502.193 Pay Adjustment for Air Content Delete and replace with the following;

"Pay factors (PF) for pay adjustments for air content will be determined using the Quality Level Analysis as specified in Section 106."

Add the following Section;

"502.195 Pay Adjustments for Compressive Strength, Chloride Permeability and Air Content The Composite Pay Factor (CPF) for each lot of concrete shall be computed as follows:

CPF = [(Compressive Strength PF-1)(0.20)] + [(Air Content PF-1)(0.40)]
+ [(Chloride Permeability PF-1)(0.40)]

The pay adjustment for each lot of concrete shall be computed as follows:

Lot Pay Adjustment = P x CPF x Lot Size

There will be no positive pay adjustments for Method B Concrete."

SPECIAL PROVISION
SECTION 502
STRUCTURAL CONCRETE

(Fiber Reinforced Polymer Bridge Drains and Downspout)

Description:

This work shall consist of fabrication and delivery of Fiber Reinforced Polymer (FRP) Bridge Drains and FRP Downspout in accordance with the Plans and this specification.

Company Experience:

The supplier shall demonstrate successful experience producing FRP drainage products and related components that have been in service for a minimum of 3 years.

For local FRP manufacturers please contact:
Steve Von Vogt, Executive Director
Maine Composites Alliance
P.O. Box 129
Portland, ME 04112
svonvogt@mainecompositesalliance.org
(207) 828-1414

Materials and Fabrication Requirements:

The Contractor will submit fabrication details to the Resident Engineer for review. The Resident will be allowed 7 working days to review the submittal. Details shall be in accordance with the Plans and these specifications. All material and workmanship will meet or exceed ASTM C 582. The following is specified:

General:

- 3/8” thickness
- Chemical resistant Derakane 510C-350 Resin or equal to be used throughout
- Corrosion Barrier shall be 1 layer of Nexus (Burlington Industries) 100-10 surfacing veil followed by 4 layers .75 oz/sq ft chopped strand mat (Owens Corning Vetrotex), or approved equal. Structural portion shall be alternating plies of 1.5 oz/sq ft chopped strand mat and 24 oz/sq yd woven roving to the required thickness.

Bridge Drains:

- 12” inside diameter downspout
- Steel grating shall be commercial heavy - duty grating with 1 1/2" x 5/16" bearing bars spaced at 2 3/8” and 3/8" diameter cross bars spaced at 4”. The grating shall be centered in the drain top. All grating bars shall be galvanized in accordance with ASTM A 123.

- Galvanized grating clips and hardware
- Galvanized U-bolt and support angle
- #5 rebar tab welded to the scupper for securing drain in place

Pier 1 Downspout:

- 24” inside diameter flare
- 12” inside diameter downspout
- #5 rebar tab welded to the downspout for securing downspout in place

Abutment 2 Downspouts:

- 12” inside diameter downspout

Installation:

FRP Drains and FRP Downspout shall be stored and handled in accordance with the manufacturer’s recommendations. FRP Bridge Drains and FRP Downspouts will be accurately placed at the locations shown on the Plans or authorized, and adequate means provided for securely holding them in place during the placing of concrete. Any repairs to the drains and downspouts as a result of mishandling shall be done at the expense of the contractor.

Method of Measurement:

FRP Bridge Drains and FRP Downspouts will be measured by Each, for fabrication and delivery.

Basis of Payment:

FRP Bridge Drains and FRP Downspout will be paid for at the contract unit price Each. Such payment shall include compensation for all materials and labor necessary for the fabrication, delivery and installation of the Drains and Downspouts and all associated hardware in accordance with the Plans and this specification.

Payment will be made under:

Pay Item		Pay Unit
502.703	FRP Downspout	Each
502.72	FRP Bridge Drain – Type A	Each

SPECIAL PROVISION
SECTION 503
REINFORCING STEEL
(Corrosion Resistant Reinforcing)

503.01 Description: This section shall be replaced in its entirety by the following:

This work shall consist of furnishing and placing of reinforcement, either plain, epoxy coated, or corrosion resistant, in accordance with these specifications and in conformance with the Plans, Supplemental Specifications and Special Provisions.

503.02 Materials: This section has been amended to include:

All Corrosion Resistant Reinforcing shall meet the requirements of ASTM A1055/A1055M – 10e1, Zinc and Epoxy Dual – Coated Steel Reinforcing Bars.

Section X1 Guidelines for Job – Site Practices of ASTM A1055/A1055M – 10e1, Zinc and Epoxy Dual – Coated Steel Reinforcing Bars shall apply.

Surface preparation and patching of field – cut, dual – coated reinforcing bar ends shall conform to X1.3.12 of ASTM A1055/A1055M – 10e1, Zinc and Epoxy Dual – Coated steel Reinforcing Bars.

503.10 Method of Measurement: This section has been amended to include:

Corrosion Resistant Reinforcing will be measured by the Pound for fabrication, delivery and placing.

503.11 Basis of Payment: This section has been amended to include:

The accepted quantity of Corrosion Resistant Reinforcing will be paid for at the contract unit price per Pound. Payment shall include all materials, equipment and labor required for the fabrication, delivery and placing of the Corrosion Resistant Reinforcing.

Payment will be made under:

Pay Item		Pay Unit
503.30	Corrosion Resistant Reinf. System, Fab. & Del.	LB
503.31	Corrosion Resistant Reinf. System, Placing	LB

SPECIAL PROVISION
SECTION 506
SHOP APPLIED PROTECTIVE COATING
(Steel)

506.01 Description This work shall consist of applying protective coating to steel substrate in accordance with the Plans and this Specification. The protective coating system shall be as specified on the Plans.

ALL REQUIREMENTS IN THIS SPECIFICATION ARE THE RESPONSIBILITY OF THE CONTRACTOR UNLESS NOTED OTHERWISE.

506.02 Materials Materials shall comply with the requirements of the respective Subsections of this Specification.

506.03 Submittals Submit the following, as applicable:

A. The manufacturer's product data sheet for the specified protective coating system(s).
B. Material Safety Data Sheets.
C. Facility Certification, Endorsement or other Qualification(s)
D. Quality Control Plan
E. Quality Control Inspector (QCI) qualifications

506.04 General Specifications Specifications for the protective coating and/or protective coating systems are:

Zinc Rich Coating System	Subsections 506.10 through 506.19
Hot-Dip Galvanizing	Subsections 506.20 through 506.29

506.05 Inspection Quality Control (QC) is the responsibility of the Contractor. Inspect all aspects of the work and supervise all sampling, measurements and testing. Record measurements and test results in a clear and legible manner in a format acceptable to the Fabrication Engineer. Reject materials and workmanship that do not meet Contract requirements. The QCI may perform sampling, measurements and testing in addition to the minimum required. Make the results of all sampling, measurements and testing available to the Quality Assurance Inspector (QAI).

Training in surface preparation, coatings application, and inspection is required for QCI's. Acceptable training includes one or more of the following:

A. National Association of Corrosion Engineers (NACE) International: Coating Inspector Program Level 1 (minimum)
B. SSPC BCI Coatings Inspection Training and Certification for the Bridge Industry:

(Level I without certification), or Level II

C. Other training that is acceptable to the Department.

Quality Assurance (QA) is the prerogative of the Department. The QAI's responsibility is to ensure that the QC personnel are performing acceptably, verify documentation, periodically inspect workmanship and witness sampling, measurements and testing. The QAI will schedule measurements and testing deemed necessary by the Resident in addition to the minimum requirements in a manner that minimizes interference with the production schedule.

The QAI has the authority to reject material or workmanship that does not meet the Contract requirements. The acceptance of material or workmanship by the QAI will not preclude subsequent rejection, if found unacceptable by the Department.

506.06 Non-Conforming Work Submit a non-conformance report to the Fabrication Engineer describing the deficiencies and proposed solution. Correct or replace rejected coatings as directed by the Fabrication Engineer.

506.07 Facilities for Inspection Provide a private office at the fabrication plant for the Department's inspection personnel, or QAI's. The office shall be in close proximity to the work. The office shall be climate controlled to maintain the temperature between 68° F and 75° F and have the exit(s) closed by a door(s) equipped with a lock and 2 keys which shall be furnished to the Inspector(s).

The QAI's office shall meet the following minimum requirements:

Description	Quantity
Office area (minimum ft^2)	100
Drafting Table Surface (ft^2)	35
Drafting stools-each	1
Office Desk	1
Ergonomic Swivel Chairs	1
Folding Chairs	2
High-speed internet connection (ports) or wireless	1
Fluorescent Lighting of 100 foot-candles minimum for all work areas	2
110 Volt 60 Cycle Electric Wall Outlets	3
Wall Closet	1
Waste Basket with trash bags	1
Broom	1
Dustpan	1
Water Cooler	1
Cleaning materials-floor, surfaces, windows, for duration of the project	

The Contractor will be responsible for disposing of trash and supplying commercially bottled water for the water cooler.

The QAI has the option to reject any furniture or supplies provided to the QAI's office, based on general poor condition.

Provide parking space for the QAI(s) in close proximity to the entrance to the QAI's office. Maintain the pathway between the parking area and the QAI's office so that it is free of obstacles, debris, snow and ice.

The facilities and all furnishings shall remain the property of the Contractor upon completion of the Work. Payment for the facilities, heating, lighting, telephone installation, internet connection, basic monthly telephone and internet charges and all furnishings shall be incidental to the Contract.

Failure to comply with the above requirements will be considered denial of access to the Work for the purpose of inspection. The Department will reject all Work done when access for inspection is denied.

506.08 Applicator Qualification Shop-applied paint systems shall be applied by applicators that hold a current AISC Sophisticated Paint Endorsement (SPE) or are qualified in accordance with SSPC-QP3, *Standard Procedure for Evaluating Qualifications of Shop Painting Applicators.* For specialty items, the Fabrication Engineer may accept other shop qualifications based on experience and/or an audit by the Department. Thermal Spray Coating (TSC), including sealers and top coating, fusion bonded coatings and hot-dip galvanizing shall be applied in facilities with a minimum of five years experience of satisfactory performance.

506.09 Inspection Measure and record the following, as applicable to the coating application, in a Job Control Record (JCR):

A. Surface preparation - cleanliness and anchor profile.
B. Environmental conditions – ambient temperature, surface temperature, relative humidity, dew point.
C. Coating batch and/or lot number, date of manufacture and shelf life.
D. Mixing/thinning.
E. Dry Film Thickness (DFT) for each coat.
F. Cure data-time/temperature/relative humidity.
G. Final inspection and acceptance by the QCI.

Submit the format for the JCR to the Fabrication Engineer for review prior to beginning application of protective coating.

Provide work area illumination as follows:

Work Area Illumination Requirements in Foot Candles		
Description of Work	Minimum	Recommended
General Work Area Illumination	10	20
Surface Preparation and Coating	20	50
Inspection	50	200

Provide a light meter that measures illumination in foot candles.

Use *SSPC-VIS 1, Guide and Reference Photographs for Steel Surfaces Prepared by Dry Abrasive Blast Cleaning or SSPC-VIS 3, Guide and Reference Photographs for Steel Surfaces Prepared by Hand and Power Tool Cleaning* as required in order to determine acceptable surface cleanliness.

Measure and record the environmental conditions during application and during the entire curing cycle. Failure to provide accurate and complete environmental data may result in rejection of the coating or an extended cure time as determined by the Fabrication Engineer.

Measure and record the DFT of each coat in accordance with *SSPC-PA 2, Measurement of Dry Coating Thickness with Magnetic Gages* (PA 2).

ZINC RICH COATING SYSTEM

506.10 Description This work shall consist of surface preparation and application of coating systems in accordance with the Plans and this Specification. The color shall be as specified on the Plans.

506.11 Materials Coatings systems shall be from the Northeast Protective Coating Committee (NEPCOAT) Qualified Products List (QPL), list A or B. The list may be found through NEPCOAT's Web page: http://www.nepcoat.org.

Provide the paint batch description, lot number, date of manufacture, shelf life and the manufacturer's storage requirements to the QAI. Provide the manufacturer's published data sheet for each coat of the coating system including equipment, surface cleanliness, anchor profile, mixing, thinning, application, and cure time for the entire range of allowable environmental conditions and the DFT.

506.12 Limits of Work Coat all surfaces exposed in the assembled product unless otherwise specified. Apply a mist coat, 0.5 to 1.0 mils, of primer only to surfaces to be embedded in concrete.

Apply primer to faying surfaces of bolted connections that develop a class B slip coefficient in accordance with the *"Specification for Structural Joints Using ASTM A325 or A 490 Bolts" by the Research Council of Structural Connections* (RCSC). Provide

documentation to demonstrate that the primer was tested and the requirements were met. Do not exceed the DFT applied for test purposes.

506.13 Surface Preparation Surface cleanliness shall be *SSPC-SP 10, Near-White Blast Cleaning* (SP 10) unless a higher standard of surface cleanliness is required by the manufacturer's published data sheet. Round all corners exposed in the assembled product to approximately a 3/32 inch radius, prior to abrasive blast cleaning. A series of tangents that approximate a radius may be considered as a rounded edge if there are no sharp breaks. Provide radius gauges to inspect corner preparation. The radius shall be the minimum specified above, but not greater than 3/16 inch.

The abrasive blast media shall meet the requirements of *SSPC-AB 1, Mineral and Slag Abrasives, AB 2, Cleanliness of Recycled Ferrous Metallic Abrasives and/or AB 3, Ferrous Metallic Abrasive*. The anchor profile shall be angular and meet the requirements of the coating manufacturer's published data sheet.

If compressed air is used for abrasive blast cleaning, perform a blotter test ASTM D 4285 at the beginning of each shift and at any time requested by the QAI. Notify the QAI prior to performing the test.

Measure and record the anchor profile in accordance with ASTM D 4417 Method C (replica tape). If the anchor profile fails to meet the minimum requirements, re-blast the substrate until the required anchor profile is achieved. If the anchor profile exceeds the maximum allowed, generate a Non-Conformance Report (NCR) describing the condition of the substrate and a proposed solution and submit it to the Fabrication Engineer for review.

If it has been established to the satisfaction of the QAI that the abrasive blast equipment is capable of providing uniform, acceptable anchor profile, a diminished degree of testing may be allowed at the discretion of the Fabrication Engineer.

The allowable time between abrasive blast cleaning and primer application shall not exceed the manufacturer’s published recommendations or one work shift, whichever is less. Any evidence of rust bloom, flash rust or other surface conditions that cause the substrate cleanliness to fall outside the specified cleanliness standard will be rejected. Inspect all substrate immediately prior to coating application. Re-blast steel substrate that does not meet the surface cleanliness requirements.

506.14 Mixing and Application Record the batch and lot numbers of the coating, the type and amount of thinner used, the time and pot life of the coating.

Add thinner in accordance with the manufacturer's published data sheet. Measure thinner with a graduated cup, or other container, that clearly indicates the amount of thinner being added. Record the amount of thinner added. Mix the paint using the method, equipment and time recommended by the coating manufacturer. Mix each

component separately and mix all components together for at least the minimum time recommended on the Manufacturer's Product Data Sheet but not less than two minutes.

Measure the environmental conditions in the immediate vicinity of the piece(s) being coated during the coating operation and during the entire cure period. Provide two data loggers capable of measuring ambient humidity and temperature. The data loggers shall come with software that can download the data onto a computer. Print out the data and provide a copy to the QAI for review prior to applying the subsequent coat of paint. Place the data loggers in the immediate vicinity of the coating operation during the entire application and curing cycle. The data will be used to determine that the cure/recoat time requirements for each coat have been met. Failure to comply will result in the coating being cured for the maximum time necessary to assure adequate cure, as determined by the Fabrication Engineer.

Stripe all corners, fasteners, welds and locations with poor access, in accordance with *SSPC-PA 1, Shop, Field and Maintenance Painting of Steel* (PA 1). Do not stripe using inorganic zinc primer (IOZ). Stripe the IOZ primer between the primer and intermediate coats using the intermediate coating.

Apply the coating using equipment recommended in the Manufacturer's Product Data Sheet, or equal. Apply the coating in a uniform manner without sags, runs or drips.

506.15 Dry Film Thickness Measure and record the DFT of each coat in accordance with PA 2. Record the following:

A. Gauge type/manufacturer/model
B. Serial number
C. Coat/shim used for calibration (e.g., Primer Coat or 5 mil shim)
D. Measurements/spot average/location
E. Cure time
F. Non-conforming areas and determination for correction

Each piece or area presented for acceptance, regardless of size, shall be considered a separate structure for purposes of determining the number of spot measurements to be taken, except that large quantities of small parts and/or secondary framing members coated at the same time may be measured at a lesser frequency, as directed by the Fabrication Engineer. When random DFT testing of a large quantity of small parts and/or secondary framing members results in unacceptable DFT's, the Contractor shall have the option of measuring and documenting the DFT of each piece or removing the coating and/or recoating all pieces represented in the production lot.

506.16 Touch-up and Repairs Touch-up is the repair of minor blemishes, including but not limited to, scratches and abrasions that to do not penetrate underlying layers of coating. Perform touch-up using the same coating and methods specified in the

Manufacturer's Product Data Sheet. Cure the touch-up coating in the same manner as the original coating.

Repair coating damage that penetrates underlying layers in accordance with the Manufacturer's Product Data Sheet and this Specification. Prepare areas to be repaired in a manner that assures the proper adhesion of each coat. Feather back each damaged layer so that each repair coat is continuous with each corresponding existing coat. The topcoat shall be smooth and uniform in appearance. Repair damaged or unacceptable shop coating before the piece is removed from the paint area.

506.17 Handling and Storage Handle coated members in a manner that avoids damage to the coating. Lift and move members using non-metallic slings, padded chains and beam clamps, softeners or by other non-injurious methods. Store painted material in a manner that prevents damage to the coating.

Document damage to the coating that is discovered after the product is loaded for shipment to the job site. Minor damage as a result of handling shall be considered field repair unless, in the opinion of the Fabrication Engineer, the damage is the result of negligence or poor handling methods. Damage that is deemed to be the result of negligence or poor handling methods shall be repaired as directed by the Fabrication Engineer.

506.18 through 506.19- RESERVED

HOT-DIP GALVANIZING

506.20 Description This work shall consist of surface preparation and application of hot-dip galvanizing in accordance with the Plans and this Specification. Hot-dip galvanizing shall meet the requirements of *AASHTO M 111/ASTM A 123, Standard Specification for Zinc (Hot-Dip Galvanized) Coatings on Iron and Steel* (A 123), including any applicable requirements listed in Section 2-Referenced Documents. The minimum average coating thickness grade shall conform to Table 1. The frequency of testing shall be in accordance with Section 6. The choice of the test method is the prerogative of the Contractor. Record the test results and provide them to the Department. Provide certification of compliance and written test results to The Department in accordance with A 123 -Section 10.

506.21 Surface Preparation Abrasive blast-clean the steel to a minimum of *SSPC-SP 6, Commercial Blast Cleaning* (SP6) prior to galvanizing. Grind all corners exposed in the assembled product to a 1/16 inch radius prior to galvanizing.

506.22 Repairs Repairs to galvanizing shall be in accordance with ASTM *A 780, Standard Practice for Repair of Damaged and Uncoated Areas of Hot-Dip Galvanized Coatings* (A 780), Annex A1 or A3. Zinc-rich paints for repairs may only be used with approval of the Fabrication Engineer.

506.23 Top-coating Galvanized Surfaces Areas of galvanized surfaces to be top-coated will be described on the Plans or in the Special Provisions.

Do not use chromate quenching or other types of quenching after galvanizing. Remove runs, sags, dross and other deleterious material from surfaces to be painted. Provide a smooth uniform surface, free of heavy build areas or other discontinuities that will project through the finish coat. Perform repairs to galvanizing in accordance with A 780. Remove visible surface contaminants in accordance with *SSPC-SP 1, Solvent Cleaning* (SP 1) prior to blast cleaning. Blast-clean surfaces to be coated in accordance with *SSPC-SP 7/NACE No.4-Brush-Off Blast-Cleaning* (SP 7). Measure the anchor profile in accordance with *ASTM D 4417 Method C* (replica tape). Record the results in a manner acceptable to the Fabrication Engineer. Assure that the anchor profile corresponds with the anchor profile requirements on the Manufacturer's Product Data Sheet.

506.24 Materials Provide materials in accordance with 506.11.

506.25 Mixing and Application Mix and apply in accordance with 506.14.

506.26 Dry Film Thickness Measure and record the DFT in accordance with 506.15.

506.27 Touch-up and Repairs Perform touch-up and repairs in accordance with 506.16.

506.28 Handling and Storage Handle and store material in accordance with 506.17.

506.29- RESERVED

THERMAL SPRAY COATING

506.30 Description. This work consists of application of Thermal Spray Coatings (TSC) to steel substrate in accordance with the Plans and this Specification. Requirements that are not stated in this specification shall be performed in accordance with Joint Standard *SSPC-CS 23.00/AWS C2.23M/NACE No. 12, Specification for the Application of Thermal Spray Coatings (Metallizing) of Aluminum, Zinc, and Their Alloys and Composites for the Corrosion Protection of Steel.*

506.31 Materials. Feedstock shall meet the requirements of ASTM B 833, 85/15 Zinc-Aluminum (W-ZnAl-2). The Contractor shall submit a certified analysis of the feedstock to the Fabrication Engineer.

Seal coat and topcoat shall meet the following requirements:

Seal Coat	As recommended by the Topcoat Manufacturer

Topcoat	A listed topcoat product from the NEPCOAT QPL System

The seal coat shall contain pigmentation to indicate uniformity of application.

Topcoat shall be sampled and tested in accordance with 506.11.

506.32 Surface Preparation. Prior to abrasive blast cleaning, round all corners exposed in the assembled product to approximately a 1/16 inch radius. A series of tangents to the approximate radius will be considered as a rounded edge.

Abrasive blast clean all surfaces to be coated to the requirements of SSPC SP 5/NACE No. 1, White Metal Blast Cleaning. SSPC VIS. 1 shall be used to determine acceptable cleanliness.

The anchor profile shall be 2.0-4.0 mils. Measure the anchor profile in accordance with ASTM D 4417 Method C. If the anchor profile fails to meet the minimum required profile, re-blast the substrate until the minimum required anchor profile is achieved.

Measure the anchor profile of the substrate on the first piece blasted at the beginning of each shift and at a frequency not to exceed 4 hours thereafter. A measurement shall consist of one measurement on each plane of structural shapes or at approximately 120° intervals on pipes and round tubes.

If compressed air is used for abrasive blast cleaning, perform a blotter test in accordance with ASTM D 4285 at the beginning of each shift. The Q.A.I. shall be present to witness the blotter test.

506.33 TSC Requirements. The coating thickness shall be between 14 mils and 17 mils. The DFT on faying surfaces shall not exceed the thickness tested for Class B slip coefficient rating.

The TSC shall have a minimum tensile bond of 725 psi. The tensile bond shall be tested in accordance with ASTM D 4541-02. The frequency of testing shall be one test every 500 ft^2 or once per shift, whichever is less. The test location will be as directed by the Q.A.I. The specified tensile force shall be applied to the TSC and removed. If the test does not reveal a failure of the TSC, the tensile bond shall be considered acceptable. If the test reveals a failure of the TSC, the coating shall be rejected.

A bend test as described in SSPC-CS 23.OO/AWS C2.23M/NACE No. 12. Section 6 shall be conducted at the beginning of each shift. If the bend test fails, take corrective action and perform another test.

Document the results of the tensile bond test and bend test in the JCR.

The TSC shall have a uniform appearance, free from blistering, cracks, loose particles, or exposed steel substrate when examined with 10-X magnification.

506.34 TSC Application. Apply the TSC by the arc spray process. Thermal spray equipment shall be set up, calibrated and operated per the manufacturer's instructions and technical manuals or the Thermal Spray Coating Applicator's (TSCA) refinement thereof and as validated by the Job Reference Standard (JRS).

Measure and record in the JCR the ambient temperature, surface temperature, relative humidity and dew point near the pieces being coated immediately prior to application. The substrate shall be 5° F above the dew point at the time of application.

Coat the substrate with a 1 mil to 2 mil flash/primer coat followed by several thin, overlapping passes to build the required DFT. Top flanges of beams requiring shear connectors shall receive a flash/primer coat only.

506.35 Seal Coat and Top Coat Application. Apply the seal coat within eight hours of the TSC application. Apply the topcoat after the seal coat has cured. The surfaces shall be free from contaminants immediately prior to application of the seal coat and topcoat.

Apply the seal coat and topcoat in accordance with SSPC-PA 1, "Shop, Field and Maintenance Painting", and the coating manufacturer's published recommendations.

The topcoat shall be applied to the outside surfaces and bottom flanges of bridge fascia beams.

Coating thickness shall be measured in accordance with SSPC-PA 2. The DFT shall conform to the requirements of the manufacturer's published data sheet. For the measurement of coating thickness, each piece coated will be considered a separate structure. Record the DFTs in the JCR.

506.36 Repairs. Repair damage to TSC by re-blasting the damaged area and re-applying TSC in accordance with this Specification.

Top coat shall repaired or touched-up in accordance with 506.16 and 506.18.

506.37 Through 506.39 vacant.

506.60 Method of Measurement and Basis of Payment. The entire cost of protective coating shall be considered incidental to the bridge component to which it is applied.

SPECIAL PROVISION
SECTION 507
RAILINGS
(Maine Scenic Bridge Railing)

507.01 Description This section has been amended as follows:

This work shall consist of the furnishing of all materials for, and the construction of, Maine Scenic Bridge Railing in accordance with these specifications and the lines and grades shown on the plans.

507.02 Materials This section has been replaced in its entirety with the following:

Materials shall meet the requirements of the following Sections of Division 700 – Materials

Steel Bridge Rail:	Structural Steel	713.01

507.05 Steel Bridge Railing The following is added to this section:

All steel parts shall be abrasive blast-cleaned to SSPC-SP6 and then hot dipped galvanized in accordance with Special Provision 506. Hardware shall be hot dip galvanized in accordance with Special Provision 506.

507.08 Method of Measurement This section is amended as follows:

Maine Scenic Bridge Railing will be measured as one lump sum unit; erected and accepted, in accordance with the dimensions shown on the Plans or as directed by the Engineer.

507.09 Basis of Payment This section is amended as follows:

The accepted Maine Scenic Bridge Railing will include the furnishing of all materials, labor, galvanizing and/or protective coating and incidentals required for the installation of the rail system complete in place.

Payment will be made under:

Pay Item		Pay Unit
507.0836	Maine Scenic Bridge Railing, 3 Bar	Lump Sum

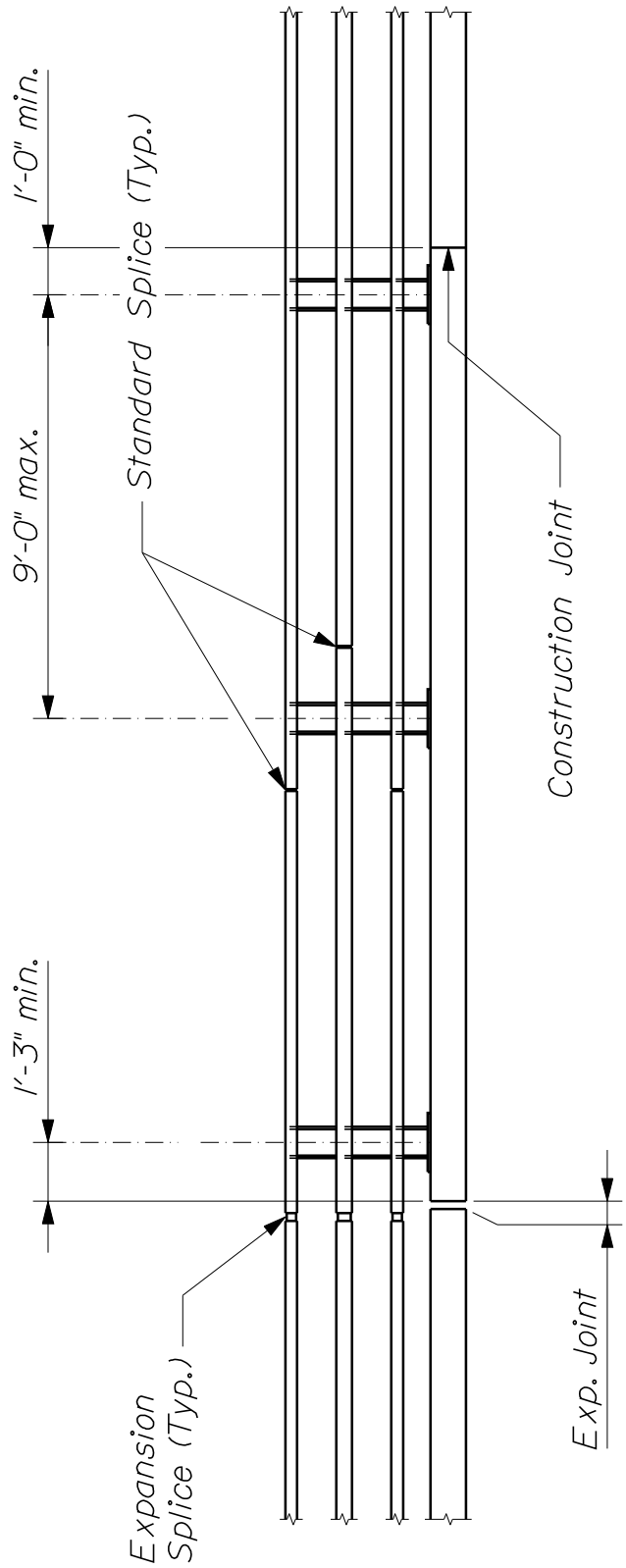

~ BRIDGE RAILING ELEVATION ~

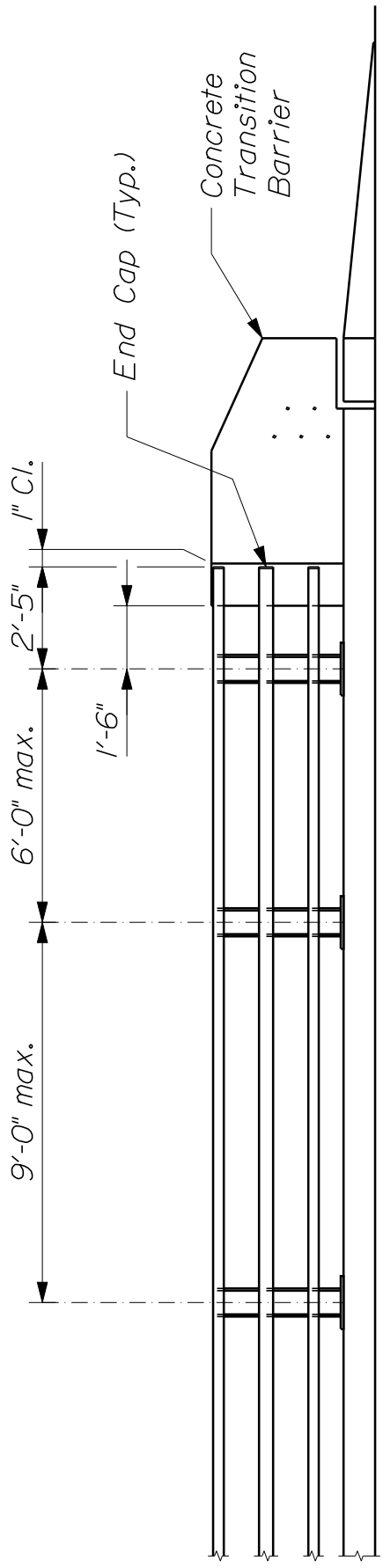

~ BRIDGE RAILING END ELEVATION ~

Suppl.
Std. Detail

MAINE SCENIC BRIDGE RAILING

Page No. 1 of 16

March 2013

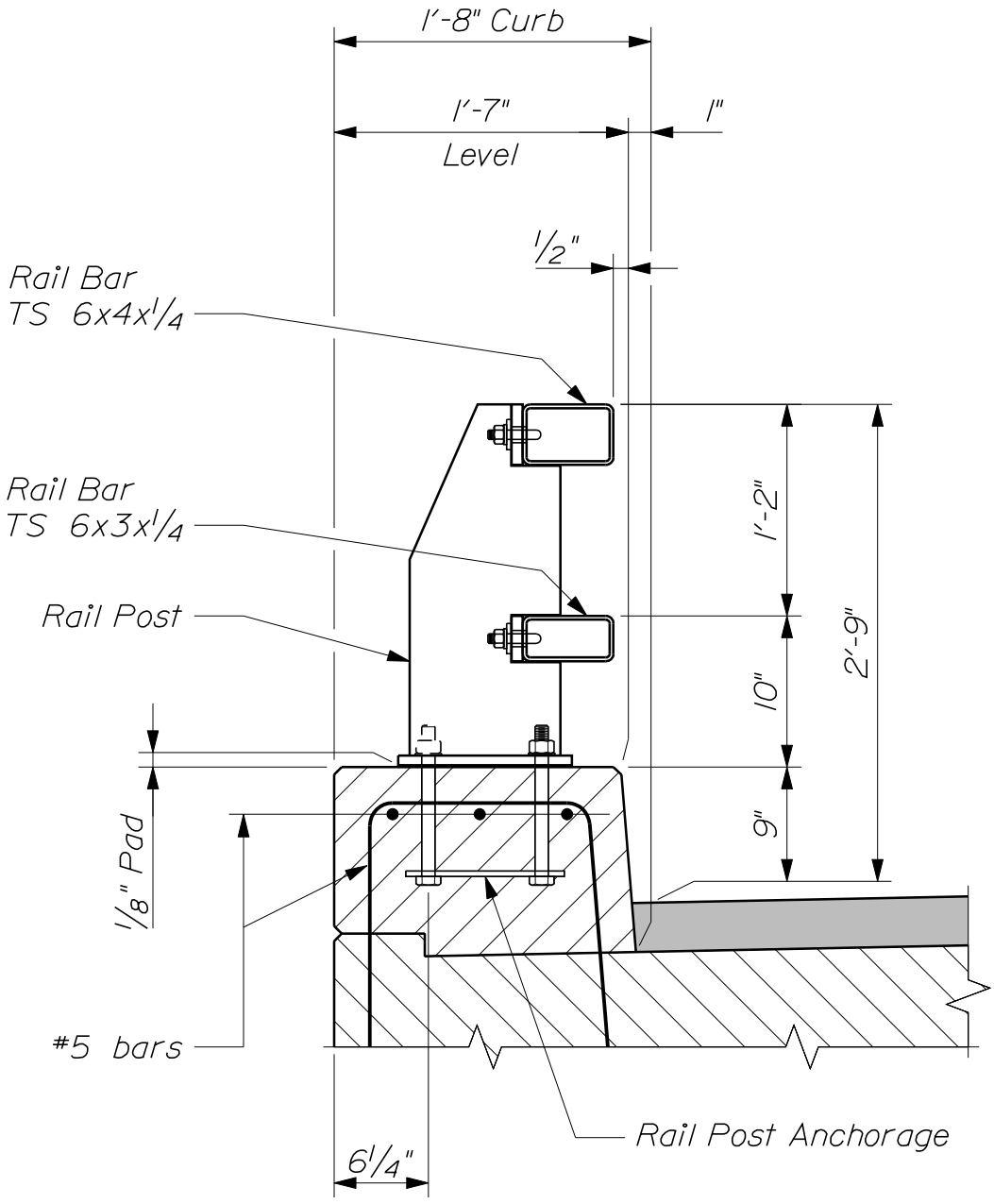

~ TYPICAL RAILING SECTION ~
(2 - Bar Traffic Railing)

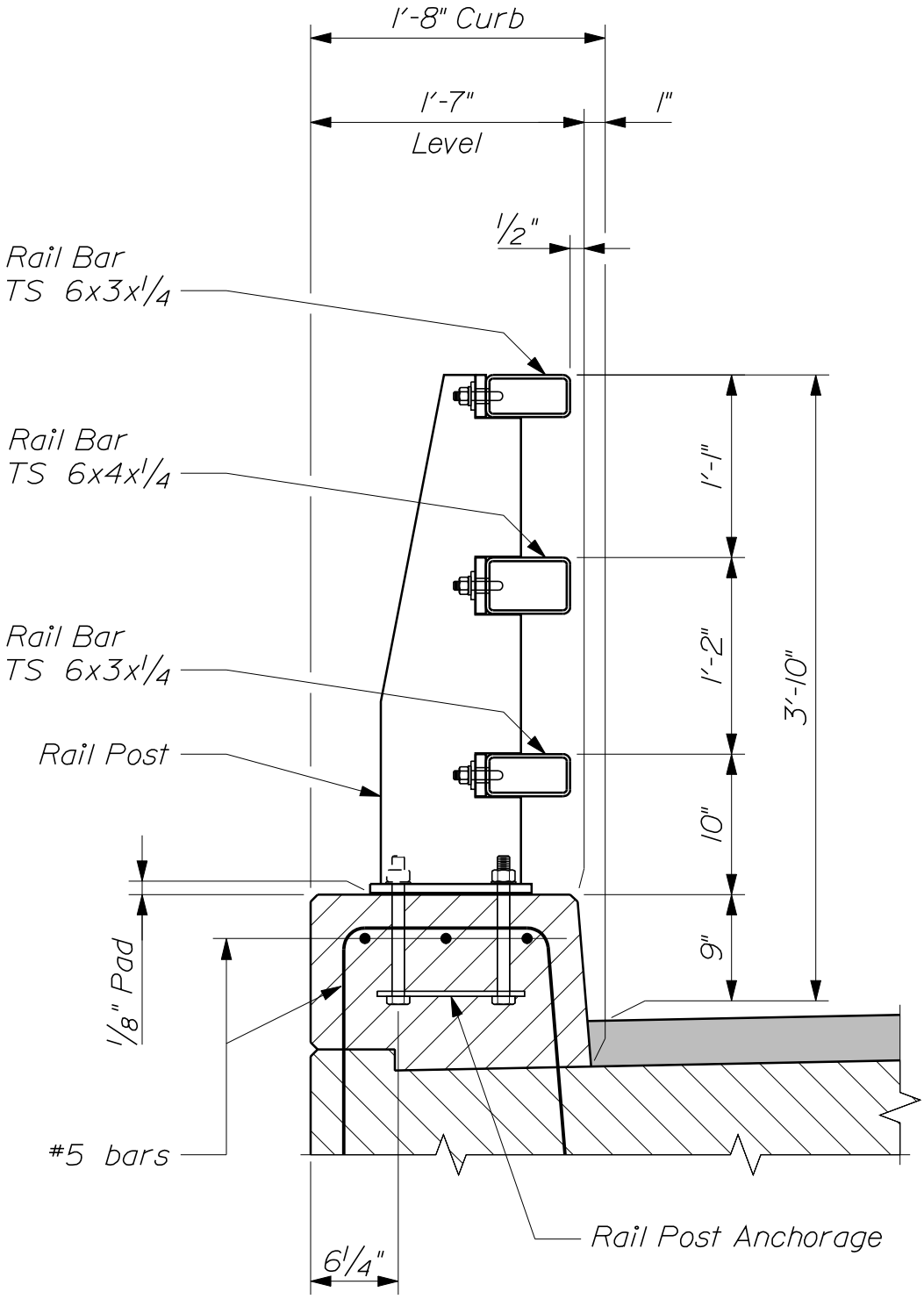

~ TYPICAL RAILING SECTION ~
(3 - Bar Traffic / Bicycle Railing)

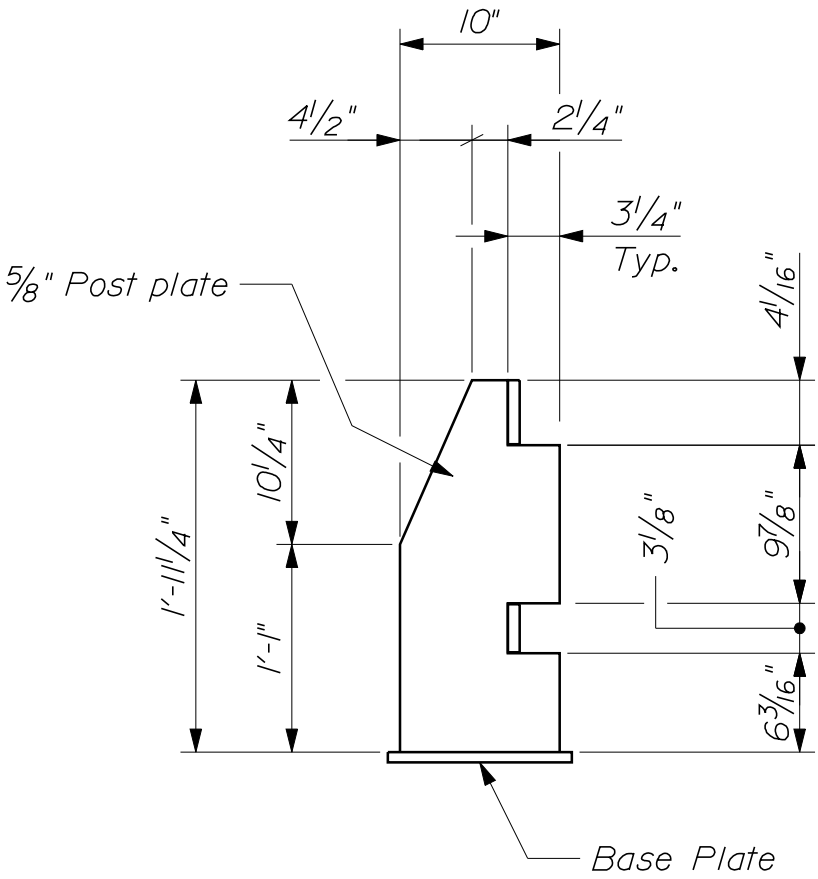

~ 2 - BAR RAIL POST SIDE ELEVATION ~

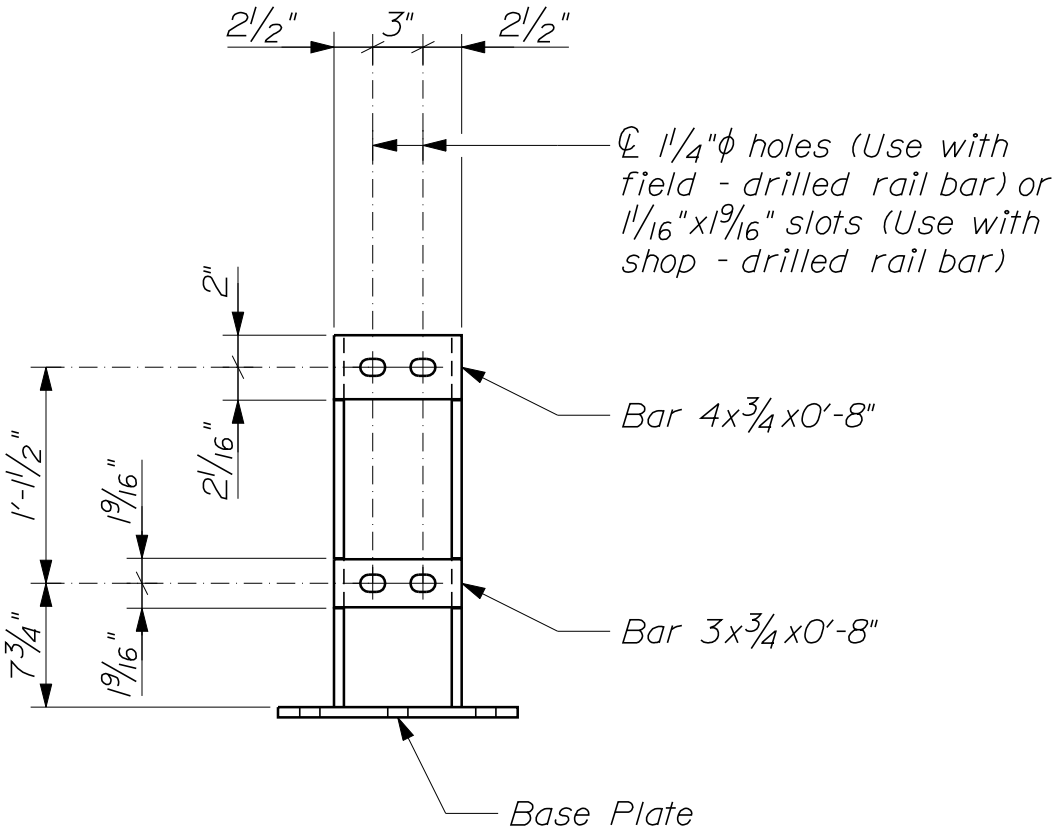

~ 2 - BAR RAIL POST FRONT ELEVATION ~

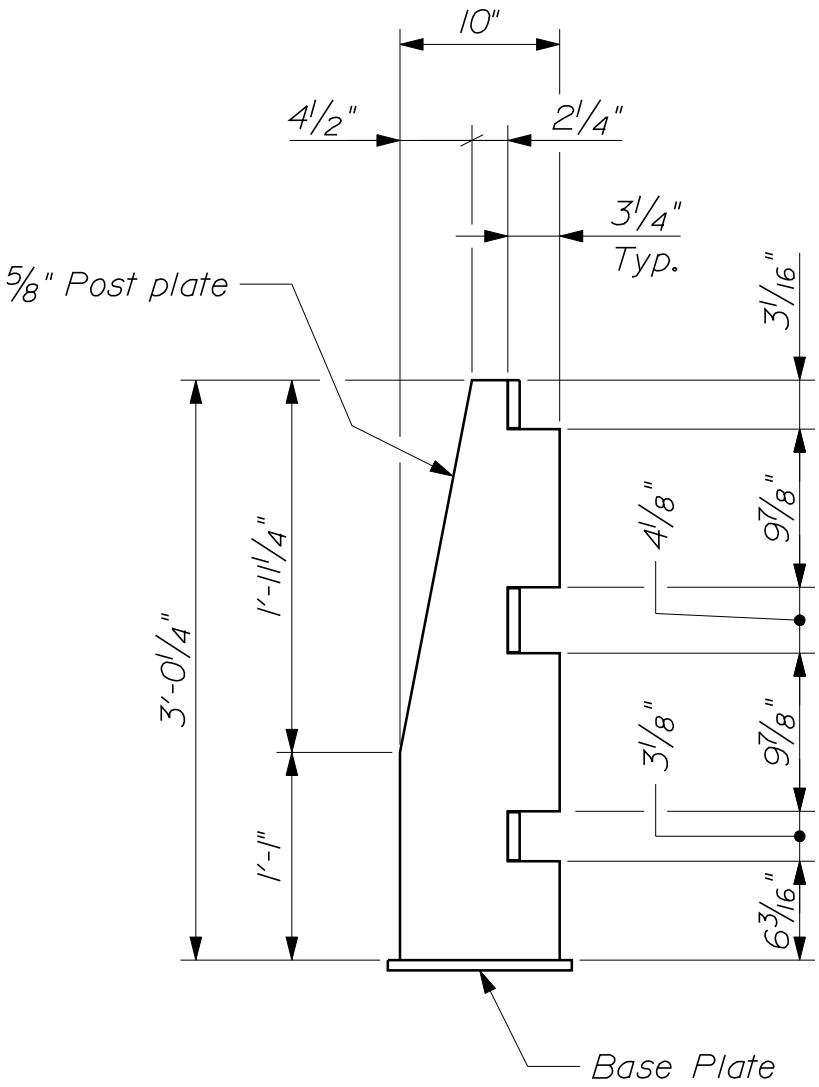

~ 3 - BAR RAIL POST SIDE ELEVATION ~

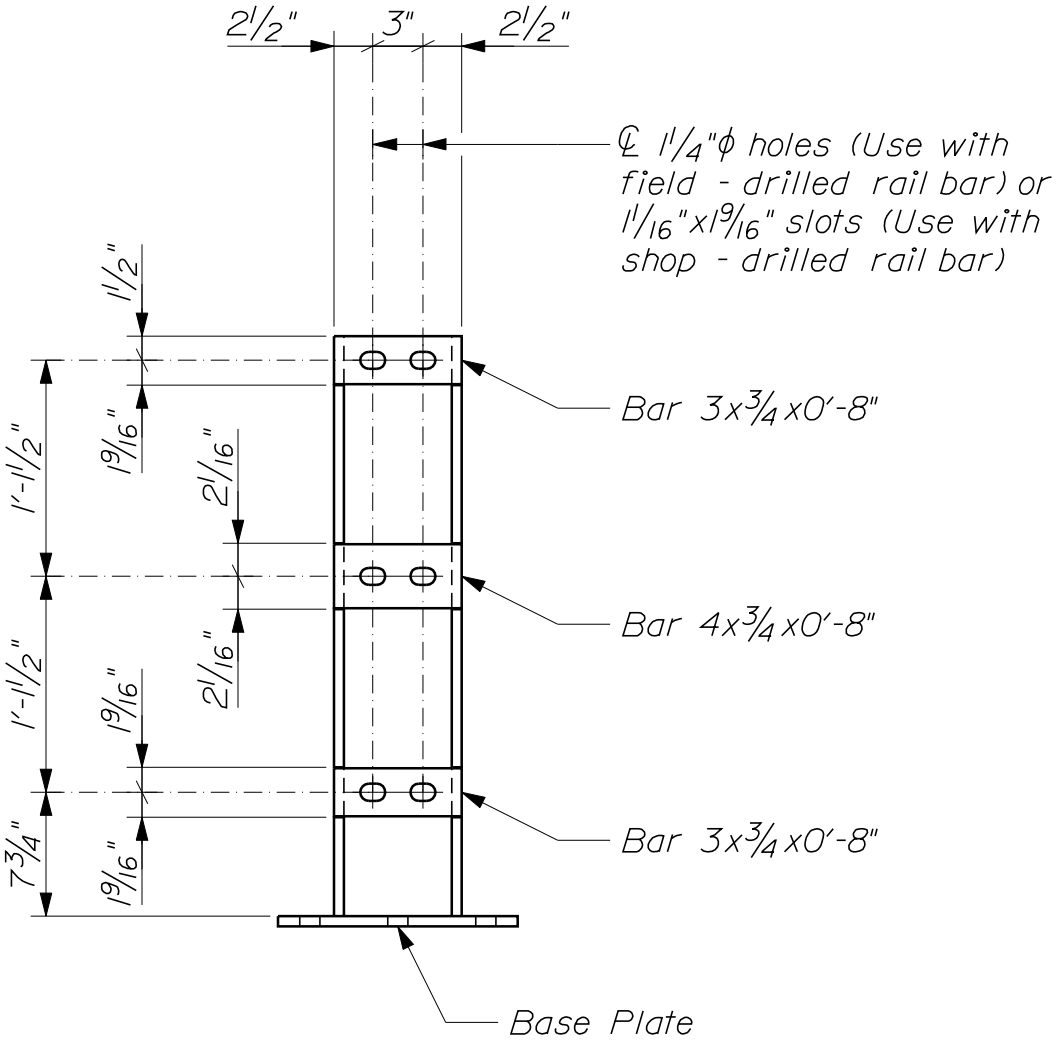

~ 3 - BAR RAIL POST FRONT ELEVATION ~

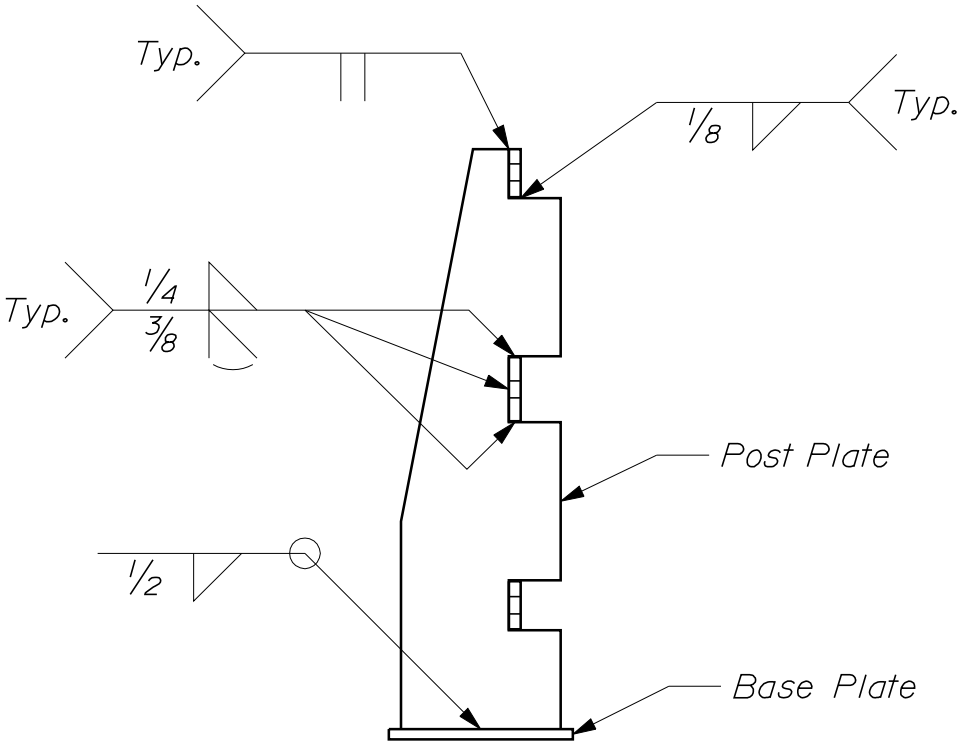

~ RAIL POST WELD DETAIL ~
(3 - bar railing shown; 2 - bar railing similar)

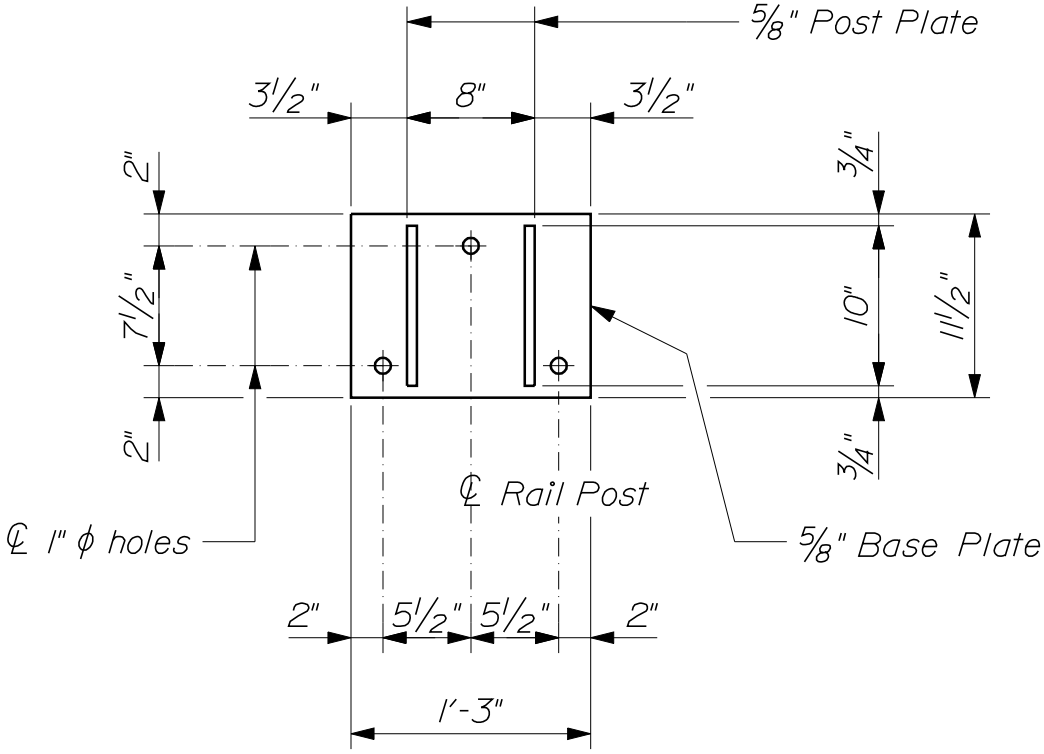

-- RAIL POST PLAN --

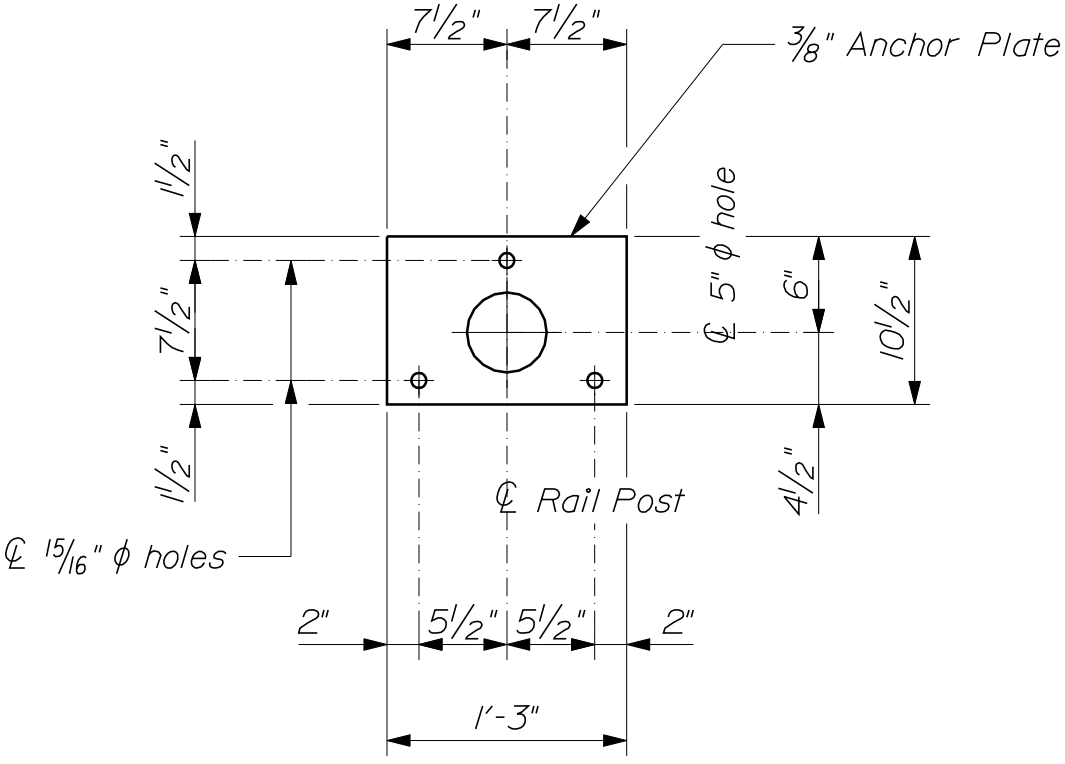

-- ANCHOR PLATE PLAN --

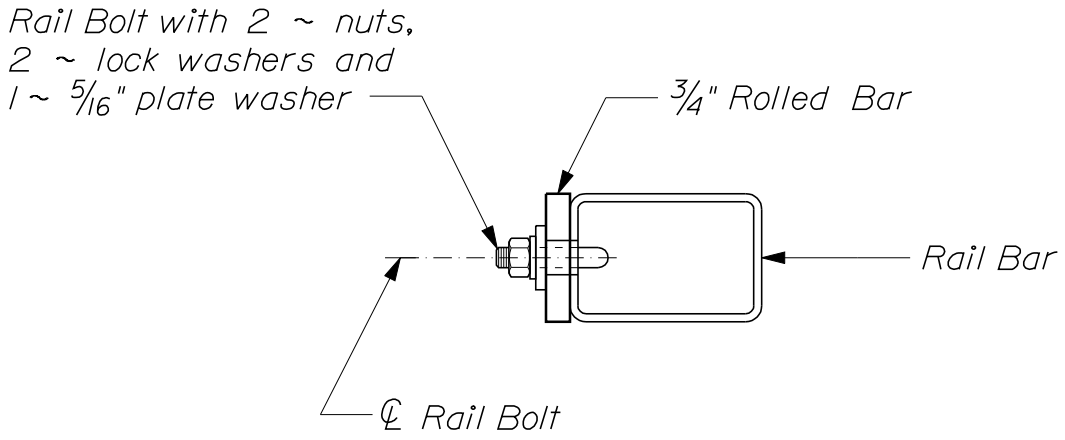

~ RAIL BAR CONNECTION DETAIL ~

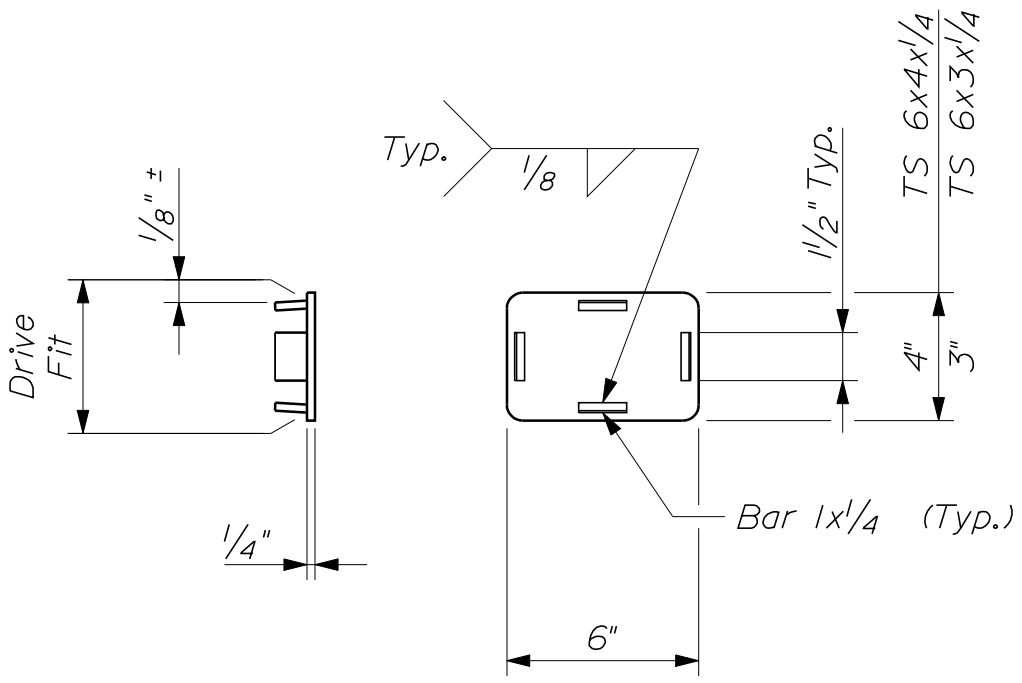

~ RAIL BAR END CAP ~

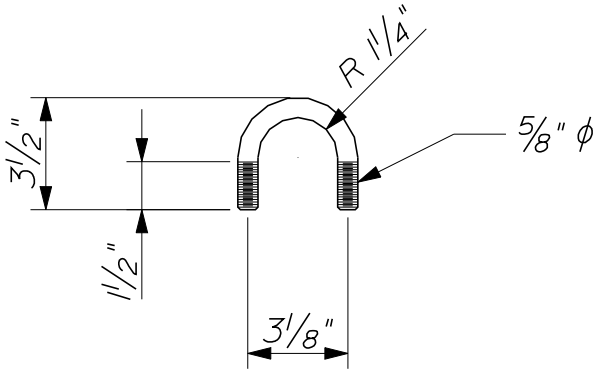

~ RAIL BOLT DETAIL ~

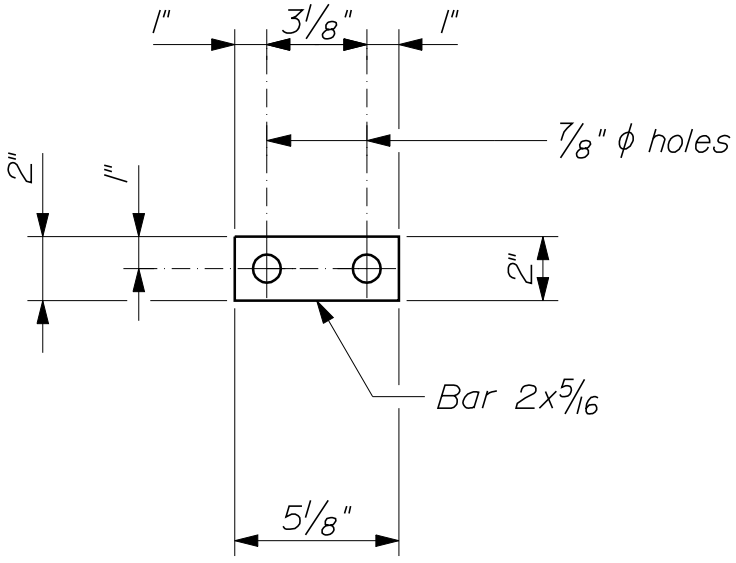

~ PLATE WASHER ~

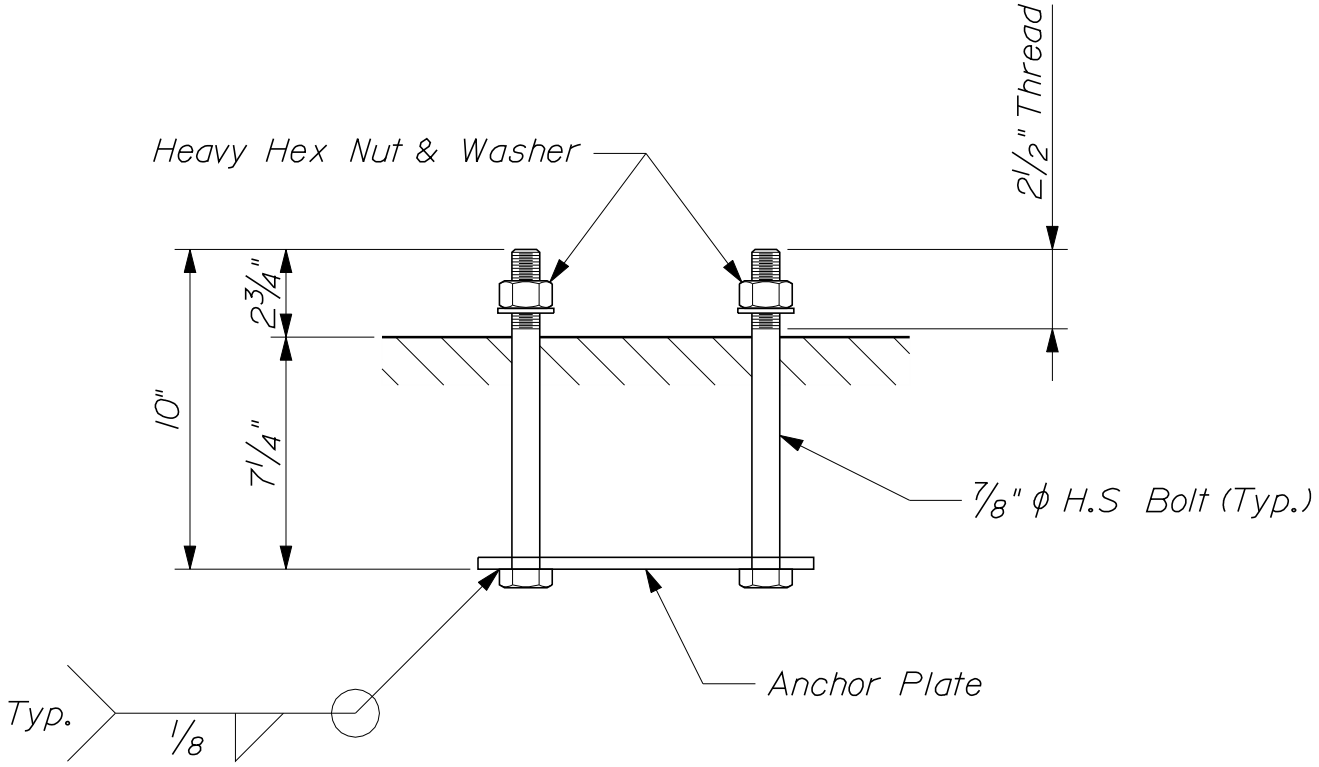

~ RAIL POST ANCHORAGE ~

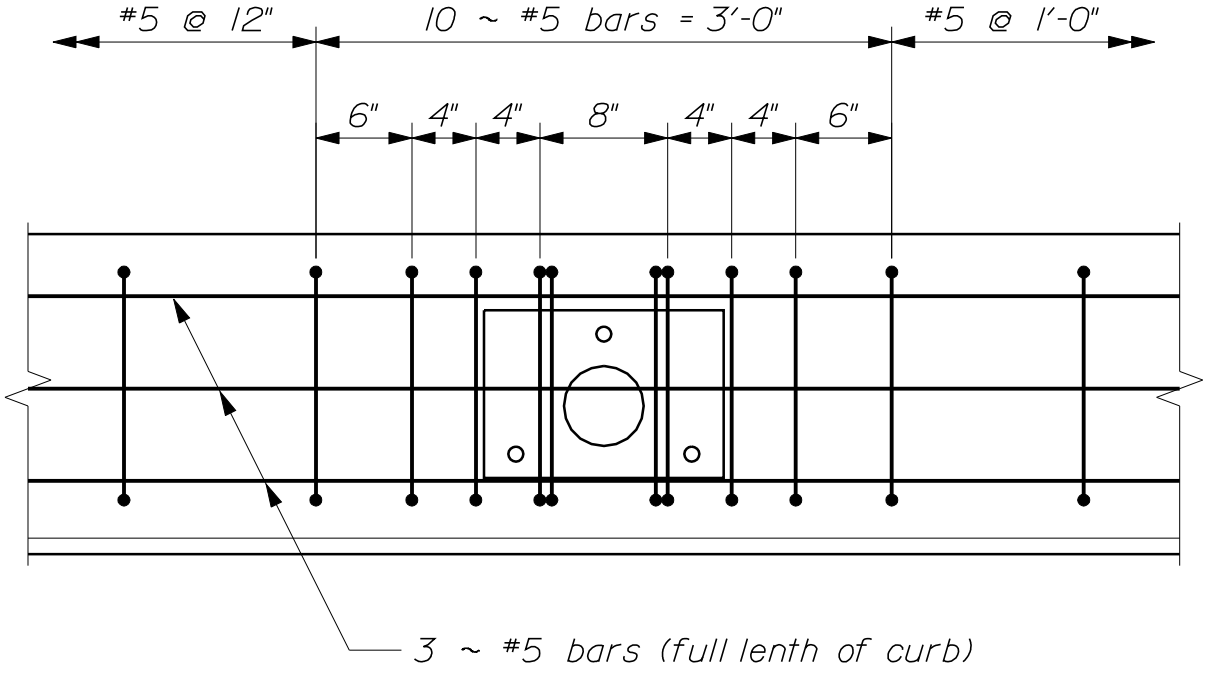

~ CURB REINFORCING PLAN ~

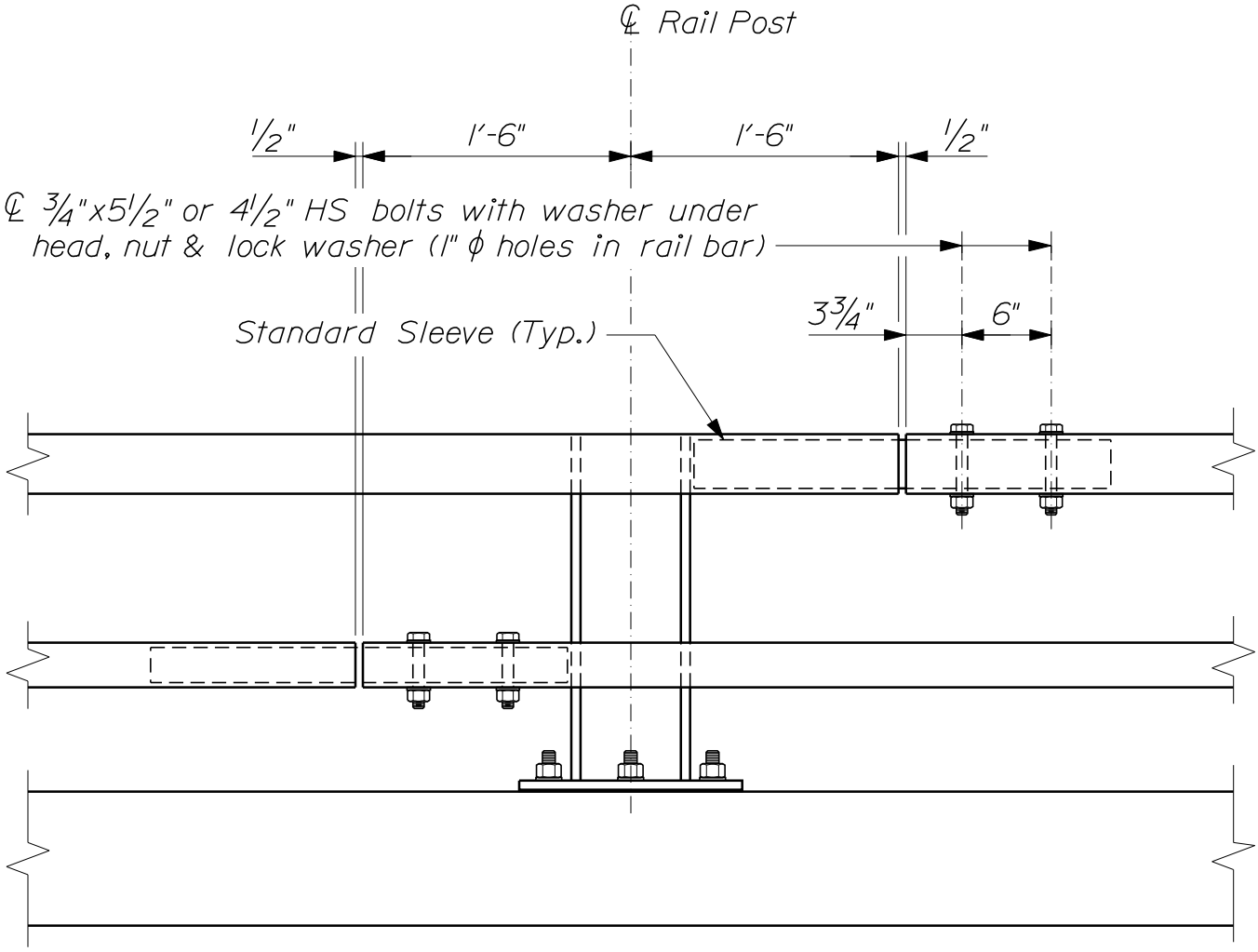

~ STANDARD SPLICE ELEVATION ~

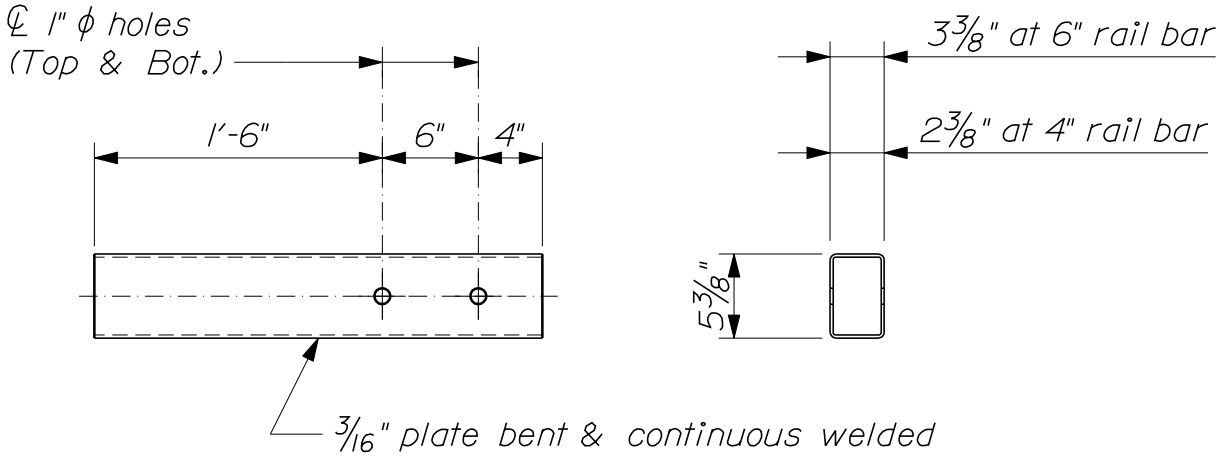

~ STANDARD SLEEVE DETAILS ~

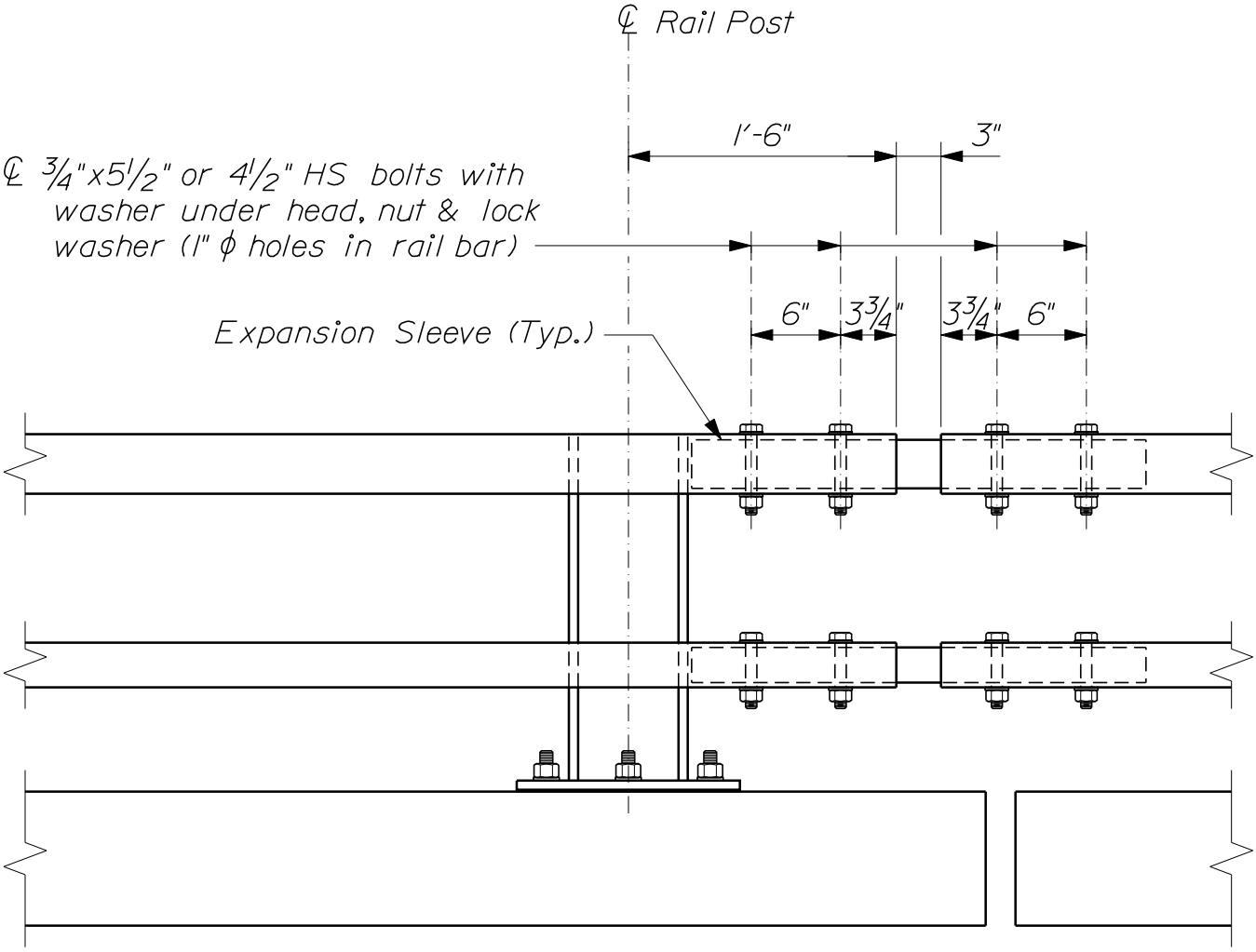

~ EXPANSION SPLICE ELEVATION ~

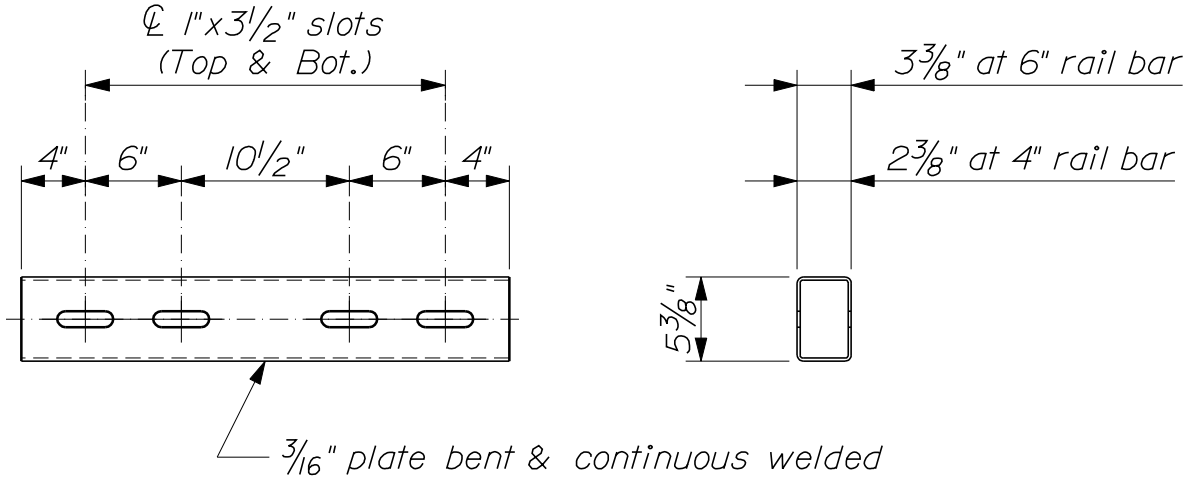

~ EXPANSION SLEEVE DETAILS ~

NOTES:

1. All work and materials shall conform to the provisions of Section 507 - Railings of the Standard Specifications.

2. Tubing shall meet the longitudinal CVN requirements of 15 ft. lb. at 0 °F. or proportional values of sub - size specimens. Testing shall be done in accordance with ASTM A 673. The "H" frequency shall be used and the material shall be as - rolled.

3. Twenty - five percent of the post - to - base welds in a production lot shall be tested by the Magnetic Particle Method. If rejectable discontinuities are found, another twenty - five percent of that production lot shall be tested. If rejectable discontinuities are found in the second twenty - five percent, all post - to - base welds in that lot shall be tested. Acceptance criteria shall be in accordance with the latest edition of the AWS D1.5 Bridge Welding Code.

4. All exposed cut or sheared edges shall be broken and free of burrs.

5. Rail posts shall be set normal to grade unless otnerwise shown.

6. Post base plates shall be flat after fabrication.

7. Lengths of rail bar shall be attached to a minimum of 2 rail posts and to at least 4 posts whenever possible.

8. Rail bars shall not be shop spliced.

9. Rail bar expansion splices shall be provided in any bay spanning a superstructure expansion joint. Expansion joint width shall be 3 inches at 45 °F.

10. All parts shall be galvanized after fabrication in accordance with ASTM A 123, except that hardware shall meet the requirements of either ASTM A 153 or ASTM B 695, Class 50, Type I. Parts except hardware to be galvanized shall be blast cleaned prior to galvanizing in accordance with SSPC - SP6.

11. Drilled venting and pick - up holes shall be shown on the shop drawings. Place vent holes on the underside of the rail memebers as installed.

12. Anchor bolts shall be set with a template. Nuts securing the post base plate shall be tightened to a snug fit and give an additional 1/8 turn.

13. After installation of the rail bars, the exposed rail bolt threads shall receive two coats of zinc - rich paint.

(Continued)

NOTES (Continued):

14. If there is a conflict between these Standard Details and the Design Drawings, the requirements of the Design Drawings shall be followed.

MATERIALS:

Rail Bars	ASTM A 500, Grade B
Rail Post Plates & Bases	ASTM A 709, Grade 36
Rail Bar Splice Sleeves	ASTM A 709, Grade 36
Anchor & Reinforcement Assemblies	ASTM A 36
Plate Washers	ASTM A 36
Anchor Bolts	ASTM A 325, ASTM A 449, or ASTM F 1554, Grade 105
Rail Bolts	ASTM A 36
Nuts for Rail Bolts	ASTM A 563
Splice Bolts	ASTM A 325
Lock Washers	ANSI/ASME B18.21.1-1994

SPECIAL PROVISION
SECTION 511
COFFERDAMS

Section 511 is deleted in its entirety and replaced with the following:

511.01 Description: This work shall consist of the complete design, construction, maintenance and removal of cofferdams and other related work, including dewatering and inspection, required to allow for the excavation of foundation units, to permit and protect the construction of bridge or other structural units and to protect adjacent Roadways, embankments or other structural units, in accordance with the Contract.

511.02 Materials: As specified in the cofferdam Working Drawings.

511.03 Cofferdam Construction:

A. Working Drawings. The Contractor shall submit Working Drawings, showing the materials to be used and the proposed method of construction of cofferdams to the Department. Construction shall not start on cofferdams until such Working Drawings have been submitted. Any review of or comment on, or any lack of review of or comment on, these Working Drawings by the Department shall not result in any liability upon the Department and it shall not relieve the Contractor of the responsibility for the satisfactory functioning of the cofferdam.

B. Construction. Construct cofferdams in conformance with the submitted Working Drawings. Cofferdams shall, in general, be carried below the elevation of the bottom of footings to adequate depths to ensure stability and adequate heights to seal off water. Cofferdams shall be braced to withstand pressure without buckling, secured in place to prevent tipping or movement and be as watertight as necessary for the safe and proper construction of the substructure Work inside them. With the exception of construction of a concrete foundation seal placed under water, the interior dimensions of cofferdams shall provide sufficient clearance for the construction and inspection of forms and to permit pumping outside of forms. The Contractor shall be responsible for the righting and resetting of cofferdams that have tilted or moved laterally, as required for construction.

During the placing and curing of seal concrete, maintain the water level inside the cofferdam at the same level as the water outside the cofferdam, to prevent flow through the concrete.

No timber or bracing shall be used in cofferdams in such a way as to remain in the substructure Work.

Cofferdams shall be constructed to protect fresh concrete against damage from the sudden rising of the water body, to prevent damage by erosion and to prevent damage to adjacent Roadways, embankments or other structural units.

Unless otherwise noted, cofferdams, including all sheeting and bracing involved, shall be removed after the completion of the substructure Work in a manner that prevents disturbance or injury to the finished Work.

Cofferdams shall be constructed, dewatered and removed in accordance with the requirements of Section 656 - Temporary Soil Erosion and Water Pollution Control and related Special Provisions.

C. Inspection of Seal Cofferdams. Seal cofferdam excavations shall initially be inspected and approved by the Contractor.

For each seal cofferdam excavation, the Contractor shall submit a written procedure to the Resident for sediment/overburden removal and excavation inspection. For cofferdams where seal concrete is to be placed on bedrock, the inspection procedure shall describe the Contractor's final cleaning and inspection process for attaining cleanliness of each cofferdam excavation. For cofferdams where seal concrete is not excavated to bedrock, the procedure shall describe the Contractor's final cleaning and inspection process for attaining the bottom of seal elevation shown on the Plans.

The Contractor shall notify the Resident at least 48 hours prior to when each seal cofferdam excavation will be ready for final inspection by the Department. The Contractor shall allow adequate time for each occurrence of cofferdam excavation inspection by the Department. The Contractor shall provide and maintain access and equipment, such as steel probes, for the Resident and/or the Department's Dive Team to independently inspect each cofferdam excavation.

No seal concrete placement shall begin until the Department has approved the cofferdam excavation.

511.04 Pumping: Pumping from the interior of any cofferdam shall be done in such a manner as to prevent any current of water that would carry away or segregate the concrete.

Pumping to dewater a sealed cofferdam shall not commence until the seal concrete has set sufficiently to withstand the hydrostatic pressure and meets the following minimum curing time, after the completion of the installation of the seal concrete:

1. When the temperature of the water body outside the cofferdam is greater than 40°F, a minimum of 5 days.
2. When the temperature of the water body outside the cofferdam is less than 40°F, a minimum of 7 days.

Procedures for the removal of all water and materials from cofferdams shall be described in the Soil Erosion and Water Pollution Control Plan as required in Section

656 Temporary Soil Erosion and Water Pollution Control and related Special Provisions.

511.05 Method of Measurement: Cofferdams will be measured as one lump sum unit, as indicated on the Plans or called for in the Contract.

511.06 Basis of Payment: The accepted quantity of cofferdam will be paid for at the Contract lump sum price for the respective cofferdam items, which price shall be full compensation for design, construction, maintenance, inspection and removal.

When required, the elevation of the bottom of the footing of any substructure unit may be lowered, without change in the price to be paid for cofferdams. However, if the average elevation of more than 25% of the area of the excavation is more than 3 feet below the elevation shown on the Plans, and if requested by the Contractor, then the additional costs incurred that are included in the cofferdam Pay Item will be paid for in accordance with Section 109.7 - Equitable Adjustments to Compensation. The Contractor shall immediately notify the Department when these additional costs commence. Failure of the Contractor to provide this notification will result in undocumented additional work that will be non-reimbursable. The Department will evaluate this additional work to determine an appropriate time extension, if warranted.

All costs for sedimentation control practices, including, but not limited to, constructing, maintaining, and removing sedimentation control structures, and pumping or transporting water and other materials for sedimentation control will not be paid for directly, but will be considered incidental to the cofferdam Pay Item(s).

All costs for related temporary soil erosion and water pollution controls, including inspection and maintenance, will not be paid for directly, but will be considered incidental to the cofferdam Pay Item(s).

All costs associated with preparation of Working Drawings, design calculations, written procedure for sediment/overburden removal and excavation inspection, and the inspection of the seal cofferdam excavation shall be considered incidental to the cofferdam Pay Item(s). There shall be no additional payment for repeated inspection by the Department of the same cofferdam excavation.

All costs for cofferdams and related temporary soil erosion and water pollution controls, including inspection and maintenance, will be considered incidental to related Pay Items, when a specific Pay Item for cofferdams is not included in the Contract.

Seal concrete will be evaluated under Section 502.

Payment will be made under:

Pay Item:	Pay Unit
511.07 Cofferdam	Lump Sum

SPECIAL PROVISION
Section 512
French Drains

512.01 Description This work shall consist of excavating trenches as shown on the plans and sections, furnishing, placing and compacting stone and Geotextile for French Drains in accordance with these specifications and in reasonably close conformity with the lines and grades shown in the Plans.

512.02 Materials Materials shall meet the requirements of the following Sections of Division 700 – Materials.

Stone for French Drains	703.24
Erosion Control Geotextile	722.03 (Class 1)

512.03 Drains Stones shall be placed as shown on the Plans. Stones shall form a box section 2 feet wide and 2 feet high for the entire length of the drains. Erosion Control Geotextile shall be installed to separate the stone box section from the surrounding soil. Installation of the Erosion Control Geotextile shall be in accordance with Section 620-Geotextiles. Gravel will not be required surrounding the French Drains.

512.04 Method of Measurement French Drains will be measured by the linear foot, satisfactorily placed and accepted.

Excavation for French Drains will be incidental to this Item.

512.05 Basis of Payment French Drains will be paid for at the contract unit price, complete in place.

Payment will be made under:

Pay Item	Pay Unit
512.08 French Drains	Linear Foot

SPECIAL PROVISION
SECTION 526
CONCRETE BARRIER

The last paragraph of Subsection 526.05, Basis of Payment is revised by the addition of the following:

Pay Item		Pay Unit
526.3401	Permanent Concrete Transition Barrier - Modified	EA

May 13, 2008
Supercedes June 24, 2004

SPECIAL PROVISION
SECTION 526
CONCRETE BARRIER
(Temporary Concrete Barrier)

Materials

Temporary concrete barriers must be connected in accordance with Standard Detail 526(02) except as indicated below:

The top of the rod may be hooked over the top connector instead of using the hex nut and washer.

SPECIAL PROVISION
SECTION 606
GUARDRAIL

606.01 Description This work shall consist of furnishing and installing guardrail components in accordance with these specifications and in reasonably close conformity with the lines and grades shown on the plans or as established. The types of guardrail are designated as follows:

Type 3-Galvanized steel "w" beam, wood posts or galvanized steel posts.
Type 3a-Galvanized steel "w" beam, wood posts, wood or composite offset blocks.
Type 3aa-Corrosion resistant steel "w" beam, wood posts, wood or composite offset blocks.
Type 3b-Galvanized steel "w" beam, galvanized steel posts, galvanized steel offset blocks.
Type 3c-Galvanized steel "w" beam, wood posts or galvanized steel posts, wood or composite offset blocks.
Type 3d-Galvanized steel "w" beam, galvanized steel posts, wood or composite offset blocks.
Thrie Beam-Galvanized steel thrie beam, wood posts or galvanized steel posts, wood or composite offset blocks.

Median barriers shall consist of two beams of the above types, mounted on single posts. Except for thrie beam, median barriers may include rub rails when called for.

Bridge mounted guardrail shall consist of furnishing all labor, materials, and equipment necessary to install guardrail as shown on the plans. This work shall also include drilling for and installation of offset blocks if specified, and incidental hardware necessary for satisfactory completion of the work.

Remove and Reset and Remove, Modify, and Reset guardrail shall consist of removing the existing designated guardrail and resetting in a new location as shown on the plans or directed by the Resident. Remove, Modify, and Reset guardrail and Modify guardrail include the following guardrail modifications: Removing plate washers at all posts, except at anchorage assemblies as noted on the Standard Details, Adding offset blocks, and other modifications as listed in the Construction Notes or General Notes. Modifications shall conform to the guardrail Standard Details.

Bridge Connection shall consist of the installation and attachment of beam guardrail to the existing bridge. This work shall consist of constructing a concrete end post or modifying an existing endpost as required, furnishing, and installing a terminal connector, necessary hardware, and incidentals required to complete the work as shown on the plans. Bridge Transition shall consist of a bridge connection and furnishing and installing guardrail components as shown in the Standard Details.

606.02 Materials Materials shall meet the requirements specified in the following Sections of Division 700 - Materials:

Timber Preservative	708.05
Metal Beam Rail	710.04
Guardrail Posts	710.07
Guardrail Hardware	710.08

Guardrail components shall meet the applicable standards of "A Guide to Standardized Highway Barrier Hardware" prepared and approved by the AASHTO-AGC-ARTBA Joint Cooperative Committee, Task Force 13 Report.

Posts for underdrain delineators shall be “U” channel steel, 2.44m [8 ft] long, 3.72 kg/m [2 ½ lb/ft] minimum and have 9.5 mm [3/8 in] round holes, 25 mm [1 in] center to center for a minimum distance of 610 mm [2 ft] from the top of the post.

Reflectorized Flexible Guardrail Markers shall be mounted on all guardrails. A marker shall be mounted onto guardrail posts at the flared end treatment’s terminal and its tangent point, both at the leading and trailing ends of each run of guardrail. The marker’s flexible posts shall be grey with either silver-white or yellow reflectors (to match the edge line striping) at the tangents, red at leading ends, and green at trailing ends. Whenever the end treatment is not flared, markers will only be required at the end treatment’s terminal. These shall be red or green as appropriate. Markers shall be installed on the protected side of guardrail posts unless otherwise approved by the Resident. Reflectorized flexible guardrail markers shall be from the Maine DOT’s Approved Product List of Guardrail Material. The marker shall be grey, flexible, durable, and of a non-discoloring material to which 75 mm [3 in] by 225 mm [9 in] reflectors shall be applied, and capable of recovering from repeated impacts. Reflective material shall meet the requirements of Section 719.01 for ASTM D 4956 Type III reflective sheeting. The marker shall be secured to the guardrail post with two fasteners, as shown in the Standard Details.

Reflectorized beam guardrail (“butterfly”-type) delineators shall be mounted on all “w”-beam guardrail. The delineators shall be mounted within the guardrail beam at guardrail posts. Delineators shall be fabricated from high-impact, ultraviolet & weather resistant thermoplastic. Reflectorized beam guardrail delineators shall be placed at approximately 20 m [62.5 ft] intervals or every tenth post on tangents and at approximately 10 m [31.25 ft] intervals or every fifth post on curves. Exact locations of the delineators shall be as directed by the Resident. On divided highways, the left hand delineators shall be yellow and the right hand delineators shall be silver/white. On two directional highways, the right hand side shall be silver/white and no reflectorized delineator used on the left. All reflectors shall have reflective sheeting applied to only one side of the delineator facing the direction of traffic as shown in the Standard Detail 606(07). Reflectorized sheeting for guardrail delineators shall meet the requirements of Section 719.01.

Single wood post shall be of cedar, white oak, or tamarack, well seasoned, straight, and sound and have been cut from live trees. The outer and inner bark shall be removed and all knots trimmed flush with the surface of the post. Posts shall be uniform taper and free of kinks and bends.

Single steel post shall conform to the requirements of Section 710.07 b.

Single steel pipe post shall be galvanized, seamless steel pipe conforming to the requirements of ASTM A120, Schedule No. 40, Standard Weight.

Acceptable multiple mailbox assemblies shall be listed on the Department’s Approved Products List and shall be NCHRP 350 tested and approved.

The Guardrail 350 Flared Terminal shall be a terminal with a 1.2 m [4 ft] offset as shown in the Manufacturer's installation instructions.

Existing materials damaged or lost during adjusting, removing and resetting, or removing, modifying, and resetting, shall be replaced by the Contractor without additional compensation. Existing guardrail posts and guardrail beams found to be unfit for reuse shall be replaced when directed by the Resident.

606.03 Posts Posts for guardrail shall be set plumb in holes or they may be driven if suitable driving equipment is used to prevent battering and distorting the post. When posts are driven through pavement, the damaged area around the post shall be repaired with approved bituminous patching. Damage to lighting and signal conduit and conductors shall be repaired by the Contractor.

When set in holes, posts shall be on a stable foundation and the space around the posts, backfilled in layers with suitable material, thoroughly tamped.

The reflectorized flexible guardrail markers shall be set plumb with the reflective surface facing the oncoming traffic. Markers shall be installed on the protected side of guardrail posts. Markers, which become bent or otherwise damaged, shall be removed and replaced with new markers.

Single wood posts shall be set plumb in holes and backfilled in layers with suitable material, thoroughly tamped. The Resident will designate the elevation and shape of the top. The posts, that are not pressure treated, shall be painted two coats of good quality oil base exterior house paint.

Single steel posts shall be set plumb in holes as specified for single wood posts or they may be driven if suitable driving equipment is used to prevent battering and distorting the post.

Additional bolt holes required in existing posts shall be drilled or punched, but the size of the holes shall not exceed the dimensions given in the Standard Details. Metal around the holes shall be thoroughly cleaned and painted with two coats of approved aluminum rust resistant paint. Holes shall not be burned.

606.04 Rails Brackets and fittings shall be placed and fastened as shown on the plans. Rail beams shall be erected and aligned to provide a smooth, continuous barrier. Beams shall be lapped with the exposed end away from approaching traffic.

End assemblies shall be installed as shown on the plans and shall be securely attached to the rail section and end post.

All bolts shall be of sufficient length to extend beyond the nuts but not more than 13 mm [½ in]. Nuts shall be drawn tight.

Additional bolt holes required in existing beams shall be drilled or punched, but the size of the holes shall not exceed the dimensions given in the Standard Details. Metal around the holes shall be thoroughly cleaned and painted with two coats of approved aluminum rust resistant paint. Holes shall not be burned.

606.045 Offset Blocks The same offset block material is to be provided for the entire project unless otherwise specified.

606.05 Shoulder Widening At designated locations the existing shoulder of the roadway shall be widened as shown on the plans. All grading, paving, seeding, and other necessary work shall be in accordance with the Specifications for the type work being done.

606.06 Mail Box Post Single wood post shall be installed at the designated location for the support of the mailbox. The multiple mailbox assemblies shall be installed at the designated location in accordance with the Standard Details and as recommended by the Manufacturer. Attachment of the mailbox to the post will be the responsibility of the home or business owner.

606.07 Abraded Surfaces All galvanized surfaces of new guardrail and posts, which have been abraded so that the base metal is exposed, and the threaded portions of all fittings and fasteners and cut ends of bolts shall be cleaned and painted with two coats of approved rust resistant paint.

606.08 Method of Measurement Guardrail will be measured by the meter [linear foot] from center to center of end posts along the gradient of the rail except where end connections are made to masonry or steel structures, in which case measurement will be as shown on the plans.

Terminal section, low volume end, NCHRP 350 end treatments, reflectorized flexible guardrail marker, terminal end, bridge transition, bridge connection, multiple mailbox post, and single post will be measured by each unit of the kind specified and installed.

Widened shoulder will be measured as a unit of grading within the limits shown on the plans.

Excavation in solid rock for placement of posts will be measured by the cubic meter [cubic yard] determined from the actual depth of the hole and a hypothetical circle diameter of 600 mm [2 ft].

606.09 Basis of Payment The accepted quantities of guardrail will be paid for at the contract unit price per meter [linear foot] for the type specified, complete in place. Reflectorized beam guardrail (“butterfly”-type) delineators will not be paid for directly, but will be considered incidental to guardrail items. Terminal section, buffer end, NCHRP 350 end treatment, bridge connection, single post and reflectorized flexible guardrail markers will be paid for at the contract unit price each for the kind specified complete in place.

NCHRP 350 end treatments and low volume guardrail ends will be paid for at the contract price each, complete in place which price shall be full payment for furnishing and installing all components including the terminal section, posts, offset blocks, "w" beam, cable foundation posts, plates and for all incidentals necessary to complete the installation within the limits as shown on the Standard Details or the Manufacturer’s installation instructions. Each end treatment will be clearly marked with the manufacturers name and model number to facilitate any future needed repair. Such payment shall also be full compensation for furnishing all material, excavating, backfilling holes, assembling, and all incidentals necessary to complete the work, except that for excavation for posts or anchorages in solid ledge rock, payment will be made under Pay Item 206.07. Type III Retroreflective Adhesive Sheeting

shall be applied to the approach buffer end sections and sized to substantially cover the end section. On all roadways, the ends shall be marked with alternating black and retroreflective yellow stripes. The stripes shall be 75 mm [3 in] wide and sloped down at an angle of 45 degrees toward the side on which traffic is to pass the end section. Guardrail 350 flared terminal shall also include a set of installation drawings supplied to the Resident.

Anchorages to bridge end posts will be part of the bridge work. Connections thereto will be considered included in the unit bid price for guardrail.

Guardrail to be placed on a radius of curvature of 45 m [150 ft] or less will be paid for under the designated radius pay item for the type guardrail being placed.

Widened shoulder will be paid for at the contract unit price each complete in place and will be full compensation for furnishing and placing, grading and compaction of aggregate subbase and any required fill material.

Adjust guardrail will be paid for at the contract unit price per meter and will be full compensation for adjusting to grade. Payment shall also include adjusting terminal end treatments where required.

Modify guardrail will be paid for at the contract unit price per meter and will be full compensation for furnishing and installing offset blocks, additional posts, and other specified modifications; removing, modifying, installing, and adjusting to grade existing posts and beams; removing plate washers and backup plates, and all incidentals necessary to complete the work. Payment shall also include removing and resetting terminal ends where required.

Remove and Reset guardrail will be paid for at the contract unit price per meter and will be full compensation for removing, transporting, storing, reassembling all parts, necessary cutting, furnishing new parts when necessary, reinstalling at the new location, and all other incidentals necessary to complete the work. Payment shall also include removing and resetting terminal ends when required. No payment will be made for guardrail removed, but not reset and all costs for such removal shall be considered incidental to the various contract pay items.

Remove, Modify, and Reset guardrail will be paid for at the contract unit price per meter and will be full compensation for the requirements listed in Modify guardrail and Remove and Reset guardrail.

Bridge Connections will be paid for at the contract unit price each. Payment shall include, attaching the connection to the endpost including furnishing and placing concrete and reinforcing steel necessary to construct new endposts if required, furnishing and installing the terminal connector, and all miscellaneous hardware, labor, equipment, and incidentals necessary to complete the work.

Bridge Transitions will be paid for at the contract unit price each. Payment shall include furnishing and installing the thrie beam or “w”-beam terminal connector, doubled beam section, and transition section, where called for, posts, hardware, precast concrete transition curb, and any other necessary materials and labor, including the bridge connection as stated in the previous paragraph.

Payment will be made under:

	Pay Item	Pay Unit
606.15	Guardrail Type 3a-Single Rail	meter [Linear Foot]
606.151	Guardrail Type 3aa-Single Rail	meter [Linear Foot]
606.17	Guardrail Type 3b-Single Rail	meter [Linear Foot]
606.1721	Bridge Transition - Type I	Each
606.1722	Bridge Transition - Type II	Each
606.1731	Bridge Connection - Type I	Each
606.1732	Bridge Connection - Type II	Each
606.178	Guardrail Beam	meter [Linear foot]
606.18	Guardrail Type 3b - Double Rail	meter [Linear foot]
606.19	Guardrail Type 3a - 4.5 m [15 ft] radius and less	meter [Linear Foot]
606.191	Guardrail Type 3aa - 4.5 m [15 ft] radius and less	meter [Linear Foot]
606.20	Guardrail Type 3a - over 4.5 m [15 ft] radius	meter [Linear Foot]
606.201	Guardrail Type 3aa - over 4.5 m [15 ft] radius	meter [Linear Foot]
606.21	Guardrail Type 3b - 4.5 m [15 ft] radius and less	meter [Linear Foot]
606.22	Guardrail Type 3b - over 4.5 m [15 ft] radius	meter [Linear Foot]
606.23	Guardrail Type 3c - Single Rail	meter [Linear Foot]
606.2301	Guardrail Type 3c - Double Rail	meter [Linear Foot]
606.231	Guardrail Type 3c - 4.5 m [15 ft] radius and less	meter [Linear Foot]
606.232	Guardrail Type 3c - over 4.5 m [15 ft] radius	meter [Linear Foot]
606.24	Guardrail Type 3d - Single Rail	meter [Linear Foot]
606.2401	Guardrail Type 3d - Double Rail	meter [Linear Foot]
606.241	Guardrail Type 3d - 4.5 m [15 ft] radius and less	meter [Linear Foot]
606.242	Guardrail Type 3d - over 4.5 m [15 feet] radius	meter [Linear Foot]
606.25	Terminal Connector	Each
606.257	Terminal Connector - Thrie Beam	Each
606.265	Terminal End-Single Rail - Galvanized Steel	Each
606.266	Terminal End-Single Rail - Corrosion Resistant Steel	Each
606.275	Terminal End-Double Rail - Galvanized Steel	Each
606.276	Terminal End-Double Rail - Corrosion Resistant Steel	Each
606.353	Reflectorized Flexible Guardrail Marker	Each
606.354	Remove and Reset Reflectorized Flexible Guardrail Marker	Each
606.356	Underdrain Delineator Post	Each
606.358	Guardrail, Modify, Type 3b to 3c	meter [Linear Foot]
606.3581	Guardrail, Modify Existing to Type 3d	meter [Linear Foot]
606.362	Guardrail, Adjust	meter [Linear Foot]
606.365	Guardrail, Remove, Modify, and Reset, Type 3b to 3c	meter [Linear Foot]
606.3651	Guardrail, Remove, Modify, and Reset Existing to Type 3d	meter [Linear Foot]
606.366	Guardrail, Removed and Reset, Type 3c	meter [Linear Foot]
606.367	Replace Unusable Existing Guardrail Posts	Each
606.47	Single Wood Post	Each
606.48	Single Galvanized Steel Post	Each
606.50	Single Steel Pipe Post	Each

606.51	Multiple Mailbox Support	Each
606.55	Guardrail Type 3 - Single Rail	meter [Linear Foot]
606.551	Guardrail Type 3 - Single Rail with Rub Rail	meter [Linear Foot]
606.56	Guardrail Type 3 - Double Rail	meter [Linear Foot]
606.561	Guardrail Type 3 - Double Rail with Rub Rail	meter [Linear Foot]
606.568	Guardrail, Modify Type 3c -Double Rail	meter [Linear Foot]
606.59	Guardrail Type 3 - 4.5 m [15 ft] radius and less	meter [Linear Foot]
606.60	Guardrail Type 3 - over 4.5 m [15 ft] radius	meter [Linear Foot]
606.63	Thrie Beam Rail Beam	meter [Linear Foot]
606.64	Guardrail Thrie Beam - Double Rail	meter [Linear Foot]
606.65	Guardrail Thrie Beam - Single Rail	meter [Linear Foot]
606.66	Terminal End Thrie Beam	Each
606.70	Transition Section - Thrie Beam	Each
606.71	Guardrail Thrie Beam - 4.5 m [15 ft] radius and less	meter [Linear Foot]
606.72	Guardrail Thrie Beam - over 4.5 m [15 ft] radius	meter [Linear Foot]
606.73	Guardrail Thrie Beam - Single Rail Bridge Mounted	meter [Linear Foot]
606.74	Guardrail Type 3 - Single Rail Bridge Mounted	meter [Linear Foot]
606.753	Widen Shoulder for Low Volume Guardrail End - Type 3	Each
606.754	Widen Shoulder for Guardrail 350 Flared Terminal	Each
606.78	Low Volume Guardrail End - Type 3	Each
606.79	Guardrail 350 Flared Terminal	Each

1. Reflectorized Flexible Guardrail Markers shall be from Maine DOT's Approved Product List of Guardrail Material.

2. Installation:
   a. Each bolt-hole diameter shall be the bolt diameter + 1/16".
   b. Wood post attachment - attach marker with 2, 5/16" diameter zinc-coated lag bolts, having 2" of embedment into wood post.
   c. Steel post attachment - attach marker with 2, 1/4" diameter zinc-coated bolt, washer and nut assemblies, having 1/2" of bolt extension behind steel post.
   d. When provided by the marker manufacturer, a stiffening pipe shall be inserted into the base of the marker prior to drilling bolt holes and shall remain in-place.

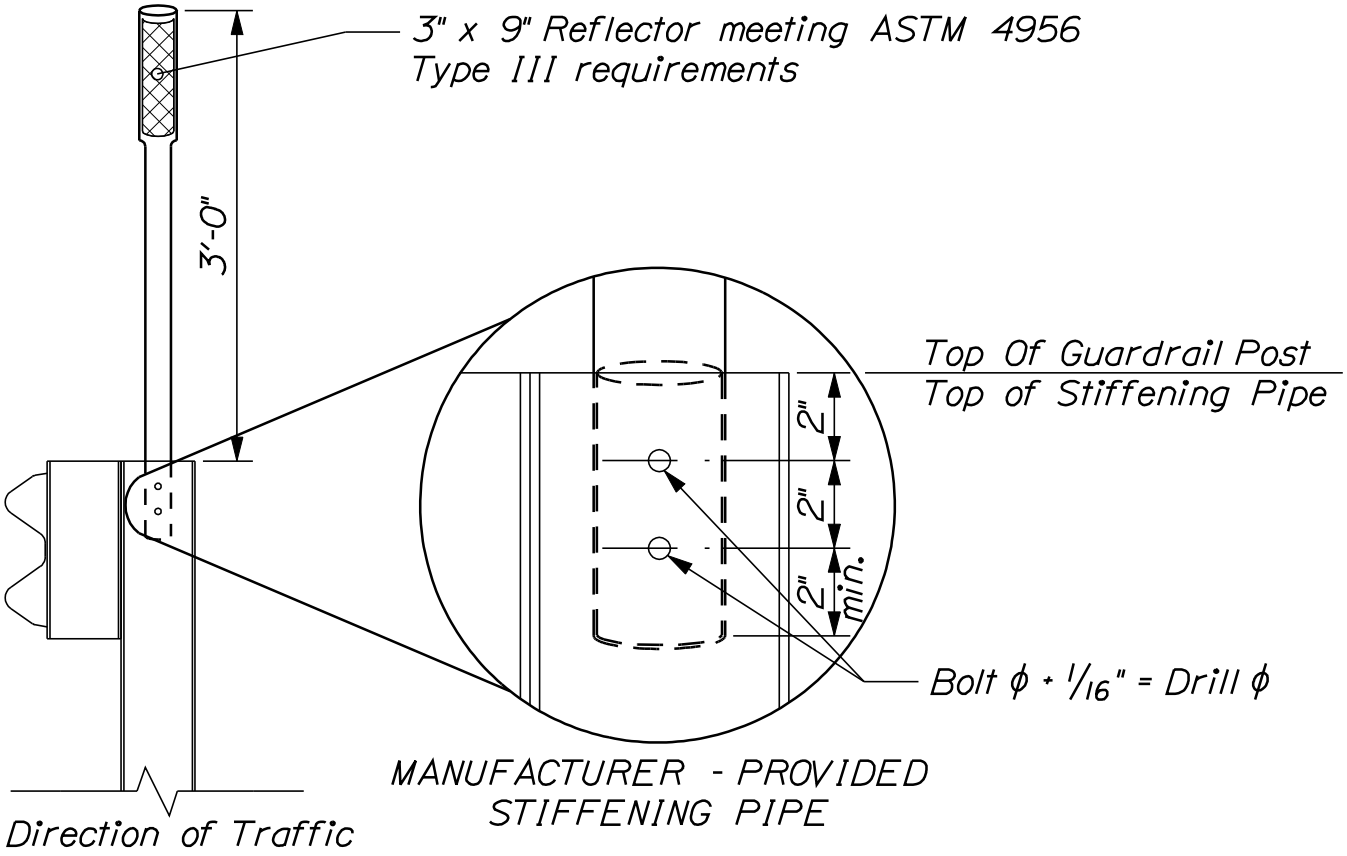

REFLECTORIZED FLEXIBLE GUARDRAIL MARKER DETAILS

606(34)

SPECIAL PROVISION
SECTION 610
(Barrier Boulders)

Description

The work covered by this section includes furnishing all labor, materials, equipment and incidentals for installation of weathered fieldstone boulders in locations shown on the plans or as directed by the MaineDOT Resident Engineer or Landscape Architect.

Submittals

(a) Submit a source location and photographs of (3) sample fieldstone boulders to the MaineDOT landscape architect for approval. The landscape architect shall be available at the request of the contractor to inspect and approve fieldstone boulders.

Materials

1. Fieldstone Barrier Boulders shall be non-angular, natural looking, weathered and gray in color with minimum 3-4' in any dimension and maximum 5' in any dimension.

Construction

All fieldstone boulders shall be delivered, handled and placed to prevent scraping or other damage to their appearance.

(a) Fieldstone boulders shall be set so as to be stable and the base is slightly below final grade with maximum vertical faces exposed.

(b) Fieldstone boulder shall be set as directed by the MaineDOT resident engineer or landscape architect.

Method of Measurement

Fieldstone boulder slabs will be measured and accepted in place.

Basis of Payment

Payment will be made under the following items:

Pay Item		**Pay Unit**
610.60	Barrier Boulder	each

SPECIAL PROVISIONS
SECTION 618
SEEDING
(Special Seeding Mix)

618.01 Description: This section has been amended to include the following:

This work shall consist of the furnishing of all materials for, and installation of, using Seeding Method Number 2 from MaineDOT Standard Specifications, Special Seeding Mix in accordance with this specification.

The Special Seed Mix shall be used on the open slope portions of this project, providing species selected for their drought and salt resistance, rapid germination rates, and dense root growth in an effort to establish persistent, durable, native vegetation.

618.02 Materials: This section has been amended to include the following

The Special Seeding Mix shall be composed as follows:

Percentage of Mix	Description
25%	Tall Fescue *(Festuca arundinacea)*
10%	Hard Fescue *(Festuca rubra)*
10%	Annual Ryegrass *(Lolium multiflorum)*
10%	Perennial Ryegrass (*Lolium perenne*)
10%	White Clover (Trifolium repens)
10%	Lupine (*Lupinus perennis*)
5%	Red Top *(Agrostis alba)*
5%	Autumn Bentgrass *(Agrostis perennans)*
5%	Little Blue Stem *(Schizachyrium scoparius)*
5%	Butterfly Weed (*Asclepias tuberosa*)
5%	Aster noviae-angleae (New England Aster)

This mix shall be applied by hydroseeding at the rate of 4 lb per unit (1,000 sq. ft.) as directed by the resident.

618.09 Construction Method:

The Contractor shall follow Construction Method – Seeding Method Number 2

Payment will be made under:

Pay Item		Pay Unit
618.143	Special Seed Mix	Unit

SPECIAL PROVISIONS
SECTION 621
LANDSCAPING

(Plant Species Specification and Quantities List)

The following list of items provides the estimated quantities for use on this project. The scientific name of the plant material is provided along with the common name in parenthesis.

The contractor shall follow MaineDOT Standard Specifications, Section 621 for landscape materials and installation procedures.

The MaineDOT Landscape Architect or his Designee will be available to inspect and stake the location of plant materials at the time of planting.

In accordance with Section 104.5.9, a separate Performance Bond will not be required for the Landscape portion of this contract. A Two-Year Establishment Period will be included in the full amount of plantings beginning at the start of the Establishment Period.

PLANT MATERIALS

ITEM NO	Description	Unit	Quantity	Total
621.032	Evergreen Trees 4’ – 5’ Group B	EA		12
	Picea abies (Norway Spruce)		12	
621.043	Evergreem Trees 6’ – 8’ Group A B&B	EA		18
	Pinus strobus (Eastern White Pine)		18	
621.044	Evergreem Trees 6’ – 8’ Group B B&B			6
	Picea abies (Norway Spruce)		6	
621.047	Evergreen Trees 8’ – 9’ Group B B&B			6
	Picea abies (Norway Spruce)		6	
621.101	Plug/Starter Plants 6” – 12” ht. Cont.	EA		500
	Abies balsamea (Balsam Fir)		100	
	Larix decidua (Larch)		100	
	Picea abies (Norway Spruce)		100	
	Pinus strobus (Eastern White Pine)		100	
	Thuja occidentalis (Eastern Cedar)		100	
621.178	Medium Deciduous Trees 6’ – 8’	EA		6
	Betula papyrifera (Paper Birch)		6	
621.273	Large Decid. Trees 2” – 2 ½” cal. Gr. A B&B	EA		9
	Acer saccharum (Sugar Maple)		6	
	Acer rubrum (Swamp Maple)		3	
621.275	Large Decid. Trees 2” – 2 ½” cal. Gr. C B&B	EA		3

	Quercus alba (Northern White Oak)		3	
621.531	Deciduous Shrubs 12” – 18” Group A Cont.	EA		36
	Rubus ‘Heritage’		12	
	Rubus ‘Bristol’		12	
	Rubus odoratus		12	
621.540	Deciduous Shrubs 18” – 24” Gr. A Cont.	EA		36
	Cornus racemosa		12	
	Aronia melanocarpa		12	
	Cornus sericea (Red Osier Dogwood)		12	
621.541	Deciduous Shrubs 18” – 24” Gr. B Cont.	EA		84
	Amelanchier canadensis (Shadblow)		12	
	Myrica pensylvanica (Bayberry)		12	
	Rosa rugosa (Beach Rose)		60	
621.542	Deciduous Shrubs 18” – 24” Gr. C Cont.	EA		24
	Chaenomeles spec. ‘Jet Trail’(White Quince)		12	
	Cornus mas (Cornellian Cherry Dogwood)		12	
621.558	Deciduous Shrubs 4’ – 5’ Gr. A B&B	EA		12
	Syringa vulgaris (Purple Common Lilac)		12	
621.80	Establishment Period	LS	Lump Sum	1
			1	

SPECIAL PROVISION
SECTION 627
PAVEMENT MARKINGS

The last paragraph of Subsection 627.10, Basis of Payment is revised by the addition of the following:

Pay Item		Pay Unit
627.733	4" White or Yellow Painted Pavement Marking Line	LF

SPECIAL PROVISIONS
SECTION 638
BRIDGE LIGHTING
SOLAR NAVIGATION LIGHTING

ALL REQUIREMENTS IN THIS SPECIFICATION ARE THE RESPONSIBILITY OF THE CONTRACTOR UNLESS NOTED OTHERWISE.

Description:

This work shall consist of furnishing and installing all materials and equipment necessary for lighting of the Navigation Channel, as shown on the plans and as directed by the Resident.

Materials:

General. All material furnished by the Contractor shall be new.

A. Navigation Lights.

The contractor shall supply and install navigation lights as shown on the Plans. The solar navigation lights shall be Sealite model SL-BRK – Sectored Bridge Lighting Kit – green and red navigation lights, or equal. The green light signifies the channel center, and the red lights the channel margins. The navigation lights shall have a minimum coverage of one (1) nautical mile.

Two spare navigation lights will be supplied to the Resident for maintenance inventory.

All solar cells for the navigation lights shall be installed on the southern fascia of the bridge, and positioned to maximize exposure to sunlight, and to avoid damage from snow plowing. Wiring for the navigation lights on the northern fascia shall be run through each one inch diameter conduit, as shown on the plans.

B. Navigation Light Mounts.

The Contractor shall submit for review a proposed mounting system of the navigation lights to the superstructure fascia, as shown on the plans. The mounting system shall include a mounting plate, extension arm, anchor rods, bolts, nuts and washers. Unless otherwise specified, the mounting system shall be carbon steel conforming to the requirements of ASTM A36, and galvanized in accordance with Special Provision Section 506.

The navigation lighting system shall hang vertically, as shown on the plans, and shall be able to swing up 190º, allowing the lights to be maintained from the roadway. The navigation lighting system shall have an attached chain used to pull up the navigation light from the roadway surface.

Anchor rods shall meet the requirements of ASTM F 1554, Grade 105 and shall be swedged on the embedded portion of the rod. Anchor rods shall be a minimum diameter of three quarter (3/4) inch, with a minimum embedment length of six (6) inches into the superstructure fascia. Epoxy adhesive used for anchor rods shall be from the Department's Qualified Product List.

Bolts and studs, nuts, and washers shall conform to ASTM A325, Type 1. Hot-dip galvanized bolts and studs including associated nuts and washers in accordance with ASTM A153.

Submittals:

The Contractor shall submit for review a list of equipment and materials proposed for use for the solar navigation lights mounting system, including detail drawings of mounting system. The list shall include the name of the manufacturer, size and identifying number of each item and other necessary data, including detailed scale drawings and wiring diagrams as appropriate. If requested, the Contractor shall submit sample articles of materials proposed for use. Submittals, other than material samples, shall be provided in duplicate. Following checking, correction and approval, two sets of approved detail drawings shall be submitted. The Department will not be liable for material purchased, labor performed, or work delayed before such review. Upon completion of the work, the Contractor shall submit a set of as-built drawings, acceptable to the Department, detailing the materials and equipment used, locations on the structure, and methods of attachment.

Construction:

Installation:

A set of installation drawings shall be submitted to the Resident for approval 10 working days prior to the installation of the navigation lighting for the Navigation Channel. The navigation lights shall be installed according to the manufacture's recommendations and the mounting system shall be installed according to the approved installation drawings.

The epoxy anchors shall be installed per manufacture's installation instructions.

Acceptance:

All systems shall be complete and in operation to the satisfaction of the Resident at the time of acceptance of the work.

Method of Measurement:

Solar Navigation Lighting, satisfactorily supplied, installed and accepted, will be measured for payment by the lump sum.

Basis of Payment:

The accepted quantity of Solar Navigation Lighting will be paid for at the contract lump sum price, which payment shall be full compensation for all labor, materials, equipment and incidentals necessary to complete the work.

Payment will be made under:

Pay Item:		Pay Unit
638.02	Navigation Lights - Solar	Lump Sum

SPECIAL PROVISION
SECTION 641
REST AREA FACILITIES
(Wood Picnic Table Rectangular 8 ft)

Description:

This work shall consist of furnishing and installing all materials and equipment necessary for the assembly, delivery and installation of the Wood Picnic Table, in accordance with these specifications, as shown on the plans, and as directed by the Resident.

Materials:

The installation, handling and storage of all material shall comply with manufacturers instructions and recommendations. All wood edges and corners shall be rounded off.

A. Hardware

All bolts, nuts, washers and other associated hardware shall be Hot-dip galvanized in accordance with ASTM A153. Carriage bolts shall be used to secure the Table and Bench surfaces to the frame, and shall recessed 1/8” below the wood surface.

B. Wood Finish

Two (2) coats of Barn Red Semi-Transparent stain shall be applied. Color Sample shall be furnished to the Resident for approval. Any damage to the wood finish during transportation or installation of the Wood Picnic Table shall be repaired or replaced at cost to the Contractor.

C. Cable Anchor System

The Contractor shall provide and install two (2) cable anchor systems for the Picnic Table. Details and proposed materials for the cable anchor system shall be submitted to the Resident for approval.

Submittals:

Prior to assembly of the Wood Picnic Table, the Contractor shall submit for review all product data, manufacturers specifications, and installation instructions for all items furnished.

Method of Measurement:

The Wood Picnic Table will be measured for payment by Each, complete and in place.

Basis of Payment:

The accepted Wood Picnic Table will be paid for at the contract unit price Each. Payment will be full compensation for the furnishing of all materials, labor and incidentals required for all earthwork, foundations and erection of the Wood Picnic Table, complete and in place.

Payment will be made under:

Pay Item		Pay Unit
641.103	Wood Picnic Table Rectangular 8 ft	Each

SPECIAL PROVISION
SECTION 641
REST AREA FACILITIES
(Kiosk)

Description:

This work shall consist of furnishing and installing all materials and equipment necessary for all earthwork, foundations and erection of the Kiosk, in accordance with these specifications, as shown on the plans, and as directed by the Resident.

Materials:

A. Metal Roofing

Metal roofing material shall have a flat profile and be 24 gauge conforming to ASTM A792 Grade 33, shall be a snap lock type standing seam, and shall be Slate Gray in color. Color sample shall be furnished to the Resident for approval.

B. Hardware

All bolts, nuts, washers and other associated hardware shall be Hot-dip galvanized in accordance with ASTM A153.

C. Wood Finish

Two coats of “Mission Brown” Cabot Semi-solid stain or approved equal shall be applied. Color sample shall be furnished to the Resident for approval.

D. Stone Dust Floor Area

A rectangular shaped stone dust surface course shall be placed covering the entire area underneath the Kiosk, 3” deep and installed over a 6” deep layer of compacted gravel base. The gravel base shall meet the requirements for Aggregate Subbase Course Gravel, Type D. The Stone Dust Surface Course shall be mechanically compacted.

Submittals

Prior to erection of the Kiosk, the Contractor shall submit for review all manufacturers specifications, product data, and installation instructions for all items furnished.

Method of Measurement

Kiosk will be measured for payment by Each, complete and in place.

Basis of Payment

The accepted Kiosk will be paid for at the contract unit price Each. Payment will be full compensation for the furnishing of all materials, labor and incidentals required for all earthwork, foundations and erection of the Kiosk, complete and in place.

Payment will be made under:

Pay Item		Pay Unit
641.89	Kiosk	Each

SPECIAL PROVISION
SECTION 641
REST AREA FACILITIES
(Picnic Shelter)

Description:

This work shall consist of furnishing and installing all materials and equipment necessary for all earthwork, foundations and erection of the Picnic Shelter, in accordance with these specifications, as shown on the plans, and as directed by the Resident.

Materials:

A. Metal Roofing

Metal roofing material shall have a flat profile and be 24 gauge conforming to ASTM A792 Grade 33 and shall be Slate Gray in color. Color sample shall be furnished to the Resident for approval.

B. Hardware

All bolts, nuts, washers and other associated hardware shall be Hot-dip galvanized in accordance with ASTM A153.

C. Wood Finish

Two (2) coats of “Mission Brown” Cabot Semi-solid stain or approved equal shall be applied. Color sample shall be furnished to the Resident for approval.

D. Stone Dust Floor Area

A rectangular shaped stone dust surface course shall be placed covering the entire area underneath the Picnic Shelter, 3” deep and installed over a 6” deep layer of compacted gravel base. The gravel base shall meet the requirements for Aggregate Subbase Course Gravel, Type D. The Stone Dust Surface Course shall be mechanically compacted.

Submittals

Prior to erection of the Picnic Shelter, the Contractor shall submit for review all product data, manufacturers specifications, and installation instructions for all items furnished.

Method of Measurement

Picnic shelters will be measured for payment by Each, complete and in place.

Basis of Payment

The accepted Picnic Shelter will be paid for at the contract unit price Each. Payment will be full compensation for the furnishing of all materials, labor and incidentals required for all earthwork, foundations and erection of the shelter, complete and in place.

Payment will be made under:

Pay Item		Pay Unit
641.93	Picnic Shelter	Each

SPECIAL PROVISION
SECTION 645
HIGHWAY SIGNING
(Special Signing)

Description

This work shall consist of furnishing all materials and equipment necessary for the earthwork, fabrication, finishing and installation of the Interpretive Panel base and mounting bracket, as well as the installation of the MaineDOT supplied Interpretive Panel, in accordance with these specifications, as shown on the plans, and as directed by the Resident.

Materials:

A. Earthwork:

Areas around the Interpretive Sign Panel Holder System disturbed during excavation and installation shall be seeded and mulched if the disturbed area is grass, or shall have a 3” uniform layer of erosion control mix if a non-grass area.

The backfill used around the post shall meet the requirements of Granular Borrow, Section 703.19-Material for Embankment Construction. Backfill shall be placed and compacted around the posts, in lifts not to exceed 8”.

B. Mounting Bracket

Mounting Brackets shall be fabricated from 316L Stainless Steel. All steel shall be deburred and smooth to the touch, with no sharp or jagged edges.

C. Hardware

Security nut shall be Bryce Fastener Inc. 3/8” Thread diameter Penta-Nut stainless steel nut or equal.

Wedge anchors shall be ITW Ramset Red head SWW-3826 Wedge Anchor or equal. Holes for wedge anchors shall be field drilled for best fit, using end plates as a template.

Fasteners for securing interpretive sign to backing plate to be supplied by Panel manufacturer (by others).

D. Granite

The granite posts shall be Swenson Granite Works ‘Woodbury’ Granite Post or equal, tight grained and a salt and pepper light gray color. The granite posts shall be from one quarry source to assure consistency of granite color and grain structure. Granite posts shall be set plum, with the tops of both posts level relative to each other and the finished grade. The Contractor shall submit a sample or photograph of the proposed granite for approval.

Submittals

The Contractor shall submit for review: all product data and manufacturer specifications, and installation instructions for all items furnished.

Method of Measurement

Special Signing will be measured for payment by the Lump Sum, complete and in place.

Basis of Payment

The accepted Special Signing will be paid for at the contract Lump Sum price. Payment will be full compensation for the furnishing of all materials, labor and incidentals required for all earthwork, fabrication, finishing and installation of the Interpretive Panel Base, and the installation of the Interpretive Panel, complete and in place.

Payment will be made under

Pay Item		Pay Unit
645.51	Special Signing	Lump Sum

SPECIAL PROVISION
SECTION 652
MAINTENANCE OF TRAFFIC
(Work Zone Traffic Control)

652.1 Description: The following paragraphs are added:

The Contractor shall provide a Traffic Control Plan (TCP) to the Resident, in accordance with Subsection 105.7 of the Standard Specifications. The Contractor shall not commence work in the field until the Department approves the TCP. The Contractor shall provide a Traffic Control Supervisor who will be responsible for providing traffic control management in compliance with the contract and the latest edition of the Manual on Uniform Traffic Control Devices (MUTCD), including supervision of personnel for the installation, inspection and maintenance of all traffic control devices. The Traffic Control Supervisor, or a qualified substitute, shall monitor traffic control details 7 days a week. Work Zone Traffic Control will also include the installation and removal of all temporary pavement markings, as well as the maintenance of all construction signage and channelization devices.

No disruptions to traffic will be allowed before the TCP is reviewed and approved by the Department. The Contractor should allow ten Business Days in his/her schedule for MaineDOT to review and approve the first submission of the TCP after the pre-construction traffic control meeting. If the initial TCP is rejected, the Contractor should allow five Business Days in his/her schedule for the Department to review and approve the second and each successive submission of the TCP after it is resubmitted.

In addition to other TCP Requirements enumerated herein, the TCP shall show all Construction Signs, Detour Route Signs, Speed Signs, Channelization Devices, Work Zone Crash Cushions, Temporary Traffic Signal, and Boater signs.

652.3.4 General Requirements:

Temporary Centerline. A temporary centerline of reflectorized traffic paint or raised pavement markers shall be applied each day as new pavement is to be used by traffic. The temporary centerline shall conform to the standard marking patterns used for permanent markings and will be considered incidental to related contract items. Failure to apply a temporary centerline daily will result in suspension of paving until temporary markings are applied to all previously placed pavement.

652.7 Method of Measurement: This entire Subsection is revised to read:

Work Zone Traffic Control, including the Contractor's Traffic Control Plan, Traffic Control Supervisor, furnishing, installation and maintenance of traffic control devices, will be measured as one lump sum for all work authorized and performed.

652.8 Basis of Payment: This entire Subsection is revised to read:

Work Zone Traffic Control will be paid for at the contract lump sum price. Payment will be full compensation for the Traffic Control Plan, Traffic Control Supervisor, removal of pavement marking, temporary pavement marking lines, removal of temporary pavement markings and restoring the original pavement markings in areas with no new pavement and maintenance thereof. Maintenance of signs includes: replacing devices damaged, lost, or stolen; and cleaning and moving as many times as necessary throughout the life of the contract, regardless whether the work areas or projects are geographically separated or not separated.

The following related work will be paid for under their respective contract bid items if required for the project:

1. Flaggers
2. Temporary Concrete Barrier
3. Work Zone Crash Cushions
4. Construction Signs
5. Temporary Flexible Delineator
6. Drum
7. Cone

Failure by the contractor to follow the Contract 652 Special Provision and/or The Manual of Uniform Traffic Control Devices (MUTCD) will result in a reduction in the payment, computed by reducing the lump sum total by 5% per occurrence. The Resident will provide the Traffic Control Supervisor with a written warning of a possible occurrence. The written warning from the Resident will be date and time stamped. The Contractor shall immediately fix the problem. If the problem(s) is not corrected immediately or repeatedly occurs than an occurrence has taken place and a reduction in payment of the lump sum total of 5% will occur. The Department reserves the right to suspend the work and request a meeting to discuss violations and remedies. There will be no payment for work done under this item after the expiration of contract time.

Payment will be made under:

Pay Item	Pay Unit
652.39 Work Zone Traffic Control	Lump Sum

February 4, 2011
Supersedes February 27, 2003

SPECIAL PROVISION
SECTION 652
MAINTENANCE OF TRAFFIC

Approaches Approach signing shall include the following signs as a minimum. Field conditions may warrant the use of additional signs as determined by the Resident.

Road work Next x Miles
Road work 500 Feet
End Road Work

Work Area At each work site, signs and channelizing devices shall be used as directed by the Resident. Signs include:

Road Work xxxx [1]
One Lane Road Ahead
Flagger Sign

Other typical signs include:

Be Prepared to Stop
Low Shoulder
Bump
Pavement Ends

The above lists of Approach signs and Work Area signs are representative of the contract Requirements. Other sign legends may be required.

The Contractor shall conduct their operations in such a manner that the roadway will not be restricted to one lane for more than 800 m [2,500 ft] at each work area. To encourage quality paving in warm-weather conditions, the length can be extended to 4,000 ft depending on the traffic impacts. Where more than one work area restricts traffic to one lane operation, these work areas shall be separated by at least 1.6 km [1 mile] of two way operation.

Temporary Centerline A temporary centerline shall be placed each day on all new pavement to be used by traffic. The temporary centerline, when specified of reflectorized traffic paint, shall conform to the standard marking patterns used for permanent markings.

Failure to apply a temporary centerline daily will result in a Traffic Control Violation and suspension of paving operations until temporary markers are applied to all previously placed pavement.

[1] "Road Work Ahead" to be used in mobile operations and "Road Work xx ft" to be used in stationary operations as directed by the Resident.

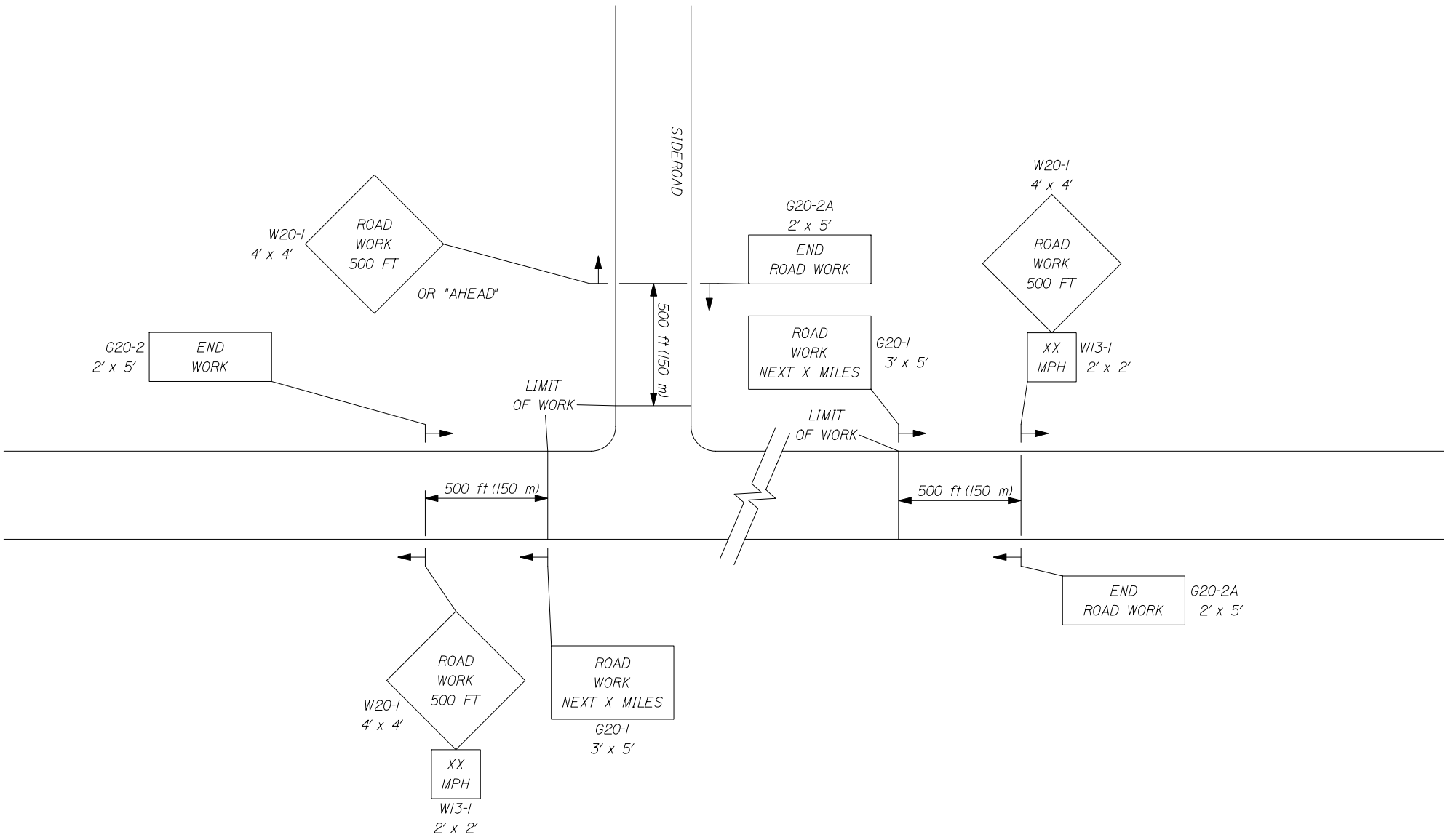

1 of 3

-- PROJECT APPROACH SIGNING --
TWO WAY TRAFFIC

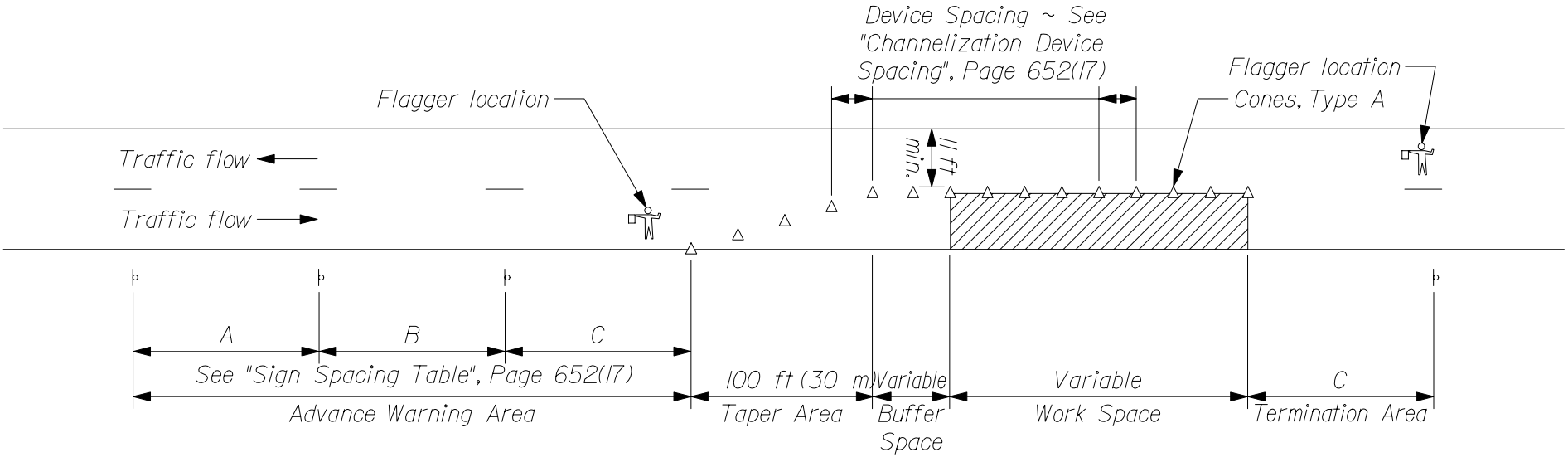

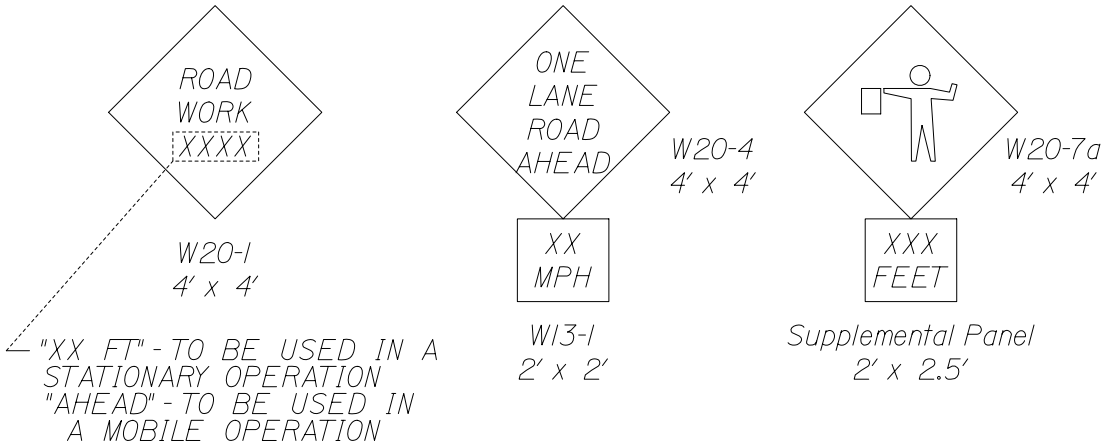

TYPICAL APPLICATION: TWO - WAY, TWO LANE ROADWAY, CLOSING ONE LANE USING FLAGGERS

TYPE OF TAPER	TAPER LENGTH (L)*
Merging Taper	at least L
Shifting Taper	at least 0.5L
Shoulder Taper	at least 0.33L
One-Lane, Two-Way Traffic Taper	100 ft (30 m) maximum
Downstream Taper	100 ft (30 m) per lane

* Formulas for L are as follows:

For speed limits of 40 mph (60 km/h) or less:

$L = \frac{WS^2}{60}$ $\quad (L = \frac{WS^2}{155})$

For speed limits of 45 mph (70 km/h) or greater:

$L = WS$ $\quad (L = \frac{WS}{1.6})$

* Formulas for L are as follows:

A minimum of 5 channelization devices shall be used in the taper.

CHANNELIZATION DEVICE SPACING

The spacing of channelization devices shall not exceed a distance equal to 1.0 times the speed limit in mph when used for taper channelization, and a distance in feet of 2.0 times the speed limit in mph when used for tangent channelization.

SIGN SPACING TABLE			
Road Type	Distance Between Signs**		
	A	B	C
Urban 30 mph (50 km/h) or less	100 (30)	100 (30)	100 (30)
Urban 35 mph (55 km/h) and greater	350 (100)	350 (100)	350 (100)
Rural	500 (150)	500 (150)	500 (150)
Expressway / Urban Parkway	2,640 (800)	1,500 (450)	1000 (300)

**Distances are shown in feet (meters).

GENERAL NOTES;

1. Final placement of signs and devices may be changed to fit field conditions as approved by the Resident.

SUGGESTED BUFFER ZONE LENGTHS

Speed (mph)	Length (feet)	Speed (mph)	Length (feet)
20	115	40	325
25	155	45	360
30	200	50	425
35	250	55	495

April 17, 2007
Supersedes May 10, 2006

SPECIAL PROVISION
SECTION 652
MAINTENANCE OF TRAFFIC
Construction Sign Sheeting Material

Super high intensity fluorescent retroreflective sheeting, ASTM D 4956 - Type VII, Type VIII, or Type IX (prismatic), is required for all construction signs.

SPECIAL PROVISION
SECTION 656
Temporary Soil Erosion and Water Pollution Control

The following is added to Section 656 regarding Project Specific Information and Requirements. All references to the Maine Department of Transportation Best Management Practices for Erosion and Sedimentation Control (a.k.a. Best Management Practices manual or BMP Manual) are a reference to the latest revision of said manual. The latest version is dated "February 2008" and is available at:

http://www.maine.gov/mdot/env/documents/pdf/bmp2008/BMP2008full.pdf

Procedures specified shall be according to the BMP Manual unless stated otherwise.

Project Specific Information and Requirements

The following information and requirements apply specifically to this Project. The temporary soil erosion and water pollution control measures associated with this work shall be addressed in the Soil Erosion and Water Pollution Control Plan (SEWPCP.)

The Kennebec River is home to three sensitive Endangered Species, and as such, the Maine Department of Transportation (MaineDOT) and the Federal Highway Administration (FHWA) have consulted with the U.S. Fish and Wildlife Service (USFWS), National Marine Fisheries Service (NMFS), and the National Oceanic and Atmospheric Administration (NOAA) regarding the best methods to protect Endangered Species during construction. *Consequently, several unique terms and conditions are to be met during construction for the project to remain in compliance with the Army Corps of Engineers (ACOE) and Maine Department of Environmental Protection (MDEP) permits authorizing construction at this site. Those terms and conditions are outlined in the section 10.2 of the Final Biological Opinion dated 11/26/12, SpecialProvision 105, and in the Special Conditions sections of both, the ACOE and MDEP, permits.* **The preparer of the project specific Soil Erosion Pollution Control Plan (SEWPCP) and the Spill Prevention and Countermeasure Control (SPCC) plan shall include language, proper phasing, and project specific information in the plans that directly pertain to compliance with the terms and conditions mentioned above.**

1. Newly disturbed earth shall be mulched by the end of each workday. Mulch shall be maintained on a daily basis.

2. The SEWPCP shall describe the location and method of temporary erosion and sediment control for existing and proposed catch basins, outlet areas and culvert inlets and outlets.

3. Prior to initiating construction activities, convene state and federal resources agencies to review the bridge replacement activities and review any new information for potential impacts that were not considered during consultation.

SPECIAL PROVISION
SECTION 656
Temporary Soil Erosion and Water Pollution Control

4. **If water is flowing within the drainage system, the water shall be diverted to a stable area or conduit and work shall be conducted in the dry.** The Contractor's plan shall address when and where the diversions will be necessary.

5. Dust control items other than those under Standard Specification 637, if applicable, shall be included in the plan.

6. Permanent slope stabilization measures shall be applied within one week of the last soil disturbance. Temporary slope stabilization is required on a daily basis.

7. Permanent seeding shall be done in accordance with *Special Provision, Section 618, Seeding* unless the Contract states otherwise.

8. Culvert inlet and outlet protection shall be installed within 48 hours of culvert installation, or prior to a storm event, whichever is sooner.

9. Temporary winter stabilization must be used between November 1st and April 1st or outside of that time period if the ground is frozen or snow covered. Temporary winter stabilization involves, at a minimum, covering all disturbed soils and seeded ground that is not Acceptable Work with an approved method. If temporary winter stabilization practices are used then spring procedures for permanent stabilization shall also be described in the SEWPCP. Use of these methods for over-winter temporary erosion control will be incidental to the contract and be paid for as part of Pay Item 656.75.

10. Demolition debris (including debris from wearing surface removal, saw cut slurry, dust, concrete debris, etc.) shall be contained and shall not be allowed to discharge to any resource. All demolition debris shall be disposed of in accordance with *Standard Specifications, Section 202.03, Removing Existing Superstructure, Structural Concrete, Railings, Curbs, Sidewalks and Bridges*. Containment and disposal of demolition debris shall be addressed in the Contractor's SEWPCP.

11. If a cofferdam sedimentation basin is used, it shall be located in an upland area where the water can settle and sink into the ground or be released slowly to the resource in a

SPECIAL PROVISION
SECTION 656
Temporary Soil Erosion and Water Pollution Control

manner that will not cause erosion. The location of such a cofferdam sedimentation basin shall be addressed in the SEWPCP.

12. Prior to release to a natural resource, any impounded water that has been in contact with concrete placed during construction must have a pH between 7.0 and 8.5, must be within one pH unit of the background pH level of the resource and shall have a turbidity no greater than the receiving resource. This requirement is applicable to concrete that is placed or spilled (including leakage from forms) as well as indirect contact via tools or equipment. Water not meeting release criteria shall be addressed in the SEWPCP. Discharging impounded water to the stream must take place in a manner that does not disturb the stream bottom or cause erosion.

13. The Contractor shall be responsible for monitoring pH with a calibrated meter accurate to 0.1 units. A record of pH measurements shall be kept in the Environmental Coordinator's log (Section 656.4.4.)

SPECIAL PROVISION
SECTION 853
BOAT

Description:

The Contractor shall provide and maintain a late model boat, 14 to 18 feet in length, capable of carrying a minimum of 4 passengers. This boat shall be of a stable design, Tri-hulled, contain a minimum of 2 oars, and powered by a motor with a minimum of 40 Horsepower. The boat shall be equipped to meet all United States Coast Guard (USCG) regulations for a boat of the specified length. In addition to the required equipment, oars, sufficient lines, fenders, and other deck gear will be provided as required, to attach to the structure.

The boat shall be stored at a convenient secure location adjacent to the project. This boat shall be for the exclusive use of MaineDOT employees.

Method of Measurement:

This work will be measured for payment by the Lump Sum, complete in place and accepted.

Basis of Payment:

The work shall be paid for at the contract Lump Sum price for the boat, motor, gas, oil, repair, maintenance and storage. The boat, motor, etc. will become the property of the Contractor at the completion of this project.

Payment will be made under:

Pay Item		Pay Unit
853.10	Boat	Lump Sum

SPECIAL PROVISION
Section 890
SPECIAL WORK
(Special Work #1 - Utility Conduit)

Description

This item shall consist of all work shown in the Plans, on the Utility Conduit Support sheets.

This work shall include, but not be limited to, the installation of all fiberglass conduits, steel pipe sleeves and seals, expansion joints, bridge hangers, conduit hanger supports, manhole frame & cover, manhole cage, and all associated hardware related to these items, as shown on the Plans, as referenced in Special Provision 104 – Utilities, and in accordance with this specification.

Materials

American U-Tel shall supply all fiberglass conduits, steel pipe sleeves and seals, expansion joints, and bridge hangers and the associated hardware, as shown on the Plans.

The Contractor shall be responsible for the furnishing and fabrication of all other materials required, including but not limited to the conduit hanger supports, the manhole frame & cover, the manhole cage, and all associated hardware for the items, as shown on the Plans.

Method of Measurement

Special Work will be measured as one Lump Sum unit, erected and accepted in accordance with the Plans and this specification.

Basis of Payment

The accepted Special Work will be paid for at the contract Lump Sum price, which shall be full compensation for all materials, labor and equipment necessary for the work described above and as shown in the Plans in the Utility Conduit Support sheets.

Payment will be made under:

Pay Item		Pay Unit
890.01	Special Work #1	Lump Sum

STANDARD DETAIL UPDATES

Standard Details and Standard Detail updates are available at:
http://www.maine.gov/mdot/contractor-consultant-information/ss_standard_details_updates.php

Detail #	Description	Revision Date
203(03)	Backslope Rounding	1/29/08
502(03)	Concrete Curb - Bituminous Wearing Surface	8/08/11
502(03)A	Concrete Curb - Concrete Wearing Surface	2/2/09
502(07)	Precast Concrete Deck Panels - Layout Plan	2/2/09
502(07)A	Precast Concrete Deck Panels - Layout Plan	2/2/09
502(08)	Precast Concrete Deck Panels - Panel Plan	2/2/09
502(09)	Precast Concrete Deck Panels - Blocking Detail	2/2/09
502(10)	Precast Concrete Deck Panels	2/2/09
502(11)	Precast Concrete Deck Panels	2/2/09
502(12)	Precast Concrete Deck Panels - Notes	10/28/09
502(12)A	Precast Concrete Deck Panels - Notes	2/2/09
504(15)	Diaphragms	5/19/11
504(21)	Tension Flange Connection for Diaphragm and Cross Frames	10-11-12
504(22)	Diaphragm & Crossframe Notes	10/11/12
504(23)	Hand-Hold Details	12/08/05
502(24)	Hand-Hold Details	10/11/12
507(04)	Steel Bridge Railing	2/05/03
507(09)	Steel Bridge Railing	5/19/11

507(09)A	Steel Bridge Railing	5/19/11
526(06)	Permanent Concrete Barrier	2/2/09
526(08)	Permanent Concrete Barrier – Type IIIA	10/07/10
526(08)A	Permanent Concrete Barrier – Type IIIA	12/07/10
526(13)	Permanent Concrete Barrier – Type IIIB	2/2/09
526(14)	Permanent Concrete Barrier – Type IIIB	2/2/09
526(21)	Concrete Transition Barrier	2/2/09
526(33)	Concrete Transition Barrier	8/18/03
526(39)	Texas Classic Rail – Between Window	2/2/09
526(40)	Texas Classic Rail – Through Window	2/2/09
526(41)	Texas Classic Rail – Through Post	2/2/09
526(42)	Texas Classic Rail – Through Nose	2/2/09
535(01)	Precast Superstructure - Shear Key	10/12/06
535(02)	Precast Superstructure - Curb Key & Drip Notch	5/20/08
535(03)	Precast Superstructure - Shear Key	12/5/07
535(04)	Precast Superstructure - Shear Key	12/05/07
535(05)	Precast Superstructure - Post Tensioning	5/20/08
535(06)	Precast Superstructure - Sections	10/12/06
535(07)	Precast Superstructure - Precast Slab & Box	10/12/06
535(08)	Precast Superstructure - Sections	10/12/06
535(09)	Precast Superstructure - Sections	10/12/06
535(10)	Precast Superstructure - Sections	10/12/06
535(11)	Precast Superstructure - Sections	10/12/06

535(12)	Precast Superstructure - Sections	10/12/06
535(13)	Precast Superstructure - Sections	10/12/06
535(14)	Precast Superstructure - Stirrups	10/12/06
535(15)	Precast Superstructure - Plan	10/12/06
535(16)	Precast Superstructure - Reinforcing	10/12/06
535(17)	Precast Superstructure - Notes	12/05/07
604(01)	Catch Basins	11/16/05
604(05)	Type “A” & “B” Catch Basin Tops	11/16/05
604(06)	Type “C” Catch Basin Tops	11/16/05
604(07)	Manhole Top “D”	11/16/05
604(09)	Catch Basin Type “E”	11/16/05
606(02)	Multiple Mailbox Support	11/16/05
606(03)	Guardrail Standard Detail	9/19/12
606(07)	Reflectorized Beam Guardrail Delineator Details	11/16/05
606(20)	Guardrail - Type 3 - Single Rail - Bridge Mounted	2/2/09
606(21)	Guardrail - Type 3 - Single Rail - Bridge Mounted	2/2/09
606(22)	Guardrail - Type 3 - Single Rail - Bridge Mounted	2/2/09
606(23)	Guardrail - Type 3 - Single Rail - Bridge Mounted	2/2/09
609(03)	Curb Type 3	6/27/06
609(06)	Vertical Bridge Curb	2/12/09
609(07)	Curb Type 1	6/27/06

609(08)	Precast Concrete Transition Curb	2/2/09
610(02)	Stone Scour Protection	8/9/11
610(03)	Stone Scour Protection	5/19/11
610(04)	Stone Scour Protection	5/19/11
620(05)	Geotextile Placement for Protection of Slopes Adjactent to Stream & Tidal Areas	5/19/11
626(09)	Electrical Junction Box for Traffic Signals and Lighting	8/27/10
645(06)	H-Beam Posts – Highway Signing	7/21/04
645(09)	Installation of Type II Signs	7/21/04
801(01)	Drives on Sidewalk Sections	12/13/07
801(02)	Drives on Non-Sidewalk Sections	12/13/07

SUPPLEMENTAL SPECIFICATION

(Corrections, Additions, & Revisions to Standard Specifications - Revision of December 2002)

SECTION 101
CONTRACT INTERPRETATION

101.2 Definitions

Closeout Documentation Replace the sentence "A letter stating the amount….. DBE goals." with "DBE Goal Attainment Verification Form"

Add "Environmental Information Hazardous waste assessments, dredge material test results, boring logs, geophysical studies, and other records and reports of the environmental conditions. For a related provision, see Section 104.3.14 - Interpretation and Interpolation."

Add "Fabrication Engineer The Department's representative responsible for Quality Assurance of pre-fabricated products that are produced off-site."

Geotechnical Information Replace with the following: "Boring logs, soil reports, geotechnical design reports, ground penetrating radar evaluations, seismic refraction studies, and other records of subsurface conditions. For a related provision, see Section 104.3.14 - Interpretation and Interpolation."

SECTION 102
DELIVERY OF BIDS

102.7.1 Location and Time Add the following sentence "As a minimum, the Bidder will submit a Bid Package consisting of the Notice to Contractors, the completed Acknowledgement of Bid Amendments form, the completed Schedule of Items, 2 copies of the completed Agreement, Offer, & Award form, a Bid Bond or Bid Guarantee, and any other Certifications or Bid Requirements listed in the Bid Book."

102.11.1 Non-curable Bid Defects Replace E. with "E. The unit price and bid amount is not provided or a lump sum price is not provided or is illegible as determined by the Department."

SECTION 103
AWARD AND CONTRACTING

103.3.1 Notice and Information Gathering Change the first paragraph to read as follows: "After Bid Opening and as a condition for Award of a Contract, the Department may require an Apparent Successful Bidder to demonstrate to the Department's satisfaction that the Bidder is responsible and qualified to perform the Work."

SECTION 104
GENERAL RIGHTS AND RESPONSIBILITIES

104.3.14 Interpretation and Interpolation In the first sentence, change "…and Geotechnical Information." to "…Environmental Information, and Geotechnical Information."

SECTION 105
GENERAL SCOPE OF WORK

Delete the entire Section 105.6 and replace with the following:

105.6.1 Department Provided Services The Department will provide the Contractor with the description and coordinates of vertical and horizontal control points, set by the Department, within the Project Limits, for full construction Projects and other Projects where survey control is necessary. For Projects of 1,500 feet in length, or less: The Department will provide three points. For Projects between 1,500 and 5,000 feet in length: The Department will provide one set of two points at each end of the Project. For Projects in excess of 5,000 feet in length, the Department will provide one set of two points at each end of the Project, plus one additional set of two points for each mile of Project length. For non-full construction Projects and other Projects where survey control is not necessary, the Department will not set any control points and, therefore, will not provide description and coordinates of any control points. Upon request of the Contractor, the Department will provide the Department's survey data management software and Survey Manual to the Contractor, or its survey Subcontractor, for the exclusive use on the Department's Projects.

105.6.2 Contractor Provided Services Utilizing the survey information and points provided by the Department, described in Subsection 105.6.1, Department Provided Services, the Contractor shall provide all additional survey layout necessary to complete the Work. This may include, but not be limited to, reestablishing all points provided by the Department, establishing additional control points, running axis lines, providing layout and maintenance of all other lines, grades, or points, and survey quality control to ensure conformance with the Contract. The Contractor is also responsible for providing construction centerline, or close reference points, for all Utility Facilities relocations and adjustments as necessary to complete the Work. When the Work is to connect with existing Structures, the Contractor shall verify all dimensions before proceeding with the Work. The Contractor shall employ or retain competent engineering and/or surveying personnel to fulfill these responsibilities.

The Contractor must notify the Department of any errors or inconsistencies regarding the data and layout provided by the Department as provided by Section 104.3.3 - Duty to Notify Department If Ambiguities Discovered.

105.6.2.1 Survey Quality Control The Contractor is responsible for all construction survey quality control. Construction survey quality control is generally defined as, first, performing initial field survey layout of the Work and, second, performing an independent check of the initial layout using independent survey data to assure the accuracy of the initial layout; additional iterations of checks may be required if significant discrepancies are discovered in this process. Construction survey layout quality control also requires written documentation of the layout process such that the process can be followed and repeated, if necessary, by an independent survey crew.

105.6.3 Survey Quality Assurance It is the Department's prerogative to perform construction survey quality assurance. Construction survey quality assurance may, or may not, be performed by the Department. Construction survey quality assurance is generally defined as an independent check of the construction survey quality control. The construction survey

quality assurance process may involve physically checking the Contractor's construction survey layout using independent survey data, or may simply involve reviewing the construction survey quality control written documentation. If the Department elects to physically check the Contractor's survey layout, the Contractor's designated surveyor may be required to be present. The Department will provide a minimum notice of 48 hours to the Contractor, whenever possible, if the Contractor's designated surveyor's presence is required. Any errors discovered through the quality assurance process shall be corrected by the Contractor, at no additional cost to the Department.

105.6.4 Boundary Markers The Contractor shall preserve and protect from damage all monuments or other points that mark the boundaries of the Right-of-Way or abutting parcels that are outside the area that must be disturbed to perform the Work. The Contractor indemnifies and holds harmless the Department from all claims to reestablish the former location of all such monuments or points including claims arising from 14 MRSA § 7554-A. For a related provision, see Section 104.3.11 - Responsibility for Property of Others.

SECTION 106
QUALITY

106.4.3 Testing Change the first sentence in paragraph three from "…maintain records of all inspections and tests." to "…maintain original documentation of all inspections, tests, and calculations used to generate reports."

106.6 Acceptance Add the following to paragraph 1 of A: "This includes Sections 401 - Hot Mix Asphalt, 402 - Pavement Smoothness, and 502 - Structural Concrete - Method A - Air Content."

Add the following to the beginning of paragraph 3 of A: "For pay factors based on Quality Level Analysis, and"

106.7.1 Standard Deviation Method Add the following to F: "Note: In cases where the mean of the values is equal to either the USL or the LSL, then the PWL will be 50 regardless of the computed value of s."

Add the following to H: "Method C Hot Mix Asphalt: PF = [55 + (Quality Level *0.5)] * 0.01"

SECTION 107
TIME

107.3.1 General Add the following: "If a Holiday occurs on a Sunday, the following Monday shall be considered a Holiday. Sunday or Holiday work must be approved by the Department, except that the Contractor may work on Martin Luther King Day, President's Day, Patriot's Day, the Friday after Thanksgiving, and Columbus Day without the Department's approval."

107.7.2 Schedule of Liquidated Damages Replace the table of Liquidated Damages as follows:

From More Than	Up to and Including	Amount of Liquidated Damages per Calendar Day
$0	$100,000	$225

$100,000	$250,000	$350
$250,000	$500,000	$475
$500,000	$1,000,000	$675
$1,000,000	$2,000,000	$900
$2,000,000	$4,000,000	$1,000
$4,000,000	and more	$2,100

SECTION 108
PAYMENT

Remove Section 108.4 and replace with the following:

"108.4 Payment for Materials Obtained and Stored Acting upon a request from the Contractor and accompanied by bills or receipted bills, the Department will pay for all or part of the value of acceptable, non-perishable Materials that are to be incorporated in the Work, including Materials that are to be incorporated into the Work, not delivered on the Work site, and stored at places acceptable to the Department. Examples of such Materials include steel piles, stone masonry, curbing, timber and lumber, metal Culverts, stone and sand, gravel, and other Materials. The Department will not make payment on living or perishable Materials until acceptably planted in their final locations.

If payment for Materials is made to the Contractor based on bills, only, then the Contractor must provide receipted bills to the Department for these Materials within 14 days of the date the Contractor receives payment for the Materials. Failure of the Contractor to provide receipted bills for these Materials within 14 days of the dated the Contractor receives payment will result in the paid amount being withheld from the subsequent progress payment, or payments, until such time the receipted bills are received by the Department.

Materials paid for by the Department are the property of the Department, but the risk of loss shall remain with the Contractor. Payment for Materials does not constitute Acceptance of the Material. If Materials for which the Department has paid are later found to be unacceptable, then the Department may withhold amounts reflecting such unacceptable Materials from payments otherwise due the Contractor.

In the event of Default, the Department may use or cause to be used all paid-for Materials in any manner that is in the best interest of the Department."

SECTION 109
CHANGES

109.1.1 Changes Permitted Add the following to the end of the paragraph: "There will be no adjustment to Contract Time due to an increase or decrease in quantities, compared to those estimated, except as addressed through Contract Modification(s)."

109.1.2 Substantial Changes to Major Items Add the following to the end of the paragraph: "Contract Time adjustments may be made for substantial changes to Major Items when the change affects the Critical Path, as determined by the Department"

109.4.4 Investigation / Adjustment Third sentence, delete the words "subsections (A) - (E)"

109.5.1 Definitions - Types of Delays

B. Compensable Delay Replace (1) with the following; "a weather related Uncontrollable Event of such an unusually severe nature that a Federal Emergency Disaster is declared. The Contractor will only be entitled to an Equitable Adjustment if the Project falls within the geographic boundaries prescribed under the disaster declaration."

109.7.2 Basis of Payment Replace with the following: "Adjustments will be established by mutual Agreement based upon Unit or Lump Sum Prices. These agreed Unit or Lump Sum prices will be full compensation and no additions or mark-ups are allowed. If Agreement cannot be reached, the Contractor shall accept payment on a Force Account basis as provided in Section 109.7.5 - Force Account Work, as full and complete compensation for all Work relating to the Equitable Adjustment."

109.7.3 Compensable Items Delete this Section entirely.

109.7.4 Non-Compensable Items Replace with the following: "The Contractor is not entitled to compensation or reimbursement for any of the following items:

A. Total profit or home office overhead in excess of 15%,
B. ……."

109.7.5 Force Account Work

C. Equipment
Paragraph 2, delete sentence 1 which starts; "Equipment leased…."

Paragraph 6, change sentence 2 from "The Contractor may furnish…" to read "If requested by the Department, the Contractor will produce cost data to assist the Department in the establishment of such rental rate, including all records that are relevant to the Actual Costs including rental Receipts, acquisition costs, financing documents, lease Agreements, and maintenance and operational cost records."
Add the following paragraph; "Equipment leased by the Contractor for Force Account Work and actually used on the Project will be paid for at the actual invoice amount plus 10% markup for administrative costs."

Add the following section;

"F. Subcontractor Work When accomplishing Force Account Work that utilizes Subcontractors, the Contractor will be allowed a maximum markup of 5% for profit and overhead on the Subcontractor's portion of the Force Account Work. If the Department does not accept the Subcontractor quote, then the Subcontractor work will be subject to the Force Account provisions with a 5% markup for profit & overhead.."

SECTION 110
INDEMNIFICATION, BONDING, AND INSURANCE

Delete the entire Section 110.2.3 and replace with the following:

110.2.3 Bonding for Landscape Establishment Period The Contractor shall provide a signed, valid, and enforceable Performance, Warranty, or Maintenance Bond complying with the Contract, to the Department at Final Acceptance.

The bond shall be in the full amount for all Pay Items for work pursuant to Sec 621, Landscape, payable to the "Treasurer - State of Maine," and on the Department's forms, on exact copies thereof, or on forms that do not contain any significant variations from the Department's forms as solely determined by the Department.

The Contractor shall pay all premiums and take all other actions necessary to keep said bond in effect for the duration of the Landscape Establishment Period described in Special Provision 621.0036 - Establishment Period. If the Surety becomes financially insolvent, ceases to be licensed or approved to do business in the State of Maine, or stops operating in the United States, the Contractor shall file new bonds complying with this Section within 10 Days of the date the Contractor is notified or becomes aware of such change.

All Bonds shall be procured from a company organized and operating in the United States, licensed or approved to do business in the State of Maine by the State of Maine Department of Business Regulation, Bureau of Insurance, and listed on the latest Federal Department of the Treasury listing for "Companies Holding Certificates of Authority as Acceptable Sureties on Federal Bonds and as Acceptable Reinsuring Companies."

By issuing a bond, the Surety agrees to be bound by all terms of the Contract, including those related to payment, time for performance, quality, warranties, and the Department's self-help remedy provided in Section 112.1 - Default to the same extent as if all terms of the Contract are contained in the bond(s).

Regarding claims related to any obligations covered by the bond, the Surety shall provide, within 60 Days of Receipt of written notice thereof, full payment of the entire claim or written notice of all bases upon which it is denying or contesting payment. Failure of the Surety to provide such notice within the 60-day period constitutes the Surety's waiver of any right to deny or contest payment and the Surety's acknowledgment that the claim is valid and undisputed.

SECTION 202
REMOVING STRUCTURES AND OBSTRUCTIONS

202.02 Removing Buildings Make the following change to the last sentence in the final paragraph, change "…Code of Maine Regulations 401." to "…Department of Environmental Protection Maine Solid Waste Management Rules, 06-096 CMR Ch. 401, Landfill Siting, Design and Operation."

SECTION 203
EXCAVATION AND EMBANKMENT

203.01 Description Under b. Rock Excavation; add the following sentence: "The use of perchlorate is not allowed in blasting operations."

Delete the entire Section 203.041 and replace with the following:
"203.041 Salvage of Existing Hot Mix Asphalt Pavement All existing hot mix asphalt pavement designated to be removed under this contract must be salvaged for utilization. Existing hot mix asphalt pavement material shall not be deposited in any waste area or be placed below subgrade in any embankment.

Methods of utilization may be any of the following:

1. Used as a replacement for untreated aggregate surface course on entrances provided the material contains no particles greater than 50 mm [2 in] in any dimension. Payment will be made under Pay Item 411.09, Untreated Aggregate Surface Course or 411.10, Untreated Aggregate Surface Course, Truck Measure. Material shall be placed, shaped, compacted and stabilized as directed by the Resident.

2. Used as the top 3" of gravel. Recycled Asphalt Pavement (RAP) shall be process to 1½" minus and blending will not be allowed. When this method is utilized, a surcharge will not be required

3. Stockpiled at commercial or approved sites for commercial or MaineDOT use.

4. Other approved methods proposed by the Contractor, and approved by the Resident which will assure proper use of the existing hot mix asphalt pavement.

The cost of salvaging hot mix asphalt material will be included for payment under the applicable pay item, with no additional allowances made, which will be full compensation for removing, temporarily stockpiling, and rehandling, if necessary, and utilizing the material in entrances or other approved uses, or stockpiling at an approved site as described above. The material will also be measured and paid for under the applicable Pay Item if it is reused for aggregate in entrances, or other approved uses."

SECTION 502
STRUCTURAL CONCRETE

502.05 Composition and Proportioning; TABLE #1; NOTE #2; third sentence; Change "…alcohol based saline sealer…" to "alcohol based silane sealer…". Add NOTE #6 to Class S Concrete.

502.0502 Quality Assurance Method A - Rejection by Resident Change the first sentence to read: "For an individual sublot with test results failing to meet the criteria in Table #1, or if the calculated pay factor for Air Content is less than 0.80……"

502.0503 Quality Assurance Method B - Rejection by Resident Change the first sentence to read: "For material represented by a verification test with test results failing to meet the criteria in Table #1, the Department will……"

502.0505 Resolution of Disputed Acceptance Test Results Combine the second and third sentence to read: "Circumstances may arise, however, where the Department may ……"
502.10 Forms and False work
D. Removal of Forms and False work 1., First paragraph; first, second, and third sentence; replace "forms" with "forms and false work"

502.11 Placing Concrete
G. Concrete Wearing Surface and Structural Slabs on Precast Superstructures Last paragraph; third sentence; replace "The temperature of the concrete shall not exceed 24° C [75° F} at the time of placement." with "The temperature of the concrete shall not exceed 24° C [75° F} at the time the concrete is placed in its final position."

502.15 Curing Concrete First paragraph; replace the first sentence with the following; "All concrete surfaces shall be kept wet with clean, fresh water for a curing period of at least 7 days after concrete placing, with the exception of vertical surfaces as provided for in Section 502.10 (D) - Removal of Forms and False work."

Second paragraph; delete the first two sentences.
Third paragraph; delete the entire paragraph which starts "When the ambient temperature…."
Fourth paragraph; delete "approved" to now read "…continuously wet for the entire curing period…"

Fifth paragraph; second sentence; change "…as soon as it is possible to do so without damaging the concrete surface." to "…as soon as possible."

Seventh paragraph; first sentence; change "…until the end of the curing period." to "…until the end of the curing period, except as provided for in Section 502.10(D) - Removal of Forms and False work."

502.19 Basis of Payment First paragraph, second sentence; add "pier nose armor" to the list of items included in the contract price for concrete.

SECTION 503
REINFORCING STEEL

503.06 Placing and Fastening Change the second paragraph, first sentence from: "All tack welding shall be done in accordance with Section 504, Structural Steel." to "All tack welding shall be done in accordance with AWS D1.4 Structural Welding Code - Reinforcing Steel."

SECTION 504
STRUCTURAL STEEL

504.09 Facilities for Inspection Add the follow as the last paragraph: "Failure to comply with the above requirements will be consider to be a denial to allow access to work by the Contractor. The Department will reject any work done when access for inspection is denied."

504.18 Plates for Fabricated Members Change the second paragraph, first sentence from: "…ASTM A 898/A 898 M…" to "…ASTM A 898/A 898 M or ASTM A 435/A 435 M as applicable and…"

504.31 Shop Assembly Add the following as the last sentence: "The minimum assembly length shall include bearing centerlines of at least two substructure units."

504.64 Non Destructive Testing-Ancillary Bridge Products and Support Structures Change the third paragraph, first sentence from "One hundred percent…" to "Twenty five percent…"

SECTION 535
PRECAST, PRESTRESSED CONCRETE SUPERSTRUCTURE

535.02 Materials Change "Steel Strand for Concrete Reinforcement" to "Steel Strand." Add the following to the beginning of the third paragraph; "Concrete shall be Class P conforming to the requirements in this section. 28 day compressive strength shall be as stated on the plans. Coarse aggregate…."

535.05 Inspection Facilities Add the follow as the last paragraph: "If the above requirements are not met, the Contractor shall be considered to be in violation of Standard Specification 104.2.5 – Right to Inspect Work. All work occurring during a violation of this specification will be rejected."

535.26 Lateral Post-Tensioning Replace the first paragraph; "A final tension…" with "Overstressing strands for setting losses cannot be accomplished for chuck to chuck lengths of 7.6 m [25 ft] and less. In such instances, refer to the Plans for all materials and methods. Otherwise, post-tensioning shall be in accordance with PCI standards and shall provide the anchorage force noted in the Plans. The applied jacking force shall be no less than 100% of the design jacking force."

SECTION 603
PIPE CULVERTS AND STORM DRAINS

603.0311 Corrugated Polyethylene Pipe for Option III Replace the Minimum Mandrel Diameter Table with the following:

Nominal Size US Customary (in)	Minimum Mandrel Diameter (in)	Nominal Size Metric (mm)	Minimum Mandrel Diameter (mm)
12	11.23	300	280.73
15	14.04	375	350.91
18	16.84	450	421.09
24	22.46	600	561.45
30	28.07	750	701.81
36	33.69	900	842.18
42	39.30	1050	982.54
48	44.92	1200	1122.90

SECTION 604
MANHOLES, INLETS, AND CATCH BASINS

604.02 Materials Add the following:

"Tops and Traps 712.07

Corrugated Metal Units	712.08
Catch Basin and Manhole Steps	712.09”

SECTION 605
UNDERDRAINS

605.05 Underdrain Outlets Make the following change:

In the first paragraph, second sentence, delete the words “metal pipe”.

SECTION 606
GUARDRAIL

606.02 Materials Delete the entire paragraph which reads “The sole patented supplier of multiple mailbox….” and replace with “Acceptable multiple mailbox assemblies shall be listed on the Department’s Approved Products List and shall be NCHRP 350 tested and approved.” Delete the entire paragraph which reads “Retroreflective beam guardrail delineators….” and replace with “Reflectorized sheeting for Guardrail Delineators shall meet the requirements of Section 719.01 - Reflective Sheeting. Delineators shall be fabricated from high-impact, ultraviolet and weather resistant thermoplastic.

606.09 Basis of Payment First paragraph; delete the second and third sentence in their entirety and replace with “Butterfly-type guardrail reflectorized delineators shall be mounted on all W-beam guardrail at an interval of every 10 posts [62.5 ft] on tangents sections and every 5 posts [31.25 ft] on curved sections as directed by the Resident. On divided highways, the delineators shall be yellow on the left hand side and silver/white on the right hand side. On two-way roadways, the delineators shall be silver/white on the right hand side. All delineators shall have retroreflective sheeting applied to only the traffic facing side. Reflectorized guardrail delineators will not be paid for directly, but will be considered incidental to the guardrail items.”

SECTION 609
CURB

609.04 Bituminous Curb f., Delete the requirement “Color Natural (White)”

SECTION 610
STONE FILL, RIPRAP, STONE BLANKET, AND STONE DITCH PROTECTION

Add the following paragraph to Section 610.02:
“Materials shall meet the requirements of the following Sections of Special Provision 703:

Stone Fill	703.25
Plain and Hand Laid Riprap	703.26
Stone Blanket	703.27
Heavy Riprap	703.28

Definitions 703.32"

Add the following paragraph to Section 610.032.a.
"Stone fill and stone blanket shall be placed on the slope in a well-knit, compact and uniform layer. The surface stones shall be chinked with smaller stone from the same source."

Add the following paragraph to Section 610.032.b:
"Riprap shall be placed on the slope in a well-knit, compact and uniform layer. The surface stones shall be chinked with smaller stone from the same source."

Add the following to Section 610.032: "Section 610.032.d. The grading of riprap, stone fill, stone blanket and stone ditch protection shall be determined by the Resident by visual inspection of the load before it is dumped into place, or, if ordered by the Resident, by dumping individual loads on a flat surface and sorting and measuring the individual rocks contained in the load. A separate, reference pile of stone with the required gradation will be placed by the Contractor at a convenient location where the Resident can see and judge by eye the suitability of the rock being placed during the duration of the project. The Resident reserves the right to reject stone at the job site or stockpile, and in place. Stone rejected at the job site or in place shall be removed from the site at no additional cost to the Department."

SECTION 615
LOAM

615.02 Materials Make the following change:

Organic Content	Percent by Volume
Humus	"5% - 10%", as determined by Ignition Test

SECTION 618
SEEDING

618.01 Description Change the first sentence to read as follows: "This work shall consist of furnishing and applying seed ….." Also remove ",and cellulose fiber mulch" from 618.01(a).
618.03 Rates of Application In 618.03(a), remove the last sentence and replace with the following: "These rates shall apply to Seeding Method 2, 3, and Crown Vetch."

In 618.03(c) "1.8 kg [4 lb]/unit." to "1.95 kg [4 lb]/unit."

618.09 Construction Method In 618.09(a) 1, sentence two, replace "100 mm [4 in]" with "25 mm [1 in] (Method 1 areas) and 50 mm [2 in] (Method 2 areas)"

618.15 Temporary Seeding Change the Pay Unit from Unit to Kg [lb].

SECTION 620
GEOTEXTILES

620.03 Placement Section (c)
Title: Replace "Non-woven" in title with "Erosion Control".

First Paragraph: Replace first word "Non-woven" with "Woven monofilament".
Second Paragraph: Replace second word "Non-woven" with "Erosion Control".

620.07 Shipment, Storage, Protection and Repair of Fabric Section (a)
Replace the second sentence with the following: "Damaged geotextiles, as identified by the Resident, shall be repaired immediately."

620.09 Basis of Payment
Pay Item 620.58: Replace "Non-woven" with "Erosion Control"
Pay Item 620.59: Replace "Non-woven" with "Erosion Control"

SECTION 621
LANDSCAPING

621.0036 Establishment Period In paragraph 4 and 5, change "time of Final Acceptance" to "end of the period of establishment". In Paragraph 7, change "Final Acceptance date" to ""end of the period of establishment" and change "date of Final Acceptance" to "end of the period of establishment".

SECTION 626
HIGHWAY SIGNING

626.034 Concrete Foundations Add to the following to the end of the second paragraph: "Pre-cast and cast-in-place foundations shall be warranteed against leaning and corrosion for two years after the project is completed. If the lean is greater than 2 degrees from normal or the foundation is spalling within the first two years, the Contractor shall replace the foundation at no extra cost."

SECTION 627
PAVEMENT MARKINGS

627.10 Basis of Payment Add to the following to the end of the third paragraph: "If allowed by Special Provision, the Contractor may utilize Temporary Bi-Directional Yellow and White(As required) Delineators as temporary pavement marking lines and paid for at the contract lump sum price. Such payment will include as many applications as required and removal."

SECTION 637
DUST CONTROL

637.06 Basis of Payment Add the following after the second sentence of the third paragraph: "Failure by the Contractor to follow Standard Specification or Special Provision - Section 637 and/or the Contractor's own Soil Erosion and Pollution Control Plan concerning Dust Control and/or the Contractor's own Traffic Control Plan concerning Dust Control and/or visible evidence of excessive dust problems, as determined by the Resident, will result in a reduction in payment, computed by reducing the Lump Sum Total by 5% per occurrence per day. The Department's Resident or any other representative of the Department reserves the right to

suspend the work at any time and request a meeting to discuss violations and remedies. The Department shall not be held responsible for any delay in the work due to any suspension under this item. Additional penalties may also be assessed in accordance with Special Provision 652 - Work Zone Traffic Control and Standard Specification 656 - Temporary Soil Erosion and Water Pollution Control."

SECTION 639
ENGINEERING FACILITIES

639.04 Field Offices Change the forth to last paragraph from: "The Contractor shall provide a fully functional desktop copier…" to "….desktop copier/scanner…"

Description Change "Floor Area" to "Floor Area (Outside Dimension)". Change Type B floor area from "15 (160)" to "20 (217)".

639.09 Telephone Paragraph 1 is amended as follows:
"The contractor shall provide **two** telephone lines and two telephones,…."

Add- "In addition the contractor will supply one computer broadband connection, modem lease and router. The router shall have wireless access and be 802.11n or 802.11g capable and wireless. The type of connection supplied will be contingent upon the availability of services (i.e. DSL or Cable Broadband). It shall be the contractor's option to provide dynamic or static IP addresses through the service. **The selected service will have a minimum downstream connection of 1.5 Mbps and 384 Kbps upstream.** The contractor shall be responsible for the installation charges and all reinstallation charges following suspended periods. Monthly service and maintenance charges shall be billed by the Internet Service Provider (ISP) directly to the contractor."

SECTION 652
MAINTENANCE OF TRAFFIC

652.2.3 Flashing Arrow Board Delete the existing 5 paragraphs and replace with the following: Flashing Arrow Panels (FAP) must be of a type that has been submitted to AASHTO's National Transportation Product Evaluation Program (NTPEP) for evaluation and placed on the Maine Department of Transportations' Approved Products List of Portable Changeable Message Signs & Flashing Arrow Panels.

FAP units shall meet requirements of the current Manual on Uniform Traffic Control Devices (MUTCD) for Type "C" panels as described in Section 6F.56 - Temporary Traffic Control Devices. An FAP shall have matrix of a minimum of 15 low-glare, sealed beam, Par 46 elements capable of either flashing or sequential displays as well as the various operating modes as described in the MUTCD, Chapter 6-F. If an FAP consisting of a bulb matrix is used, each element should be recess-mounted or equipped with an upper hood of not less than 180 degrees. The color presented by the elements shall be yellow.

FAP elements shall be capable of at least a 50 percent dimming from full brilliance. Full brilliance should be used for daytime operation and the dimmed mode shall be used for nighttime operation. FAP shall be at least 2.4 M x 1.2 M [96" x 48"] and finished in non-

reflective black. The FAP shall be interpretable for a distance not less than 1.6 km [1 mile].

Operating modes shall include, flashing arrow, sequential arrow, sequential chevron, flashing double arrow, and flashing caution. In the three arrow signals, the second light from the arrow point shall not operate.

The minimum element on-time shall be 50 percent for the flashing mode, with equal intervals of 25 percent for each sequential phase. The flashing rate shall be not less than 25 nor more than 40 flashes per minute. All on-board circuitry shall be solid state.

Primary power source shall be 12 volt solar with a battery back-up to provide continuous operation when failure of the primary power source occurs, up to 30 days with fully charged batteries. Batteries must be capable of being charged from an onboard 110 volt AC power source and the unit shall be equipped with a cable for this purpose.

Controller and battery compartments shall be enclosed in lockable, weather-tight boxes.
The FAP shall be mounted on a pneumatic-tired trailer or other suitable support for hauling to various locations, as directed. The minimum mounting height of an arrow panel should be 2.1 M [7 feet] from the roadway to the bottom of the panel.

The face of the trailer shall be delineated on a permanent basis by affixing retro-reflective material, known as conspicuity material, in a continuous line as seen by oncoming drivers.

A portable changeable message sign may be used to simulate an arrow panel display."

652.2.4 Other Devices Delete the last paragraph and add the following:
"652.2.5 Portable Changeable Message Sign Trailer mounted Portable Changeable Message Signs (PCMS) must be of a type that has been submitted to AASHTO's National Transportation Product Evaluation Program (NTPEP) for evaluation and placed on the Maine Department of Transportations' Approved Products List of Portable Changeable Message Signs & Flashing Arrow Panels. The PCMS unit shall meet or exceed the current specifications of the Manual on Uniform Traffic Control Devices (MUTCD), 6F.55.

The front face of the sign should be covered with a low-glare protective material. The color of the LED elements shall be amber on a black background. The PCMS should be visible from a distance of 0.8 km [0.5 mile] day and night and have a minimum 15º viewing angle. Characters must be legible from a distance of at least 200 M [650 feet].

The message panel should have adjustable display rates (minimum of 3 seconds per phase), so that the entire message can be read at least twice at the posted speed, the off-peak 85th-percentile speed prior to work starting, or the anticipated operating speed. Each message shall consist of either one or two phases. A phase shall consist of up to eight characters per line. The unit must be capable of displaying at least three lines of text with eight characters per line. Each character shall be 457 mm [18"] high. Each character module shall use at least a five wide and seven high pixel matrix. The text of the messages shall not scroll or travel horizontally or vertically across the face of the sign.

Units shall automatically adjust their brightness under varying light conditions to maintain legibility.

The control system shall include a display screen upon which messages can be reviewed before being displayed on the message sign. The control system shall be capable of maintaining memory when power is unavailable. Message must be changeable with either a notebook computer or an on-board keypad. The controller shall have the capability to store a minimum of 200 user-defined and 200 pre-programmed messages. Controller and battery compartments shall be enclosed in lockable, weather-tight boxes.

PCMS units shall have the capability of being made programmable by means of wireless communications. PCMS units shall also be fully capable of having an on-board radar system installed if required for a particular application.

PCMS' primary power source shall be solar with a battery back-up to provide continuous operation when failure of the primary power source occurs. Batteries must be capable of being charged from a 110 volt AC power source. The unit must also be capable of being operated solely from a 110 volt AC power source and be equipped with a cable for this purpose.

The PCMS shall be mounted on a trailer in such a way that the bottom of the message sign panel shall be a minimum of 2.1 M [7 ft] above the roadway in urban areas and 1.5 M [5 ft] above the roadway in rural areas when it is in the operating mode. PCMS trailers should be of a heavy duty type with a 51 mm [2"] ball hitch and a minimum of four leveling jacks (at each corner). The sign shall be capable of being rotated 360° relative to the trailer. The face of the trailer shall be delineated on a permanent basis by affixing retro-reflective material, known as conspicuity material, in a continuous line as seen by oncoming drivers."

652.3.3 Submittal of Traffic Control Plan In item e. change "A list of all certified flaggers…" to "A list of all the Contractor's certified flaggers…"

Change a. in the list of requirements to: "a. The name, telephone number, and other contact numbers (cellular phone, pager, if any) of the Contractor's Traffic Control Supervisor (the person with overall responsibility for following the TCP), who has received Work Zone Traffic Control Training commensurate with the level of responsibility shown in the requirements of the Contract, and who is empowered to immediately resolve any work zone traffic control deficiencies or issues. Provide documentation that the Traffic Control Supervisor has completed a Work Zone Traffic Control Training Course (AGC, ATSSA, or other industry-recognized training), and a Supervisory refresher training every 5 years thereafter. Submit the course name, training entity, and date of training.

Traffic Control Training Course curriculum must be based on the standards and guidelines of the MUTCD and must include, at a minimum, the following:

1. Parts of Temporary Traffic Control Zone
2. Appropriate use and spacing of signs
3. Use and spacing of channelizing devices
4. Flagging basics
5. Typical examples and applications

The Traffic Control Supervisor, or designee directly overseeing physical installation, adjustment, and dismantling of work zone traffic control, will ensure all personnel performing

those activities are trained to execute the work in a safe and proper manner, in accordance with their level of decision-making and responsibility."

Add the follow to the list of requirements: "k. The plan for unexpected nighttime work along with a list of emergency nighttime equipment available on-site."

In the last paragraph add the following as the second sentence: "The Department will review and provide comments to the Contractor within 14 days of receipt of the TCP." Add the following as the last sentence: "The creation and modification of the TCP will be considered incidental to the related 652 items."

652.3.5 Installation of Traffic Control Devices In the first paragraph, first sentence; change "Signs shall be erected…" to "Portable signs shall be erected.." In the third sentence; change "Signs must be erected so that the sign face…" to "Post-mounted signs must also be erected so that the sign face…"

652.4 Flaggers Replace the first paragraph with the following; "The Contractor shall furnish flaggers as required by the TCP or as otherwise specified by the Resident. All flaggers must have successfully completed a flagger test approved by the Department and administered by a Department-approved Flagger-Certifier who is employing that flagger. All flaggers must carry an official certification card with them while flagging that has been issued by their employer. Flaggers shall wear safety apparel meeting ANSI 107-2004 Class 2 risk exposure that clearly identifies the wearer as a person, and is visible at a minimum distance of 300 m [1000 ft], and shall wear a hardhat with 360° retro-reflectivity. For nighttime conditions, Class 3 apparel, meeting ANSI 107-2004, shall be worn along with a hardhat with 360° retro-reflectivity. Retro-reflective or flashing SLOW/STOP paddles shall be used, and the flagger station shall be illuminated to assure visibility in accordance with 652.6.2."

Second paragraph, first sentence; change "…have sufficient distance to stop before entering the workspace." to "…have sufficient distance to stop at the intended stopping point." Third sentence; change "At a spot obstruction…" to "At a spot obstruction with adequate sight distance,…"

Fourth paragraph, delete and replace with "Flaggers shall be provided as a minimum, a 10 minute break, every 2 hours and a 30 minute or longer lunch period away from the work station. Flaggers may only receive 1 unpaid break per day; all other breaks must be paid. Sufficient certified flaggers shall be available onsite to provide for continuous flagging operations during break periods. If the flaggers are receiving the appropriate breaks, breaker flagger(s) shall be paid starting 2 hours after the work begins and ending 2 hours before the work ends. A maximum of 1 breaker per 6 flaggers will be paid. (1 breaker flagger for 2 to 6 flaggers, 2 breaker flaggers for 7 to 12 flaggers, etc)"

Add the following:

"652.5.1 Rumble Strip Crossing When lane shifts or lane closures require traffic to cross a permanent longitudinal rumble strip for 7 calendar days or less, the Contractor shall install warning signs that read "RUMBLE STRIP CROSSING" with a supplemental Motorcycle Plaque, (W8-15P).

When lane shifts or lane closures require traffic to cross a permanent longitudinal rumble strip for more than 7 calendar days, the Contractor shall pave in the rumble strips in the area that

traffic will cross, unless otherwise directed by the Resident. Rumble strips shall be replaced prior to the end of the project, when it is no longer necessary to cross them."

652.6 Nightwork Delete this section entirely and replace with the following:
"652.6.1 Daylight Work Times Unless otherwise described in the Contract, the Contractor is allowed to commence work and end work daily according to the Sunrise/Sunset Table at: http://www.sunrisesunset.com/usa/Maine.asp . If the Project town is not listed, the closest town on the list will be used as agreed at the Preconstruction Meeting. Any work conducted before sunrise or after sunset will be considered Night Work.

652.6.2 Night Work When Night Work occurs (either scheduled or unscheduled), the Contractor shall provide and maintain lighting on all equipment and at all work stations.

The lighting facilities shall be capable of providing light of sufficient intensity to permit good workmanship, safety and proper inspection at all times. The lighting shall be cut off and arranged on stanchions at a height that will provide perimeter lighting for each piece of equipment and will not interfere with traffic, including commercial vehicles, approaching the work site from either direction.

The Contractor shall have available portable floodlights for special areas.

The Contractor shall utilize padding, shielding or other insulation of mechanical and electrical equipment, if necessary, to minimize noise, and shall provide sufficient fuel, spare lamps, generators, etc. to maintain lighting of the work site.

The Contractor shall submit, as a subset of the Traffic Control Plan, a lighting plan at the Preconstruction Conference, showing the type and location of lights to be used for night work. The Resident may require modifications be made to the lighting set up in actual field conditions.

Prior to beginning any Night Work, the Contractor shall furnish a light meter for the Residents use that is capable of measuring the range of light levels from 5 to 20 foot-candles.

Horizontal illumination, for activities on the ground, shall be measured with the photometer parallel to the road surface. For purposes of roadway lighting, the photometer is placed on the pavement. Vertical illumination, for overhead activities, shall be measured with the photometer perpendicular to the road surface. Measurements shall be taken at the height and location of the overhead activity.

Night Work lighting requirements:

Mobile Operations: For mobile-type operations, each piece of equipment (paver, roller, milling machine, etc) will carry indirect (i.e. balloon type) lights capable of producing at least 10 foot-candles of lighting around the work area of the equipment.

Fixed Operations: For fixed-type operations (flaggers, curb, bridge, pipes, etc.), direct (i.e. tower) lighting will be utilized capable of illuminating the work area with at least 10 foot-candles of light.

Hybrid Operations: For hybrid-type operations (guardrail, sweeping, Inslope excavation, etc.), either direct or indirect lighting may be utilized. The chosen lights must be capable of producing at least 10 foot-candles of light around the work area of the equipment
Inspection Operations: Areas required to be inspected by the Department will require a minimum of 5 foot-candles of lighting. This may be accomplished through direct or indirect means.

All workers shall wear safety apparel labeled as meeting the ANSI 107-2004 standard performance for Class 3 risk exposure.

The Contractor shall apply 2- inch wide retro-reflective tape, with alternating red and white segments, to outline the front back and sides of construction vehicles and equipment, to define their shape and size to the extent practicable. Pickup trucks and personal vehicles are exempt from this requirement. The Contractor shall furnish approved signs reading "Construction Vehicle - Keep Back" to be used on trucks hauling to the project when such signs are deemed necessary by the Resident. The signs shall be a minimum of 30 inches by 60 inches, Black and Orange, ASTM D 4956 - Type VII, Type VIII, or Type IX (prismatic).

All vehicles used on the project, including pickup trucks and personal vehicles, shall be equipped with amber flashing lights, visible from both front and rear, or by means of single, approved type, revolving, flashing or strobe lights mounted so as to be visible 360º. The vehicle flashing system shall be in continuous operation while the vehicle is on any part of the project.

The Resident or any other representative of the Department reserves the right to suspend the work at any time and request a meeting to discuss violations and remedies. The Department shall not be held responsible for any delay in the work due to any suspension under this item. Failure to follow the approved Lighting Plan will result in a Traffic Control violation.

Payment for lighting, vehicle mounted signs and other costs accrued because of night work will not be made directly but will be considered incidental to the related contract items."

652.8.2 Other Items Replace the first paragraph with the following: "The accepted quantities of flagger hours will be paid for at the contract unit price per hour for each flagging station occupied excluding lunch breaks, and for each approved breaker flagger. Overtime hours, as reported on the certified payrolls, will be paid an additional 30% of the bid price for 652.38. The computation and additional payment for overtime hours will occur during the project close-out process and will be paid as additional hours of 652.38 to the nearest ¼ hour. The contract unit price shall be full compensation for hiring, transporting, equipping, supervising, and the payment of flaggers and all overhead and incidentals necessary to complete the work."
Replace the last paragraph with the following: "There will be no payment made under any 652 pay items after the expiration of the adjusted total contract time."

SECTION 653
POLYSTYRENE PLASTIC INSULATION

653.05 Placing Backfill In the second sentence; change "…shall be not less than 150 mm [6 in] loose measure." to "…shall be not less than 250 mm [10 in] loose measure." In the third sentence; change "…crawler type bulldozer of not more than 390 kg/m^2 [80 lb/ft^2] ground contact pressure…" to "…crawler type bulldozer of not more than 4875 kg/m^2 [2000 lb/ft^2] ground contact pressure…"

653.06 Compaction In the last sentence; change "…not more than 390 kg/m^2 [80 lb/ft^2] ground contact…" to "…not more than 4875 kg/m^2 [2000 lb/ft^2] ground contact…"

SECTION 656
TEMPORARY SOIL EROSION AND WATER POLLUTION CONTROL

656.5.1 If Pay Item 656.75 Provided Replace the second paragraph with the following: "Failure by the Contractor to follow Standard Specification or Special Provision - Section 656 and/or the Contractor's own Soil Erosion and Water Pollution Control Plan (SEWPCP) will result in a violation letter and a reduction in payment as shown in the schedule below. The Department's Resident or any other representative of The Department reserves the right to suspend the work at any time and request a meeting to discuss violations and remedies. The Department shall not be held responsible for any delay in the work due to any suspension under this item.

ORIGINAL CONTRACT AMOUNT

From	Up to and	Amount of Penalty Damages per Violation		
More Than	Including	1st	2nd	3rd & Subsequent
$0	$1,000,000	$250	$500	$1,250
$1,000,000	$2,000,000	$500	$1,000	$2,500
$2,000,000	$4,000,000	$1,000	$2,000	$5,000
$4,000,000	and more	$2,000	$4,000	$10,000"

SECTION 701
STRUCTURAL CONCRETE RELATED MATERIALS

701.10 Fly Ash - Chemical Requirements Change all references from "ASTM C311" to "ASTM C114".

SECTION 703
AGGREGATES

703.05 Aggregate for Sand Leveling Change the percent passing the 9.5 mm [3/8 in] sieve from "85 – 10" to "85 – 100"

703.06 Aggregate for Base and Subbase Delete the first paragraph: "The material shall have…" and replace with "The material shall have a minimum degradation value of 15 as determined by Washington State DOT Test Method T113, Method of Test for Determination of Degradation Value (January 2009 version), except that the reported degradation value will be the result of testing a single specimen from that portion of a sample that passes the 12.5 mm [½ in] sieve and is retained on the 2.00 mm [No. 10] sieve, minus any reclaimed asphalt pavement used."

703.07 Aggregates for HMA Pavements Delete the forth paragraph: "The composite blend shall have…" and replace with "The composite blend, minus any reclaimed asphalt pavement used, shall have a Micro-Deval value of 18.0 or less as determined by AASHTO T 327. In the event the material exceeds the Micro Deval limit, a Washington Degradation test shall be performed. The material shall be acceptable if it has a value of 30 or more as determined by Washington State DOT Test Method T 113, Method of Test for Determination of Degradation Value (January 2009 version) except that the reported degradation value will be the result of testing a single composite specimen from that portion of the sample that passes the 12.5mm [1/2 inch] sieve and is retained on the 2.00mm [No 10] sieve, minus any reclaimed asphalt pavement used."

703.09 HMA Mixture Composition The coarse and fine aggregate shall meet the requirements of Section 703.07. The several aggregate fractions for mixtures shall be sized, graded, and combined in such proportions that the resulting composite blends will meet the grading requirements of the following table.

AGGREGATE GRADATION CONTROL POINTS

SIEVE SIZE	Nominal Maximum Aggregate Size---Control Points (Percent Passing)				
	TYPE 25 mm	TYPE 19 mm	TYPE 12.5 mm	TYPE 9.5 mm	TYPE 4.75 mm
	PERCENT BY WEIGHT PASSING - COMBINED AGGREGATE				
37.5 mm	100				
25 mm	90-100	100			
19 mm	-90	90-100	100		
12.5 mm		-90	90-100	100	100
9.5 mm		-	-90	90-100	95-100
4.75 mm		-	-	-90	80-100
2.36 mm	19-45	23-49	28-58	32-67	40 - 80
1.18 mm		-	-	-	-
600 µm		-	-	-	-
300 µm		-	-	-	-
75 µm	1-7	2-8	2-10	2-10	2-10

Gradation Classification---- The combined aggregate gradation shall be classified as coarse-graded when it passes below the Primary Control Sieve (PCS) control point as defined in the following table. All other gradations shall be classified as fine-graded.

GRADATION CLASSIFICATION

PCS Control Point for Mixture Nominal Maximum Aggregate Size (% passing)				
Nominal Maximum Aggregate Size	TYPE 25 mm	TYPE 19 mm	TYPE 12.5 mm	TYPE 9.5 mm
Primary Control Sieve	4.75 mm	4.75 mm	2.36 mm	2.36 mm
PCS Control Point (% passing)	40	47	39	47

If a Grading "D" mixture is allowed per Special Provision Section 403, it shall meet the following gradation and the aggregate requirements of Section 703.07.

Sieve Designation	Percentage by Weight Passing Square Mesh Sieves
½ inch	100
⅜ inch	93-100
No. 4	60-80
No. 8	46-65
No. 16	25-55
No. 30	16-40
No. 50	10-30
No. 100	6-22
No. 200	3.0-8.0

703.18 Common Borrow Replace the first paragraph with the following: "Common borrow shall consist of earth, suitable for embankment construction. It shall be free from frozen material, perishable rubbish, peat, and other unsuitable material including material currently or previously contaminated by chemical, radiological, or biological agents unless the material is from a DOT project and authorized by DEP for use."

703.22 Underdrain Backfill Material Change the first paragraph from "…for Underdrain Type B…" to "…for Underdrain Type B and C…"

Replace subsections 703.25 through 703.28 with the following:
"703.25 Stone Fill Stones for stone fill shall consist of hard, sound, durable rock that will not disintegrate by exposure to water or weather. Stone for stone fill shall be angular and rough. Rounded, subrounded, or long thin stones will not be allowed. Stone for stone fill may be obtained from quarries or by screening oversized rock from earth borrow pits. The maximum allowable length to thickness ratio will be 3:1. The minimum stone size (10 lbs) shall have an average dimension of 5 inches. The maximum stone size (500 lbs) shall have a maximum dimension of approximately 36 inches. Larger stones may be used if approved by the Resident. Fifty percent of the stones by volume shall have an average dimension of 12 inches (200 lbs).

703.26 Plain and Hand Laid Riprap Stone for riprap shall consist of hard, sound durable rock that will not disintegrate by exposure to water or weather. Stone for riprap shall be angular and rough. Rounded, subrounded or long thin stones will not be allowed. The maximum allowable length to width ratio will be 3:1. Stone for riprap may be obtained from quarries or by screening oversized rock from earth borrow pits. The minimum stone size (10 lbs) shall have an average dimension of 5 inches. The maximum stone size (200 lbs) shall have an average dimension of approximately 12 inches. Larger stones may be used if approved by the Resident. Fifty percent of the stones by volume shall have an average dimension greater than 9 inches (50 lbs).

703.27 Stone Blanket Stones for stone blanket shall consist of sound durable rock that will not disintegrate by exposure to water or weather. Stone for stone blanket shall be angular and rough. Rounded or subrounded stones will not be allowed. Stones may be obtained from

quarries or by screening oversized rock from earth borrow pits. The minimum stone size (300 lbs) shall have minimum dimension of 14 inches, and the maximum stone size (3000 lbs) shall have a maximum dimension of approximately 66 inches. Fifty percent of the stones by volume shall have average dimension greater than 24 inches (1000 lbs).

703.28 Heavy Riprap Stone for heavy riprap shall consist of hard, sound, durable rock that will not disintegrate by exposure to water or weather. Stone for heavy riprap shall be angular and rough. Rounded, subrounded, or thin, flat stones will not be allowed. The maximum allowable length to width ratio will be 3:1. Stone for heavy riprap may be obtained from quarries or by screening oversized rock from earth borrow pits. The minimum stone size (500 lbs) shall have minimum dimension of 15 inches, and at least fifty percent of the stones by volume shall have an average dimension greater than 24 inches (1000 lbs)."

Add the following paragraph:
"703.32 Definitions (ASTM D 2488, Table 1).
Angular: Particles have sharp edges and relatively plane sides with unpolished surfaces
Subrounded: Particles have nearly plane sides but have well-rounded corners and edges
Rounded: Particles have smoothly curved sides and no edges"

SECTION 706
NON-METALLIC PIPE

706.06 Corrugated Polyethylene Pipe for Underdrain, Option I and Option III Culvert Pipe Change the first sentence from "…300 mm diameters to 900 mm" to "…300 mm diameters to 1200 mm" Delete, in its' entirety, the last sentence which begins "This pipe and resins…" and replace with the following; "Manufacturers of corrugated polyethylene pipe must participate in, and maintain compliance with, AASHTO's National Transportation Product Evaluation Program (www.ntpep.org) which audits producers of plastic pipe. A certificate of compliance must be provided with each shipment."

SECTION 708
PAINTS AND PERSERVATIVES

708.03 Pavement Marking Paint Change the first sentence from "…AASHTO M248" to "…the Maine DOT Maintenance Fast-Dry Water-Based Traffic Paint on file at the Traffic Section in Augusta". Delete, in its' entirety, the last sentence.

SECTION 709
REINFORCING STEEL AND WELDED STEEL WIRE FABIC

709.03 Steel Strand Change the second paragraph from "…shall be 12mm [½ inch] AASHTO M203M/M203 (ASTM A416/A416M)…" to "…shall be 15.24 mm [0.600 inch] diameter AASHTO M203 (ASTM A416)…"

SECTION 710
FENCE AND GUARDRAIL

710.03 Chain Link Fabric Add the following sentence: "Chain Link fabric for PVC coated shall conform to the requirements of AASHTO M181, Type IV-Class B."

710.04 Metal Beam Rail Replace with the following: "Galvanized steel rail elements shall conform to the requirements of AASHTO M 180, Class A, Type II.

When corrosion resistant steel is specified, rail shall conform to AASHTO M 180, Class A, Type IV. Beams of corrosion resistant steel shall not be painted or galvanized. They shall be so handled and stored that the traffic face of these beams, used in a continuous run of guardrail, shall not show a distinctive color differential.

When metal beam rail is to be installed on a curve having a radius of curvature of 150 ft. or less, the beam sections shall be fabricated on an arc to the required radius and permanently stamped or embossed with the designated radius.

The engineer may take one piece of guardrail, a backup plate, and end or buffer section from each 200 pieces in a lot, or from each lot if less than 200 pieces are included therein for determination of compliance with specification requirements. If one piece fails to conform to the requirements of this specification, two other pieces shall be tested. If either of these pieces fails to conform to the requirements of this specification, the lot of material represented by these samples shall be rejected. A lot shall be considered that quantity of material offered for inspection at one time that bears the same heat and coating identification."

710.07 Guardrail Posts Section b. change "…AASHTO M183/M183M…" to "…AASHTO M 270M/M 270 Grade 250 (36)…"

SECTION 712
MISCELLANEOUS HIGHWAY MATERIALS

712.04 Stone Curbing and Edging Delete the existing and replace with the following: "Stone for curbing and edging shall be approved granite from acceptable sources. The stone shall be hard and durable, predominantly gray in color, free from seams that would be likely to impair its structural integrity, and of a smooth splitting character. Natural grain size and color variations characteristic of the source deposit will be permitted. Such natural variations may include bands or clusters of mineral crystallization provided they do not impair the structural integrity of the curb stone. The Contractor shall submit for approval the name of the quarry that is the proposed source of the granite for curb materials along with full scale color photos of the granite. Such submission shall be made sufficiently in advance of ordering so that the Resident may have an opportunity to judge the stone, both as to quality and appearance. Samples of curbing shall be submitted for approval only when requested by the Resident. The dimensions, shape, and other details shall be as shown on the plans."

712.06 Precast Concrete Units In the first paragraph, change "…ASTM C478M…" to "…AASHTO M199…" Delete the second paragraph and replace with the following; "Approved structural fibers may be used as a replacement of 6 x 6 #10 gauge welded wire fabric when used at an approved dosage rate for the construction of manhole and catch basin units. The material used shall be one of the products listed on the Maine Department of Transportation's Approved Product List of Structural Fiber Reinforcement." Delete the fifth paragraph and replace with the following; "The concrete mix design shall be approved by the Department. Concrete shall contain 6% air content, plus or minus 1½% tolerance when tested according to AASHTO T152. All concrete shall develop a minimum compressive strength of 28 MPa [4000 psi] in 28 days when tested according to AASHTO T22. The absorption of a

specimen, when tested according to AASHTO T280, Test Method "A", shall not exceed nine percent of the dry mass."

Add the following:
"712.07 Tops, and Traps These metal units shall conform to the plan dimensions and to the following specification requirements for the designated materials.

Gray iron or ductile iron castings shall conform to the requirements of AASHTO M306 unless otherwise designated."

712.08 Corrugated Metal Units The units shall conform to plan dimensions and the metal to AASHTO M36/M36M. Bituminous coating, when specified, shall conform to AASHTO M190 Type A.

712.09 Catch Basin and Manhole Steps Steps for catch basins and for manholes shall conform to ASTM C478M [ASTM C478], Section 13 for either of the following material:

(a) Aluminum steps-ASTM B221M, [ASTM B211] Alloy 6061-T6 or 6005-T5.

(b) Reinforced plastic steps Steel reinforcing bar with injection molded plastic coating copolymer polypropylene. Polypropylene shall conform to ASTM D 4101.

712.23 Flashing Lights Flashing Lights shall be power operated or battery operated as specified.

(a) Power operated flashing lights shall consist of housing, adapters, lamps, sockets, reflectors, lens, hoods and other necessary equipment designed to give clearly visible signal indications within an angle of at least 45 degrees and from 3 to 90 m [10 to 300 ft] under all light and atmospheric conditions.

Two circuit flasher controllers with a two-circuit filter capable of providing alternate flashing operations at the rate of not less than 50 nor more than 60 flashes per minute shall be provided.

The lamps shall be 650 lumens, 120 volt traffic signal lamps with sockets constructed to properly focus and hold the lamp firmly in position.
The housing shall have a rotatable sun visor not less than 175 mm [7 in] in length designed to shield the lens.

Reflectors shall be of such design that light from a properly focused lamp will reflect the light rays parallel. Reflectors shall have a maximum diameter at the point of contact with the lens of approximately 200 mm [8 in].

The lens shall consist of a round one-piece convex amber material which, when mounted, shall have a visible diameter of approximately 200 mm [8 in]. They shall distribute light and not diffuse it. The distribution of the light shall be asymmetrical in a downward direction. The light distribution of the lens shall not be uniform, but shall consist of a small high intensity portion with narrow distribution for long distance throw and a larger

low intensity portion with wide distribution for short distance throw. Lenses shall be marked to indicate the top and bottom of the lens.

(b) Battery operated flashing lights shall be self- illuminated by an electric lamp behind the lens. These lights shall also be externally illuminated by reflex-reflective elements built into the lens to enable it to be seen by reflex-reflection of the light from the headlights of oncoming traffic. The batteries must be entirely enclosed in a case. A locking device must secure the case. The light shall have a flash rate of not less than 50 nor more than 60 flashes per minute from minus 30 °C [minus 20 °F] to plus 65 °C [plus 150 °F]. The light shall have an on time of not less than 10 percent of the flash cycle. The light beam projected upon a surface perpendicular to the axis of the light beam shall produce a lighted rectangular projection whose minimum horizontal dimension shall be 5 degrees each side of the horizontal axis. The effective intensity shall not have an initial value greater than 15.0 candelas or drop below 4.0 candelas during the first 336 hours of continuous flashing. The illuminated lens shall appear to be uniformly bright over its entire illuminated surface when viewed from any point within an angle of 9 degrees each side of the vertical axis and 5 degrees each side of the horizontal axis. The lens shall not be less than 175 mm [7 in] in diameter including a reflex-reflector ring of 13 mm [½ in] minimum width around the periphery. The lens shall be yellow in color and have a minimum relative luminous transmittance of 0.440 with a luminance of 2854° Kelvin. The lens shall be one-piece construction. The lens material shall be plastic and meet the luminous transmission requirements of this specification. The case containing the batteries and circuitry shall be constructed of a material capable of withstanding abuse equal to or greater than 1.21 mm thick steel [No. 18 U.S. Standard Gage Steel]. The housing and the lens frame, if of metal shall be properly cleaned, degreased and pretreated to promote adhesion. It shall be given one or more coats of enamel which, when dry shall completely obscure the metal. The enamel coating shall be of such quality that when the coated case is struck a light blow with a sharp tool, the paint will not chip or crack and if scratched with a knife will not powder. The case shall be so constructed and closed as to exclude moisture that would affect the proper operation of light. The case shall have a weep hole to allow the escape of moisture from condensation. Photoelectric controls, if provided, shall keep the light operating whenever the ambient light falls below 215 lx [20 foot candles]. Each light shall be plainly marked as to the manufacturer's name and model number.

If required by the Resident, certification as to conformance to these specifications shall be furnished based on results of tests made by an independent testing laboratory. All lights are subject to random inspection and testing. All necessary random samples shall be provided to the Resident upon request without cost to the Department. All such samples shall be returned to the Contractor upon completion of the tests.

712.32 Copper Tubing Copper tubing and fittings shall conform to the requirements of ASTM B88M Type A [ASTM B88, Type K] or better.

712.33 Non-metallic Pipe, Flexible Non-metallic pipe and pipe fittings shall be acceptable flexible pipe manufactured from virgin polyethylene polymer suitable for transmitting liquids intended for human or animal consumption.

712.34 Non-metallic Pipe, Rigid Non-metallic pipe shall be Schedule 40 polyvinylchloride (PVC) that meets the requirement of ASTM D1785. Fittings shall be of the same material.

712.341 Metallic Pipe Metallic pipe shall be ANSI, Standard B36.10, Schedule 40 steel pipe conforming to the requirements of ASTM A53 Types E or S, Grade B. End plates shall be steel conforming to ASTM A36/A36M.

Both the sleeve and end plates shall be hot dip galvanized. Pipe sleeve splices shall be welded splices with full penetration weld before galvanizing.

712.35 Epoxy Resin Epoxy resin for grouting or sealing shall consist of a mineral filled thixotropic, flexible epoxy resin having a pot life of approximately one hour at 10°C [50°F]. The grout shall be an approved product suitable for cementing steel dowels into the preformed holes of curb inlets and adjacent curbing. The sealant shall be an approved product, light gray in color and suitable for coating the surface.

712.36 Bituminous Curb The asphalt cement for bituminous curb shall be of the grade required for the wearing course, or shall be Viscosity Grade AC-20 meeting the current requirements of Subsection 702.01 Asphalt Cement. The aggregate shall conform to the requirements of Subsection 703.07. The coarse aggregate portion retained on the 2.36 mm [No. 8] sieve may be either crushed rock or crushed gravel.

The mineral constituents of the bituminous mixture shall be sized and graded and combined in a composite blend that will produce a stable durable curbing with an acceptable texture.

Bituminous material for curb shall meet the requirements of Section 403 - Hot Bituminous Pavement.

712.37 Precast Concrete Slab Portland cement concrete for precast slabs shall meet the requirements of Section 502 - Structural Concrete, Class A.

The slabs shall be precast to the dimension shown on the plans and cross section and in accordance with the Standard Detail plans for Concrete Sidewalk Slab. The surface shall be finished with a float finish in accordance with Subsection 502.14(c). Lift devices of sufficient strength to hold the slab while suspended from cables shall be cast into the top or back of the slab.

712.38 Stone Slab Stone slabs shall be of granite from an acceptable source, hard, durable, predominantly gray in color, free from seams which impair the structural integrity and be of smooth splitting character. Natural color variations characteristic of the deposit will be permitted. Exposed surfaces shall be free from drill holes or indications of drill holes. The granite slabs in any one section of backslope must be all the same finish.

The granite slabs shall be scabble dressed or sawed to an approximately true plane having no projections or depressions over 13 mm [½ in] under a 600 mm [2 ft] straightedge or over 25 mm [1 in] under a 1200 mm [4 ft] straightedge. The arris at the intersection of the top surface and exposed front face shall be pitched so that the arris line is uniform throughout the length of the installed slabs. The sides shall be square to the exposed face unless the slabs are to be set

on a radius or other special condition which requires that the joints be cut to fit, but in any case shall be so finished that when the stones are placed side by side no space more than 20 mm [3/4 in] shall show in the joint for the full exposed height.

Liftpin holes in all sides will be allowed except on the exposed face.

SECTION 717
ROADSIDE IMPROVEMENT MATERIAL

717.03 C. Method #3 - Roadside Mixture #3 Change the seed proportions to the following:

Crown Vetch	25%
Perennial Lupine	25%
Red Clover	12.5%
Annual Rye	37.5%

717.05 Mulch Binder Change the third sentence to read as follows:

"Paper fiber mulch may be used as a binder at the rate of 2.3 kg/unit [5 lb/unit]."

SECTION 720
STRUCTURAL SUPPORTS FOR HIGHWAY SIGNS, LUMINAIRES, AND TRAFFIC SIGNALS

720.08 U-Channel Posts Change the first sentence from "…, U-Channel posts…" to "…, Rib Back U-Channel posts…"

SECTION 722
GEOTEXTILES

722.01 Stabilization/Reinforcement Geotextile Add the following to note #3; "The strengths specified in the columns labeled"<50%" and "≥ 50%" refer to the elongation at which the geotextile material was tested. For example; if a fabric is tested at 15% elongation then it must meet or exceed the minimum strength shown in the "<50%" column. Submittals must include the percent elongation at which the material was tested."

722.02 Drainage Geotextile Add the following to note #3; "The strengths specified in the columns labeled"<50%" and "≥ 50%" refer to the elongation at which the geotextile material was tested. For example; if a fabric is tested at 15% elongation then it must meet or exceed the minimum strength shown in the "<50%" column. Submittals must include the percent elongation at which the material was tested."

722.01 Erosion Control Geotextile Add the following note to Elongation in the Mechanical Property Table; "The strengths specified in the columns labeled"<50%" and "≥ 50%" refer to the elongation at which the geotextile material was tested. For example; if a fabric is tested at 15% elongation then it must meet or exceed the minimum strength shown in the "<50%" column. Submittals must include the percent elongation at which the material was tested."

APPENDIX A TO DIVISION 100

SECTION 1 - BIDDING PROVISIONS

A. Federally Required Certifications By signing and delivering a Bid, the Bidder certifies as provided in all certifications set forth in this Appendix A - Federal Contract Provisions Supplement including:

- Certification Regarding No Kickbacks to Procure Contract as provided on this page 1 below.
- Certification Regarding Non-collusion as provided on page 1 below.
- Certification Regarding Non-segregated Facilities as provided by FHWA Form 1273, section III set forth on page 21 below.
- "Certification Regarding Debarment, Suspension, Ineligibility and Voluntary Exclusion" as provided by FHWA Form 1273, section XI set forth on page 32 below.
- "Certification Regarding Use of Contract Funds for Lobbying" as provided by FHWA Form 1273, section XII set forth on page 35 below.

Unless otherwise provided below, the term "Bidder", for the purposes of these certifications, includes the Bidder, its principals, and the person(s) signing the Bid. Upon execution of the Contract, the Bidder (then called the Contractor) will again make all the certifications indicated in this paragraph above.

CERTIFICATION REGARDING NO KICKBACKS TO PROCURE CONTRACT Except expressly stated by the Bidder on sheets submitted with the Bid (if any), the Bidder hereby certifies, to the best of its knowledge and belief, that it has not:

(A) employed or retained for a commission, percentage, brokerage, contingent fee, or other consideration, any firm or person (other then a bona fide employee working solely for me) to solicit or secure this contract;

(B) agreed, as an express or implied condition for obtaining this contract, to employ or retain the services of any firm or person in connection with carrying out the contract, or;

C) paid, or agreed to pay, to any firm, organization, or person (other than a bona fide employee working solely for me) any fee, contribution, donation, or consideration of any kind for, or in connection with, procuring or carrying out the contract;

By signing and submitting a Bid, the Bidder acknowledges that this certification is to be furnished to the Maine Department of Transportation and the Federal Highway Administration, U.S. Department of Transportation in connection with this contract in anticipation of federal aid highway funds and is subject to applicable state and federal laws, both criminal and civil.

CERTIFICATION REGARDING NONCOLLUSION Under penalty of perjury as provided by federal law (28 U.S.C. §1746), the Bidder hereby certifies, to the best of its knowledge and belief, that:

the Bidder has not, either directly or indirectly, entered into any agreement, participated in any collusion, or otherwise taken any action in restraint of competitive bidding in connection with the Contract.

For a related provisions, see Section 102.7.2 (C) of the Standard Specifications - "Effects of Signing and Delivery of Bids" - "Certifications", Section 3 of this Appendix A entitled "Other Federal Requirements" including section XI - "Certification Regarding Debarment, Suspension, Ineligibility, and Voluntary Exclusion" and section XII. - "Certification Regarding Use of Contract Funds for Lobbying."

****

B. Bid Rigging Hotline To report bid rigging activities call: **1-800-424-9071**

The U.S. Department of Transportation (DOT) operates the above toll-free "hotline" Monday through Friday, 8:00 a.m. to 5:00 p.m., eastern time. Anyone with knowledge of possible bid rigging, bidder collusion, or other fraudulent activities should use the "hotline" to report such activities.

The "hotline" is part of the DOT's continuing effort to identify and investigate highway construction contract fraud and abuse and is operated under the direction of the DOT Inspector General. All information will be treated confidentially and caller anonymity will be respected.

****

SECTION 2 - FEDERAL EEO AND CIVIL RIGHTS REQUIREMENTS

Unless expressly otherwise provided in the Bid Documents, the provisions contained in this Section 2 of this "Federal Contract Provisions Supplement" are hereby incorporated into the Bid Documents and Contract.

A. Nondiscrimination & Civil Rights - Title VI The Contractor and its subcontractors shall not discriminate on the basis of race, color, national origin, or sex in the performance of this Contract. The Contractor shall carry out applicable requirements of 49 CFR Part 26 in the award and administration of DOT assisted contracts. Failure by the Contractor to carry out these requirements is a material breach of this contract, which may result in the termination of this contract or such other remedy as the Department deems appropriate. The Contractor and subcontractors shall comply with Title VI of the Civil Rights Act of 1964, as amended, and with all State of Maine and other Federal Civil Rights laws.

For related provisions, see Subsection B - "Nondiscrimination and Affirmative Action - Executive Order 11246" of this Section 2 and Section 3 - Other Federal Requirements of this "Federal Contract Provisions Supplement" including section II - "Nondiscrimination" of the "Required Contract Provisions, Federal Aid Construction Contracts", FHWA-1273.

B. Nondiscrimination and Affirmative Action - Executive Order 11246 Pursuant to Executive Order 11246, which was issued by President Johnson in 1965 and amended in 1967 and 1978, this Contract provides as follows.

The Contractor shall take specific affirmative actions to ensure equal employment opportunity. The evaluation of the Contractor's compliance with these specifications shall be based upon its efforts to achieve maximum results from its actions. The Contractor shall

document these efforts fully, and shall implement affirmative action steps at least as extensive as the following:

Ensure and maintain a working environment free of harassment, intimidations, and coercion at all sites, and in all facilities at which the Contractor's employees are assigned to work. The Contractor, where possible, will assign two or more women to each construction project. The Contractor shall specifically ensure that all forepersons, superintendents, and other on-site supervisory personnel are aware of and carry out the Contractor's obligation to maintain such a working environment, with specific attention to minority or female individuals working at such sites or in such facilities.

Establish and maintain a current list of minority and female recruitment sources, provide written notification to minority and female recruitment sources and to community organizations when the Contractor or its union have employment opportunities available, and to maintain a record of the organization's responses.

Maintain a current file of the names, addresses and telephone numbers of each minority and female off-the-street applicant and minority or female referral from a union, a recruitment source or community organization and of what action was taken with respect to each such individual. If such individual was sent to the union hiring hall for referral and was not referred back to the Contractor by the union or, if referred, not employed by the Contractor, this shall be documented in the file with the reason therefore, along with whatever additional actions the Contractor may have taken.

Provide immediate written notification to the Department's Civil Rights Office when the union or unions with which the Contractor has a collective bargaining agreement has not referred to the Contractor a minority person or woman sent by the Contractor, or when the Contractor has other information that the union referral process has impeded the Design-Builder's efforts to meet its obligations.

Develop on-the-job training opportunities and/or participate in training programs for the area which expressly include minorities and women, including upgrading programs and apprenticeship and trainee programs relevant to the Contractor's employment needs, especially those programs funded or approved by the Department of Labor. The Contractor shall provide notice of these programs to the sources compiled under B above.

Disseminate the Contractor's EEO policy by providing notice of the policy to unions and training programs and requesting their cooperation in assisting the Contractor in meeting its EEO obligation; by including it in any policy manual and collective bargaining agreement; by publicizing it in the company newspaper, annual report, etc.; by specific review of the policy with all management personnel and with all minority and female employees at least once a year; and by posting the company EEO policy on bulletin boards accessible to all employees at each location where construction work is performed.

Review, at least annually, the company's EEO policy and affirmative action obligations under these specifications with all employees having any responsibility for hiring, assignment, layoff, termination, or other employment decisions including specific review

of these items with on-site supervisory personnel such as Superintendents, General Forepersons, etc., prior to the initiation of construction work at any job site. A written record shall be made and maintained identifying the time and place of these meetings, persons attending, subject matter discussed, and disposition of the subject matter.

Disseminate the Contractor's EEO policy externally by including it in any advertising in the news media, specifically including minority and female news media, and providing written notification to and discussing the Contractor's EEO policy with other Contractor's and Subcontractors with whom the Contractor does or anticipates doing business.

Direct its recruitment efforts, both orally and written to minority, female and community organizations, to schools with minority and female students and to minority and female recruitment and training organizations serving the Contractor's recruitment area and employment needs. Not later that one month prior to the date for the acceptance of applications for apprenticeship or other training by any recruitment source, the Contractor shall send written notification to organizations such as the above describing the openings, screenings, procedures, and test to be used in the selection process.

Encourage present minority and female employees to recruit other minority persons and women and, where reasonable, provide after school, summer and vacation employment to minority and female youth, both on the site and in other areas of a Contractor's workforce.

Validate all tests and other selection requirements.

Conduct, at least annually, an inventory and evaluation at least of all minority and female personnel for promotional opportunities and encourage these employees to seek or to prepare for, through appropriate training, etc., such opportunities.

Ensure that seniority practices, job classifications, work assignments and other personnel practices, do not have a discriminatory effect by continually monitoring all personnel and employment related activities to ensure that the EEO policy and the Contractor's obligations under these specifications are being carried out.

Ensure that all facilities and company activities are non segregated except that separate or single-user toilet and necessary changing facilities shall be provided to assure privacy between the sexes.

Document and maintain a record of all solicitations of offers for subcontracts from minority and female construction Contractor's and suppliers, including circulation of solicitations to minority and female Contractor associations and other business associations.

Conduct a review, at least annually, of all supervisors' adherence to and performance under the Contractor's EEO policies and affirmative action obligations.

C. Goals for Employment of Women and Minorities Per Executive Order 11246, craft tradesperson goals are 6.9% women and .5% minorities employed. However, goals may be

adjusted upward at the mutual agreement of the Contractor and the Department. Calculation of these percentages shall not include On-the-Job Training Program trainees, and shall not include clerical or field clerk position employees.

For a more complete presentation of requirements for such Goals, see the federally required document "Goals for Employment of Females and Minorities" set forth in the next 6 pages below.

****

Start of GOALS FOR EMPLOYMENT OF FEMALES AND MINORITIES
Federally Required Contract Document

§60-4.2 Solicitations

(d) The following notice shall be included in, and shall be part of, all solicitations for offers and bids on all Federal and federally assisted construction contracts or subcontracts in excess of $10,000 to be performed in geographical areas designated by the Director pursuant to §60-4.6 of this part (see 41 CFR 60-4.2(a)):

Notice of Requirement for Affirmative Action to Ensure Equal Opportunity (Executive Order 11246)

1. The Offeror's or bidder's attention is called to the "Equal Opportunity Clause" and the "Standard Federal Equal Employment Specifications" set forth herein.

2. The goals and timetables for minority and female participation, expressed in percentage terms for the Contractor's aggregate work force in each trade on all construction work in the covered area, are as follows:

Goals for female participation in each trade 6.9%

Goals for minority participation for each trade
Maine
001 Bangor, ME 0.8%
Non-SMSA Counties (Aroostook, Hancock, Penobscot, Piscataquis, Waldo, Washington)

002 Portland-Lewiston, ME
SMSA Counties: 4243 Lewiston-Auburn, ME 0.5%
(Androscoggin)

6403 Portland, ME 0.6%
(Cumberland, Sagadahoc)

Non-SMSA Counties: 0.5%
(Franklin, Kennebec, Knox, Lincoln, Oxford, Somerset, York)

These goals are applicable to all the Contractor's construction work (whether or not it is Federal or federally assisted) performed in the covered area. If the contractor performs

construction work in a geographical area located outside of the covered area, it shall apply the goals established for such geographical area where the work is actually performed. With regard to this second area, the contractor also is subject to the goals for both its federally involved and non federally involved construction.

The contractor's compliance with the Executive Order and the regulations in 41 CFR Part 60-4 shall be based on its implementation of the Equal Opportunity Clause, specific affirmative action obligations required by the specifications set forth in 41 CFR 60-4.3(a), and its efforts to meet the goals. The hours of minority and female employment and training must be substantially uniform throughout the length of the contract, and in each trade, and the contractor shall make a good faith effort to employ minorities and women evenly on each of its projects. The transfer of minority or female employees or trainees from Contractor to Contractor or from project to project for the sole purpose of meeting the Contractor's goals shall be in violation of the contract, the Executive Order and the regulations in 41 CFR Part 60-4. Compliance with the goals will be measured against the total work hours performed.

3. The Contractor shall provide written notification to the Director of the Office of Federal Contract Compliance Programs within 10 working days of award of any construction subcontract in excess of $10,000 at any tier for construction work under the contract resulting from this solicitation. The notification shall list the name, address and telephone number of the subcontractor, employer identification number of the subcontractor, estimated dollar amount of the subcontract; estimated started and completion dates of the subcontract; and the geographical area in which the subcontract is to be performed.

4. As used in this Notice, and in the Contract resulting from this solicitation, the "covered area" is (insert description of the geographical areas where the contract is to be performed giving the state, county and city, if any).

STANDARD FEDERAL EQUAL EMPLOYMENT OPPORTUNITY CONSTRUCTION CONTRACT SPECIFICATIONS (EXECUTIVE ORDER 11246)

1. As used in these specifications:

   a. "Covered area" means the geographical area described in the solicitation from which this contract resulted;

   b. "Director" means Director, Office of Federal Contract Compliance Programs, United States Department of Labor, or any person to whom the Director delegates authority;

   c. "Employer identification number" means the Federal Social Security number used on the Employer's Quarterly Federal Tax Return, U.S. Treasury Department form 941;

   d. "Minority" includes:
      (i) Black (all persons having origins in any of the Black African racial groups not of Hispanic origin);
      (ii) Hispanic (all persons of Mexican, Puerto Rican, Cuban, Central or South American or other Spanish Culture or origin, regardless of race);

(iii) Asian and Pacific Islander (all persons having origins in any of the original peoples of the Far East, Southeast Asia, the Indian Subcontinent, or the Pacific Islands); and
(iv) American Indian or Alaskan Native (all persons having origins in any of the original peoples of the North America and maintaining identifiable tribal affiliations through membership and participation or community identification).

2. Whenever the Contractor, or any subcontractor at any tier, subcontracts a portion of the work involving any construction trade, it shall physically include in each subcontract in excess of $10,000 the provisions of these specifications and the Notice which contains the applicable goals for minority and female participation and which is set forth in the solicitations from which this contract resulted.

3. If the contractor, is participating (pursuant to 41 CFR 60-4.5) in a Hometown Plan approved by the U.S. Department of Labor in the covered area either individually or through an association, its affirmative action obligations on all work in the Plan area (including goals and timetables) shall be in accordance with that Plan for those trades which have unions participating in the Plan. Contractors must be able to demonstrate their participation in and compliance with the provisions of any such Hometown Plan. Each Contractor or Subcontractor participating in an approved Plan is individually required to comply with its obligations under the EEO clause, and to make a good faith effort to achieve each goal under the Plan in each trade in which it has employees. The overall good faith performance by other Contractors for Subcontractors toward a goal in an approved Plan does not excuse any covered Contractor's or Subcontractor's failure to take good faith efforts to achieve the Plan goals and timetables.

4. The Contractor shall implement the specific affirmative action standards provided in paragraphs 7 a. through p. of these specifications. The goals set forth in the solicitation from which this contract resulted are expressed as percentages of the total hours of employment and training of minority and female utilization the Contractor should reasonably be able to achieve in each construction trade in which it has employees in contractors performing construction work in geographical areas where they do not have a Federal or federally assisted construction contract shall apply the minority and female goals established for the geographical areas where the work is being performed. Goals are published periodically in the Federal Register in notice form and such notices may be obtained from any Office of Federal Contract Compliance Programs office or from Federal procurement contracting officers. The Contractor is expected to make substantially uniform progress in meeting its goals in each craft during the period specific.

5. Neither the provisions of any collective bargaining agreement, nor the failure by a union with whom the Contractor has a collective bargaining agreement, to refer either minorities or women shall excuse the Contractor's obligations under these specifications, Executive Order 11246, or the regulations promulgated pursuant, thereto.

6. In order for the non working training hours of apprentices and trainees to be counted in meeting the goals, such apprentices and trainees must be employed by the Contractor during the training period, and the Contractor must have made a commitment to employ the apprentices and trainees at the completion of their training, subject to the availability of

employment opportunities. Trainees must be trained pursuant to training programs approved by the U.S. Department of Labor.

7. The Contractor shall take specific affirmative actions to ensure equal employment opportunity. The evaluation of the Contractor's compliance with these specifications shall be based upon its effort to achieve maximum results from its actions. The Contractor shall document these efforts fully, and shall implement affirmative action steps at least as expensive as the following:

   a. Ensure and maintain a working environment free of harassment, intimidation, coercion at all sites, and in all facilities at which the Contractor's employees are assigned to work. The Contractor, when possible, will assign two or more women to each construction project. The Contractor shall specifically ensure that all foremen, superintendents, and other on-site supervisory personnel are aware of and carry out the Contractor's obligation to maintain such a working environment, with specific attention to minority or female individuals working at such sites or in such facilities.

   b. Establish and maintain a current list of minority and female recruitment sources provide written notification to minority and female recruitment sources and to community organizations when the Contractor or its unions have employment opportunities available, and maintain a record of the organization's responses.

   c. Maintain a current file of the names, addresses and telephone numbers of each minority and female off-the-street applicant and minority or female referral from a union, a recruitment sources or community organization and of what action was taken with respect to each such individual. If such individual was sent to the union hiring hall for referral and was not referred back to the Contractor by the union or, if referred, not employed by the Contractor, this shall be documented in the file with the reason therefore, along with whatever additional actions the Contractor may have taken.

   d. Provide immediate written notification to the Director when the union or unions with which the Contractor has a collective bargaining agreement has not referred to the Contractor a minority person or woman sent by the Contractor, or when the Contractor has other information that the union referral process has impeded the Contractor's efforts to meet its obligations.

   e. Develop on-the-job training opportunities and/or participate in training programs for the area which expressly include minorities and women, including upgrading programs and apprenticeship and trainee programs relevant to the Contractor's employment needs, especially those programs funded or approved by the Department of Labor. The Contractor shall provide notice of these programs to the sources complied under 7b above.

   f. Disseminate the Contractor's EEO policy by providing notice of the policy to unions and training programs and requesting their cooperation in assisting the Contractor in meeting its EEO obligations; by including in any policy manual and collective bargaining agreement; by publicizing it in the company newspaper, annual report, etc.; by specific review of the policy with all management personnel and with all minority and female

employees at least once a year; and by posting the company EEO policy on bulletin boards accessible to all employees at each location where construction work is performed.

g. Review, at least annually, the company's EEO policy and affirmative action obligations under these specifications with all employees having any responsibility for hiring, assignment, layoff, termination or other employment decisions including specific review of these items with on-site supervisory personnel such as Superintendents, General Foremen, etc., prior to the initiation of construction work at any job site. A written record shall be made and maintained identifying the time and place of these meetings, persons attending, subject matter discussed, and disposition of the subject matter.

h. Disseminate the Contractor's EEO policy externally by including it in any advertising in the news media, specifically including minority and female news media, and providing written notification to and discussing the Contractor's EEO policy with other Contractors and Subcontractors with whom the Contractor does or anticipates doing business.

i. Direct its recruitment, efforts, both oral and written, to minority, female and community organizations, to schools with minority and female students and to minority and female recruitment and training organizations serving the Contractor's recruitment area and employment needs. Not later than one month other training by any recruitment source, the Contractor shall send written notification to organizations such as the above, describing prior to the date for the acceptance of applications for apprenticeship or the openings, screening procedures, and tests to be used in the selection process.

j. Encourage present minority and female employees to recruit other minority persons and women and, where reasonable, provide after school, summer and vacation employment to minority and female youth both on site and in other areas of a Contractor's work force.

k. Validate all tests and other selection requirements where there is an obligation to do so under 41 CFR Part 60-3.

l. Conduct, at least annually, an inventory and evaluation at least of all minority and female personnel for promotional opportunities and encourage these employees to seek or to prepare for, through appropriate training, etc., such opportunities.

m. Ensure that seniority practices, job classifications, work assignments and other personnel practices, do not have a discriminatory effect by continually monitoring all personnel and employment related activities to ensure that the EEO policy and the Contractor's obligations under these specifications are being carried out.

n. Ensure that all facilities and company activities are non segregated except that separate or single-user toilet and necessary changing facilities shall be provided to assure privacy between the sexes.

o. Document and maintain a record of all solicitations of offers for subcontracts from minority and female construction contractors and suppliers, including circulation of

solicitation to minority and female contractor associations and other business associations.

p. Conduct a review, at least annually, of all supervisor's adherence to and performance under the Contractor's EEO policies and affirmative action obligations.

8. Contractors are encouraged to participate in voluntary associations which assist in fulfilling one or more of their affirmative action obligations (7 a through p.). The efforts of a contractor association, joint contractor-union, contractor-community, or other similar group of which the contractor is a member and participant, may be asserted as fulfilling any one or more of its obligations under 7 a through p. of these specifications provided that the contractor actively participates in the group, makes every effort to assure that the group has a positive impact on the employment of minorities and women in the industry, ensures that the concrete benefits of the program and reflected in the Contractor's minority and female work force participation, makes a good faith effort to meet its individual goals and timetables, and can provide access to documentation which demonstrates the effectiveness of actions take on behalf of the Contractor. The obligation to comply, however, is the Contractor's and failure of such a group to fulfill an obligation shall not be a defense for the Contractor's noncompliance.

9. A single goal for minorities and a separate single goal for women have been established. The Contractor, however, is required to provide equal employment opportunity and to take affirmative action for all minority groups, both make and female, and all women, both minority and non-minority. Consequently, the Contractor may be in violation of the Executive Order if a particular group is employed in a substantially disparate manner (for example, specific minority group of women is underutilized.)

10. The Contractor shall not use the goals and timetables or affirmative action even through the Contractor has achieved its goals for women generally, the Contractor may be in violation of the Executive Order if standards to discriminate against any person because of race, color, religion, sex, or national origin.

11. The Contractor shall not enter into any Subcontract with any person or firm debarred from Government contracts pursuant to Executive Order 11246.

12. The Contractor shall carry out such sanctions and penalties for violation of these specifications and of the Equal Opportunity Clause, including suspension, termination and cancellation of existing subcontracts as may be imposed or ordered pursuant to Executive Order 11246, as amended, and its implementation regulations by the Office of Federal Contract Compliance Programs. Any Contractor who fails to carry out such sanctions and penalties shall be in violation of these specifications and Executive Order 11246, as amended.

13. The Contractor, in fulfilling its obligations under these specifications, shall implement specific affirmative action steps, at least as extensive as those standards prescribed in paragraph 7 of these specifications, so as to achieve maximum results from its efforts to ensure equal employment opportunity. If the Contractor fails to comply with the

requirements of the Executive Order, the implementing regulations, or these specifications, the Director shall proceed in accordance with 41 CFR 60-4.6.

14. The Contractor shall designate a responsible official to monitor all employment related activity to ensure that the company EEO policy is being carried out, to submit reports relating to the provisions hereof as may be required by the Government and to keep records. Records shall at least include for each employee the name, address, telephone numbers, construction trade, union affiliation if any, employee identification number when assigned, social security number, race, sex, status (e.g. mechanic, apprentice, trainee, helper, or laborer), dates of changes in status, hours worked per week in the indicated trade, rate of pay, and location sat which the work was performed. Records be maintained in an easily understandable and retrievable form; however, to the degree that existing records satisfy this requirement, contractors shall not be required to maintain separate records.

15. Nothing herein provided shall be construed as a limitation upon the application of other laws which establish different standards of compliance or upon the application of requirements for the hiring of local or other area residents (e.g., those under the Public Works Employment Act of 1977 and the Community Development Block Grant Program).

End of GOALS FOR EMPLOYMENT OF FEMALES AND MINORITIES
Federally Required Contract Document

****

D. Disadvantaged Business Enterprise (DBE) Requirements The Department has established an annual Disadvantaged Business Enterprise goal to be achieved through race neutral means. This goal will be adjusted periodically and will be provided by Supplemental Provision. The Contractor shall comply with all provisions of this section regarding DBE participation and the Department's latest version of the Disadvantaged Business Enterprise Program Manual, said Manual being incorporated herein by reference. In the case of conflict between this Contract and said Manual, this Contract shall control. The Department reserves the right to adjust DBE goals on a project-by-project basis by addendum.

Policy. It is the Department's policy that DBEs as defined in 23 CFR Part 26 and referenced in the Transportation Equity Act for 21st Century of 1998, as amended from the Surface Transportation Uniform Relocation Assistance Act of 1987, and the Intermodal Surface Transportation Efficiency Act of 1991. The intent hereto remains to provide the maximum opportunity for DBEs to participate in the performance of contracts financed in whole or in part with federal funds.

The Department and its Contractors shall not discriminate on the basis of race, color, national origin, ancestry, sex, age, or disability in the award and performance of DOT assisted contracts.

Disadvantaged Business Enterprises are those so certified by the Maine Department of Transportation Civil Rights Office prior to bid opening date.

The Department has determined that elements of a good faith effort to meet the contract goal include but are not limited to the following:

1. Whether the Contractor advertised in general circulation, trade association, and minority/women's-focus media concerning the subcontracting opportunities;

2. Whether the Contractor provided written notice to a reasonable number of specific DBEs that their interest in the contract is being solicited;

3. Whether the Contractor followed up on initial solicitations of interest by contacting DBEs to determine with certainty whether the DBEs were interested;

4. Whether the Contractor selected portions of the work to be performed by DBEs in order to increase the likelihood of meeting the DBE goals;

5. Whether the Contractor provided interested DBEs with adequate information about the plans, specification and requirements of the contract;

6. Whether the Contractor negotiated in good faith with interested DBEs, not rejecting the DBE as unqualified without sound reasons based on a thorough investigation of their capabilities;

7. Whether the Contractor made efforts to assist interested DBEs with other appropriate technical/financial assistance required by the Department or Contractor;

8. Whether the Contractor effectively used the services of available minority/women's community organizations, minority/women's business assistance offices; and other organizations that provide assistance in the recruitment and placement of DBEs.

Substitutions of DBEs. The following may be acceptable reasons for Civil Rights Office approval of such a change order:

- The DBE defaults, voluntarily removes itself or is over-extended;
- The Department deletes portions of the work to by performed by the DBE.

It is not intended that the ability to negotiate a more advantageous contract with another certified DBE be considered a valid basis for such a change in DBE utilization once the DBE Bid Submission review has been passed. Any requests to alter the DBE commitment must be in writing and included with the change order.

Failure to carry out terms of this Standard Specification shall be treated as a violation of this contract and will result in contract sanctions which may include withholding of partial payments totaling the creditable dollars amount which would have been paid for said DBE participation, termination of this contract or other measures which may affect the ability of the Contractor to obtain Department contracts.

Copies of the Maine Department of Transportation's DBE Program may be obtained from:

Maine Department of Transportation
Civil Rights Office
#16 State House Station
Augusta, Maine 04333-0016
tel. (207) 624-3519

Quarterly Reporting Requirement. The Contractor must submit Semi-annual reports of actual dollars paid to Disadvantaged Business Enterprises (DBE's) on this Project to the MaineDOT Civil Rights Office by the end of the third week of April and October for the period covering the preceding six months considered Federal Fiscal Year periods. The reports will be submitted directly to the Civil Rights Office on the form provided in the latest version of the DBE Program Manual. Failure to submit the report by the deadline may result in a withholding of approval of partial payment estimates by the Department.

SECTION 3 - OTHER FEDERAL REQUIREMENTS

Unless expressly otherwise provided in the Bid Documents, the provisions contained in this Section 3 of this "Federal Contract Provisions Supplement" are hereby incorporated into the Bid Documents and Contract.

A. Buy America

If the cost of products purchased for permanent use in this project which are manufactured of steel, iron or the application of any coating to products of these materials exceeds 0.1 percent of the contract amount, or $2,500.00, whichever is greater, the products shall have been manufactured and the coating applied in the United States. The coating materials are not subject to this clause, only the application of the coating. In computing that amount, only the cost of the product and coating application cost will be included.

Ore, for the manufacture of steel or iron, may be from outside the United States; however, all other manufacturing processes of steel or iron must be in the United States to qualify as having been manufactured in the United States.

United States includes the 50 United States and any place subject to the jurisdiction thereof.

Products of steel include, but are not limited to, such products as structural steel, piles, guardrail, steel culverts, reinforcing steel, structural plate and steel supports for signs, luminaries and signals.

Products of iron include, but are not limited to, such products as cast iron grates.

Application of coatings include, but are not limited to, such applications as epoxy, galvanized and paint.

To assure compliance with this section, the Contractor shall submit a certification letter on its letterhead to the Department stating the following:

> “This is to certify that products made of steel, iron or the application of any coating to products of these materials whose costs are in excess of $2,500.00 or 0.1 percent of the original contract amount, whichever is greater, were manufactured and the coating, if one was required, was applied in the United States.”

B. Materials

a. Convict Produced Materials References: 23 U.S.C. 114(b)(2), 23 CFR 635.417

Applicability: FHWA's prohibition against the use of convict material only applies to Federal-aid highways. Materials produced after July 1, 1991, by convict labor may only be incorporated in a Federal-aid highway construction project if: 1) such materials have been produced by convicts who are on parole, supervised release, or probation from a prison; or 2) such material has been produced in a qualified prison facility, e.g., prison industry, with the amount produced during any 12-month period, for use in Federal-aid projects, not exceeding the amount produced, for such use, during the 12-month period ending July 1, 1987.

Materials obtained from prison facilities (e.g., prison industries) are subject to the same requirements for Federal-aid participation that are imposed upon materials acquired from other sources. Materials manufactured or produced by convict labor will be given no preferential treatment.

The preferred method of obtaining materials for a project is through normal contracting procedures which require the contractor to furnish all materials to be incorporated in the work. The contractor selects the source, public or private, from which the materials are to be obtained (23 CFR 635.407). Prison industries are prohibited from bidding on projects directly (23 CFR 635.112e), but may act as material supplier to construction contractors.

Prison materials may also be approved as State-furnished material. However, since public agencies may not bid in competition with private firms, direct acquisition of materials from a prison industry for use as State-furnished material is subject to a public interest finding with the Division Administrator's concurrence (23 CFR 635.407d). Selection of materials produced by convict labor as State-furnished materials for mandatory use should be cleared prior to the submittal of the Plans Specifications & Estimates (PS&E).

b. Patented/Proprietary Products References: 23 U.S.C. 112, 23 CFR 635.411

FHWA will not participate, directly or indirectly, in payment for any premium or royalty on any patented or proprietary material, specification, or process specifically set forth in the plans and specifications for a project, unless:

- the item is purchased or obtained through competitive bidding with equally suitable unpatented items,
- the STA certifies either that the proprietary or patented item is essential for synchronization with the existing highway facilities or that no equally suitable alternative exists, or
- the item is used for research or for a special type of construction on relatively short sections of road for experimental purposes. States should follow FHWA's procedures for "Construction Projects Incorporating Experimental Features" (expermnt.htm) for the submittal of work plans and evaluations.

The primary purpose of the policy is to have competition in selection of materials and allow for development of new materials and products. The policy further permits materials and products that are judged equal may be bid under generic specifications. If only patented or proprietary products are acceptable, they shall be bid as alternatives with all, or at least a

reasonable number of, acceptable materials or products listed; and the Division Administrator may approve a single source if it can be found that its utilization is in the public interest.

Trade names are generally the key to identifying patented or proprietary materials. Trade name examples include 3M, Corten, etc. Generally, products identified by their brand or trade name are not to be specified without an "or equal" phrase, and, if trade names are used, all, or at least a reasonable number of acceptable "equal" materials or products should be listed. The licensing of several suppliers to produce a product does not change the fact that it is a single product and should not be specified to the exclusion of other equally suitable products.

c. State Preference References: 23 U.S.C. 112, 23 CFR 635.409

Materials produced within Maine shall not be favored to the exclusion of comparable materials produced outside of Maine. State preference clauses give particular advantage to the designated source and thus restrict competition. Therefore, State preference provisions shall not be used on any Federal-aid construction projects.

This policy also applies to State preference actions against materials of foreign origin, except as otherwise permitted by Federal law. Thus, States cannot give preference to in-State material sources over foreign material sources. Under the Buy America provisions, the States are permitted to expand the Buy America restrictions provided that the STA is legally authorized under State law to impose more stringent requirements.

d. State Owned/Furnished/Designated Materials References: 23 U.S.C. 112, 23 CFR 635.407

Current FHWA policy requires that the contractor must furnish all materials to be incorporated in the work, and the contractor shall be permitted to select the sources from which the materials are to be obtained. Exceptions to this requirement may be made when there is a definite finding, by MaineDOT and concurred in by Federal Highway Administration's (FHWA) Division Administrator, that it is in the public interest to require the contractor to use materials furnished by the MaineDOT or from sources designated by MaineDOT. The exception policy can best be understood by separating State-furnished materials into the categories of manufactured materials and local natural materials.

Manufactured Materials When the use of State-furnished manufactured materials is approved based on a public interest finding, such use must be made mandatory. The optional use of State-furnished manufactured materials is in violation of our policy prohibiting public agencies from competing with private firms. Manufactured materials to be furnished by MaineDOT must be acquired through competitive bidding, unless there is a public interest finding for another method, and concurred in by FHWA's Division Administrator.

Local Natural Materials When MaineDOT owns or controls a local natural materials source such as a borrow pit or a stockpile of salvaged pavement material, etc., the materials may be designated for either optional or mandatory use; however, mandatory use will require a public interest finding (PIF) and FHWA's Division Administrator's concurrence.

In order to permit prospective bidders to properly prepare their bids, the location, cost, and any conditions to be met for obtaining materials that are made available to the contractor shall be stated in the bidding documents.

Mandatory Disposal Sites Normally, the disposal site for surplus excavated materials is to be of the contractor's choosing; although, an optional site(s) may be shown in the contract provisions. A mandatory site shall be specified when there is a finding by MaineDOT, with the concurrence of the Division Administrator, that such placement is the most economical or that the environment would be substantially enhanced without excessive cost. Discussion of the mandatory use of a disposal site in the environmental document may serve as the basis for the public interest finding.

Summarizing FHWA policy for the mandatory use of borrow or disposal sites:

- mandatory use of either requires a public interest finding and FHWA's Division Administrator's concurrence,
- mandatory use of either may be based on environmental consideration where the environment will be substantially enhanced without excessive additional cost, and
- where the use is based on environmental considerations, the discussion in the environmental document may be used as the basis for the public interest finding.

Factors to justify a public interest finding should include such items as cost effectiveness, system integrity, and local shortages of material.

C. Standard FHWA Contract Provisions - FHWA 1273

Unless expressly otherwise provided in the Bid Documents, the following "Required Contract Provisions, Federal Aid Construction Contracts", FHWA-1273, are hereby incorporated into the Bid Documents and Contract.
****

Start of FHWA 1273 REQUIRED CONTRACT PROVISIONS
FEDERAL-AID CONSTRUCTION CONTRACTS (As revised through May 1, 2012)

FHWA-1273 -- Revised May 1, 2012

REQUIRED CONTRACT PROVISIONS
FEDERAL-AID CONSTRUCTION CONTRACTS

I. General
II. Nondiscrimination

III. Nonsegregated Facilities
IV. Davis-Bacon and Related Act Provisions
V. Contract Work Hours and Safety Standards Act Provisions
VI. Subletting or Assigning the Contract
VII. Safety: Accident Prevention
VIII. False Statements Concerning Highway Projects
IX. Implementation of Clean Air Act and Federal Water Pollution Control Act
X. Compliance with Governmentwide Suspension and Debarment Requirements
XI. Certification Regarding Use of Contract Funds for Lobbying

ATTACHMENTS

A. Employment and Materials Preference for Appalachian Development Highway System or Appalachian Local Access Road Contracts (included in Appalachian contracts only)

I. GENERAL

1. Form FHWA-1273 must be physically incorporated in each construction contract funded under Title 23 (excluding emergency contracts solely intended for debris removal). The contractor (or subcontractor) must insert this form in each subcontract and further require its inclusion in all lower tier subcontracts (excluding purchase orders, rental agreements and other agreements for supplies or services).

The applicable requirements of Form FHWA-1273 are incorporated by reference for work done under any purchase order, rental agreement or agreement for other services. The prime contractor shall be responsible for compliance by any subcontractor, lower-tier subcontractor or service provider.

Form FHWA-1273 must be included in all Federal-aid design-build contracts, in all subcontracts and in lower tier subcontracts (excluding subcontracts for design services, purchase orders, rental agreements and other agreements for supplies or services). The design-builder shall be responsible for compliance by any subcontractor, lower-tier subcontractor or service provider.

Contracting agencies may reference Form FHWA-1273 in bid proposal or request for proposal documents, however, the Form FHWA-1273 must be physically incorporated (not referenced) in all contracts, subcontracts and lower-tier subcontracts (excluding purchase orders, rental agreements and other agreements for supplies or services related to a construction contract).

2. Subject to the applicability criteria noted in the following sections, these contract provisions shall apply to all work performed on the contract by the contractor's own organization and with the assistance of workers under the contractor's immediate superintendence and to all work performed on the contract by piecework, station work, or by subcontract.

3. A breach of any of the stipulations contained in these Required Contract Provisions may be sufficient grounds for withholding of progress payments, withholding of final payment, termination of the contract, suspension / debarment or any other action determined to be appropriate by the contracting agency and FHWA.

4. Selection of Labor: During the performance of this contract, the contractor shall not use convict labor for any purpose within the limits of a construction project on a Federal-aid highway unless it is labor performed by convicts who are on parole, supervised release, or probation. The term Federal-aid highway does not include roadways functionally classified as local roads or rural minor collectors.

II. NONDISCRIMINATION

The provisions of this section related to 23 CFR Part 230 are applicable to all Federal-aid construction contracts and to all related construction subcontracts of $10,000 or more. The provisions of 23 CFR Part 230 are not applicable to material supply, engineering, or architectural service contracts.

In addition, the contractor and all subcontractors must comply with the following policies: Executive Order 11246, 41 CFR 60, 29 CFR 1625-1627, Title 23 USC Section 140, the Rehabilitation Act of 1973, as amended (29 USC 794), Title VI of the Civil Rights Act of 1964, as amended, and related regulations including 49 CFR Parts 21, 26 and 27; and 23 CFR Parts 200, 230, and 633.

The contractor and all subcontractors must comply with: the requirements of the Equal Opportunity Clause in 41 CFR 60-1.4(b) and, for all construction contracts exceeding $10,000, the Standard Federal Equal Employment Opportunity Construction Contract Specifications in 41 CFR 60-4.3.

Note: The U.S. Department of Labor has exclusive authority to determine compliance with Executive Order 11246 and the policies of the Secretary of Labor including 41 CFR 60, and 29 CFR 1625-1627. The contracting agency and the FHWA have the authority and the responsibility to ensure compliance with Title 23 USC Section 140, the Rehabilitation Act of 1973, as amended (29 USC 794), and Title VI of the Civil Rights Act of 1964, as amended, and related regulations including 49 CFR Parts 21, 26 and 27; and 23 CFR Parts 200, 230, and 633.

The following provision is adopted from 23 CFR 230, Appendix A, with appropriate revisions to conform to the U.S. Department of Labor (US DOL) and FHWA requirements.

1. Equal Employment Opportunity: Equal employment opportunity (EEO) requirements not to discriminate and to take affirmative action to assure equal opportunity as set forth under laws, executive orders, rules, regulations (28 CFR 35, 29 CFR 1630, 29 CFR 1625-1627, 41 CFR 60 and 49 CFR 27) and orders of the Secretary of Labor as modified by the provisions prescribed herein, and imposed pursuant to 23 U.S.C. 140 shall constitute the EEO and specific affirmative action standards for the contractor's project activities under this contract. The provisions of the Americans with Disabilities Act of 1990 (42 U.S.C. 12101 et seq.) set forth under 28 CFR 35 and 29 CFR 1630 are incorporated by reference in this contract. In the execution of this contract, the contractor agrees to comply with the following minimum specific requirement activities of EEO:

a. The contractor will work with the contracting agency and the Federal Government to ensure that it has made every good faith effort to provide equal opportunity with respect to all of its terms and conditions of employment and in their review of activities under the contract.

b. The contractor will accept as its operating policy the following statement:

"It is the policy of this Company to assure that applicants are employed, and that employees are treated during employment, without regard to their race, religion, sex, color, national origin, age or disability. Such action shall include: employment, upgrading, demotion, or transfer; recruitment or recruitment advertising; layoff or termination; rates of pay or other forms of compensation; and selection for training, including apprenticeship, pre-apprenticeship, and/or on-the-job training."

2. EEO Officer: The contractor will designate and make known to the contracting officers an EEO Officer who will have the responsibility for and must be capable of effectively administering and promoting an active EEO program and who must be assigned adequate authority and responsibility to do so.

3. Dissemination of Policy: All members of the contractor's staff who are authorized to hire, supervise, promote, and discharge employees, or who recommend such action, or who are substantially involved in such action, will be made fully cognizant of, and will implement, the contractor's EEO policy and contractual responsibilities to provide EEO in each grade and classification of employment. To ensure that the above agreement will be met, the following actions will be taken as a minimum:

a. Periodic meetings of supervisory and personnel office employees will be conducted before the start of work and then not less often than once every six months, at which time the contractor's EEO policy and its implementation will be reviewed and explained. The meetings will be conducted by the EEO Officer.

b. All new supervisory or personnel office employees will be given a thorough indoctrination by the EEO Officer, covering all major aspects of the contractor's EEO obligations within thirty days following their reporting for duty with the contractor.

c. All personnel who are engaged in direct recruitment for the project will be instructed by the EEO Officer in the contractor's procedures for locating and hiring minorities and women.

d. Notices and posters setting forth the contractor's EEO policy will be placed in areas readily accessible to employees, applicants for employment and potential employees.

e. The contractor's EEO policy and the procedures to implement such policy will be brought to the attention of employees by means of meetings, employee handbooks, or other appropriate means.

4. Recruitment: When advertising for employees, the contractor will include in all advertisements for employees the notation: "An Equal Opportunity Employer." All such advertisements will be placed in publications having a large circulation among minorities and women in the area from which the project work force would normally be derived.

a. The contractor will, unless precluded by a valid bargaining agreement, conduct systematic and direct recruitment through public and private employee referral sources likely to yield

qualified minorities and women. To meet this requirement, the contractor will identify sources of potential minority group employees, and establish with such identified sources procedures whereby minority and women applicants may be referred to the contractor for employment consideration.

b. In the event the contractor has a valid bargaining agreement providing for exclusive hiring hall referrals, the contractor is expected to observe the provisions of that agreement to the extent that the system meets the contractor's compliance with EEO contract provisions. Where implementation of such an agreement has the effect of discriminating against minorities or women, or obligates the contractor to do the same, such implementation violates Federal nondiscrimination provisions.

c. The contractor will encourage its present employees to refer minorities and women as applicants for employment. Information and procedures with regard to referring such applicants will be discussed with employees.

5. Personnel Actions: Wages, working conditions, and employee benefits shall be established and administered, and personnel actions of every type, including hiring, upgrading, promotion, transfer, demotion, layoff, and termination, shall be taken without regard to race, color, religion, sex, national origin, age or disability. The following procedures shall be followed:

a. The contractor will conduct periodic inspections of project sites to insure that working conditions and employee facilities do not indicate discriminatory treatment of project site personnel.

b. The contractor will periodically evaluate the spread of wages paid within each classification to determine any evidence of discriminatory wage practices.

c. The contractor will periodically review selected personnel actions in depth to determine whether there is evidence of discrimination. Where evidence is found, the contractor will promptly take corrective action. If the review indicates that the discrimination may extend beyond the actions reviewed, such corrective action shall include all affected persons.

d. The contractor will promptly investigate all complaints of alleged discrimination made to the contractor in connection with its obligations under this contract, will attempt to resolve such complaints, and will take appropriate corrective action within a reasonable time. If the investigation indicates that the discrimination may affect persons other than the complainant, such corrective action shall include such other persons. Upon completion of each investigation, the contractor will inform every complainant of all of their avenues of appeal.

6. Training and Promotion:

a. The contractor will assist in locating, qualifying, and increasing the skills of minorities and women who are applicants for employment or current employees. Such efforts should be aimed at developing full journey level status employees in the type of trade or job classification involved.

b. Consistent with the contractor's work force requirements and as permissible under Federal and State regulations, the contractor shall make full use of training programs, i.e., apprenticeship, and on-the-job training programs for the geographical area of contract performance. In the event a special provision for training is provided under this contract, this subparagraph will be superseded as indicated in the special provision. The contracting agency may reserve training positions for persons who receive welfare assistance in accordance with 23 U.S.C. 140(a).

c. The contractor will advise employees and applicants for employment of available training programs and entrance requirements for each.

d. The contractor will periodically review the training and promotion potential of employees who are minorities and women and will encourage eligible employees to apply for such training and promotion.

7. Unions: If the contractor relies in whole or in part upon unions as a source of employees, the contractor will use good faith efforts to obtain the cooperation of such unions to increase opportunities for minorities and women. Actions by the contractor, either directly or through a contractor's association acting as agent, will include the procedures set forth below:

a. The contractor will use good faith efforts to develop, in cooperation with the unions, joint training programs aimed toward qualifying more minorities and women for membership in the unions and increasing the skills of minorities and women so that they may qualify for higher paying employment.

b. The contractor will use good faith efforts to incorporate an EEO clause into each union agreement to the end that such union will be contractually bound to refer applicants without regard to their race, color, religion, sex, national origin, age or disability.

c. The contractor is to obtain information as to the referral practices and policies of the labor union except that to the extent such information is within the exclusive possession of the labor union and such labor union refuses to furnish such information to the contractor, the contractor shall so certify to the contracting agency and shall set forth what efforts have been made to obtain such information.

d. In the event the union is unable to provide the contractor with a reasonable flow of referrals within the time limit set forth in the collective bargaining agreement, the contractor will, through independent recruitment efforts, fill the employment vacancies without regard to race, color, religion, sex, national origin, age or disability; making full efforts to obtain qualified and/or qualifiable minorities and women. The failure of a union to provide sufficient referrals (even though it is obligated to provide exclusive referrals under the terms of a collective bargaining agreement) does not relieve the contractor from the requirements of this paragraph. In the event the union referral practice prevents the contractor from meeting the obligations pursuant to Executive Order 11246, as amended, and these special provisions, such contractor shall immediately notify the contracting agency.

8. Reasonable Accommodation for Applicants / Employees with Disabilities: The contractor must be familiar with the requirements for and comply with the Americans with

Disabilities Act and all rules and regulations established there under. Employers must provide reasonable accommodation in all employment activities unless to do so would cause an undue hardship.

9. Selection of Subcontractors, Procurement of Materials and Leasing of Equipment: The contractor shall not discriminate on the grounds of race, color, religion, sex, national origin, age or disability in the selection and retention of subcontractors, including procurement of materials and leases of equipment. The contractor shall take all necessary and reasonable steps to ensure nondiscrimination in the administration of this contract.

a. The contractor shall notify all potential subcontractors and suppliers and lessors of their EEO obligations under this contract.

b. The contractor will use good faith efforts to ensure subcontractor compliance with their EEO obligations.

10. Assurance Required by 49 CFR 26.13(b):

a. The requirements of 49 CFR Part 26 and the State DOT's U.S. DOT-approved DBE program are incorporated by reference.

b. The contractor or subcontractor shall not discriminate on the basis of race, color, national origin, or sex in the performance of this contract. The contractor shall carry out applicable requirements of 49 CFR Part 26 in the award and administration of DOT-assisted contracts. Failure by the contractor to carry out these requirements is a material breach of this contract, which may result in the termination of this contract or such other remedy as the contracting agency deems appropriate.

11. Records and Reports: The contractor shall keep such records as necessary to document compliance with the EEO requirements. Such records shall be retained for a period of three years following the date of the final payment to the contractor for all contract work and shall be available at reasonable times and places for inspection by authorized representatives of the contracting agency and the FHWA.

a. The records kept by the contractor shall document the following:

(1) The number and work hours of minority and non-minority group members and women employed in each work classification on the project;

(2) The progress and efforts being made in cooperation with unions, when applicable, to increase employment opportunities for minorities and women; and

(3) The progress and efforts being made in locating, hiring, training, qualifying, and upgrading minorities and women;

b. The contractors and subcontractors will submit an annual report to the contracting agency each July for the duration of the project, indicating the number of minority, women, and non-

minority group employees currently engaged in each work classification required by the contract work. This information is to be reported on Form FHWA-1391. The staffing data should represent the project work force on board in all or any part of the last payroll period preceding the end of July. If on-the-job training is being required by special provision, the contractor will be required to collect and report training data. The employment data should reflect the work force on board during all or any part of the last payroll period preceding the end of July.

III. NONSEGREGATED FACILITIES

This provision is applicable to all Federal-aid construction contracts and to all related construction subcontracts of $10,000 or more.

The contractor must ensure that facilities provided for employees are provided in such a manner that segregation on the basis of race, color, religion, sex, or national origin cannot result. The contractor may neither require such segregated use by written or oral policies nor tolerate such use by employee custom. The contractor's obligation extends further to ensure that its employees are not assigned to perform their services at any location, under the contractor's control, where the facilities are segregated. The term "facilities" includes waiting rooms, work areas, restaurants and other eating areas, time clocks, restrooms, washrooms, locker rooms, and other storage or dressing areas, parking lots, drinking fountains, recreation or entertainment areas, transportation, and housing provided for employees. The contractor shall provide separate or single-user restrooms and necessary dressing or sleeping areas to assure privacy between sexes.

IV. DAVIS-BACON AND RELATED ACT PROVISIONS

This section is applicable to all Federal-aid construction projects exceeding $2,000 and to all related subcontracts and lower-tier subcontracts (regardless of subcontract size). The requirements apply to all projects located within the right-of-way of a roadway that is functionally classified as Federal-aid highway. This excludes roadways functionally classified as local roads or rural minor collectors, which are exempt. Contracting agencies may elect to apply these requirements to other projects.

The following provisions are from the U.S. Department of Labor regulations in 29 CFR 5.5 “Contract provisions and related matters” with minor revisions to conform to the FHWA-1273 format and FHWA program requirements.

1. Minimum wages

a. All laborers and mechanics employed or working upon the site of the work, will be paid unconditionally and not less often than once a week, and without subsequent deduction or rebate on any account (except such payroll deductions as are permitted by regulations issued by the Secretary of Labor under the Copeland Act (29 CFR part 3)), the full amount of wages and bona fide fringe benefits (or cash equivalents thereof) due at time of payment computed at rates not less than those contained in the wage determination of the Secretary of Labor which is attached hereto and made a part hereof, regardless of any contractual relationship which may be alleged to exist between the contractor and such laborers and mechanics.

Contributions made or costs reasonably anticipated for bona fide fringe benefits under section 1(b)(2) of the Davis-Bacon Act on behalf of laborers or mechanics are considered wages paid to

such laborers or mechanics, subject to the provisions of paragraph 1.d. of this section; also, regular contributions made or costs incurred for more than a weekly period (but not less often than quarterly) under plans, funds, or programs which cover the particular weekly period, are deemed to be constructively made or incurred during such weekly period. Such laborers and mechanics shall be paid the appropriate wage rate and fringe benefits on the wage determination for the classification of work actually performed, without regard to skill, except as provided in 29 CFR 5.5(a)(4). Laborers or mechanics performing work in more than one classification may be compensated at the rate specified for each classification for the time actually worked therein: Provided, That the employer's payroll records accurately set forth the time spent in each classification in which work is performed. The wage determination (including any additional classification and wage rates conformed under paragraph 1.b. of this section) and the Davis-Bacon poster (WH–1321) shall be posted at all times by the contractor and its subcontractors at the site of the work in a prominent and accessible place where it can be easily seen by the workers.

b. (1) The contracting officer shall require that any class of laborers or mechanics, including helpers, which is not listed in the wage determination and which is to be employed under the contract shall be classified in conformance with the wage determination. The contracting officer shall approve an additional classification and wage rate and fringe benefits therefore only when the following criteria have been met:

(i) The work to be performed by the classification requested is not performed by a classification in the wage determination; and

(ii) The classification is utilized in the area by the construction industry; and

(iii) The proposed wage rate, including any bona fide fringe benefits, bears a reasonable relationship to the wage rates contained in the wage determination.

(2) If the contractor and the laborers and mechanics to be employed in the classification (if known), or their representatives, and the contracting officer agree on the classification and wage rate (including the amount designated for fringe benefits where appropriate), a report of the action taken shall be sent by the contracting officer to the Administrator of the Wage and Hour Division, Employment Standards Administration, U.S. Department of Labor, Washington, DC 20210. The Administrator, or an authorized representative, will approve, modify, or disapprove every additional classification action within 30 days of receipt and so advise the contracting officer or will notify the contracting officer within the 30-day period that additional time is necessary.

(3) In the event the contractor, the laborers or mechanics to be employed in the classification or their representatives, and the contracting officer do not agree on the proposed classification and wage rate (including the amount designated for fringe benefits, where appropriate), the contracting officer shall refer the questions, including the views of all interested parties and the recommendation of the contracting officer, to the Wage and Hour Administrator for determination. The Wage and Hour Administrator, or an authorized representative, will issue a determination within 30 days of receipt and so advise the contracting officer or will notify the contracting officer within the 30-day period that additional time is necessary.

(4) The wage rate (including fringe benefits where appropriate) determined pursuant to paragraphs 1.b.(2) or 1.b.(3) of this section, shall be paid to all workers performing work in the

classification under this contract from the first day on which work is performed in the classification.

c. Whenever the minimum wage rate prescribed in the contract for a class of laborers or mechanics includes a fringe benefit which is not expressed as an hourly rate, the contractor shall either pay the benefit as stated in the wage determination or shall pay another bona fide fringe benefit or an hourly cash equivalent thereof.

d. If the contractor does not make payments to a trustee or other third person, the contractor may consider as part of the wages of any laborer or mechanic the amount of any costs reasonably anticipated in providing bona fide fringe benefits under a plan or program, Provided, That the Secretary of Labor has found, upon the written request of the contractor, that the applicable standards of the Davis-Bacon Act have been met. The Secretary of Labor may require the contractor to set aside in a separate account assets for the meeting of obligations under the plan or program.

2. Withholding

The contracting agency shall upon its own action or upon written request of an authorized representative of the Department of Labor, withhold or cause to be withheld from the contractor under this contract, or any other Federal contract with the same prime contractor, or any other federally-assisted contract subject to Davis-Bacon prevailing wage requirements, which is held by the same prime contractor, so much of the accrued payments or advances as may be considered necessary to pay laborers and mechanics, including apprentices, trainees, and helpers, employed by the contractor or any subcontractor the full amount of wages required by the contract. In the event of failure to pay any laborer or mechanic, including any apprentice, trainee, or helper, employed or working on the site of the work, all or part of the wages required by the contract, the contracting agency may, after written notice to the contractor, take such action as may be necessary to cause the suspension of any further payment, advance, or guarantee of funds until such violations have ceased.

3. Payrolls and basic records

a. Payrolls and basic records relating thereto shall be maintained by the contractor during the course of the work and preserved for a period of three years thereafter for all laborers and mechanics working at the site of the work. Such records shall contain the name, address, and social security number of each such worker, his or her correct classification, hourly rates of wages paid (including rates of contributions or costs anticipated for bona fide fringe benefits or cash equivalents thereof of the types described in section 1(b)(2)(B) of the Davis-Bacon Act), daily and weekly number of hours worked, deductions made and actual wages paid. Whenever the Secretary of Labor has found under 29 CFR 5.5(a)(1)(iv) that the wages of any laborer or mechanic include the amount of any costs reasonably anticipated in providing benefits under a plan or program described in section 1(b)(2)(B) of the Davis-Bacon Act, the contractor shall maintain records which show that the commitment to provide such benefits is enforceable, that the plan or program is financially responsible, and that the plan or program has been communicated in writing to the laborers or mechanics affected, and records which show the costs anticipated or the actual cost incurred in providing such benefits. Contractors employing apprentices or trainees under approved programs shall maintain written evidence of the

registration of apprenticeship programs and certification of trainee programs, the registration of the apprentices and trainees, and the ratios and wage rates prescribed in the applicable programs.

b. (1) The contractor shall submit weekly for each week in which any contract work is performed a copy of all payrolls to the contracting agency. The payrolls submitted shall set out accurately and completely all of the information required to be maintained under 29 CFR 5.5(a)(3)(i), except that full social security numbers and home addresses shall not be included on weekly transmittals. Instead the payrolls shall only need to include an individually identifying number for each employee (e.g. , the last four digits of the employee's social security number). The required weekly payroll information may be submitted in any form desired. Optional Form WH–347 is available for this purpose from the Wage and Hour Division Web site at http://www.dol.gov/esa/whd/forms/wh347instr.htm or its successor site. The prime contractor is responsible for the submission of copies of payrolls by all subcontractors. Contractors and subcontractors shall maintain the full social security number and current address of each covered worker, and shall provide them upon request to the contracting agency for transmission to the State DOT, the FHWA or the Wage and Hour Division of the Department of Labor for purposes of an investigation or audit of compliance with prevailing wage requirements. It is not a violation of this section for a prime contractor to require a subcontractor to provide addresses and social security numbers to the prime contractor for its own records, without weekly submission to the contracting agency..

(2) Each payroll submitted shall be accompanied by a “Statement of Compliance,” signed by the contractor or subcontractor or his or her agent who pays or supervises the payment of the persons employed under the contract and shall certify the following:

(i) That the payroll for the payroll period contains the information required to be provided under §5.5 (a)(3)(ii) of Regulations, 29 CFR part 5, the appropriate information is being maintained under §5.5 (a)(3)(i) of Regulations, 29 CFR part 5, and that such information is correct and complete;

(ii) That each laborer or mechanic (including each helper, apprentice, and trainee) employed on the contract during the payroll period has been paid the full weekly wages earned, without rebate, either directly or indirectly, and that no deductions have been made either directly or indirectly from the full wages earned, other than permissible deductions as set forth in Regulations, 29 CFR part 3;

(iii) That each laborer or mechanic has been paid not less than the applicable wage rates and fringe benefits or cash equivalents for the classification of work performed, as specified in the applicable wage determination incorporated into the contract.

(3) The weekly submission of a properly executed certification set forth on the reverse side of Optional Form WH–347 shall satisfy the requirement for submission of the “Statement of Compliance” required by paragraph 3.b.(2) of this section.

(4) The falsification of any of the above certifications may subject the contractor or subcontractor to civil or criminal prosecution under section 1001 of title 18 and section 231 of title 31 of the United States Code.

c. The contractor or subcontractor shall make the records required under paragraph 3.a. of this section available for inspection, copying, or transcription by authorized representatives of the

contracting agency, the State DOT, the FHWA, or the Department of Labor, and shall permit such representatives to interview employees during working hours on the job. If the contractor or subcontractor fails to submit the required records or to make them available, the FHWA may, after written notice to the contractor, the contracting agency or the State DOT, take such action as may be necessary to cause the suspension of any further payment, advance, or guarantee of funds. Furthermore, failure to submit the required records upon request or to make such records available may be grounds for debarment action pursuant to 29 CFR 5.12.

4. Apprentices and trainees

a. Apprentices (programs of the USDOL).

Apprentices will be permitted to work at less than the predetermined rate for the work they performed when they are employed pursuant to and individually registered in a bona fide apprenticeship program registered with the U.S. Department of Labor, Employment and Training Administration, Office of Apprenticeship Training, Employer and Labor Services, or with a State Apprenticeship Agency recognized by the Office, or if a person is employed in his or her first 90 days of probationary employment as an apprentice in such an apprenticeship program, who is not individually registered in the program, but who has been certified by the Office of Apprenticeship Training, Employer and Labor Services or a State Apprenticeship Agency (where appropriate) to be eligible for probationary employment as an apprentice.

The allowable ratio of apprentices to journeymen on the job site in any craft classification shall not be greater than the ratio permitted to the contractor as to the entire work force under the registered program. Any worker listed on a payroll at an apprentice wage rate, who is not registered or otherwise employed as stated above, shall be paid not less than the applicable wage rate on the wage determination for the classification of work actually performed. In addition, any apprentice performing work on the job site in excess of the ratio permitted under the registered program shall be paid not less than the applicable wage rate on the wage determination for the work actually performed. Where a contractor is performing construction on a project in a locality other than that in which its program is registered, the ratios and wage rates (expressed in percentages of the journeyman's hourly rate) specified in the contractor's or subcontractor's registered program shall be observed.

Every apprentice must be paid at not less than the rate specified in the registered program for the apprentice's level of progress, expressed as a percentage of the journeymen hourly rate specified in the applicable wage determination. Apprentices shall be paid fringe benefits in accordance with the provisions of the apprenticeship program. If the apprenticeship program does not specify fringe benefits, apprentices must be paid the full amount of fringe benefits listed on the wage determination for the applicable classification. If the Administrator determines that a different practice prevails for the applicable apprentice classification, fringes shall be paid in accordance with that determination.

In the event the Office of Apprenticeship Training, Employer and Labor Services, or a State Apprenticeship Agency recognized by the Office, withdraws approval of an apprenticeship program, the contractor will no longer be permitted to utilize apprentices at less than the applicable predetermined rate for the work performed until an acceptable program is approved.

b. Trainees (programs of the USDOL).

Except as provided in 29 CFR 5.16, trainees will not be permitted to work at less than the predetermined rate for the work performed unless they are employed pursuant to and individually registered in a program which has received prior approval, evidenced by formal certification by the U.S. Department of Labor, Employment and Training Administration.

The ratio of trainees to journeymen on the job site shall not be greater than permitted under the plan approved by the Employment and Training Administration.

Every trainee must be paid at not less than the rate specified in the approved program for the trainee's level of progress, expressed as a percentage of the journeyman hourly rate specified in the applicable wage determination. Trainees shall be paid fringe benefits in accordance with the provisions of the trainee program. If the trainee program does not mention fringe benefits, trainees shall be paid the full amount of fringe benefits listed on the wage determination unless the Administrator of the Wage and Hour Division determines that there is an apprenticeship program associated with the corresponding journeyman wage rate on the wage determination which provides for less than full fringe benefits for apprentices. Any employee listed on the payroll at a trainee rate who is not registered and participating in a training plan approved by the Employment and Training Administration shall be paid not less than the applicable wage rate on the wage determination for the classification of work actually performed. In addition, any trainee performing work on the job site in excess of the ratio permitted under the registered program shall be paid not less than the applicable wage rate on the wage determination for the work actually performed.

In the event the Employment and Training Administration withdraws approval of a training program, the contractor will no longer be permitted to utilize trainees at less than the applicable predetermined rate for the work performed until an acceptable program is approved.

c. Equal employment opportunity. The utilization of apprentices, trainees and journeymen under this part shall be in conformity with the equal employment opportunity requirements of Executive Order 11246, as amended, and 29 CFR part 30.

d. Apprentices and Trainees (programs of the U.S. DOT).

Apprentices and trainees working under apprenticeship and skill training programs which have been certified by the Secretary of Transportation as promoting EEO in connection with Federal-aid highway construction programs are not subject to the requirements of paragraph 4 of this Section IV. The straight time hourly wage rates for apprentices and trainees under such programs will be established by the particular programs. The ratio of apprentices and trainees to journeymen shall not be greater than permitted by the terms of the particular program.

5. Compliance with Copeland Act requirements. The contractor shall comply with the requirements of 29 CFR part 3, which are incorporated by reference in this contract.

6. Subcontracts. The contractor or subcontractor shall insert Form FHWA-1273 in any subcontracts and also require the subcontractors to include Form FHWA-1273 in any lower tier subcontracts. The prime contractor shall be responsible for the compliance by any subcontractor or lower tier subcontractor with all the contract clauses in 29 CFR 5.5.

7. Contract termination: debarment. A breach of the contract clauses in 29 CFR 5.5 may be grounds for termination of the contract, and for debarment as a contractor and a subcontractor as provided in 29 CFR 5.12.

8. Compliance with Davis-Bacon and Related Act requirements. All rulings and interpretations of the Davis-Bacon and Related Acts contained in 29 CFR parts 1, 3, and 5 are herein incorporated by reference in this contract.

9. Disputes concerning labor standards. Disputes arising out of the labor standards provisions of this contract shall not be subject to the general disputes clause of this contract. Such disputes shall be resolved in accordance with the procedures of the Department of Labor set forth in 29 CFR parts 5, 6, and 7. Disputes within the meaning of this clause include disputes between the contractor (or any of its subcontractors) and the contracting agency, the U.S. Department of Labor, or the employees or their representatives.

10. Certification of eligibility.

a. By entering into this contract, the contractor certifies that neither it (nor he or she) nor any person or firm who has an interest in the contractor's firm is a person or firm ineligible to be awarded Government contracts by virtue of section 3(a) of the Davis-Bacon Act or 29 CFR 5.12(a)(1).

b. No part of this contract shall be subcontracted to any person or firm ineligible for award of a Government contract by virtue of section 3(a) of the Davis-Bacon Act or 29 CFR 5.12(a)(1).

c. The penalty for making false statements is prescribed in the U.S. Criminal Code, 18 U.S.C. 1001.

V. CONTRACT WORK HOURS AND SAFETY STANDARDS ACT

The following clauses apply to any Federal-aid construction contract in an amount in excess of $100,000 and subject to the overtime provisions of the Contract Work Hours and Safety Standards Act. These clauses shall be inserted in addition to the clauses required by 29 CFR 5.5(a) or 29 CFR 4.6. As used in this paragraph, the terms laborers and mechanics include watchmen and guards.

1. Overtime requirements. No contractor or subcontractor contracting for any part of the contract work which may require or involve the employment of laborers or mechanics shall require or permit any such laborer or mechanic in any workweek in which he or she is employed on such work to work in excess of forty hours in such workweek unless such laborer or mechanic receives compensation at a rate not less than one and one-half times the basic rate of pay for all hours worked in excess of forty hours in such workweek.

2. Violation; liability for unpaid wages; liquidated damages. In the event of any violation of the clause set forth in paragraph (1.) of this section, the contractor and any subcontractor responsible therefor shall be liable for the unpaid wages. In addition, such contractor and subcontractor shall be liable to the United States (in the case of work done under contract for the District of Columbia or a territory, to such District or to such territory), for liquidated damages.

Such liquidated damages shall be computed with respect to each individual laborer or mechanic, including watchmen and guards, employed in violation of the clause set forth in paragraph (1.) of this section, in the sum of $10 for each calendar day on which such individual was required or permitted to work in excess of the standard workweek of forty hours without payment of the overtime wages required by the clause set forth in paragraph (1.) of this section.

3. Withholding for unpaid wages and liquidated damages. The FHWA or the contacting agency shall upon its own action or upon written request of an authorized representative of the Department of Labor withhold or cause to be withheld, from any moneys payable on account of work performed by the contractor or subcontractor under any such contract or any other Federal contract with the same prime contractor, or any other federally-assisted contract subject to the Contract Work Hours and Safety Standards Act, which is held by the same prime contractor, such sums as may be determined to be necessary to satisfy any liabilities of such contractor or subcontractor for unpaid wages and liquidated damages as provided in the clause set forth in paragraph (2.) of this section.

4. Subcontracts. The contractor or subcontractor shall insert in any subcontracts the clauses set forth in paragraph (1.) through (4.) of this section and also a clause requiring the subcontractors to include these clauses in any lower tier subcontracts. The prime contractor shall be responsible for compliance by any subcontractor or lower tier subcontractor with the clauses set forth in paragraphs (1.) through (4.) of this section.

VI. SUBLETTING OR ASSIGNING THE CONTRACT

This provision is applicable to all Federal-aid construction contracts on the National Highway System.

1. The contractor shall perform with its own organization contract work amounting to not less than 30 percent (or a greater percentage if specified elsewhere in the contract) of the total original contract price, excluding any specialty items designated by the contracting agency. Specialty items may be performed by subcontract and the amount of any such specialty items performed may be deducted from the total original contract price before computing the amount of work required to be performed by the contractor's own organization (23 CFR 635.116).

a. The term “perform work with its own organization” refers to workers employed or leased by the prime contractor, and equipment owned or rented by the prime contractor, with or without operators. Such term does not include employees or equipment of a subcontractor or lower tier subcontractor, agents of the prime contractor, or any other assignees. The term may include payments for the costs of hiring leased employees from an employee leasing firm meeting all relevant Federal and State regulatory requirements. Leased employees may only be included in this term if the prime contractor meets all of the following conditions:

(1) the prime contractor maintains control over the supervision of the day-to-day activities of the leased employees;

(2) the prime contractor remains responsible for the quality of the work of the leased employees;

(3) the prime contractor retains all power to accept or exclude individual employees from work on the project; and

(4) the prime contractor remains ultimately responsible for the payment of predetermined minimum wages, the submission of payrolls, statements of compliance and all other Federal regulatory requirements.

b. "Specialty Items" shall be construed to be limited to work that requires highly specialized knowledge, abilities, or equipment not ordinarily available in the type of contracting organizations qualified and expected to bid or propose on the contract as a whole and in general are to be limited to minor components of the overall contract.

2. The contract amount upon which the requirements set forth in paragraph (1) of Section VI is computed includes the cost of material and manufactured products which are to be purchased or produced by the contractor under the contract provisions.

3. The contractor shall furnish (a) a competent superintendent or supervisor who is employed by the firm, has full authority to direct performance of the work in accordance with the contract requirements, and is in charge of all construction operations (regardless of who performs the work) and (b) such other of its own organizational resources (supervision, management, and engineering services) as the contracting officer determines is necessary to assure the performance of the contract.

4. No portion of the contract shall be sublet, assigned or otherwise disposed of except with the written consent of the contracting officer, or authorized representative, and such consent when given shall not be construed to relieve the contractor of any responsibility for the fulfillment of the contract. Written consent will be given only after the contracting agency has assured that each subcontract is evidenced in writing and that it contains all pertinent provisions and requirements of the prime contract.

5. The 30% self-performance requirement of paragraph (1) is not applicable to design-build contracts; however, contracting agencies may establish their own self-performance requirements.

VII. SAFETY: ACCIDENT PREVENTION

This provision is applicable to all Federal-aid construction contracts and to all related subcontracts.

1. In the performance of this contract the contractor shall comply with all applicable Federal, State, and local laws governing safety, health, and sanitation (23 CFR 635). The contractor shall provide all safeguards, safety devices and protective equipment and take any other needed actions as it determines, or as the contracting officer may determine, to be reasonably necessary to protect the life and health of employees on the job and the safety of the public and to protect property in connection with the performance of the work covered by the contract.

2. It is a condition of this contract, and shall be made a condition of each subcontract, which the contractor enters into pursuant to this contract, that the contractor and any subcontractor shall not

permit any employee, in performance of the contract, to work in surroundings or under conditions which are unsanitary, hazardous or dangerous to his/her health or safety, as determined under construction safety and health standards (29 CFR 1926) promulgated by the Secretary of Labor, in accordance with Section 107 of the Contract Work Hours and Safety Standards Act (40 U.S.C. 3704).

3. Pursuant to 29 CFR 1926.3, it is a condition of this contract that the Secretary of Labor or authorized representative thereof, shall have right of entry to any site of contract performance to inspect or investigate the matter of compliance with the construction safety and health standards and to carry out the duties of the Secretary under Section 107 of the Contract Work Hours and Safety Standards Act (40 U.S.C.3704).

VIII. FALSE STATEMENTS CONCERNING HIGHWAY PROJECTS

This provision is applicable to all Federal-aid construction contracts and to all related subcontracts.

In order to assure high quality and durable construction in conformity with approved plans and specifications and a high degree of reliability on statements and representations made by engineers, contractors, suppliers, and workers on Federal-aid highway projects, it is essential that all persons concerned with the project perform their functions as carefully, thoroughly, and honestly as possible. Willful falsification, distortion, or misrepresentation with respect to any facts related to the project is a violation of Federal law. To prevent any misunderstanding regarding the seriousness of these and similar acts, Form FHWA-1022 shall be posted on each Federal-aid highway project (23 CFR 635) in one or more places where it is readily available to all persons concerned with the project:

18 U.S.C. 1020 reads as follows:

"Whoever, being an officer, agent, or employee of the United States, or of any State or Territory, or whoever, whether a person, association, firm, or corporation, knowingly makes any false statement, false representation, or false report as to the character, quality, quantity, or cost of the material used or to be used, or the quantity or quality of the work performed or to be performed, or the cost thereof in connection with the submission of plans, maps, specifications, contracts, or costs of construction on any highway or related project submitted for approval to the Secretary of Transportation; or

Whoever knowingly makes any false statement, false representation, false report or false claim with respect to the character, quality, quantity, or cost of any work performed or to be performed, or materials furnished or to be furnished, in connection with the construction of any highway or related project approved by the Secretary of Transportation; or

Whoever knowingly makes any false statement or false representation as to material fact in any statement, certificate, or report submitted pursuant to provisions of the Federal-aid Roads Act approved July 1, 1916, (39 Stat. 355), as amended and supplemented;

Shall be fined under this title or imprisoned not more than 5 years or both."

IX. IMPLEMENTATION OF CLEAN AIR ACT AND FEDERAL WATER POLLUTION CONTROL ACT

This provision is applicable to all Federal-aid construction contracts and to all related subcontracts.

By submission of this bid/proposal or the execution of this contract, or subcontract, as appropriate, the bidder, proposer, Federal-aid construction contractor, or subcontractor, as appropriate, will be deemed to have stipulated as follows:

1. That any person who is or will be utilized in the performance of this contract is not prohibited from receiving an award due to a violation of Section 508 of the Clean Water Act or Section 306 of the Clean Air Act.
2. That the contractor agrees to include or cause to be included the requirements of paragraph (1) of this Section X in every subcontract, and further agrees to take such action as the contracting agency may direct as a means of enforcing such requirements.

X. CERTIFICATION REGARDING DEBARMENT, SUSPENSION, INELIGIBILITY AND VOLUNTARY EXCLUSION

This provision is applicable to all Federal-aid construction contracts, design-build contracts, subcontracts, lower-tier subcontracts, purchase orders, lease agreements, consultant contracts or any other covered transaction requiring FHWA approval or that is estimated to cost $25,000 or more – as defined in 2 CFR Parts 180 and 1200.

1**. Instructions for Certification – First Tier Participants:**

a. By signing and submitting this proposal, the prospective first tier participant is providing the certification set out below.

b. The inability of a person to provide the certification set out below will not necessarily result in denial of participation in this covered transaction. The prospective first tier participant shall submit an explanation of why it cannot provide the certification set out below. The certification or explanation will be considered in connection with the department or agency's determination whether to enter into this transaction. However, failure of the prospective first tier participant to furnish a certification or an explanation shall disqualify such a person from participation in this transaction.

c. The certification in this clause is a material representation of fact upon which reliance was placed when the contracting agency determined to enter into this transaction. If it is later determined that the prospective participant knowingly rendered an erroneous certification, in addition to other remedies available to the Federal Government, the contracting agency may terminate this transaction for cause of default.

d. The prospective first tier participant shall provide immediate written notice to the contracting agency to whom this proposal is submitted if any time the prospective first tier participant learns that its certification was erroneous when submitted or has become erroneous by reason of changed circumstances.

e. The terms "covered transaction," "debarred," "suspended," "ineligible," "participant," "person," "principal," and "voluntarily excluded," as used in this clause, are defined in 2 CFR Parts 180 and 1200. “First Tier Covered Transactions” refers to any covered transaction between a grantee or subgrantee of Federal funds and a participant (such as the prime or general contract). “Lower Tier Covered Transactions” refers to any covered transaction under a First Tier Covered Transaction (such as subcontracts). “First Tier Participant” refers to the participant who has entered into a covered transaction with a grantee or subgrantee of Federal funds (such as the prime or general contractor). “Lower Tier Participant” refers any participant who has entered into a covered transaction with a First Tier Participant or other Lower Tier Participants (such as subcontractors and suppliers).

f. The prospective first tier participant agrees by submitting this proposal that, should the proposed covered transaction be entered into, it shall not knowingly enter into any lower tier covered transaction with a person who is debarred, suspended, declared ineligible, or voluntarily excluded from participation in this covered transaction, unless authorized by the department or agency entering into this transaction.

g. The prospective first tier participant further agrees by submitting this proposal that it will include the clause titled "Certification Regarding Debarment, Suspension, Ineligibility and Voluntary Exclusion-Lower Tier Covered Transactions," provided by the department or contracting agency, entering into this covered transaction, without modification, in all lower tier covered transactions and in all solicitations for lower tier covered transactions exceeding the $25,000 threshold.

h. A participant in a covered transaction may rely upon a certification of a prospective participant in a lower tier covered transaction that is not debarred, suspended, ineligible, or voluntarily excluded from the covered transaction, unless it knows that the certification is erroneous. A participant is responsible for ensuring that its principals are not suspended, debarred, or otherwise ineligible to participate in covered transactions. To verify the eligibility of its principals, as well as the eligibility of any lower tier prospective participants, each participant may, but is not required to, check the Excluded Parties List System website (https://www.epls.gov/), which is compiled by the General Services Administration.

i. Nothing contained in the foregoing shall be construed to require the establishment of a system of records in order to render in good faith the certification required by this clause. The knowledge and information of the prospective participant is not required to exceed that which is normally possessed by a prudent person in the ordinary course of business dealings.

j. Except for transactions authorized under paragraph (f) of these instructions, if a participant in a covered transaction knowingly enters into a lower tier covered transaction with a person who is suspended, debarred, ineligible, or voluntarily excluded from participation in this transaction, in addition to other remedies available to the Federal Government, the department or agency may terminate this transaction for cause or default.

* * * * *

2. Certification Regarding Debarment, Suspension, Ineligibility and Voluntary Exclusion – First Tier Participants:

a. The prospective first tier participant certifies to the best of its knowledge and belief, that it and its principals:

(1) Are not presently debarred, suspended, proposed for debarment, declared ineligible, or voluntarily excluded from participating in covered transactions by any Federal department or agency;

(2) Have not within a three-year period preceding this proposal been convicted of or had a civil judgment rendered against them for commission of fraud or a criminal offense in connection with obtaining, attempting to obtain, or performing a public (Federal, State or local) transaction or contract under a public transaction; violation of Federal or State antitrust statutes or commission of embezzlement, theft, forgery, bribery, falsification or destruction of records, making false statements, or receiving stolen property;

(3) Are not presently indicted for or otherwise criminally or civilly charged by a governmental entity (Federal, State or local) with commission of any of the offenses enumerated in paragraph (a)(2) of this certification; and

(4) Have not within a three-year period preceding this application/proposal had one or more public transactions (Federal, State or local) terminated for cause or default.

b. Where the prospective participant is unable to certify to any of the statements in this certification, such prospective participant shall attach an explanation to this proposal.

2. **Instructions for Certification - Lower Tier Participants:**

(Applicable to all subcontracts, purchase orders and other lower tier transactions requiring prior FHWA approval or estimated to cost $25,000 or more - 2 CFR Parts 180 and 1200)

a. By signing and submitting this proposal, the prospective lower tier is providing the certification set out below.

b. The certification in this clause is a material representation of fact upon which reliance was placed when this transaction was entered into. If it is later determined that the prospective lower tier participant knowingly rendered an erroneous certification, in addition to other remedies available to the Federal Government, the department, or agency with which this transaction originated may pursue available remedies, including suspension and/or debarment.

c. The prospective lower tier participant shall provide immediate written notice to the person to which this proposal is submitted if at any time the prospective lower tier participant learns that its certification was erroneous by reason of changed circumstances.

d. The terms "covered transaction," "debarred," "suspended," "ineligible," "participant," "person," "principal," and "voluntarily excluded," as used in this clause, are defined in 2 CFR Parts 180 and 1200. You may contact the person to which this proposal is submitted for assistance in obtaining a copy of those regulations. “First Tier Covered Transactions” refers to any covered transaction between a grantee or subgrantee of Federal funds and a participant (such as the prime or general contract). “Lower Tier Covered Transactions” refers to any covered transaction under a First Tier Covered Transaction (such as subcontracts). “First Tier Participant” refers to the participant who has entered into a covered transaction with a grantee or subgrantee of Federal funds (such as the prime or general contractor). “Lower Tier Participant” refers any participant who has entered into a covered transaction with a First Tier Participant or other Lower Tier Participants (such as subcontractors and suppliers).

e. The prospective lower tier participant agrees by submitting this proposal that, should the proposed covered transaction be entered into, it shall not knowingly enter into any lower tier covered transaction with a person who is debarred, suspended, declared ineligible, or voluntarily excluded from participation in this covered transaction, unless authorized by the department or agency with which this transaction originated.

f. The prospective lower tier participant further agrees by submitting this proposal that it will include this clause titled "Certification Regarding Debarment, Suspension, Ineligibility and Voluntary Exclusion-Lower Tier Covered Transaction," without modification, in all lower tier covered transactions and in all solicitations for lower tier covered transactions exceeding the $25,000 threshold.

g. A participant in a covered transaction may rely upon a certification of a prospective participant in a lower tier covered transaction that is not debarred, suspended, ineligible, or voluntarily excluded from the covered transaction, unless it knows that the certification is erroneous. A participant is responsible for ensuring that its principals are not suspended, debarred, or otherwise ineligible to participate in covered transactions. To verify the eligibility of its principals, as well as the eligibility of any lower tier prospective participants, each participant may, but is not required to, check the Excluded Parties List System website (https://www.epls.gov/), which is compiled by the General Services Administration.

h. Nothing contained in the foregoing shall be construed to require establishment of a system of records in order to render in good faith the certification required by this clause. The knowledge and information of participant is not required to exceed that which is normally possessed by a prudent person in the ordinary course of business dealings.

i. Except for transactions authorized under paragraph e of these instructions, if a participant in a covered transaction knowingly enters into a lower tier covered transaction with a person who is suspended, debarred, ineligible, or voluntarily excluded from participation in this transaction, in addition to other remedies available to the Federal Government, the department or agency with which this transaction originated may pursue available remedies, including suspension and/or debarment.

* * * * *

Certification Regarding Debarment, Suspension, Ineligibility and Voluntary Exclusion--Lower Tier Participants:

1. The prospective lower tier participant certifies, by submission of this proposal, that neither it nor its principals is presently debarred, suspended, proposed for debarment, declared ineligible, or voluntarily excluded from participating in covered transactions by any Federal department or agency.

2. Where the prospective lower tier participant is unable to certify to any of the statements in this certification, such prospective participant shall attach an explanation to this proposal.

* * * * *

XI. CERTIFICATION REGARDING USE OF CONTRACT FUNDS FOR LOBBYING

This provision is applicable to all Federal-aid construction contracts and to all related subcontracts which exceed $100,000 (49 CFR 20).

1. The prospective participant certifies, by signing and submitting this bid or proposal, to the best of his or her knowledge and belief, that:

a. No Federal appropriated funds have been paid or will be paid, by or on behalf of the undersigned, to any person for influencing or attempting to influence an officer or employee of any Federal agency, a Member of Congress, an officer or employee of Congress, or an employee of a Member of Congress in connection with the awarding of any Federal contract, the making of any Federal grant, the making of any Federal loan, the entering into of any cooperative agreement, and the extension, continuation, renewal, amendment, or modification of any Federal contract, grant, loan, or cooperative agreement.

b. If any funds other than Federal appropriated funds have been paid or will be paid to any person for influencing or attempting to influence an officer or employee of any Federal agency, a Member of Congress, an officer or employee of Congress, or an employee of a Member of Congress in connection with this Federal contract, grant, loan, or cooperative agreement, the undersigned shall complete and submit Standard Form-LLL, "Disclosure Form to Report Lobbying," in accordance with its instructions.

2. This certification is a material representation of fact upon which reliance was placed when this transaction was made or entered into. Submission of this certification is a prerequisite for making or entering into this transaction imposed by 31 U.S.C. 1352. Any person who fails to file the required certification shall be subject to a civil penalty of not less than $10,000 and not more than $100,000 for each such failure.

3. The prospective participant also agrees by submitting its bid or proposal that the participant shall require that the language of this certification be included in all lower tier subcontracts, which exceed $100,000 and that all such recipients shall certify and disclose accordingly.

ATTACHMENT A - EMPLOYMENT AND MATERIALS PREFERENCE FOR APPALACHIAN DEVELOPMENT HIGHWAY SYSTEM OR APPALACHIAN LOCAL ACCESS ROAD CONTRACTS

This provision is applicable to all Federal-aid projects funded under the Appalachian Regional Development Act of 1965.

1. During the performance of this contract, the contractor undertaking to do work which is, or reasonably may be, done as on-site work, shall give preference to qualified persons who regularly reside in the labor area as designated by the DOL wherein the contract work is situated, or the subregion, or the Appalachian counties of the State wherein the contract work is situated, except:

a. To the extent that qualified persons regularly residing in the area are not available.

b. For the reasonable needs of the contractor to employ supervisory or specially experienced personnel necessary to assure an efficient execution of the contract work.

c. For the obligation of the contractor to offer employment to present or former employees as the result of a lawful collective bargaining contract, provided that the number of nonresident persons employed under this subparagraph (1c) shall not exceed 20 percent of the total number of employees employed by the contractor on the contract work, except as provided in subparagraph (4) below.

2. The contractor shall place a job order with the State Employment Service indicating (a) the classifications of the laborers, mechanics and other employees required to perform the contract work, (b) the number of employees required in each classification, (c) the date on which the participant estimates such employees will be required, and (d) any other pertinent information required by the State Employment Service to complete the job order form. The job order may be placed with the State Employment Service in writing or by telephone. If during the course of the contract work, the information submitted by the contractor in the original job order is substantially modified, the participant shall promptly notify the State Employment Service.

3. The contractor shall give full consideration to all qualified job applicants referred to him by the State Employment Service. The contractor is not required to grant employment to any job applicants who, in his opinion, are not qualified to perform the classification of work required.

4. If, within one week following the placing of a job order by the contractor with the State Employment Service, the State Employment Service is unable to refer any qualified job applicants to the contractor, or less than the number requested, the State Employment Service will forward a certificate to the contractor indicating the unavailability of applicants. Such certificate shall be made a part of the contractor's permanent project records. Upon receipt of this certificate, the contractor may employ persons who do not normally reside in the labor area to fill positions covered by the certificate, notwithstanding the provisions of subparagraph (1c) above.

5. The provisions of 23 CFR 633.207(e) allow the contracting agency to provide a contractual preference for the use of mineral resource materials native to the Appalachian region.

6. The contractor shall include the provisions of Sections 1 through 4 of this Attachment A in every subcontract for work which is, or reasonably may be, done as on-site work.

End of FHWA 1273

DEPARTMENT OF THE ARMY PERMIT

Permittee Maine Dept. of Transportation

Permit No. NAE-2011-01991

Issuing Office New England District

NOTE: The term "you" and its derivatives, as used in this permit, means the permittee or any future transferee. The term "this office" refers to the appropriate district or division office of the Corps of Engineers having jurisdiction over the permitted activity or the appropriate official of that office acting under the authority of the commanding officer.

You are authorized to perform work in accordance with the terms and conditions specified below.

Project Description:

Place permanent and temporary fill below the high tide line and in adjacent tidal and freshwater wetlands in order to facilitate the replacement of the existing deteriorated Route 197 bridge. Approximately 43,701 s.f. of intertidal and subtidal river bottom and adjacent tidal and freshwater wetland will be impacted by the project (net following removal of existing bridge support structures).

This work is shown on the attached plans entitled, "ROUTE 197 RICHMOND-DRESDEN, SAGADAHOC-LINCOLN CTYS", on ten sheets, and undated.

Project Location:

Kennebec River at Richmond and Dresden, Maine

Permit Conditions:

General Conditions:

1. The time limit for completing the work authorized ends on December 31, 2017. If you find that you need more time to complete the authorized activity, submit your request for a time extension to this office for consideration at least one month before the above date is reached.

2. You must maintain the activity authorized by this permit in good condition and in conformance with the terms and conditions of this permit. You are not relieved of this requirement if you abandon the permitted activity, although you may make a good faith transfer to a third party in compliance with General Condition 4 below. Should you wish to cease to maintain the authorized activity or should you desire to abandon it without a good faith transfer, you must obtain a modification of this permit from this office, which may require restoration of the area.

3. If you discover any previously unknown historic or archeological remains while accomplishing the activity authorized by this permit, you must immediately notify this office of what you have found. We will initiate the Federal and state coordination required to determine if the remains warrant a recovery effort or if the site is eligible for listing in the National Register of Historic Places.

4. If you sell the property associated with this permit, you must obtain the signature of the new owner in the space provided and forward a copy of the permit to this office to validate the transfer of this authorization.

5. If a conditioned water quality certification has been issued for your project, you must comply with the conditions specified in the certification as special conditions to this permit. For your convenience, a copy of the certification is attached if it contains such conditions.

6. You must allow representatives from this office to inspect the authorized activity at any time deemed necessary to ensure that it is being or has been accomplished in accordance with the terms and conditions of your permit.

Special Conditions:

1. The permittee shall ensure that a copy of this permit is at the work site (and the project office) authorized by this permit whenever work is being performed, and that all personnel with operational control of the site ensure that all appropriate personnel performing work are fully aware of its terms and conditions. The entire permit shall be made a part of any and all contracts and sub-contracts for work that affects areas of Corps jurisdiction at the site of the work authorized by this permit. This shall be achieved by including the entire permit in the specifications for work. The term "entire permit" means this permit (including its drawings, plans, appendices and other attachments) and also includes permit modifications.

(Special conditions continued on Page 4)

Further Information:

1. Congressional Authorities: You have been authorized to undertake the activity described above pursuant to:

( ) Section 10 of the Rivers and Harbors Act of 1899 (33 U.S.C. 403).

X Section 404 of the Clean Water Act (33 U.S.C. 1344).

( ) Section 103 of the Marine Protection, Research and Sanctuaries Act of 1972 (33 U.S.C. 1413).

2. Limits of this authorization.

a. This permit does not obviate the need to obtain other Federal, state, or local authorizations required by law.

b. This permit does not grant any property rights or exclusive privileges.

c. This permit does not authorize any injury to the property or rights of others.

d. This permit does not authorize interference with any existing or proposed Federal project.

3. Limits of Federal Liability. In issuing this permit, the Federal Government does not assume any liability for the following:

a. Damages to the permitted project or uses thereof as a result of other permitted or unpermitted activities or from natural causes.

b. Damages to the permitted project or uses thereof as a result of current or future activities undertaken by or on behalf of the United States in the public interest.

c. Damages to persons, property, or to other permitted or unpermitted activities or structures caused by the activity authorized by this permit.

d. Design or construction deficiencies associated with the permitted work.

e. Damage claims associated with any future modification, suspension, or revocation of this permit.

4. Reliance on Applicant's Data: The determination of this office that issuance of this permit is not contrary to the public interest was made in reliance on the information you provided.

5. Reevaluation of Permit Decision. This office may reevaluate its decision on this permit at any time the circumstances warrant. Circumstances that could require a reevaluation include, but are not limited to, the following:

a. You fail to comply with the terms and conditions of this permit.

b. The information provided by you in support of your permit application proves to have been false, incomplete, or inaccurate (See 4 above).

c. Significant new information surfaces which this office did not consider in reaching the original public interest decision.

Such a reevaluation may result in a determination that it is appropriate to use the suspension, modification, and revocation procedures contained in 33 CFR 325.7 or enforcement procedures such as those contained in 33 CFR 326.4 and 326.5. The referenced enforcement procedures provide for the issuance of an administrative order requiring you to comply with the terms and conditions of your permit and for the initiation of legal action where appropriate. You will be required to pay for any corrective measures ordered by this office, and if you fail to comply with such directive, this office may in certain situations (such as those specified in 33 CFR 209.170) accomplish the corrective measures by contract or otherwise and bill you for the cost.

6. Extensions. General condition 1 establishes a time limit for the completion of the activity authorized by this permit. Unless there are circumstances requiring either a prompt completion of the authorized activity or a reevaluation of the public interest decision, the Corps will normally give favorable consideration to a request for an extension of this time limit.

Your signature below, as permittee, indicates that you accept and agree to comply with the terms and conditions of this permit.

Trudy C. Gates — 11/28/2012

(PERMITTEE) *(DATE)*

This permit becomes effective when the Federal official, designated to act for the Secretary of the Army, has signed below.

[illegible] — 11-28-2012

(DISTRICT ENGINEER) *(DATE)*

Chief, Permits & Enforcement Branch
Regulatory Division
For District Engineer

When the structures or work authorized by this permit are still in existence at the time the property is transferred, the terms and conditions of this permit will continue to be binding on the new owner(s) of the property. To validate the transfer of this permit and the associated liabilities associated with compliance with its terms and conditions, have the transferee sign and date below.

(TRANSFEREE) *(DATE)*

☆U.S. GOVERNMENT PRINTING OFFICE: 1986 — 717-425

(Special conditions continued from Page 2)

If the permit is issued after the construction specifications, but before receipt of bids or quotes, the entire permit shall be included as an addendum to the specifications. If the permit is issued after receipt of bids or quotes, the entire permit shall be included in the contract or sub-contract. Although the permittee may assign various aspects of the work to different contractors or sub-contractors, all contractors and sub-contractors shall be obligated by contract to comply with all environmental protection provisions contained within the entire permit, and no contract or sub-contract shall require or allow unauthorized work in areas of Corps jurisdiction.

2. The permittee shall complete and return the enclosed Compliance Certification Form within one month following the completion of the authorized work.

3. Adequate sedimentation and erosion control devices, such as geo-textile silt fences or other devices capable of filtering the fines involved, shall be installed and properly maintained to minimize impacts during construction. These devices must be removed upon completion of work and stabilization of disturbed areas. The sediment collected by these devices must also be removed and placed upland, in a manner that will prevent its later erosion and transport to a waterway or wetland.

4. Temporary fill that is authorized herein shall adhere to the following:

a. All temporary fill shall be stabilized to prevent its eroding into portions of waters of the U.S., including wetlands, where it is not authorized.

b. Unconfined temporary fill authorized for discharge into waters of the U.S., including wetlands, shall consist of material that minimizes impacts to water quality (e.g. sandbags, clean gravel, stone, aggregate, etc.).

c. Temporary fill authorized for discharge into wetlands should be placed on geotextile fabric or other material laid on the pre-construction wetland grade where practicable to minimize impacts.

d. Temporary fill shall be removed as soon as it is no longer needed, disposed of at an upland site, and suitably contained to prevent subsequent erosion into waters of the U.S, including wetlands.

e. Waters of the U.S., including wetlands, where temporary fill was discharged shall be restored to original contour and character upon completion of the project.

5. The permittee shall implement all terms and conditions of the attached Biological Opinion from the National Marine Fisheries Services dated "November 26, 2012" in order to minimize impacts to federally threatened Atlantic sturgeon, and federally endangered shortnose sturgeon, Atlantic salmon, and Atlantic salmon critical habitat.

Special Conditions Continued on Page 5

Special Conditions Continued from Page 4

6. In order to minimize potential impacts to Essential Fish Habitat ("EFH"), specifically for Atlantic salmon and other diadromous fish, the permittee shall implement the following measures:

a. No pile driving activities shall be conducted within the river from April 1 through July 30 of any year to protect migrating adult and juvenile Atlantic salmon and other diadromous fish. Once cofferdams are installed within the proper work window, work may occur within the structures at any time. Alternatively, if construction schedules do not allow for a seasonal restriction, a maximum pile driving limit of 4 hours per day is allowed from April 1 through July 30 of any year.

b. In-water work associated with the construction of the temporary access road shall not occur between April 1 to May 31 of any year.

c. Construction of bridge abutments and other silt-producing work in the intertidal area shall be contained within turbidity curtains or other containment measures so as to avoid elevated suspended sediment levels in the river. The containment measures shall be properly maintained and remain in place until turbidity levels are consistent with normal ambient turbidity.

d. All existing bridge pilings, the Richmond abutment, the Dresden abutment to the maximum extent practicable, and other structures in subtidal and intertidal habitats shall be removed upon completion of the project (refer also to Special Condition 12).

e. Upon completion of the project and restoration of all temporary fill areas, annual surveys of the area containing aquatic vegetation on the east side of the river shall be conducted for at least 3 seasons post-construction. The surveys shall be conducted during the growing season (June through September) in order to evaluate the re-establishment of the aquatic vegetation.

f. Should the annual surveys indicate after 3 years that at least 80% of the aquatic vegetation has not re-established, a compensatory mitigation plan for unavoidable impacts to aquatic vegetated habitats may be required for the project. Any such plan shall be fully coordinated with the Corps and NMFS.

7. Except where stated otherwise, reports, drawings, correspondence and any other submittals required by this permit shall be marked with the words "Permit No. NAE-2011-01991" and shall be addressed to "Inspection Section, CENAE-R, U.S. Army Corps of Engineers, 696 Virginia Road, Concord, MA 01742-2751." Documents which are not marked and addressed in this manner may not reach their intended destination and do not comply with the requirements of this permit.

Special Conditions Continued on Page 6

Special Conditions Continued from Page 5

8. Mitigation shall consist of payment of $212,506.00 to the Natural Resource Mitigation Fund. The completed ILF Project Data Worksheet which must be mailed with a cashier's check or bank draft, made out to "Treasurer, State of Maine", with the permit number noted on the check. The check and worksheet should be mailed to: ME DEP, Attn: ILF Program Administrator, State House Station 17, Augusta, ME 04333. No project construction may begin until the permittee provides the Corps with a copy of the check, with the permit number noted on the check. The ILF amount is only valid for a period of one year from the date on the authorization letter. After that time, the project would need to be revaluated and a new amount determined.

9. The introduction, spread, or the increased risk of invasion of non-native invasive plant or animal species on the project site, into new or disturbed areas, or areas adjacent to the project site caused by the site work is prohibited. Prior to being on the construction site, the contractor shall thoroughly inspect and remove seeds, plant material, soil, mud, insects, and other invertebrates on all equipment, including construction mats, to be used on the project site to prohibit introduction of invasive organisms. At a minimum, the following shall be inspected and cleaned on terrestrial vehicles where applicable:

- *Rubber Tired Vehicles* - Crevices in upper surface and panels, tires, rims, and fender wells, spare tire mounting area, bumpers, front and rear quarter panels, around and behind grills, bottom of radiator vent openings, brake mechanisms, transmission, stabilizer bar, shock absorbers, front and rear axles, beds, suspension units, exhaust systems, light casings, and mirrors.

- *Tracked Land Vehicles* - Crevices in upper surface and panels, top of axles and tensioners, support rollers, between rubber or gridded areas, beneath fenders, hatches, under casings, and grills.

- *Interiors of All Vehicles* - Beneath seats, beneath floor mats, upholstery, beneath foot pedals, inside folds of gear shift cover.

10. The permittee must obtain a bridge permit or exemption from the US Coast Guard before beginning construction on the Martin's Point Bridge. For information contact Commander (obr), First Coast Guard District, One South Street - Battery Bldg, New York, NY 10004-5073; phone (212) 668-7021.

11. In order to fulfill the requirements of Section 106 of the National Historic Preservation Act of 1966, the permittee shall implement the stipulations contained in the attached Memorandum of Agreement between the Federal Highway Administration, the Maine State Historic Preservation Officer, and the Maine Dept. of Transportation.

12. In order to minimize potential impact to the Kennebec River Federal Navigation Project ("FNP") located at Richmond, the permittee shall remove the three existing piers and two dolphins that are located within the federal channel. The existing structures shall be

Special Conditions Continued on Page 7

removed to a minimum depth of -21 feet (mean low low water). No later than 60 days after completion of the authorized work, the permittee shall submit an as-built, full-sized drawing of the authorized work to the Corps, verifying removal of the structures from the channel. The as-built drawing shall include:

- At least one plan view showing horizontal alignment and a profile view showing vertical alignment relative to the FNP and the waterway, c) the FNP limits, d) bar (graphic) scale, e) the dates of the survey and drawings.
- The plan view shall show: north arrow, horizontal grid, and shoreline features.
- The profile view shall show the actual elevation of the top of any remaining pier/dolphin substructure relative to MLLW and authorized depth of the FNP.
- A stamp by a professional engineer or land surveyor registered in the state the work is being performed.

13. The permittee shall submit the as-built drawings and a copy of this permit to the Corps and the National Oceanic and Atmospheric Administration (NOAA), and must provide the Corps with a copy of the cover letter to NOAA. The Corps may note the location on future survey drawings and NOAA may use the information for charting purposes.

7. Monitor sturgeon movements downstream of the bridge to determine if sturgeon are overwintering near Swan Island, and report on seasonal aggregations.

10.2 Terms and Conditions

In order to be exempt from prohibitions of section 9 of the ESA, FHWA must comply with the following terms and conditions, which implement the reasonable and prudent measures described above and which outline required reporting/monitoring requirements. These terms and conditions are non-discretionary.

1. To implement reasonable and prudent measure #1, FHWA must require MDOT to do the following:
   a. Prior to initiating construction activities, convene state and federal resources agencies to review the bridge replacement activities and review any new information for potential impacts that were not considered during consultation.
   b. If new methods of avoiding and/or minimizing incidental take are identified, the MDOT must seek review and approval from NMFS before construction activities commence with any changes in *i*) construction methods and actions; *ii*) take minimization activities; and *iii)* monitoring and contingency activities. Changes to the proposed action or this incidental take statement may trigger a requirement for reinitiation.

2. To implement reasonable and prudent measure #3, FHWA must require MDOT to prepare and implement a hydroacoustic monitoring plan. MDOT must provide NMFS a draft hydroacoustic monitoring plan (e.g., locations, personnel, and equipment) at least 30 days prior to implementation for NMFS approval. This monitoring plan will describe how MDOT will:
   a) Monitor Sound Pressure Level (SPL) during pile driving, rock drilling, and pier removal using a series of hydrophones and a digital recorder capable of operating at a minimum of 600,000 samples per second for a minimum of one second, with an adjustable trigger level, and a range of at least 30 psi.
   b) Ensure that the sound pressure levels at all hydrophones be maintained below 206 dB $_{PEAK}$ re 1 µPa and below 187 dB $_{CSEL}$ re 1 µPa. In-water noise levels greater than 150dB $_{RMS}$ re 1µ Pa measured at any hydrophone must not persist in excess of 12 consecutive hours on any given day, and a 12 hour recovery period (i.e., in-water noise below 150dB $_{RMS}$ re lµ Pa, or a return to ambient levels) must be provided between work days.
   c) Initially, a minimum of three hydrophones must be used, located approximately 10, 20, and 40 meters from the river- pile/pier interface. Additional hydrophones may be required to document sound levels remain below the previously established thresholds at mid-stream, and at the farthest bank.
   d) Mitigate excessive underwater noise (>206 dB $_{PEAK}$ re 1 µPa, 187 dB $_{SEL}$ re 1 µPa, or 150dB $_{RMS}$ re 1µ Pa in excess of 12 hours.) through passive measures such as changing hammer type, reducing driving duration, reducing force settings on the hammer, or through active measures such as a bubble curtain.
   e) Provide NMFS with daily acoustic monitoring reports as generated by the contractor. Electronic means of delivery e.g., email or fax is acceptable.

3. To implement reasonable and prudent measure #4, FHWA must require MDOT to develop and implement a monitoring plan to document and remove listed species entrapped during cofferdam closure. A draft plan must be provided to NMFS at least 30 days prior to installation of the first cofferdam. The monitoring plan must explain how MDOT will do the following: :
   a) During the closure of each cofferdam, i.e., the installation of the final sheetpile, a qualified observer must be present on site. The observer(s) will monitor for the presence of live, wounded, or dead fish. In the event that dead or wounded fish resulting from the construction activities are observed, MDOT must contact us immediately.
   b) Monitor and record water temperature during cofferdam construction and closure as a means of determining the likelihood of larval sturgeon in the action area. If/when water temperature exceeds 8° C during cofferdam dewatering, sample a portion of the water pumped from each cofferdam and inspect for sturgeon larvae. For each cofferdam closed when the water temperature is above 8° C, provide feedback to NMFS on any larvae passed through the pumps and any mortalities.
   c) Ensure any trapped salmon or sturgeon are collected with a net and are visually inspected for injuries in accordance with Appendix B. Live fish must be kept in the river, or held in an aerated live well. All collected fish must be inspected for a PIT tag with an appropriate PIT tag reader. Injured fish must be visually assessed, measured, photographed, released away from the site, and reported to NMFS. The reporting form included as Appendix C must be filled out and transmitted to NMFS using the procedures outlined below.
   d) Ensure cofferdams are dewatered using large bore pumps capable of passing small fish (>10 centimeters/ 4 inch clearance between moving parts) to adequately protect all life stages of listed species that may occur in the action area. Dewatering must not begin until the cofferdam is cleared by the observer.
   e) Ensure that fin clips are taken (according to the procedure outlined in Appendix D) of any sturgeon captured during the bridge replacement and that the fin clips are sent to NMFS for genetic analysis. Fin clips of mortalities must be taken prior to preservation of other fish parts or whole bodies.

4. To implement reasonable and prudent measure #5, FHWA must require MDOT to do the following:
   a. Contact NMFS (Max Tritt: by email (max.tritt@noaa.gov) or phone (207) 866-7356 or the Section 7 Coordinator by phone (978) 281-9208 or fax 978-281-9394) within 24 hours of any interactions with Atlantic sturgeon, shortnose sturgeon, or Atlantic salmon including non-lethal and lethal takes.
   b. In the event of any lethal takes, any dead specimens or body parts must be photographed, measured, and preserved (refrigerate or freeze) until disposal procedures are discussed with NMFS.

5. To implement reasonable and prudent measure #6, FHWA must require MDOT to do the following:

a. Submit annual reports at the end of each calendar year summarizing the results of the proposed action and any takes of listed species to NMFS by mail (to the attention of the Section 7 Coordinator, NMFS Protected Resources Division, Gloucester, MA. 01930).

The reasonable and prudent measures, with their implementing terms and conditions, are designed to minimize and monitor the impact of incidental take that might otherwise result from the proposed action. If, during the course of the action, the level of incidental take is exceeded, re-initiation of consultation and review of the reasonable and prudent measures are required. FHWA and MDOT must immediately provide an explanation of the causes of the taking and review with NMFS the need for possible modification of the reasonable and prudent measures.

Specifically, these RPMs and Terms and Conditions will keep NMFS informed of when and where construction activities are taking place, and will require MDOT to report any take in a reasonable amount of time. The FHWA and MDOT have reviewed the RPMs and Terms and Conditions outlined above and all parties have agreed to implement all of these measures as described herein. The discussion below explains why each of these RPMs and Terms and Conditions are necessary and appropriate to minimize or monitor the level of incidental take associated with the proposed action and how they represent only a minor change to the action as proposed by the FHWA.

RPM #1, #2, and #3 as well as Terms and Conditions (#1-3) are necessary and appropriate as they will require that the MDOT and their contractors use best management practices and best available technology for the bridge replacement . This will ensure that take of listed Atlantic salmon, Atlantic sturgeon, and shortnose sturgeon is minimized to the extent practical. These procedures represent only a minor change to the proposed action as following these procedures should not increase the cost of the project or result in any delays or reduction of efficiency of the project.

RPM #4, #5, and #6 as well as Terms and Conditions (#4, #5, and #6) are necessary and appropriate to ensure the proper protocol and documentation of any interactions with listed species as well as requiring that these interactions are reported to NMFS in a timely manner with all of the necessary information. This is essential for monitoring the level of incidental take associated with the proposed action. These RPMs and the Terms and Conditions represent only a minor change as compliance will not result in any increased cost, delay of the project or decrease in the efficiency of the project.

RPM #7 and corresponding Terms and Condition #7 are necessary and appropriate as they will require that MDOT monitor previous sturgeon overwintering sites in the fall, winter, and in the spring to determine if they are in fact being utilized, to what degree they are being used, and to gauge the effects of the actions on the overwintering population, if any. The reporting procedures are required as a means for NMFS to remain abreast of seasonal population trends in the action area and to ensure that MDOT is aware of the effects of their actions. These RPMs and the Terms and Conditions represent only a minor change as compliance will not result in any significant increase in cost, delay of the project or decrease in the efficiency of the project.

11.0 CONSERVATION RECOMMENDATIONS

In addition to Section 7(a)(2), which requires agencies to ensure that all projects will not jeopardize the continued existence of listed species, Section 7(a)(1) of the ESA places a responsibility on all federal agencies to "utilize their authorities in furtherance of the purposes of this Act by carrying out programs for the conservation of endangered species." Conservation Recommendations are discretionary agency activities to minimize or avoid adverse effects of a proposed action on listed species or critical habitat, to help implement recovery plans, or to develop information. As such, NMFS recommends that the FHWA consider the following Conservation Recommendations:

1. The FHWA should use its authorities to stage the project such that cofferdams are not closed during the time of year when shortnose or Atlantic sturgeon larvae are migrating through the action area.

12.0 RE-INITIATION NOTICE

This concludes formal consultation concerning FHWA's bridge replacement project over the Kennebec River connecting Maine's Kennebec and Lincoln Counties. As provided in 50 CFR §402.16, re-initiation of formal consultation is required where discretionary federal agency involvement or control over the action has been retained (or is authorized by law) and if: (1) the amount or extent of taking specified in the incidental take statement is exceeded; (2) new information reveals effects of the action that may not have been previously considered; (3) the identified action is subsequently modified in a manner that causes an effect to listed species; or (4) a new species is listed or critical habitat designated that may be affected by the identified action. In instances where the amount or extent of incidental take is exceeded, Section 7 consultation must be reinitiated immediately.

This opinion assumes that the bridge will be replaced within two years. If construction and or demolition is required for a period greater than two years, FHWA must re-initiate consultation with NMFS.

IN-LIEU-FEE (ILF) PROJECT DATA WORKSHEET

DEP Invoice # _____

[Note: Will be filled in by ILF Administrator at DEP]

Project name: Route 197 Bridge Replacement

Applicant (s): Maine Dept. of Transporation

DEP Permit #: L-25359-26-A-N

Corps Permit #: NAE-2011-01991

ILF Contribution Amount $212,506.00

[Note: Please attach a copy of the check]

Project address: Route 197, Richmond and Dresden, Maine

Biophysical region: Central Interior and Mid-Coast Subsection

Size of total impact subject to compensation: 43,701 s.f.

Resources Impacted: Refer to attached table

DEP Project manager: Callahan

Corps Project manager: Clement

Corps ILF Processing Procedure:

Within 3 days of final permit approval the Corps project manager MUST send via e-mail to the ILF Administrator at DEP with the following attachments:

1. A Microsoft word version of this completed ILF project worksheet including the resource impact table. Please make sure that you double check the information to make sure that the worksheet is accurate and reflects the actual impacts that are stated in the permit and the correct biophysical region.

   [Note: The DEP Invoice # section of the worksheet should be left blank and will be filled in by the ILF Program Administrator.]

2. A copy of a location map for the project site. The map MUST be made in GIS and saved as a pdf and MUST include a call out box to physically locate the project site and enough reference information so that project site can be geo-located on the MNRCP GIS data layer.

3. A pdf copy of the Corps permit for the project.

Corps permitees MUST be instructed to send all required ILF payments to the attention of the ILF Administrator Maine Department of Environmental Protection, State House Station 17, Augusta, Maine 04333. All checks must have the ILF program routing # 014.06A.1776.14 on the memo line.

Resource(s) Impacted:

Resource Type: (Wetlands by NWI Type (PFO, PSS, M1, M2, E1, E2, etc), significant vernal pool (SVP), shorebird feeding & staging habitat (Shorebird), inland waterfowl & wading bird habitat (IWWH), tidal waterfowl & wading habitat (TWWH), and river, stream, or brook (RSB).

Wetland Functions & Values: Groundwater recharge/discharge (GWR); floodflow alterations(FF); fish & shellfish habitat (FSH); sediment toxicant retention (STR); nutrient removal (NR); production export (PE); sediment/shoreline stabilization (SS); wildlife habitat (WH); recreation (R); education/scientific value (ESV); uniqueness/heritage (UH); and visual quality/aesthetics (VQ).

Types of impacts: may include filling, dredging, vegetation conversion (e.g. forested to shrub/scrub), others.

Resource type (list all that apply)	**Functions (for wetland impacts)** (list all that apply, by resource type)	**Type of Impact** (by resource type)	**Sq Feet Impacted** (by resource type)
PSS	SS, PE, GWD, STR, NR, WH	Filling	16,199
PFO	SS, PE, GWD, STR, NR, WH	Filling	16,848[1]
	[1]This figure includes 927 s.f. of indirect impact from clearing		
R1EM2N0	SS, PE, STR, NR, WH, FF	Filling & Clearing	3,163[2]
RUS	SS, PE, STR, NR, WH	Filling	7,491[2]
	[2]These figures represent the net impact following removal of existing bridge piers & other structures		
		Total square feet impacted	43,701 s.f.

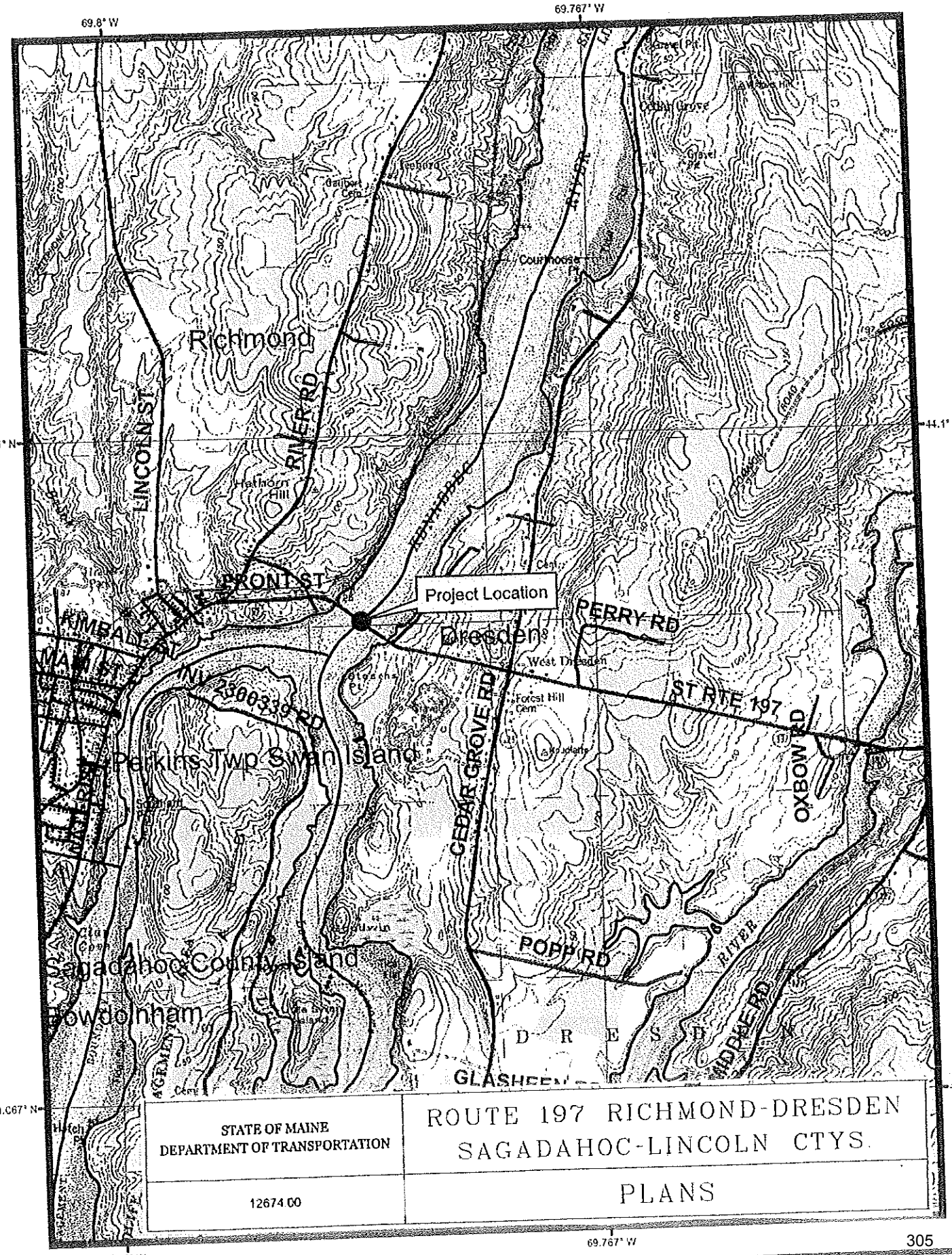

0 5501,100 2,200 3,300 4,400

Richmond-Dresden

Route 197 - Bridge Replacement

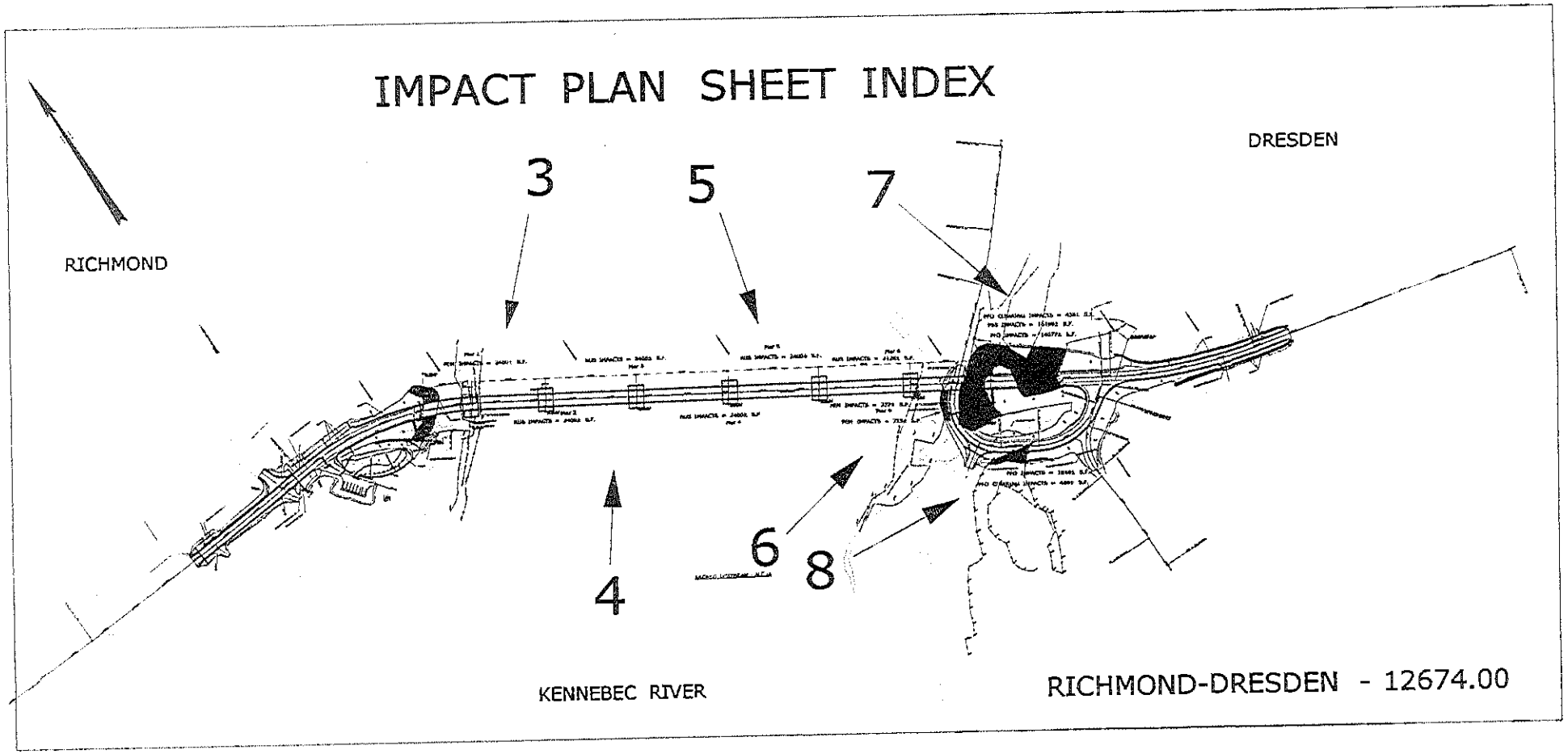

STATE OF MAINE DEPARTMENT OF TRANSPORTATION	ROUTE 197 RICHMOND-DRESDEN SAGADAHOC-LINCOLN CTYS.
12674.00	PLANS

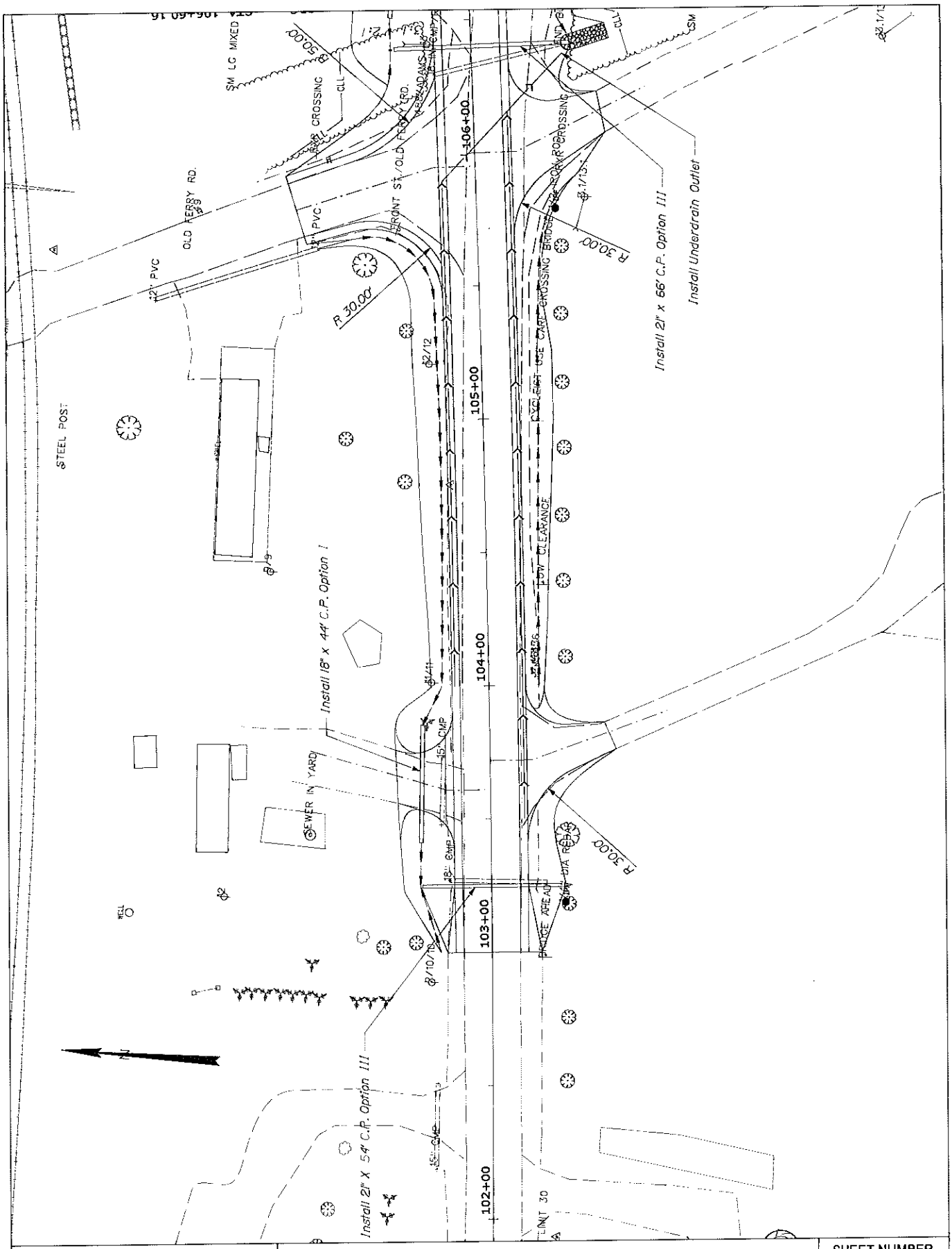

STATE OF MAINE DEPARTMENT OF TRANSPORTATION	ROUTE 197 RICHMOND-DRESDEN SAGADAHOC-LINCOLN CTYS.	SHEET NUMBER 1 307
12674.00	PLANS	OF9

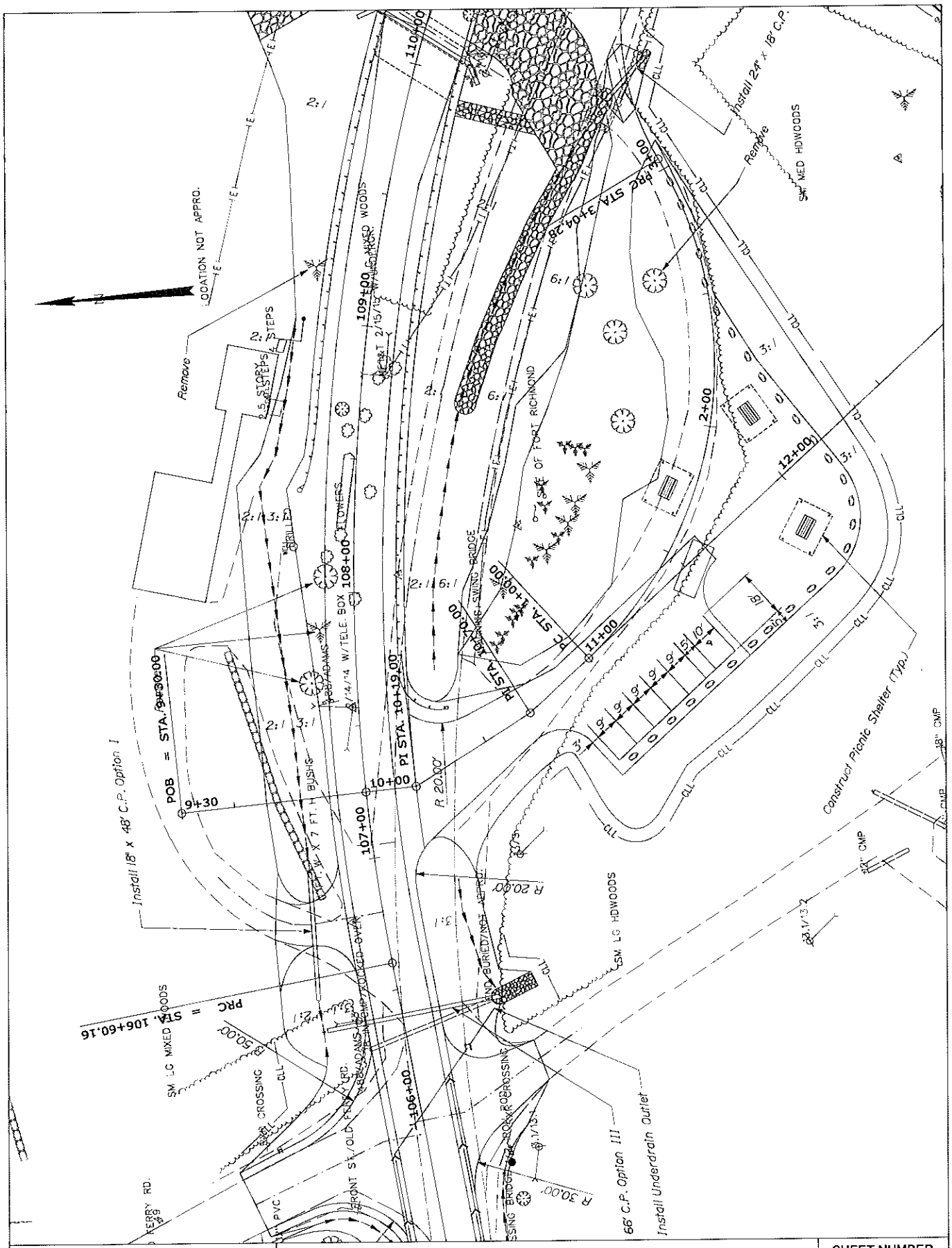

STATE OF MAINE DEPARTMENT OF TRANSPORTATION	ROUTE 197 RICHMOND-DRESDEN SAGADAHOC-LINCOLN CTYS.	SHEET NUMBER 2 308
12674.00	PLANS	OF9

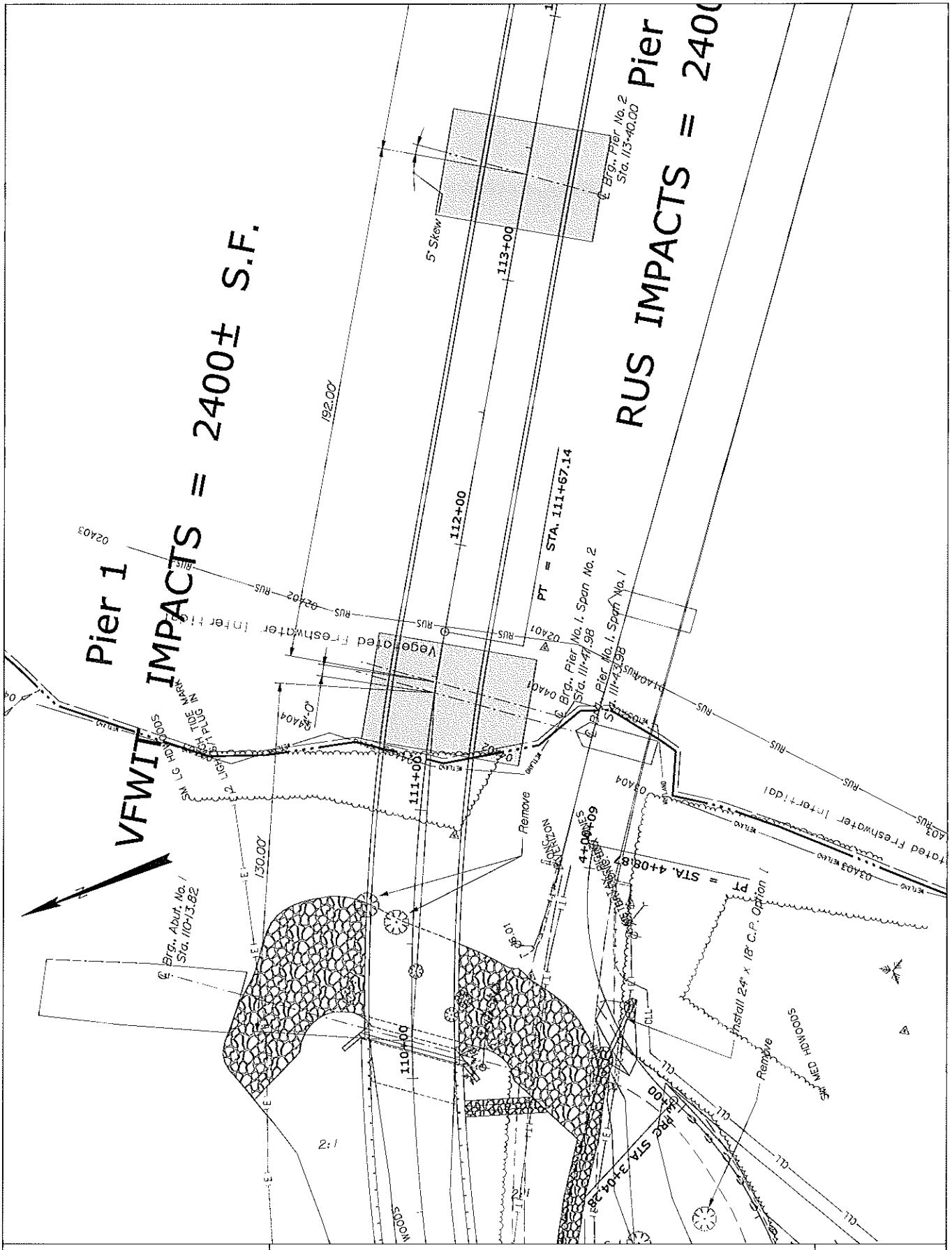

STATE OF MAINE DEPARTMENT OF TRANSPORTATION	ROUTE 197 RICHMOND-DRESDEN SAGADAHOC-LINCOLN CTYS.	SHEET NUMBER 3 309
12674.00	PLANS	OF9

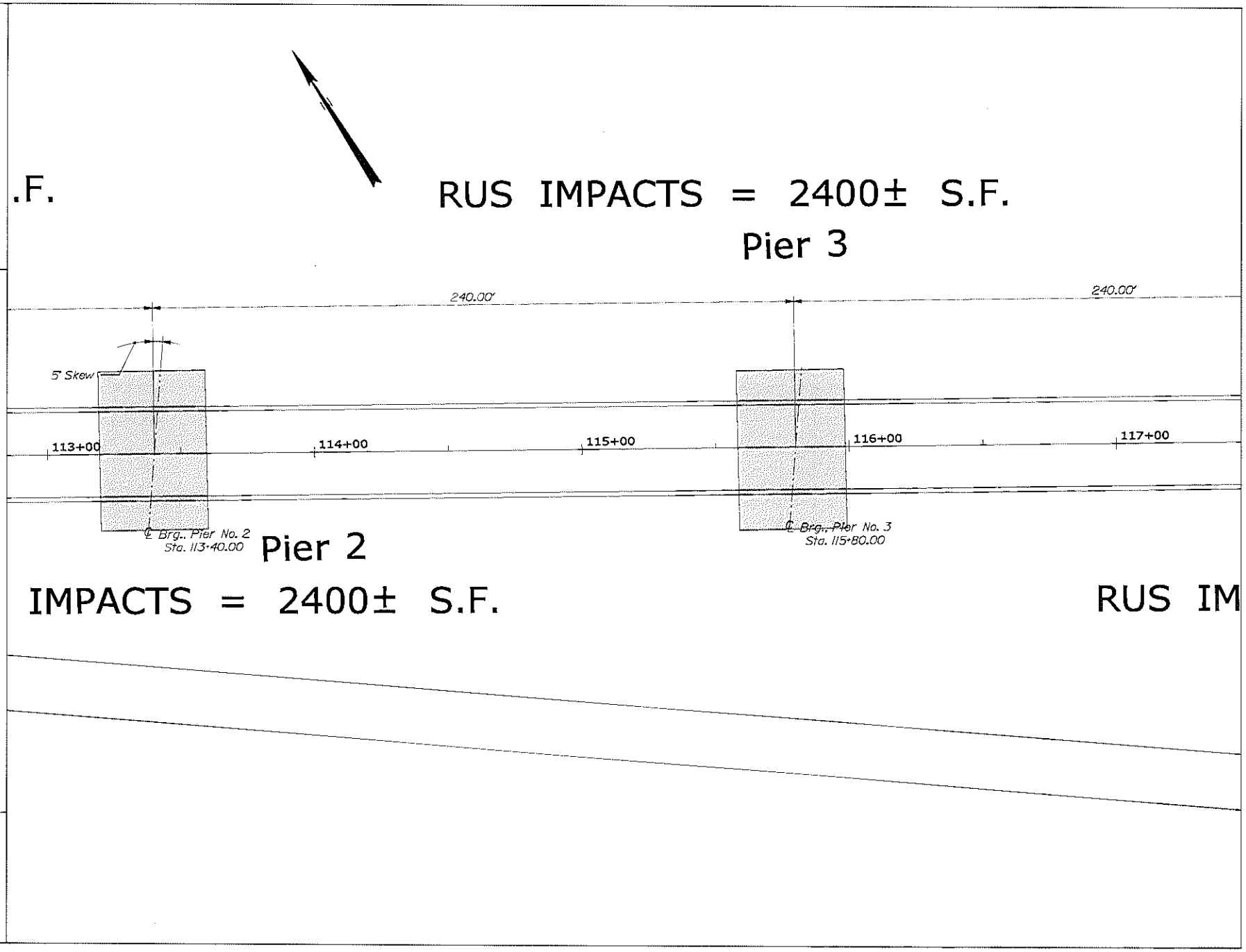

STATE OF MAINE
DEPARTMENT OF TRANSPORTATION

ROUTE 197 RICHMOND-DRESDEN
SAGADAHOC-LINCOLN CTYS.

PLANS

12674.00

SHEET NUMBER
4
OF9

310

STATE OF MAINE
DEPARTMENT OF TRANSPORTATION

12674.00

ROUTE 197 RICHMOND-DRESDEN
SAGADAHOC-LINCOLN CTYS.

PLANS

SHEET NUMBER
5
311
OF9

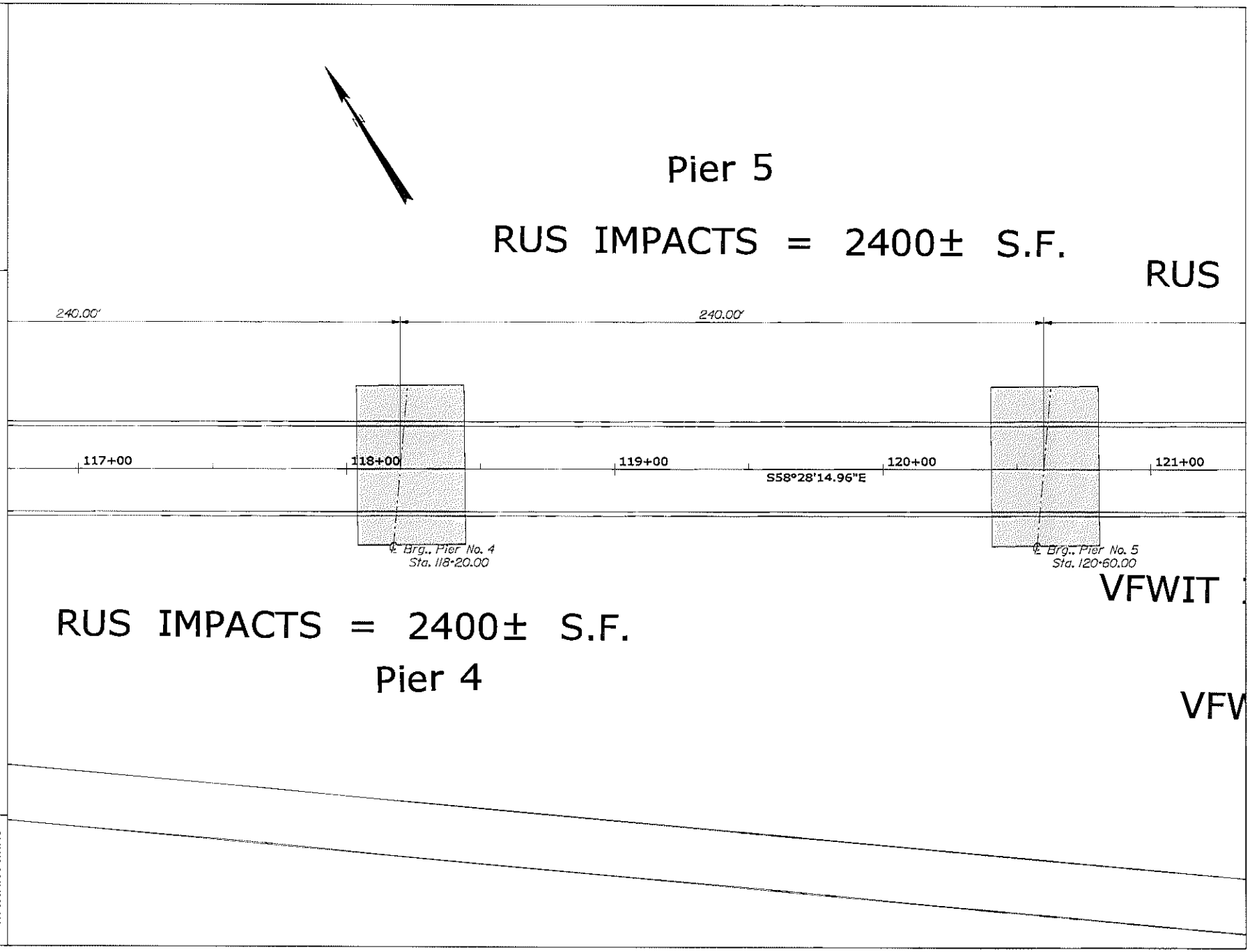

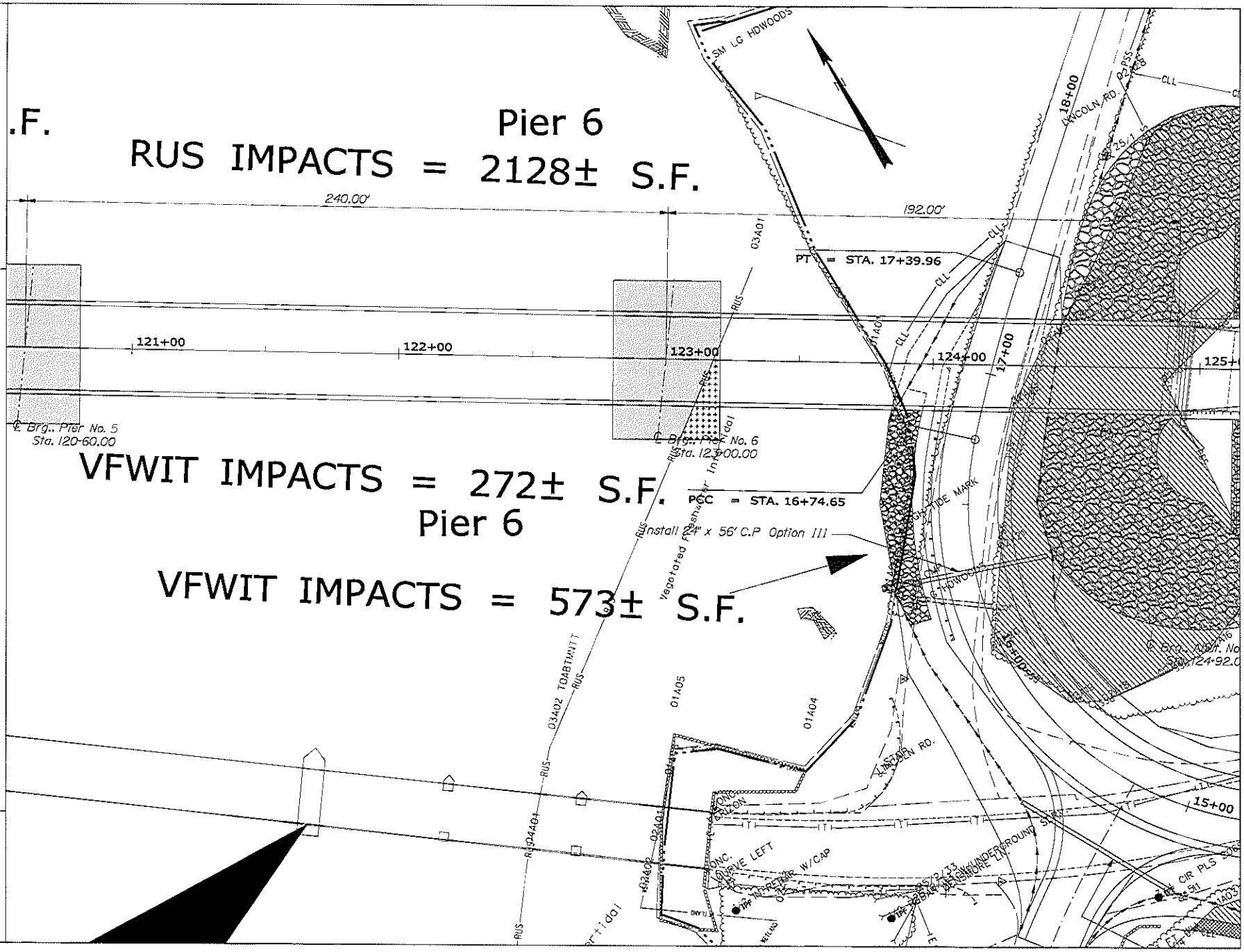

STATE OF MAINE
DEPARTMENT OF TRANSPORTATION

ROUTE 197 RICHMOND-DRESDEN
SAGADAHOC-LINCOLN CTYS.

PLANS

12674.00

SHEET NUMBER
6
312
OF9

PFO CLEARING IMPACTS = 438± S.F.

PSS IMPACTS = 16199± S.F.

PFO IMPACTS = 14077± S.F.

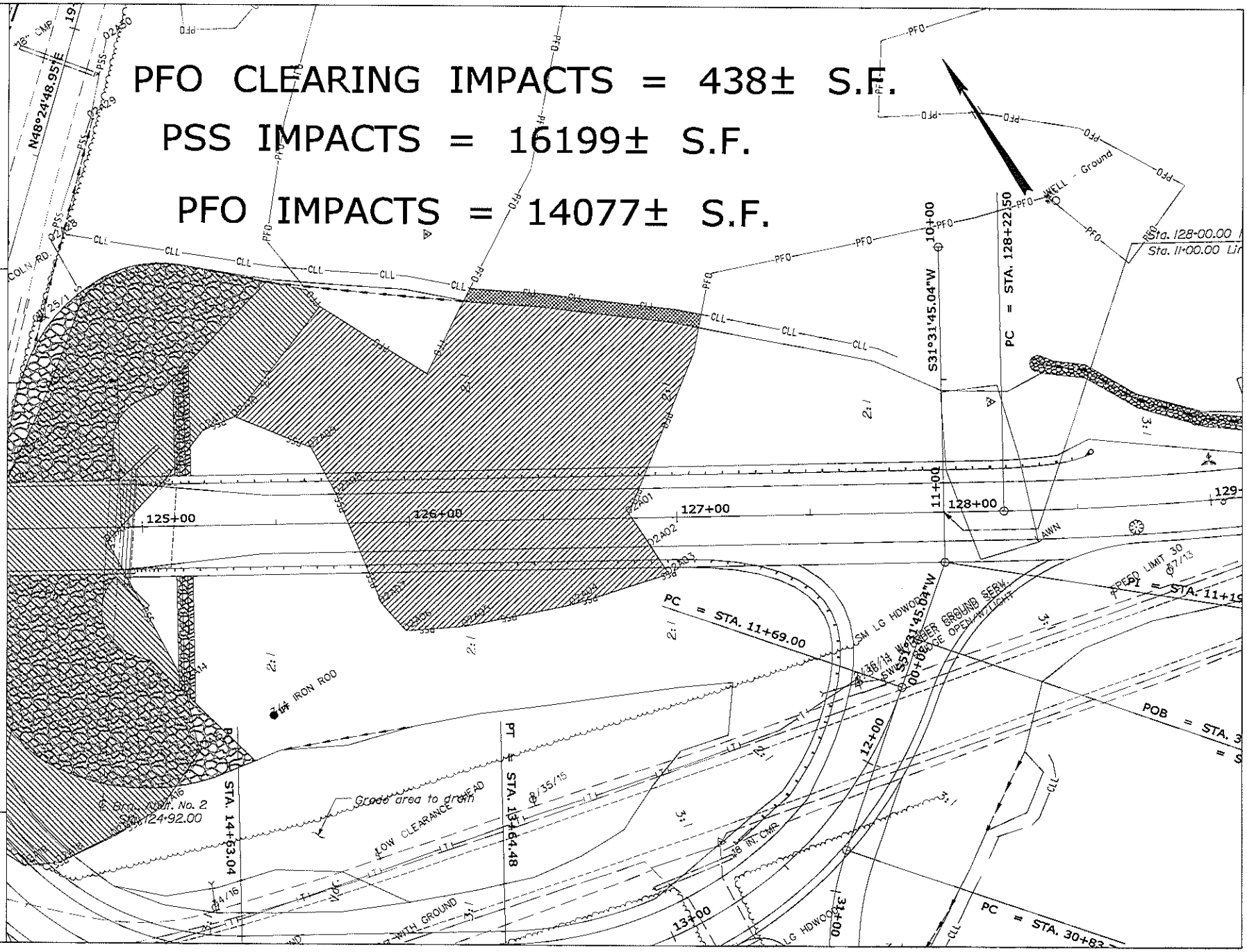

STATE OF MAINE
DEPARTMENT OF TRANSPORTATION

ROUTE 197 RICHMOND-DRESDEN
SAGADAHOC-LINCOLN CTYS.

PLANS

12674.00

SHEET NUMBER 313

OF9

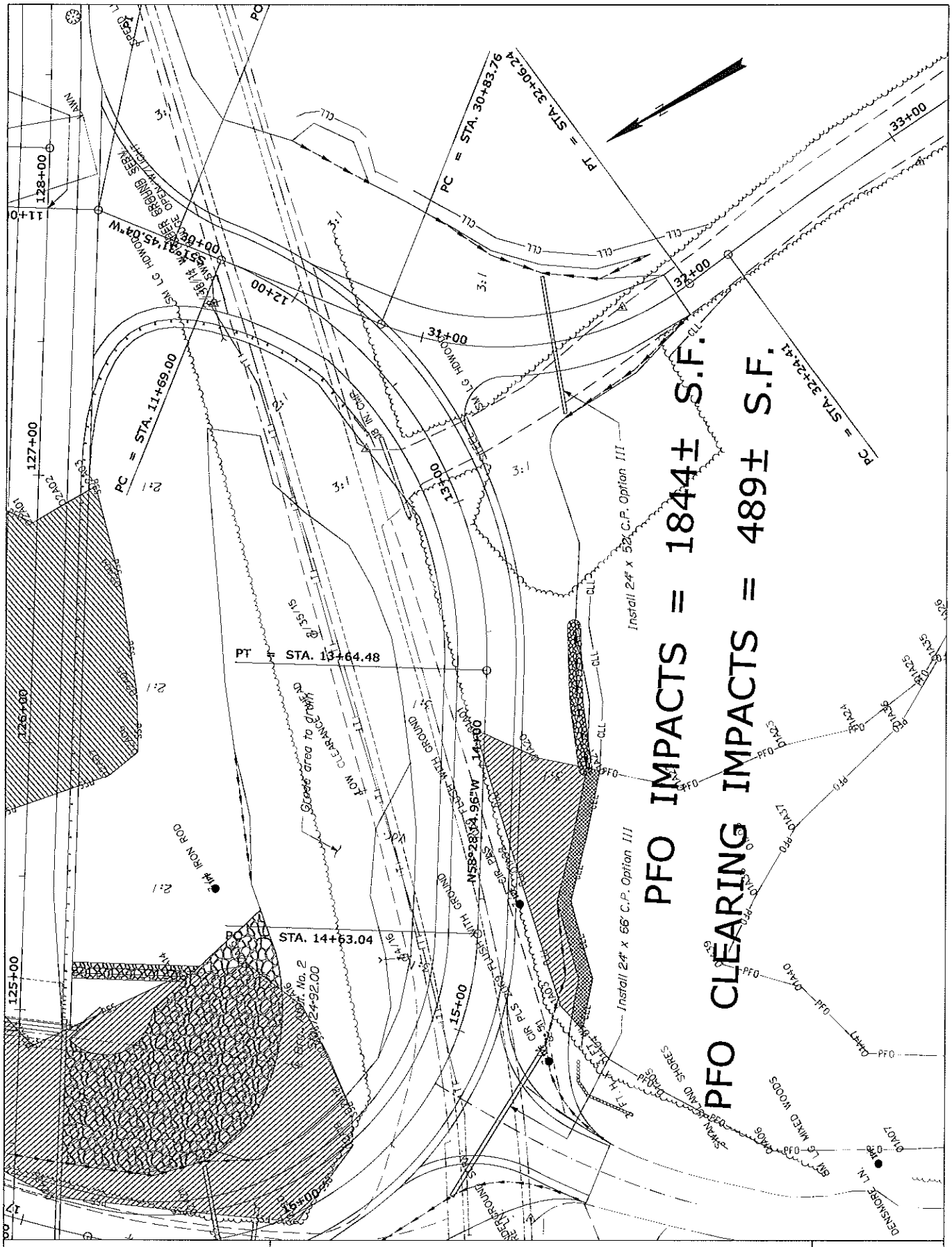

STATE OF MAINE DEPARTMENT OF TRANSPORTATION	ROUTE 197 RICHMOND-DRESDEN SAGADAHOC-LINCOLN CTYS.	SHEET NUMBER 8 314
12674.00	PLANS	OF9

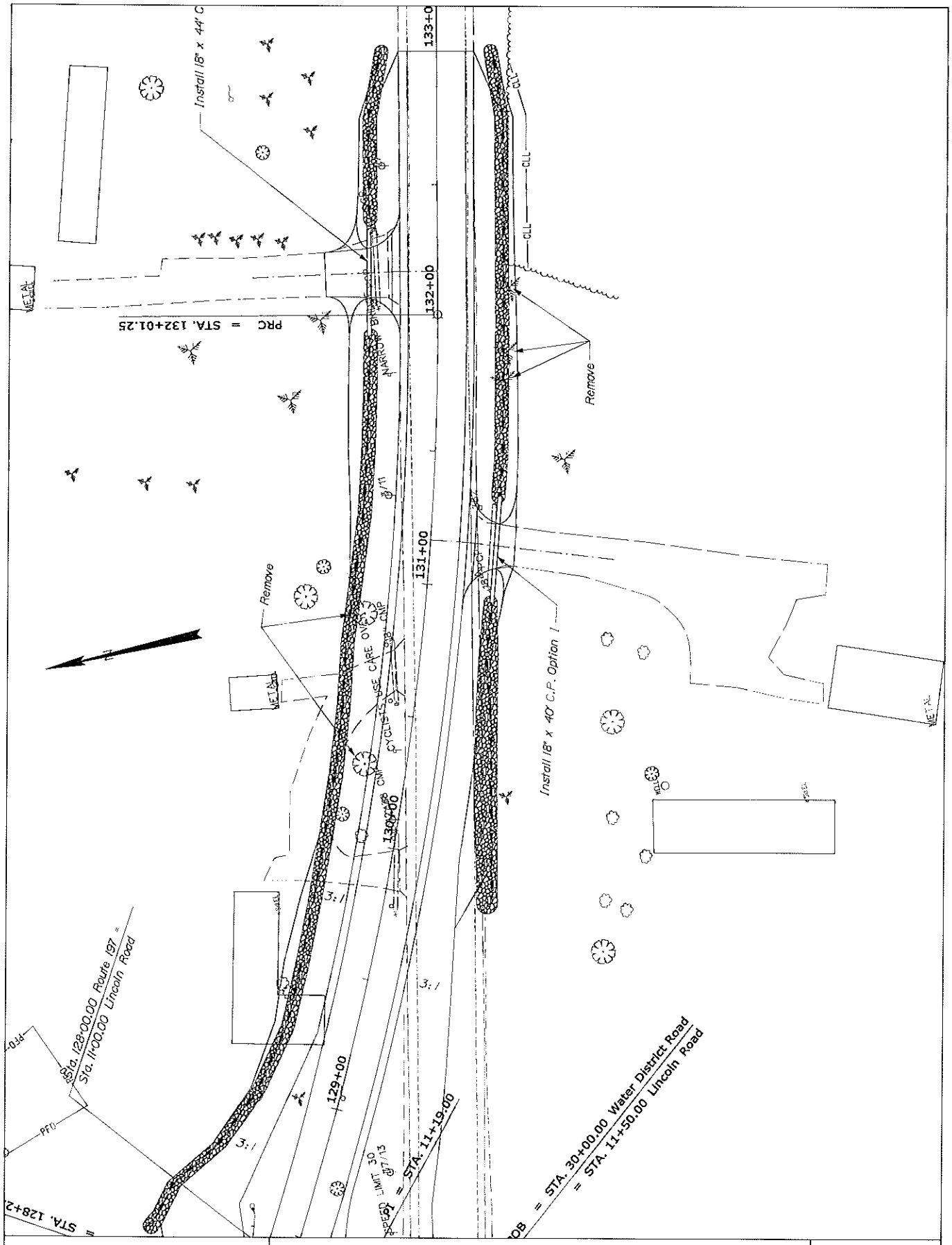

STATE OF MAINE DEPARTMENT OF TRANSPORTATION	ROUTE 197 RICHMOND-DRESDEN SAGADAHOC-LINCOLN CTYS.	SHEET NUMBER 9 315
12674.00	PLANS	OF9

US Army Corps of Engineers®
New England District

INDIVIDUAL PERMIT WORK-START NOTIFICATION FORM

(Minimum Notice: Two weeks before work begins)

****

* MAIL TO: U.S. Army Corps of Engineers, New England District *
* Permits and Enforcement Branch *
* Regulatory Division *
* 696 Virginia Road *
* Concord, Massachusetts 01742-2751 *

****

Corps of Engineers Permit No. NAE-2011-01991 was issued to the Maine Dept. of Transportation on 11/28/12 . This work is located in the Kennebec River at Richmond and Dresden, Maine. The permit authorized the permittee to place permanent and temporary fill below the high tide line and in adjacent tidal and freshwater wetlands in order to facilitate the replacement of the existing deteriorated Route 197 bridge. Maine DOT WIN 12674.00

The people (e,g., contractor) listed below will do the work, and they understand the permit's conditions and limitations.

PLEASE PRINT OR TYPE

Name of Person/Firm: _____

Business Address: _____

_____

_____

_____

Telephone Numbers: ( ) _____ ( ) _____

Proposed Work Dates: **Start:** _____ **Finish:** _____

Permittee/Agent Signature: _____ **Date:** _____

Printed Name: _____ **Title:** _____

Date Permit Issued: 11/28/12 Date Permit Expires: 12/31/17

****

FOR USE BY THE CORPS OF ENGINEERS

PM: Clement **Submittals Required:** Yes

Inspection Recommendation: Inspect as convenient

_____

_____

US Army Corps
of Engineers®
New England District

(Minimum Notice: Permittee must sign and return notification within one month of the completion of work.)

COMPLIANCE CERTIFICATION FORM

USACE Project Number: NAE-2011-01991

Name of Permittee: Maine Dept. of Transportation MaineDOT WIN 12674.00

Permit Issuance Date: 11/28/12

Please sign this certification and return it to the following address upon completion of the activity and any mitigation required by the permit. You must submit this after the mitigation is complete, but not the mitigation monitoring, which requires separate submittals.

```
*********************************************************************
* MAIL TO: U.S. Army Corps of Engineers, New England District       *
*          Policy Analysis/Technical Support Branch, ATTN: Marie Farese *
*          Regulatory Division                                      *
*          696 Virginia Road                                        *
*          Concord, Massachusetts 01742-2751                        *
*********************************************************************
```

Please note that your permitted activity is subject to a compliance inspection by an U.S. Army Corps of Engineers representative. If you fail to comply with this permit you are subject to permit suspension, modification, or revocation.

I hereby certify that the work authorized by the above referenced permit was completed in accordance with the terms and conditions of the above referenced permit, and any required mitigation was completed in accordance with the permit conditions.

_____ _____

Signature of Permittee Date

_____ _____

Printed Name **Date of Work Completion**

(____) _____ (____) _____

Telephone Number Telephone Number

STATE OF MAINE
DEPARTMENT OF ENVIRONMENTAL PROTECTION

PAUL R. LEPAGE
GOVERNOR

PATRICIA W. AHO
COMMISSIONER

October 2012

Maine Department of Transportation
16 State House Station
Augusta, ME 04333
ATTN: Kristen Chamberlain

RE: Natural Resources Protection Act Application, Richmond-Dresden, #L-25721-4E-A-N/ L-25721-2G-B-N

Dear Ms. Chamberlain:

Please find enclosed a signed copy of your Department of Environmental Protection land use permit. You will note that the permit includes a description of your project, findings of fact that relate to the approval criteria the Department used in evaluating your project, and conditions that are based on those findings and the particulars of your project. Please take several moments to read your permit carefully, paying particular attention to the conditions of the approval. The Department reviews every application thoroughly and strives to formulate reasonable conditions of approval within the context of the Department's environmental laws. You will also find attached some materials that describe the Department's appeal procedures for your information.

If you have any questions about the permit or thoughts on how the Department processed this application please get in touch with me directly. I can be reached at (207) 446-1586 or at beth.callahan@maine.gov.

Sincerely,

Beth Callahan

Beth Callahan, Project Manager
Division of Land Resource Regulation
Bureau of Land and Water Quality

pc: File

AUGUSTA
17 STATE HOUSE STATION
AUGUSTA, MAINE 04333-0017
(207) 287-7688 FAX: (207) 287-7826
RAY BLDG., HOSPITAL ST

BANGOR
106 HOGAN ROAD
BANGOR, MAINE 04401
(207) 941-4570 FAX: (207) 941-4584

PORTLAND
312 CANCO ROAD
PORTLAND, MAINE 04103
(207) 822-6300 FAX: (207) 822-6303

PRESQUE ISLE
1235 CENTRAL DRIVE, SKYWAY PARK
PRESQUE ISLE, MAINE 04769-2094
(207) 764-0477 FAX: (207) 764-3143

WEB SITE: WWW.MAINE.GOV/DEP

STATE OF MAINE
DEPARTMENT OF ENVIRONMENTAL PROTECTION
17 STATE HOUSE STATION
AUGUSTA, ME 04333

DEPARTMENT ORDER
IN THE MATTER OF

MAINE DEPARTMENT OF TRANSPORATION	) NATURAL RESOURCES PROTECTION
Richmond and Dresden,	) COASTAL WETLAND ALTERATION
Sagadahoc and Lincoln Counties	) WETLANDS OF SPECIAL SIGNIFICANCE
MAINE KENNEBEC BRIDGE #2506 REPLACEMENT	) WATER QUALITY CERTIFICATION
L-25721-4E-A-N (approval)	)
L-25721-2G-B-N (approval)	) FINDINGS OF FACT AND ORDER

Pursuant to the provisions of 38 M.R.S.A. Sections 480-A et seq. and Section 401 of the Federal Water Pollution Control Act, the Department of Environmental Protection has considered the application of the MAINE DEPARTMENT OF TRANSPORTATION with the supportive data, agency review comments, and other related materials on file and FINDS THE FOLLOWING FACTS:

1. PROJECT DESCRIPTION:

A. Summary: The applicant proposes to replace an existing ten-span swing bridge, known as the Maine Kennebec Bridge #2506, with a six-span fixed bridge. The new bridge will be supported by six 40-feet wide by 60-feet long piers, will have a 75-foot vertical clearance at mean high water, and will span 1,478 feet across the Kennebec River. The bridge will be situated 45 feet upstream of the existing bridge on its Richmond side and situated 200 feet upstream of the existing bridge on its Dresden side. The applicant further proposes to construct approximately 1,500 feet of approach roadwork on each side of the bridge. Bridge approaches will consist of two 11-foot lanes with five-foot shoulders. The purpose of the proposed project is to replace an existing bridge with a new bridge that meets current safety and navigational standards. The proposed project can be seen on a set of plans, the first of which is entitled "Vicinity Plan, Maine Kennebec Bridge (River Mile 26.2)", prepared by the applicant and dated June 21, 2012. The project site is located over the Kennebec River at Route 197 in the Towns of Richmond and Dresden.

B. Current Use of the Site: The project site consists of an existing ten-span swing bridge that carries Route 197 over the Kennebec River. The existing bridge is supported by ten concrete abutments and piers and has a vertical clearance of approximately 16 feet at mean high water. The applicant stated that the existing bridge is currently in poor condition, has a limited remaining service life, and is in need of replacement.

2. EXISTING SCENIC, AESTHETIC, RECREATIONAL OR NAVIGATIONAL USES:

In accordance with Chapter 315, Assessing and Mitigating Impacts to Scenic and Aesthetic Uses, the applicant submitted a copy of the Department's Visual Evaluation Field Survey Checklist as Appendix A to the application along with a description of the property and the proposed project. The applicant also submitted several photographs of the proposed project site including an aerial photograph of the project site and a photo-simulation of the

proposed bridge set against the existing landscape. Department staff visited the project site on September 24, 2012.

The proposed project is located over the Kennebec River, which is a scenic resource visited by the general public, in part, for the use, observation, enjoyment and appreciation of its natural and cultural visual qualities. Swan Island (Steve Powell Wildlife Management Area), a scenic resource owned and managed by the Maine Department of Inland Fisheries and Wildlife (MDIFW), is located approximately 1,500 feet downstream from the existing bridge and approximately 1,700 feet from the proposed bridge. MDIFW provided no comments on potential impacts to the viewshed of Swan Island.

Existing Scenic and Aesthetic Uses. The existing bridge and the proposed bridge were evaluated using the Department's Visual Impact Assessment Matrix. The existing bridge was found to have a severe potential visual impact rating, and the proposed bridge was found to have a strong potential visual impact rating. Although the potential for impacts to the visual quality of the scenic resources is high, the applicant has taken measures in its design of the proposed bridge to lessen existing visual impacts as compared to the current swing bridge. The proposed bridge will be constructed of weathering steel, similar to the material used to construct nearby upstream bridges, specifically the Gardiner-Randolph Bridge in the Towns of Gardiner and Randolph and the Augusta Third Bridge in the City of Augusta. Weathering steel is comprised of steel alloys specifically developed to eliminate the need for painting and forms a rust-like appearance when exposed to the weather for several years. The rust-like appearance is anticipated to soften the look of the proposed bridge and aid in blending with the natural environment. The applicant has also minimized visual impacts by not proposing to install roadway lights on the bridge. However, three small U.S. Coast Guard navigational lights will be placed below the bridge, similar to the lights placed on the nearby upstream bridges. Based on the information submitted in the application, the site visit, and the visual impact rating as compared to the existing bridge, the Department finds that the location and scale of the proposed activity is compatible with the existing visual quality and landscape characteristics found within the viewshed of the scenic resource in the project area.

Existing Recreational and Navigation Uses. The waterbody at the existing bridge location is approximately 1,250 feet wide, and the depth of the waterbody ranges from 19.7 to 20.3 feet at mean low water. The existing navigational clearance at the site of the current swing bridge is 64.2 feet wide and passes on the western side of the bridge. The proposed bridge will have a 200-foot wide navigational channel, and will have an abutment to abutment length of 1,478 feet. The U.S. Army Corps of Engineers maintains a federal navigational channel in the Kennebec River that is 150 feet wide and 17 feet deep. The applicant stated that the proposed bridge's horizontal clearance exceeds the width of the navigational channel. In order to maintain the federally required depth of the channel, the applicant will remove the existing bridge substructures within and immediately adjacent to the federal channel to a depth of -22.69 mean low water. Remaining substructures outside the federal channel will be removed to one foot below streambed. The applicant further stated that navigation through the channel will remain unobstructed during construction of the proposed project. The Department does not anticipate that the proposed project will significantly alter navigational uses of the area.

Existing Historic Uses. The applicant evaluated the proposed project in accordance with Section 106 of the National Historic Preservation Act and the Maine Programmatic Agreement. The applicant identified the Maine Kennebec Bridge #2506, the Fort Richmond archaeology site, and one property at the intersection of Old Ferry Road and

River Road as properties eligible for the National Register of Historic Places within the immediate vicinity of the proposed project site. The applicant and the Maine Division of the Federal Highway Administration determined that the proposed project will result in a finding of adverse effect to the Maine Kennebec Bridge #2506 and the Fort Richmond archaeology site. The Maine Historic Preservation Commission (MHPC) concurred with the applicant's finding. The applicant, the Federal Highway Administration, and MHPC signed a Memorandum of Agreement, dated March 14, 2012, which outlines specific measures in which the applicant will mitigate for adverse historic effects. Mitigation measures include documenting the Maine Kennebec Bridge #2506 in accordance with Maine Historic Engineering Record standards and conducting a Phase III Archaeological Data Recovery on the Fort Richmond archaeological site. Based upon information contained in the application and the Memorandum of Agreement, the Department finds that the applicant has reasonably mitigated for adverse effects to National Register-eligible properties within the immediate vicinity of the proposed project site. The applicant shall submit final results of the archaeological study along with MHPC's finding to the Department for review.

The Department finds that the proposed activity will not unreasonably interfere with existing scenic, aesthetic, recreational or navigational uses of the protected natural resource provided that the applicant adheres to the historical mitigation measures outlined in the Memorandum of Agreement, and submits results of the archaeological study to the Department for review as described above.

3. SOIL EROSION:

In order to minimize sedimentation into the resource, construction will be performed using a number of erosion control and sedimentation structures and filtering techniques in accordance with the *State of Maine Department of Transportation Standard Specifications for Highways and Bridges* and the *Department of Transportation's Best Management Practices for Erosion and Sediment Control*. The applicant submitted a construction and erosion control plan for the proposed project that provides an overview of preparatory activities, demolition activities, construction activities, and a post-construction work plan, as explained in Section 17 of the application. These activities are discussed in further detail in Finding 5.

The Department finds that the activity will not cause unreasonable erosion of soil or sediment nor unreasonably inhibit the natural transfer of soil from the terrestrial to the marine or freshwater environment.

4. HABITAT CONSIDERATIONS:

Fisheries. The applicant stated that sound will be generated by a vibratory hammer during installation of coffer dam sheet piles. Based upon a number of technical reports regarding noise thresholds for fish and fisheries hydro acoustics, the applicant stated that fish could have a tendency to move away from a sound source as low as 160 decibels (dB). The applicant further states that there are no known direct physical effects to fish when sounds are generated at levels below 206 dB Peak and 187 dB, and that construction of the proposed project is expected to remain below this sound level threshold.

To mitigate for potential sound-generated effects, the applicant proposed a combination of an in-water work window that allows for 17 hours of noise-producing activity within a 10-

day period of work, and migration zones with lower work sound levels in certain areas at any given time. Noise-producing activity as a result of pile driving is anticipated to occur, on average, for 17 hours over a 10-day period (approximately 120 minutes per day). Variation in substrate and river conditions may require occasional longer periods of pile-driving; however, the applicant agrees to limit its operation of in-water noise-producing equipment, during pile driving activity to no more than 240 minutes on any one day. No work will occur on Sundays. Zones of lower noise levels will be made available during pile driving activities on each side of the river approximately 150 meters away from any given coffer dam. Further, the applicant will implement a noise monitoring program for pile driving activities to ensure that noise levels are below injury limits for potential endangered fish species within the project area.

The Department of Marine Resources (DMR) reviewed the proposed project and stated that the segment of waterbody on which the proposed project is located, is utilized as a migratory pathway, feeding and forage area, and nursery area for ten species of fish that area regulated by DMR. These species consist of alewife, American eel, American shad, Atlantic salmon, Atlantic sturgeon, blueback herring, rainbow smelt, sea lamprey, shortnose sturgeon, and striped bass. Atlantic salmon and shortnose sturgeon are federally listed as endangered species; Atlantic sturgeon is listed as a federally threatened species. DMR expressed concern that sounds generated by pile driving equipment and removal of the existing bridge piles may result in potential adverse impacts to one or more outlined fish species. However, DMR acknowledged that the applicant's proposed noise mitigation measures may help to reduce potential impact to fish species. DMR recommended that its agency be contacted if a fish mortality is observed during the construction process.

The applicant acknowledged DMR's comments and agreed to report any fish mortality that is directly correlated to or caused by the proposed project's construction activities.

Based upon consideration of DMR's comments and the applicant's mitigation plan for sound generation, weighing the potential noise impacts of the construction of a proposed bridge at the site with the practicability and need of the proposed project, and considering the fact that the project purpose is to address a public safety concern, which is a factor that the Department considers when determining whether a single activity is reasonable in relation to the direct and cumulative impacts on the resource, the Department finds that the proposed project will not have an unreasonable effect on freshwater, estuarine or marine fisheries or other aquatic life within the Kennebec River provided that that applicant implements its noise mitigation measures which limits use of in-water, noise-generating equipment (vibratory hammer) to 17 hours of noise-producing activity within a 10 day period of work; creates fish migration zones of lower noise levels; hydro-acoustically monitors sound levels generated by in-water construction activities; and provided that the applicant reports any fish mortality that is directly correlated to or caused by the proposed project's construction activities to DMR.

Natural Areas. The Maine Natural Areas Program (MNAP) of the Department of Agriculture, Conservation, and Forestry reviewed the proposed project and stated that there are populations of six rare plant species on the Dresden side of the new bridge that will be disturbed during construction. MNAP recommended that in order to minimize impact to the rare plant habitat, temporary access roads should be constructed on the downstream side of the proposed bridge. Further, a geotextile fabric barrier should be placed over the marsh substrate prior to temporary road construction in order to allow the marsh substrate to be reclaimed once the temporary access is removed. The applicant

acknowledged, agreed to, and revised its temporary access construction plan accordingly to incorporate MNAP's recommendations.

Wildlife. According to the Department's Geographic Information System (GIS) mapping database, a mapped Tidal Waterfowl and Wading Bird Habitat is located adjacent to the proposed project site on the downstream side of the existing bridge. No work is proposed to occur within this habitat.

The Department finds that the activity will not unreasonably harm any significant wildlife habitat, freshwater wetland plant habitat, threatened or endangered plant habitat, aquatic or adjacent upland habitat, travel corridor, freshwater, estuarine or marine fisheries or other aquatic life provided that the applicant implements its noise mitigation measures which limits use of in-water, noise-generating equipment; creates reduced noise level zones; monitors in-water construction sound levels; and provided that the applicant reports any fish mortality that is directly correlated to or caused by the proposed project's construction activities to DMR as described above .

5. WATER QUALITY CONSIDERATIONS:

Construction of the proposed project is likely to take up to two years to complete. The applicant's construction and erosion control plan provides an overview of all in-water work, which includes prepartory activities, demolition activities, construction activities, and post-construction restoration activities, and is described as follows:

Pre-Construction Activities. Pre-construction activities consist of creating a staging area and access area on an upland area adjacent to the proposed project site. Further, a temporary access road, measuring approximately 30-feet wide by 200- feet long, will be constructed on each side of the waterbody, perpendicular to the shoreline. The two temporary access roads will be used to access and construct the support piers (first piers) closest to the shoreline. Temporary access roads will be constructed of clean fill and removed after use, immediately followed by restoration of the area. The temporary access roads will be constructed at low tide on the downstream side of the proposed project site and will incorporate a geotextile barrier over the vegetated freshwater intertidal area in accordance with the MNAP's recommendations. MNAP recommendations are described in further detail in Finding 4.

Demolition. As part of the proposed project, the existing bridge and its piers will be removed. The applicant stated that demolition will occur from August 1 through April 1 of any given calendar year. The deck of the bridge will be removed by barge or by land using a crane to load deck parts onto a parked vehicle. The piers of the bridge will be broken into pieces by a hoe ram and removed from the waterbody with a clam shell bucket. Blasting may be necessary to assist in the removal of the bridge piers. If the applicant determines that blasting is necessary, a blasting plan, including expected pressure levels and proposed timing, will be submitted to the National Marine Fisheries Service of the National Oceanic and Atmospheric Administration for review and approval.

Construction and Dewatering Activity. The applicant proposes to install coffer dams with a dewatering system around new support pier locations in order to conduct all in-water work in the dry. Each of the piers and their foundations will be constructed inside of a coffer dam. Each coffer dam will be comprised of 60 U-shaped pairs of sealed sheet piles. Construction of each coffer dam is estimated to take two weeks. A qualified observer will monitor the closing of the coffer dams to ensure that no fish become trapped within the coffer dams. Dewatering activities will occur once the coffer dams have been sealed and sediment has

settled to bottom of the coffer dam. Water from inside the coffer dams will be pumped into a sediment basin for filtration. The sediment basin will be comprised of hay bales or dirt bags, and will be located on an upland area with adequate vegetation between the basin and waterbody for filtration.

Subsequent to dewatering, the new bridge piers will be constructed. Piers 1 and 6 will be accessed by the temporary access road, and Piers 3, 4, and 5 will be accessed by barge. Piers 1, 2, 3, and 5 will be placed onto bedrock. Piers 4 and 6 will be supported by piles that are driven to bedrock.

Dredging Activity. Excavation for pier construction will be completed within and at the bottom of cofferdams. Approximately 8,000 cubic yards of uncontaminated glaciomarine silts and clay will be excavated from two pier locations totaling 15,000 square feet in area. Dredged material will be dewatered using the system described above and re-used at nearby upland areas in accordance with the Department's Chapter 418 Solid Waste Rules for Beneficial Use of Solid Wastes. The Department's Bureau of Remediation and Waste Management, Division of Solid Waste Management (DSWM) reviewed the proposed project and approved of the applicant's assessment of substrate material and approach to dredge and dewater material from the pier locations.

Post-Construction Restoration Activities. Following construction, the temporary access roads and all coffer dams will be removed allowing water to be restored to the area. All existing bridge piers will be removed to at least one foot below streambed elevation. The existing piers that are in or adjacent to the federal navigation channel will be removed to a depth of -22.69 mean low water. Any depression left after pier removal is expected to naturally fill in with the substrate material that is adjacent to the removed pier structures. At this time, the applicant does not propose to remove the abutments of the existing bridge.

Based upon the applicant's detailed work plan, the Department does not anticipate that the proposed project will violate any state water quality law, including those governing the classification of the State's waters.

6. WETLANDS AND WATERBODIES PROTECTION RULES:

In order to construct the project, the applicant proposes to impact the following protected natural resources. Direct impacts are associated with construction of the proposed bridge and approach work; indirect impacts are associated with riparian clearing activities and construction of the temporary access roads.

- Freshwater Wetland (direct impact)
  - Forested: 16,199 square feet
  - Scrub Shrub: 15,921 square feet
- Freshwater Wetland (indirect impact)
  - Scrub Shrub: 927 square feet
- Coastal Wetland (direct impact)
  - Vegetated Freshwater Intertidal (fringing marsh): 3,245 square feet
  - Tidal Riverine: 11,728 square feet
- Coastal Wetland (indirect Impact)
  - Vegetated Freshwater Intertidal: 8,000 square feet
  - Tidal Riverine: 4,000 square feet

The Department's Wetlands and Waterbodies Protection Rules, Chapter 310, require that the applicant meet the following standards:

A. Avoidance. No activity may be permitted if there is a practicable alternative to the project that would be less damaging to the environment. Each application for an individual Natural Resource Protection Act permit must provide an analysis of alternatives in order to demonstrate that a practicable alternative does not exist. The purpose of the proposed project is to replace an existing bridge with a new bridge that meets current safety and navigational standards. The applicant submitted an alternatives analysis for the proposed project dated June 26, 2012. The applicant considered a number of alternative options to the proposed project as follows:

1) No-Build Alternative. The applicant determined that a no-build alternative would not address the purpose of the proposed project. A no-build alternative would allow for a deteriorating existing bridge to continue carrying vehicular traffic across the Kennebec River resulting in an unacceptable and accruing risk of public safety.

2) Rehabilitation Alternative. The applicant considered rehabilitating the existing bridge to provide an additional 50-year life span. Rehabilitation would consist of substructure reconstruction, cleaning and painting of steel, replacement of the bridge railing, and replacement of a span truss diagonal and truss end portal brace. The applicant stated that if the bridge were to be rehabilitated, it would not meet the American Association of State Highway and Transportation Officials' current standards for width or load capacity. The applicant further stated that maintenance of the rehabilitated bridge would be more costly than maintenance costs of the proposed project. For these reasons, the applicant determined that a rehabilitation alternative would not be a viable option.

3) Replacement with a Moveable Bridge. The applicant considered replacing the existing bridge with a moveable bridge rather than the proposed fixed bridge. The applicant estimated the cost of a moveable bridge to be $8,000,000.00 more than the cost of the proposed fixed bridge. The applicant determined that replacing the existing bridge with a moveable bridge would be cost-prohibitive.

4) Road Alignment Designs. The applicant evaluated several upstream and downstream alternative designs to construct the approach roads to the proposed bridge. The applicant considered an on-alignment span and at locations 50 feet downstream, 250 feet upstream or downstream, and more than ¼ mile upstream or downstream. All of the considered locations were deemed to be unacceptable due to their potential to significantly impact a greater amount of historic resources and protected natural resources; significantly change existing traffic patterns; require acquisition of additional properties; require additional spans; and other site and cost constraints.

B. Minimal Alteration. The amount of wetland and waterbodies to be altered must be kept to the minimum amount necessary for meeting the overall purpose of the project. The applicant has minimized wetland impacts by utilizing as much existing roadway as practicable and by steepening the sideslopes of the road approaches from a 3:1 slope to a 2:1 slope. The applicant has reduced its wetland impacts by constructing the abutments for the proposed bridge in an upland location above the highest annual tide line, thus, avoiding riparian wetland impacts for abutment construction.

C. Compensation. Compensation is required to achieve the goal of no net loss of wetland functions and values. The applicant submitted a set of plan sheets and an impact summary for the proposed project site that identifies the areas of freshwater wetlands and

coastal wetlands, shown in Section 10 of the application. The applicant also submitted a Functional Assessment of on-site protected natural resources as Section 11 of the application. The assessment identified the following principal wetland functions that will be impacted as a result of the project: wildlife habitat, shoreline stabilization, groundwater discharge, and nutrient export.

The applicant submitted a mitigation plan to compensate for lost functions and values of impacted protected natural resources. The applicant has elected to make a contribution into the In-Lieu-Fee (ILF) program of $212,506.00 for permanent impacts to freshwater and coastal wetlands at the project site resulting from construction of the proposed bridge and road approaches.

As additional mitigation, the applicant proposes to remove all existing bridge piers to at least one foot below streambed elevation. The existing piers that are in or adjacent to the federal navigation channel will be removed to a depth of -22.69 mean low water. The applicant estimates that removal of these piers will restore approximately 4,237 square feet of tidal river bottom and approximately 82 square feet of coastal wetland (specifically, vegetated freshwater intertidal wetland).

The Department finds that the applicant has avoided and minimized wetland and waterbody impacts to the greatest extent practicable, and that the proposed project represents the least environmentally damaging alternative that meets the overall purpose of the project provided that prior to the start of construction, the applicant makes a contribution into the ILF program in the amount of $212,506.00 as described above.

7. OTHER CONSIDERATIONS:

The Department did not identify any other issues involving existing scenic, aesthetic, or navigational uses, soil erosion, habitat or fisheries, the natural transfer of soil, natural flow of water, water quality, or flooding.

BASED on the above findings of fact, and subject to the conditions listed below, the Department makes the following conclusions pursuant to 38 M.R.S.A. Sections 480-A et seq. and Section 401 of the Federal Water Pollution Control Act:

A. The proposed activity will not unreasonably interfere with existing scenic, aesthetic, recreational, or navigational uses provided that the applicant adheres to the historical mitigation measures outlined in the Memorandum of Agreement, and submits results of the archaeological to the Department for review as described in Finding 2.

B. The proposed activity will not cause unreasonable erosion of soil or sediment.

C. The proposed activity will not unreasonably inhibit the natural transfer of soil from the terrestrial to the marine or freshwater environment.

D. The proposed activity will not unreasonably harm any significant wildlife habitat, freshwater wetland plant habitat, threatened or endangered plant habitat, aquatic or adjacent upland habitat, travel corridor, freshwater, estuarine, or marine fisheries or other aquatic life provided that the applicant implements its noise mitigation measures which limits use of in-water noise-generating equipment; creates reduced noise level zones; monitors in-water construction sound levels and reports any fish mortality that is directly correlated to

or caused by the proposed project's construction activities to DMR as described in Finding 4; and that the applicant makes a contribution into the ILF program prior to the start of construction as described in Finding 6.

E. The proposed activity will not unreasonably interfere with the natural flow of any surface or subsurface waters.

F. The proposed activity will not violate any state water quality law including those governing the classifications of the State's waters.

G. The proposed activity will not unreasonably cause or increase the flooding of the alteration area or adjacent properties.

H. The proposed activity is not on or adjacent to a sand dune.

I. The proposed activity is not on an outstanding river segment as noted in Title 38 M.R.S.A. Section 480-P.

THEREFORE, the Department APPROVES the above noted application of the MAINE DEPARTMENT OF TRANSPORATION to construct a six-span fixed bridge with associated approach roadwork as described in Finding 1, SUBJECT TO THE ATTACHED CONDITIONS, and all applicable standards and regulations:

1. Standard Conditions of Approval, a copy attached.

2. The applicant shall take all necessary measures to ensure that its activities do not result in measurable erosion of soil on the site during the construction of the project covered by this approval.

3. Severability. The invalidity or unenforceability of any provision, or part thereof, of this License shall not affect the remainder of the provision or any other provisions. This License shall be construed and enforced in all respects as if such invalid or unenforceable provision or part thereof had been omitted.

4. The applicant shall adhere to the historical mitigation measures outlined in the Memorandum of Agreement. Mitigation measures include documenting the Maine Kennebec Bridge #2506 in accordance with Maine Historic Engineering Record standards and conducting a Phase III Archaeological Data Recovery on the Fort Richmond archaeological site. The applicant shall submit final results of the archaeological study along with MHPC's finding to the Department for review.

5. The applicant shall adhere to noise mitigation measures consisting of an in-water work window that allows for 17 hours of noise producing activity within a 10 day period of work, and migration zones with lower work sound levels in certain areas at any given time. Noise producing activity as a result of pile driving is anticipated to occur, on average, for 17 hours over a 10-day period (approximately 120 minutes per day). Variation in substrate and river conditions may require occasional longer periods of pile-driving; however, the applicant agrees to limit its operation of in-water noise-producing equipment, during pile driving activity to no more than 240 minutes on any one day. No work will occur on Sundays. Zones of lower noise levels will be made available during pile driving activities on each side of the river approximately 150 meters away from any given coffer dam. The

applicant shall also implement a noise monitoring program for pile driving activities to ensure that noise levels are below injury limits for potential endangered fish species within the project area.

6. The applicant shall report any fish mortality that is directly correlated to or caused by the proposed project's construction activities to the Maine Department of Marine Resources.

7. Prior to the start of construction, the applicant shall compensate for lost resource functions and values by making a contribution to the ILF program in the amount of $212,506.00. Payment shall be submitted to the ILF Program Administrator, Maine Department of Environmental Protection, 17 State House Station, Augusta, Maine 04333-0017.

THIS APPROVAL DOES NOT CONSTITUTE OR SUBSTITUTE FOR ANY OTHER REQUIRED STATE, FEDERAL OR LOCAL APPROVALS NOR DOES IT VERIFY COMPLIANCE WITH ANY APPLICABLE SHORELAND ZONING ORDINANCES.

DONE AND DATED IN AUGUSTA, MAINE, THIS 11th DAY OF October, 2012.

DEPARTMENT OF ENVIRONMENTAL PROTECTION

Filed
OCT 12 2012
State of Maine
Board of Environmental Protection

BY: Michael Kelus for
Patricia W. Aho, Commissioner

PLEASE NOTE THE ATTACHED SHEET FOR GUIDANCE ON APPEAL PROCEDURES...

BC/L25721AN&BN/ATS#74901&74902

Natural Resource Protection Act (NRPA) Standard Conditions

THE FOLLOWING STANDARD CONDITIONS SHALL APPLY TO ALL PERMITS GRANTED UNDER THE NATURAL RESOURCE PROTECTION ACT, TITLE 38, M.R.S.A. SECTION 480-A ET.SEQ. UNLESS OTHERWISE SPECIFICALLY STATED IN THE PERMIT.

A. Approval of Variations From Plans. The granting of this permit is dependent upon and limited to the proposals and plans contained in the application and supporting documents submitted and affirmed to by the applicant. Any variation from these plans, proposals, and supporting documents is subject to review and approval prior to implementation.

B. Compliance With All Applicable Laws. The applicant shall secure and comply with all applicable federal, state, and local licenses, permits, authorizations, conditions, agreements, and orders prior to or during construction and operation, as appropriate.

C. Erosion Control. The applicant shall take all necessary measures to ensure that his activities or those of his agents do not result in measurable erosion of soils on the site during the construction and operation of the project covered by this Approval.

D. Compliance With Conditions. Should the project be found, at any time, not to be in compliance with any of the Conditions of this Approval, or should the applicant construct or operate this development in any way other the specified in the Application or Supporting Documents, as modified by the Conditions of this Approval, then the terms of this Approval shall be considered to have been violated.

E. Time frame for approvals. If construction or operation of the activity is not begun within four years, this permit shall lapse and the applicant shall reapply to the Board for a new permit. The applicant may not begin construction or operation of the activity until a new permit is granted. Reapplications for permits may include information submitted in the initial application by reference. This approval, if construction is begun within the four-year time frame, is valid for seven years. If construction is not completed within the seven-year time frame, the applicant must reapply for, and receive, approval prior to continuing construction.

F. No Construction Equipment Below High Water. No construction equipment used in the undertaking of an approved activity is allowed below the mean high water line unless otherwise specified by this permit.

G. Permit Included In Contract Bids. A copy of this permit must be included in or attached to all contract bid specifications for the approved activity.

H. Permit Shown To Contractor. Work done by a contractor pursuant to this permit shall not begin before the contractor has been shown by the applicant a copy of this permit.

Revised (12/2011/DEP LW0428)

Environmental Summary Sheet

Pin: **12674.00** **Date Submitted: 3/11/13**
Town: **Richmond**
CPD Team Leader: Kristen Chamberlain
ENV Field Contact: Mike Clark

NEPA Complete: **11/27/12 –Individual Categorical Exclusion**

☒ **Section 106**

Section 106 Resources: Existing Bridge and Fort Richmond archaeology site are NR-Eligible. SHPO Concurrence for Adverse Effect. Memorandum of Agreement executed. Mitigation consisting of photo documentation of the existing bridge and Archaeology data recovery required. MHPC Archaeology staff is currently performing a Phase III Data Recovery excavation on the Fort Richmond site located on the North and South sides of the Richmond approach to the bridge. The Phase III Data Recovery work will be completed by July 1, 2013. Lead Archaeologist for this work is Leith Smith, who can be contacted at 207. 287.2132 or Leith.Smith@maine.gov.

☒ **Section 4(f) and 6(f)**

Section 4(f)

Review Complete-Programmatic 4(f). Terms required Phase 3 Archaeological Investigation/Recovery and photo documentation of the existing bridge.

Section 6(f)-Not applicable

☒ **Maine Department of Inland Fisheries and Wildlife Essential Habitat**

Not Applicable **Timing Window:** Not Applicable

☒ **Section 7-Formal Consultation**

Species of Concern: Atlantic Salmon DPS & Critical Habitat
Atlantic & Shortnose Sturgeon DPS

Comments/References: **Special Conditions apply. See ACOE permit and Special Provision 105.**

☒ **Maine Department of Conservation/Public Lands, Submerged Land Lease**

Not Applicable

☒ **Maine Land Use Regulation Commission**

Not Applicable

☒ **Maine Department of Environmental Protection-Individual Permit**

-Submit final results of the archaeological study along with MHPC's finding to the Department for review.
-Noise mitigation as described in EFH/Section 7 (no more than 240 minutes of pile driving in one day)
-Report any fish mortality directly correlated to or caused by construction activities to DMR
-ILF Payment-notify Deane prior to Intent
-See permit and Special Provision 105

**Applicable Standards and Permits are included with the contract*

☒ **Army Corps of Engineers, Section 10 of the Rivers and Harbors Act and Section 404 of the Clean Water Act.**

Individual Permit

-Work Start Notification and Compliance Certification Forms must be submitted by ENV Field Contact and/or Resident (copy needs to go to ENV CPD Team Leader).
-EFH Conservation Recommendations-see ACOE permit and Special Provision 105
-ILF Mitigation required-notify Deane Van Dusen upon intent to award
-3 seasons post-construction monitoring of temporary access road areas to ensure re-establishment of aquatic vegetation; mitigation may be required if re-establishment does not occur
-as built verifying removal of existing piers must be submitted to ACOE and NOAA within 60 days of work completion. Detailed requirements are listed in the ACOE permit
-See permit and Special Provision 105

**Applicable Standards and Permits are included with the contract*

☒ **Stormwater Review**-Not applicable

☒ **Special Provisions Required**

Special Provision 105-Timing of Work Restriction	N/A☐	Applicable☒
Special Provision 656-Erosion Control Plan	N/A☐	Applicable☒
Special Provision 203-Dredge Spec	N/A☐	Applicable☒
General Note for Hazardous Waste	N/A☒	Applicable☐
Special Provision 203-Hazardous Waste	N/A☒	Applicable☐
Special Provision 105.9	N/A☒	Applicable☐

**All permits and approvals based on plans/scope as of: 2/26/13*