F.H.W.A. REG. NO.	STATE	PROJECT NUMBER	SHEET NO.	TOTAL SHEETS
1	MAINE	BH-0164{3}	1	21

ER-0164{5}

STATE OF MAINE
DEPARTMENT OF TRANSPORTATION

CONVENTIONAL SIGNS

COUNTY LINES	TRAVELLED WAY - PROPOSED
TOWN LINES	UNDERGROUND UTILITIES - EXISTING
PROPERTY LINES	UNDERGROUND UTILITIES - PROPOSED
R/W LINES - EXISTING	RAILROAD - SINGLE TRACK
R/W LINES - NEW - ACCESS CONTROL	RAILROAD - DOUBLE TRACK
R/W LINES - NEW - NO ACCESS CONTROL	UTILITY POLE - EXISTING
CULVERT - EXISTING	UTILITY POLE - JOINT OCCUPANCY J
CULVERT - PROPOSED	PROPOSED UTILITY POLE - TEMPORARY x
CURBING - EXISTING	PROPOSED UTILITY POLE - PERMANENT
CURBING - PROPOSED	TREES hardwood softwood
TRAVELLED WAY - EXISTING	WOODS

REHABILITATION OF MOVABLE BRIDGE FOR MAINE-KENNEBEC BRIDGE OVER KENNEBEC RIVER BETWEEN THE TOWNS OF RICHMOND & DRESDEN SAGADAHOC & LINCOLN COUNTIES PROJECT NUMBERS BH-0164{3} & ER-0164{5} PROJECT LENGTH 0.1866 MILES

INDEX OF SHEETS

SHEET NO.	DESCRIPTION
1	TITLE SHEET
2	ESTIMATED QUANTITIES
3	REPAIRS ABUTMENT 1 & PIER 2
4	PHOTOS CONCRETE REPAIRS
5	CONCRETE REPAIRS PIER 2,3,4,6,7 & 8
6	LIGHTING PLAN
7	LIGHTING & POWER J-B LOCATION PLAN & DETAILS
8	MISCELLANEOUS ELECTRICAL DETAILS
9	ELECTRICAL DEMOLITION
10	CONTROL HOUSE & BRIDGE TENDERS BUILDING FLOOR PLANS
11	JUNCTION BOX INTERCONNECTION DIAGRAMS
12	CONTROL HOUSE CONSOLET LAYOUT & DETAILS
13	RELAY CABINET LAYOUT
14	WIRING SCHEMATIC
15	WEDGE & BRIDGE DRIVE MOTOR WIRING DIAGRAMS
16	CENTER BEARING ALTERATIONS REQUIRED
17	MACHINERY COVERS & TENSION RODS
18	MISCELLANEOUS INFORMATION
	BRIDGE STANDARD DETAILS
	HIGHWAY STANDARD DETAILS
19-21	APRIL 80 MAINTENANCE OF TRAFFIC IN CONSTRUCTION ZONES

SPECIFICATIONS

DESIGN.....A.A.S.H.T.O. Specifications for Highway Bridges, 1983 and Interim Specifications 1984 & 1985

CONTRACT.....State of Maine, Department of Transportation, Standard Specifications, Highways and Bridges, Revision of January 1984

MATERIALS

CONCRETE..... See Special Provisions

REINFORCING STEEL..... A.S.T.M. A615 Grade 60

STRUCTURAL STEEL..... A.S.T.M. A36

H. S. BOLTS..... A.S.T.M. A325 Type 1

BASIC ALLOWABLE STRESSES

CONCRETE..... f c = 1200 p.s.i. n= 10

REINFORCING STEEL ..... fs= 24,000 p.s.i.

STRUCTURAL STEEL ..... A36 ....fs= 20,000 p.s.i.
STRUCTURAL STEEL..... A325 ...fy= 25,000 p.s.i.

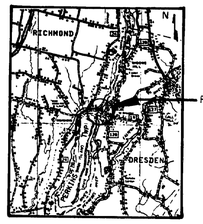

PROJECT BH-0164(3) & ER-0164(5)

1 0 1 2 3 4 5 MILLIMETERS
1 0 1 2 3 4 MILES

LOCATION MAP

As Built 2/15/90
RW Largo
Resident

Plans of the existing bridge are available for the contractor's reference at the Bridge Design Office in Augusta. The plans are reproductions of orignial drawings as prepared for the construction of the bridge and it is very unlikely that the plans will show any construction field changes or any alterations which may have been made to the bridge during its life span..

TRAFFIC DATA

A.D.T.	1983	1740
A.D.T.	2003	2090
D.H.V.		251
T. (%)		20
D. (%)		57
V.		
P.S.D. (%)		
18 KIPS	EQUIV. P20	141
18 KIPS	EQUIV. P25	139

NOTE

All work contemplated under this contract to be governed by and in conformity with the STANDARD SPECIFICATIONS (revision of January 1984) and supplementals thereto, except as modified on the plans and in the special provisions.

APPROVED:

STATE OF MAINE DEPARTMENT OF TRANSPORTATION	DATE
[signature] COMMISSIONER	1-6-88
Richard A. Coleman CHIEF ENGINEER	1-6-88

UNITED STATES
DEPARTMENT OF TRANSPORTATION
FEDERAL HIGHWAY ADMINISTRATION
REGION 1

APPROVED:

DIVISION ADMINISTRATOR DATE

100-146

537

BRUNING 44-132 63253

F.H.W.A. REG. NO.	STATE	PROJECT NUMBER	SHEET NO.	TOTAL SHEETS
1	MAINE	BH-0164(3)	2	21

ESTIMATED QUANTITIES

ITEM NO.	DESCRIPTION	QUANTITY	UNIT
503.12	REINFORCING STEEL, FABRICATED AND DELIVERED	9700	LB
503.13	REINFORCING STEEL, PLACING	9700	LB
506.142	FIELD PAINTING EXISTING STRUCTURAL STEEL	1	LUMP SUM
506.16	SURFACE PREPARATION OF EXISTING STRUCTURAL STEEL	3500	MAN HOURS
518.21	REHABILITATION OF STRUCTURAL CONCRETE SUBSTRUCTURE	3300	SQ. FT.
519.58	EPOXY INJECTION OF CRACKS	30	L.F.
626.34	SIGNAL POLE FOUNDATION	2	EA.
638.02	NAVIGATION LIGHTS	1	LUMP SUM
638.021	TEMPORARY NAVIGATION LIGHTS	1	LUMP SUM
639.19	FIELD OFFICE TYPE "B"	1	EA.
652.31	TYPE 1 BARRICADES	10	EA.
652.33	DRUMS	5	EA.
652.34	CONES	30	EA.
652.35	CONSTRUCTION SIGNS	155	S.F.
652.361	MAINTENANCE OF TRAFFIC CONTROL DEVICES	1	L.S.
652.38	FLAGGER	600	MAN HOURS
655.201	ELECTRICAL WORK	1	LUMP SUM
655.205	SUBMARINE CABLE	1	LUMP SUM
659.10	MOBILIZATION	1	LUMP SUM
800.40	OPERATING MACHINERY	1	LUMP SUM

REVISIONS
FIELD CHANGES

ESTIMATED QUANTITIES

ITEM NO.	DESCRIPTION	QUANTITY	UNIT

GENERAL SCOPE OF WORK

Described below is the general scope of work under this contract. This is for reference only. For detail scope and complete details refer to the contract plans and specifications.

1. STRUCTURAL:

Structural work includes the repair of deteriorated parts of bridge piers and abutments. Cleaning and painting of structural steel on movable and approach spans is also included. Two new reinforced concrete foundations for signal poles are to be constructed.

2. ELECTRICAL:

Electrical work consists of three main components. Bridge drive control upgrade, bridge traffic lighting and traffic control system, and the navigational lighting system.

The bridge drive control upgrade will basically consist of the removal of the existing control components and associated cabling and installing new updated system. Power for this system and the other bridge systems shall be provided by means of new submarine cables.

The bridge traffic and control systems will consist of replacement of existing cabling and fixtures with new modern components. In addition, new traffic control flashing lights shall be installed.

The navigational lighting system shall also consist of replacement of existing cabling and fixtures with new modern components. Also fender navigational lighting system shall be tied into the rest of the bridge lighting controls.

3. MECHANICAL:

A brief description of the work to be done under this contract includes the following:

Center Bearing:

Remove the split oil box for the center bearing. Jack up the swing span and support if with cribbing. Remove the top pivot casting and top and bottom bearing discs. Machine keyways and oil slots in the discs and castings of the center bearing. Reassemble the center bearing and lower the swing span back onto the bearing. Furnish and install new piping to add and drain oil from the bearing.

Span Drive

Remove link(s) from the silent chain drive and install new master of offset link as necessary to eliminate excess slack in the chain drive. Install guards over the chain drive and the gearing.

Wedge Drive

Remove four bent tension rods used to drive the end wedges. Readjust the length of the four tension rod assemblies so the rods operate properly while drive and withdrawing the wedges and so there is no excess slack in the tension rod assemblies. Replace tension rod support rollers.

Adjust length of all connecting rods in the wedge drive system to properly position the wedges with respect to the wedge guides and to properly position the connecting rods with respect to the levers when the wedges are fully driven.

Remove four end wedge guides and install new shims above each guide so that, when the wedges are fully driven, all four corners of the swing span are lifted to bring the roadway on the swing span to the same elevation as the roadways on the approach spans or as directed by the Engineer.

Remove link(s) from the silent chain drive and install new master or offset link as necessary to eliminate excess slack in the chain drive. Install guards over the chain drive and the gearing.

Balance Wheels:

Remove each balance wheel assembly. Reinstall each assembly with new shims and mounting bolts to provide proper clearance under each balance wheel when the bridge is in the closed position.

Centering Device:

Disassemble, clean, reassemble and adjust the centering device components so the drive will function properly.

Painting:

Clean and repaint all machinery items. Seal and protect all bearings and other machinery components during cleaning and painting to prevent any foreign matter from entering.

After all painting has been completed and accepted by the Engineer, disassemble the six wedges, clean all sliding surfaces thoroughly, relubricate and reassemble. Wedges, connecting rods and levers must be properly positioned when reassembled.

Tests:

After all rehabilitation work is completed, run tests on all operating systems on the bridge as directed by the Engineer.

CAD 20930_01

STATE OF MAINE
DEPARTMENT OF TRANSPORTATION

MAINE KENNEBEC BRIDGE

ESTIMATED QUANTITIES

SHEET 2 OF 21 AUGUSTA, MAINE

100-147

NGI JOB NO 20930

F.H.W.A. REG. NO.	STATE	PROJECT NUMBER	SHEET NO	TOTAL SHEETS
1	MAINE	BH-0164(3)	3	21

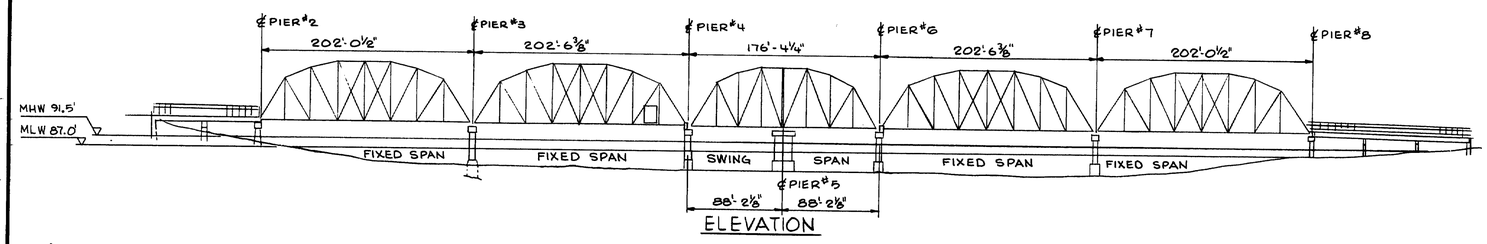

ELEVATION

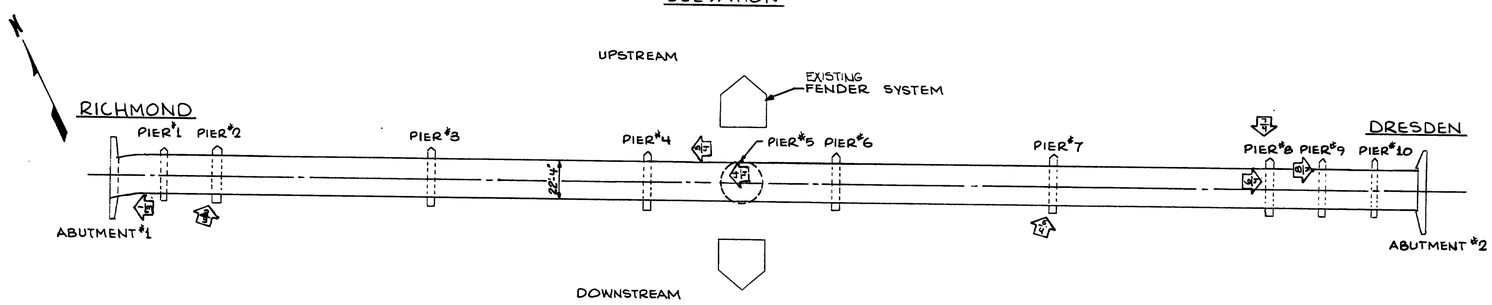

PLAN

GENERAL NOTES:

1.) 2/3 PHOTO INDENTIFICATION SHEET Nº

2.) DRAWINGS OF EXISTING STRUCTURE AND MACHINERY ARE AVAILABLE AT MDOT OFFICE FOR CONTRACTOR REVIEW. THE INFORMATION FROM THE EXISTING DRAWINGS SHOULD BE VERIFIED IN THE FIELD FOR CORRECTNESS.

3.) CONTRACTOR SHOULD VERIFY ALL DIMENSIONS IN THE FIELD.

REPAIR CONCRETE SPALLED AREA PER SPECIAL PROVISION SECTION 518. PAYMENT BY SQ.FT. & INCLUDES REMOVAL OF UNSOUND MATERIAL ITEM 518.21

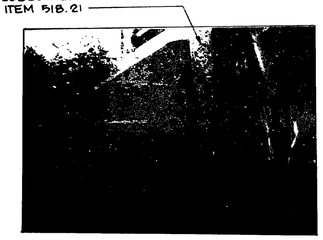

PHOTO 1

ABUTMENT #1

EXISTING CONDUIT

PHOTO 2

PIER #2

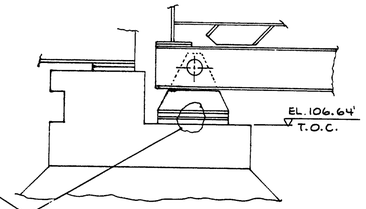

REPLACE BENT BOLT, NUT, & WASHER AS SHOWN ON PIER #2. REPLACE MISSING OR SHEARED ANCHOR BOLTS ON RICHMOND SIDE OF PIERS #2 & 10 AS REQUIRED. (MIN. 7 PLACES) PAYMENT INCIDENTAL TO ITEM #518.21.

PROJECT DESIGN ENGINEER		BY	DATE
PLANS	DESIGN - DETAILED	EAH	1-22-85
	CHECKED	BCH	4-27-85
	REVISIONS	CWH	
	FIELD CHANGES		

BRUNING 44-132 45710-1

Elizabeth A. Haynes 4/29/85

NEILL and GUNTER
Consulting and Design Engineers
P. O. Box 1959
PORTLAND, ME 04104

STATE OF MAINE
DEPARTMENT OF TRANSPORTATION

MAINE-KENNEBEC BRIDGE
OVER
KENNEBEC RIVER
BETWEEN THE TOWNS OF
RICHMOND & DRESDEN
SAGADAHOC & LINCOLN COUNTIES
REPAIRS
ABUTMENT-1 & PIER-2

SHEET 3 OF 21 AUGUSTA, MAINE JANUARY 1985

100-148

NGI JOB NO 20930

F.H.W.A. REG. NO.	STATE	PROJECT NUMBER	SHEET NO	TOTAL SHEETS
1	MAINE	BH-0164(3)	4	21

CONCRETE SPALLED EXPOSING REBAR. SEE DRAWING # 5

REPAIR PIER #2 UNDER NORTH GIRDER BEARING. OTHER CONCRETE REPAIR REQUIRED AS FOLLOWS:
1.) THE SOUTH BRIDGE SEAT ON ABUTMENT #1
2.) SOUTH END OF PIER #1 CAP.
CONCRETE REPAIR TO BE PAID UNDER ITEM #518.21

PHOTO #3
TYPICAL @ PIERS 2,3,4,6,7,&8

REMOVE UNSOUND CONCRETE. CLEAN & REMOVE DIRT & GREASE. SEE SPECIAL PROVISION SECTION 518. FOR PATCHING PROCEDURE. PAYMENT BY SQ. FT. AND INCLUDES REMOVAL OF UNSOUND MATERIAL. ITEM # 518.21

PHOTO #4
PIER #5 CENTER BEARING

LOOSE NUTS & WASHERS CLEAN AS REQ'D. PAYMENT AS LUMP SUM. ITEM # 506.16

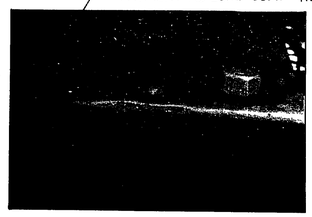

PHOTO #5
PIER #7

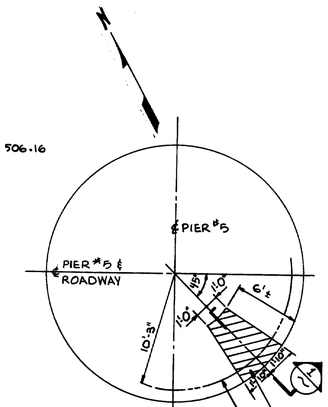

NOTE:
AS AN ALTERNATE TO SECTION-1, CORE DRILL THRU CONC. FOR SUBMARINE CABLE & SEAL ENDS AFTER CABLE INSTALLED. PAYMENT TO BE INCIDENTAL TO ITEM #655.205

PAYMENT TO BE INCIDENTAL TO ITEM #655.205

PLAN OF EXIST. PIER #5

REINFORCING SCHEDULE									
QTY	MARK Nº	LGTH	BEND	DIM'S.					SHAPE
			A	B	C	D	E	F	
4	P501	4'-7"	7	440	-	-	-	-	
2	P502	3'-0"	-	-	-	-	-	-	

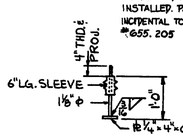

A.B. DETAIL

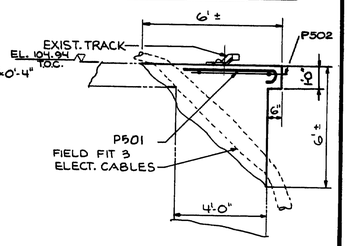

SECTION 1

NOTE:
TIE NEW REINFORCING TO EXISTING.

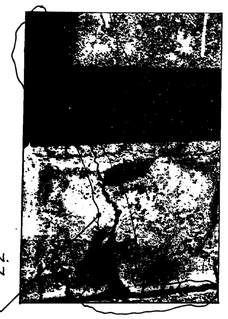

REPAIR ENTIRE CRACK USING EPOXY INJECTION. SEE SPECIAL PROVISION SECTION 519. PAYMENT BY LINEAL FOOT. ITEM # 519.58

PHOTO #6
PIER #8

REMOVE UNSOUND CONCRETE. TROWEL APPLY GROUT PATCH SEE SPECIAL PROVISION SECTION 518. SEE DETAIL "A" RIGHT FOR AREA. PAYMENT BY SQ.FT. AND INCLUDES REMOVAL OF UNSOUND MATERIAL.

PHOTO #7
PIER #8

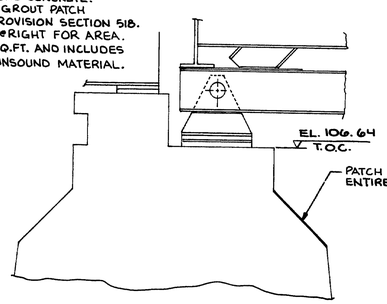

DETAIL A

VERTICAL CRACKS ON PIER #9 TO BE REPAIRED BY EPOXY INJECTION. SEE SPECIAL PROVISION 519. PAYMENT BY LINEAL FOOT. ITEM # 519.58

CRACK ON DRESDEN SIDE

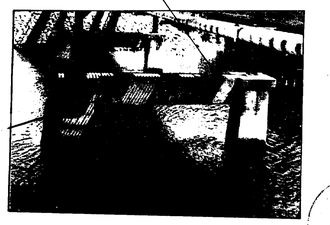

PHOTO #8
PIERS #9 & #10

Elizabeth A. Hayden 4/25/85

SEQUENCE
1.) REMOVE TRACK SEGMENT.
2.) REMOVE CONC. TAKING CARE TO SALVAGE AS MUCH REINF. AS POSSIBLE TO FIELD FIT 3 SUBMARINE CABLES SHOWN ON ELECTRICAL DRAWING SH. 7
3.) SET SUBMARINE CABLES.
4.) FIT IN NEW REBAR FOR PATCH. SET NEW ANCHOR BOLTS W/SLEEVES FOR TRACK. POUR PATCH.
5.) REPLACE TRACK SEGMENT. LEVEL TO MATCH EXIST. TRACK.
6.) WORK TO BE IN CONFORMANCE WITH SPECIAL PROVISION 518.

100-149

PROJECT DESIGN ENGINEER		BY	DATE
PLANS	DESIGN - DETAILED	EAH	1-22-85
	CHECKED	BCH	1-27-85
	REVISIONS	CWH	
	FIELD CHANGES		

BRUNING 44-132 457101-1

NEILL and GUNTER
Consulting and Design Engineers
P O Box 1959
PORTLAND, ME 04104

STATE OF MAINE
DEPARTMENT OF TRANSPORTATION

MAINE KENNEBEC BRIDGE
OVER
KENNEBEC RIVER
BETWEEN THE TOWNS OF
RICHMOND & DRESDEN
SAGADAHOC & LINCOLN COUNTIES

PHOTOS
CONCRETE REPAIRS

SHEET 4 OF 21 AUGUSTA, MAINE JANUARY 1985

NGI JOB NO 20930

F.H.W.A. REG. NO.	STATE	PROJECT NUMBER	SHEET NO	TOTAL SHEETS
1	MAINE	BH-0164(3)	5	21

PHOTO #9

TYPICAL @ PIERS 2,3,4,6,7,8

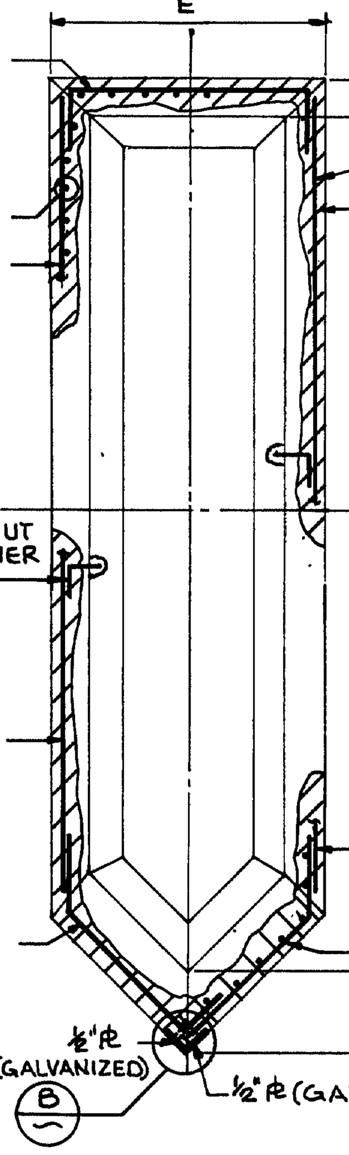

PLAN

REPAIR IS TYPICAL FOR PIERS 2,3,4,6,7,&8 SEE SCHEDULE AT LEFT FOR ESTIMATED DIMENSIONS.

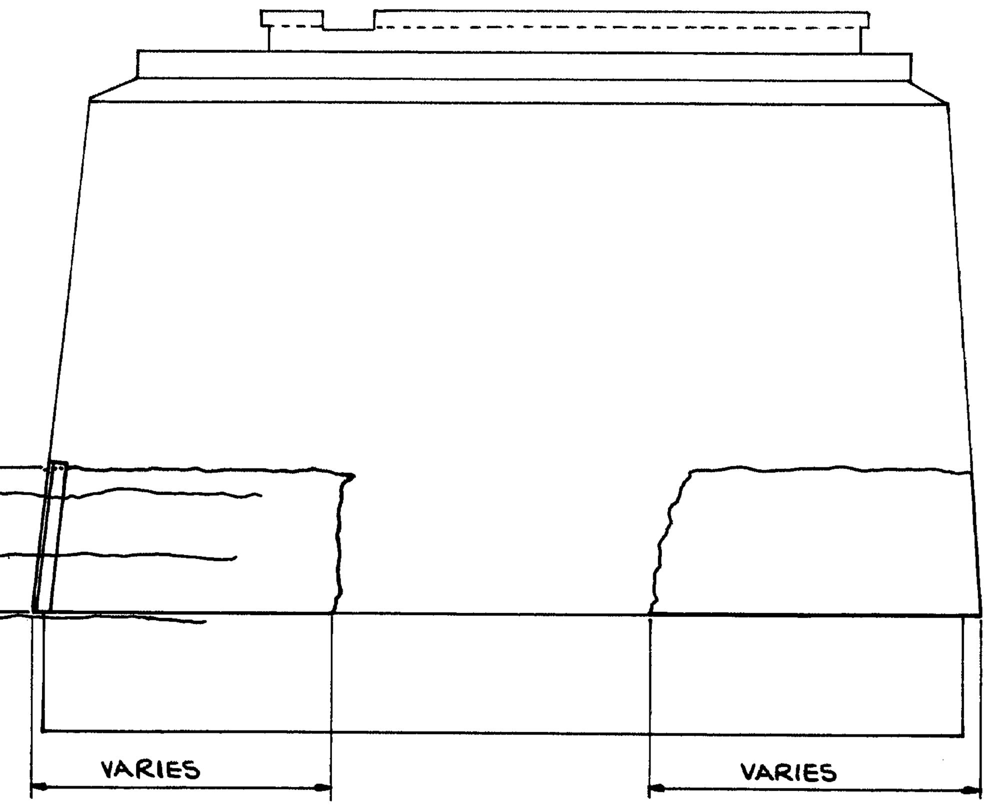

SIDE ELEVATION

PIER SCHEDULE

PIER №	DIMENSIONS "A"	"B"	"C"	"D"	"E"
2	1'-0"	13'-2"	16'-4¾"	1'-0"	8'-7"
3	11¼"	12'-8"	15'-9"	4'-10"	9'-0"
4	11¼"	12'-8"	15'-9"	4'-8"	9'-0"
6	1'-1½"	13'-10¼"	16'-8"	4'-7"	10'-3"
7	9½"	13'-11"	16'-7"	4'-9½"	10'-7"
8	1'-0"	13'-2"	16'-4¾"	1'-0"	8'-7"

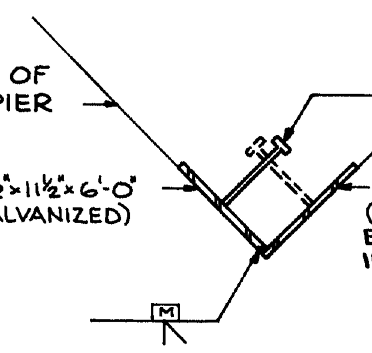

DETAIL B

REINFORCING SCHEDULE

STRAIGHT BARS

MARK №	Pier 2 LGTH.	2 QTY.	3 LGTH	3 QTY.	4 LGTH.	4 QTY.	6 LGTH	6 QTY.	7 LGTH	7 QTY.	8 LGTH	8 QTY.
P601	29-7	7	6-6	7	21-7	7	7-6	7	30-6	7	29-7	7
P602	–	–	8-0	7	–	–	8-0	7	-	-	-	-
P603	8-1	7	9-4	7	9-4	7	10-2	7	10-6	7	8-1	7
P604	5-6	78	5-6	58	5-6	48	5-6	62	5-6	88	5-6	78
P605	12-1	7	12-6	7	12-6	7	13-6	7	14-1	7	12-1	7
P606	29-7	7	6-6	7	21-7	7	7-6	7	30-6	7	29-7	7
P607	-	-	8-0	7	-	-	8-0	7	-	-	-	-
P608	7-1	7	8-4	7	8-4	7	9-2	7	9-6	7	7-1	7
P609	2-3	78	2-3	58	2-3	48	2-3	62	2-3	88	2-3	78

BENT BARS

MARK №	2 A	2 B	2 C	3 A	3 B	3 C	4 A	4 B	4 C	6 A	6 B	6 C	7 A	7 B	7 C	8 A	8 B	8 C	SHAPE
P601	-	-	-	-	-	-	-	-	-	-	-	-	-	-	-	-	-	-	
P602	-	-	-	-	-	-	-	-	-	-	-	-	-	-	-	-	-	-	
P603	2-0	5-1	1-0	2-0	6-4	1-0	2-0	6-4	1-0	2-0	7-2	1-0	2-0	7-6	1-0	2-0	5-1	1-0	∨
P604	-	-	-	-	-	-	-	-	-	-	-	-	-	-	-	-	-	-	
P605	2-0	8-1	2-0	2-0	8-6	2-0	2-0	8-6	2-0	2-0	9-6	2-0	2-0	10-1	2-0	2-0	8-1	2-0	⊓
P606	-	-	-	-	-	-	-	-	-	-	-	-	-	-	-	-	-	-	
P607	-	-	-	-	-	-	-	-	-	-	-	-	-	-	-	-	-	-	
P608	2-0	5-1	-	2-0	6-4	-	2-0	6-4	-	2-0	7-2	-	2-0	7-6	-	2-0	5-1	-	⅃
P609	1-0	1-3	-	1-0	1-3	-	1-0	1-3	-	1-0	1-3	-	1-0	1-3	-	1-0	1-3	-	L

NOTE : CUTTING OF RE-BAR TO BE INCIDENTAL TO PAY ITEM # 518.21. MINIMUM PAYMENT TO BE FOR BARS SHOWN IN REINFORCING SCHEDULE. LENGTHS & QUANTITIES SHOWN ARE ESTIMATED & DEPEND UPON EXTENT OF CONCRETE REMOVED. UNUSED OR CUT-OFF BARS ARE PROPERTY OF THE DEPARTMENT. PAYMENT FOR PLACEMENT TO BE FOR ACTUAL AMOUNT PLACED INCLUDING CUT-OFFS.

REINFORCING SCHEDULE

QTY	MARK №	LGTH	BEND DIM'S. A	B	C	D	E	F	SHAPE
16	SP601	5'-6	1-0	4-6	-	-	-	-	L
10	SP301	7'-9	4½	1-9	1-9	1-9	1-9	4½	⧠
20	SP501	3'-6	-	-	-	-	-	-	–

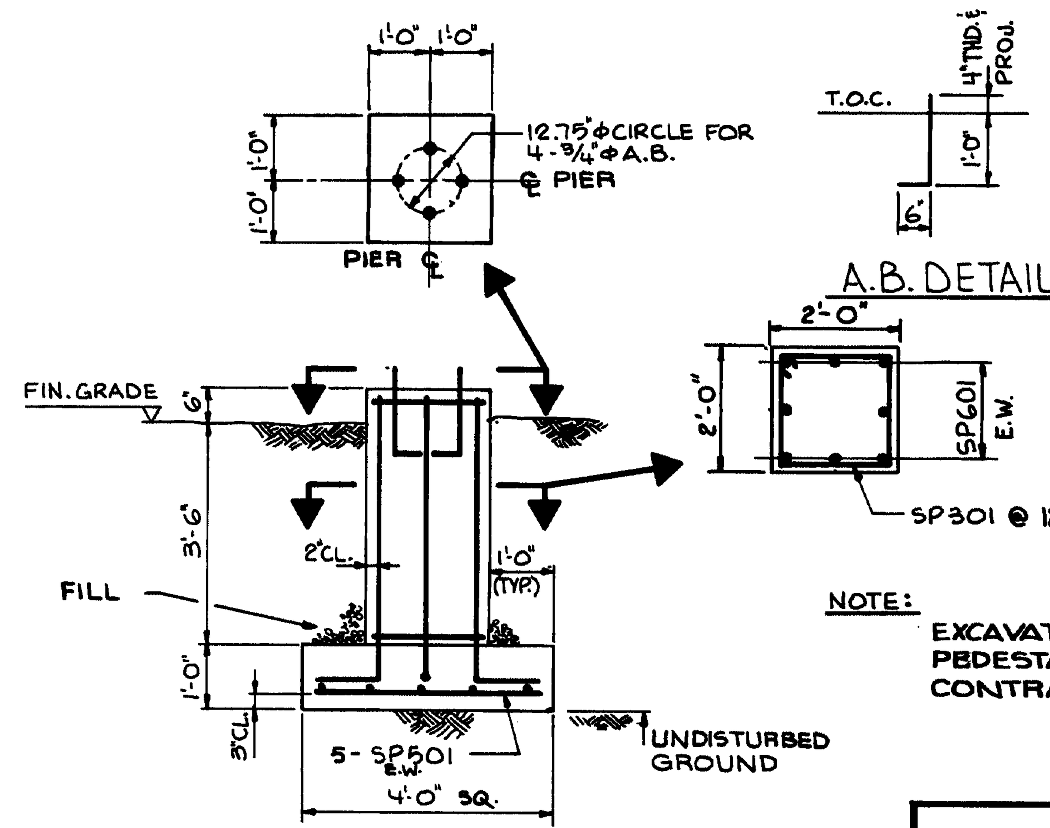

NOTE: EXCAVATION & BACKFILL FOR PEDESTALS TO BE INCIDENTAL TO CONTRACT ITEM # 626.34.

SIGNAL POLE FOUNDATION

FOR LOCATION SEE MISC. ELECTRICAL DETAILS SHEET. № 8 (2-REQ'D.)

Used 24" Round Bases

PROJECT DESIGN ENGINEER	BY	DATE
PLANS DESIGN-DETAILED	EAH BCH	1-23-85
CHECKED	EAH	1-29-85
REVISIONS		
FIELD CHANGES		

BRUNING 44-132 45710-1

100-150

Elizabeth A. Hayes 4/29/85

NEILL and GUNTER
Consulting and Design Engineers
P. O. Box 1959
PORTLAND, ME 04104

STATE OF MAINE
DEPARTMENT OF TRANSPORTATION

MAINE-KENNEBEC BRIDGE
OVER
KENNEBEC RIVER
BETWEEN THE TOWNS OF
RICHMOND & DRESDEN
SAGADAHOC & LINCOLN COUNTIES
CONCRETE REPAIRS
PIERS - 2,3,4,6,7,8

SHEET 5 OF 21 AUGUSTA, MAINE JANUARY 1985

NGI JOB NO 20930

F.H.W.A. REG. NO.	STATE	PROJECT NUMBER	SHEET NO.	TOTAL SHEETS
1	MAINE	BH-0164 (5)	6	21

ER-0164 (5)

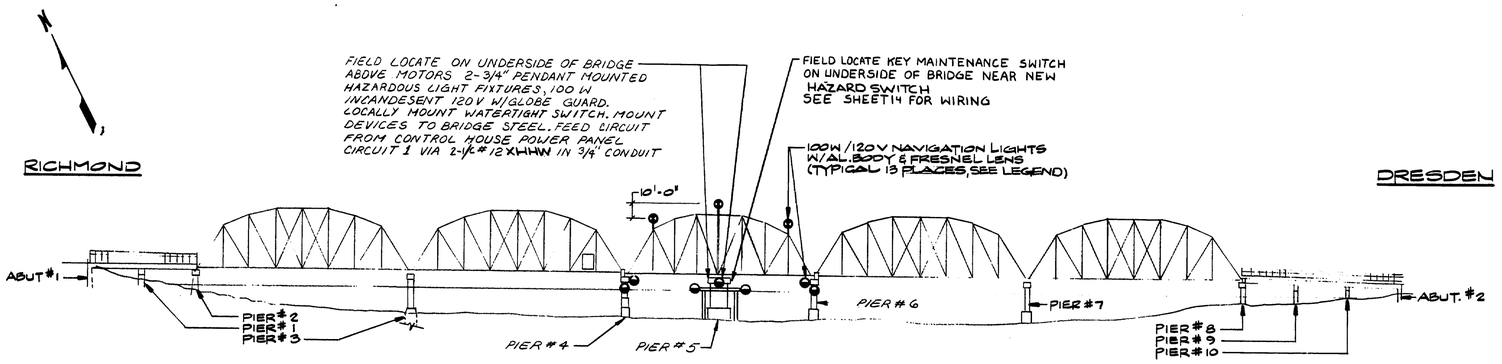

SECTION 1/1
N.T.S.

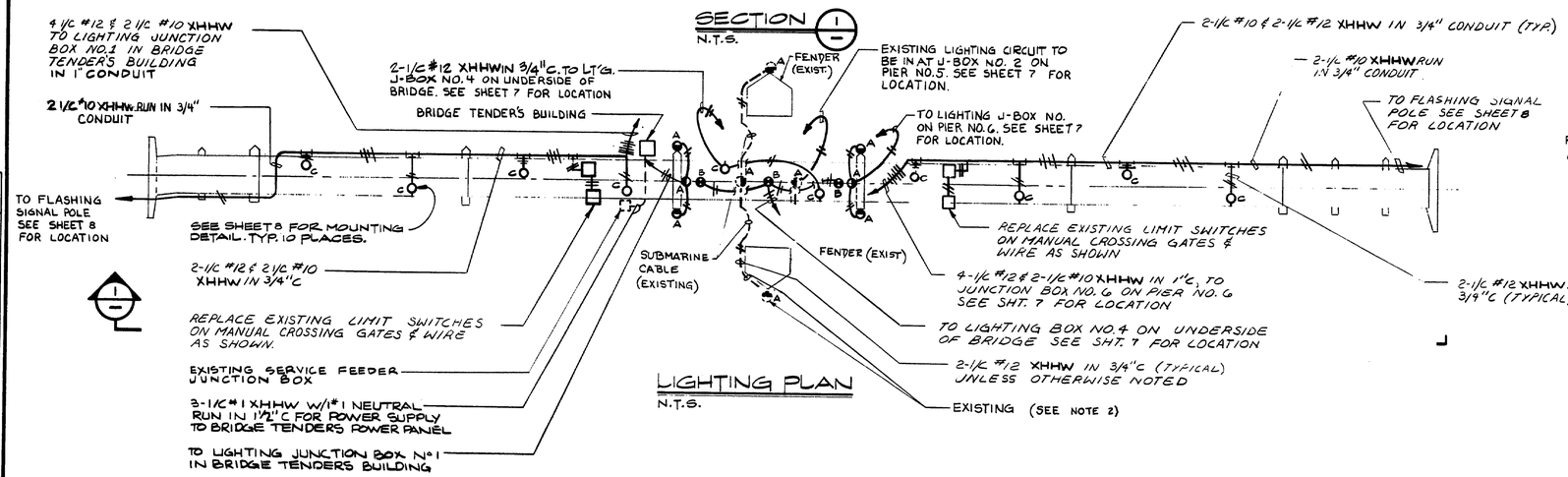

LIGHTING PLAN
N.T.S.

LEGEND

A — RED 180° SECTORED POSITIONED AS REQUIRED ON PIERS.

B — RED / GREEN — ALTERNATE RED & GREEN, 60° SECTORS AT 90° RED ONE OR TWO SECTORS, GREEN TWO SECTORS.

C — 150W HIGH PRESSURE SODIUM FIXT. WALL MOUNTED W/POLYCARBONATE REFRACTOR & PHOTOCELL. 208V ROADWAY LIGHTING

SHORT SLASH DENOTES NEUTRAL CONDUCTOR
LONG SLASH DENOTES HOT CONDUCTOR

NOTES

1. ALL CONDUIT TO BE PVC-SCH. 80 HEAVY WALL.
2. NAVIGATIONS LIGHTS ON THE FENDER & PIER #5 (TOTAL 4 LIGHTS) ARE EXISTING & SHALL REMAIN. THEIR CIRCUITS SHALL BE REWIRED INTO J-BOX #2 AS PART OF THE NEW NAVIGATION LIGHT CONTROL SYSTEM.

PROJECT DESIGN ENGINEER	BY	DATE
PLANS — DESIGN - DETAILED	FTK	11-18-86
CHECKED	TJW	11-22-86
REVISIONS		
FIELD CHANGES		

BRIRING 44-132-457101

NEILL and GUNTER
Consulting and Design Engineers
P. O. Box 1959
PORTLAND, ME 04104

STATE OF MAINE
DEPARTMENT OF TRANSPORTATION

MAINE KENNEBEC BRIDGE
OVER KENNEBEC RIVER
BETWEEN THE TOWNS OF
RICHMOND SAGADAHOC CO. &
DRESDEN LINCOLN CO.
LIGHTING PLAN
& CONDUIT RUNS

SHEET 6 OF 21 AUGUSTA, MAINE

100-151

NGI JOB NO. 20930 NGI DWG NO C-501

F.H.W.A. REG. NO.	STATE	PROJECT NUMBER	SHEET NO	TOTAL SHEETS
1	MAINE	BH-0164 (5)	7	21

ER-0164 (5)

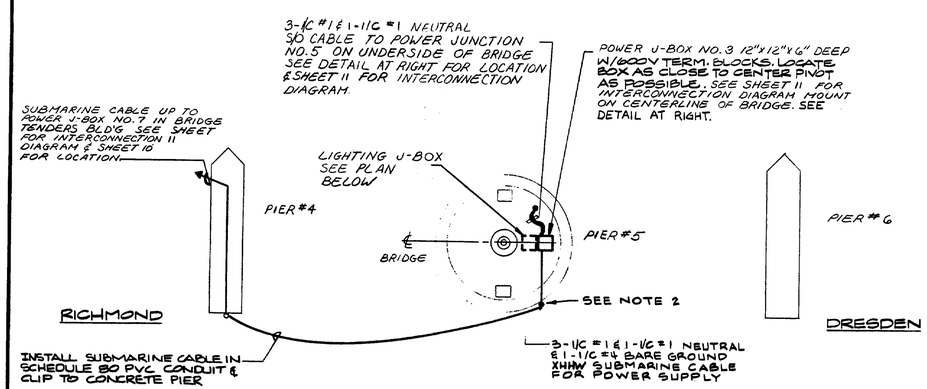

POWER J-BOX LOCATION PLAN

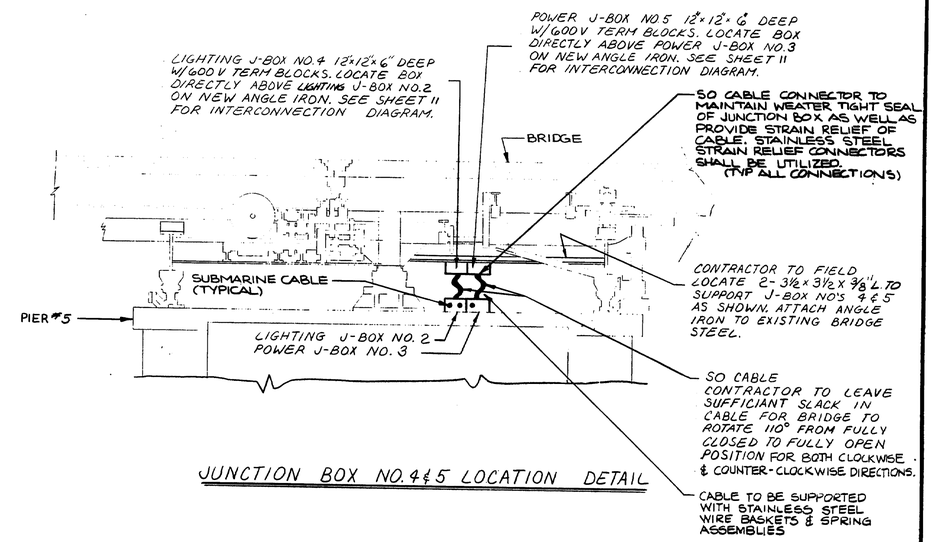

JUNCTION BOX NO.4&5 LOCATION DETAIL

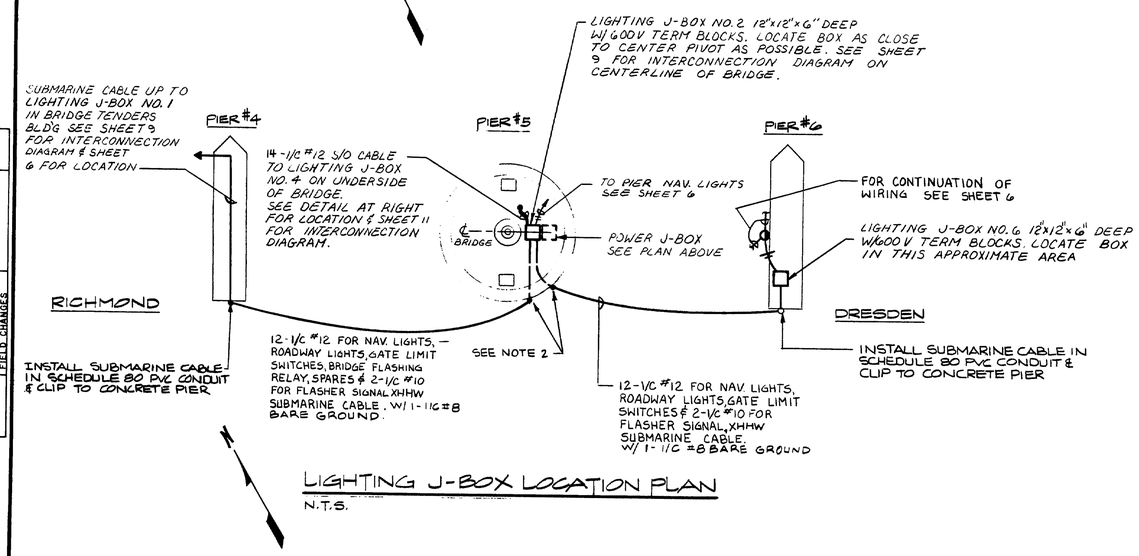

LIGHTING J-BOX LOCATION PLAN

N.T.S.

NOTES:

1. ALL JUNCTION BOXES TO BE NEMA 4X
2. SUBMARINE CABLE SHALL BE INSTALLED IN SCH-80 PVC CONDUIT BENEATH BRIDGE RACK ASSEMBLY. CONDUIT SHALL BE EMBEDDED INTO CONCRETE PIER & OFFSET UP TO APPROXIATE JUNCTION BOX

PROJECT DESIGN ENGINEER	BY	DATE
DESIGN - DETAILED	CWD	1/96
CHECKED	MM	4-26-96
REVISIONS		9-26-96
FIELD CHANGES		

PLANS

NEILL and GUNTER
Consulting and Design Engineers
P.O. Box 1959
PORTLAND, ME 04104

STATE OF MAINE
DEPARTMENT OF TRANSPORTATION

MAINE KENNEBEC BRIDGE
OVER KENNEBEC RIVER
BETWEEN THE TOWNS OF
RICHMOND SAGADAHOC CO. &
DRESDEN LINCOLN CO.
LIGHTING & POWER J-B LOCATION
PLANS & DETAILS

SHEET 7 OF 21 AUGUSTA, MAINE

100-152

NGI JOB NO. 20930 NGI DWG. NO. C-502

PRELIM. BY_____ DATE_____ PROJ. NO. _____ FILE NO. _____ OF _____
FINAL CHK. BY_____ DATE_____ LOCATION _____ SH. NO. _____ OF _____
ITEM NO. _____ SUBJECT _____

REEL #100

153-
241

STATE OF MAINE — DEPARTMENT OF TRANSPORTATION

F.H.W.A. REG. NO.	STATE	PROJECT NUMBER	SHEET NO.	TOTAL SHEETS
1	MAINE	BH-0164(5)	8	21

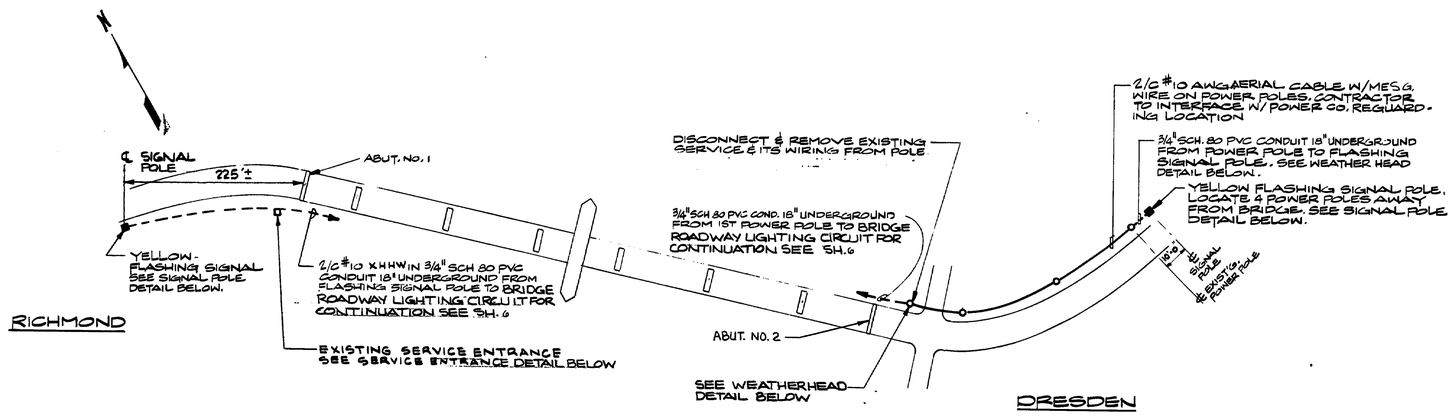

KENNEBEC BRIDGE
SIGNAL POLE LOCATION
N.T.S.

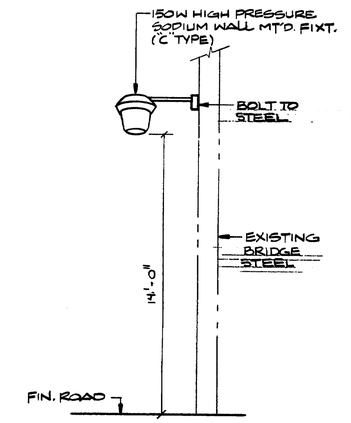

TYPICAL ROAD LIGHTING
MOUNTING DETAIL
N.T.S.

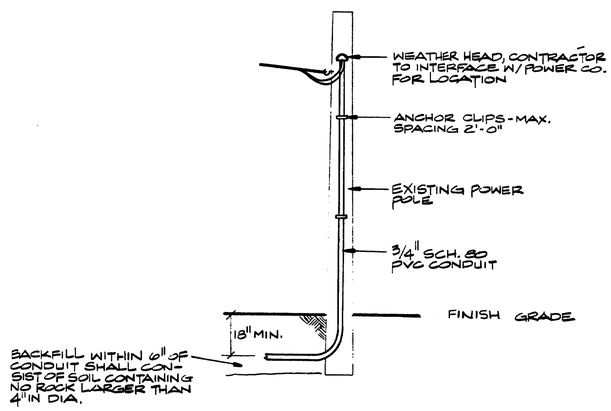

WEATHER HEAD DETAIL
N.T.S.

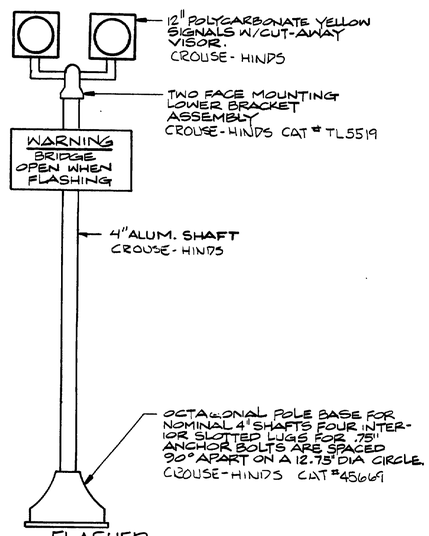

FLASHER
SIGNAL POLE DETAIL
N.T.S.

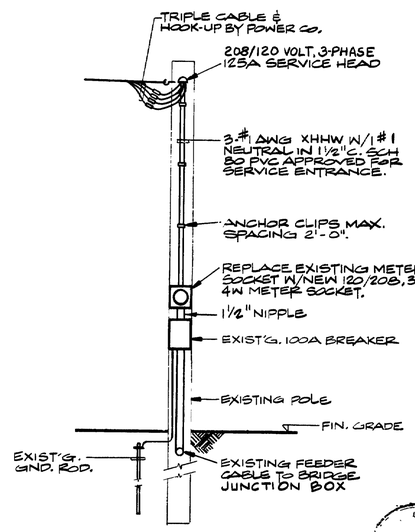

SERVICE ENTRANCE DETAIL
N.T.S.

PROJECT DESIGN ENGINEER	BY	DATE
PLANS DESIGNED, DETAILED	RJD	4-18-95
CHECKED	CTG/MHJ	4-24-95
REVISIONS	MHJ	
FIELD CHANGES		

BRUNING 44-132 457101

NEILL and GUNTER
Consulting and Design Engineers
P. O. Box 1959
PORTLAND, ME 04104

STATE OF MAINE
DEPARTMENT OF TRANSPORTATION

MAINE KENNEBEC BRIDGE
OVER KENNEBEC RIVER
BETWEEN THE TOWNS OF
RICHMOND SAGADAHOC CO. &
DRESDEN LINCOLN CO.
MISC. ELECTRICAL
DETAILS

SHEET 8 OF 21 AUGUSTA, MAINE

100-153

NGI JOB NO. 20930 NGI DWG. NO. C-503

F.H.W.A. REG. NO.	STATE	PROJECT NUMBER	SHEET NO	TOTAL SHEETS
1	MAINE	BH-0164 (3)	9	21

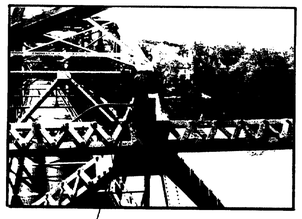

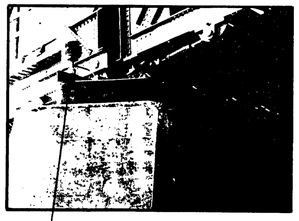

REMOVE NAVIGATION LIGHTING ON TOP OF BRIDGE AND PIERS (TYP.) EXCEPT NEW ONES INSTALLED ON FENDER SYSTEM. (TOTAL 4 TO REMAIN)

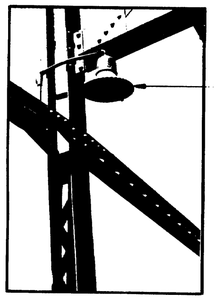

REMOVE WALKWAY LIGHTING (TYP.)

LIGHTING DEMOLITION

NOTE:
REMOVE CONDUIT & WIRING BACK TO ITS SOURCE OF POWER (TYP EACH PHOTO)

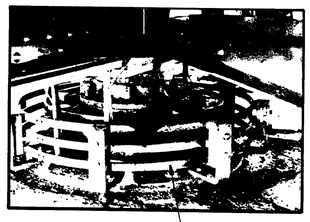

REMOVE COLLECTOR RINGS ON PIER NO. 5.

REMOVE J-BOXES ON PIERS (TYP.)

MISC. WIRING DEMOLITION

NOTE:
REMOVE CONDUIT & WIRING BACK TO ITS SOURCE OF POWER (TYP. EACH PHOTO).

REMOVE 3 PHASE DISCONNECT AND ITS WIRING.

REMOVE SINGLE PHASE DISCONNECT AND ITS WIRING.

REMOVE CIRCUIT BREAKER PANEL & ITS WIRING BACK TO ITS SOURCE.

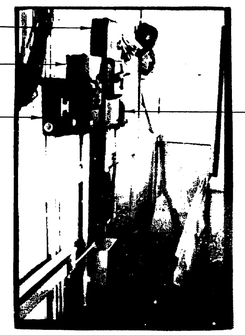

REMOVE ELECTRIC HEAT DISCONNECT SWITCH.

NOTE:
REMOVE CONDUIT & WIRING BACK TO ITS SOURCE OF POWER

BRIDGE TENDERS BUILDING DEMOLITION

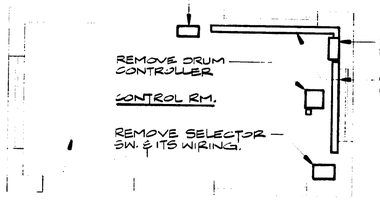

REMOVE POWER & CONTROL PNL. & WIRING OF ALL CIRCUITS.

REMOVE RESISTOR BANK & ITS WIRING

REMOVE DRUM CONTROLLER

REMOVE WIRE DUCT & ITS WIRING

CONTROL RM.

REMOVE SELECTOR SW. & ITS WIRING.

REMOVE EXISTING LIGHT FIXTURES, SWITCHES, RECEPTACLES & WIRING BACK TO THE SOURCE OF POWER.

CONTROL HOUSE DEMOLITION PLAN

N.T.S.

PROJECT DESIGN ENGINEER		BY	DATE
PLANS	DESIGN - DETAILED	FTA/MN	4-18-85
	CHECKED	MAN	4-25-85
	REVISIONS		
	FIELD CHANGES		

NG
NEILL and GUNTER
Consulting and Design Engineers
P O Box 1959
PORTLAND, ME 04104

STATE OF MAINE
DEPARTMENT OF TRANSPORTATION

MAINE KENNEBEC BRIDGE
OVER KENNEBEC RIVER
BETWEEN THE TOWNS OF
RICHMOND SAGADAHOC CO. &
DRESDEN LINCOLN CO.
ELEC. DEMOLITION

SHEET 9 OF 22 AUGUSTA, MAINE

100-154

NGI JOB NO. 20930 NGI DWG. NO. C-504

F.H.W.A. REG. NO.	STATE	PROJECT NUMBER	SHEET NO	TOTAL SHEETS
1	MAINE	BH-0164-(3)	10	21

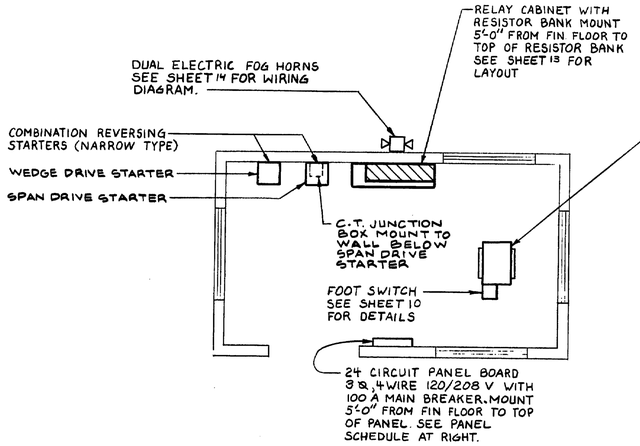

CONTROL HOUSE
EQUIPMENT LAYOUT
N.T.S.

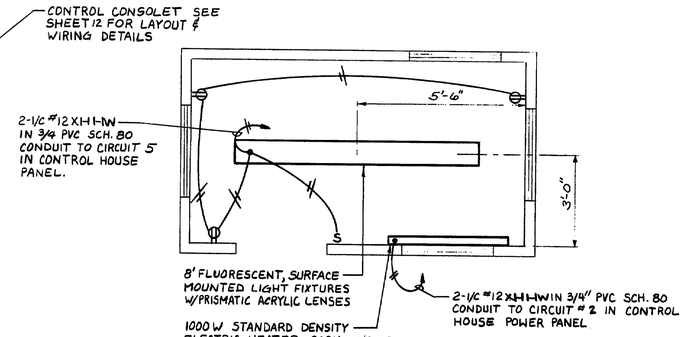

CONTROL HOUSE
LIGHTING & HEATING PLAN
N.T.S.

BRIDGE TENDER POWER PANEL

MAIN SUPPLY: 120/208V, 3Ø, 4 WIRE
MAINS: 125A BUS, 24 CKT. PNL.
BRANCH BREAKERS: AS NOTED

DESCRIPTION	LOAD A	LOAD B	LOAD C	BRK. AMP.		N		BRK. AMP.	LOAD A	LOAD B	LOAD C	DESCRIPTION
NAVIGATION LIGHTS	1300			15	1		2	20	750			208V ROADWAY LIGHTING
FLASHING ROADWAY LIGHTS				20	3					750		
EXISTING LIGHTING				20	5		6	20				EXISTING ELECTRIC HEATERS
					7							
					9		10	15				SPAN BRAKE
					11		12					
					13		14					
					15		16					
					17		18					
FEEDER FOR CONTROL HOUSE POWER PANEL-2				100	19		20					
							22					
							24					
PHASE LOAD												
TOTAL LOAD:												
TOTAL AMP:												

CONTROL HOUSE POWER PANEL

MAIN SUPPLY: 120/208V, 3Ø, 4 WIRE
MAINS: 125A BUS, 24 CKT. PNL.
BRANCH BREAKERS: AS NOTED

DESCRIPTION	LOAD A	LOAD B	LOAD C	BRK. AMP.		N		BRK. AMP.	LOAD A	LOAD B	LOAD C	DESCRIPTION
UNDERBRIDGE LIGHTING	200			15	1		2	15	500			1000 W 208V ELECTRIC HEATER
CONTROL POWER				20	3					500		
CONTROL HOUSE LTG. & RECPT.				15A	5		6					
					7		8					
					9		10					
					11		12					
					13		14					
					15		16					
					17		18					
15 H.P. SWING SPAN MOTOR & PHASE REVERSAL MONITOR				70	19		20	40				5 H.P. WEDGE DRIVE MOTOR
PHASE LOAD												
TOTAL LOAD:												
TOTAL AMP:												

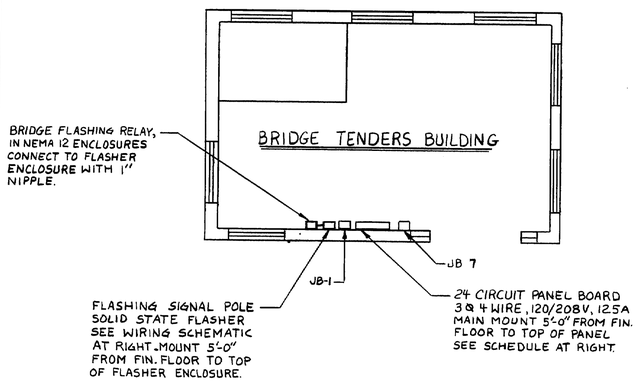

BRIDGE TENDERS BUILDING
EQUIPMENT LAYOUT

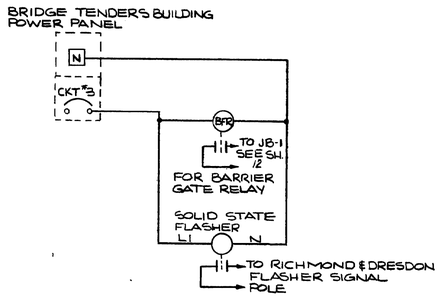

BRIDGE FLASHER RELAY
SCHEMATIC DIAGRAM

PROJECT	DESIGN ENGINEER	BY	DATE
PLANS	DESIGN - DETAILED	CTA/MJ	4-18-95
	CHECKED		4-25-95
	REVISIONS		
	FIELD CHANGES		

NEILL and GUNTER
Consulting and Design Engineers
P. O. Box 1959
PORTLAND, ME 04104

STATE OF MAINE
DEPARTMENT OF TRANSPORTATION

MAINE KENNEBEC BRIDGE
OVER KENNEBEC RIVER
BETWEEN THE TOWNS OF
RICHMOND SAGADAHOC CO. &
DRESDEN LINCOLN CO
CONTROL HOUSE
& BRIDGE TENDERS BUILDING
FLOOR PLANS

SHEET 10 OF 21 AUGUSTA, MAINE

100-155

NGI JOB NO. 20930 NGI DWG NO. C-505

F.H.W.A. REG. NO.	STATE	PROJECT NUMBER	SHEET NO	TOTAL SHEETS
1	MAINE	BH-0164(5)	11	21

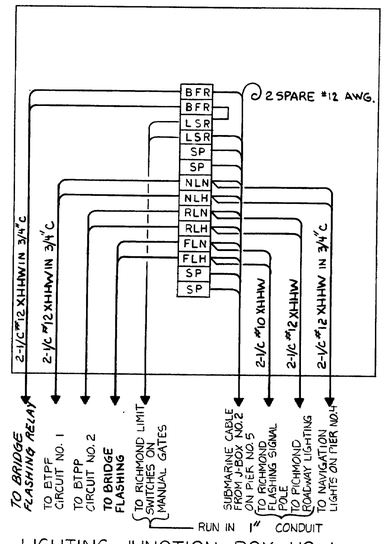

LIGHTING JUNCTION BOX NO. 1
@ BRIDGE TENDERS BLD'G

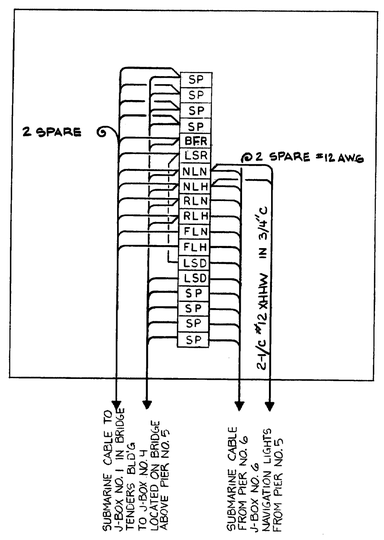

LIGHTING JUNCTION BOX NO. 2
@ PIER NO. 5

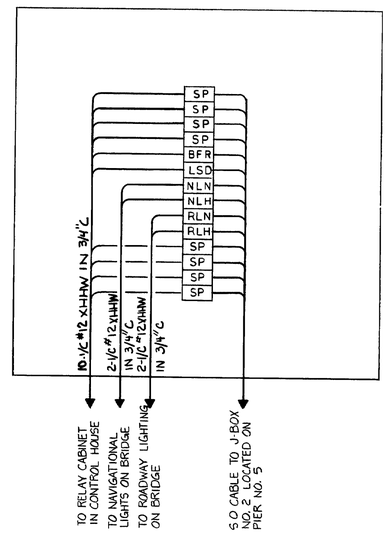

LIGHTING JUNCTION BOX NO. 4
@ CENTER OF BRIDGE

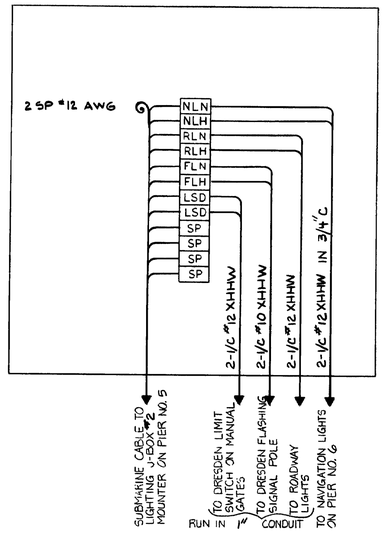

LIGHTING JUNCTION BOX NO. 6
@ PIER NO. 6

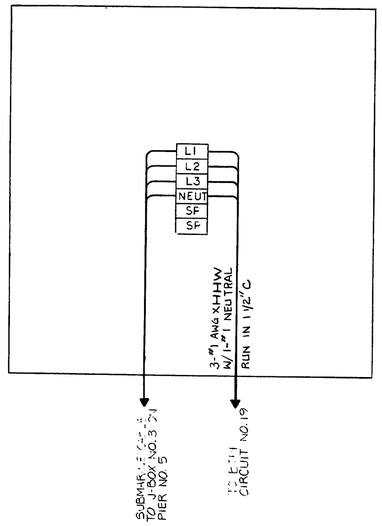

POWER JUNCTION BOX NO. 7
@ BRIDGE TENDERS BLD'G

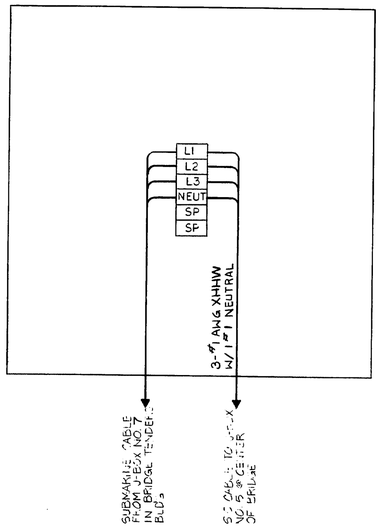

POWER JUNCTION BOX NO. 3
@ PIER NO. 5

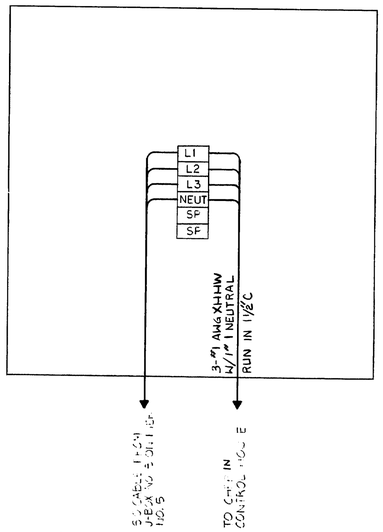

POWER JUNCTION BOX NO. 5
@ CENTER OF BRIDGE

NLN NAVIGATION LIGHTS NEUTRAL
NLH NAVIGATION LIGHTS HOT
RLN ROADWAY LIGHTING NEUTRAL
RLH ROADWAY LIGHTING HOT
FLN FLASHING SIGNAL POLE NEUTRAL
FLH FLASHING SIGNAL POLE HOT
LSD LIMIT SWITCH (DRESDEN SIDE)
LSR LIMIT SWITCH (RICHMOND SIDE)
BFR BRIDGE FLASHING RELAY
SP SPARE

NOTES:

1. ALL TERMINAL BLOCK TO BE 600V WITH MOUNTING STRIP & END ANCHORS. SEE EACH DIAGRAM FOR QUANTITIES.
2. ALL CONDUIT TO BE SCH. 80 PVC HEAVY WALL.

PROJECT DESIGN ENGINEER	BY	DATE
PLANS DESIGN - DETAILED	SKW	2-27-95
CHECKED		4-26-95
REVISIONS		
FIELD CHANGES		

BRUNING A4-132 45710-1

NEILL and GUNTER
Consulting and Design Engineers
P.O. Box 1959
PORTLAND, ME 04104

STATE OF MAINE
DEPARTMENT OF TRANSPORTATION

MAINE KENNEBEC BRIDGE
OVER KENNEBEC RIVER
BETWEEN THE TOWNS OF
RICHMOND SAGADAHOC CO. &
DRESDEN LINCOLN CO.

JUNCTION BOX
INTERCONNECTION DIAGRAMS

SHEET 11 OF 21 AUGUSTA, MAINE

NGI JOB NO. 2093C NGI DWG. NO. C-506

100-156

F.H.W.A. REG. NO.	STATE	PROJECT NUMBER	SHEET NO	TOTAL SHEETS
1	MAINE	BH-0164(3)	12	21

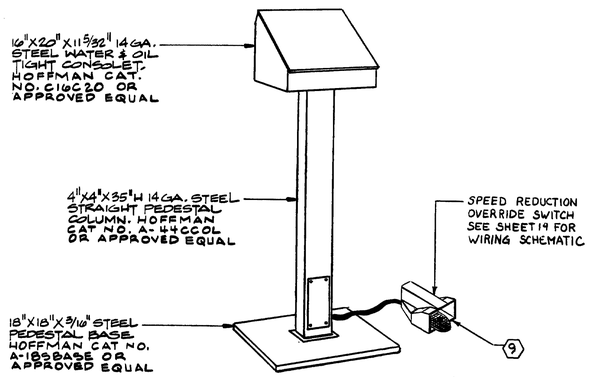

CONTROL HOUSE CONSOLET
N.T.S.

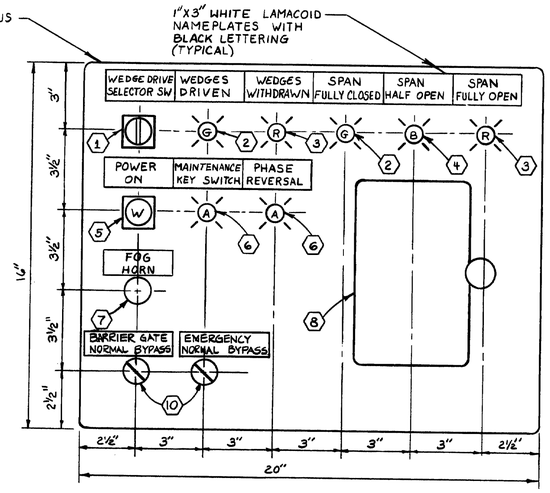

CONSOLET LAYOUT

PARTS LIST		
PART DESIGNATN	FURNISHED BY	DESCRIPTION
1	PANEL FABRI-CATOR	3 POSITION SELECTOR SWITCH, STANDARD LEVER MAINTAINED POSITION WITH DRIVE-OFF WITHDRAW NAMEPLATE.
2		PILOT LIGHT TRANSFORMER TYPE-120V WITH GREEN CAP.
3		PILOT LIGHT TRANSFORMER TYPE-120V WITH RED CAP.
4		PILOT LIGHT TRANSFORMER TYPE-120V WITH BLUE CAP.
5		ILLUMINATED 3 POSITION 120V TRANS. TYPE PUSH-PULL UNITS W/WHITE CAP-MOMENTARY POSITION W/PULL FOR POWER AND PUSH TO KILL POWER NAMEPLATE
6		PILOT LIGHT TRANSFORMER TYPE 120V WITH AMBER CAP.
7		MOMENTARY CONTACT PUSHBUTTON WITH BLACK FLUSH HEAD.
8		6 CIRCUIT, MILL-DUTY MASTER SWITCH, BALL AND ROD HANDLE TYPE WITH OFF POSITION LATCH. SURFACE MOUNTED
9		HEAVY DUTY FOOT SWITCH WITH PEDAL GUARD.
10		2 POSITION SELECTOR SWITCH STANDARD LEVER WITH SPRING LOADED PLASTIC COVER/MAINTAIN POSITION WITH NORMAL-BYPASS NAMEPLATE

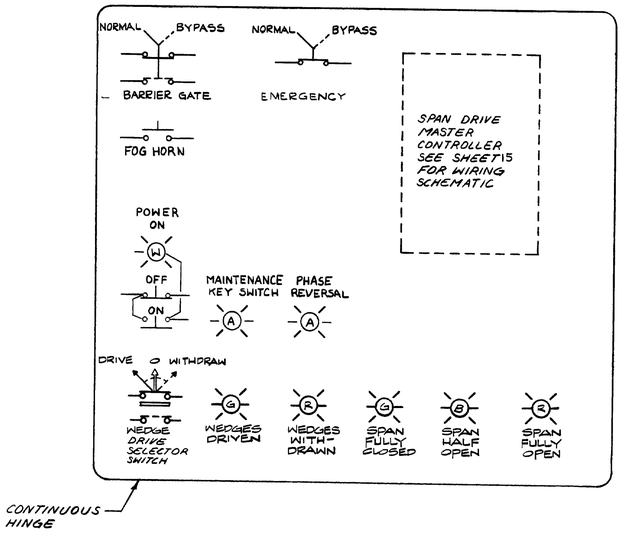

REAR VIEW WIRING DIAGRAM
N.T.S.

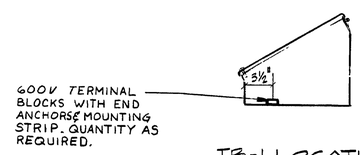

TB-1 LOCATION DETAIL

PROJECT DESIGN ENGINEER		BY	DATE
PLANS	DESIGN-DETAILED	RAN	4-18-85
	CHECKED	RAN	4-26-85
	REVISIONS		
	FIELD CHANGES		

BRUNING 44-132 45710-1

NG
NEILL and GUNTER
Consulting and Design Engineers
P. O. Box 1959
PORTLAND, ME 04104

STATE OF MAINE
DEPARTMENT OF TRANSPORTATION

MAINE KENNEBEC BRIDGE
OVER KENNEBEC RIVER
BETWEEN THE TOWNS OF
RICHMOND SAGADAHOC CO. &
DRESDEN LINCOLN CO.
CONTROL HOUSE CONSOLET
LAYOUT & DETAILS

SHEET 12 OF 21 AUGUSTA, MAINE

100-157

NGI JOB NO. 20930 NGI DWG NO C-507

F.H.W.A. REG. NO.	STATE	PROJECT NUMBER	SHEET NO	TOTAL SHEETS
1	MAINE	BM-0164(3)	13	21

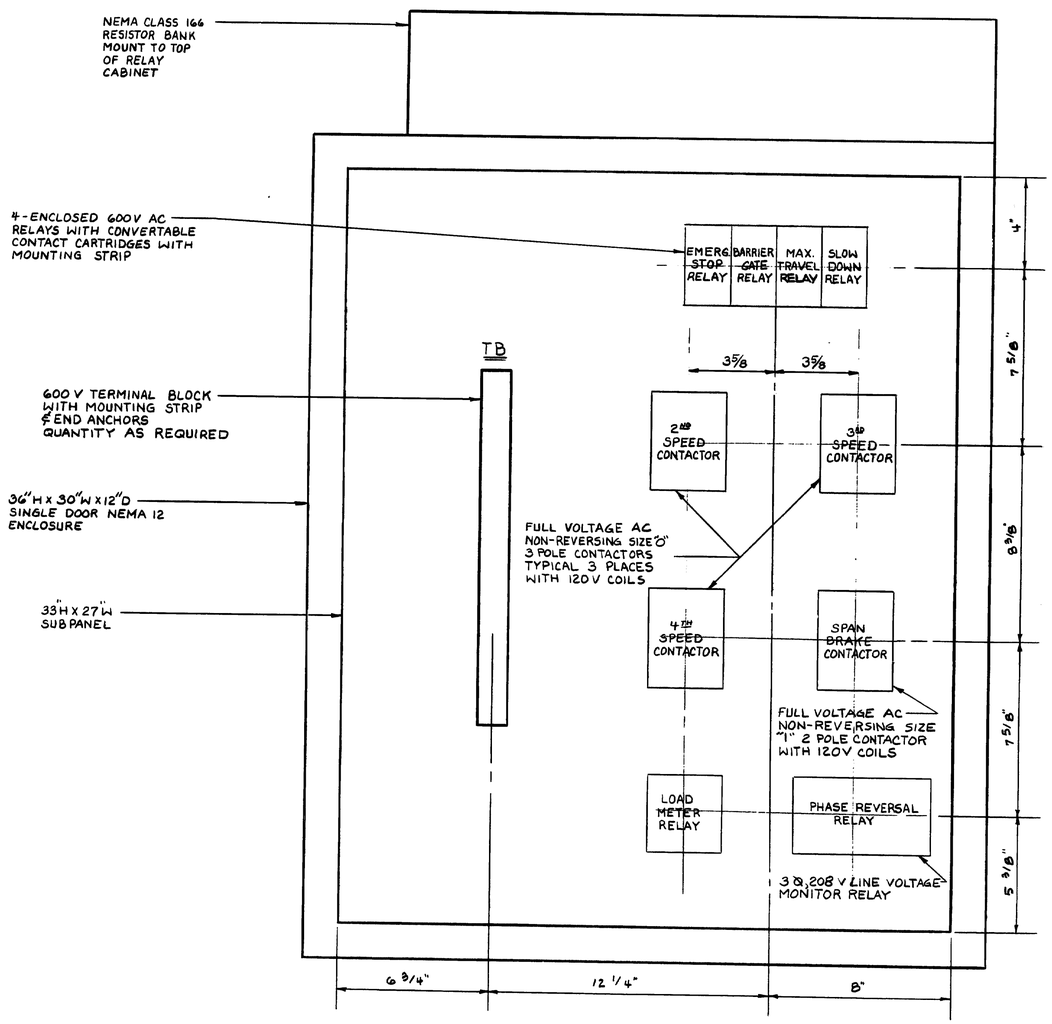

RELAY PANEL LAYOUT

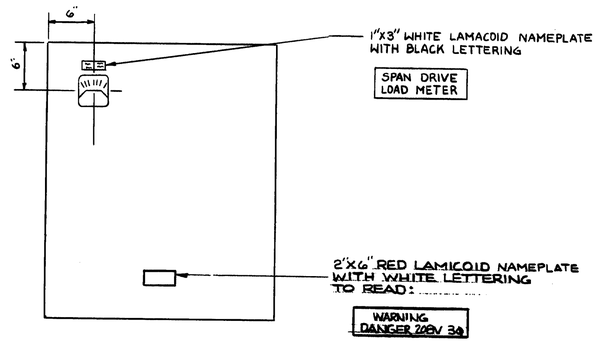

RELAY CABINET
FRONT VIEW

PROJECT DESIGN ENGINEER	BY	DATE
PLANS DESIGN-DETAILED	FTA	4-18-95
CHECKED		4-25-95
REVISIONS		
FIELD CHANGES		

BRUNING 44-132-4571D-1

NEILL and GUNTER
Consulting and Design Engineers
P. O. Box 1959
PORTLAND, ME 04104

STATE OF MAINE
DEPARTMENT OF TRANSPORTATION

MAINE KENNEBEC BRIDGE
OVER KENNEBEC RIVER
BETWEEN THE TOWNS OF
RICHMOND SAGADAHOC CO. &
DRESDEN LINCOLN CO.
RELAY CABINET LAYOUT

SHEET 13 OF 21 AUGUSTA, MAINE

100-158

NGI JOB NO. 20930 NGI DWG NO. C-508

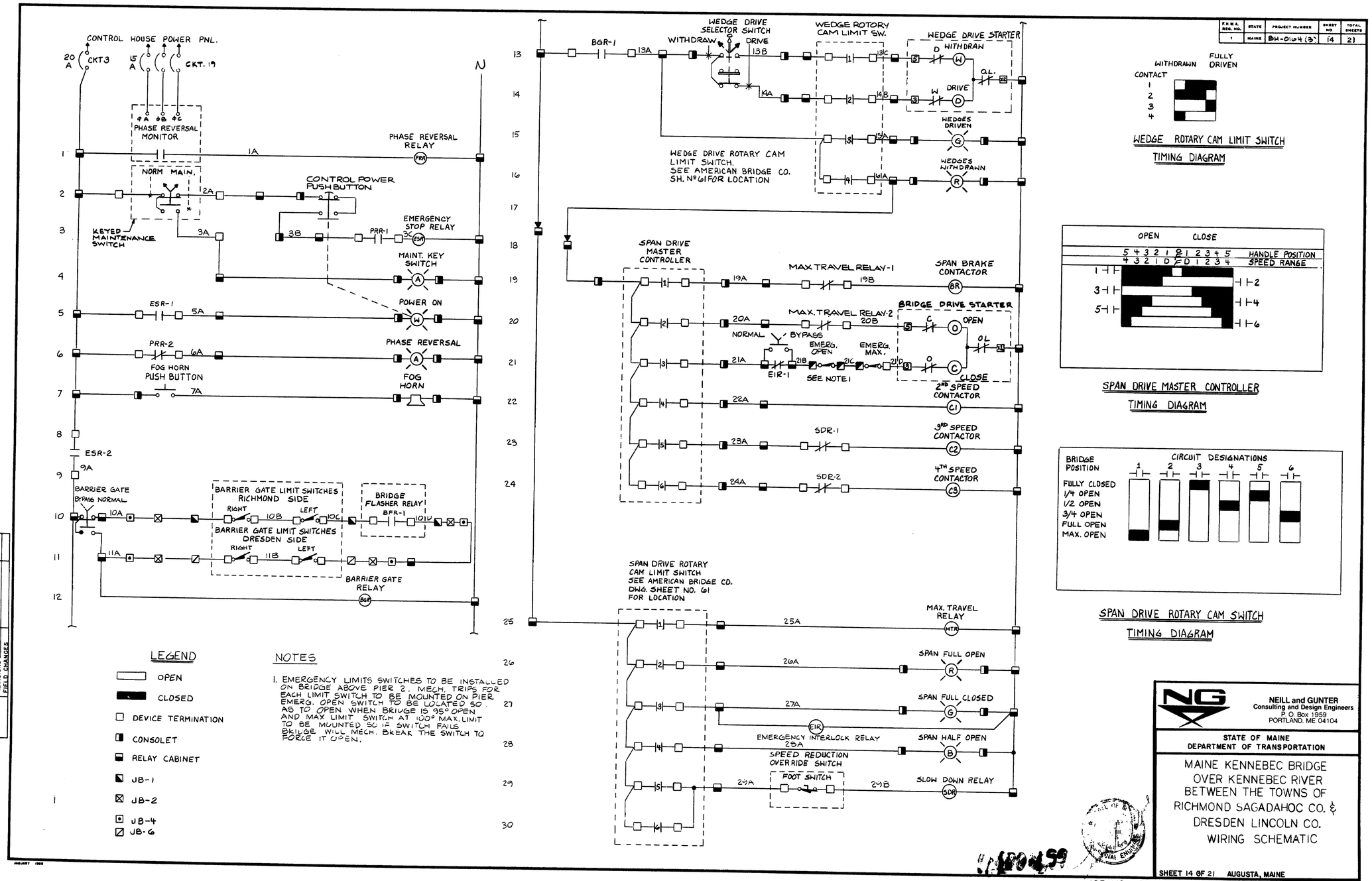

WEDGE ROTARY CAM LIMIT SWITCH
TIMING DIAGRAM

SPAN DRIVE MASTER CONTROLLER
TIMING DIAGRAM

SPAN DRIVE ROTARY CAM SWITCH
TIMING DIAGRAM

LEGEND

- OPEN
- CLOSED
- DEVICE TERMINATION
- CONSOLET
- RELAY CABINET
- JB-1
- JB-2
- JB-4
- JB-6

NOTES

1. EMERGENCY LIMITS SWITCHES TO BE INSTALLED ON BRIDGE ABOVE PIER 2. MECH. TRIPS FOR EACH LIMIT SWITCH TO BE MOUNTED ON PIER EMERG. OPEN SWITCH TO BE LOCATED SO AS TO OPEN WHEN BRIDGE IS 95° OPEN AND MAX LIMIT SWITCH AT 100° MAX. LIMIT TO BE MOUNTED SO IF SWITCH FAILS BRIDGE WILL MECH. BREAK THE SWITCH TO FORCE IT OPEN.

F.H.W.A. REG. NO.	STATE	PROJECT NUMBER	SHEET NO.	TOTAL SHEETS
1	MAINE	BH-0164 (3)	14	21

PROJECT DESIGN ENGINEER — PLANS
DESIGN - DETAILED — BY — DATE
CHECKED — FTR — 4-18-85
REVISIONS — 4-25-85
FIELD CHANGES

NEILL and GUNTER
Consulting and Design Engineers
P. O. Box 1959
PORTLAND, ME 04104

STATE OF MAINE
DEPARTMENT OF TRANSPORTATION

MAINE KENNEBEC BRIDGE
OVER KENNEBEC RIVER
BETWEEN THE TOWNS OF
RICHMOND SAGADAHOC CO. &
DRESDEN LINCOLN CO.
WIRING SCHEMATIC

SHEET 14 OF 21 AUGUSTA, MAINE

JOB NO. 20930 NGI DWG NO. C-509

F.H.W.A. REG. NO.	STATE	PROJECT NUMBER	SHEET NO	TOTAL SHEETS
1	MAINE	BH-0164 (3)	15	21

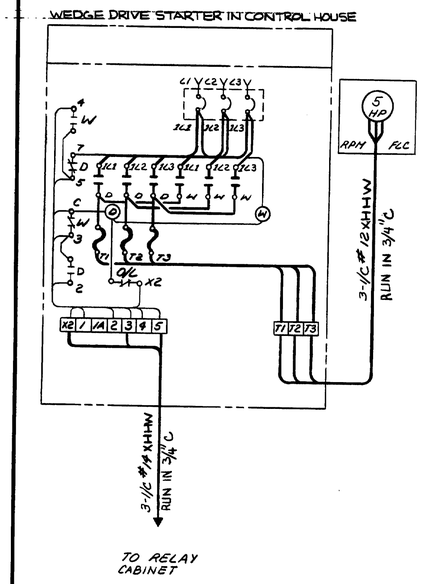

WEDGE DRIVE MOTOR

WIRING DIAGRAM

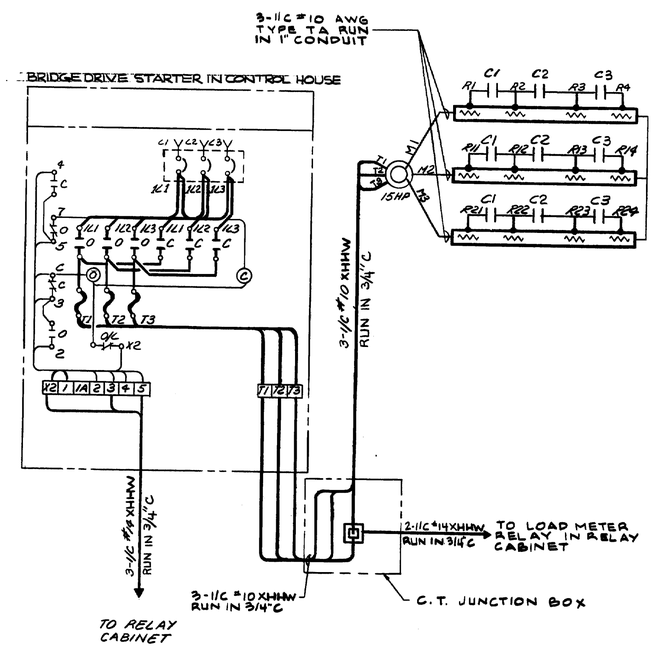

BRIDGE DRIVE MOTOR

WIRING DIAGRAM

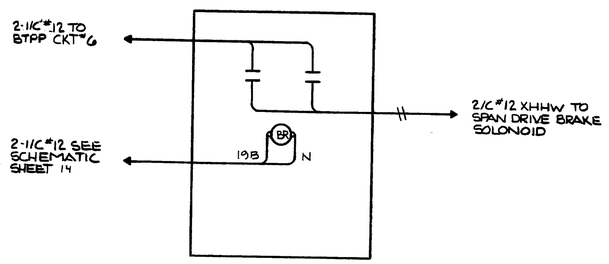

BRAKE CONTACTOR

WIRING DIAGRAM

N.T.S.

PROJECT DESIGN ENGINEER	BY	DATE
PLANS DESIGN - DETAILED		4-18-96
CHECKED		4-25-96
REVISIONS		
FIELD CHANGES		

BRUNING 44-132 45710-1

NEILL and GUNTER
Consulting and Design Engineers
P. O. Box 1959
PORTLAND, ME 04104

STATE OF MAINE
DEPARTMENT OF TRANSPORTATION

MAINE KENNEBEC BRIDGE
OVER KENNEBEC RIVER
BETWEEN THE TOWNS OF
RICHMOND SAGADAHOC CO. &
DRESDEN LINCOLN CO.

WEDGE & BRIDGE DRIVE
MOTOR WIRING DIAGRAMS

SHEET 15 OF 21 AUGUSTA, MAINE

JOB NO. 20930 NGI DWG. NO. C-510

F.H.W.A. REG. NO.	STATE	PROJECT NUMBER	SHEET NO	TOTAL SHEETS
1	MAINE	BH-0164(3)	16	21

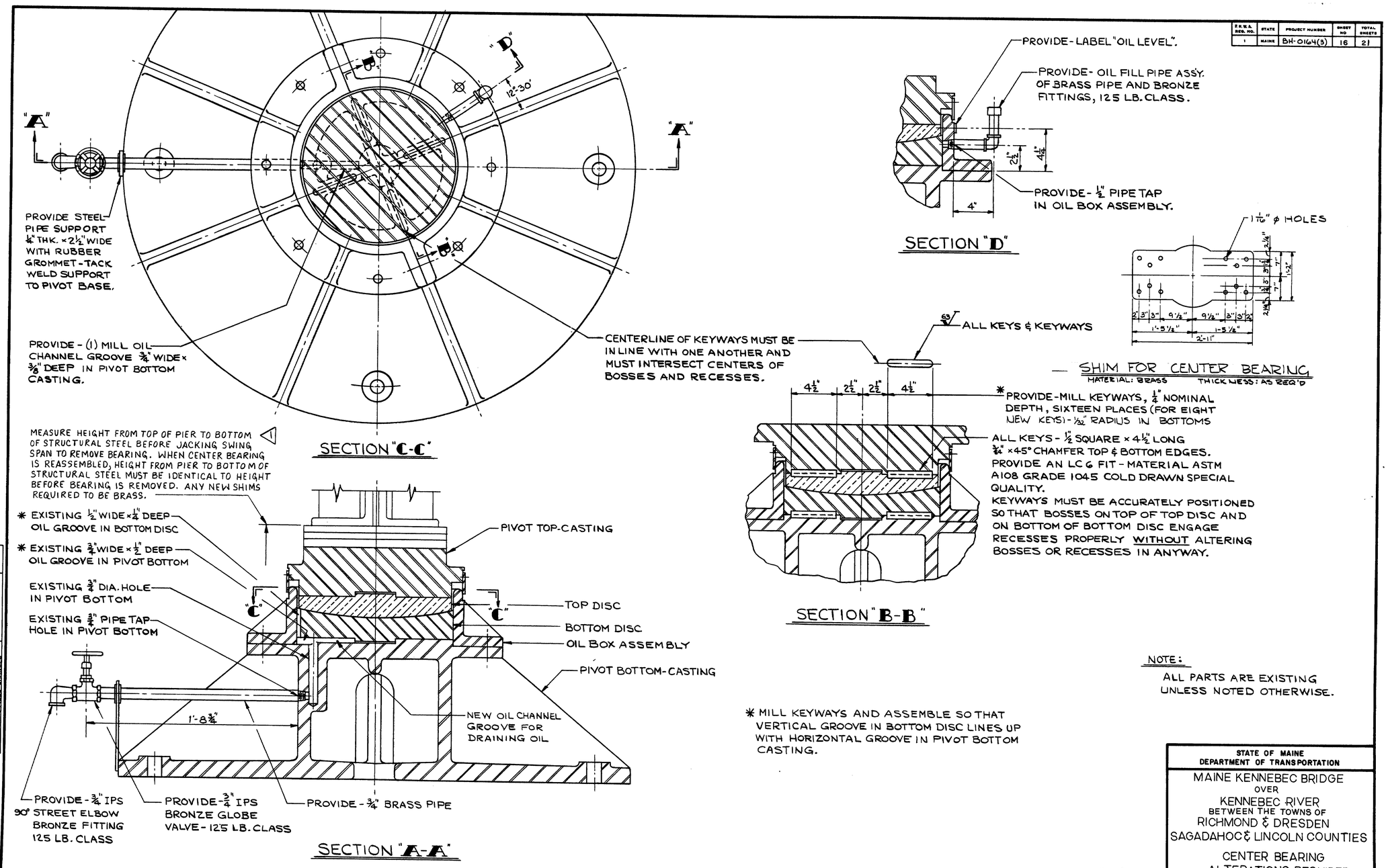

NOTE:
ALL PARTS ARE EXISTING UNLESS NOTED OTHERWISE.

* MILL KEYWAYS AND ASSEMBLE SO THAT VERTICAL GROOVE IN BOTTOM DISC LINES UP WITH HORIZONTAL GROOVE IN PIVOT BOTTOM CASTING.

PROJECT DESIGN ENGINEER		BY	DATE
PLANS	DESIGN - DETAILED	MCS	MAR. '85
	CHECKED	MCS	Apr. '85
	REVISIONS	MCS	9-14-87
	FIELD CHANGES		

STATE OF MAINE
DEPARTMENT OF TRANSPORTATION

MAINE KENNEBEC BRIDGE
OVER
KENNEBEC RIVER
BETWEEN THE TOWNS OF
RICHMOND & DRESDEN
SAGADAHOC & LINCOLN COUNTIES

CENTER BEARING
ALTERATIONS REQUIRED

SHEET 16 OF 21 AUGUSTA, MAINE

100-161

NGI JOB NO 20930

BRUNING 44-132 45710-1

F.H.W.A. REG. NO.	STATE	PROJECT NUMBER	SHEET NO	TOTAL SHEETS
1	MAINE	BH-0164(3)	17	21

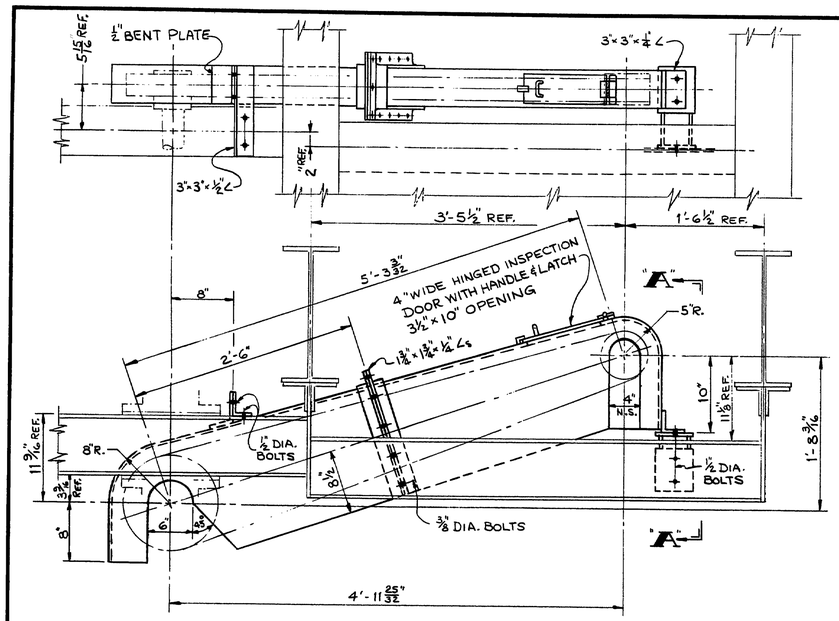

SILENT CHAIN COVER-SPAN DRIVE
1-REQUIRED SEE NOTES Nos. 1 & 2

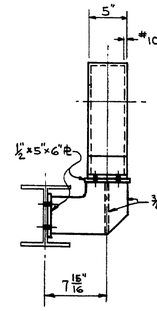

SECTION "A-A"

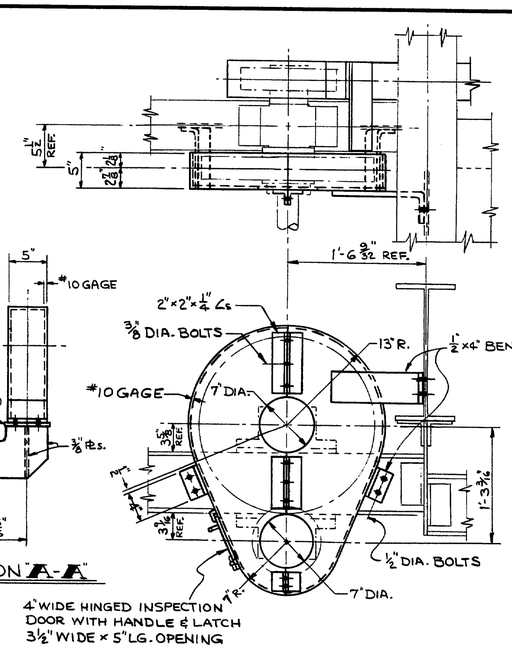

GEAR COVER P_3 G_3-SPAN DRIVE
1-REQUIRED SEE NOTE No. 1

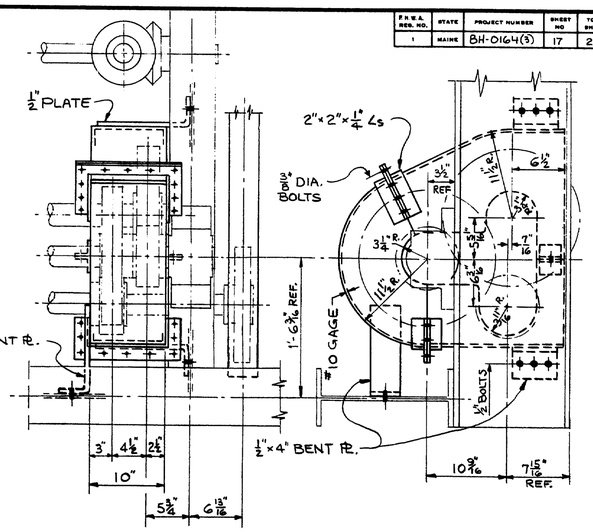

GEAR COVER P_2 G_2 & P_3 G_3-WEDGE DRIVE
1-REQUIRED SEE NOTE No. 1

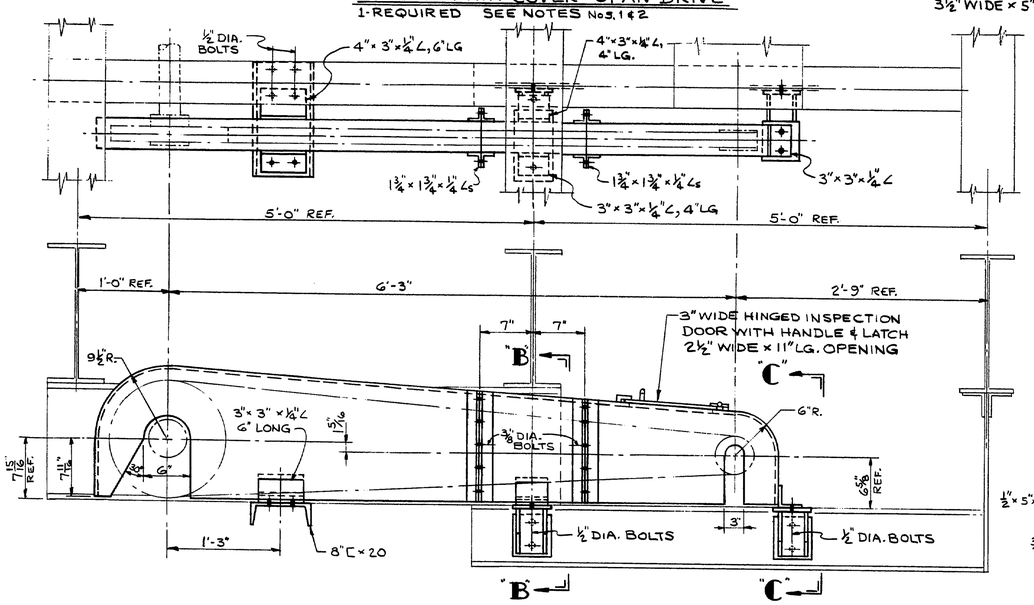

SILENT CHAIN COVER-WEDGE DRIVE
1-REQUIRED SEE NOTES Nos. 1 & 2

GEAR COVER P_3 G_3-SPAN DRIVE
1-REQUIRED SEE NOTE No. 1

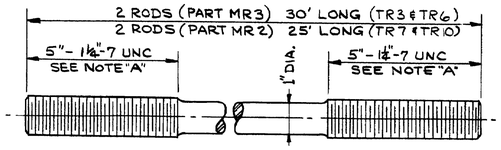

WEDGE DRIVE TENSION RODS
MATERIAL ASTM A668 CLASS E
NOTE "A"- CONTRACTOR TO VERIFY ALL DIMENSIONS & HAND OF THREADS REQUIRED AT EACH END OF EACH ROD.

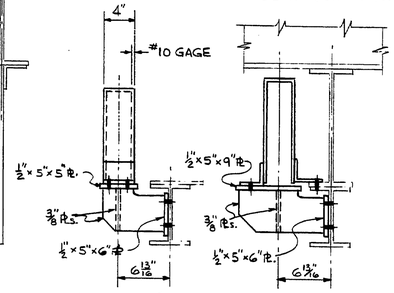

SECTION "B-B" SECTION "C-C"

4- AFTER THE PARTS OF THE WEDGE DRIVE SYSTEM HAVE BEEN REWORKED, ALL COMPONENTS, INCLUDING SLEEVE NUTS, SHALL BE DISASSEMBLED, CLEANED, AND REASSEMBLED. PAYMENT FOR THIS WORK SHALL BE INCIDENTAL TO ITEM 200.40 OPERATING MACHINERY.

NOTES:

1- GEAR AND CHAIN COVERS TO BE MADE FROM ASTM A635 HOT ROLLED SHEET AND ASTM A36 SHAPES AND PLATES. ALL BOLTS TO BE ASTM A325 TYPE 3, NUTS TO BE ASTM A563 GRADE C3 HEAVY HEX.

2- REMOVE SLACK IN TWO CHAIN DRIVES BEFORE MOUNTING CHAIN GUARDS. PROVIDE NEW MASTER LINKS AND/OR OFFSET LINKS, AS NECESSARY. SPAN DRIVE CHAIN IS 1" PITCH SILENT CHAIN. WEDGE DRIVE CHAIN IS ¾" PITCH SILENT CHAIN.

3. THE CONTRACTOR SHALL REPLACE ALL THE TENSION ROD SUPPORT GUIDE ROLLERS W/ NEW ROLLERS. SHOP DWG'S AND DETAILS OF EXISTING ROLLERS ARE NOT AVAILABLE. CONTRACTOR TO DETERMINE IN FIELD. THIS WORK SHALL BE DONE ON A FORCE ACCOUNT BASIS IN ACCORDANCE W/ SECTION 109.04 OF THE STANDARD SPECIFICATIONS.

PROJECT MAINE ENGINEER	BY	DATE
PLANS DESIGN - DETAILED	MCS	MAR. '86
CHECKED	J.J.M.	MAR. '86
REVISIONS	MCS	Apr. '86
FIELD CHANGES		

STATE OF MAINE
DEPARTMENT OF TRANSPORTATION

MAINE KENNEBEC BRIDGE
OVER
KENNEBEC RIVER
BETWEEN THE TOWNS OF
RICHMOND & DRESDEN
SAGADAHOC & LINCOLN COUNTIES

MACHINERY COVERS
& TENSION RODS

SHEET 17 OF 21 AUGUSTA, MAINE

100-162

NGI JOB NO 20930

BRUNING 44-132 45710-1

F.H.W.A. REG. NO.	STATE	PROJECT NUMBER	SHEET NO	TOTAL SHEETS
1	MAINE	BH-0164(3)	18	21

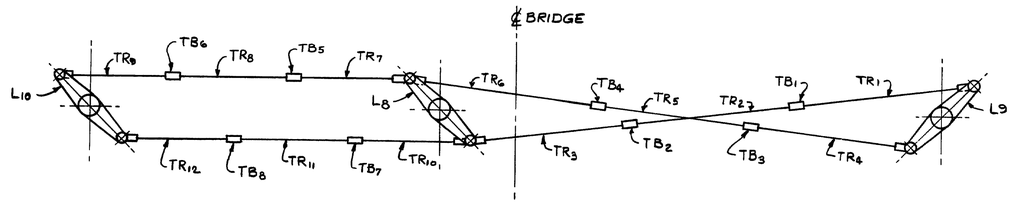

TENSION ROD SCHEMATIC
REPLACE TENSION RODS TR3, TR6, TR7 & TR10

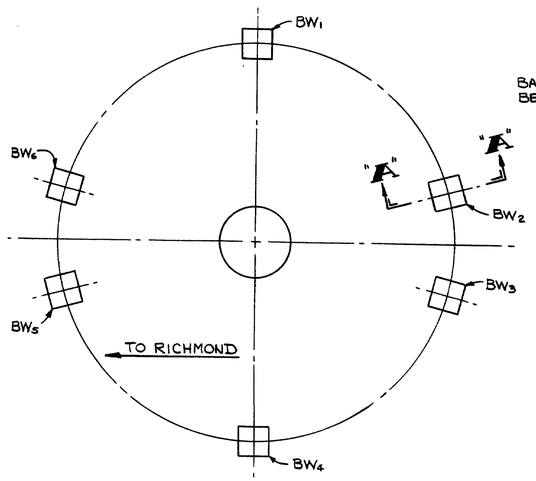

BALANCE WHEEL SCHEMATIC
ADJUST SHIMS FOR BALANCE WHEELS BW2, BW3 & BW5

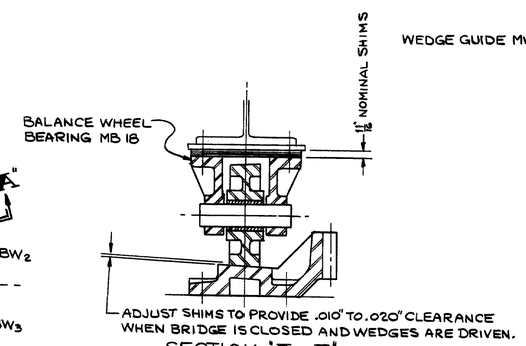

SECTION "A-A"
TYP. BALANCE WHEEL

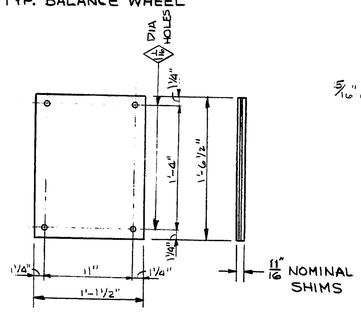

BALANCE WHEEL SHIM
3 SETS-REQUIRED, MATERIAL: BRASS 1

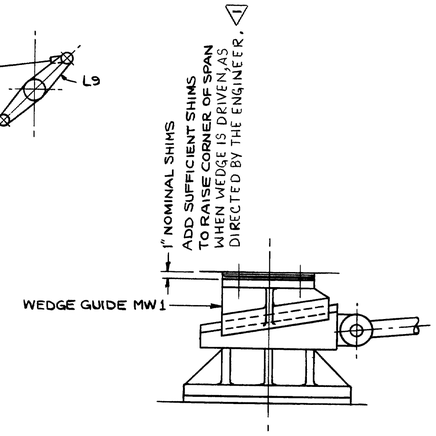

END WEDGE
NORTHEAST CORNER

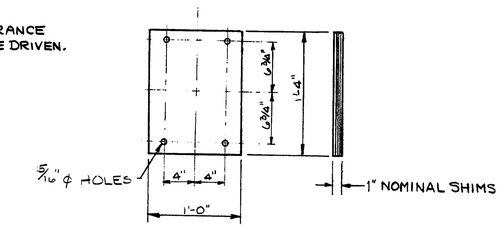

END WEDGE GUIDE SHIM
1 SET-REQUIRED, MATERIAL: BRASS 1

PROJECT DESIGN ENGINEER		BY	DATE
PLANS	DESIGN-DETAILED	MCS	APRIL '85
	CHECKED	MCS	Apr. '85
	REVISIONS	MCS	9-14-87
	FIELD CHANGES		

STATE OF MAINE
DEPARTMENT OF TRANSPORTATION

MAINE KENNEBEC BRIDGE
OVER
KENNEBEC RIVER
BETWEEN THE TOWNS OF
RICHMOND & DRESDEN
SAGADAHOC & LINCOLN COUNTIES

MISC. INFORMATION

SHEET 18 OF 21 AUGUSTA, MAINE

100-163

NGI JOB NO 20930