STATE OF MAINE
DEPARTMENT OF TRANSPORTATION

FORT KENT
AROOSTOOK

BR-1004(210)X

FORT KENT CUSTOMS FACILITY, ROUTE 1 IMPROVEMENTS & INTERNATIONAL BRIDGE APPROACH
PROJECT LENGTH 0.112 MILES

TRAFFIC DATA

Current (2011) AADT	2010
Future (2023) AADT	2250
DHV - % of AADT	9
Design Hour Volume	203
% Heavy Trucks (AADT)	7
% Heavy Trucks (DHV)	5
Directional Distribution (DHV)	51%
18 kip Equivalent P 2.0	136
18 kip Equivalent P 2.5	130
Design Speed (mph)	25

MATERIALS

Concrete (Unless noted otherwise)	Class "A"
Concrete (Curbs, Sidewalks & Transition Barriers)	Class "LP"
Reinforcing Steel	ASTM A615/A615M, Grade 60
Structural Steel:	
All Material (except as noted)	ASTM A709/A709M, Grade 50W
High Strength Bolts	ASTM A325, Type 3

BASIC DESIGN STRESSES

Concrete:	
Class A	f 'c = 4,350 psi
Class LP	f 'c = 5,075 psi
Reinforcing Steel	f y = 60,000 psi
Structural Steel:	
ASTM A 709/A 709M, Grade 50W	F y = 50,000 psi
ASTM A 709/A 709M, Grade 36	F y = 36,000 psi
ASTM A 325	F μ = 120,000 psi

UTILITIES

Time Warner Cable
Maine Public Service Co.
Fairpoint Communications
Fort Kent Water & Wastewater District

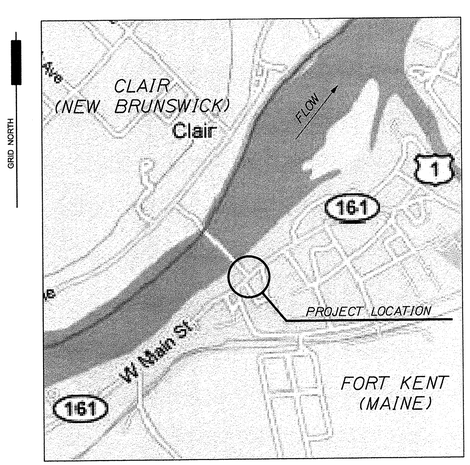

LOCATION MAP

LIST OF DRAWINGS

Title Sheet	1
Typical Sections	2
Not Applicable	3
General Notes	4
Service Plan	5
Proposed Service Plan	5a
Existing Service Plan	5b
Special Details	6
Retaining Wall Elevations	7
Borehole Logs	8
Maintenance of Traffic (Stages 1 through 6)	9 - 14
General Plan	15
Enlarged Site Plan	16
Canopy Foundation Plan and Details	17
Standard Booth Foundation Plans, Sections and Details	18
High / Low Booth Foundation Plans, Sections and Details	19
Crash Barriers Plans, Sections and Details	20
RPM Foundations Plans, Sections and Details	21
POV and Cargo RPM Stand Details	21a
Island Concrete Plans	22
Standard and High / Low Booth Plans	23
Standard Booth Elevations	24
Standard Booth Sections	25
High / Low Booth Elevations	26 - 27
High / Low Booth Sections	28
High / Low and Standard Booth Details	29
Booth and Canopy Mech. Plans and Notes	30
Booth Mechanical Sections and Details	31
Electrical Legend, Notes and Wiring Diagrams	32
Route 1 / West Main Street and Building Conduit Plan	33
Electrical Elevation Details	34
Lightning Protection Plan and Details	35
Security Conduit and Device Plan	36
Security Device Elevations	37
Electrical Equipment Plan and Details	38
Electrical Conduit Plan and Details	39
Equipment and Panel Schedules	40
Electrical Conduit and Cable Schedules	41
Electrical Trench Sections and Details	42
RPM Electrical Notes	43
RPM Conduit Elevations	44
RPM Wiring Diagrams	45
RPM Grounding Detail and Traffic Light Detail	46
Booth Electrical Plans and Elevations	47
Demolition	48
Canopy Elevations	49 - 50
Canopy Sections	51
Canopy Structural Steel Roof Framing Plan and Metal Deck Schedule	52
Canopy Structural Steel Ceiling Framing Plan	53
Canopy Structural Details	54
Canopy Structural Framing Sections	55
Canopy Roof Plan	56
Canopy Reflected Ceiling Plan	57
Canopy Details	58 - 63
Concrete Apron Finish Grade Plan and Sections	64
Concrete Apron Cross Sections	65 - 66
Bridge Approach Cross Sections	67 - 68
Geometric Curbing and Striping Plans	69
Apartment and Restaurant Site Drainage	70
Landscape Site Plan	71
Highway Plans	72
Highway Geometry	73
Bridge Approach Profile	74
Route 1 / West Main Street Profile	75
Route 1 / West Main Street Cross Sections	76 - 78
Berm Build-Up Profile	79
Existing Canopy Steel Reinforcing Details	80
Fort Kent Right of Way Map	81

STATE OF MAINE
DEPARTMENT OF TRANSPORTATION

APPROVED — DATE 7/23/13
COMMISSIONER:
CHIEF ENGINEER: 7-22-13

STATE OF MAINE — BRIAN L. DORCAS — No. 9483 — LICENSED PROFESSIONAL ENGINEER

SIGNATURE
P.E. NUMBER 13-07-12
DATE

PROJECT INFORMATION

PROGRAM	
PROJECT MANAGER	B.L. DORCAS
DESIGNER	
CONSULTANT	
PROJECT RESIDENT	
CONTRACTOR	
PROJECT COMPLETION DATE	

PIN 10042.10

BR-1004(210)X

FORT KENT
INTERNATIONAL BRIDGE APPROACH

TITLE SHEET

SHEET NUMBER
1
OF 81

Filename: $file$ Division: $wkgroup$ Username: $user$ Date:$date$

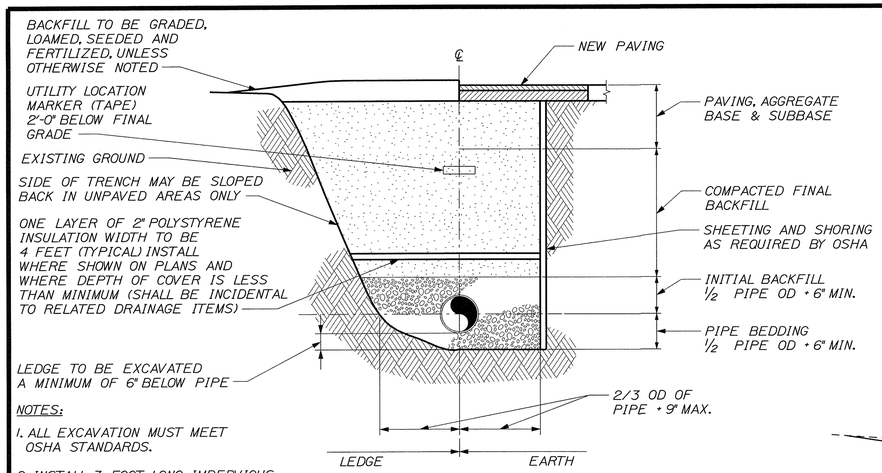

NOTES:

1. ALL EXCAVATION MUST MEET OSHA STANDARDS.
2. INSTALL 3 FOOT LONG IMPERVIOUS MATERIAL DAM IN BEDDING/INITIAL BACKFILL MATERIAL EVERY 100' TO PREVENT TRENCH GROUND WATER FROM BEING CHANNELED ALONG BEDDING/INITIAL BACKFILL
3. SEE SPECIFICATIONS FOR BEDDING AND BACKFILL REQUIREMENTS

TYPICAL TRENCHING DETAIL
SCALE ½" = 1'-0"

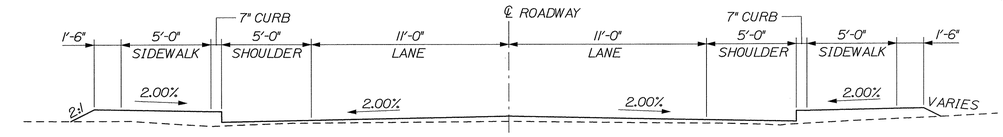

ROUTE 1 / WEST MAIN STREET
TYPICAL SECTION
STA. 200+60 to 201+05

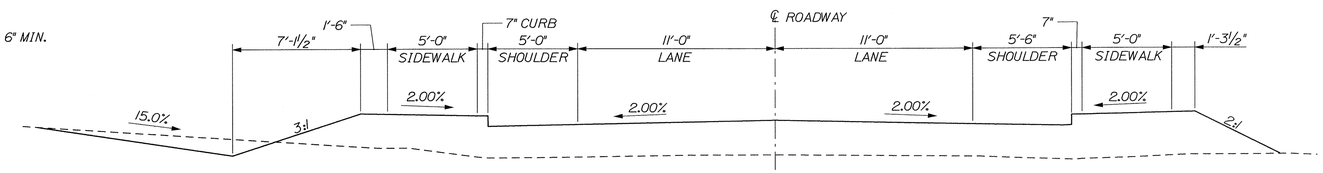

ROUTE 1 / WEST MAIN STREET
TYPICAL SECTION
STA. 201+80 to 202+70

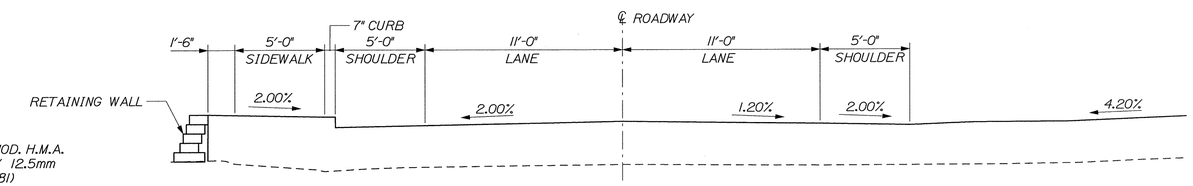

ROUTE 1 / WEST MAIN STREET
TYPICAL SECTION
STA. 203+10 to 204+00

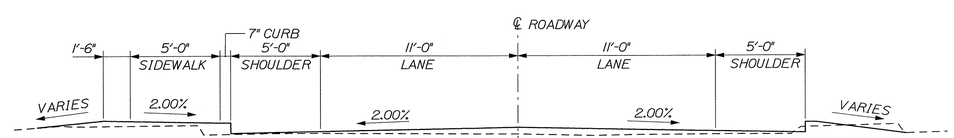

ROUTE 1 / WEST MAIN STREET
TYPICAL SECTION
STA. 204+35 to 205+00

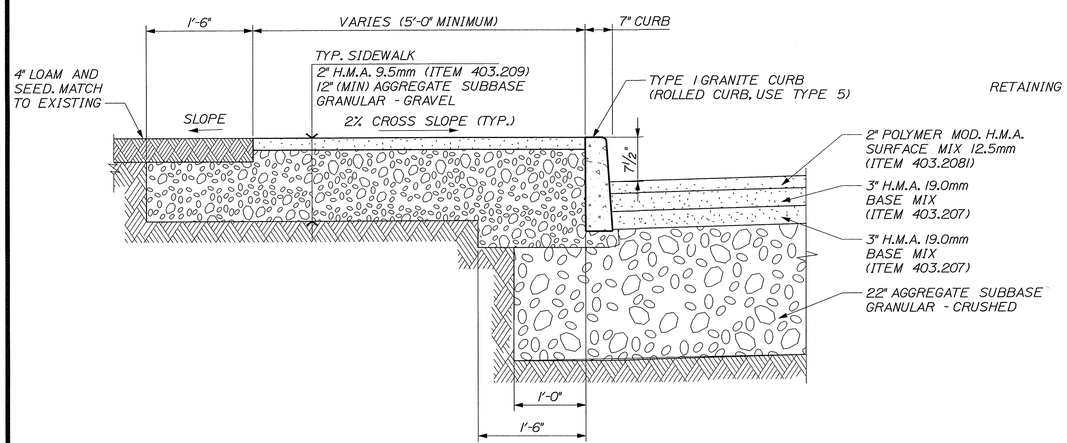

TYPICAL SIDEWALK DETAIL
SCALE 1" = 1'-0"

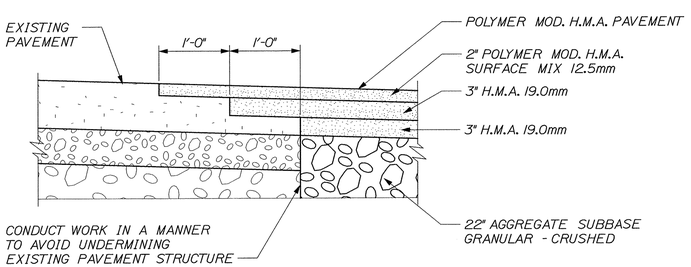

TYPICAL PAVEMENT MILLING DETAIL
SCALE 1" = 1'-0"

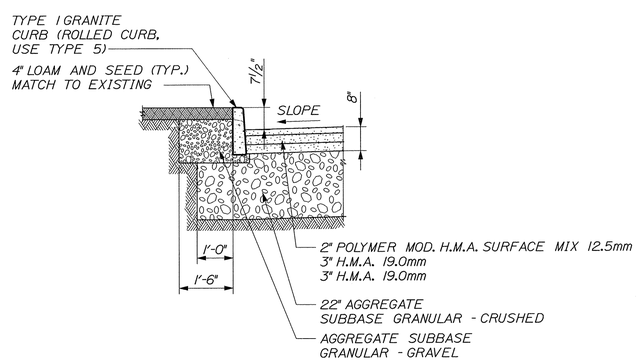

TYPICAL VERTICAL GRANITE CURB DETAIL
SCALE ½" = 1'-0"

NOTE:

SEE SHEET NUMBERS 76 - 78 FOR ADDITIONAL CROSS-SECTIONS

STATE OF MAINE
DEPARTMENT OF TRANSPORTATION

BR-1004(210)X

PIN 10042.10

BRIDGE NO. ____

BRIDGE PLANS

STATE OF MAINE · BRIAN L. DORCAS · No. 9463 · LICENSED PROFESSIONAL ENGINEER

SIGNATURE

P.E. NUMBER 13-07-19.
DATE

	BY	DATE
PROJ. MANAGER	B.L. DORCAS	
DESIGN-DETAILED	BCA	12.JUN.29
CHECKED-REVIEWED	AEC	12.JUN.29
DESIGNS-DETAILED3	GRF	
REVISIONS 1		
REVISIONS 2		
REVISIONS 3		
REVISIONS 4		
FIELD CHANGES		

INTERNATIONAL BRIDGE APPROACH
SAINT JOHN RIVER
FORT KENT AROOSTOOK

TYPICAL SECTIONS

SHEET NUMBER
2
OF 81

Filename: $file$ Division: $wkgroup$ Username: $user$ Date: $date$

GENERAL NOTES

1. THE UTILITIES INVOLVED IN FORT KENT CUSTOMS FACILITY, ROUTE 1 IMPROVEMENTS AND INTERNATIONAL BRIDGE APPROACH ARE AS FOLLOWS:
   - TIME WARNER CABLE
   - MAINE PUBLIC SERVICE CO.
   - FAIRPOINT COMMUNICATIONS
   - FORT KENT WATER & WASTEWATER DISTRICT

2. ALL UTILITY FACILITIES SHALL BE ADJUSTED BY THE RESPECTIVE UTILITIES UNLESS OTHERWISE NOTED.

3. ALL JOINTS BETWEEN EXISTING AND PROPOSED HOT BITUMINOUS PAVEMENT SHALL BE BUTTED. PAYMENT SHALL BE MADE UNDER ITEM 202.203 PAVEMENT BUTT JOINT.

4. CONSTRUCT BUTT JOINTS AT ALL PAVED DRIVES AND ENTRANCES.

5. GRIND TRANSITION TAPERS AT CATCH BASINS UNDER ITEM 202.203. PAVEMENT BUTT JOINTS, AS DIRECTED BY THE RESIDENT.

6. TRIM ALL TREE BRANCHES TO 20' ABOVE THE PAVEMENT AND 21' FROM CENTERLINE, AS WELL AS ANY BRANCHES DAMAGED BY THE CONTRACTOR DURING CONSTRUCTION. PAYMENT SHALL BE MADE UNDER THE APPROPRIATE RENTAL ITEMS.

7. ALL CLEARING SHALL BE CONSIDERED INCIDENTAL TO THE CONTRACT AND NO SEPARATE PAYMENT WILL BE MADE. THE ACTUAL LINES FOR CLEARING SHALL BE ESTABLISHED IN THE FIELD BY THE CONTRACTOR AS INDICATED ON THE PLANS AND APPROVED BY THE RESIDENT.

8. STUMPS HAVE BEEN ESTIMATED TO BE REMOVED UNDER ITEM 201.24 REMOVE STUMP.

9. WHERE DEEMED NECESSARY BY THE RESIDENT, UNSUITABLE MATERIAL SHALL BE REMOVED AND PLACED IN DESIGNATED AREAS OR DISPOSED OF. PAYMENT WILL BE MADE UNDER THE APPROPRIATE CONTRACT ITEMS.

10. THE CONTRACTOR SHALL PLAN AND CONDUCT THEIR WORK ACCORDINGLY SO THAT UPON FINAL COMPLETION OF THE PROJECT THERE IS NO DROP-OFF FROM THE EDGE OF SHOULDER PAVEMENT. ALL REMAINING OR DISTURBED MATERIAL ON SLOPES OR IN DITCHES ON THE PROJECT SHALL BE CAPABLE OF ATTAINING A GROWTH OF GRASS THAT IS ACCEPTABLE ACCORDING TO STANDARD SPECIFICATION 618.10. NO SEPARATE PAYMENT WILL BE MADE FOR THIS WORK.

11. DRIVEWAY FILL SIDE SLOPES SHALL BE THE SAME AS THE NON-GUARDRAIL FILL SLOPES UNLESS OTHERWISE NOTED ON THE PLANS.

12. ALL WASTE MATERIAL NOT USED ON THE PROJECT SHALL BE DISPOSED OF OFF THE PROJECT IN WASTE AREAS APPROVED BY THE RESIDENT.

13. GRANULAR BORROW USED TO BACKFILL MUCK EXCAVATION OR IN LOW WET AREAS TO 1' ABOVE WATER LEVEL OR OLD GROUND SHALL MEET REQUIREMENTS FOR GRANULAR BORROW UNDERWATER BACKFILL.

14. EXISTING INSLOPES STEEPER THAN 2:1 IN PROPOSED FILL AREAS SHALL BE BENCHED AS DIRECTED BY THE RESIDENT.

15. RESIDENTIAL PAVED ENTRANCES SHALL BE CONSTRUCTED WITH: 2" HOT MIX ASPHALT AND 12" AGGREGATE SUBBASE COURSE GRAVEL.

16. COMMERCIAL PAVED ENTRANCES SHALL BE CONSTRUCTED WITH: 3" HOT MIX ASPHALT AND 11" AGGREGATE SUBBASE COURSE GRAVEL.

17. ALL PAVED WALKS TO BE CONSTRUCTED WITH 12" AGGREGATE SUBBASE COURSE GRAVEL AND 2" HOT MIX ASPHALT UNLESS OTHERWISE NOTED IN THE PLANS OR DIRECTED BY THE RESIDENT.

18. PLACE 12" GRAVEL AND 2" HOT MIX ASPHALT AROUND CATCH BASINS IN GRASSED AREAS (3' OUTSIDE OF FRAME) AND PAINT WITH ACRYLIC LATEX COLOR FINISH - GREEN. PAYMENT SHALL BE UNDER THE APPLICABLE CONTRACT ITEMS.

19. ANY NECESSARY CLEANING OF EXISTING PAVEMENT PRIOR TO PAVING SHALL BE INCIDENTAL TO THE RELATED PAVING ITEMS.

20. THE FOLLOWING SHALL BE INCIDENTAL TO THE 603 ITEM(S):
   - ANY CUTTING OF EXISTING CULVERTS AND/OR CONNECTORS NECESSARY TO INSTALL NEW CULVERT REPLACEMENTS OR EXTENSIONS.
   - ALL PIPE EXCAVATION INCLUDING ANY CUTTING AND REMOVAL OF PAVEMENT.
   - ALL DITCHING AT PIPE ENDS.
   - FURNISHING, PLACING, GRADING, AND COMPACTING OF ANY NEW GRAVEL AND/OR FILL MATERIAL INCLUDING GRANULAR BORROW USED UNDER PIPES AND FOR TEMPORARY DETOURS TO MAINTAIN TRAFFIC DURING PIPE INSTALLATION (EXCAVATION IS ALSO INCIDENTAL).
   - GRANULAR BORROW UNDER THE PIPE SHALL MEET THE REQUIREMENTS FOR UNDERWATER BACKFILL.
   - ALL WORK NECESSARY TO CONNECT TO EXISTING PIPES AND DRAINAGE STRUCTURES.
   - FLOW LINES MAY BE CHANGED BY UP TO 1.5'.
   - ANY NECESSARY CLEARING OF BRUSH AND NON-PAY TREES AT CULVERT ENDS.

21. EXISTING CULVERTS AND CATCH BASINS WILL BE CLEANED AS DIRECTED BY THE RESIDENT UNDER THE APPROPRIATE PAY ITEMS.

22. NO EXISTING DRAINAGE SHALL BE ABANDONED, REMOVED OR PLUGGED WITHOUT PRIOR APPROVAL OF THE RESIDENT.

23. THE CULVERT SIZES SHOWN ON THE PLANS AND CROSS SECTIONS ARE FOR SMOOTH LINED PIPES.

24. ANY NECESSARY CUTTING OF EXISTING PIPES TO FIT IN AREAS OF PROPOSED CATCH BASINS WILL NOT BE PAID FOR SEPARATELY AND WILL BE CONSIDERED INCIDENTAL TO ITEM 604.

25. ANY NECESSARY CUTTING OF EXISTING CATCH BASINS TO ALLOW FOR PROPOSED PIPE CONNECTIONS WILL NOT BE PAID FOR SEPARATELY AND WILL BE CONSIDERED INCIDENTAL TO ITEM 603 OR 605.

26. AS DIRECTED BY THE RESIDENT, ALL EXISTING UNDERDRAIN OUTLETS SHALL BE LOCATED, CLEANED OUT AND DITCHED AS REQUIRED OR REPLACED AS NECESSARY. PAYMENT WILL BE MADE UNDER APPROPRIATE CONTRACT ITEMS.

27. ALL UNDERDRAIN NOT SHOWN ON THE CROSS SECTIONS WILL HAVE A FLOW LINE BELOW FINISH GRADE DIRECTLY ABOVE THE UNDERDRAIN AND UNDERDRAIN SAND BACKFILL PLACED TO AN ELEVATION EQUAL TO THE BOTTOM OF THE NEW GRAVEL LAYER. ALL UNDERDRAIN SHOWN ON THE CROSS SECTIONS WILL HAVE THE FLOW LINE SCALED FROM THE CROSS SECTIONS. ALL FLOW LINE ELEVATIONS ARE SUBJECT TO APPROVAL BY THE RESIDENT.

28. ALL CONNECTIONS FOR UNDERDRAIN (U.D.) TO ROADWAY CULVERTS OR CATCH BASINS WILL BE INCIDENTAL TO U.D. PIPE ITEMS.

29. A 3' X 3' SQUARE RIP RAP PAD SHALL BE CONSTRUCTED AT U.D. OUTLETS.

30. EXISTING ABANDONED WATER MAINS BROKEN BY THE CONTRACTOR DURING CONSTRUCTION SHALL HAVE THE ENDS PLUGGED WITH BRICK AND MORTAR. COST FOR ALL LABOR AND MATERIAL WILL BE CONSIDERED INCIDENTAL TO THE CONTRACT AND NO DIRECT PAYMENT WILL BE MADE.

31. GUARDRAIL END TREATMENTS SHALL BE INSTALLED CONCURRENTLY WITH THE PLACEMENT OF EACH SECTION OF BEAM GUARDRAIL.

32. GUARDRAIL WHICH IS REMOVED AND NOT REUSED ON THE PROJECT BECOMES PROPERTY OF THE STATE AND SHALL BE DELIVERED TO FORT KENT PUBLIC WORKS YARD, OR AS DIRECTED BY RESIDENT. REMOVAL, DELIVERY, DISMANTLING, AND STACKING SHALL BE INCIDENTAL TO THE GUARDRAIL ITEMS.

33. HOLES CREATED BY GUARDRAIL REMOVAL WILL BE FILLED AND COMPACTED WITH APPROVED MATERIALS AS DIRECTED BY THE RESIDENT. PAYMENT TO BE CONSIDERED INCIDENTAL TO THE GUARDRAIL ITEMS.

34. TWO REFLECTORIZED FLEXIBLE G.R. MARKERS (ITEM 606.353) WILL BE INSTALLED AT EACH GUARDRAIL END. A DELINEATOR POST (ITEM 606.35) WILL BE INSTALLED AT EACH UNDERDRAIN OUTLET.

35. CONNECTIONS FOR PROPOSED GUARDRAIL TO EXISTING GUARDRAIL WILL BE CONSIDERED INCIDENTAL TO ITEM 606.

36. ALL CATCH BASINS TYPE A PLACED ON CIRCULAR CURB TYPE 1 SHALL HAVE THE CURB INLET CUT THE SAME RADIUS AS ADJACENT CIRCULAR CURB. PAYMENT SHALL BE INCIDENTAL TO ITEM 604.

37. IN AREAS WHERE CURB TYPE 1 WILL BE RESET, THE EXISTING CURB SUITABLE FOR USE AS TERMINAL ENDS SHALL BE CUT IF NECESSARY AND UTILIZED AS SUCH AND PAID FOR UNDER ITEM 609.01.

38. BACKING UP CURB IS INCIDENTAL TO THE CURB ITEMS. IN AREAS WHERE NEW CURB IS DESIGNATED TO REPLACE EXISTING, THE REMOVAL OF THE OLD CURB SHALL BE INCIDENTAL TO THE NEW CURB.

39. LOAM HAS BEEN ESTIMATED FOR DISTURBED LAWN AREAS. ACTUAL PLACEMENT OF THE LOAM SHALL BE AS NOTED ON THE PLANS OR DESIGNATED BY THE RESIDENT.

40. UNLESS OTHERWISE NOTED SEEDING METHOD NO. 1 SHALL BE UTILIZED ON ALL LAWNS AND DEVELOPED AREAS; SEEDING METHOD NO. 2 SHALL BE UTILIZED ON ALL NON-GUARDRAIL SLOPES. SEEDING METHOD NO. 3 SHALL BE UTILIZED ON ALL GUARDRAIL FILL SLOPES. ON LONG NON-GUARDRAIL BACKSLOPES, SEEDING METHOD NO. 3 MAY BE USED INSTEAD OF METHOD NO. 2 IF NOTED OR DIRECTED BY THE RESIDENT.

41. LOAM SHALL BE PLACED TO A NOMINAL DEPTH OF 4 INCHES IN LAWN AREAS AND 2" IN ALL OTHER AREAS UNLESS OTHERWISE NOTED OR DIRECTED.

42. WHITE PAVEMENT/CURB MARKING (ITEM 627.733) SHALL BE APPLIED TO ALL ISLAND TAPERED ENDS.

43. ANY BASE PAVEMENT NOT SURFACED BEFORE WINTER WILL REQUIRE TEMPORARY PAVEMENT MARKINGS OF PAINT, BOTH YELLOW CENTERLINE AND WHITE EDGE LINES AND WILL BE CONSIDERED PART OF ITEM 627.76.

44. THE CONTRACTOR WILL BE RESPONSIBLE FOR MAINTAINING ALL EXISTING MAILBOXES TO ENSURE THAT THE MAIL WILL BE DELIVERABLE. NO SEPARATE PAYMENT WILL BE MADE FOR THIS WORK; IT SHALL BE CONSIDERED INCIDENTAL TO THE CONTRACT.

45. THE CONTRACTOR IS RESPONSIBLE FOR THE SIDE STAKING OF EXISTING CENTERLINE AS PER STANDARD SPECIFICATION 105.6.2. SIDE STAKES SHALL BE PLACED SAFELY OUTSIDE OF THE CONSTRUCTION LIMITS AND THE EXISTING CENTERLINE GRADES SHALL BE TRANSFERRED TO THESE STAKES. THESE STAKES AND GRADES WILL BE USED TO LAY OUT CENTERLINE. ALL LAYOUT, STAKES, AND GRADES WILL BE CHECKED AND MUST BE ACCEPTABLE TO THE RESIDENT.

46. ANY DAMAGE TO THE SLOPES CAUSED BY THE CONTRACTOR'S EQUIPMENT, PERSONNEL, OR OPERATION SHALL BE REPAIRED TO THE SATISFACTION OF THE RESIDENT. ALL WORK, EQUIPMENT, AND MATERIALS REQUIRED TO MAKE REPAIRS SHALL BE AT THE CONTRACTOR'S EXPENSE.

47. AREAS REQUIRING FILL ON THE PROJECT WILL COME FROM SUITABLE EXCAVATION FROM EXCAVATION AREAS.

48. ESTIMATED QUANTITIES FOR REQUIRED STRUCTURAL EARTH EXCAVATION, DRAINAGE AND MINOR STRUCTURES ARE INFORMATIONAL ONLY AND REPRESENT THE APPROXIMATE MINIMUM QUANTITY REQUIRED TO INSTALL DRAINAGE STRUCTURES. ADDITIONAL EXCAVATION FOR THE CONTRACTOR'S CONVENIENCE OR TO COMPLY WITH BACKSLOPING REQUIREMENTS WILL NOT BE PAID FOR DIRECTLY BUT WILL BE CONSIDERED INCIDENTAL TO THE RELATED DRAINAGE ITEMS.

49. NO SEPARATE PAYMENT FOR SUPERINTENDENT OR FOREMAN WILL BE MADE FOR THE SUPERVISION OF EQUIPMENT BEING PAID FOR UNDER THE EQUIPMENT RENTAL ITEMS.

50. "UNDETERMINED LOCATIONS" SHALL BE DETERMINED BY THE RESIDENT.

51. STATIONS REFERENCED ARE APPROXIMATE.

52. ALL WORK SHALL BE DONE IN ACCORDANCE WITH THE MAINE DEPARTMENT OF TRANSPORTATION'S BEST MANAGEMENT PRACTICES FOR EROSION CONTROL & SEDIMENT CONTROL, FEBRUARY 2008.

53. NO BURNING AND/OR SELLING OF MATERIAL ON SITE.

54. CONTRACTOR TO ENSURE ALL SITE RUN-OFF IS TAKEN AWAY FROM SITE DURING AND AFTER CONSTRUCTION. NO PONDING WATER.

55. BACKFILLING AROUND CATCH BASINS SHALL BE COMPLETED IN ACCORDANCE WITH ITEM 604 AND 605 OF THE GENERAL SPECIFICATIONS. CONNECTIONS TO EXISTING PIPE SHALL BE MADE WATERTIGHT. WHEN NOT CONNECTING TO A BELL OR SPIGOT, COUPLING BAND MAY BE USED AT THE DISCRESSION OF THE RESIDENT. COUPLING BAND AND JOINT MATERIAL WILL NOT BE PAID FOR SEPARATELY BUT SHALL BE CONSIDERED INCLUDED IN THE UNIT BID PRICE FOR THE TYPE OF PIPE BEING USED OR RE-LAID.

56. ALL ABANDONED PIPE TO BE FILLED WITH FLOWABLE FILL AS PER ITEM 502.

GEOTECHNICAL NOTES

1. GEOTECHNICAL INFORMATION FURNISHED OR REFERED TO IN THIS PLAN SET IS FOR THE BIDDER'S AND CONTRACTOR'S USE. NO ASSURANCE IS GIVEN THAT THE INFORMATION OR INTERPRETATIONS WILL BE REPRESENTATIVE OF ACTUAL SUBSURFACE CONDITIONS AT TIME OF CONSTRUCTION. THE DEPARTMENT SHALL NOT BE RESPONSIBLE FOR THE BIDDER'S OR CONTRACTOR'S INTERPRETATIONS OF, OR CONCLUSIONS DRAWN FROM, THE FRACTUAL AND INTERPRETIVE SUBSURFACE INFORMATION COLLECTED AT DISCRETE LOCATIONS. DATA PROVIDED MAY NOT BE REPRESENTATIVE OF SUBSURFACE CONDITIONS BETWEEN BORING LOCATIONS.

2. EXISTING PAVEMENT SHALL NOT BE USED AS COLD-IN-PLACE RECLAIM SUBBASE AGGREGATE.

STATE OF MAINE
DEPARTMENT OF TRANSPORTATION

BR-1004(210)X

PIN 10042.10

BRIDGE PLANS

BRIDGE NO. _____

STATE OF MAINE
BRIAN L. DORCAS
No.9463
LICENSED
PROFESSIONAL ENGINEER

		BY	DATE
PROJ. MANAGER	B.L. DORCAS		
DESIGN-DETAILED	BCA	STWD	12.JUN.29
CHECKED-REVIEWED	GRF	RWS2	12.JUN.29
DESIGN2-DETAILED2			
DESIGN3-DETAILED3			
REVISIONS 1			
REVISIONS 2			
REVISIONS 3			
REVISIONS 4			
FIELD CHANGES			

SIGNATURE

P.E. NUMBER

13-07-12
DATE

INTERNATIONAL BRIDGE APPROACH
SAINT JOHN RIVER
FORT KENT AROOSTOOK

GENERAL NOTES

SHEET NUMBER
4
OF 81

Filename: $file$ Division: $wkgroup$ Username: $user$ Date:$date$

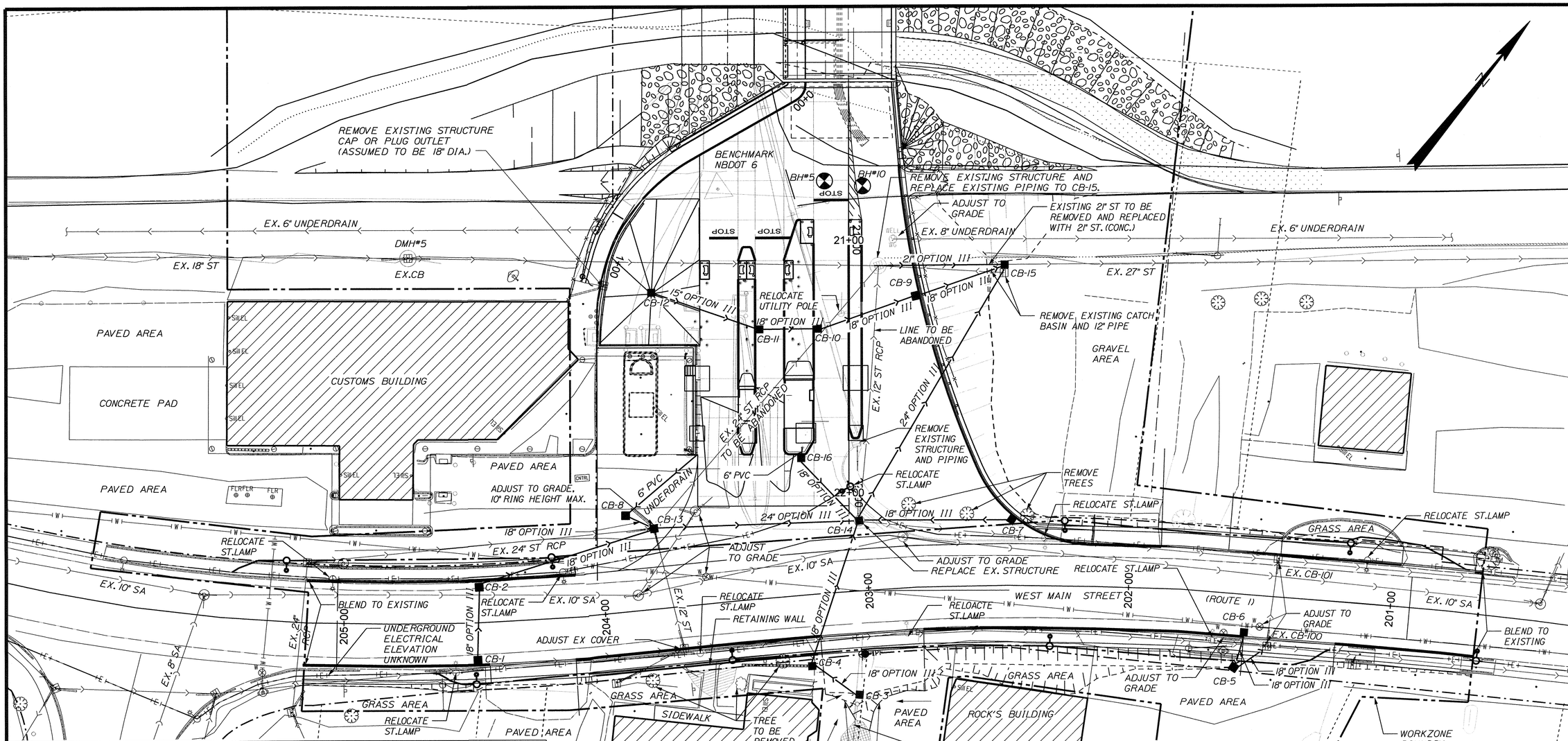

STRUCTURE	TYPE	NORTHING (Y)	EASTING (X)	TOP COVER (Z)	INV. IN (FROM)	INV. OUT (TO)
CB-1	AI-C	1367008.750	1770134.487	516.96	N/A	512.10 (CB-2)
CB-2	AI-C	1367031.930	1770114.096	516.97	511.80 (CB-1)	511.60 (CB-13)
CB-3	F5-C	1367097.063	1770250.844	514.87	N/A	510.80 (CB-4)
CB-4	F5-C	1367093.182	1770230.026	515.37	509.80 (CB-3)	509.60 (CB-14)
CB-5	F5-C	1367200.097	1770350.111	513.70	508.85 (CB-6)	508.80 (EX.CB-100)
CB-6	AI-C	1367211.492	1770345.026	514.48	N/A	508.50 (CB-5)
CB-7	AI-C	1367187.065	1770249.091	516.94	N/A	509.81 (CB-14)
CB-8	CI-C	1367088.503	1770138.523	515.81	N/A	511.95 (CB-13)
CB-9	AI-C	1367226.627	1770166.008	523.07	515.50 (CB-10)	515.40 (CB-15)
CB-10	AI-C	1367189.651	1770144.362	523.10	516.00 (CB-11)	515.90 (CB-9)
CB-11	AI-C	1367174.580	1770127.880	522.42	516.30 (CB-12)	516.20 (CB-10)
CB-12	CI-C	1367158.465	1770088.863	521.15	N/A	516.60 (CB-11)
CB-13	CI-C	1367092.112	1770149.906	-	510.40 (CB-2) 511.80 (CB-8) 509.70 (EX.CB) 508.30 (EX.CB)	508.20 (CB-14)
CB-14	CI-C	1367146.523	1770206.235	518.12	509.00 (CB-4) 509.30 (CB-7) 511.00 (CB-16) 507.45 (CB-13)	507.25 (CB-15)
CB-15	CI-C	1367256.446	1770182.089	511.26	508.20 (CB-9) 505.55 (EX.) 505.60 (CB-14)	505.50 -
CB-16	AI-C	1367150.721	1770172.740	519.17	513.20 (DRAIN)	513.00 (CB-14)

NOTE:

REFER TO DWG. 69 FOR CURBING

NOTE:

HORIZONTAL

* COORDINATES SHOWN ARE A STRAIGHT CONVERSION FROM METRIC TO IMPERIAL

POINT	COORDINATE SYSTEM	X-COORDINATE	Y-COORDINATE
NBDOT 6	NB ATS77	140818.933	885330.298
	ME 2000-M	539522.941	416725.698
	* ME 2000-IMP STRAIGHT CONVERSION	1770088.389	1367210.295
	ME 2000-IMP CALCULATED	1770084.848	1367207.561
NBDOT 8	NB ATS77	140920.578	885420.416
	ME 2000-M	539621.448	416819.183
	* ME 2000-IMP STRAIGHT CONVERSION	1770411.575	1367517.005
	ME 2000-IMP CALCULATED	1770408.034	1367514.271

THERE IS ALSO A ROTATION IN THE GRID FROM NB TO MAINE = + 1.9415 DEGREES OR FROM MAINE TO NB = - 1.9415 DEGREES

VERTICAL

ELEVATIONS SHOWN ARE BASED ON NB GEODETIC CONVERTED TO IMPERIAL. FOR CONVERSION SEE BELOW

FROM NB GEODETIC TO MAINE = -86 mm
FROM MAINE TO NB GEODETIC = +86 mm

LEGEND

PROPOSED	EXISTING	
		CURB
■		CATCH BASIN
		STORM WATER PIPE (ST)
		EXISTING WATER
		UNDERGROUND ELECTRICAL
		SANITARY SEWER (SA)
		SANITARY MANHOLE
		FIRE HYDRANT
		WATER VALVE
		MONITORING WELL
		UTILITY POLE
		STREET LAMP POST
		TREE
		SIGN
		FENCE
		LOW AREA
		HEDGE
		RIGHT OF WAY
		WORKZONE BOUNDARY

STATE OF MAINE
DEPARTMENT OF TRANSPORTATION

BR-1004(210)X

PIN 10042.10

BRIDGE PLANS

BRIDGE NO. ____

STATE OF MAINE
BRIAN L. DORCAS
No.9463
PROFESSIONAL ENGINEER

P.E. NUMBER
13-07-12
DATE

	B.L. DORCAS	BY	DATE
PROJ. MANAGER			
DESIGN-DETAILED	BCA	STWD	12.JUN.29
CHECKED-REVIEWED	GRF	BCA	12.JUN.29
DESIGN2-DETAILED2			
DESIGN3-DETAILED3			
REVISIONS 1			
REVISIONS 2			
REVISIONS 3			
REVISIONS 4			
FIELD CHANGES			

SIGNATURE

INTERNATIONAL BRIDGE APPROACH
SAINT JOHN RIVER
FORT KENT AROOSTOOK

SERVICE PLAN

SHEET NUMBER
5
OF 81

Filename: $file$ Division: $wkgroup$ Username: $user$ Date:$date$

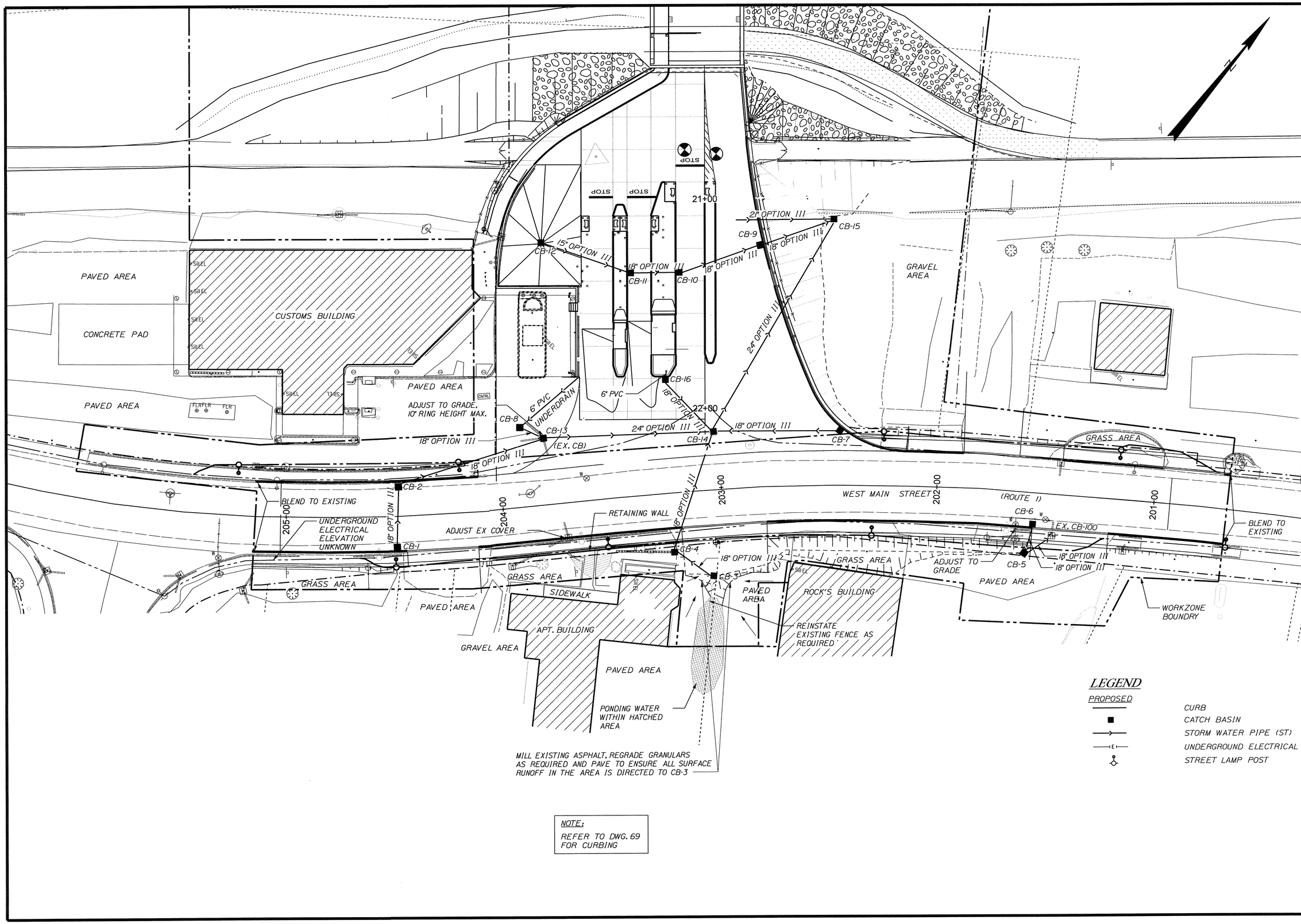

STATE OF MAINE
DEPARTMENT OF TRANSPORTATION

BR-1004(210)X

PIN 10042.10

BRIDGE PLANS

BRIDGE NO. ____

STATE OF MAINE
BRIAN L. DORCAS
No.9463
LICENSED
PROFESSIONAL ENGINEER

PROJ. MANAGER	B.L. DORCAS		
DESIGN-DETAILED	BCA	AEG	13.MAY.23
CHECKED-REVIEWED	GRF	BCA	13.MAY.23
DESIGN2-DETAILED2			
DESIGN3-DETAILED3			
REVISIONS 1			
REVISIONS 2			
REVISIONS 3			
REVISIONS 4			
FIELD CHANGES			

SIGNATURE

P.E. NUMBER

13-07-12
DATE

INTERNATIONAL BRIDGE APPROACH
SAINT JOHN RIVER
FORT KENT AROOSTOOK

PROPOSED SERVICE PLAN

SHEET NUMBER

5a

OF 81

Filename: $file$ Division: $wkgroup$ Username: $user$ Date:$date$

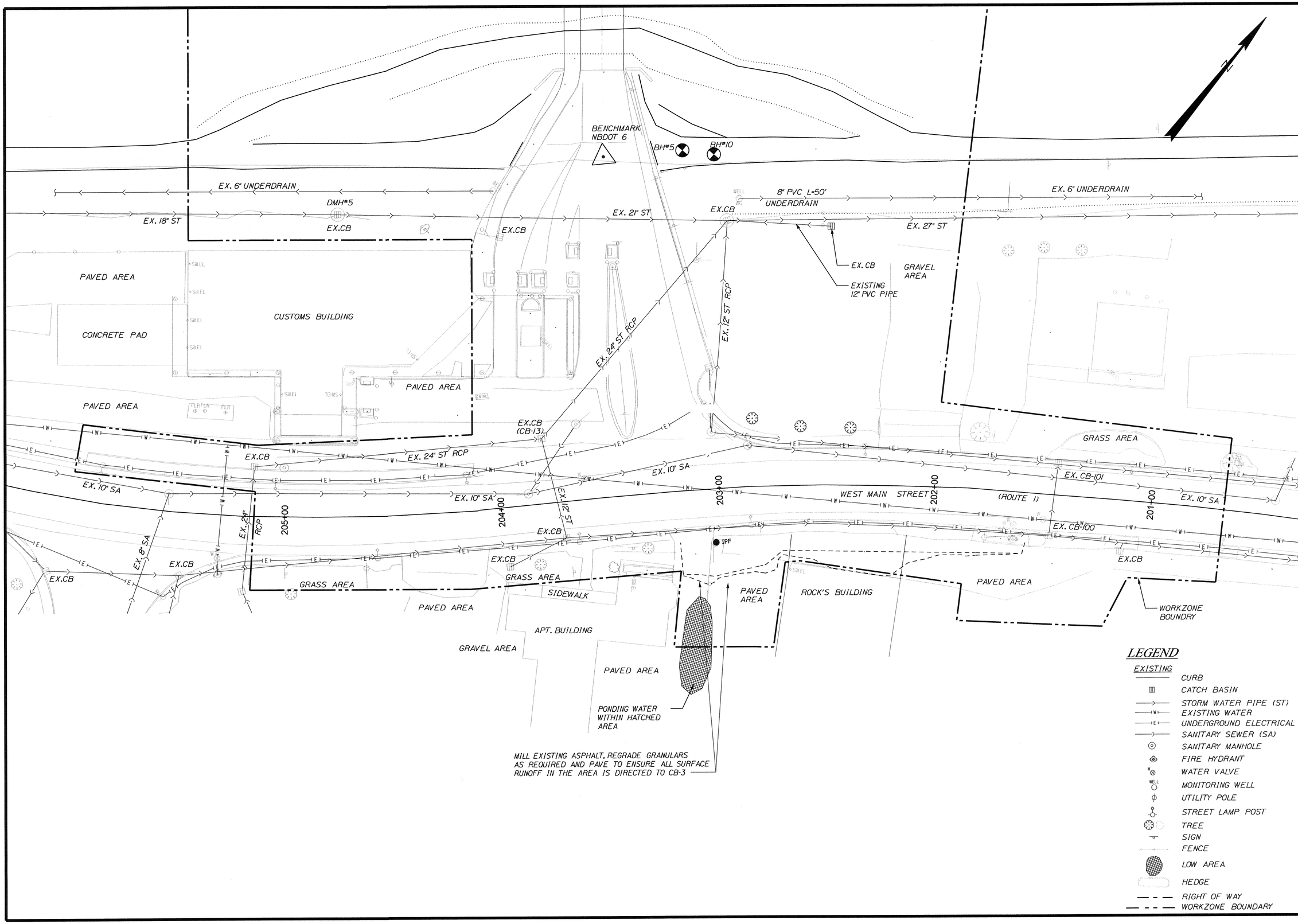

STATE OF MAINE
DEPARTMENT OF TRANSPORTATION

BR-1004(210)X

PIN
10042.10

BRIDGE PLANS

BRIDGE NO. ____

STATE OF MAINE
BRIAN L. DORCAS
No.9463
PROFESSIONAL ENGINEER

P.E. NUMBER
13-07-12
DATE

PROJ. MANAGER	B.L. DORCAS		
DESIGN-DETAILED	BCA	AEG	13.MAY.23
CHECKED-REVIEWED	GRF	BCA	13.MAY.23
DESIGN2-DETAILED2			
DESIGN3-DETAILED3			
REVISIONS 1			
REVISIONS 2			
REVISIONS 3			
REVISIONS 4			
FIELD CHANGES			

SIGNATURE

INTERNATIONAL BRIDGE APPROACH
SAINT JOHN RIVER
FORT KENT
AROOSTOOK

EXISTING SERVICE PLAN

SHEET NUMBER

5b

OF 81

Filename: $file$ Division: $wkgroup$ Username: $user$ Date:$date$

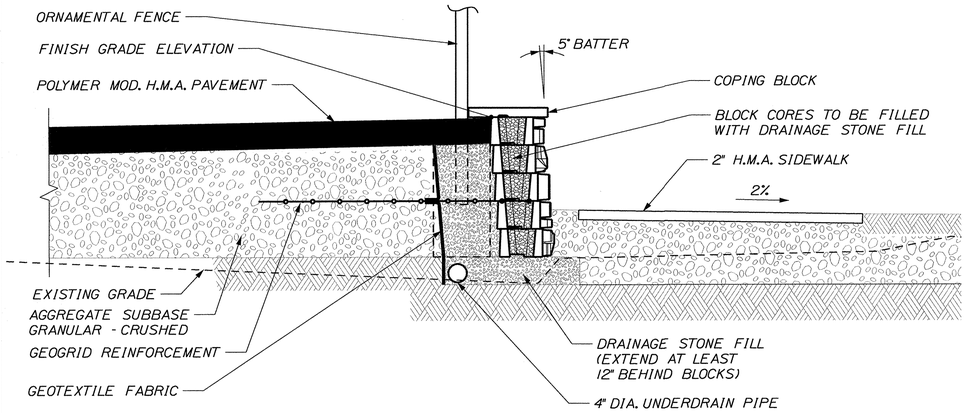

TYPICAL RETAINING WALL AND SIDEWALK SECTION

SCALE: 3/4" = 1'-0"

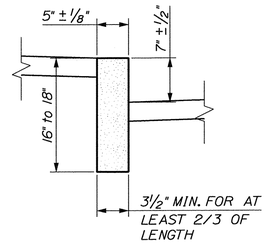

TYPICAL CURB DETAIL TYPE 1

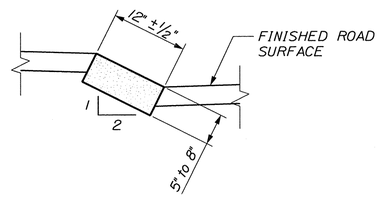

TYPICAL CURB DETAIL TYPE 5

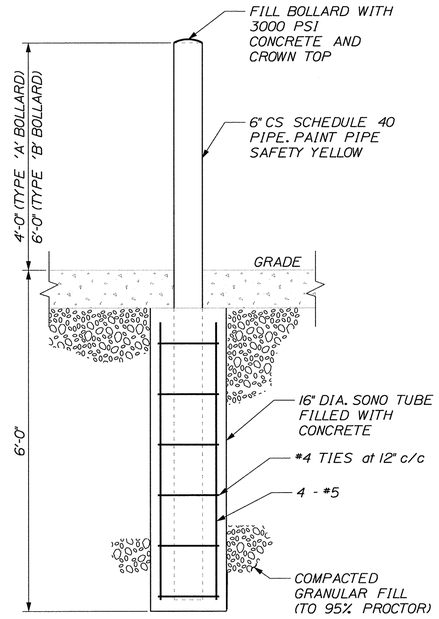

TYPE 'A' and TYPE 'B' BOLLARD

SCALE: 3/4" = 1'-0"

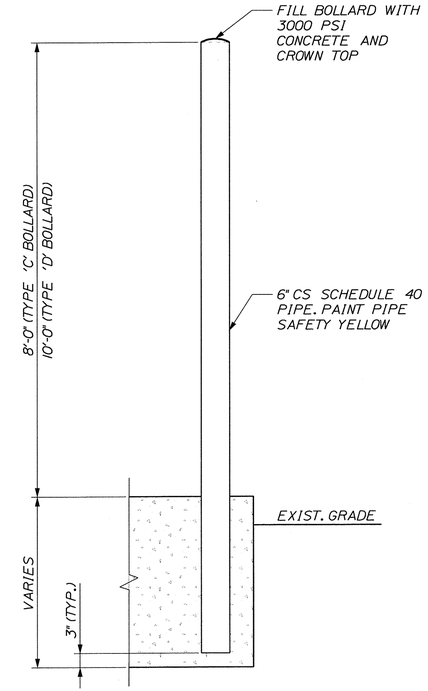

TYPE 'C' and TYPE 'D' BOLLARD

SCALE: 3/4" = 1'-0"

NOTE:

SEE DWG. 16 FOR LOCATION

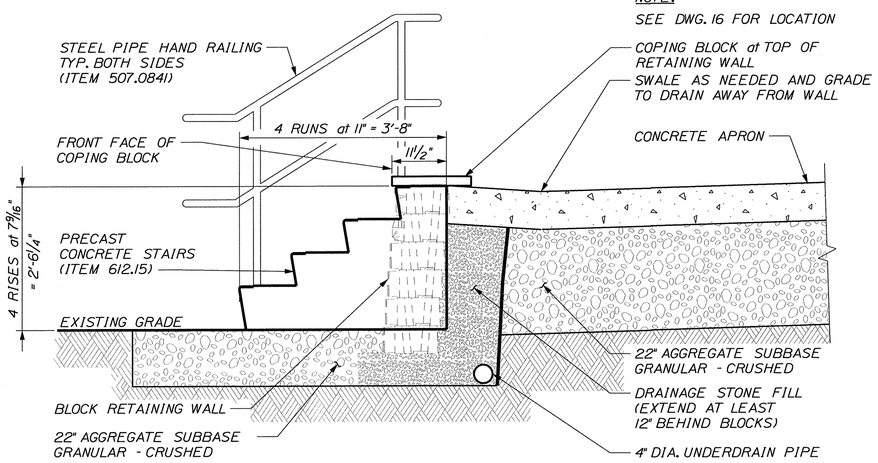

TYPICAL SECTION THROUGH STAIRS

SCALE: 3/4" = 1'-0"

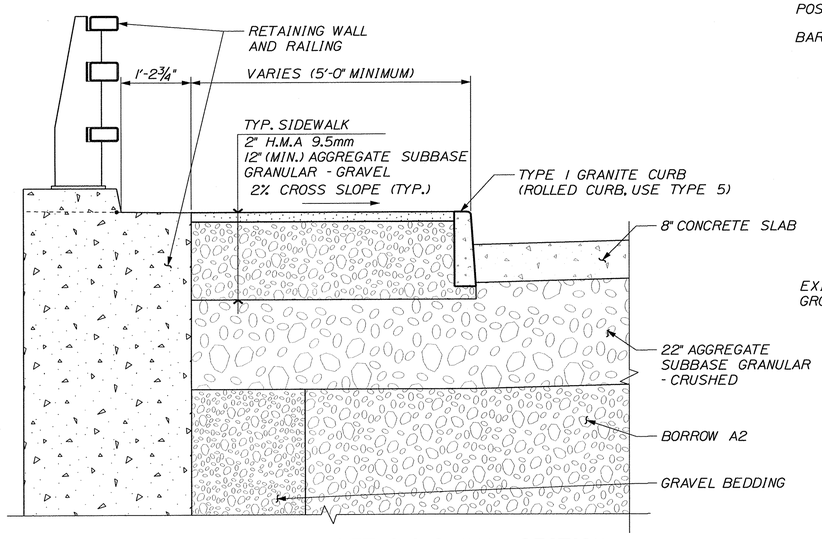

SIDEWALK / RETAINING WALL SECTION

SCALE: 1" = 1'-0"

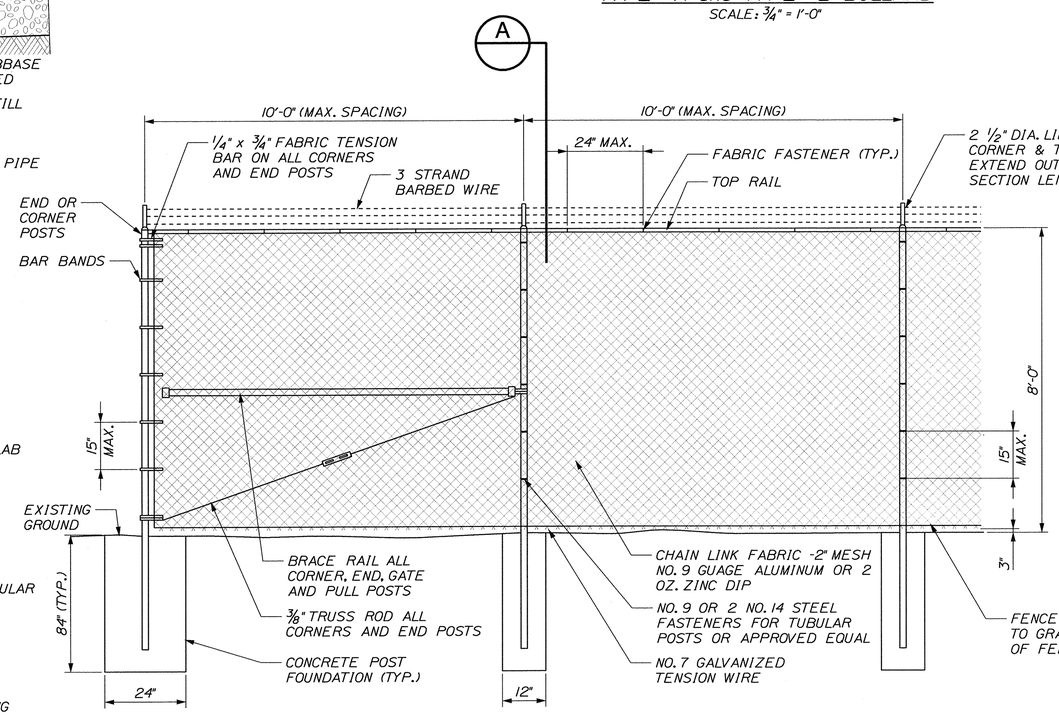

TYPICAL TYPE 1 END PANEL

TYPICAL INTERMEDIATE PANEL

NOTES:

1. TYPE 1 BRACING WILL BE USED AT CORNER AND END POSTS.
2. CONCRETE FOR POST FOUNDATIONS SHALL BE CLASS 'A'.
3. ALL POSTS SHALL BE SET IN CONCRETE.
4. CHAIN LINK FENCE SHALL BE INSTALLED WITH BARBS DOWN.
5. ALL COMPONENTS OF CHAIN LINK FENCE SHALL BE HDG STEEL IN ACCORDANCE WITH AASHTO M181.
6. FASTEN STEEL FABRIC FROM EXISTING FENCE TO NEW POST WHERE REQUIRED.

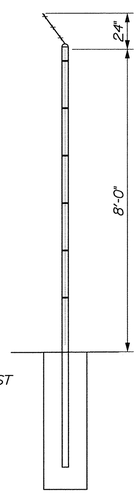

SECTION 'A'

NOT TO SCALE

TYPICAL CHAIN LINK FENCE

NOT TO SCALE

STATE OF MAINE
DEPARTMENT OF TRANSPORTATION

BR-1004(210)X

PIN 10042.10

BRIDGE NO. ____

BRIDGE PLANS

STATE OF MAINE BRIAN L. DORCAS No.9463 PROFESSIONAL ENGINEER

P.E. NUMBER

13-07-10

DATE

SIGNATURE

PROJ. MANAGER	B.L. DORCAS	BY	DATE
DESIGN-DETAILED	BCA	AEG	12.JUN.29
CHECKED-REVIEWED	GRF	RWS2	12.JUN.29
DESIGN2-DETAILED2			
DESIGN3-DETAILED3			
REVISIONS 1			
REVISIONS 2			
REVISIONS 3			
REVISIONS 4			
FIELD CHANGES			

INTERNATIONAL BRIDGE APPROACH
SAINT JOHN RIVER
FORT KENT AROOSTOOK

SPECIAL DETAILS

SHEET NUMBER

6

OF 81

Filename: $file$ Division: $wkgroup$ Username: $user$ Date:$date$

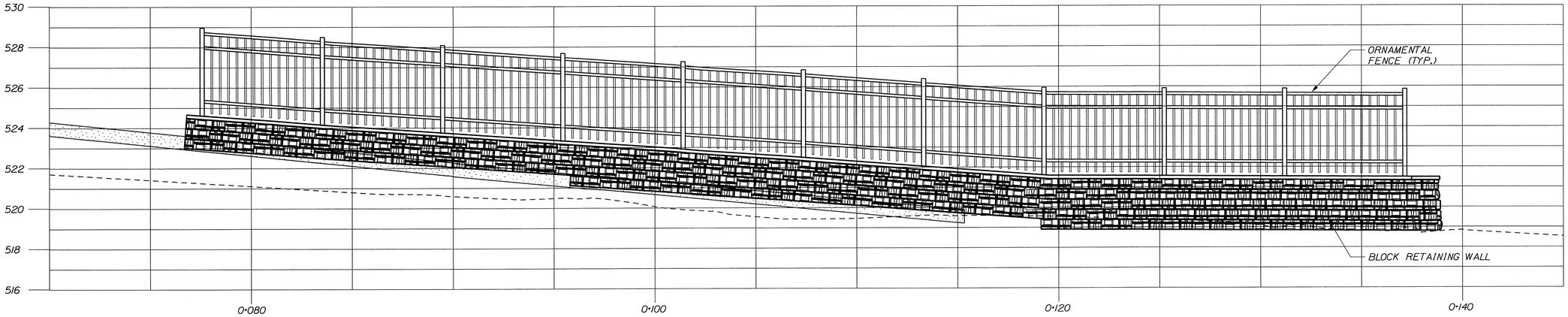

ELEVATION 1/16
SCALE: 3/8" = 1'-0"

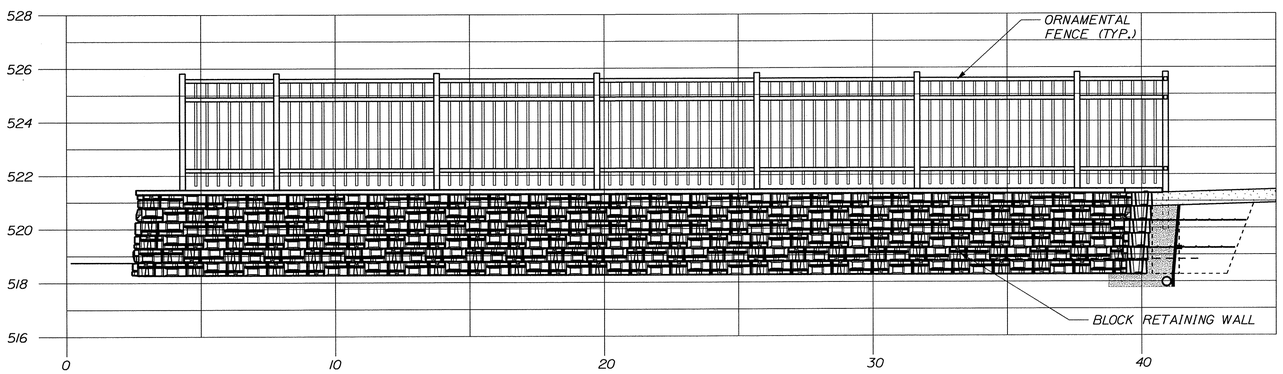

ELEVATION 2/16
SCALE: 3/8" = 1'-0"

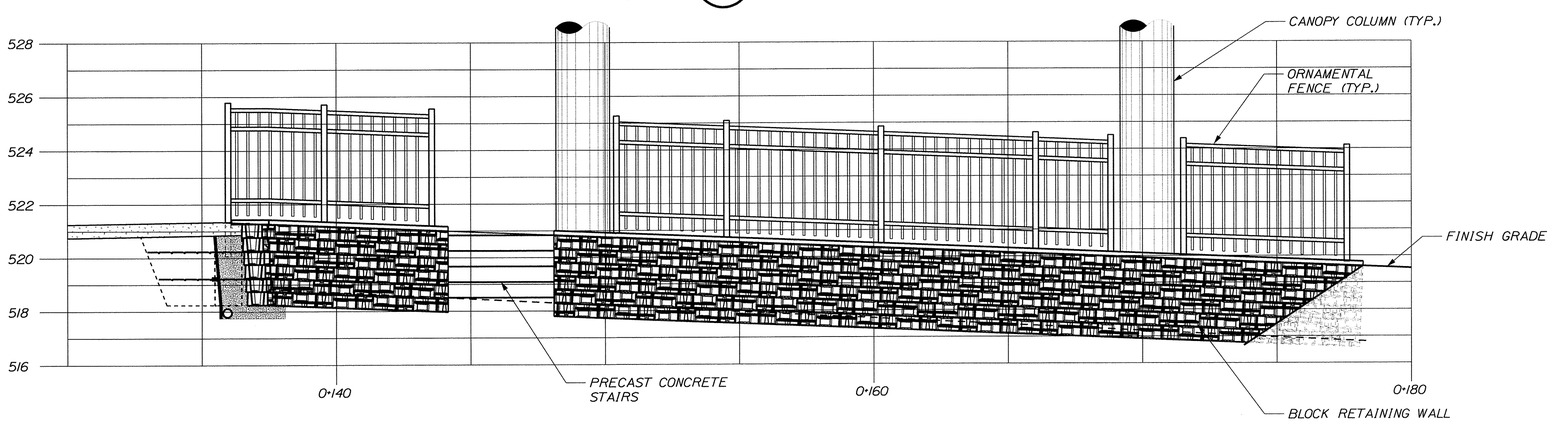

ELEVATION 3/16
SCALE: 3/8" = 1'-0"

NOTE:

FENCE TO BE JERITH INDUSTRIAL FENCE STYLE #202, SUPPLIED BY JERITH MANUFACTURING CO. INC. OR APPROVED EQUAL. TO BE INSTALLED AS PER MANUFACTURER'S RECOMMENDATIONS

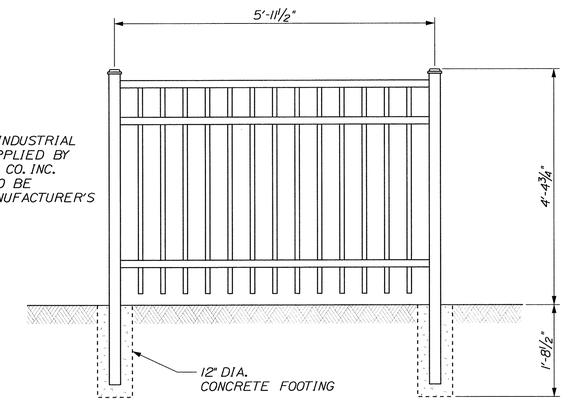

TYPICAL ORNAMENTAL FENCE DETAIL
SCALE: 3/4" = 1'-0"

NOTES:

1. SEE "TYPICAL RETAINING WALL AND SIDEWALK SECTION" ON DWG. 6 FOR DETAILS.
2. SEE "CANOPY APRON FINISH GRADE PLAN & SECTIONS", DWG. 64, FOR FINISH GRADE ELEVATIONS AT RETAINING WALLS.

STATE OF MAINE
DEPARTMENT OF TRANSPORTATION

BR-1004(210)X

PIN 10042.10

BRIDGE PLANS

BRIDGE NO. ____

STATE OF MAINE BRIAN L. DORCAS No.9463 PROFESSIONAL ENGINEER

P.E. NUMBER
12-08-29
DATE

SIGNATURE

		BY	DATE
PROJ. MANAGER	B.L. DORCAS		
DESIGN-DETAILED	BCA	AEG	12.JUN.29
CHECKED-REVIEWED	GRF	RWS2	12.JUN.29
DESIGN-DET.FIELD2			
DESIGN-DET.FIELD3			
REVISIONS 1			
REVISIONS 2			
REVISIONS 3			
REVISIONS 4			
FIELD CHANGES			

INTERNATIONAL BRIDGE APPROACH
SAINT JOHN RIVER
FORT KENT AROOSTOOK

RETAINING WALL ELEVATIONS

SHEET NUMBER
7
OF 81

Filename: $file$ Division: $wkgroup$ Username: $user$ Date:$date$

BOREHOLE RECORD

PAGE 1 of 2

CLIENT: New Brunswick Department of Transportation — PROJECT No. (65)0600-456.1
PROJECT: New Brunswick Dept. of Transportation — BOREHOLE No. BH 05
DATE OF BOREHOLE (dd-mm-yy): 16/12/2002 — WATER LEVEL: — DATUM: Geodetic

DEPTH (m)	ELEV. (m)	DESCRIPTION	SAMPLE TYPE	SAMPLE NUMBER	RECOVERY (mm)	N-VALUE OR RQD	OTHER TESTS
0	155.90	Compact to dense grey SILT and SAND, some gravel					
			SS	1	400	11	
			SS	2	600	26	
5	150.72	Compact grey SILT, occasional sand and gravel	SS	3	300	41	
			SS	4	600	26	
			SS	5	600	13	
			SS	6	250	12	
10	146.15	Compact to very dense grey SILT and SAND, some gravel					
			SS	7	250	27	
			SS	8	250	112	
			SS	9	500	42	
			SS	10	200	142	
16	139.75	Very dense grey Silty SAND and GRAVEL	SS	11	300	110	
18	137.61	Very dense grey Silty, Gravelly SAND, some cobbles	SS	12	50	100/0.15	

Undrained Shear Strength, kPa (20 40 60 80); Water Content & Atterberg Limits (W_P W W_L); Dynamic Penetration Test, blows/0.3m; Standard Penetration Test, blows/0.3m (10 20 30 40 50 60 70 80 90)

△ Unconfined Compression Test
□ Field Vane Test
■ Remoulded

ADI Limited, 1133 Regent Street, Fredericton, New Brunswick, E3B3Z2, Tel 506-452-9000

GEOTECHNICAL 60065 (F) - AGI.GDT 06/01/10

BOREHOLE RECORD

PAGE 2 of 2

CLIENT: New Brunswick Department of Transportation — PROJECT No. (65)0609-456.1
PROJECT: New Brunswick Dept. of Transportation — BOREHOLE No. BH 05
DATE OF BOREHOLE (dd-mm-yy): 16/12/2002 — WATER LEVEL: — DATUM: Geodetic

DEPTH (m)	ELEV. (m)	DESCRIPTION	SAMPLE TYPE	SAMPLE NUMBER	RECOVERY (mm)	N-VALUE OR RQD	OTHER TESTS
20	135.90	Very dense grey Silty, Gravelly SAND, some cobbles *(continued)*					
			SS	13	450	145	
			SS	14	0	100/0.15	
			RC	15	8%	0	
			RC	16	25%	0	
			RC	17	7%	0	
			RC	18	4%	0	
			RC	19	27%	0	
			RC	20	33%	0	
			RC	21	33%	0	
			RC	22	42%	0	
			RC	23	42%	0	
			RC	24	25%	0	
			RC	25	33%	0	
37	118.71	Bluish grey SHALE (BEDROCK), slightly weathered, low to high strength, beds dipping 60 to 75°, excellent quality.	RC	26	71%	0	
			RC	27	100%	83	
			RC	28	100%	53	
			RC	29	100%	11	
40	116.13	End of BH 05 at 39.77m BGS					

Undrained Shear Strength, kPa (20 40 60 80); Water Content & Atterberg Limits (W_P W W_L); Dynamic Penetration Test, blows/0.3m; Standard Penetration Test, blows/0.3m (10 20 30 40 50 60 70 80 90)

△ Unconfined Compression Test
□ Field Vane Test
■ Remoulded

ADI Limited, 1133 Regent Street, Fredericton, New Brunswick, E3B3Z2, Tel 506-452-9000

GEOTECHNICAL 60065 (F) - AGI.GDT 06/01/10

BOREHOLE RECORD

PAGE 1 of 3

CLIENT: New Brunswick Department of Transportation — PROJECT No. 0600-555.1
PROJECT: Clair - Fort Kent Int. Bridge — BOREHOLE No. BH-10
DATE OF BOREHOLE (dd-mm-yy): 28/09/2009 — WATER LEVEL: N/A — DATUM: Geodetic

DEPTH (m)	ELEV. (m)	DESCRIPTION	SAMPLE TYPE	SAMPLE NUMBER	RECOVERY (mm)	N-VALUE OR RQD	OTHER TESTS
0	159.15	Very dense brown Silty SAND and GRAVEL, trace of cobbles: FILL					
			SS	1	525	74	
			SS	2	400	66	
4	154.58	Compact grey to brown Sandy SILT, some gravel	SS	3	425	14	
6	153.21	Soft brown Silty SAND and GRAVEL	SS	4	150	18	
7	151.53	Loose to dense grey Silty Clayey SAND and GRAVEL : TILL	SS	5	350	10	
			SS	6	475	7	
			SS	7	425	13	
			SS	8	0	20	
			SS	9	250	31	
14	144.52	Very dense Silty SAND and GRAVEL, trace of cobbles, and boulders	SS	10	350	25	
			SS	11	175	55	
			SS	12	225	52	
			SS	13	175	68	

Undrained Shear Strength, kPa (20 40 60 80); Water Content & Atterberg Limits (W_P W W_L); Dynamic Penetration Test, blows/0.3m; Standard Penetration Test, blows/0.3m (10 20 30 40 50 60 70 80 90)

△ Unconfined Compression Test
□ Field Vane Test
■ Remoulded

ADI Limited, 1133 Regent Street, Fredericton, New Brunswick, E3B3Z2, Tel 506-452-9000

GEOTECHNICAL 60065 (F) - AGI.GDT 06/01/10

BOREHOLE RECORD

PAGE 2 of 3

CLIENT: New Brunswick Department of Transportation — PROJECT No. 0600-555.1
PROJECT: Clair - Fort Kent Int. Bridge — BOREHOLE No. BH-10
DATE OF BOREHOLE (dd-mm-yy): 28/09/2009 — WATER LEVEL: N/A — DATUM: Geodetic

DEPTH (m)	ELEV. (m)	DESCRIPTION	SAMPLE TYPE	SAMPLE NUMBER	RECOVERY (mm)	N-VALUE OR RQD	OTHER TESTS
20	139.15	Very dense Silty SAND and GRAVEL, trace of cobbles, and boulders *(continued)*					
			SS	14	275	95	
			SS	15	300	75	
			SS	16	225	n/a	
			SS	17	0	n/a	
			SS	18	0	n/a	
			RC	19	10%		
			RC	20	53%		
			RC	21	30%		
			RC	22	0%		
			RC	23	20%		
			RC	24	26%		
			RC	25	40%		
			RC	26	73%		
			RC	27	30%		
38	120.80	Grey Shale BEDROCK	RC	28	92%	31	

Undrained Shear Strength, kPa (20 40 60 80); Water Content & Atterberg Limits (W_P W W_L); Dynamic Penetration Test, blows/0.3m; Standard Penetration Test, blows/0.3m (10 20 30 40 50 60 70 80 90)

△ Unconfined Compression Test
□ Field Vane Test
■ Remoulded

ADI Limited, 1133 Regent Street, Fredericton, New Brunswick, E3B3Z2, Tel 506-452-9000

GEOTECHNICAL 60065 (F) - AGI.GDT 06/01/10

BOREHOLE RECORD

PAGE 3 of 3

CLIENT: New Brunswick Department of Transportation — PROJECT No. 0600-555.1
PROJECT: Clair - Fort Kent Int. Bridge — BOREHOLE No. BH-10
DATE OF BOREHOLE (dd-mm-yy): 28/09/2009 — WATER LEVEL: N/A — DATUM: Geodetic

DEPTH (m)	ELEV. (m)	DESCRIPTION	SAMPLE TYPE	SAMPLE NUMBER	RECOVERY (mm)	N-VALUE OR RQD	OTHER TESTS
40	119.15	Grey Shale BEDROCK *(continued)*	RC	29	79%	23	
			RC	30	100%	75	
41	117.67	End of Hole					

Undrained Shear Strength, kPa (20 40 60 80); Water Content & Atterberg Limits (W_P W W_L); Dynamic Penetration Test, blows/0.3m; Standard Penetration Test, blows/0.3m (10 20 30 40 50 60 70 80 90)

△ Unconfined Compression Test
□ Field Vane Test
■ Remoulded

ADI Limited, 1133 Regent Street, Fredericton, New Brunswick, E3B3Z2, Tel 506-452-9000

GEOTECHNICAL 60065 (F) - AGI.GDT 06/01/10

NOTE:

1. SEE DWG. 5 FOR BOREHOLE LOCATIONS.

STATE OF MAINE
DEPARTMENT OF TRANSPORTATION

BR-1004(210)X

PIN 10042.10

BRIDGE NO. ____ BRIDGE PLANS

STATE OF MAINE — BRIAN L. DORCAS No. 9453 — PROFESSIONAL ENGINEER

		BY	DATE
PROJ. MANAGER	B.L. DORCAS		
DESIGN-DETAILED		AEC	12.JUN.25
CHECKED-REVIEWED		RWS2	12.JUN.25
DESIGN2-DETAILED2			
DESIGN3-DETAILED3			
REVISIONS 1			
REVISIONS 2			
REVISIONS 3			
REVISIONS 4			
FIELD CHANGES			

SIGNATURE — P.E. NUMBER — DATE 12-06-29

INTERNATIONAL BRIDGE APPROACH
SAINT JOHN RIVER
FORT KENT — AROOSTOOK

BOREHOLE LOGS

SHEET NUMBER 8 OF 81

Filename: $file$ Division: $wkgroup$ Username: $user$ Date:$date$

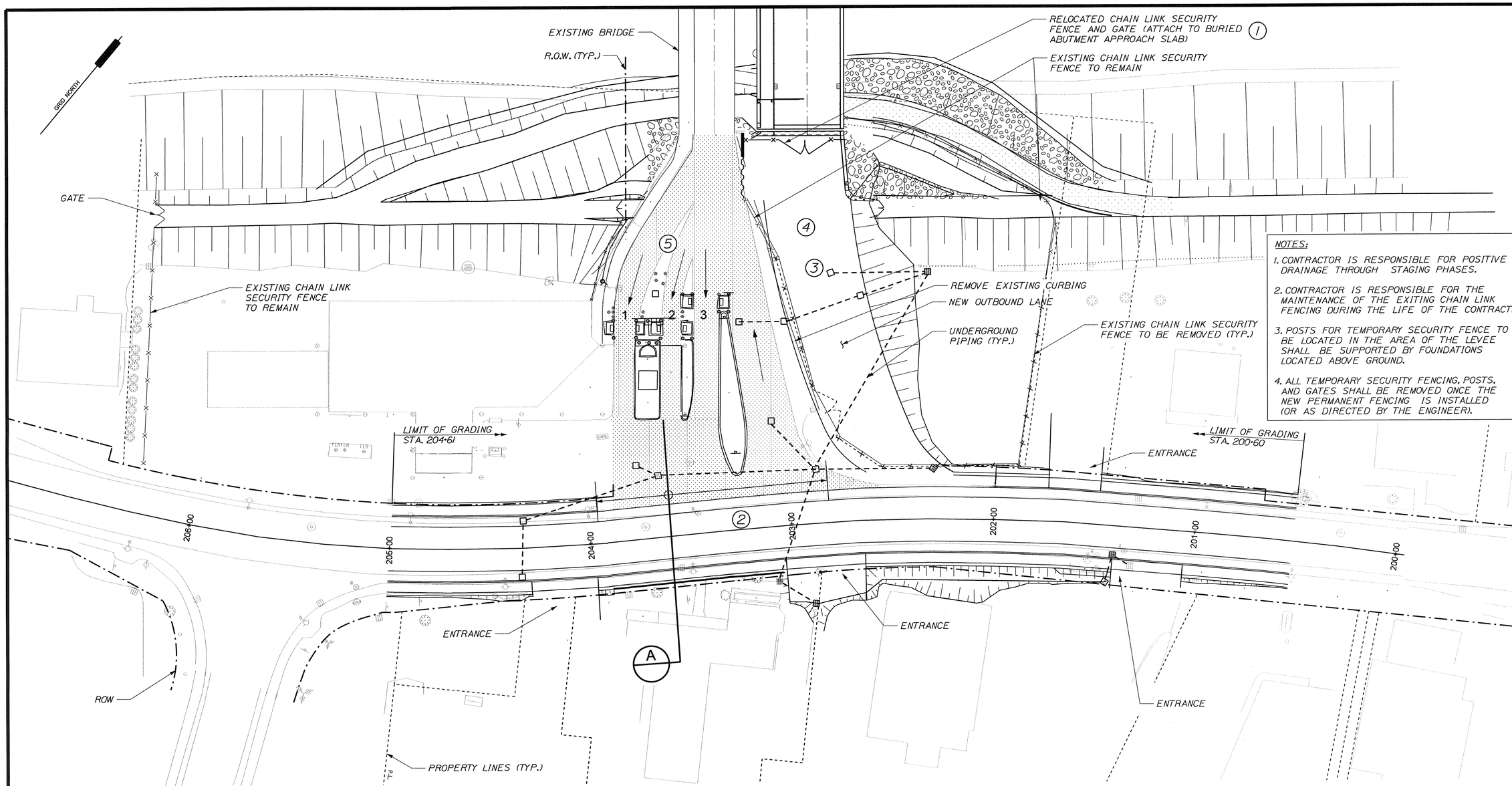

NOTES:

1. CONTRACTOR IS RESPONSIBLE FOR POSITIVE DRAINAGE THROUGH STAGING PHASES.
2. CONTRACTOR IS RESPONSIBLE FOR THE MAINTENANCE OF THE EXITING CHAIN LINK FENCING DURING THE LIFE OF THE CONTRACT.
3. POSTS FOR TEMPORARY SECURITY FENCE TO BE LOCATED IN THE AREA OF THE LEVEE SHALL BE SUPPORTED BY FOUNDATIONS LOCATED ABOVE GROUND.
4. ALL TEMPORARY SECURITY FENCING, POSTS, AND GATES SHALL BE REMOVED ONCE THE NEW PERMANENT FENCING IS INSTALLED (OR AS DIRECTED BY THE ENGINEER).

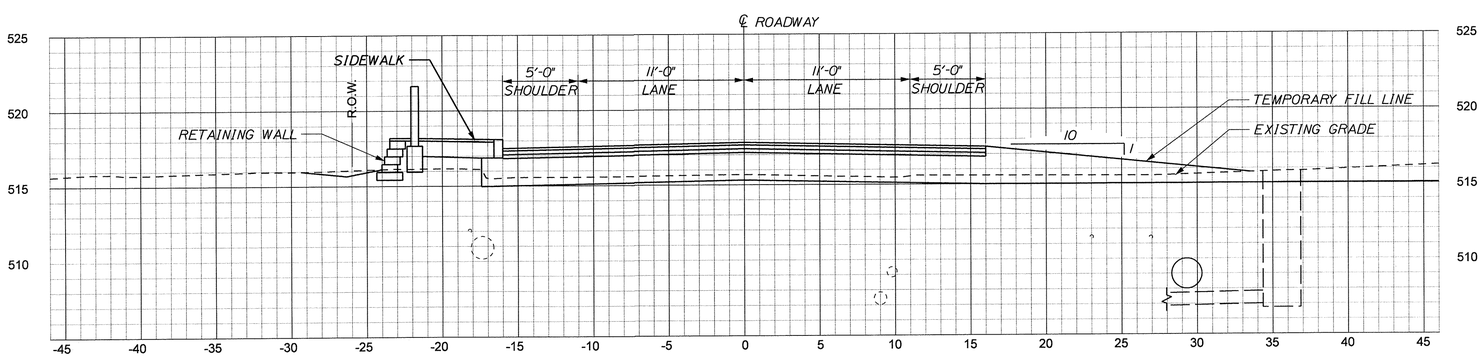

SECTION 'A'
SCALE: 1" = 5'-0"

LEGEND:

- AREA OPEN TO TRAFFIC

STAGE 1:

1. - REMOVE AND RELOCATE SECURITY FENCING
2. - UPGRADE ROUTE 1
3. - UNDERGROUND PIPING (STORM, WATER AND SEWER) TO TEMPORARY ELEVATIONS
4. - GRADE NEW BRIDGE APPROACH (OUTBOUND LANE) TO INTERMEDIATE ELEVATION
5. - ALL EXISTING LANES OPEN TO TRAFFIC WITH THE USE OF SIGNAGE AND FLAGGING

STATE OF MAINE
DEPARTMENT OF TRANSPORTATION

BR-1004(210)X

PIN 10042.10

BRIDGE PLANS

BRIDGE NO. _____

STATE OF MAINE
BRIAN L. DORCAS
No.9463
LICENSED
PROFESSIONAL ENGINEER

P.E. NUMBER

13-07-12
DATE

SIGNATURE

PROJ. MANAGER	B.L. DORCAS	
DESIGN-DETAILED	PD	12JUN'29
CHECKED-REVIEWED	RWS2	12JUN'29
DESIGN2-DETAILED2		
DESIGN3-DETAILED3		
REVISIONS 1		
REVISIONS 2		
REVISIONS 3		
REVISIONS 4		
FIELD CHANGES		

INTERNATIONAL BRIDGE APPROACH
SAINT JOHN RIVER
FORT KENT AROOSTOOK

MAINTENANCE OF TRAFFIC
STAGE 1

SHEET NUMBER
9
OF 81

Filename: $file$ Division: $wkgroup$ Username: $user$ Date:$date$

GRID NORTH

R.O.W. (TYP.)

EXISTING CHAIN LINK SECURITY FENCE TO REMAIN

EXISTING CHAIN LINK SECURITY FENCE TO BE REMOVED (TYP.) (1)

GATE

EXISTING CHAIN LINK SECURITY FENCE TO REMAIN

(6) CANOPY

UNDERGROUND PIPING (TYP.)

LIMIT OF GRADING STA. 204+61

(4) CANOPY FOOTINGS (TYP.)

(5) BOOTHS

LIMIT OF GRADING STA. 200+60

206+00 205+00 204+00 203+00 202+00 201+00 200+00

PROPERTY LINES (TYP.)

LEGEND:

- AREA OPEN TO TRAFFIC

STAGE 2:

(1) - REMOVE EXISTING CHAIN LINK SECURITY FENCE

(2) - COMPLETE OUTBOUND DETOUR FROM NEW LANE TO OLD BRIDGE

(3) - REMOVE EXISTING ISLANDS BETWEEN LANE 2 & 3 and 3 & 4 and RPM'S

(4) - BUILD CANOPY FOOTINGS AND BOOTH FOUNDATIONS

(5) - PLACE HIGH/ LOW BOOTH AND STANDARD BOOTHS

(6) - ERECT CANOPY

(7) - LANE 1 AND OUTBOUND DETOUR LANE OPEN TO TRAFFIC

(8) - NO COMMERCIAL TRAFFIC

STATE OF MAINE
DEPARTMENT OF TRANSPORTATION

BR-1004(210)X

PIN 10042.10

BRIDGE PLANS

BRIDGE NO. ____

STATE OF MAINE
BRIAN L. DORCAS
No.9463
LICENSED
PROFESSIONAL ENGINEER

P.E. NUMBER 13-07-12
SIGNATURE DATE

		BY	DATE
PROJ. MANAGER	B.L. DORCAS		
DESIGN-DETAILED		PD	12.JUN.29
CHECKED-REVIEWED		RWS2	12.JUN.29
DESIGN2-DETAILED2			
DESIGN3-DETAILED3			
REVISIONS 1			
REVISIONS 2			
REVISIONS 3			
REVISIONS 4			
FIELD CHANGES			

INTERNATIONAL BRIDGE APPROACH
SAINT JOHN RIVER
FORT KENT AROOSTOOK

MAINTENANCE OF TRAFFIC
STAGE 2

SHEET NUMBER
10
OF 81

Filename: $file$ Division: $wkgroup$ Username: $user$ Date:$date$

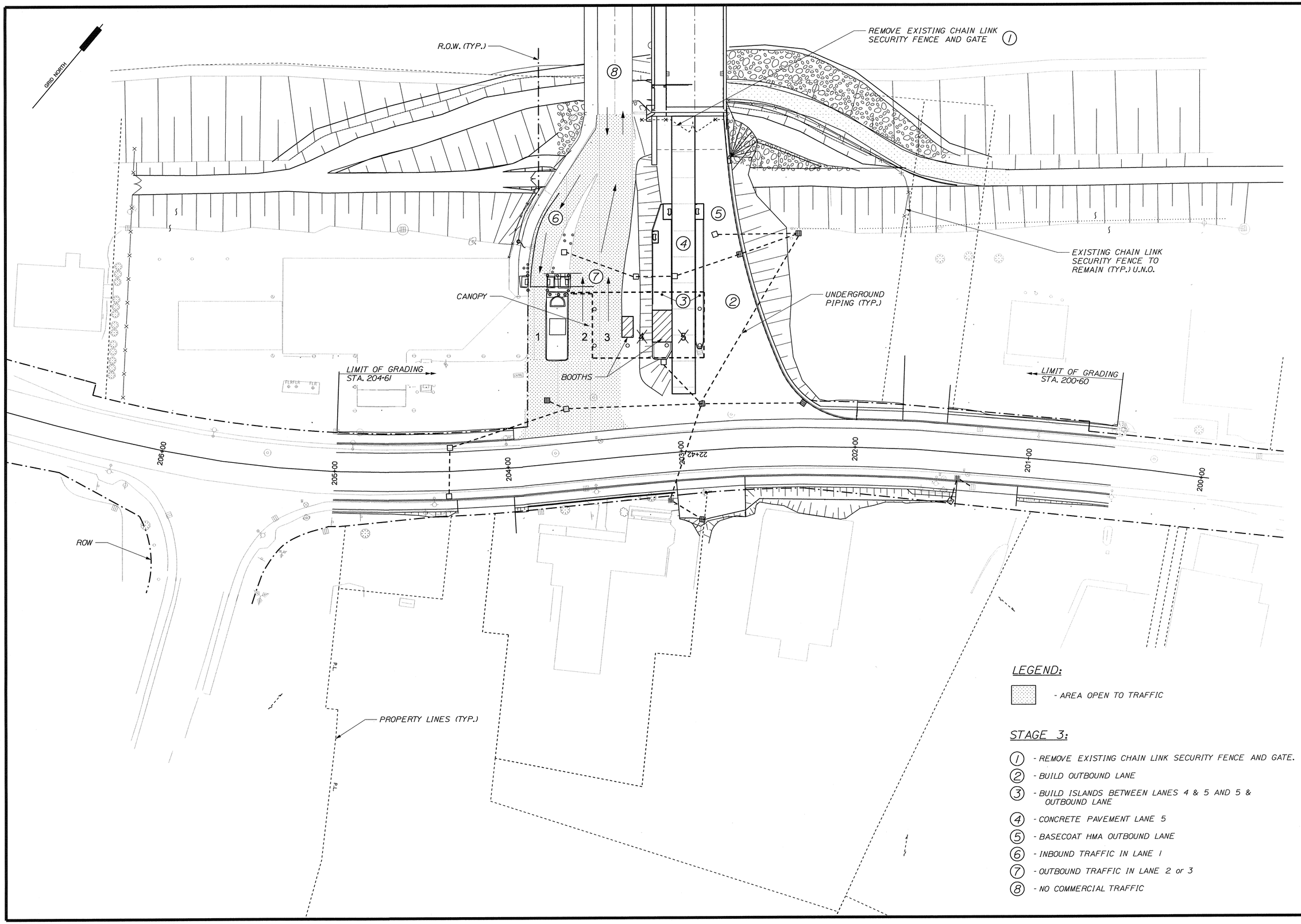

STATE OF MAINE
DEPARTMENT OF TRANSPORTATION

BR-1004(210)X

PIN 10042.10

BRIDGE PLANS

BRIDGE NO. _____

STATE OF MAINE
BRIAN L. DORCAS
No.9463
PROFESSIONAL ENGINEER

P.E. NUMBER 13-07-12
DATE

		BY	DATE
PROJ. MANAGER	B.L. DORCAS		
DESIGN-DETAILED		PD	12.JUN.29
CHECKED-REVIEWED		RWS2	12.JUN.29
DESIGN2-DETAILED2			
DESIGN3-DETAILED3			
REVISIONS 1			
REVISIONS 2			
REVISIONS 3			
REVISIONS 4			
FIELD CHANGES			

SIGNATURE

INTERNATIONAL BRIDGE APPROACH
SAINT JOHN RIVER
AROOSTOOK
FORT KENT

MAINTENANCE OF TRAFFIC
STAGE 3

SHEET NUMBER
11
OF 81

Filename: $file$ Division: $wkgroup$ Username: $user$ Date:$date$

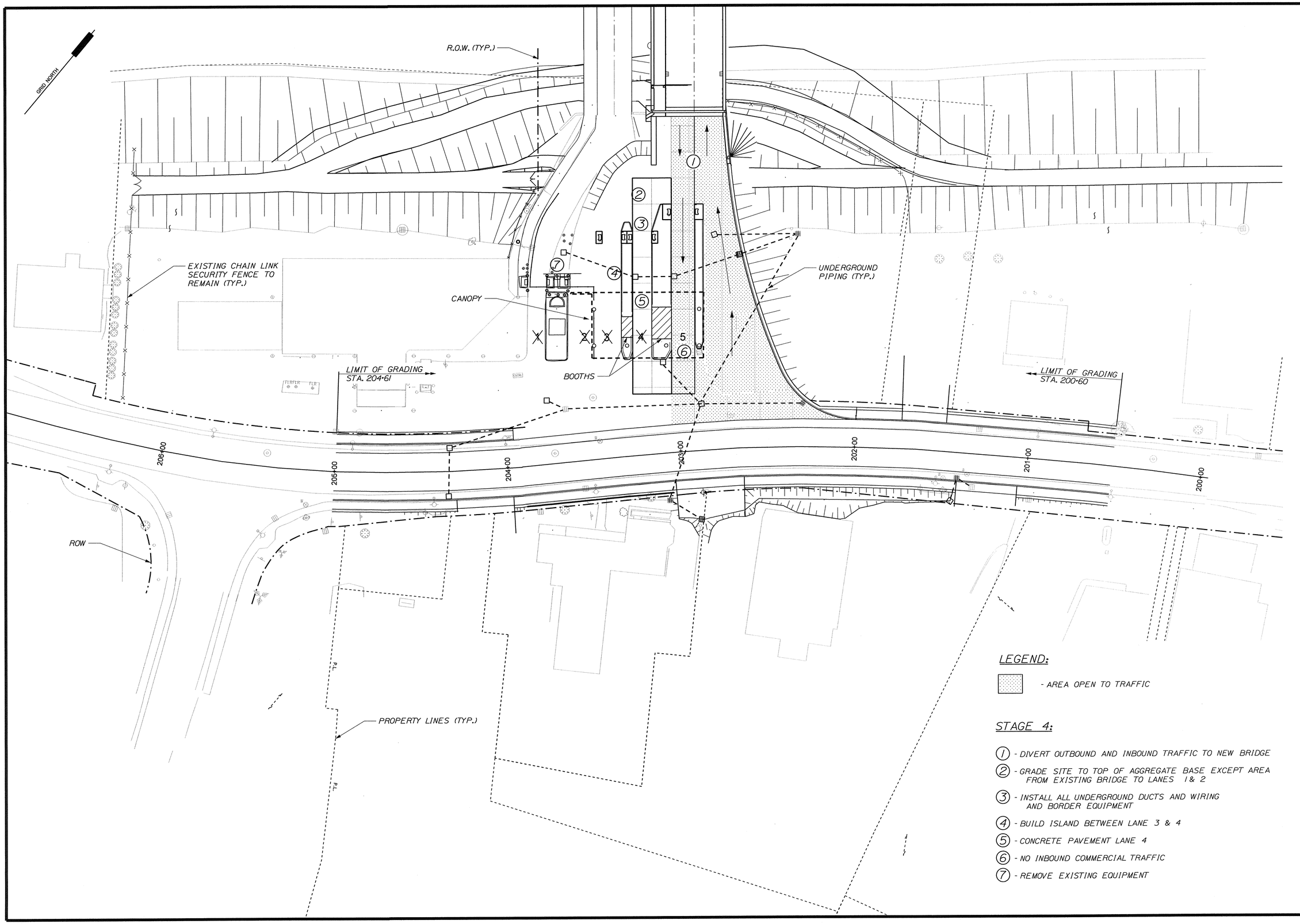

STATE OF MAINE
DEPARTMENT OF TRANSPORTATION

BR-1004(210)X

PIN 10042.10

BRIDGE PLANS

BRIDGE NO. ____

STATE OF MAINE
BRIAN L. DORCAS
No.9463
LICENSED
PROFESSIONAL ENGINEER

	BY	DATE
PROJ. MANAGER	B.L. DORCAS	
DESIGN-DETAILED	PD	12.JUN.29
CHECKED-REVIEWED	RWS2	12.JUN.29
DESIGN2-DETAILED2		
DESIGN3-DETAILED3		
REVISIONS 1		
REVISIONS 2		
REVISIONS 3		
REVISIONS 4		
FIELD CHANGES		

SIGNATURE

P.E. NUMBER

13-07-12
DATE

INTERNATIONAL BRIDGE APPROACH
SAINT JOHN RIVER
FORT KENT AROOSTOOK

MAINTENANCE OF TRAFFIC
STAGE 4

SHEET NUMBER
12
OF 81

Filename: $file$ Division: $wkgroup$ Username: $user$ Date:$date$

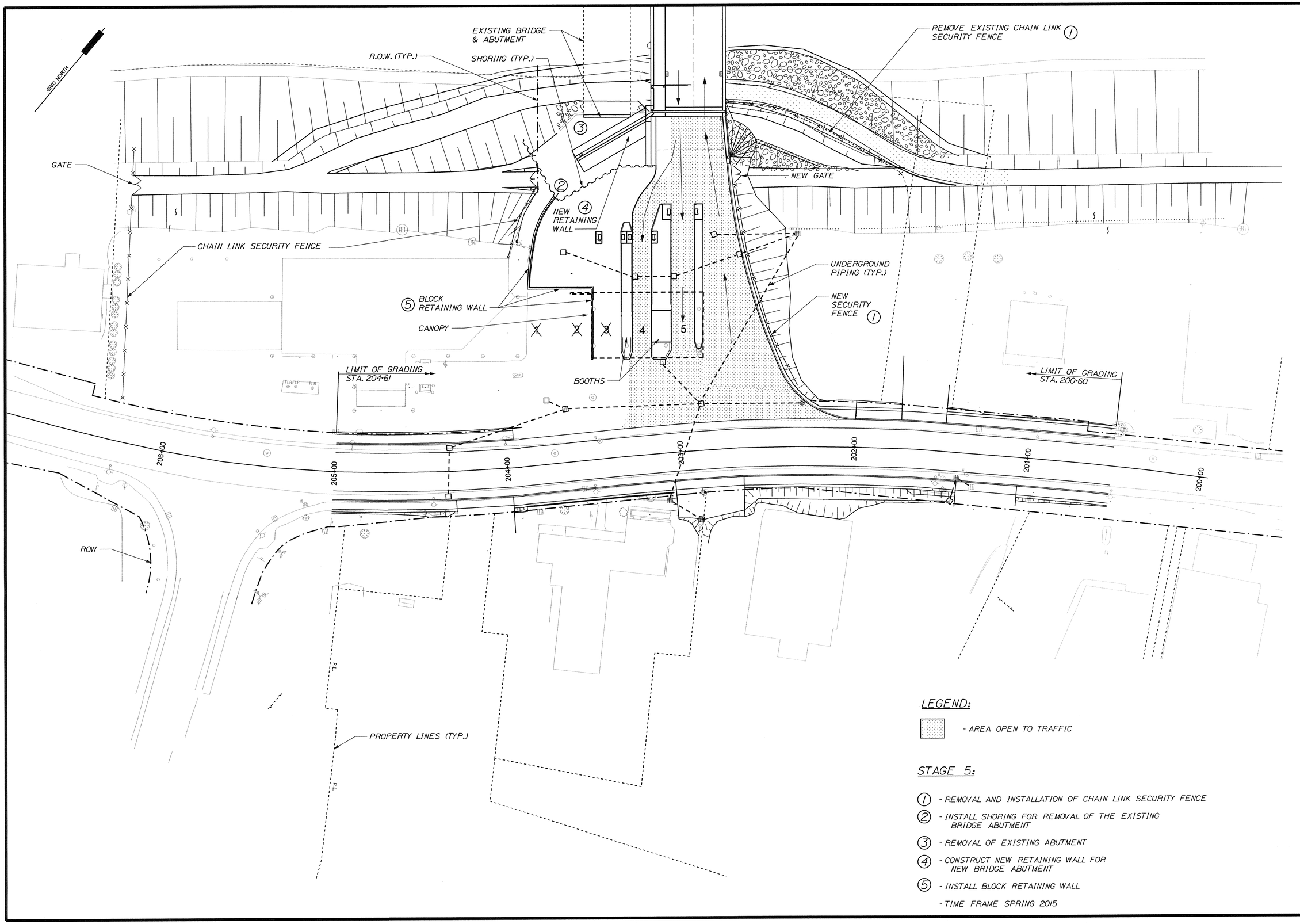

LEGEND:

- AREA OPEN TO TRAFFIC

STAGE 5:

(1) - REMOVAL AND INSTALLATION OF CHAIN LINK SECURITY FENCE

(2) - INSTALL SHORING FOR REMOVAL OF THE EXISTING BRIDGE ABUTMENT

(3) - REMOVAL OF EXISTING ABUTMENT

(4) - CONSTRUCT NEW RETAINING WALL FOR NEW BRIDGE ABUTMENT

(5) - INSTALL BLOCK RETAINING WALL

- TIME FRAME SPRING 2015

STATE OF MAINE
DEPARTMENT OF TRANSPORTATION

BR-1004(210)X

PIN 10042.10

BRIDGE PLANS

BRIDGE NO. ____

STATE OF MAINE
BRIAN L. DORCAS
No.9463
LICENSED
PROFESSIONAL ENGINEER

P.E. NUMBER
13-07-12
DATE

	BY	DATE
PROJ. MANAGER B.L. DORCAS		
DESIGN-DETAILED	PD	12-JUN-29
CHECKED-REVIEWED	RWS2	12-JUN-29
DESIGN2-DETAILED2		
DESIGN3-DETAILED3		
REVISIONS 1		
REVISIONS 2		
REVISIONS 3		
REVISIONS 4		
FIELD CHANGES		

INTERNATIONAL BRIDGE APPROACH
SAINT JOHN RIVER
FORT KENT AROOSTOOK

MAINTENANCE OF TRAFFIC
STAGE 5

SHEET NUMBER
13
OF 81

Filename: $file$ Division: $wkgroup$ Username: $user$ Date:$date$

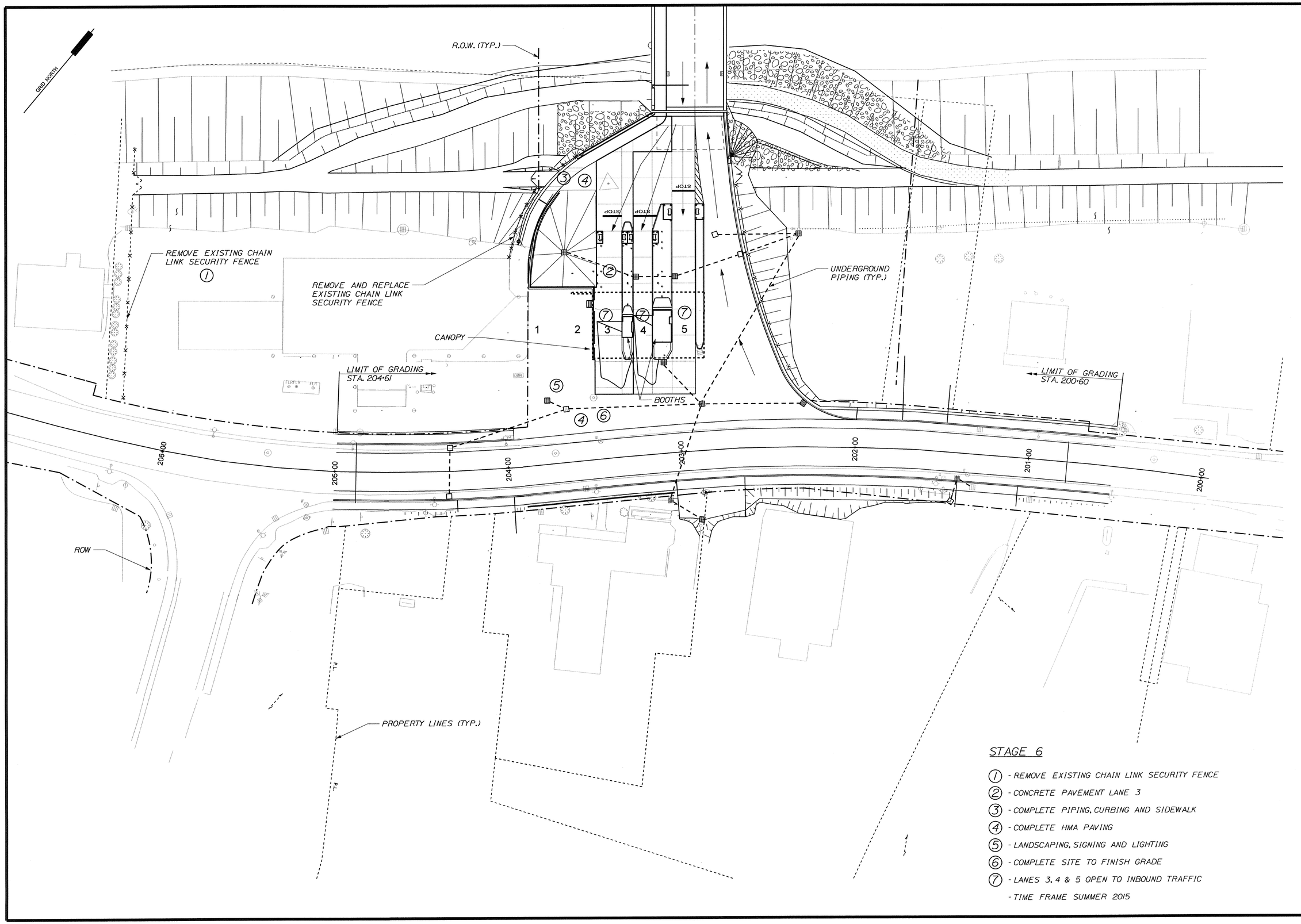

STAGE 6

1 - REMOVE EXISTING CHAIN LINK SECURITY FENCE
2 - CONCRETE PAVEMENT LANE 3
3 - COMPLETE PIPING, CURBING AND SIDEWALK
4 - COMPLETE HMA PAVING
5 - LANDSCAPING, SIGNING AND LIGHTING
6 - COMPLETE SITE TO FINISH GRADE
7 - LANES 3, 4 & 5 OPEN TO INBOUND TRAFFIC
- TIME FRAME SUMMER 2015

STATE OF MAINE
DEPARTMENT OF TRANSPORTATION

BR-1004(210)X

PIN 10042.10

BRIDGE NO. ____

BRIDGE PLANS

STATE OF MAINE
BRIAN L. DORCAS
No.9463
LICENSED
PROFESSIONAL ENGINEER

SIGNATURE		
P.E. NUMBER 13-07-12		
DATE		

PROJ. MANAGER	B.L. DORCAS	
DESIGN-DETAILED	PD	12.JUN.29
CHECKED-REVIEWED	RWS2	12.JUN.29
DESIGN2-DETAILED2		
DESIGN3-DETAILED3		
REVISIONS 1		
REVISIONS 2		
REVISIONS 3		
REVISIONS 4		
FIELD CHANGES		

INTERNATIONAL BRIDGE APPROACH
SAINT JOHN RIVER
FORT KENT AROOSTOOK

MAINTENANCE OF TRAFFIC
STAGE 6

SHEET NUMBER
14
OF 81

Filename: $file$ Division: $wkgroup$ Username: $user$ Date:$date$

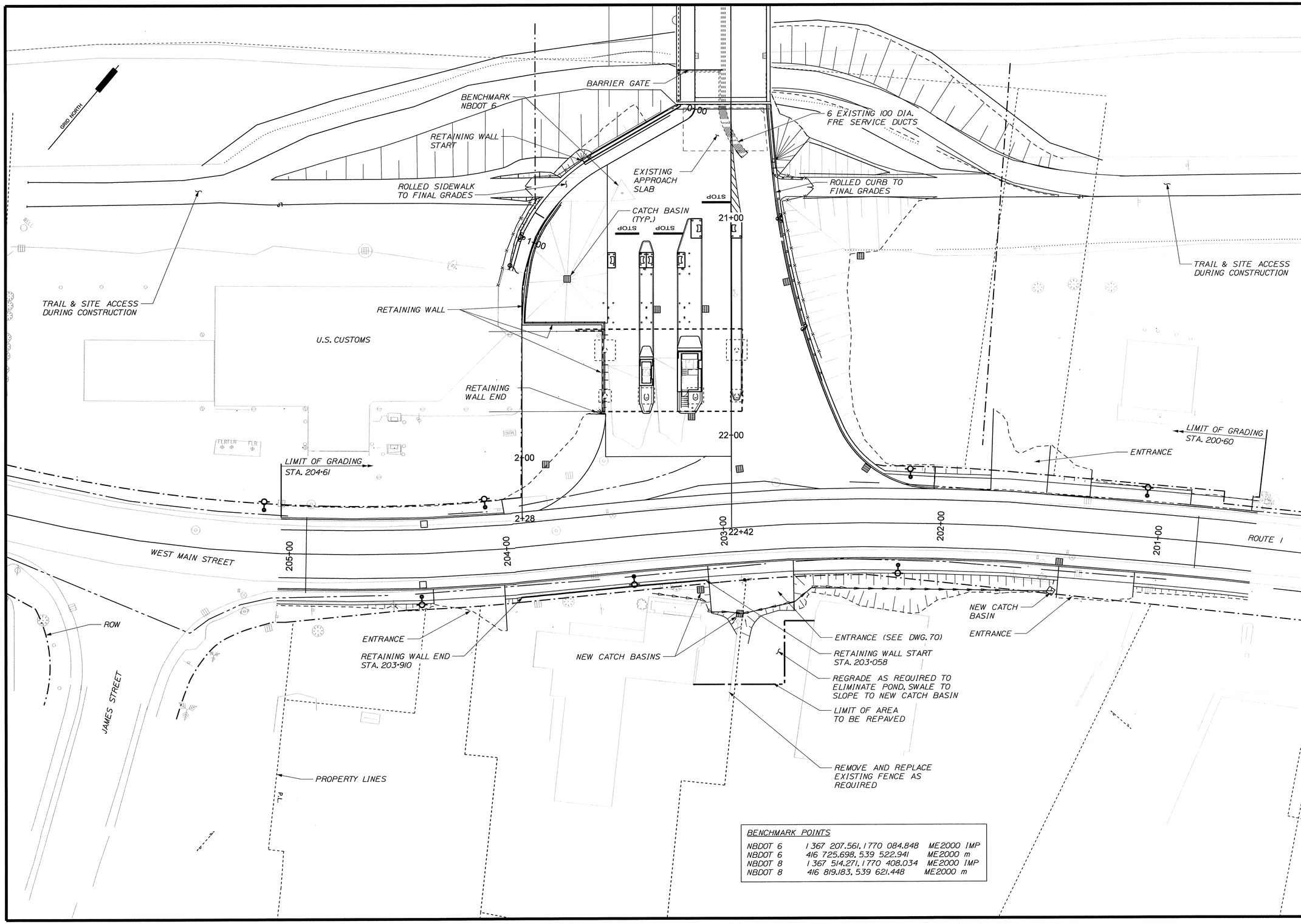

BENCHMARK POINTS

NBDOT 6	1 367 207.561, 1 770 084.848	ME2000 IMP
NBDOT 6	416 725.698, 539 522.941	ME2000 m
NBDOT 8	1 367 514.271, 1 770 408.034	ME2000 IMP
NBDOT 8	416 819.183, 539 621.448	ME2000 m

STATE OF MAINE
DEPARTMENT OF TRANSPORTATION

BR-1004(210)X

PIN 10042.10

BRIDGE PLANS

BRIDGE NO. ____

STATE OF MAINE BRIAN L. DORCAS No. 9463 LICENSED PROFESSIONAL ENGINEER

P.E. NUMBER 12-06-29 DATE

SIGNATURE

	BY	DATE
PROJ. MANAGER B.L. DORCAS		
DESIGN-DETAILED BLD	AEG	12.JUN.29
CHECKED-REVIEWED	RWS2	12.JUN.29
DESIGN2-DETAILED2		
DESIGN3-DETAILED3		
REVISIONS 1		
REVISIONS 2		
REVISIONS 3		
REVISIONS 4		
FIELD CHANGES		

INTERNATIONAL BRIDGE APPROACH
SAINT JOHN RIVER
FORT KENT AROOSTOOK

GENERAL PLAN

SHEET NUMBER
15
OF 81

Filename: $file$ Division: $wkgroup$ Username: $user$ Date:$date$

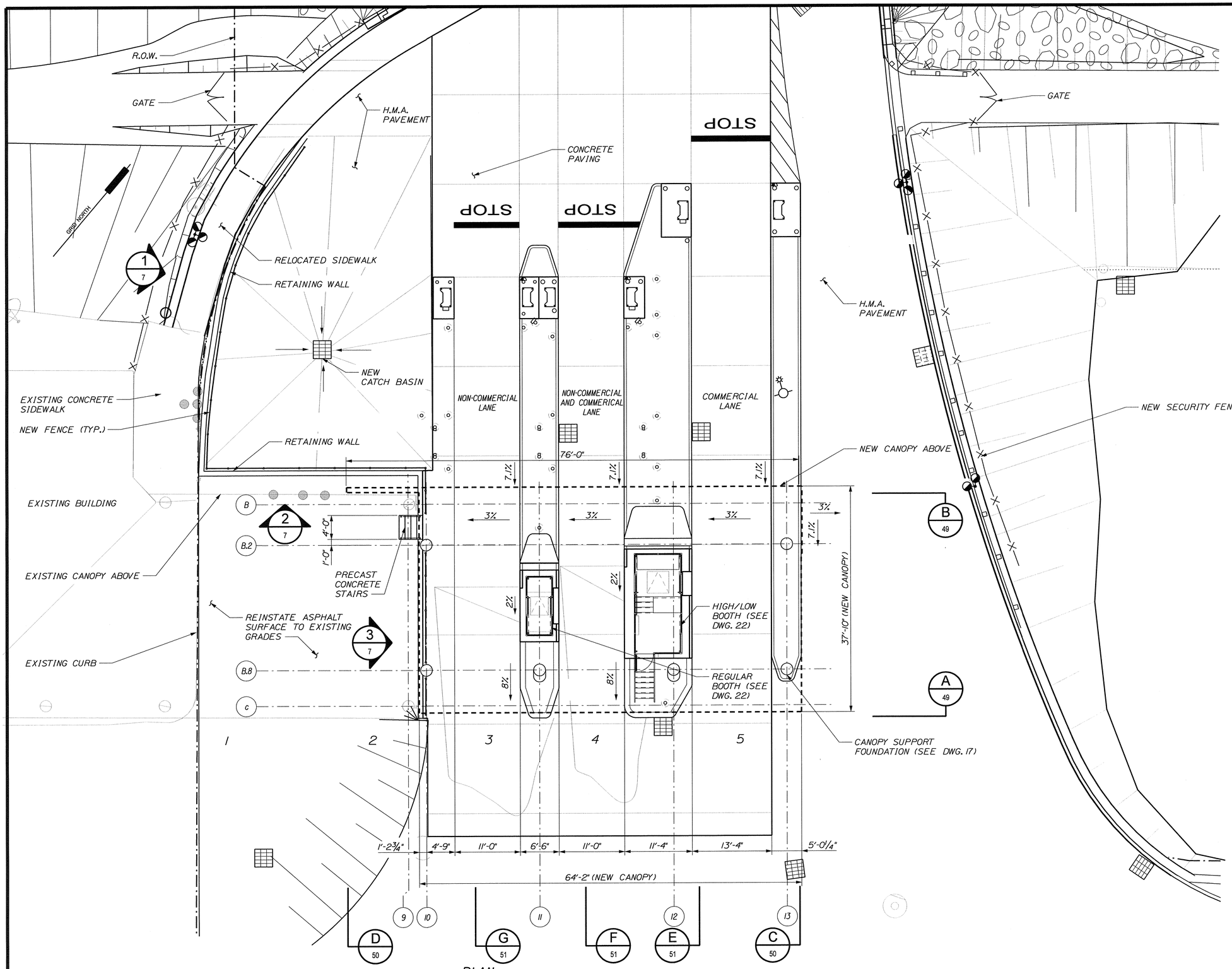

PLAN
SCALE: 1/8" = 1'-0"

STATE OF MAINE
DEPARTMENT OF TRANSPORTATION

BR-1004(210)X

PIN 10042.10

BRIDGE PLANS

BRIDGE NO. ____

STATE OF MAINE
BRIAN L. DORCAS
No.9463
PROFESSIONAL ENGINEER

P.E. NUMBER
13-07-12
DATE
SIGNATURE

		BY	DATE
PROJ. MANAGER	B.L. DORCAS		
DESIGN-DETAILED	BLD	AEG	12.JUN.29
CHECKED-REVIEWED		RWS2	12.JUN.29
DESIGN2-DETAILED2			
DESIGN3-DETAILED3			
REVISIONS 1			
REVISIONS 2			
REVISIONS 3			
REVISIONS 4			
FIELD CHANGES			

INTERNATIONAL BRIDGE APPROACH
SAINT JOHN RIVER
FORT KENT AROOSTOOK

ENLARGED SITE PLAN

SHEET NUMBER
16
OF 81

Filename: $file$ Division: $wkgroup$ Username: $user$ Date:$date$

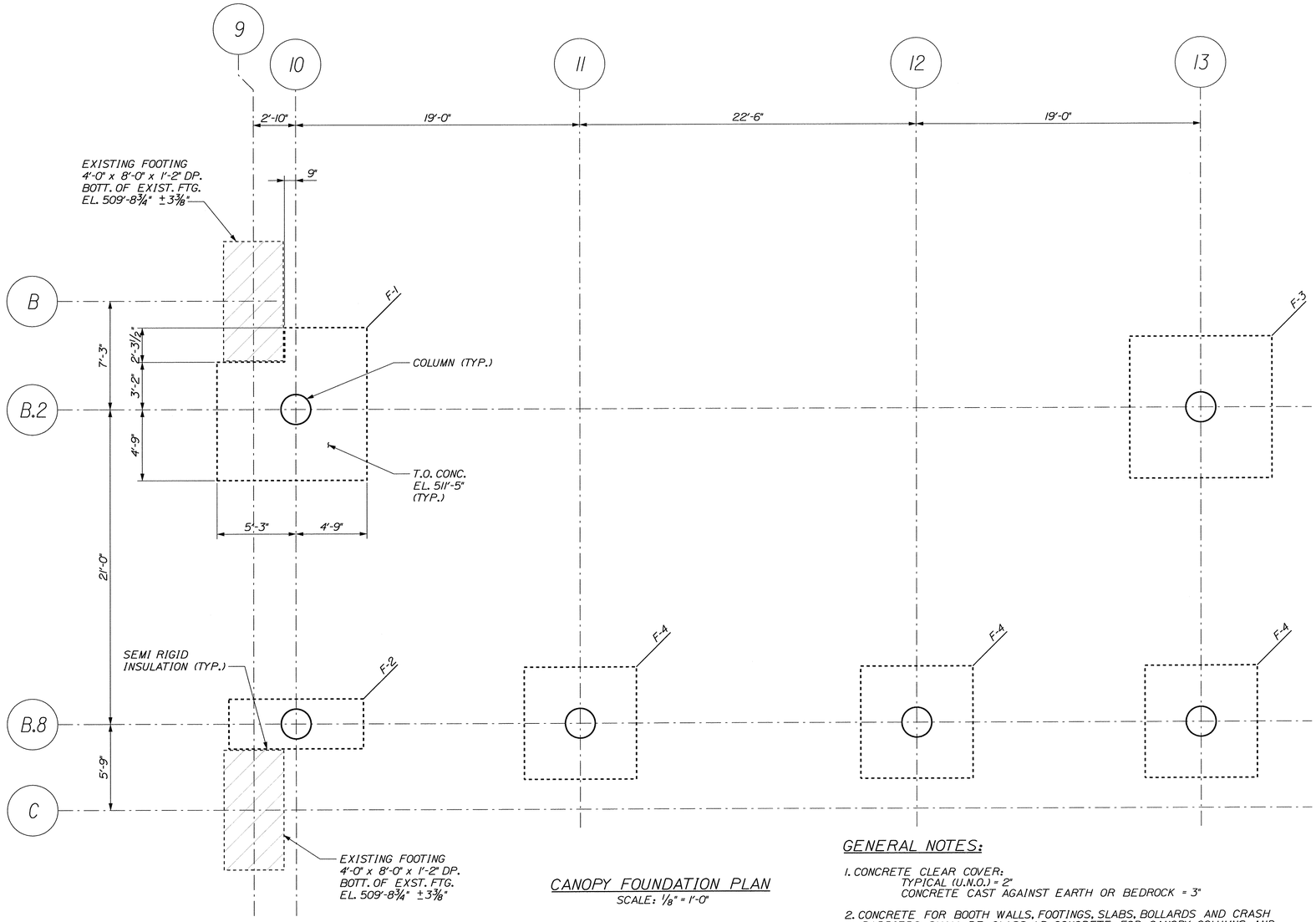

CANOPY FOUNDATION PLAN

SCALE: ⅛" = 1'-0"

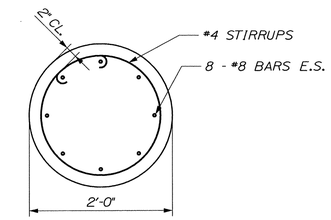

SECTION 'E'

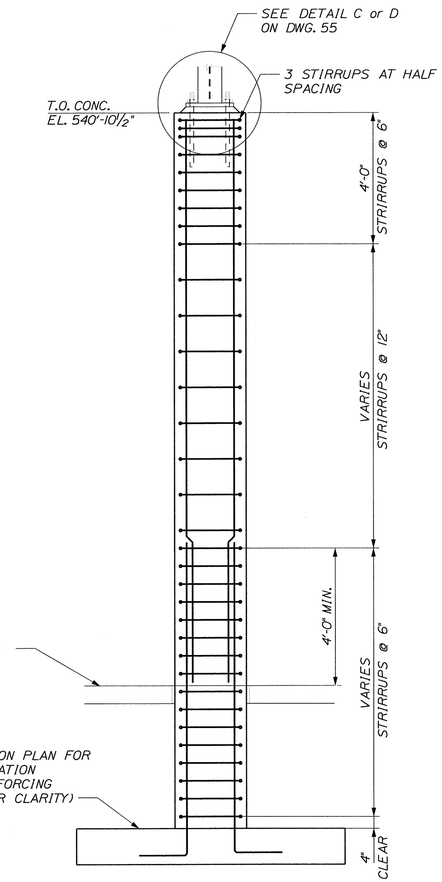

TYPICAL PILASTER DETAIL

½"=1'-0"

GENERAL NOTES:

1. CONCRETE CLEAR COVER:
   TYPICAL (U.N.O.) = 2"
   CONCRETE CAST AGAINST EARTH OR BEDROCK = 3"
2. CONCRETE FOR BOOTH WALLS, FOOTINGS, SLABS, BOLLARDS AND CRASH BARRIERS SHALL BE CLASS LP. CONCRETE FOR CANOPY COLUMNS AND FOOTINGS SHALL BE CLASS A.
3. ALLOWABLE GROSS SOIL BEARING CAPACITY = 18 psi
4. REINFORCING - 60 psi MIN. YIELD.
5. EXCAVATIONS TO BE APPROVED BY A QUALIFIED PROFESSIONAL GEOTECHNICAL ENGINEER PRIOR TO FOOTING FORMWORK CONSTRUCTION.
6. ALL REINFORCING BAR LAP SPLICES TO MEET REQUIREMENTS OF ACI 318
7. CONCRETE DESIGN IN ACCORDANCE WITH ACI 318 BUILDING CODE REQUIREMENTS FOR STRUCTURAL CONCRETE
8. CONFIRM ALL DIMENSIONS PRIOR TO CONSTRUCTION. REPORT ANY DISCREPECIES TO ENGINEER/ARCHITECT.
9. ALL DIMENSIONS ARE IN FEET AND INCHES
   ALL ELEVATIONS ARE IN FEET AND INCHES
10. ALL EXCAVATING AND BACKFILLING ACTIVITIES TO CONFORM WITH GEOTECHNICAL REPORT BY GEMTEC DATED MARCH 30, 2011 AND LETTER OUTLINING "ADDITIONAL CONSTRUCTION CONSIDERATIONS" DATED JUNE 08, 2011.

FOOTING SCHEDULE

MARK	SIZE	REINFORCING (EACH WAY)		ELEVATION T.O. FOOTING	REMARKS
		BOTTOM	TOP		
F-1	SEE PLAN x 1'-8" DEEP	12 - #8 E.W.	12 - #6 E.W.	511'-5"	
F-2	3'-4" x 9'-0" x 1'-4"	4 - #7 LONG	4 - #6 LONG	511'-5"	
		11 - #7 SHORT	11 - #7 SHORT		
F-3	9'-6" x 9'-6" x 1'-6"	10 - #8 E.W.	10 - #6 E.W.	511'-5"	
F-4	7'-6" x 7'-6" x 1'-2"	9 - #7 E.W.	9 - #7 E.W.	511'-5"	

STATE OF MAINE
DEPARTMENT OF TRANSPORTATION

BR-1004(210)X

PIN 10042.10

BRIDGE PLANS

BRIDGE NO. ____

STATE OF MAINE
BRIAN L. DORCAS
No. 9483
LICENSED
PROFESSIONAL ENGINEER

P.E. NUMBER

12-06-20
DATE

SIGNATURE

		BY	DATE
PROJ. MANAGER	B.L. DORCAS		
DESIGN-DETAILED	CMB	AEC	12.JUN.29
CHECKED-REVIEWED	MMH	RWS2	12.JUN.29
DESIGN2-DETAILED2			
DESIGN3-DETAILED3			
REVISIONS 1			
REVISIONS 2			
REVISIONS 3			
REVISIONS 4			
FIELD CHANGES			

INTERNATIONAL BRIDGE APPROACH
SAINT JOHN RIVER
FORT KENT AROOSTOOK

CANOPY FOUNDATION PLAN and DETAILS

SHEET NUMBER

17

OF 81

Filename: $file$ Division: $wkgroup$ Username: $user$ Date:$date$

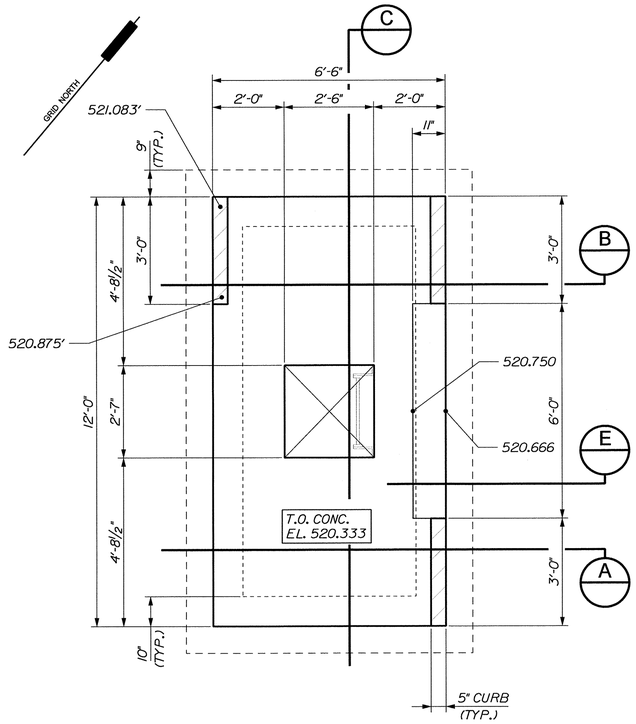

REGULAR BOOTH
FOUNDATION PLAN
SCALE: 1" = 1'-0"

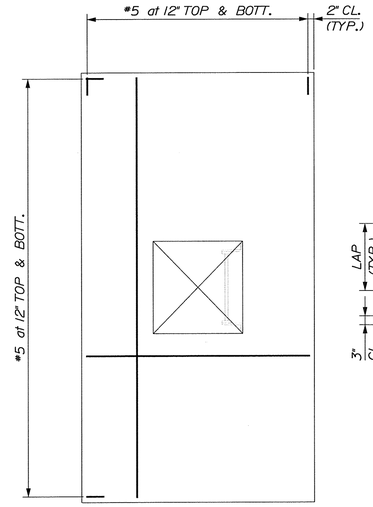

REGULAR BOOTH
SLAB REINFORCING PLAN
SCALE: 1" = 1'-0"

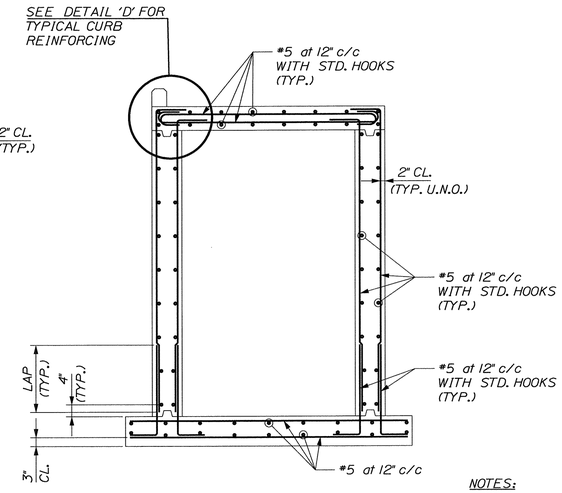

REGULAR BOOTH
TYPICAL FOUNDATION
REINFORCING
SCALE: 1" = 1'-0"

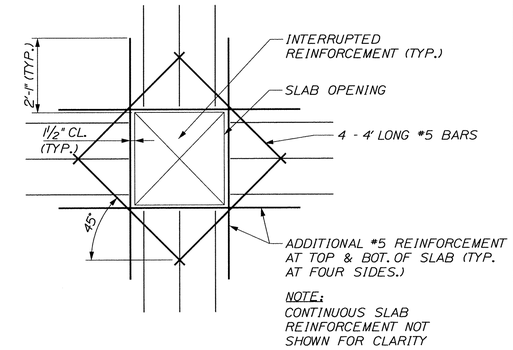

TYPICAL ADDITIONAL
REINFORCING AT
SLAB OPENING
SCALE: 1" = 1'-0"

NOTES:

1. BARS ARE AT EACH FACE OF WALL.
2. THE TYPICAL WALL REINFORCEMENT CAN START AT 12" FROM THE OUTER BARS.
3. REINFORCEMENT TO RUN LENGTH AND HEIGHT OF WALL.

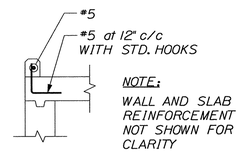

NOTE:
WALL AND SLAB REINFORCEMENT NOT SHOWN FOR CLARITY

DETAIL 'D'
SCALE: 1" = 1'-0"

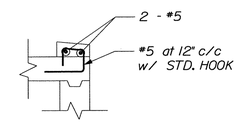

DETAIL 'E'
SCALE: ½" = 1'-0"

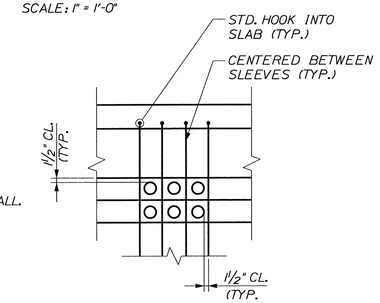

TYPICAL REINFORCING
AROUND CONDUIT
SCALE: 1" = 1'-0"

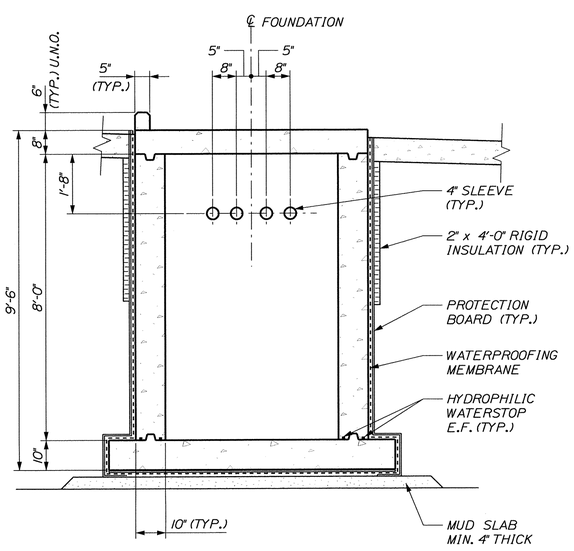

SECTION 'A'
SCALE: 1" = 1'-0"

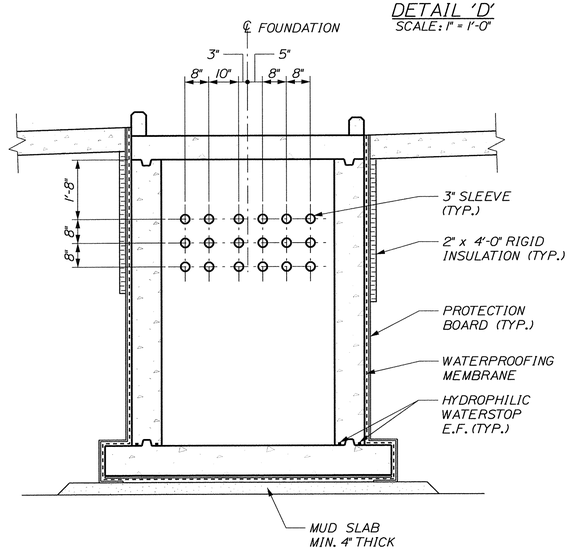

SECTION 'B'
SCALE: 1" = 1'-0"

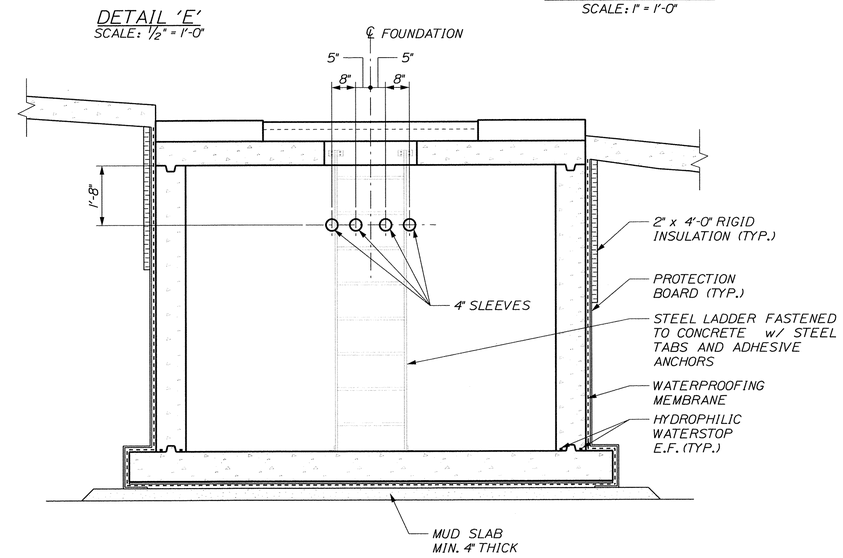

SECTION 'C'
SCALE: 1" = 1'-0"

NOTE:
SEE DWG. 17 FOR GENERAL NOTES.

STATE OF MAINE
DEPARTMENT OF TRANSPORTATION

BR-1004(210)X

PIN 10042.10

BRIDGE PLANS

BRIDGE NO. ____

STATE OF MAINE
BRIAN L. DORCAS
No.9463
LICENSED
PROFESSIONAL ENGINEER

SIGNATURE

P.E. NUMBER

12-06-20
DATE

PROJ. MANAGER	B.L. DORCAS	BY	DATE
DESIGN-DETAILED	PKC	AEC	12.JUN.29
CHECKED-REVIEWED	CMB	RWS2	12.JUN.29
DESIGN2-DETAILED2			
DESIGN3-DETAILED3			
REVISIONS 1			
REVISIONS 2			
REVISIONS 3			
REVISIONS 4			
FIELD CHANGES			

INTERNATIONAL BRIDGE APPROACH
SAINT JOHN RIVER
FORT KENT AROOSTOOK

REGULAR BOOTH FOUNDATION PLANS, SECTION and DETAILS

SHEET NUMBER
18
OF 81

Filename: $file$ Division: $wkgroup$ Username: $user$ Date:$date$

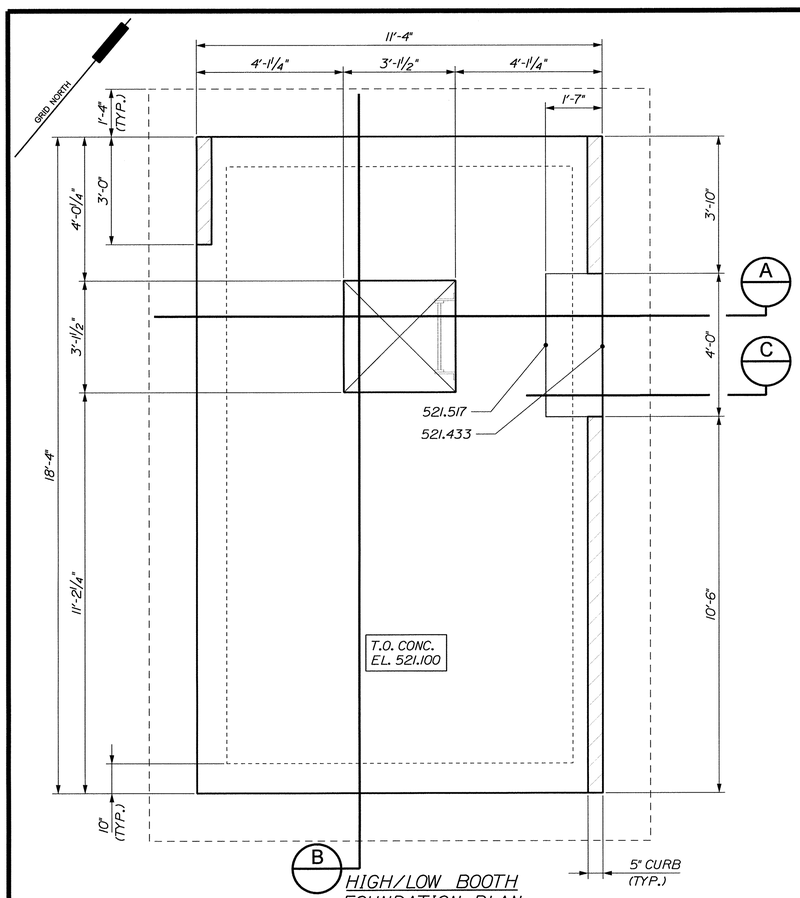

HIGH/LOW BOOTH FOUNDATION PLAN
SCALE: 1" = 1'-0"

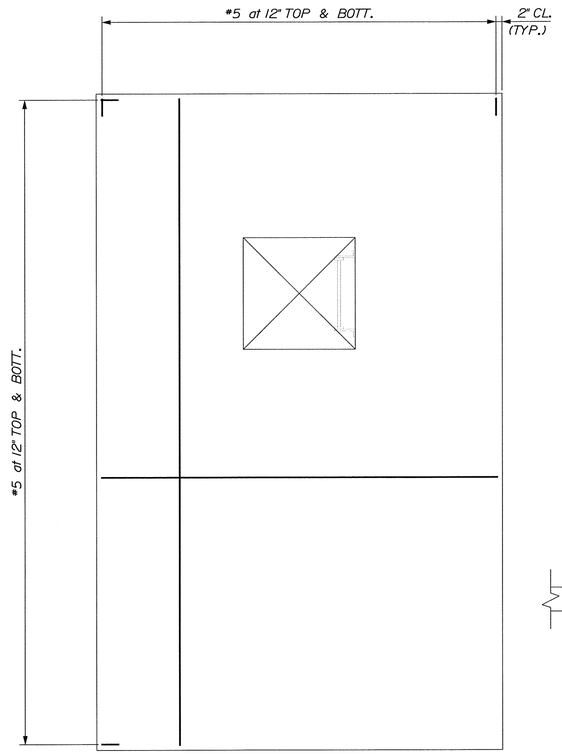

HIGH/LOW BOOTH SLAB FOUNDATION PLAN
SCALE: 1" = 1'-0"

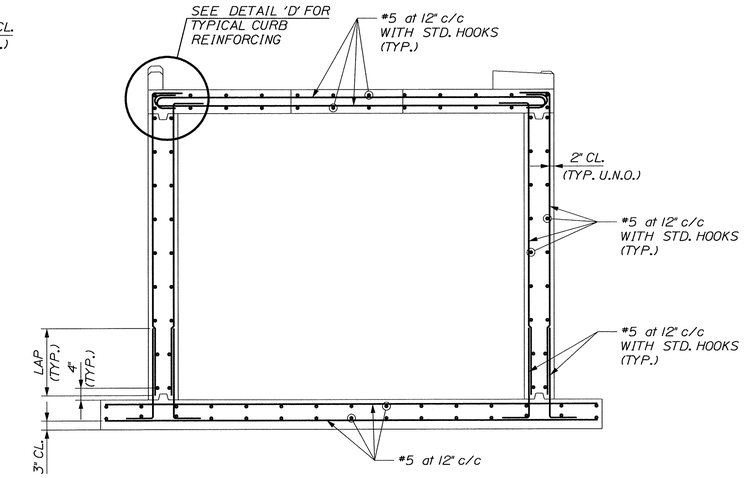

HIGH/LOW BOOTH TYPICAL FOUNDATION REINFORCING
SCALE: 1" = 1'-0"

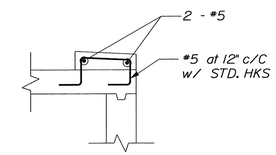

DETAIL 'C'
SCALE: ½" = 1'-0"

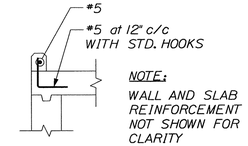

NOTE:
WALL AND SLAB REINFORCEMENT NOT SHOWN FOR CLARITY

DETAIL 'D'
SCALE: 1" = 1'-0"

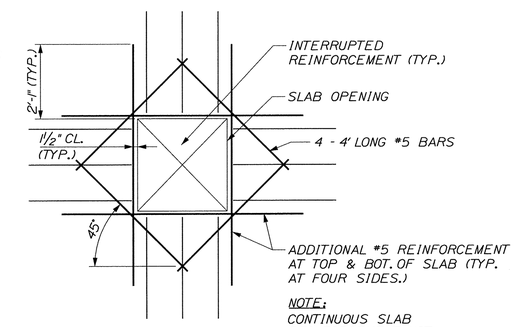

NOTE:
CONTINUOUS SLAB REINFORCEMENT NOT SHOWN FOR CLARITY

TYPICAL ADDITIONAL REINFORCING AT SLAB OPENING
SCALE: 1" = 1'-0"

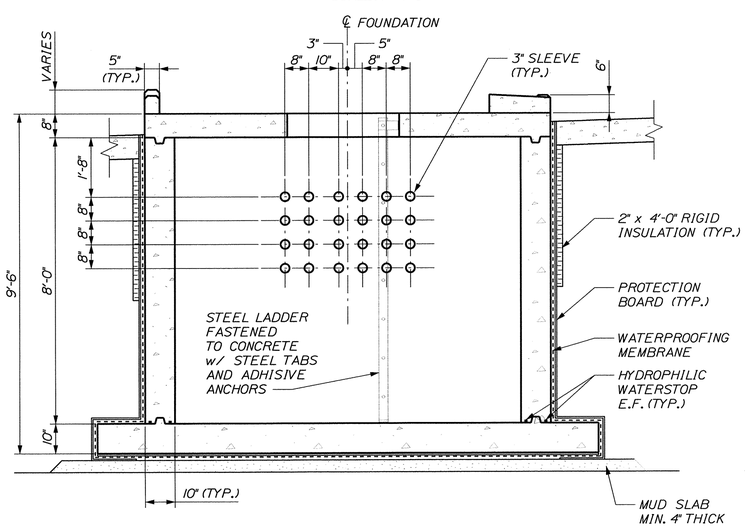

SECTION 'A'
SCALE: 1" = 1'-0"

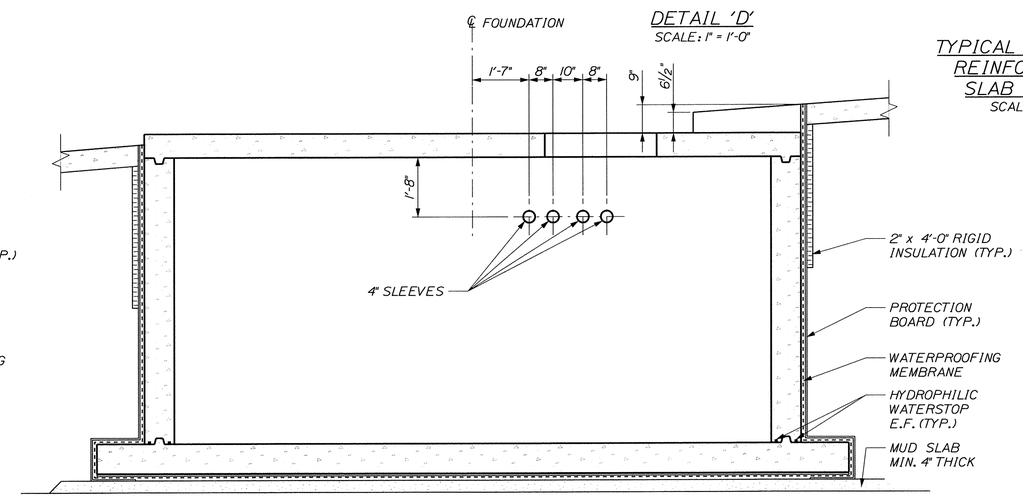

SECTION 'B'
SCALE: 1" = 1'-0"

NOTE:
SEE DWG. 17 FOR GENERAL NOTES

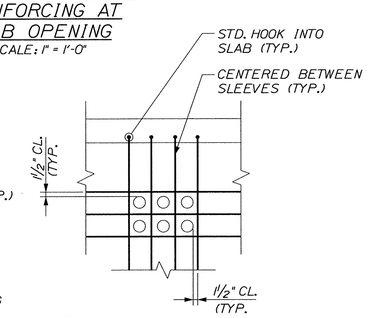

NOTES:
1. BARS ARE AT EACH FACE OF WALL.
2. THE TYPICAL WALL REINFORCEMENT CAN START AT 12" FROM THE OUTER BARS.
3. REINFORCEMENT TO RUN LENGTH AND HEIGHT OF WALL.

TYPICAL REINFORCING AROUND CONDUITS
SCALE: 1" = 1'-0"

STATE OF MAINE
DEPARTMENT OF TRANSPORTATION

BR-1004(210)X

PIN 10042.10

BRIDGE NO. ____

BRIDGE PLANS

STATE OF MAINE
BRIAN L. DORCAS
No. 9483
REGISTERED PROFESSIONAL ENGINEER

P.E. NUMBER
12-06-22
DATE

SIGNATURE

PROJ. MANAGER	B.L. DORCAS		
DESIGN-DETAILED	PXC	BY	DATE
CHECKED-REVIEWED	CMB	AEG	12-JUN-23
DESIGN2-DETAILED2		RWS2	12-JUN-23
DESIGN3-DETAILED3			
REVISIONS 1			
REVISIONS 2			
REVISIONS 3			
REVISIONS 4			
FIELD CHANGES			

INTERNATIONAL BRIDGE APPROACH
SAINT JOHN RIVER
FORT KENT AROOSTOOK

HIGH/LOW BOOTH FOUNDATION PLANS, SECTIONS and DETAILS

SHEET NUMBER
19
OF 81

Filename: $file$ Division: $wkgroup$ Username: $user$ Date: $date$

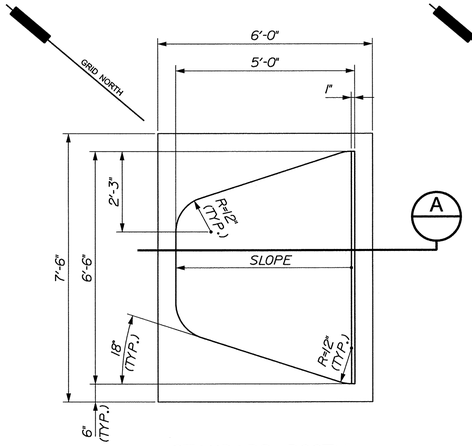

STANDARD BOOTH
CRASH BARRIER PLAN
SCALE: 1" = 1'-0"

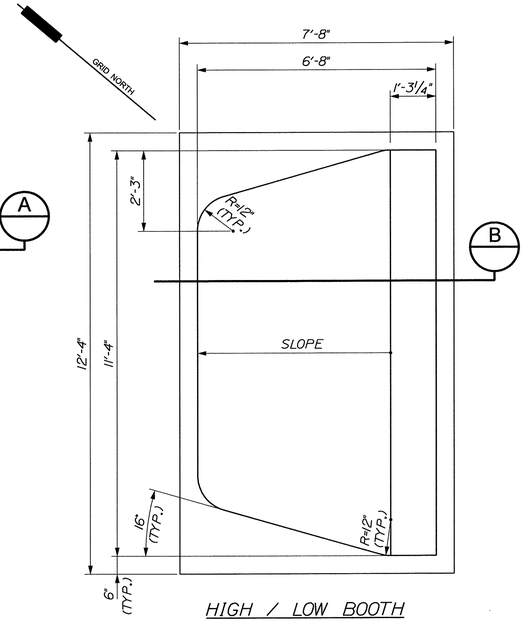

HIGH / LOW BOOTH
CRASH BARRIER PLAN
SCALE: 1" = 1'-0"

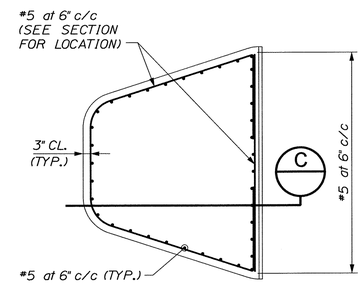

STANDARD BOOTH
CRASH BARRIER REINFORCING PLAN
SCALE: 1" = 1'-0"

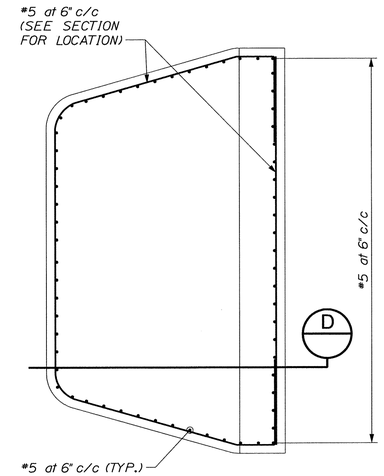

HIGH / LOW BOOTH
CRASH BARRIER REINFORCING PLAN
SCALE: 1" = 1'-0"

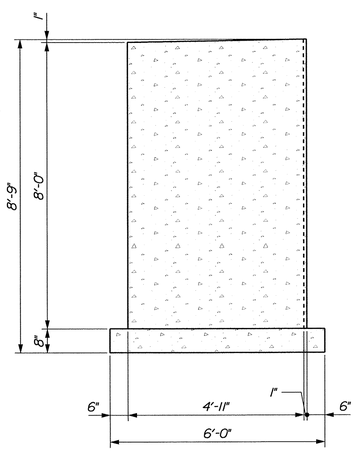

SECTION 'A'
SCALE: 1" = 1'-0"

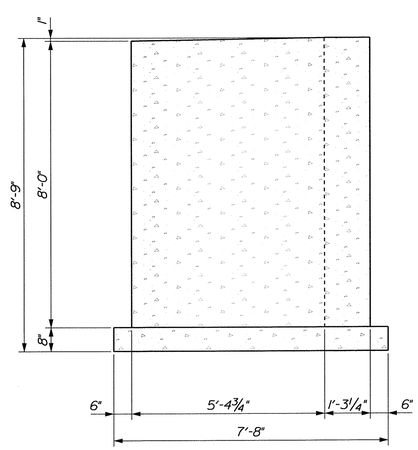

SECTION 'B'
SCALE: 1" = 1'-0"

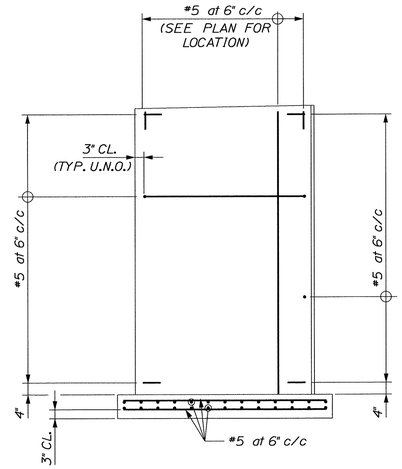

SECTION 'C'
SCALE: 1" = 1'-0"

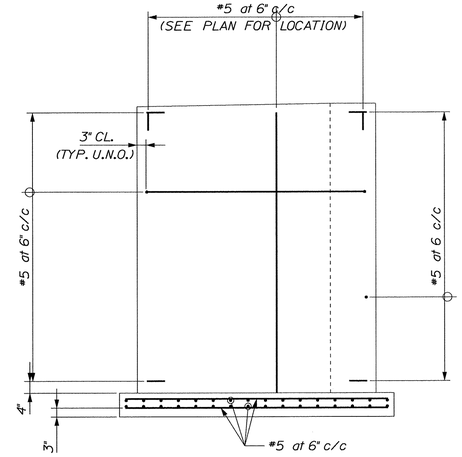

SECTION 'D'
SCALE: 1" = 1'-0"

NOTE:
SEE DWG. 17 FOR GENERAL NOTES

STATE OF MAINE
DEPARTMENT OF TRANSPORTATION

BR-1004(210)X

PIN 10042.10

BRIDGE PLANS

BRIDGE NO. ____

STATE OF MAINE
BRIAN L. DORCAS
No. 9483
LICENSED
PROFESSIONAL ENGINEER

P.E. NUMBER
12-06-20
DATE
SIGNATURE

		BY	DATE
PROJ. MANAGER	B.L. DORCAS		
DESIGN-DETAILED	PJC	AEC	12 JUN 29
CHECKED-REVIEWED	CMB	RWS2	12 JUN 29
DESIGN2-DETAILED2			
DESIGN3-DETAILED3			
REVISIONS 1			
REVISIONS 2			
REVISIONS 3			
REVISIONS 4			
FIELD CHANGES			

INTERNATIONAL BRIDGE APPROACH
SAINT JOHN RIVER
AROOSTOOK
FORT KENT

CRASH BARRIERS
PLANS, SECTIONS and DETAILS

SHEET NUMBER
20
OF 81

Filename: $file$ Division: $wkgroup$ Username: $user$ Date:$date$

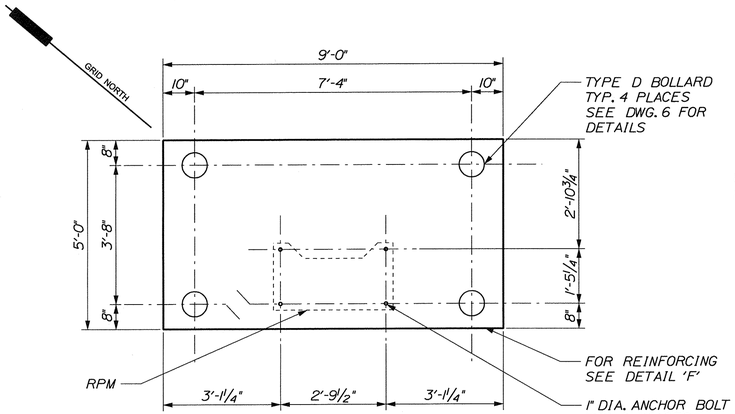

DETAIL A
SCALE: ½" = 1'-0"
22

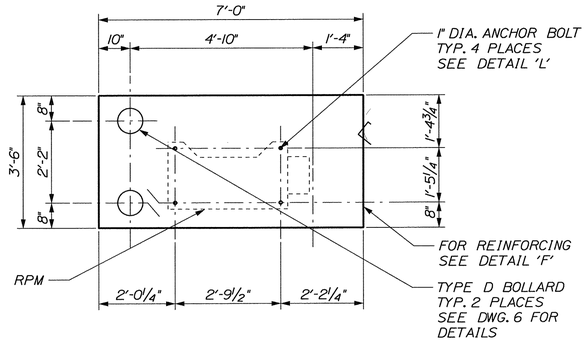

DETAIL D
SCALE: ½" = 1'-0"
22

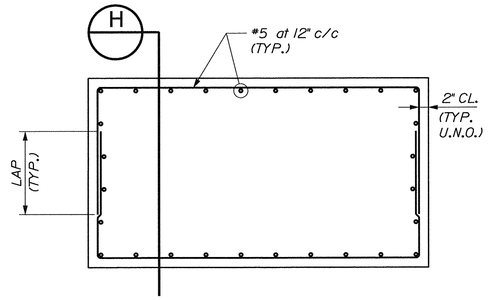

DETAIL 'F'
POV RPM FOUNDATION (2 REQ'D)
CARGO RPM FOUNDATION (2 REQ'D)
SCALE: ½" = 1'-0"

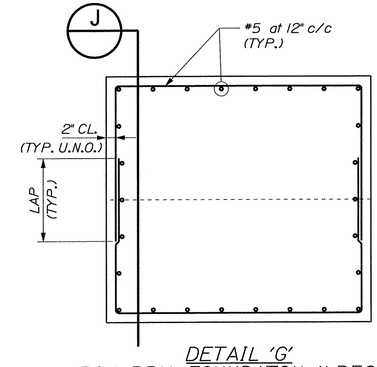

DETAIL 'G'
POV RPM FOUNDATON (1 REQ'D)
SCALE: ½" = 1'-0"

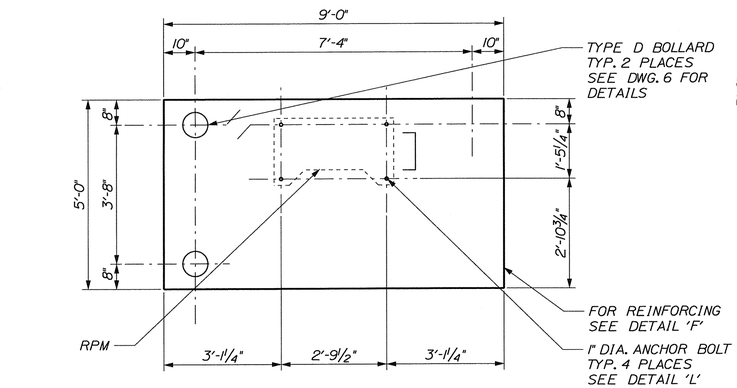

DETAIL B
SCALE: ½" = 1'-0"
22

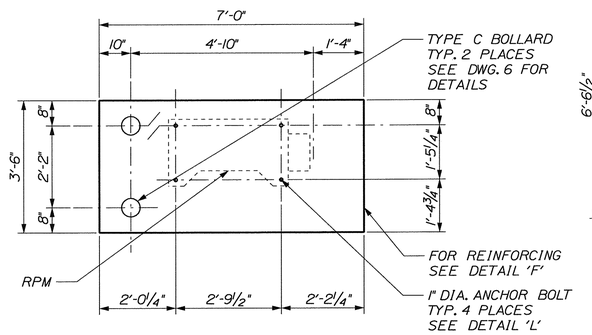

DETAIL E
SCALE: ½" = 1'-0"
22

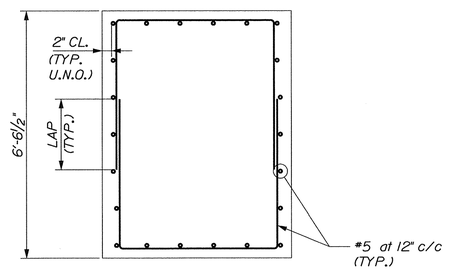

SECTION 'H'
SCALE: ½" = 1'-0"

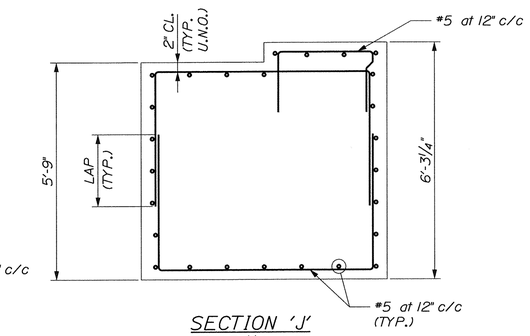

SECTION 'J'
SCALE: ½" = 1'-0"

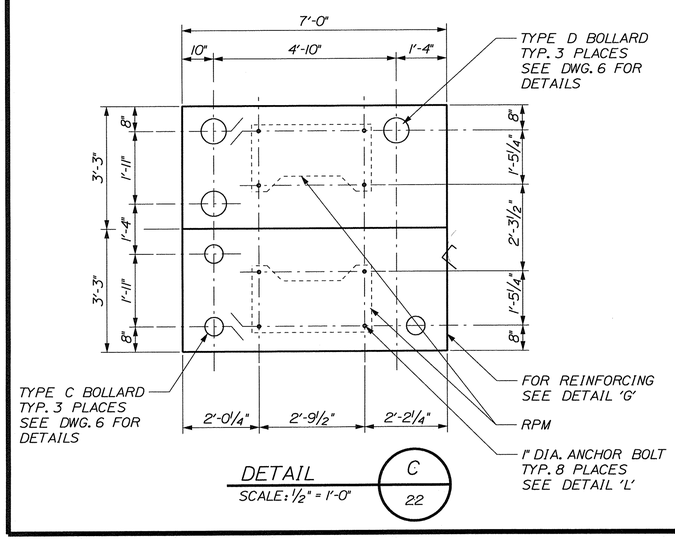

DETAIL C
SCALE: ½" = 1'-0"
22

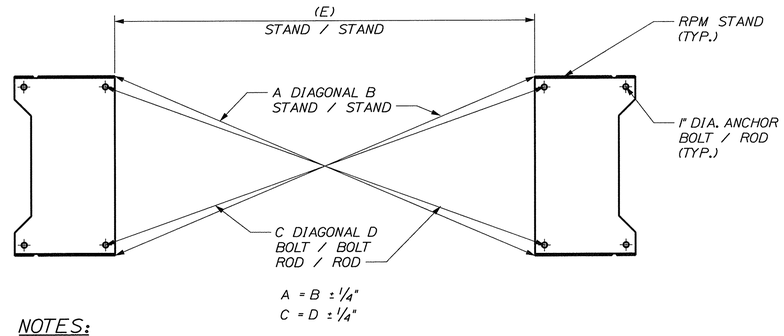

NOTES:

1. RPM STANDS SHALL BE PLUMB.
2. SEE RPM CRITICAL DIMENSIONS TABULATION BELOW.

POV / CARGO RPM CRITICAL DIMENSIONS			
LANE	DIMENSION A / B	DIMENSION C / D	DIMENSION (E)
PRIMARY POV AND POV/CARGO RPM	12'-4 15/16"	12'-7 ¾"	(12'-0")
PRIMARY CARGO RPM	14'-8 ⅛"	14'-11 3/16"	(14'-4")

DETAIL 'K'
RPM STAND ANCHOR BOLT / ROD - ALIGNMENT
SCALE: ¾" = 1'-0"

NOTE:

SEE DWG. 17 FOR GENERAL NOTES

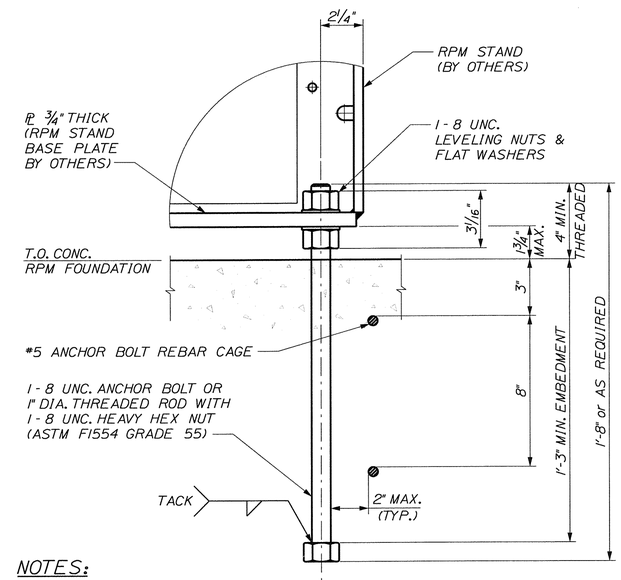

NOTES:

1. TIGHTEN NUTS HOLDING STAND TO ANCHOR BOLTS TO 275 FT. LBS. AFTER 48 HOURS TORQUE THE NUTS TO 302 FT. LBS.
2. BOLT, WASHERS AND NUTS ARE CONTRACTOR PROVIDED AND INSTALLED.

DETAIL 'L'
EXCAVATED FOUNDATION
RPM STAND ANCHORING & LEVELING
3" = 1'-0"

STATE OF MAINE
DEPARTMENT OF TRANSPORTATION

BR-1004(210)X

PIN 10042.10

BRIDGE PLANS

BRIDGE NO. ____

STATE OF MAINE · BRIAN L. DORCAS · No. 9463 · PROFESSIONAL ENGINEER

		BY	DATE
PROJ. MANAGER	B.L. DORCAS		
DESIGN-DETAILED		AEG	12.JUN.29
CHECKED-REVIEWED		RWS2	12.JUN.29
DESIGN2-DETAILED2			
DESIGN3-DETAILED3			
REVISIONS 1			
REVISIONS 2			
REVISIONS 3			
REVISIONS 4			
FIELD CHANGES			

SIGNATURE

P.E. NUMBER 13-07-12

DATE

INTERNATIONAL BRIDGE APPROACH
SAINT JOHN RIVER
FORT KENT AROOSTOOK

RPM FOUNDATIONS
PLANS, SECTIONS and DETAILS

SHEET NUMBER
21
OF 81

Date:$date$
Username: $user$
Division: $wkgroup$
Filename: $file$

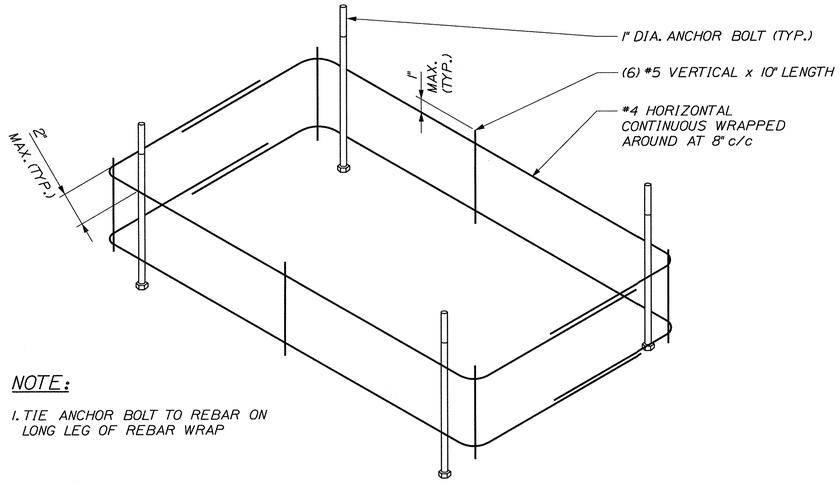

NOTE:

1. TIE ANCHOR BOLT TO REBAR ON LONG LEG OF REBAR WRAP

(EXCAVATED FOUNDATION)
RPM STAND ANCHOR BOLT - REBAR CAGE

NOT TO SCALE

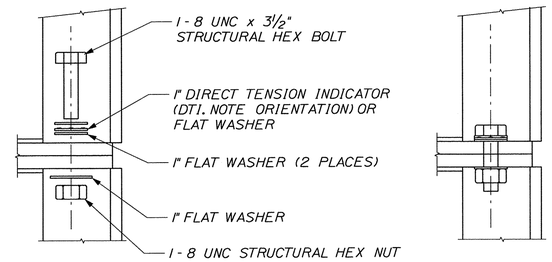

NOTES:

1. BOLT, WASHERS, NUT AND DTI ARE GFE CI.

2. TIGHTEN THE NUTS IN A STAR PATTERN TO A SNUG-TIGHT CONDITION (FULL FORCE MANUALLY TIGHTENED WITH A 16" LEVER ARM). MARK THE NUT ON ONE FLAT WITH A CORRESPONDING MARK ON THE BASE PLATE FOR EACH BOLT LOCATION. HOLDING THE BOLT FROM ROTATING, TURN THE NUTS IN INCREMENTS (1/8 TURN) IN A STAR PATTERN (AT LEAST TWO FULL TIGHTENING CYCLES) UNTIL EACH NUT HAS BEEN ROTATED 1/4 TURN. AFTER TIGHTENING THE NUT ROTATION SHOULD BE VERIFIED.

CONNECTING UPPER AND LOWER SHROUDS

SCALE: 3" = 1'-0" (4 PER STAND)

STATE OF MAINE
DEPARTMENT OF TRANSPORTATION

BR-1004(210)X

PIN 10042.10

BRIDGE PLANS

BRIDGE NO. ____

STATE OF MAINE
BRIAN L. DORCAS
No.9463
PROFESSIONAL ENGINEER

P.E. NUMBER

13-07-12
DATE

SIGNATURE

		BY	DATE
PROJ. MANAGER	B.L. DORCAS		
DESIGN-DETAILED		AEG	13.MAY.23
CHECKED-REVIEWED		RWS2	13.MAY.23
DESIGN2-DETAILED2			
DESIGN3-DETAILED3			
REVISIONS 1			
REVISIONS 2			
REVISIONS 3			
REVISIONS 4			
FIELD CHANGES			

INTERNATIONAL BRIDGE APPROACH
SAINT JOHN RIVER
FORT KENT AROOSTOOK

POV AND CARGO RPM
STAND DETAILS

SHEET NUMBER

21a

OF 81

Filename: $file$ Division: $wkgroup$ Username: $user$ Date:$date$

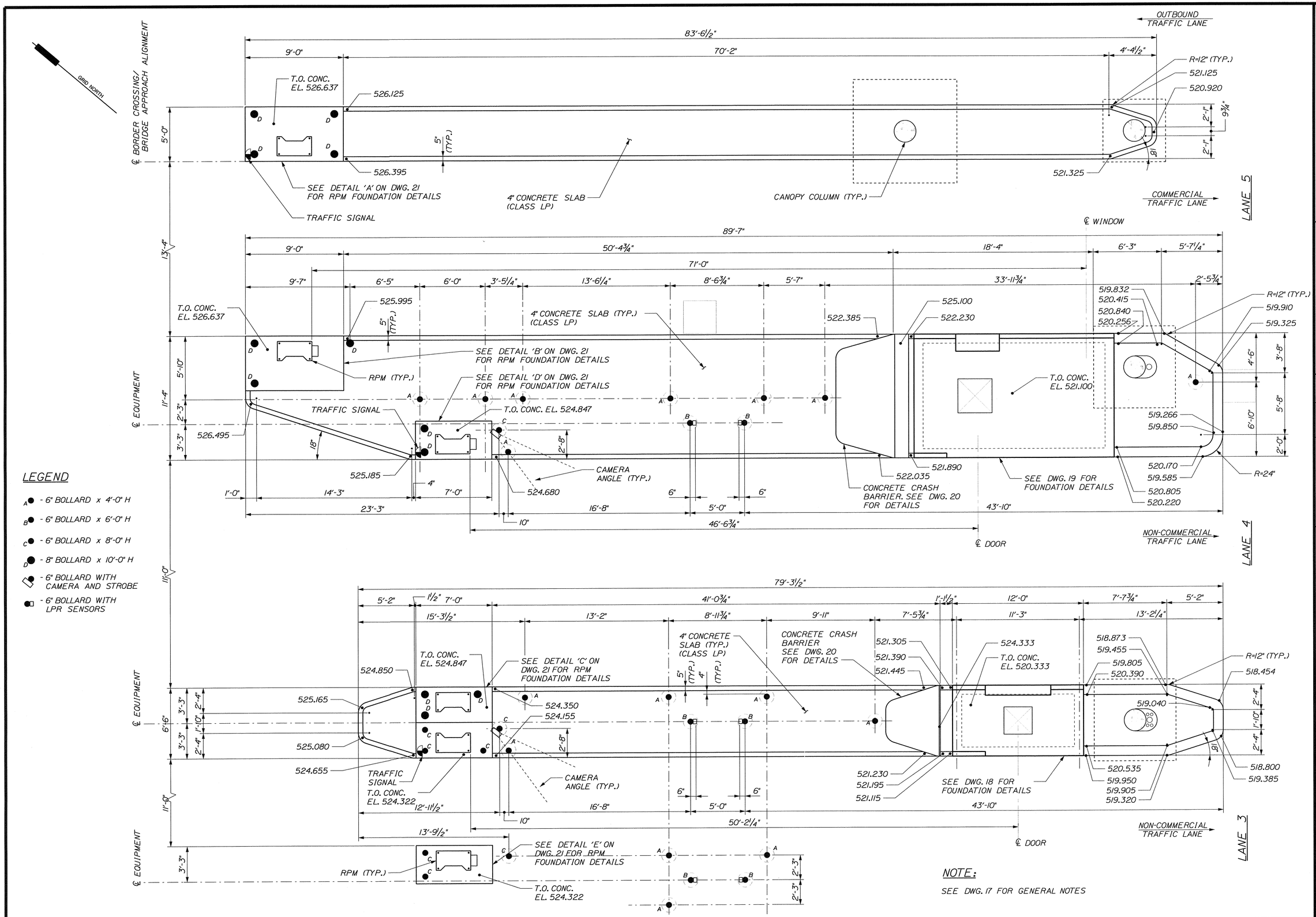

LEGEND

- A ● - 6" BOLLARD x 4'-0" H
- B ● - 6" BOLLARD x 6'-0" H
- C ● - 6" BOLLARD x 8'-0" H
- D ● - 8" BOLLARD x 10'-0" H
- ◇● - 6" BOLLARD WITH CAMERA AND STROBE
- ■ - 6" BOLLARD WITH LPR SENSORS

NOTE:

SEE DWG. 17 FOR GENERAL NOTES

STATE OF MAINE
DEPARTMENT OF TRANSPORTATION

BR-1004(210)X

PIN 10042.10

BRIDGE NO. ____

BRIDGE PLANS

STATE OF MAINE · BRIAN L. DORCAS · No.9493 · REGISTERED PROFESSIONAL ENGINEER

	BY	DATE
PROJ. MANAGER	B.L. DORCAS	
DESIGN-DETAILED	AEC	12.JUN.29
CHECKED-REVIEWED	RWS2	12.JUN.29
DESIGN2-DETAILED2		
DESIGN3-DETAILED3		
REVISIONS 1		
REVISIONS 2		
REVISIONS 3		
REVISIONS 4		
FIELD CHANGES		

SIGNATURE

P.E. NUMBER

13-07-12
DATE

INTERNATIONAL BRIDGE APPROACH
SAINT JOHN RIVER
FORT KENT AROOSTOOK

ISLAND CONCRETE PLANS

SHEET NUMBER

22

OF 81

Filename: $file$ Division: $wkgroup$ Username: $user$ Date:$date$

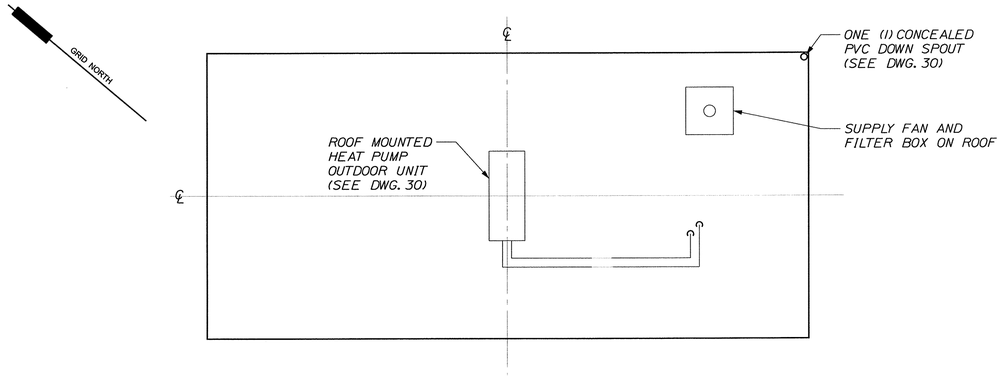

HIGH/LOW BOOTH: ROOF PLAN
SCALE: 1/2" = 1'-0"

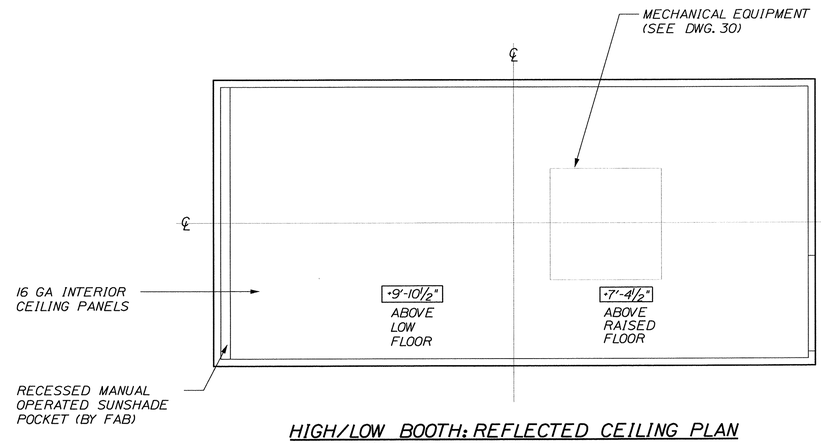

HIGH/LOW BOOTH: REFLECTED CEILING PLAN
SCALE: 1/2" = 1'-0"

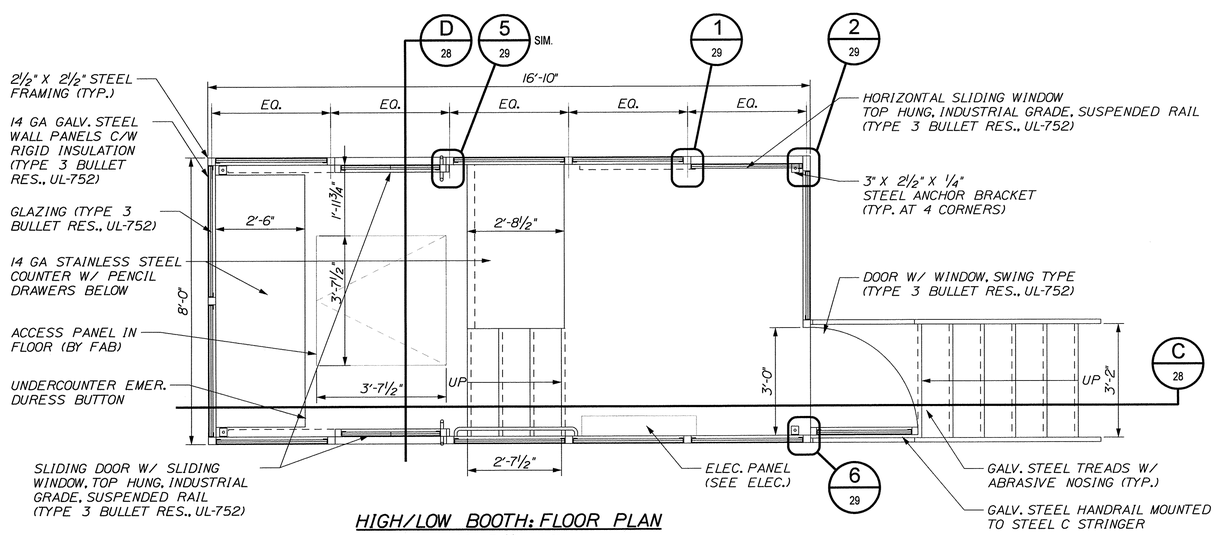

HIGH/LOW BOOTH: FLOOR PLAN
SCALE: 1/2" = 1'-0"

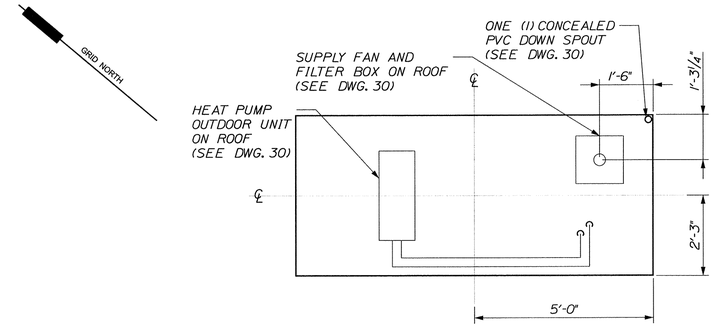

STANDARD BOOTH: ROOF PLAN
SCALE: 1/2" = 1'-0"

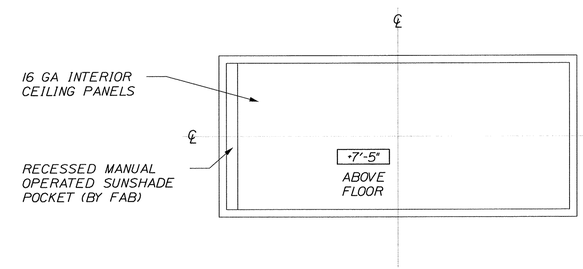

STANDARD BOOTH: REFLECTED CEILING PLAN
SCALE: 1/2" = 1'-0"

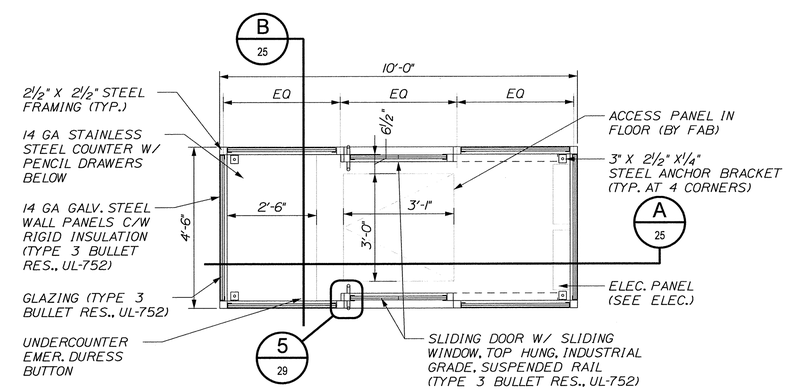

STANDARD BOOTH: FLOOR PLAN
SCALE: 1/2" = 1'-0"

STATE OF MAINE
DEPARTMENT OF TRANSPORTATION

BR-1004(210)X

PIN 10042.10

BRIDGE PLANS

BRIDGE NO. ____

STATE OF MAINE BRIAN L. DORCAS No.9463 LICENSED PROFESSIONAL ENGINEER

P.E. NUMBER

12-06-29
DATE

SIGNATURE

PROJ. MANAGER	B.L. DORCAS	BY	DATE
DESIGN-DETAILED	SJS	AM	12.JUN.29
CHECKED-REVIEWED	SDS	RWS2	12.JUN.29
DESIGN2-DETAILED2			
DESIGN3-DETAILED3			
REVISIONS 1			
REVISIONS 2			
REVISIONS 3			
REVISIONS 4			
FIELD CHANGES			

INTERNATIONAL BRIDGE APPROACH
SAINT JOHN RIVER
FORT KENT AROOSTOOK

STANDARD and HIGH/LOW BOOTH PLANS

SHEET NUMBER
23
OF 81

Filename: $file$ Division: $wkgroup$ Username: $user$ Date:$date$

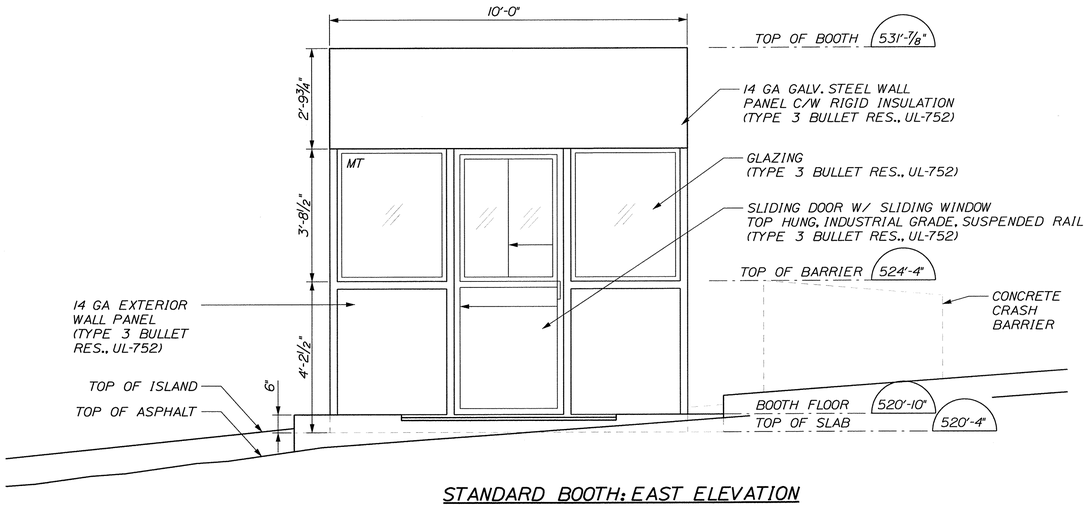

STANDARD BOOTH: EAST ELEVATION

SCALE: ½" = 1'-0"

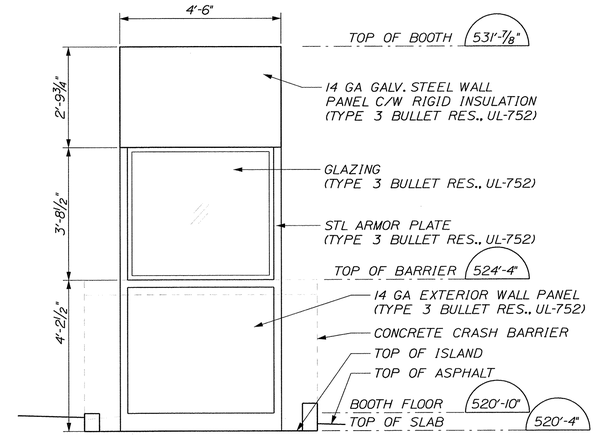

STANDARD BOOTH: NORTH ELEVATION

SCALE: ½" = 1'-0"

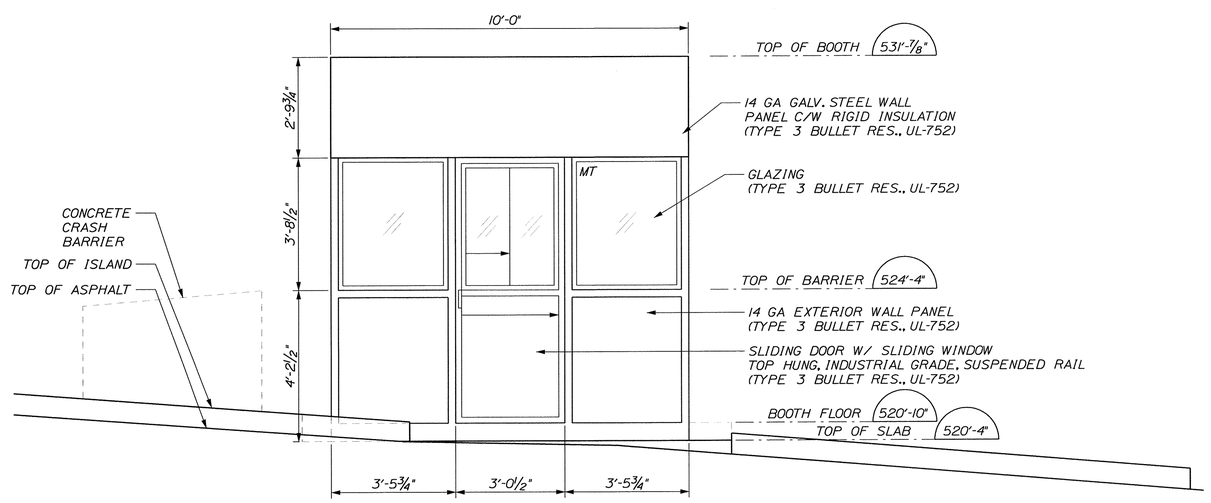

STANDARD BOOTH: WEST ELEVATION

SCALE: ½" = 1'-0"

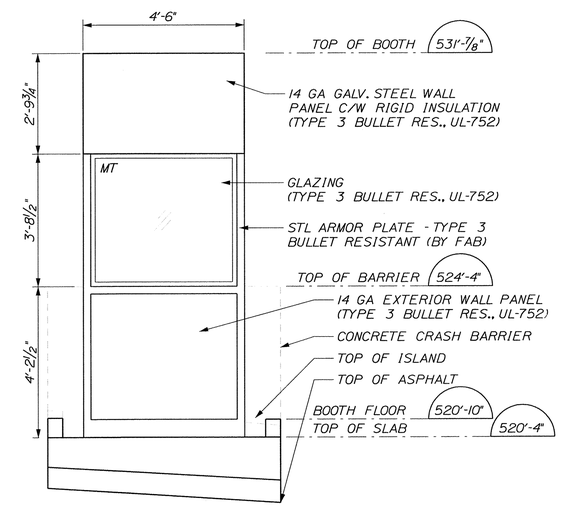

STANDARD BOOTH: SOUTH ELEVATION

SCALE: ½" = 1'-0"

MT = ONE WAY MIRROR TINTED GLAZING

STATE OF MAINE
DEPARTMENT OF TRANSPORTATION

BR-1004(210)X

PIN 10042.10

BRIDGE PLANS

BRIDGE NO. ____

STATE OF MAINE · BRIAN L. DORCAS · No.9483 · 12/06/2012 · PROFESSIONAL ENGINEER

P.E. NUMBER

12-06-20

SIGNATURE DATE

		BY	DATE
PROJ. MANAGER	B.L. DORCAS		
DESIGN-DETAILED	SJS	AM	12 JUN 29
CHECKED-REVIEWED	SJS	RWS2	12 JUN 29
DESIGN2-DETAILED2			
DESIGN3-DETAILED3			
REVISIONS 1			
REVISIONS 2			
REVISIONS 3			
REVISIONS 4			
FIELD CHANGES			

INTERNATIONAL BRIDGE APPROACH
SAINT JOHN RIVER
FORT KENT AROOSTOOK

STANDARD BOOTH ELEVATIONS

SHEET NUMBER

24

OF 81

Filename: $file$ Division: $wkgroup$ Username: $user$ Date: $date$

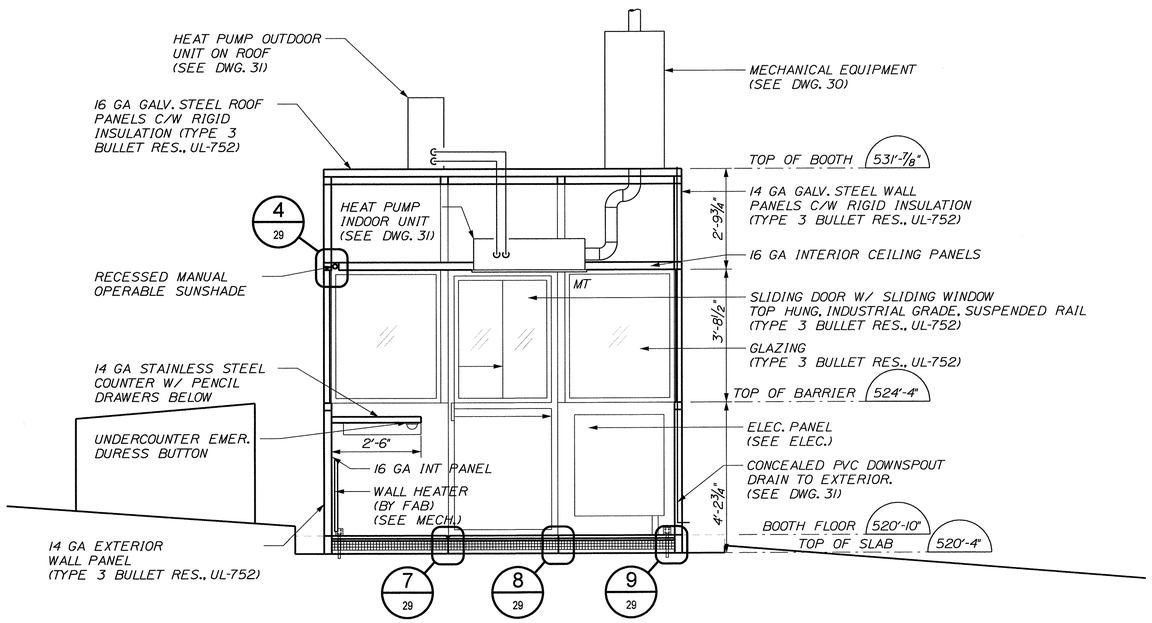

A 23 STANDARD BOOTH: SECTION

SCALE: ½" = 1'-0"

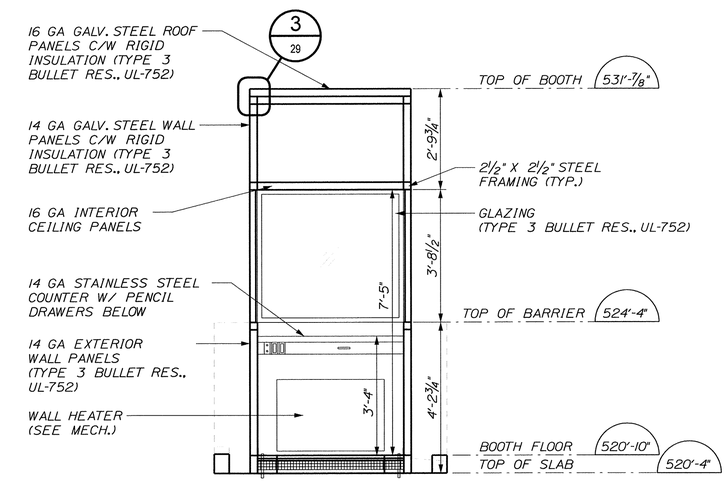

B 23 STANDARD BOOTH: SECTION

SCALE: ½" = 1'-0"

STATE OF MAINE
DEPARTMENT OF TRANSPORTATION

BR-1004(210)X

PIN 10042.10

BRIDGE PLANS

BRIDGE NO. ____

STATE OF MAINE · BRIAN L. DORCAS · No.9463 · LICENSED · PROFESSIONAL ENGINEER

P.E. NUMBER

12-06-20

DATE

SIGNATURE

		BY	DATE
PROJ. MANAGER	B.L. DORCAS		
DESIGN-DETAILED	SDS	AM	12 JUN 29
CHECKED-REVIEWED	SDS	RWS2	12 JUN 29
DESIGN2-DETAILED2	SDS		
DESIGN3-DETAILED3			
REVISIONS 1			
REVISIONS 2			
REVISIONS 3			
REVISIONS 4			
FIELD CHANGES			

INTERNATIONAL BRIDGE APPROACH
SAINT JOHN RIVER
FORT KENT AROOSTOOK

STANDARD BOOTH SECTIONS

SHEET NUMBER

25

OF 81

Filename: $file$ Division: $wkgroup$ Username: $user$ Date:$date$

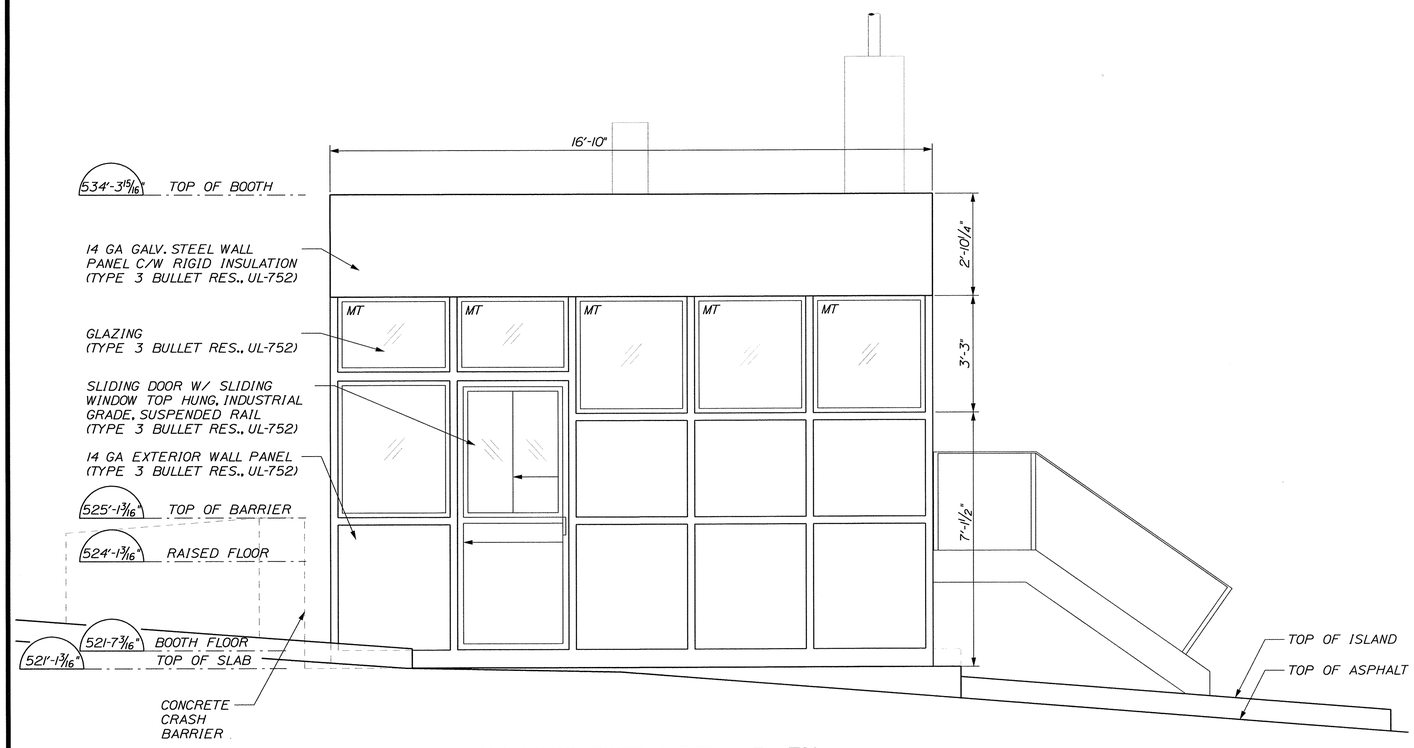

HIGH/LOW BOOTH: WEST ELEVATION

SCALE: 1/2" = 1'-0"

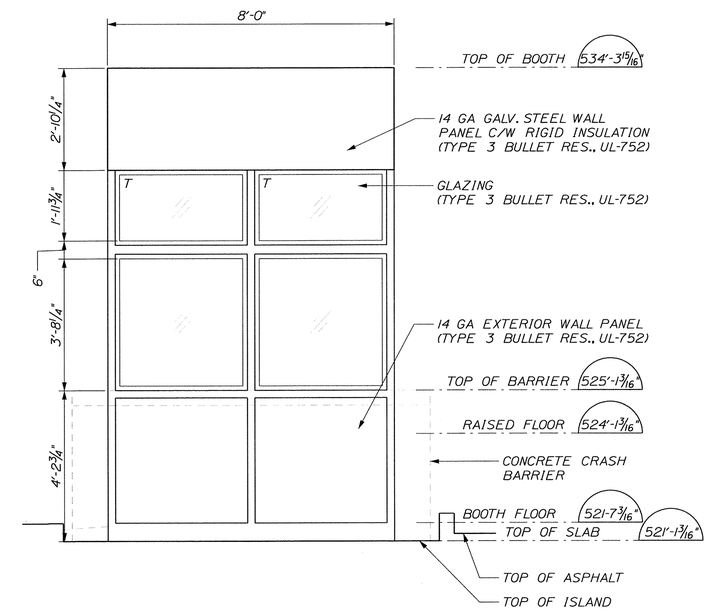

HIGH/LOW BOOTH: NORTH ELEVATION

SCALE: 1/2" = 1'-0"

MT = ONE WAY MIRROR TINTED GLAZING
T = TINTED GLAZING

STATE OF MAINE
DEPARTMENT OF TRANSPORTATION

BR-1004(210)X

PIN 10042.10

BRIDGE NO. ____

BRIDGE PLANS

STATE OF MAINE
BRIAN L. DORCAS
No.9463
LICENSED
PROFESSIONAL ENGINEER

P.E. NUMBER

12-06-20
DATE

SIGNATURE

		BY	DATE
PROJ. MANAGER	B.L. DORCAS		
DESIGN-DETAILED	SDS	AM	12 JUN 29
CHECKED-REVIEWED	SDS	RWS2	12 JUN 29
DESIGN2-DETAILED2			
DESIGN3-DETAILED3			
REVISIONS 1			
REVISIONS 2			
REVISIONS 3			
REVISIONS 4			
FIELD CHANGES			

INTERNATIONAL BRIDGE APPROACH
SAINT JOHN RIVER
FORT KENT AROOSTOOK

HIGH/LOW BOOTH ELEVATIONS

SHEET NUMBER

26

OF 81

Filename: $file$ Division: $wkgroup$ Username: $user$ Date:$date$

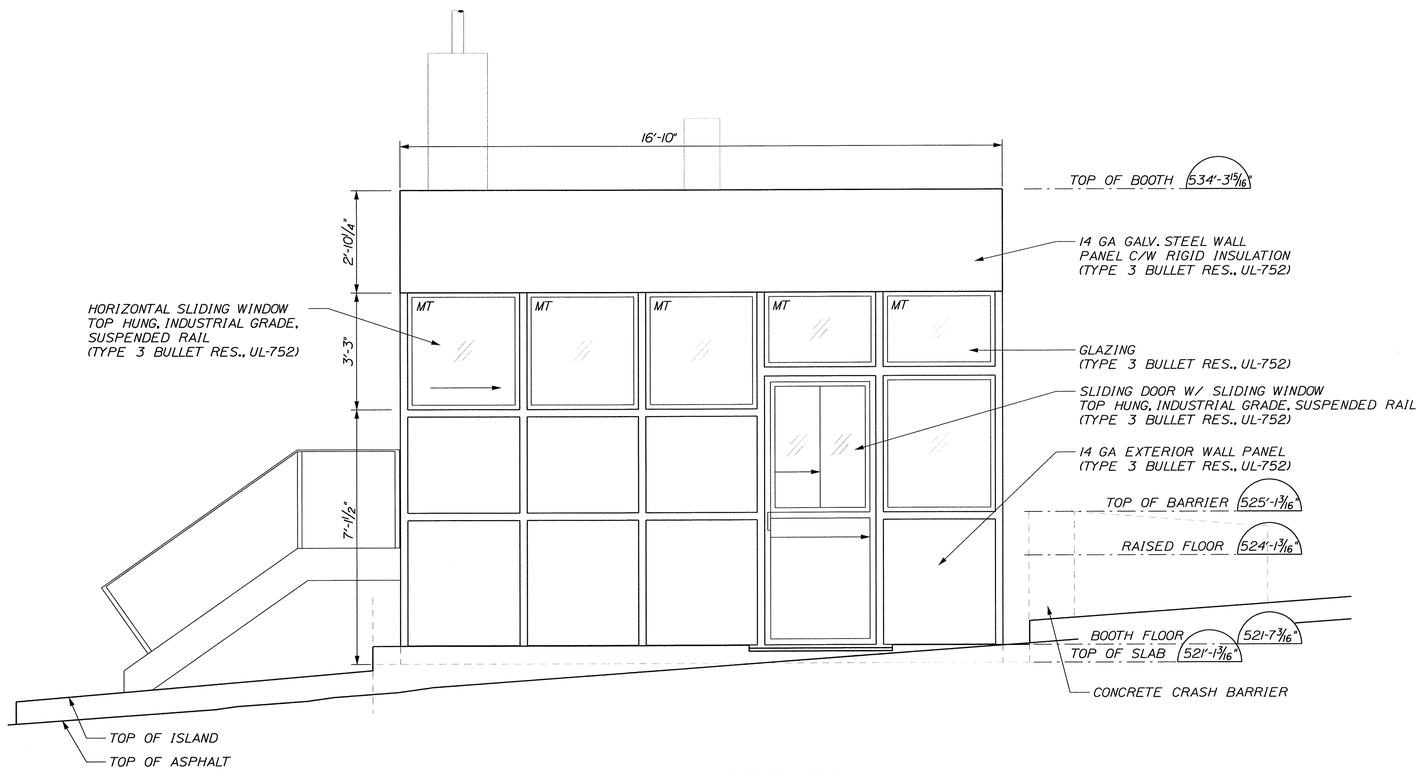

HIGH/LOW BOOTH: EAST ELEVATION

SCALE: 1/2" = 1'-0"

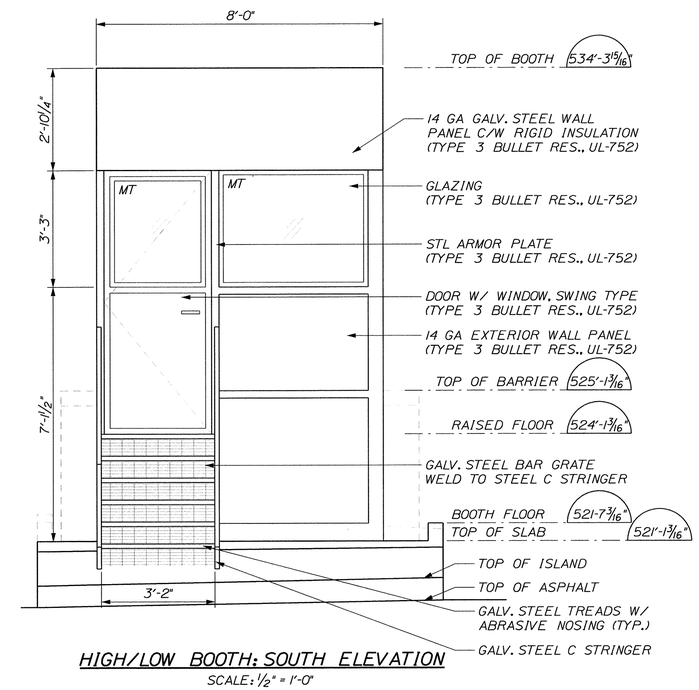

HIGH/LOW BOOTH: SOUTH ELEVATION

SCALE: 1/2" = 1'-0"

MT = ONE WAY MIRROR TINTED GLAZING
T = TINTED GLAZING

STATE OF MAINE
DEPARTMENT OF TRANSPORTATION

BR-1004(210)X

PIN 10042.10

BRIDGE NO. _____

BRIDGE PLANS

STATE OF MAINE
BRIAN L. DORCAS
No.9493
LICENSED
PROFESSIONAL ENGINEER

P.E. NUMBER

12-06-29
DATE

SIGNATURE

		BY	DATE
PROJ. MANAGER	B.L. DORCAS		
DESIGN-DETAILED	SDS	AM	12JUN29
CHECKED-REVIEWED	SDS	RWS2	12JUN29
DESIGN2-DETAILED2			
DESIGN3-DETAILED3			
REVISIONS 1			
REVISIONS 2			
REVISIONS 3			
REVISIONS 4			
FIELD CHANGES			

INTERNATIONAL BRIDGE APPROACH
SAINT JOHN RIVER
FORT KENT AROOSTOOK

HIGH/LOW BOOTH ELEVATIONS

SHEET NUMBER

27

OF 81

Filename: $file$ Division: $wkgroup$ Username: $user$ Date:$date$

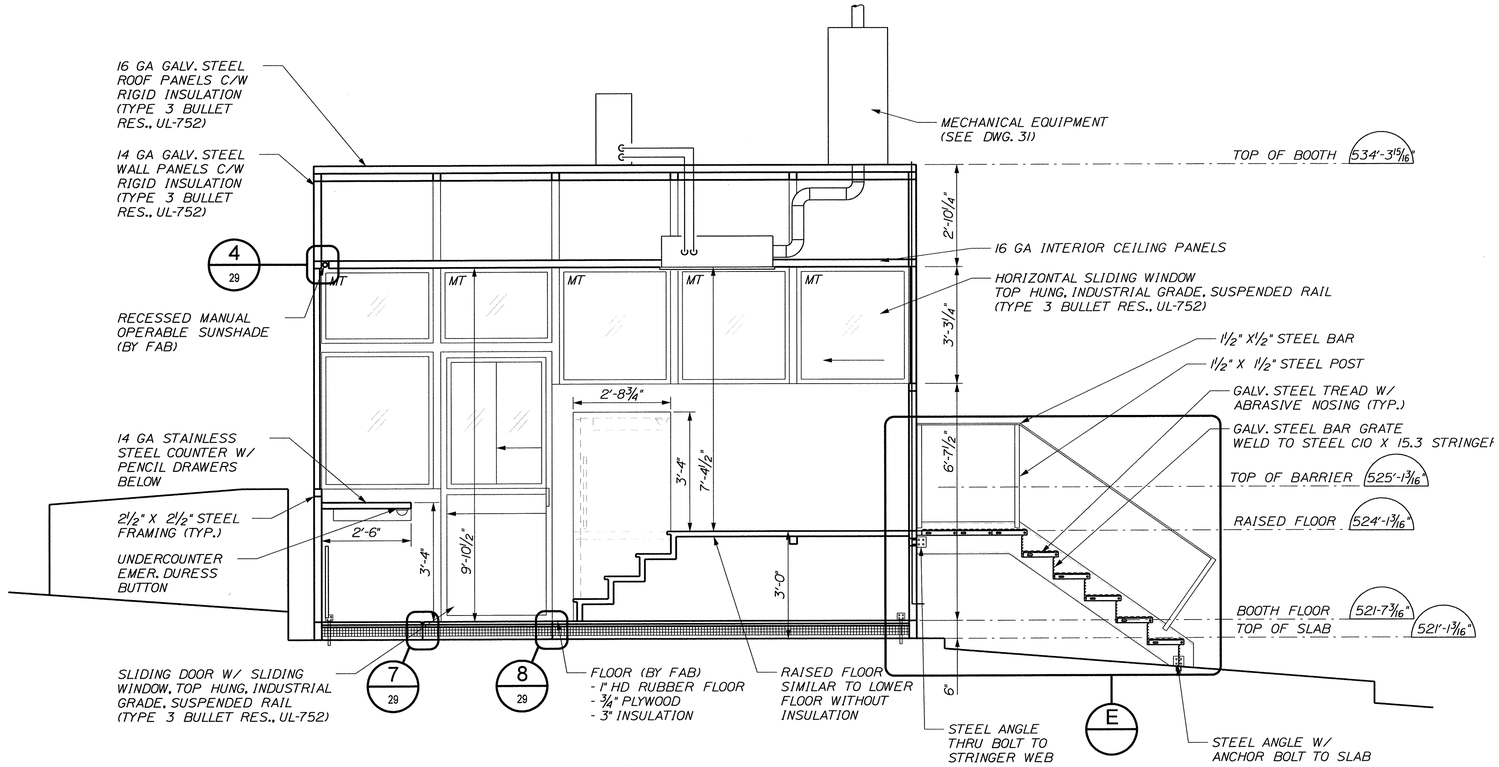

C 23 HIGH/LOW BOOTH: SECTION

SCALE: ½" = 1'-0"

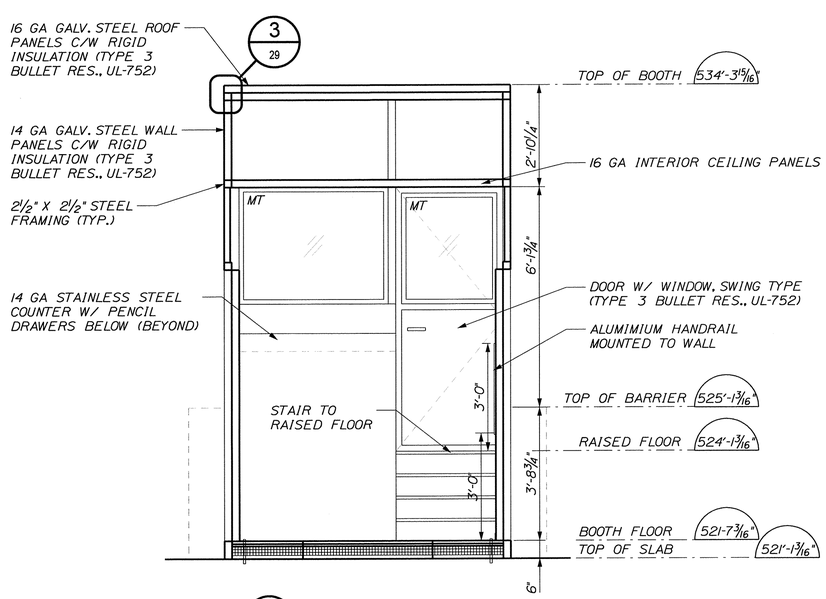

D 23 HIGH/LOW BOOTH: SECTION

SCALE: ½" = 1'-0"

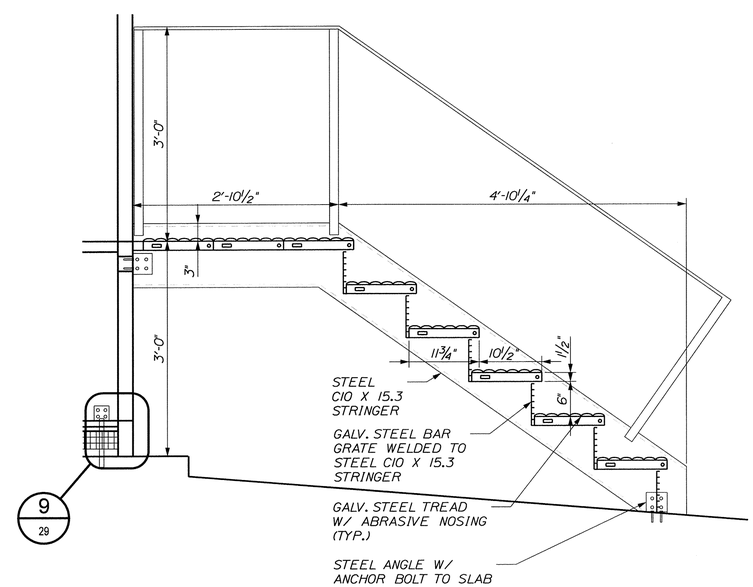

E HIGH/LOW BOOTH: STAIR DETAILS

SCALE: 1" = 1'-0"

STATE OF MAINE
DEPARTMENT OF TRANSPORTATION

BR-1004(210)X

PIN 10042.10

BRIDGE PLANS

BRIDGE NO. ____

STATE OF MAINE BRIAN L. DORCAS No.9463 LICENSED PROFESSIONAL ENGINEER

PROJ. MANAGER	B.L. DORCAS		
DESIGN-DETAILED	SDS	AM	12.JUN.29
CHECKED-REVIEWED	SDS	RWS2	12.JUN.29
DESIGN2-DETAILED2	SDS		
DESIGN3-DETAILED3			
REVISIONS 1			
REVISIONS 2			
REVISIONS 3			
REVISIONS 4			
FIELD CHANGES			

P.E. NUMBER

DATE 12-06-29

SIGNATURE

INTERNATIONAL BRIDGE APPROACH
SAINT JOHN RIVER
AROOSTOOK
FORT KENT

HIGH/LOW BOOTH SECTIONS

SHEET NUMBER

28

OF 81

Filename: $file$ Division: $wkgroup$ Username: $user$ Date: $date$

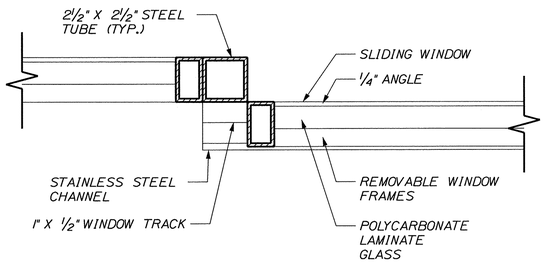

1 / 23 HIGH LOW BOOTH: SLIDING WINDOW CHANNEL
SCALE: 3" = 1'-0"

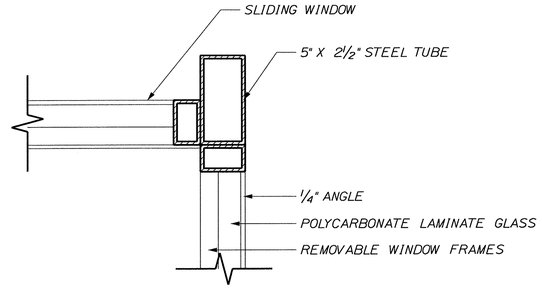

2 / 23 HIGH LOW BOOTH: SLIDING WINDOW
SCALE: 3" = 1'-0"

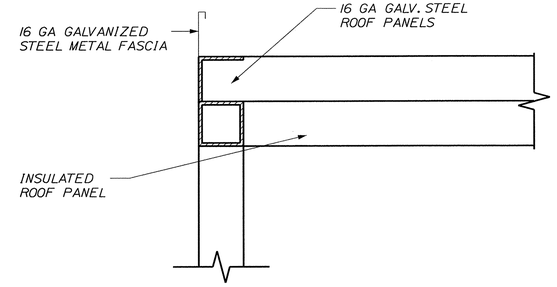

3 / 25, 28 BOOTH ROOF DETAIL
SCALE: 3" = 1'-0"

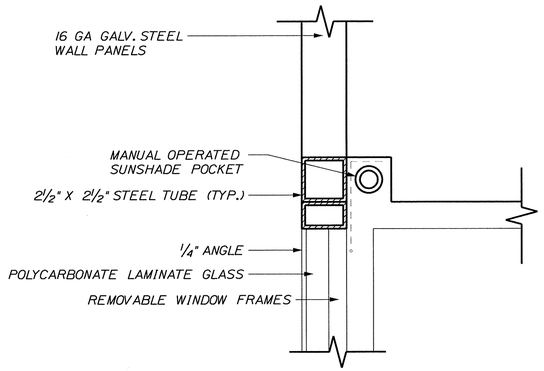

4 / 25, 28 SUNSHADE POCKET
SCALE: 3" = 1'-0"

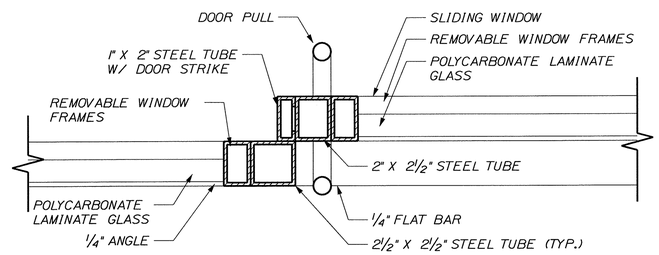

5 / 23 SLIDING DOOR JAMB
SCALE: 3" = 1'-0"

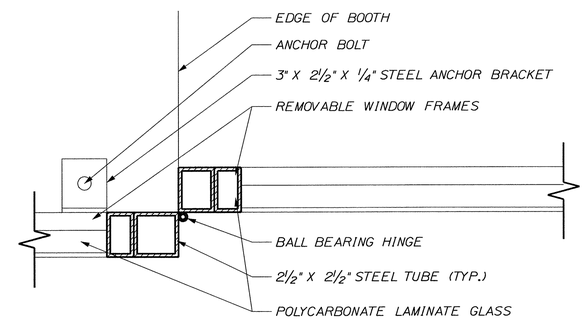

6 / 23 HIGH LOW BOOTH: SWING DOOR HINGE
SCALE: 3" = 1'-0"

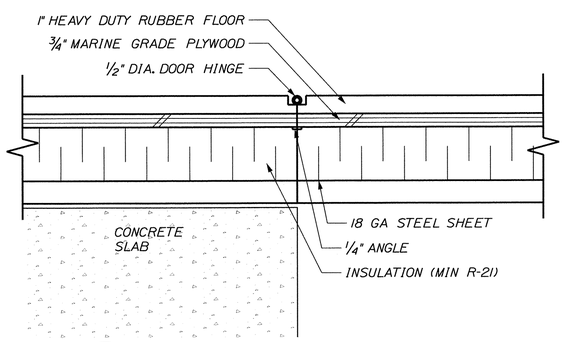

7 / 25, 28 HEAVY DUTY ACCESS DOOR HINGE
SCALE: 3" = 1'-0"

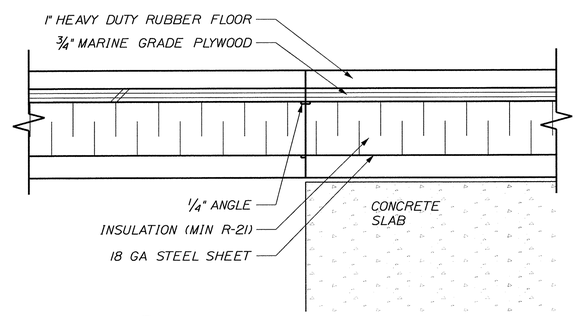

8 / 25, 28 HEAVY DUTY ACCESS DOOR
SCALE: 3" = 1'-0"

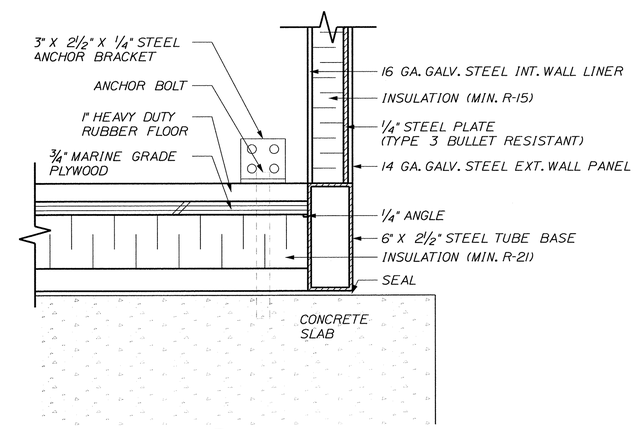

9 / 25, 28 FLOOR DETAIL
SCALE: 3" = 1'-0"

STATE OF MAINE
DEPARTMENT OF TRANSPORTATION

BR-1004(210)X

PIN 10042.10

BRIDGE PLANS

BRIDGE NO. ____

STATE OF MAINE · BRIAN L. DORCAS · No.9483 · LICENSED · PROFESSIONAL ENGINEER

PROJ. MANAGER	B.L. DORCAS	BY	DATE
DESIGN-DETAILED	SDS	AM	12.JUN.29
CHECKED-REVIEWED	SDS	RWS2	12.JUN.29
DESIGN2-DETAILED2			
DESIGN3-DETAILED3			
REVISIONS 1			
REVISIONS 2			
REVISIONS 3			
REVISIONS 4			
FIELD CHANGES			

P.E. NUMBER

12-06-29
DATE

SIGNATURE

INTERNATIONAL BRIDGE APPROACH
SAINT JOHN RIVER
FORT KENT AROOSTOOK

HIGH/LOW and STANDARD BOOTH DETAILS

SHEET NUMBER
29
OF 81

Filename: $file$ Division: $wkgroup$ Username: $user$ Date:$date$

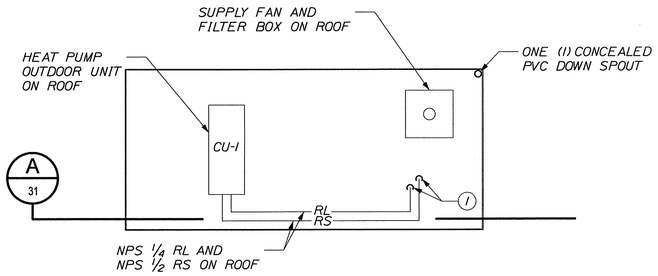

STANDARD BOOTH ROOF PLAN

SCALE: 1/2" = 1'-0"

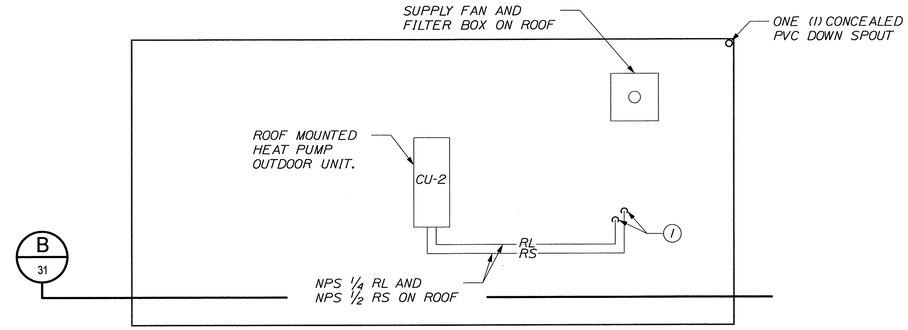

HIGH/LOW BOOTH ROOF PLAN

SCALE: 1/2" = 1'-0"

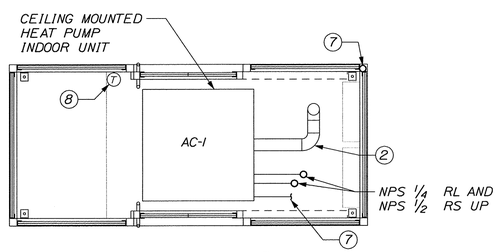

STANDARD BOOTH PLAN

SCALE: 1/2" = 1'-0"

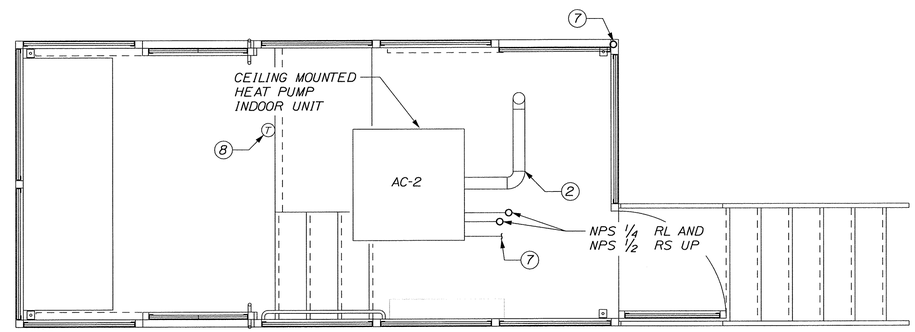

HIGH/LOW BOOTH PLAN

SCALE: 1/2" = 1'-0"

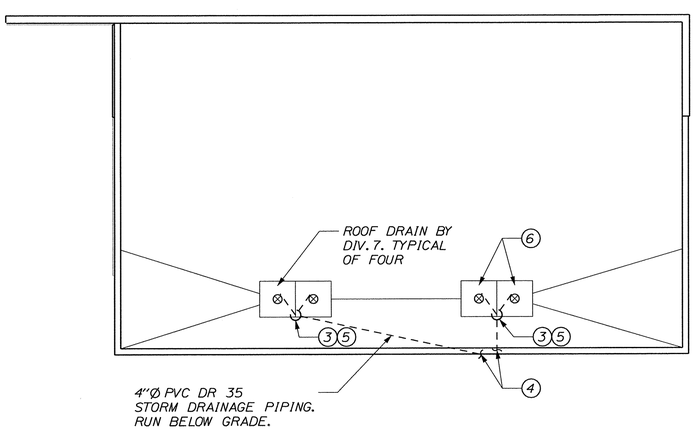

CANOPY ROOF PLAN

SCALE: 1/8" = 1'-0"

KEYNOTES

1. RL AND RS DOWN THROUGH ROOF TO AC-1 / AC-2 BELOW.
2. MAKE 4" Ø SA DUCT CONNECTION TO AC-1 / AC-2 ABOVE CEILING.
3. USE LONG RADIUS ELBOWS ONLY BELOW GRADE.
4. CONNECT TO CB-16. COORDINATE FINAL LOCATIONS AND ELEVATIONS WITH SITE SERVICES CONTRACTOR.
5. 4" Ø PVC STORM DRAIN UP ADJACENT STRUCTURAL COLUMN. INSULATE WITH 2" THICK LAYER OF FIBERGLASS PIPE INSULATION c/w ALL SERVICE JACKET AND VAPOUR BARRIER. PROVIDE ALUMINUM JACKETING ON ALL EXPOSED PIPING INSULATION. COORDINATE INSTALLATION OF HEAT TRACING WITH ELECTRICAL TRADE.
6. MAKE CONNECTIONS TO ROOF DRAINS AS REQUIRED.
7. MAKE AC-1/AC-2 CONDENSATE DRAIN CONNECTION TO PVC DOWN SPOUT ABOVE CEILING.
8. APPROXIMATE LOCATION OF WALL MOUNTED THERMOSTAT. THERMOSTAT TO BE MOUNTED MINIMUM OF 5'-0" A.F.F. COORDINATE WITH ALL APPLICABLE TRADES FOR BEST SUITABLE LOCATION AND OPERATION OF THERMOSTAT.

LEGEND

CU-1	CONDENSING UNIT # 1
AC-1	AIR CONDITIONER # 1
SF-1	SUPPLY FAN # 1
RL	REFRIGERENT LIQUID
RS	REFRIGERENT SUCTION
SA	SUPPLY AIR
AI	ANALOG IN
AO	ANALOG OUT
DI	DIGITAL IN
DO	DIGITAL OUT
SSR	SOLID STATE RELAY
TS	TEMPERATURE SENSOR
⊗	ROOF DRAIN (BY DIVISION 10.)
(7)	ROOM THERMOSTAT

STATE OF MAINE
DEPARTMENT OF TRANSPORTATION

BR-1004(210)X

PIN 10042.10

BRIDGE PLANS

BRIDGE NO. ____

STATE OF MAINE
BRIAN L. DORCAS
No.9483
LICENSED
PROFESSIONAL ENGINEER

P.E. NUMBER

12-06-29
DATE

SIGNATURE

	B.L. DORCAS	CTG	JEM
PROJ. MANAGER	B.L. DORCAS	BY	DATE
DESIGN-DETAILED	CTG	CTG	12.JUN.29
CHECKED-REVIEWED	JEM	JEM	12.JUN.29
DESIGN2-DETAILED2			
DESIGN3-DETAILED3			
REVISIONS 1			
REVISIONS 2			
REVISIONS 3			
REVISIONS 4			
FIELD CHANGES			

INTERNATIONAL BRIDGE APPROACH
SAINT JOHN RIVER
FORT KENT AROOSTOOK

BOOTH and CANOPY
MECH. PLANS and NOTES

SHEET NUMBER

30

OF 81

Filename: $file$ Division: $wkgroup$ Username: $user$ Date:$date$

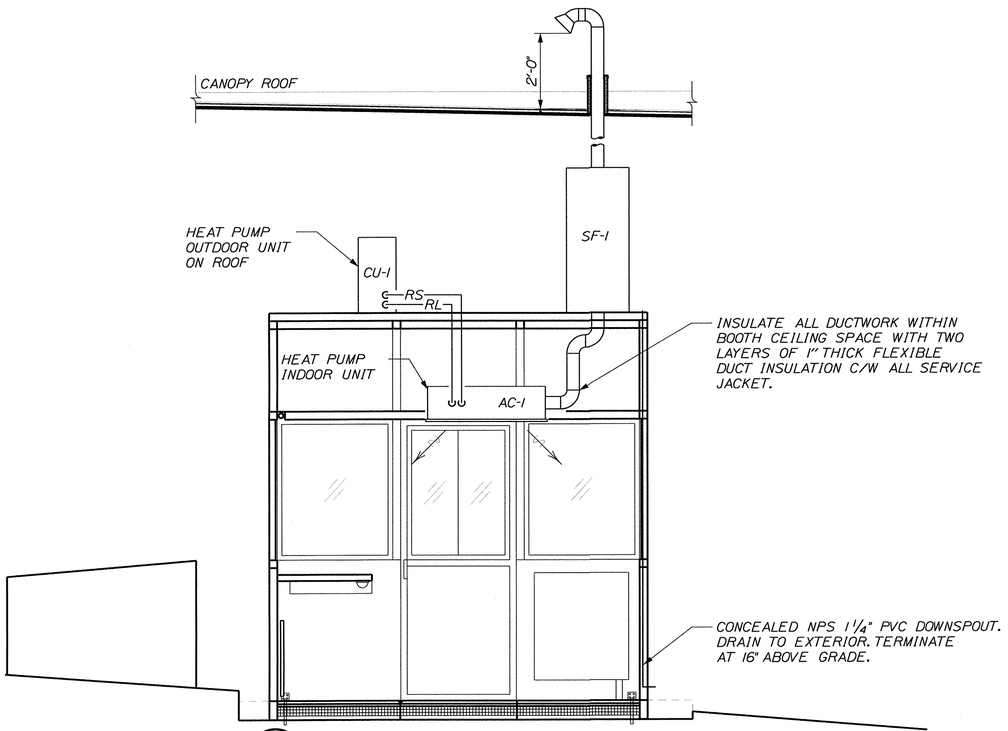

A 30 STANDARD BOOTH SECTION

SCALE: 1/2" = 1'-0"

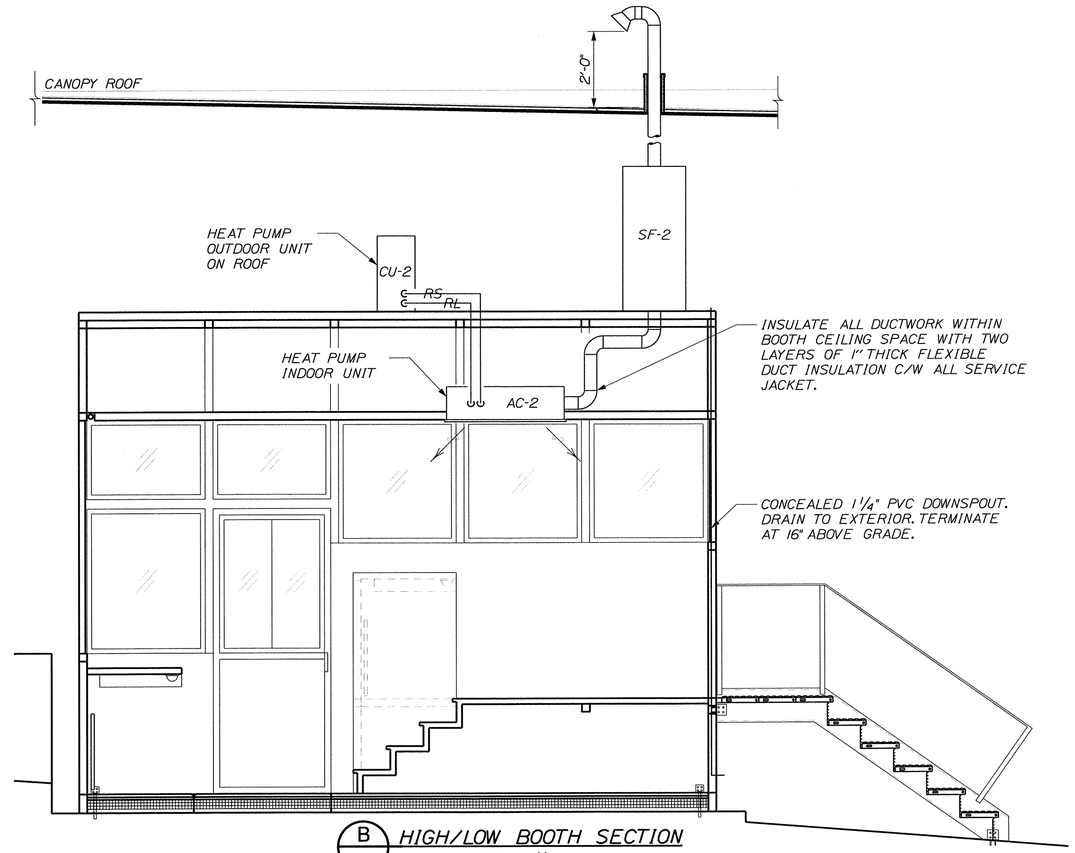

B 30 HIGH/LOW BOOTH SECTION

SCALE: 1/2" = 1'-0"

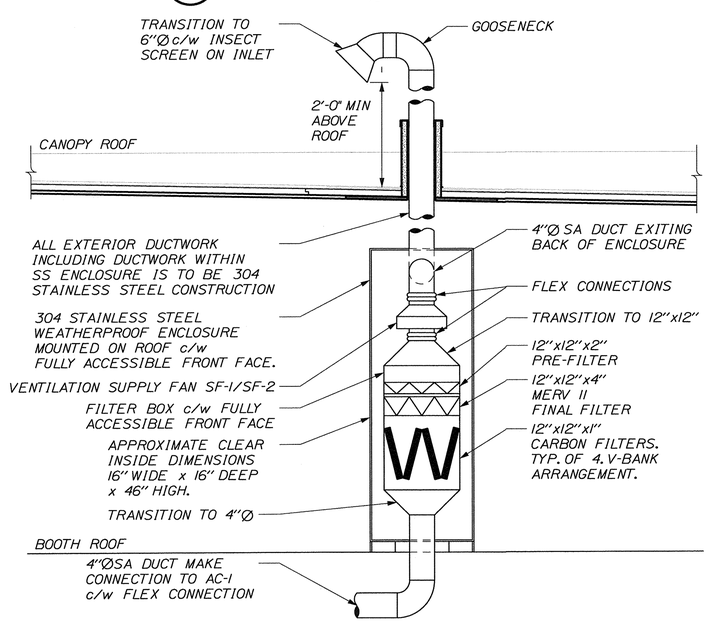

VENTILATION AIR INTAKE DETAIL SF-1 / SF-2

SCALE: 1" = 1'-0"

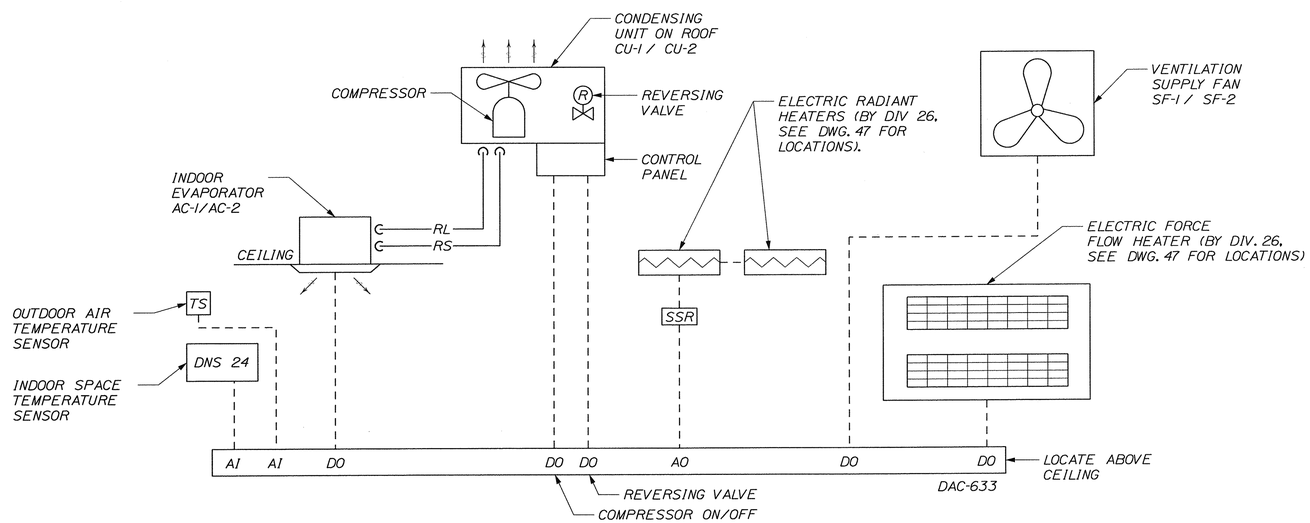

TYPICAL BOOTH HVAC CONTROLS SCHEMATIC

SCALE: NOT TO SCALE

STATE OF MAINE
DEPARTMENT OF TRANSPORTATION

BR-1004(210)X

PIN 10042.10

BRIDGE NO. ____

BRIDGE PLANS

STATE OF MAINE
BRIAN L. DORCAS
No.9463
LICENSED
PROFESSIONAL ENGINEER

P.E. NUMBER

SIGNATURE

13-07-12
DATE

		BY	DATE
PROJ. MANAGER	B.L. DORCAS		
DESIGN-DETAILED	CTG	CTG	12.JUN.29
CHECKED-REVIEWED	JEM	JEM	12.JUN.29
DESIGN2-DETAILED2			
DESIGN3-DETAILED3			
REVISIONS 1			
REVISIONS 2			
REVISIONS 3			
REVISIONS 4			
FIELD CHANGES			

INTERNATIONAL BRIDGE APPROACH
SAINT JOHN RIVER
FORT KENT AROOSTOOK

BOOTH MECHANICAL SECTIONS and DETAILS

SHEET NUMBER

31

OF 81

Filename: $file$ Division: $wkgroup$ Username: $user$ Date:$date$

ELECTRICAL LEGEND AND ABBREVIATIONS

- UNDERGROUND ELECTRICAL CONDUIT
- POWER CONDUIT IN CEILING/WALL
- COMMUNICATIONS CONDUIT IN CEILING/WALL
- PAN ZOOM TILT (PZT) DOME CAMERA (EXISTING TO REMAIN OR RELOCATE)
- STATIONARY CAMERA (EXISTING TO REMAIN OR RELOCATE)
- $D — BOOTH LIGHT CONTROL, DIMMER CAPABILITIES, 100%-10%
- $C3 — CANOPY LIGHT CONTROL-3 WAY SWITCHING TO BE CONTROLLED BY BOTH BOOTHS
- FSI-3 — TRAFFIC CONTROL LIGHT FOOT SWITCH. FSI-3 INDICATES FOOT SWITCH IS LOCATED IN BOOTH 1 AND CONTROLS LANE 3
- $G — GATE CONTROL
- PHONE/DATA OUTLET
- DUPLEX RECEPTACLE
- DURESS BUTTON
- $P — PORT ALERT SWITCH
- 6000 2KW — BASEBOARD HEATER
- FFS4W — FORCE FLOW HEATER
- W — 2 X 2 LED CANOPY LIGHT FIXTURE
- R — RECESSED LED POT LIGHT
- S — WET LOCATION PIT LIGHT
- INTERCOM SYSTEM
- JUNCTION BOX MOUNTED ON POST OR IN CEILING SPACE
- P — BURIED CABLE ENCLOSURE COMPLETE WITH LID
- X1/X — LED AREA LIGHT MOUNTED ON 35' ALUMINUM POLE, MININUM 8" DIAMTER WITH MINIMUM EPA RATING OF 100 MPH PLUS GUSTS
- SURFACE MOUNTED PANELBOARD (SP1, SP2)
- TL* — TRAFFIC CONTROL LIGHT
- SPD — SURGE PROTECTION DEVICE
- ES — ETHERNET SWITCH
- UPS — UNINTERRUPTABLE POWER SUPPLY
- SPC — SUPERVISOR COMPUTER
- C — LIGHTING CONTACTOR
- ANI-3 — RPM ANNUNCIATOR, ANI-3 INDICATES ANNUNCIATOR IS LOCATED IN BOOTH 1 AND CONTROLS LANE 3 RPM
- WSI-3/4 — BOOTH WORK STATION, WSI-3/4 INDICATES WORK STATION IS LOCATED IN BOOTH 1 AND CONTROLS BOTH LANES 3 AND 4
- H — PORT ALERT HORN (EXISTING TO BE RELOCATED)
- DIRECT CONNECTION
- $M — MANUAL MOTOR SWITCH
- PS — PEDESTRIAN SENSOR, STANDARD OF ACCEPTANCE: OPTIX FIT SERIES
- XXX — EQUIPMENT (SEE EQUIPMENT LIST, DWG. 40)
- EXISTING LIGHT POLE
- E — EXISTING LIGHT FIXTURE
- SURGE PROTECTION DEVICE
- OC — WALL MOUNTED OCCUPANCY SENSOR
- UP — FUTURE UTILITY POLE, BY OTHERS
- PC — EXISTING PHOTOCELL
- C — PEDESTRIAN CHIME (3), STANDARD OF ACCEPTANCE: HONEYWELL RCW3502N C/W TRANSFORMER
- AIR TERMINAL LIGHTNING PROTECTION

B*	BATTERY BOX
C*	CONTROL BOX
CG	CORD GRIP
CI	CONTRACTOR INSTALLED
CP	CONTRACTOR PROVIDED
GFE	GOVERNMENT FURNISHED EQUIPMENT
JB	JUNCTION BOX
LB	L STYLE CONDUIT BODY
LPR	LICENSE PLATE READER
RPM	RADIATION PORTAL MONITOR
RSP	RADIATION SENSOR PANEL
SOW	STATEMENT OF WORK
SP	SOURCE PANEL (LOCATED IN NEW BOOTHS)
SPD	SURGE PROTECTION DEVICE
POV	PERSONALLY OPERATED VEHICLE

ELECTRICAL DEMOLITION NOTES:

1. CONTRACTOR SHALL CALL FOR A 'MARK AND LOCATE' WITH LOCAL UTILITIES TO IDENTIFY AND LOCATE ANY AND ALL UNDERGROUND UTILITIES IN AREA PRIOR TO EXCAVATION.

2. CONTRACTOR SHALL IDENTIFY AND CONFIRM ALL SYSTEMS AND EQUIPMENT TO BE REMOVED, RELOCATED AND/OR STORED. SYSTEMS AFFECTED INCLUDE BUT ARE NOT LIMITED TO LPRs, RPMs AND SECURITY.

3. REMOVAL AND DISCONNECTION OF THE THREE EXISTING RPMs SHALL BE DONE IN ACCORDANCE TO SPECIFICATION SECTION 3, RPM STATEMENT OF WORK.

4. CONTRACTOR IS TO COORDINATE PROPER HANDLING, PACKAGING, TRANSPORTATION AND STORAGE OF EXISTING AND NEW EQUIPMENT WITH EACH RESPECTIVE EQUIPMENT MANUFACTURER AND SITE REPRESENTATIVE.

GENERAL ELECTRICAL NOTES:

1. BOOTHS ARE TO BE DELIVERED WIRED, READY FOR POWER AND COMMUNICATIONS INTERCONNECTIONS BY CONTRACTORS. ALL ELECTRICAL COMPONENTS ARE TO BE UL APPROVED AND INSTALLED ACCORDING TO THE NEC. ALL WIRING TO BE AS INDICATED ON CONDUIT SCHEDULE WITH A MINIMUM OF #12 AWG COPPER THHN/THWN FOR POWER CONDUCTORS. ALL CONDUITS TO BE CONCEALED IN WALLS AND WALL VERTICAL STEEL POSTS.

2. INSTALL TWO RPM ANNUNCIATORS IN THE STANDARD BOOTH, ONE FOR LANE 3 AND ONE FOR LANE 4. INSTALL TWO ANNUNCIATORS IN HIGH/LOW BOOTH, ONE FOR LANE 4 AND ONE FOR LANE 5. THE TWO ANNUNCIATORS FOR LANE 4 SHALL BE CONNECTED IN PARALLEL SO THEY OPERATE TOGETHER. ANNUNCIATORS ARE POWERED FROM CONTROL BOX, ITEM 160, C1,C2,C3.

3. ALL EMPTY CONDUITS TO BE PROVIDED WITH PULL STRINGS AND LABELS. CAP AND MAKE ALL EMPTY CONDUITS WATERTIGHT. ALL EMPTY CONDUITS TO BE STUBBED UP 3" ABOVE FINISHED GRADE OR CONCRETE PAD.

4. VAULT CONDUIT ROUTING MAY BE ADJUSTED BASED ON FIELD CONDITIONS.

5. THE STANDARD BOOTH SHALL CONTAIN TWO FOOT SWITCHES TO OPERATE THE TRAFFIC LIGHTS FOR LANE 3 AND 4. THE HIGH-LOW BOOTH SHALL CONTAIN THREE FOOT SWITCHES FOR LANES 4 AND 5. SWITCHES FOR LANE 4 SHALL BE CONNECTED SO THE TRAFFIC LIGHT IN THAT LANE CAN BE CONTROLLED FROM EITHER BOOTH.

6. MAXIMUM EFFECTIVE RUN LENGTH ALLOWED FOR CAT 6 IS 295'. IF ANY RUN EXCEEDS THIS LENGTH, ADDITIONAL SWITCHES MUST BE INSTALLED OR ALTERNATE DATA TRANSFER MUST BE DESIGNED BY CBP-OIT.

7. PROVIDE PADLOCKS AS REQUIRED. SEE RADIATION PORTAL MONITOR EQUIPMENT SCHEDULE ON DWG. 40 FOR MORE INFORMATION AND QUANTITIES.

8. ALL JUNCTION BOXES AND PULL BOXES TO BE MINIMUM NEMA 4 RATED.

9. ALL LOADS CONNECTED TO NEW PANELS SP1 AND SP2 ARE CONSIDERED TO BE NON LIFE SAFETY.

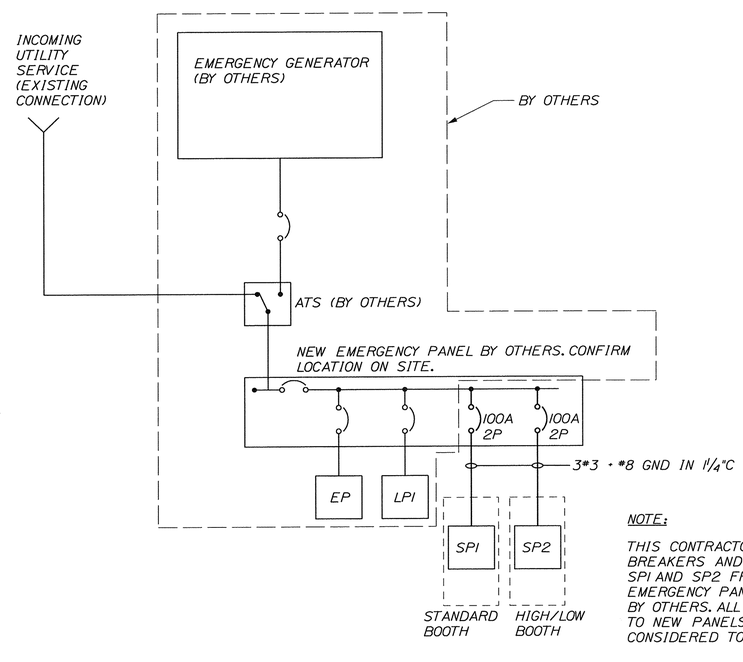

SINGLE LINE DIAGRAM

NOTE:

THIS CONTRACTOR TO ADD BREAKERS AND CONNECT TO SP1 AND SP2 FROM NEW EMERGENCY PANEL SUPPLIED BY OTHERS. ALL LOADS CONNECTED TO NEW PANELS SP1 AND SP2 ARE CONSIDERED TO BE NON LIFE SAFETY.

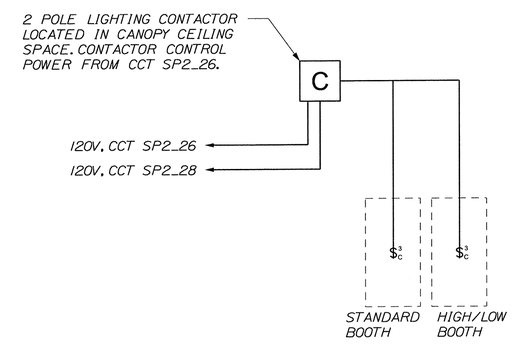

CANOPY LIGHTING WIRING DIAGRAM

STATE OF MAINE
DEPARTMENT OF TRANSPORTATION

BR-1004(210)X

PIN 10042.10

BRIDGE PLANS

BRIDGE NO. ____

MICHAEL A. CLIFFORD No.13269 LICENSED PROFESSIONAL ENGINEER

PROJ. MANAGER	B.L. DORCAS		
DESIGN-DETAILED	TLS	TLS	12.JUN.29
CHECKED-REVIEWED	LEF / ALR	LEF / ALR	12.JUN.29
DESIGN2-DETAILED2			
DESIGN3-DETAILED3			
REVISIONS 1			
REVISIONS 2			
REVISIONS 3			
REVISIONS 4			
FIELD CHANGES			

SIGNATURE — DATE

P.E. NUMBER

DATE

INTERNATIONAL BRIDGE APPROACH
SAINT JOHN RIVER
FORT KENT AROOSTOOK

ELECTRICAL LEGEND, NOTES and WIRING DIAGRAMS

SHEET NUMBER

32

OF 81

Filename: $file$ Division: $wkgroup$ Username: $user$ Date:$date$

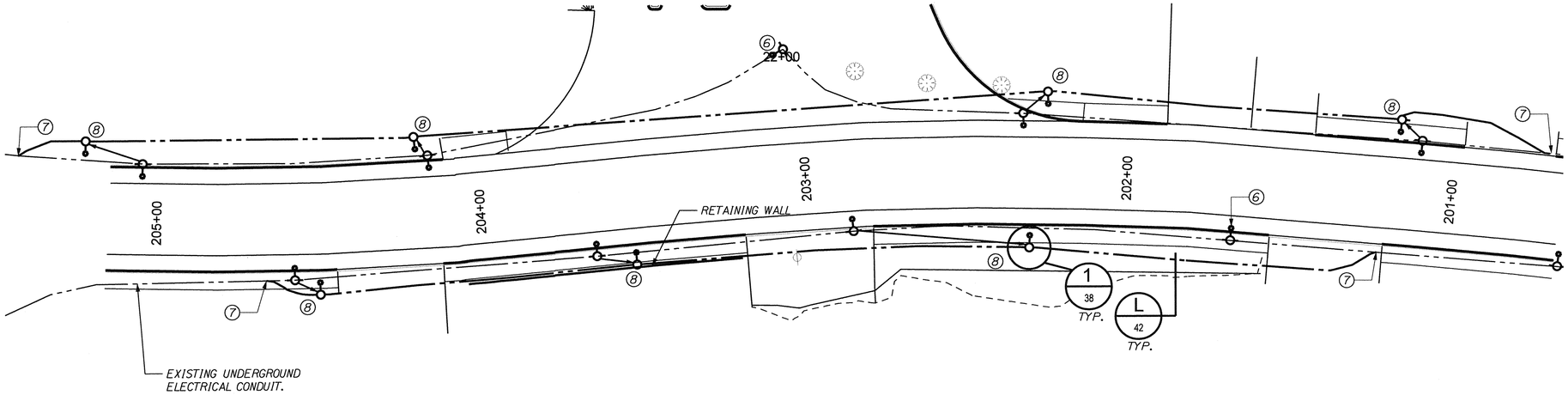

ROUTE 1 CONDUIT AND LIGHTING PLAN

SCALE: 1" = 20'-0"

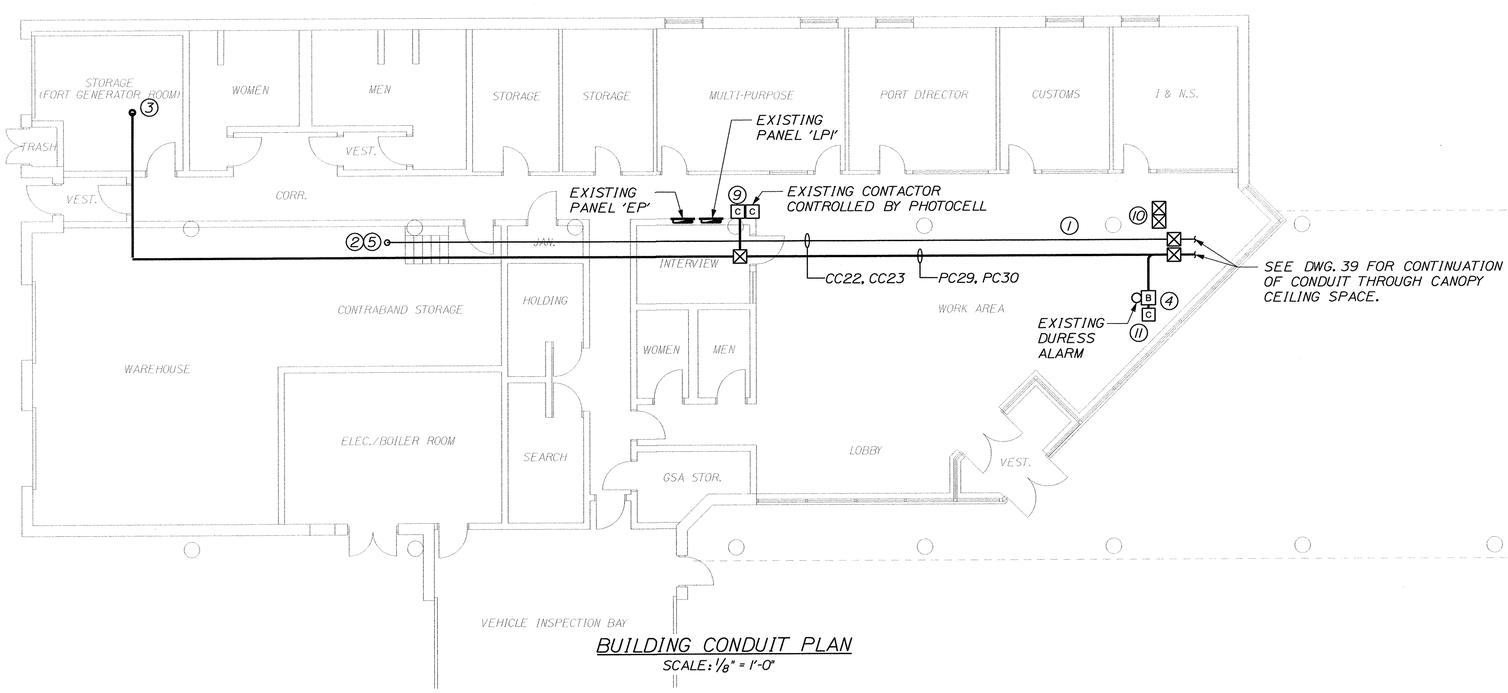

BUILDING CONDUIT PLAN

SCALE: 1/8" = 1'-0"

GENERAL NOTES:

1. CONTRACTOR IS TO CONFIRM WITH LOCAL AUTHORITY AND UTILITY ALL EXISTING CIRCUITRY PRIOR TO CONSTRUCTION. DURING CONSTRUCTION CONTRACTOR IS MAINTAIN INTEGRITY OF CIRCUITS FOR EXISTING FIXTURES BEING RELOCATED AS WELL AS THOSE WHICH WILL REMAIN.

2. CONTRACTOR IS TO INSTALL NEW CONDUIT AND PULL NEW WIRE FOR ALL FIXTURES TO BE RELOCATED.

3. BASES FOR RELOCATED FIXTURES ARE TO MATCH EXISTING FIXTURE BASES.

4. ENSURE RELOCATED LAMP POSTS ARE INSTALLED UPRIGHT AND PLUMB. MAINTAIN CLOSE AND CONSISTANT SPACING TO SIDEWALK.

KEYNOTES:

1. CONDUIT LOCATED IN CEILING SPACE INSIDE BUILDING TO BE RUN ALONG SAME PATH AS EXISING CONDUIT. CONTRACTOR IS TO LOCATE AND CONFIRM EXISTING CONDUIT ROUTING PRIOR TO INSTALLING NEW CONDUIT.
2. COMMUNICATIONS CONDUIT AND CABLING TO END IN CONTRABAND STORAGE ROOM. COIL 50' FOR FUTURE USE AND CONNECTIONS.
3. POWER CONDUIT AND WIRING TO END IN NEW GENERATOR ROOM. NEW 2P 100A BREAKER. CONFIRM PANEL LOCATION ON SITE.
4. CONNECT THE 3 BOOTH DURESS SWITCHES TO EXISTING DURESS ALARM IN BUILDING. RUN NEW WIRING FROM SWITCHES TO EXISTING DURESS ALARM IN NEW CONDUIT PC29 TO JUNCTION BOX AS INDICATED. TRANSITION TO ¾" CONDUIT FOR RUN TO DURESS ALARM AND PEDESTRIAN CHIME.
5. COORDINATE WITH SYSTEM REPRESENTATIVES TO PROVIDE COMPLETE FUNCTIONING SYSTEMS. THIS INCLUDES BUT IS NOT LIMITED TO THE LPR SYSTEM, RPM SYSTEM AND SECURITY SYSTEM.
6. EXISTING STREET LIGHT FIXTURE TO BE REMOVED AND HANDED OVER TO OWNER. REMOVE ALL UNNECCESSARY WIRING.
7. BREAK INTO EXISTING CONDUIT AND CONTINUE WIRING TO NEXT FIXTURE. EXTEND WITH NEW WIRE WHERE REQUIRED.
8. EXISTING FIXTURE TO BE RELOCATED TO NEW LOCATION AS SHOWN.
9. PROVIDE NEW 4 POLE CONTACTOR AND INTERFACE CONTROL TO EXISTING CONTACTOR TO POWER ALL TYPE 'X' FIXTURES. LABEL CONTACTOR 'POWER FROM SP1_22, SP2_22, SP2_24'.
10. TERMINATE EXISTING POWER AND COIL COMMUNICATIONS WIRING/CABLING TO EXISTING BOOTH AND SITE IN NEW BOXES IN BUILDING ATTIC SPACE.
11. MOUNT PEDESTRIAN CHIME NEAR EXISTING DURESS ALARM. RUN WIRING FOR CHIME FROM VAULT 1 TO CHIME IN SAME CONDUIT AS DURESS ALARM WIRING.

STATE OF MAINE
DEPARTMENT OF TRANSPORTATION

BR-1004(210)X

PIN 10042.10

BRIDGE PLANS

BRIDGE NO. ____

STATE OF MAINE
MICHAEL A. CLAVET
No. 13269
PROFESSIONAL ENGINEER

PROJ. MANAGER	B.L. DORCAS		
DESIGN-DETAILED	TLS	TLS	12 JUN 29
CHECKED-REVIEWED	LEF / ALR	LEF / ALR	12 JUN 29
DESIGN2-DETAILED2			
DESIGN3-DETAILED3			
REVISIONS 1			
REVISIONS 2			
REVISIONS 3			
REVISIONS 4			
FIELD CHANGES			

SIGNATURE

P.E. NUMBER

DATE

INTERNATIONAL BRIDGE APPROACH
SAINT JOHN RIVER
FORT KENT AROOSTOOK

ROUTE 1/WEST MAIN STREET and BUILDING CONDUIT PLAN

SHEET NUMBER

33

OF 81

Filename: $file$ Division: $wkgroup$ Username: $user$ Date:$date$

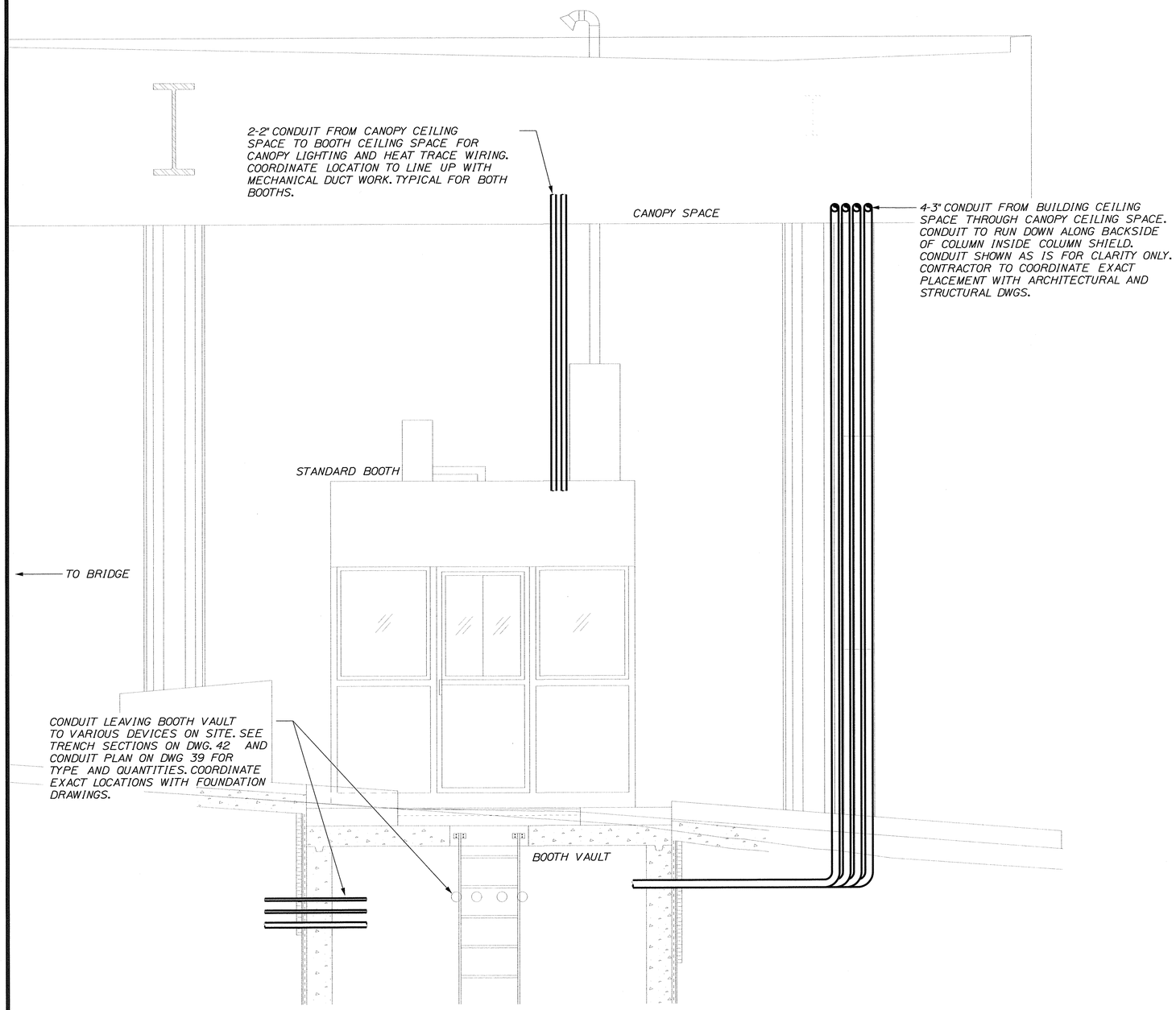

1 / 38 CANOPY CONDUIT ELEVATION DETAIL

SCALE: 1/2" = 1'-0"

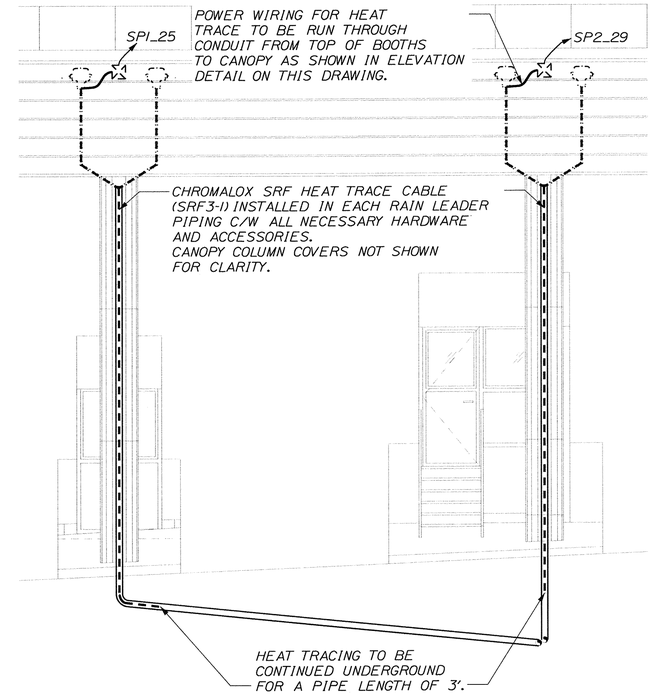

2 / 38 CANOPY HEAT TRACE ELEVATION

NOT TO SCALE

STATE OF MAINE
DEPARTMENT OF TRANSPORTATION

BR-1004(210)X

PIN 10042.10

BRIDGE PLANS

BRIDGE NO. ____

STATE OF MAINE
MICHAEL A. TULER
No. 13269
LICENSED
PROFESSIONAL ENGINEER

PROJ. MANAGER	B.L. DORCAS		
DESIGN-DETAILED	TLS	TLS	12.JUN.29
CHECKED-REVIEWED	LEF / ALR	LEF / ALR	12.JUN.29
DESIGN2-DETAILED2			
DESIGN3-DETAILED3			
REVISIONS 1			
REVISIONS 2			
REVISIONS 3			
REVISIONS 4			
FIELD CHANGES			

SIGNATURE

P.E. NUMBER

DATE

INTERNATIONAL BRIDGE APPROACH
SAINT JOHN RIVER
FORT KENT AROOSTOOK

ELECTRICAL ELEVATIONS DETAILS

SHEET NUMBER

34

OF 81

Filename: $file$ Division: $wkgroup$ Username: $user$ Date:$date$

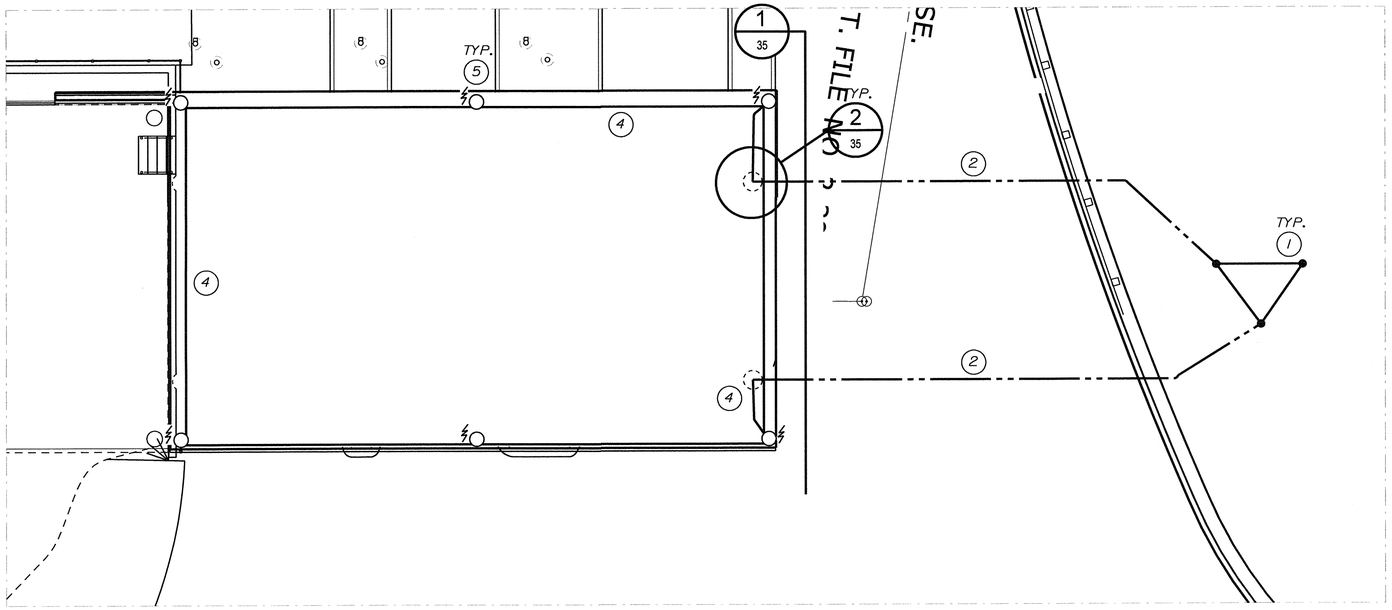

LIGHTNING PROTECTION PLAN

SCALE: 1/8" = 1'-0"

KEYNOTES:

1. 10' SOLID, 3/4" COPPER - CLAD STEEL GROUND RODS NOT LESS THAN 10' BELOW SURFACE AS PER NFPA 780 4.13.2.3.1. (TYPICAL OF THREE)
2. DOWN CONDUCTOR IN RIGID STEEL CONDUIT, BONDED AT END.
3. 3/4" CONDUIT IN CONCRETE COLUMN. SEE CANOPY STRUCTURAL DWGS FOR EXACT PLACEMENT AND LENGTHS IN COLUMN.
4. AIR TERMINALS CONNECTED BY CONDUCTOR AROUND COMPLETE ROOF PERIMETER AND DOWN TWO COLUMNS TO GROUND.
5. AIR TERMINAL MINIMUM LENGTH OF 10'. TYPICAL SIX PLACES.
6. JUNCTION BOX MOUNTED TO SIDE OF COLUMN. CONDUIT RIGID STEEL CONDUIT FROM COLUMN UP THROUGH CANOPY TO AIR TERMINAL.
7. WHERE CONDUCTOR LEAVES CONDUIT, THAT CONDUIT IS SEALED AND BONDED, TYPICAL AT TWO PLACES.

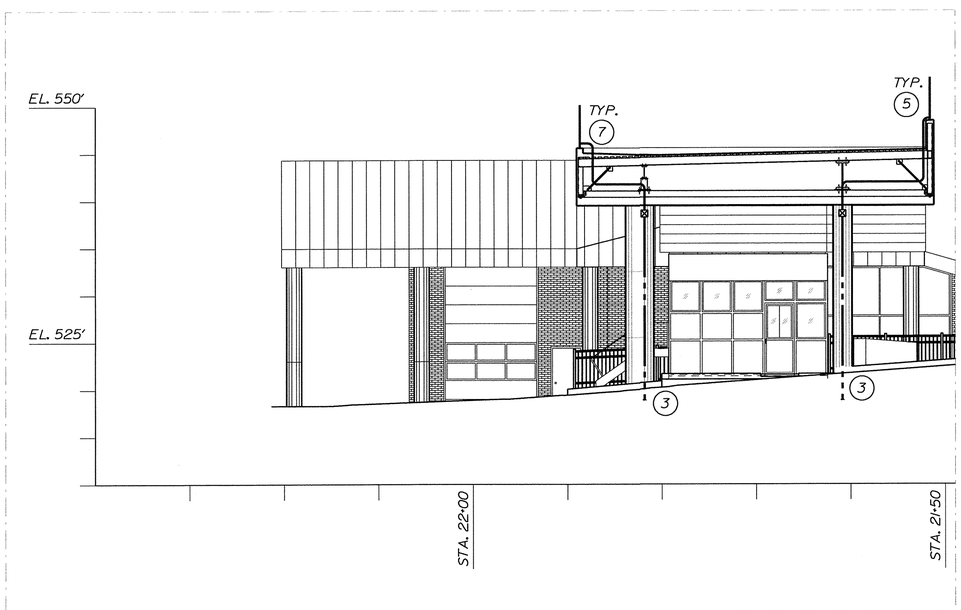

1 / 35 LIGHTNING PROTECTION ELEVATION

SCALE: 1/8" = 1'-0"

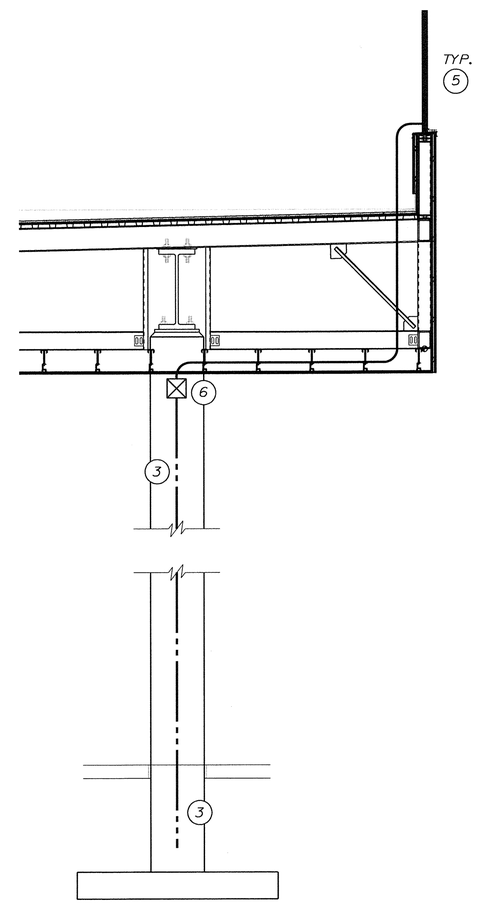

2 / 35 LIGHTNING PROTECTION CONDUIT DETAIL

NOT TO SCALE

STATE OF MAINE
DEPARTMENT OF TRANSPORTATION

BR-1004(210)X

PIN 10042.10

BRIDGE NO. ____

BRIDGE PLANS

STATE OF MAINE
MICHAEL A. OLIVER
No. 13269
LICENSED
PROFESSIONAL ENGINEER

PROJ. MANAGER	B.L. DORCAS		
DESIGN-DETAILED	TLS	TLS	12.JUN.29
CHECKED-REVIEWED	LEF / ALR	LEF / ALR	12.JUN.29
DESIGN2-DETAILED2			
DESIGN3-DETAILED3			
REVISIONS 1			
REVISIONS 2			
REVISIONS 3			
REVISIONS 4			
FIELD CHANGES			

SIGNATURE

P.E. NUMBER

DATE

INTERNATIONAL BRIDGE APPROACH
SAINT JOHN RIVER
FORT KENT AROOSTOOK

LIGHTNING PROTECTION PLAN and DETAILS

SHEET NUMBER

35

OF 81

Filename: $file$ Division: $wkgroup$ Username: $user$ Date:$date$

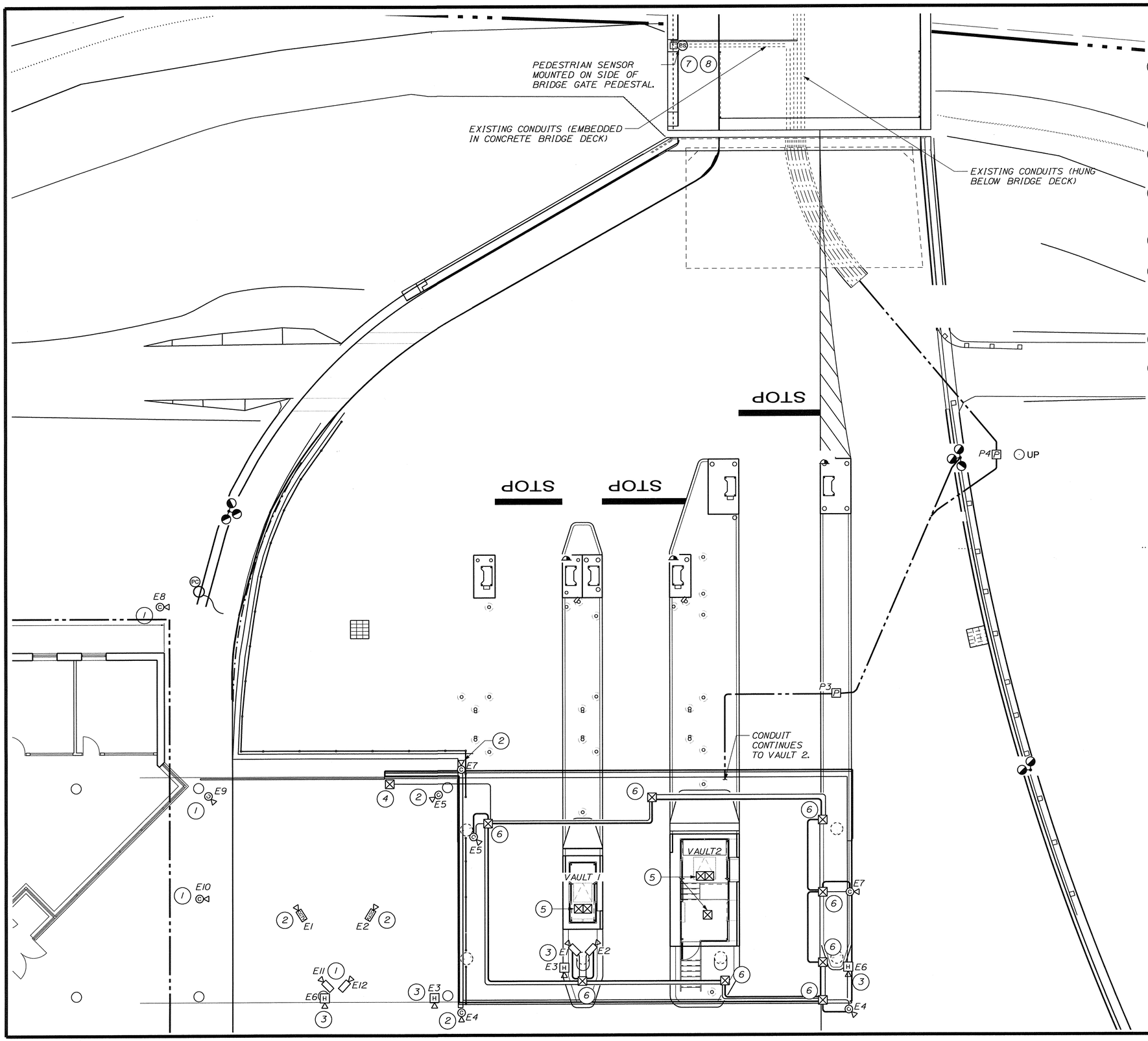

KEYNOTES:

1. EXISTING CAMERA TO REMAIN. CAMERA VIEW TO BE REPOSITIONED DURING EACH STAGE OF CONSTRUCTION TO MAINTAIN OPTIMAL SECURITY COVERAGE. CONTRACTOR TO COORDINATE REQUIREMENTS WITH SITE SECURITY REPRESENTATIVE.
2. EXISTING CAMERA TO BE REMOVED AND RELOCATED TO NEW LOCATION AS INDICATED.
3. EXISTING HORN TO BE REMOVED AND RELOCATED TO NEW LOCATION AS INDICATED. CONNECT TO PORT ALERT ACTIVATION SWITCH LOCATED IN EACH BOOTH
4. EXISTING FIBER NODE. CONTRACTOR TO LOCATE AND CONFIRM FIBER NODE REQUIREMENTS TO ACCOMODATE NEW AND RELOCATED DEVICES WITH SITE SECURITY REPRESENTATIVE. RELOCATE/REPLACE AS NECCESSARY.
5. JUNCATION BOXES FOR FUTURE CAMERA/MICROPHONE INSTALLATION INSIDE BOOTHS. SEE DRAWING 47 FOR DETAILS.
6. JUNCTION BOXES FOR FUTURE CAMERA INSTALLATION. ROUTE EMPTY 1" CONDUIT TO EACH BOX. EXACT NUMBER AND LOCATIONS OF BOXES TO BE DETERMINED ON SITE AND COORDINATED WITH ON SITE SECURITY REPRESENTATIVE. FLUSH MOUNT ALL BOXES IN CANOPY SPACE. MOUNT WITH UNISTRUT AND THREADED ROD AS REQUIRED.
7. PEDESTRIAN SENSOR TO ACTIVATE ANNUNCIATOR (CHIME) IN EACH BOOTH AND BUILDING.
8. CONTRACTOR TO PROVIDE AND INSTALL TRAFFIC GATE ON EXISTING BRIDGE

STATE OF MAINE
DEPARTMENT OF TRANSPORTATION

BR-1004(210)X

PIN 10042.10

BRIDGE NO. ____

BRIDGE PLANS

STATE OF MAINE
MICHAEL A. OLIVER
No. 13269
LICENSED
PROFESSIONAL ENGINEER

P.E. NUMBER

DATE

PROJ. MANAGER	B.L. DORCAS	BY	DATE
DESIGN-DETAILED	TLS	TLS	12.JUN.29
CHECKED-REVIEWED	LEF / ALR	LEF / ALR	12.JUN.29
DESIGN2-DETAILED2			
DESIGN3-DETAILED3			
REVISIONS 1			
REVISIONS 2			
REVISIONS 3			
REVISIONS 4			
FIELD CHANGES			

INTERNATIONAL BRIDGE APPROACH
SAINT JOHN RIVER
FORT KENT AROOSTOOK

SECURITY CONDUIT and DEVICE PLAN

SHEET NUMBER

36

OF 81

Filename: $file$ Division: $wkgroup$ Username: $user$ Date:$date$

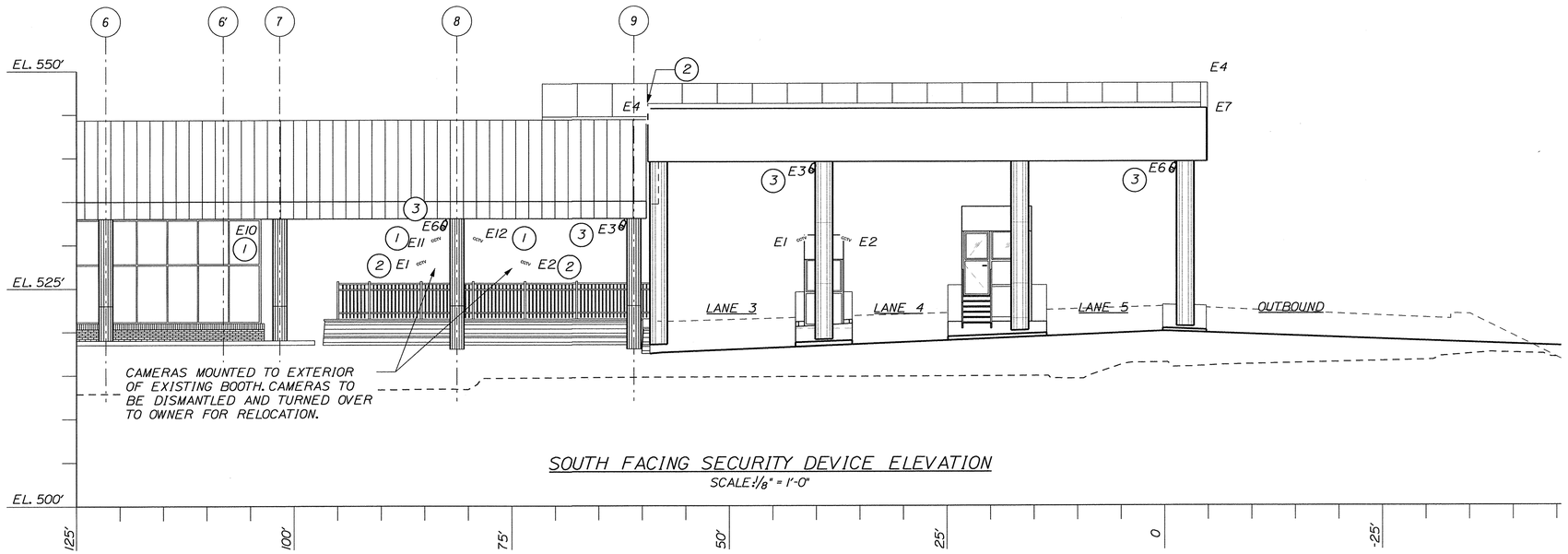

SOUTH FACING SECURITY DEVICE ELEVATION

SCALE: 1/8" = 1'-0"

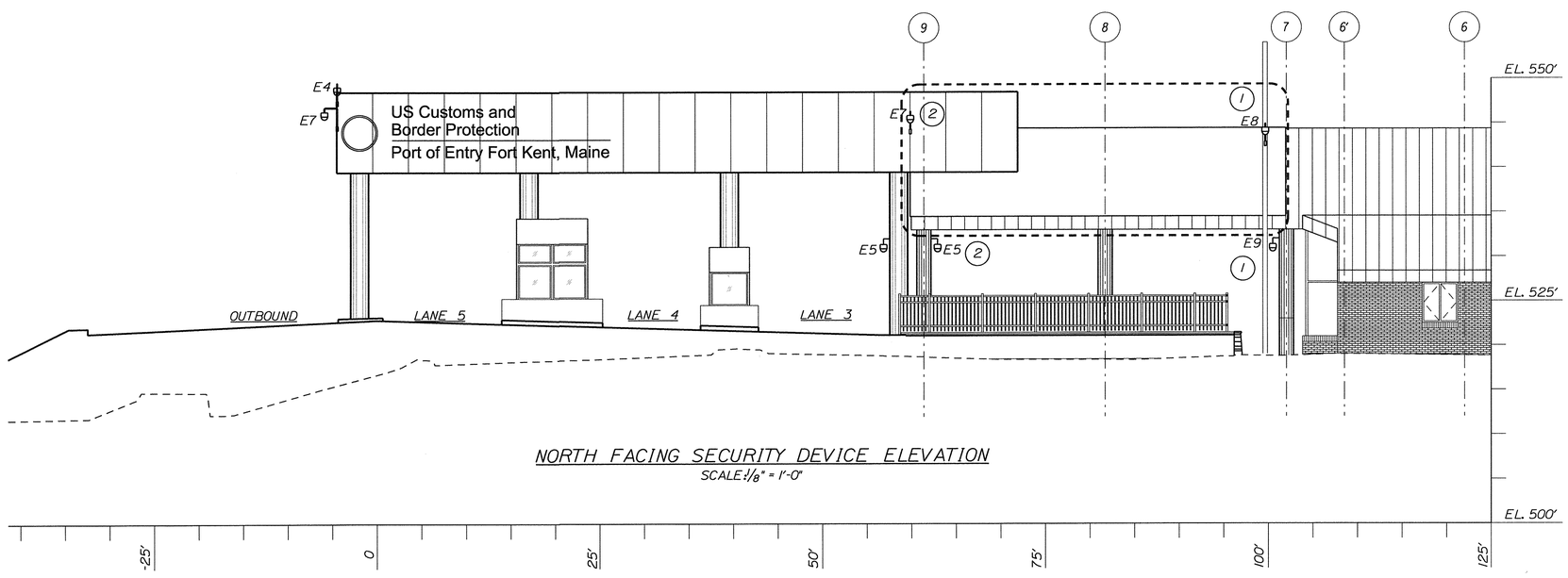

NORTH FACING SECURITY DEVICE ELEVATION

SCALE: 1/8" = 1'-0"

GENERAL NOTES:

1. COORDINATE EXACT FINAL HEIGHTS AND LOCATIONS ON SITE WITH SECURITY REPRESENTATIVE.

KEYNOTES:

1. EXISTING CAMERA TO REMAIN. CAMERA VIEW TO BE REPOSITIONED DURING EACH STAGE OF CONSTRUCTION TO MAINTAIN OPTIMAL SECURITY COVERAGE. CONTRACTOR TO COORDINATE REQUIREMENTS WITH SITE SECURITY REPRESENTATIVE.
2. EXISTING CAMERA TO BE REMOVED AND RELOCATED TO NEW LOCATION AS INDICATED.
3. EXISTING HORN TO BE REMOVED AND RELOCATED TO NEW LOCATION AS INDICATED. CONNECT TO PORT ALERT ACTIVATION SWITCH LOCATED IN EACH BOOTH

STATE OF MAINE
DEPARTMENT OF TRANSPORTATION

BR-1004(210)X

PIN 10042.10

BRIDGE PLANS

BRIDGE NO. ____

STATE OF MAINE
MICHAEL A. COLLER
No. 13289
LICENSED
PROFESSIONAL ENGINEER

SIGNATURE

P.E. NUMBER

DATE

PROJ. MANAGER	B.L. DORCAS		
DESIGN-DETAILED	TLS	TLS	12.JUN.29
CHECKED-REVIEWED	LEF / ALR	LEF / ALR	12.JUN.29
DESIGN2-DETAILED2			
DESIGN3-DETAILED3			
REVISIONS 1			
REVISIONS 2			
REVISIONS 3			
REVISIONS 4			
FIELD CHANGES			

INTERNATIONAL BRIDGE APPROACH
SAINT JOHN RIVER
FORT KENT AROOSTOOK

SECURITY DEVICE ELEVATIONS

SHEET NUMBER

37

OF 81

Filename: $file$ Division: $wkgroup$ Username: $user$ Date:$date$

1 / 33/38 POLE BASE DETAIL (TYPICAL)

NOT TO SCALE

KEYNOTES:

(1) EXISTING LIGHT TO BE REMOVED AND TURNED OVER TO OWNER.

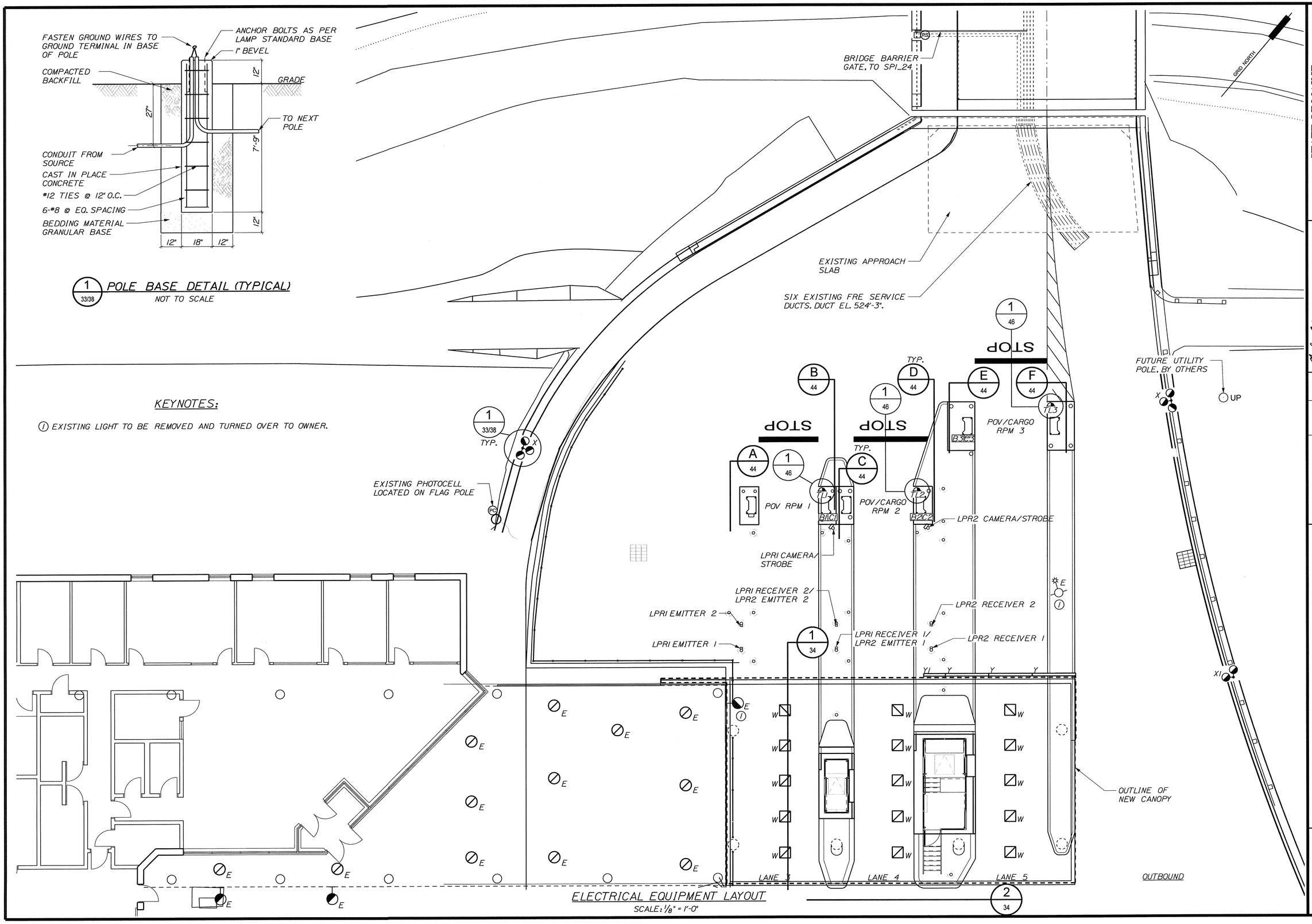

ELECTRICAL EQUIPMENT LAYOUT

SCALE: 1/8" = 1'-0"

STATE OF MAINE
DEPARTMENT OF TRANSPORTATION

BR-1004(210)X

PIN 10042.10

BRIDGE NO. ____

BRIDGE PLANS

MICHAEL A. OLIVER No.13269 LICENSED PROFESSIONAL ENGINEER

SIGNATURE

P.E. NUMBER

DATE

		BY	DATE
PROJ. MANAGER	B.L. DORCAS		
DESIGN-DETAILED	TLS	TLS	12.JUN.29
CHECKED-REVIEWED	LEF / ALR	LEF / ALR	12.JUN.29
DESIGN2-DETAILED2			
DESIGN3-DETAILED3			
REVISIONS 1			
REVISIONS 2			
REVISIONS 3			
REVISIONS 4			
FIELD CHANGES			

INTERNATIONAL BRIDGE APPROACH
SAINT JOHN RIVER
FORT KENT AROOSTOOK

ELECTRICAL EQUIPMENT PLAN and DETAILS

SHEET NUMBER

38

OF 81

Filename: $file$ Division: $wkgroup$ Username:

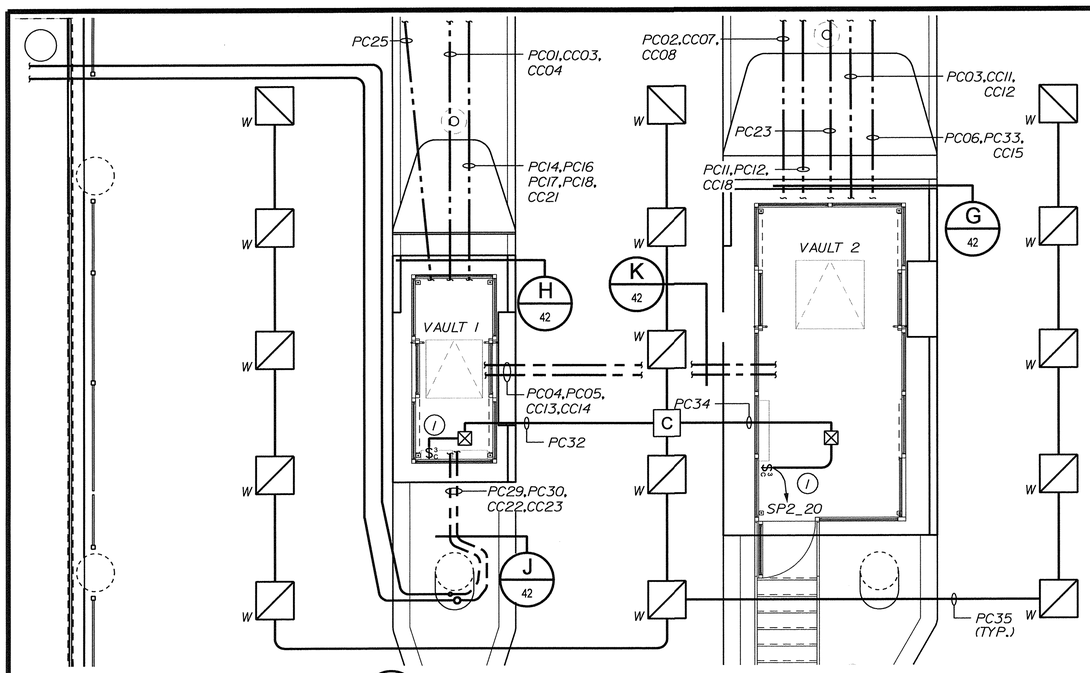

1 / 39 ENLARGED CANOPY AND UNDERGROUND CONDUIT PLAN

SCALE: 1/4" = 1'-0"

GENERAL ELECTRICAL NOTE:

1. ALL CONDUIT TO BE 1" EMPTY CONDUIT FOR PERCEPTICS LPR SYSTEM.

2. ALL POWER AND COMMUNICATION CABLES TO BE IN SEPARATE CONDUITS, CABLE ENCLOSURES, P3 AND P4, AND PULL AND JUNCTION BOXES AS PER NEC.

KEYNOTES:

(1) SEE DWG. 47 STANDARD BOOTH POWER AND COMMUNICATIONS PLAN AND HIGH LOW BOOTH POWER AND COMMUNICATIONS PLAN FOR EXACT LOCATION OF CANOPY LIGHT SWITCHES.

(2) SEE KEYNOTE 9 ON DWG. 33 FOR DETAILS ON EXTERIOR POLE LIGHT WIRING AND CONNECTION TO EXISTING PHOTOCELL CONTROL.

(3) FUTURE UTILITY POLE BY OTHERS.

(4) UNDERGROUND CABLE ENCLOSURE WITH LID. MINIMUM OPENING TO BE 12" X 12" TO ACCOMODATE NECESSARY CONDUIT. SEE DWGS. 39, 41 & 42 FOR QUANTITIES AND SIZES.

(5) UNDERGOUND CABLE ENCLOSURE WITH LID. MINIMUM OPENING TO BE 9" X 14" TO ACCOMODATE NECESSARY CONDUIT. SEE DWGS. 39, 41 & 42 FOR QUANTITIES AND SIZES.

(6) CONNECT SIX NEW CONDUITS TO EXISTING FRE SERVICE DUCTS. RUN CONDUIT PC28 AND CC24 TO NEW UNDERGROUND CABLE ENCLOSURE, P4. RUN REMAINING FOUR CONDUITS TO A LOCATION APPROXIMATELY 2' FROM UNDERGROUND CABLE ENCLOSURE P4. CAP AND STAKE ALL FOUR CONDUIT. ADD SEPARATE ENCLOSURE FOR COMMUNICATIONS.

(7) UNDERGOUND CABLE ENCLOSURE WITH LID. MINIMUM OPENING TO BE 2' X 2' TO ACCOMODATE NECESSARY CONDUIT. SEE DWGS. 39, 41 & 42 FOR QUANTITIES AND SIZES.

(8) RUN CONDUIT PC31 FROM NEW UNDERGROUND CABLE ENCLOSURE, P5 TO A LOCATION APPROXIMATELY 2' FROM UNDERGROUND CABLE ENCLOSURE P4. COORDINATE FINAL CAP AND STAKE LOCATION WITH OTHER FOUR CONDUITS DESCRIBED IN KEYNOTE 6. WHERE POSSIBLE RUN PC31 IN SAME TRENCH AS OTHER CONDUIT. TYPICAL TRENCH SECTION 'M' APPLIES WHEN PC31 IS RUN ALONE IN TRENCH.

(9) RUN ONE LENGTH (8-10') OF 2" CONDUIT FROM UNDERGROUND CABLE ENCLOSURE P5 AS SHOWN. CAP AND STAKE FOR FUTURE USE.

(10) SENSOR CONTACT TO OPERATE PEDESTRIAN SENSOR CHIME IN EACH BOOTH AND MAIN BUILDING. SENSOR POWERED BY SAME CIRCUIT AS GATE.

(11) REFER TO GENERAL ELECTRICAL NOTE 2.

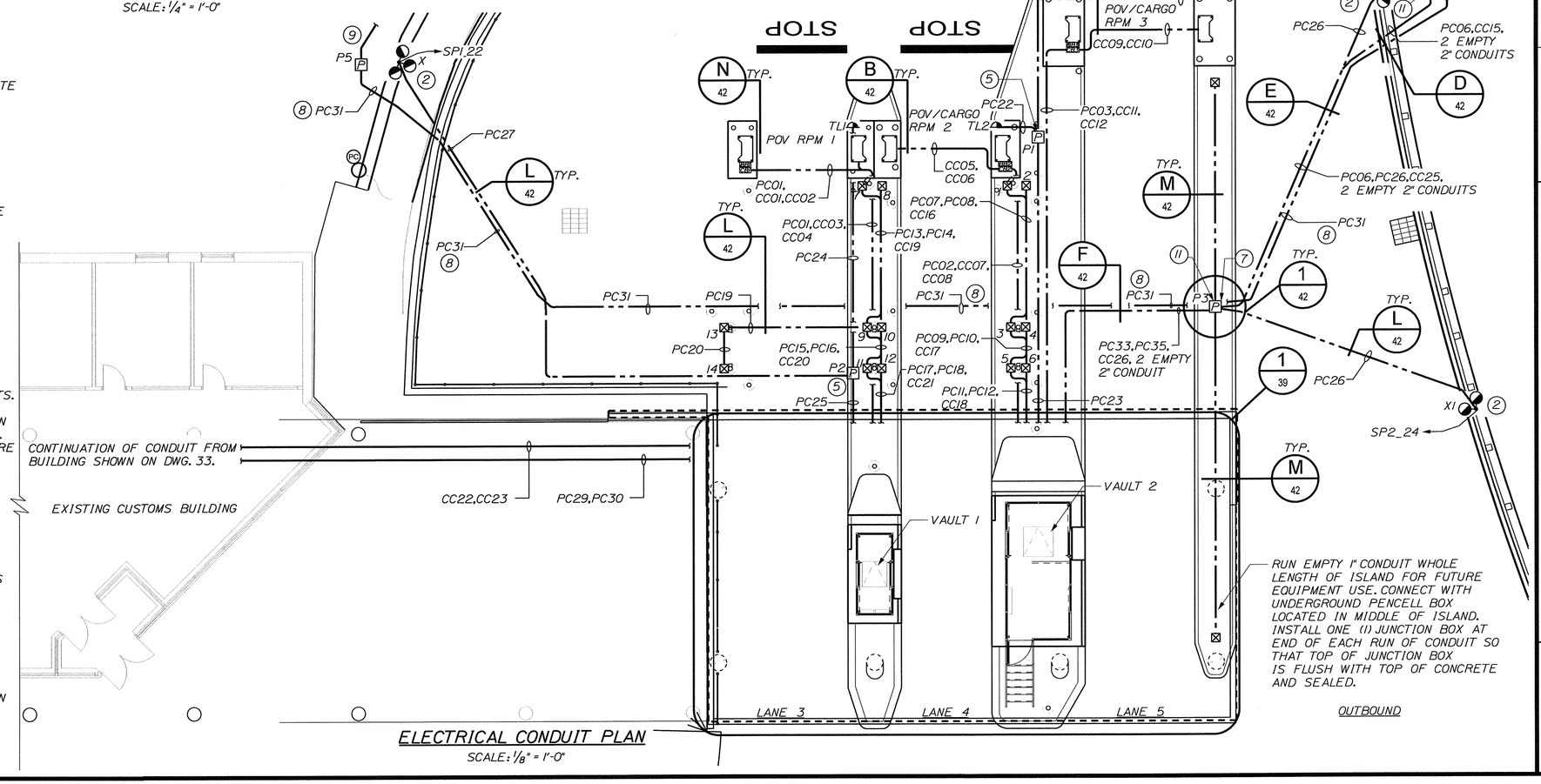

ELECTRICAL CONDUIT PLAN

SCALE: 1/8" = 1'-0"

STATE OF MAINE
DEPARTMENT OF TRANSPORTATION

BR-1004(210)X

PIN 10042.10

BRIDGE PLANS

BRIDGE NO. ____

STATE OF MAINE MICHAEL A. MULLER No. 13299 PROFESSIONAL ENGINEER

PROJ. MANAGER	B.L. DORCAS		
DESIGN-DEF'AILED	TLS	TLS	12-JUN-29
CHECKED-REVIEWED	LEF / ALR	LEF / ALR	12-JUN-29
DESIGN2-DETAILED2			
DESIGN3-DETAILED3			
REVISIONS 1			
REVISIONS 2			
REVISIONS 3			
REVISIONS 4			
FIELD CHANGES			

SIGNATURE — P.E. NUMBER — DATE

INTERNATIONAL BRIDGE APPROACH
SAINT JOHN RIVER
FORT KENT — AROOSTOOK

ELECTRICAL CONDUIT PLAN and DETAILS

SHEET NUMBER

39

OF 81

Filename: $file$ Division: $wkgroup$ Username:

RADIATION PORTAL MONITOR EQUIPMENT SCHEDULE

ITEM #	QUANTITY	PART NAME	MANUFACTURER	PART NUMBER	PROVIDED BY	INSTALLED BY	REMARKS
100	8	CARGO RPM RSP WITH SHROUD	SAIC	DET 21815-2 (N1)	GFE	CI	
110	2	POV RPM RSP WITH SHROUD	SAIC	DET 21815-2 (N2)	GFE	CI	
140	5	INTERIOR ALARM ANNUNCIATOR	SAIC	ANI 21771-1	GFE	CI	
160	3	CONTROL BOX	SAIC	CB 21920-1	GFE	CI	REMAIN MOUNTED AS CURRENTLY INSTALLED ON RPM SHROUD
161	3	BATTERY BOX	SAIC	UPS 21921-1	GFE	CI	REMAIN MOUNTED AS CURRENTLY INSTALLED ON RPM SHROUD
170	12	VEHICLE PRESENCE SENSOR (VPS) KIT	SAIC	BANNER 0456E05 / 045BB6R05	GFE	CI	REMAIN MOUNTED AS CURRENTLY INSTALLED
172	3	VPS MOUNTING HARDWARE SETS	VARIOUS	N/A	CP	CI	REMAIN MOUNTED AS CURRENTLY INSTALLED
173	6	VPS UNISTRUT (10FT SECTION)	UNISTRUT	P7000SS	CP	CI	REMAIN MOUNTED AS CURRENTLY INSTALLED
390	6	PROTECTOR PACK SURGE SUPPRESSOR	LINX	CAT6 - LAN	CP	CI	INSTALL ONE SPD ON EACH END OF ANY CAT 6 RUN IN WHICH ONE END START OUTSIDE; INSTALL IN ITEM #774
422	3	8 INCH RED / GREEN TRAFFIC LIGHT ASSEMBLY	INDUSTRIAL TRAFFIC SOLUTIONS		CP	CI	PROVIDE ALL NECESSARY HARDWARE ACCORDING TO MANUFACTURER'S REQUIREMENTS.
462	5	SPRING LOADED FOOT SWITCH	SQUARE D	AWI	CP	CI	
750	9	PADLOCK			GFE	GI	REMAIN MOUNTED AS CURRENTLY INSTALLED
756	6	GROUNDING ROD			CP	CI	INSTALL ONE PER FOUNDATION AND CONNECT TO THE RPM SHROUD USING 1/0 COPPER GROUND WIRE
771	6	6X6 4X NEMA JUNCTION BOX			CP	CI	MOUNT ON RPM WITH HARDWARE TO MANUFACTURER'S REQUIREMENTS. USE EXISTING HARDWARE AS APPLICABLE. QUANTITY MAY VARY.
773	6	12X12X6 NEMA 4X RATED JUNCTION BOX	HOFFMAN	CSD12126SS6	CP	CI	MOUNT ON RPM WITH HARDWARE TO MANUFACTURER'S REQUIREMENTS. USE EXISTING HARDWARE AS APPLICABLE. QUANTITY MAY VARY.
774	3	12X12X6 316 SS PADLOCKABLE JUNCTION BOX	HOFFMAN	CSD12126SS6	CP	CI	JUNCTION BOXES TO INCLUDE: 1 PADLOCKABLE HANDLE 1 CONDUCTING BACK PANEL 1 STRAIN RELIEF CONNECTOR USE EXISTING HARDWARE AS APPLICABLE. QUANTITY MAY VARY.

FIXTURE SCHEDULE (CONTRACTOR PROVIDED/INSTALLED)

ITEM NO. / SYMBOL	QUANTITY	DESCRIPTION	APPROVED EQUALS	LAMP TYPE, VOLTAGE, COLOR TEMP, WATTAGE
R	9	6" LED RECESSED POTLIGHT C/W DIMMING CAPABILITIES	PHILIPS OMEGA OM6LED S9120-R6LED40KWDCS PMC LIGHTING GLE-XL-2000-4060-1-D CREE SR6H-A-120V-10V • SR6E-18L-A-40K • SR6T-45-SS6C-FF	LED, 120V, 4000K, 39W LED, 120V, 4000K, 36W LED, 120V, 4000K, 24W
X	2	THREE (3) LED AREA LIGHTS MOUNTED ON 35' POLE C/W ALL REQUIRED MOUNTING HARDWARE. MINIMUM FIXTURE LUMENS: 21 000.	PHILIPS GARDCO PUREFORM LED P32-A1-3-3-260LA-CW-UNIV-NP VISIONAIRE LIGHTING EL2-5-T3-240LC-3-4K-UNV-WH COOPER LIGHTING MCGRAW EDISON VTS VENTUS LED VTS-BIO-LED-E1-T3-WH-VA1045-XX WIDE-LITE AEROSCAPES ASA1601S4K3-IST	LED, 120V, 4000K, 260W LED, 120V, 4000K, 280W LED, 120V, 4000K, 240W LED, 120V, 4000K, 254W
X1	1	TWO (2) LED AREA LIGHTS MOUNTED ON 35' POLE C/W ALL REQUIRED MOUNTING HARDWARE. MINIMUM FIXTURE LUMENS: 21 000.	PHILIPS GARDCO PUREFORM LED P32-A1-2@90-3-260LA-CW-UNIV-NP VISIONAIRE LIGHTING EL2-5-T3-240LC-3-4K-UNV-WH COOPER LIGHTING MCGRAW EDISON VTS VENTUS LED VTS-BIO-LED-E1-T3-WH-VA1044-XX WIDE-LITE AEROSCAPES ASA1601S4K3-IST	LED, 120V, 4000K, 260W LED, 120V, 4000K, 280W LED, 120V, 4000K, 240W LED, 120V, 4000K, 254W
W	15	LED CANOPY LIGHT MOUNTED TO UNDERSIDE OF CANOPY WITH UNISTRUT AND THREADED ROD AS NECCESSARY. MINIMUM FIXTURE LUMENS: 10 000.	LSI INDUSTRIES CROSSOVER CR03 S LED 128 450 CW UE WHT PHILIPS GARDCO SLENDERFORM SFC-CD-140LA-CW-UNIV-NP VISIONAIRE LIGHTING EL2-2-T5-144LC-3-4K-UNV-CM-WH	LED, 120V, 5300K, 146W LED, 120V, 5700K, 140W LED, 120V, 4000K, 168W
Y / Y1	3 / 1	8' / 4' SIGN LIGHT MOUNTED TO FRONT OF CANOPY. FIXTURE COLOR TO MATCH CANOPY COLOR. CENTER FIXTURES ACROSS SIGN TO PROVIDE UNIFORM ILLUMINATION.	LSI INDUSTRIES 8WF * 1H0 0 120 / 4WF * 1H0 0 120 PAPPI LIGHTING LO-PRO LP08LED120WM / LP04LED120WM	FLUO, 120V, 800MA LED, 120V, 48/24W
S	2	INCANDESCENT WALL MOUNTED PIT LIGHT	GE H8 X 30F 2W KK STONCO VWIGC HUBBELL VW-151 • VFB-15 • VW-1 • V6-15	120V, MAX. 100W
OS	2	OCCUPANCY SENSOR TO CONTROL PIT LIGHT. SENSOR TO MATCH FIXTURE. FINAL PLACEMENT OF SENSOR TO BE DETERMINED ON SITE. SENSOR TO BE MOUNTED IN SUCH A WAY THAT THE PIT LIGHT TURNS ON IMMEDIATELY WHEN VAULT DOOR IS OPENED.		

SP1

POWER SUPPLY: 120/240V-1 /3W
MAINS: 100A
BREAKING CAPACITY: 10kA

MAIN BREAKER
C/W 100A MAIN BREAKER

DESCRIPTION	LOAD (kw) A	LOAD (kw) B	BRKR SIZE	# P	CCT	CCT	# P	BRKR SIZE	LOAD (KW) A	LOAD (KW) B	DESCRIPTION
RPM 1	0.5	·	20	1	1	2	1	15	0.2	·	BOOTH LIGHTS
RECEPTACLES	·	0.2	20	1	3	4	2	30	·	1.5	FORCE FLOW HEATER
TRAFFIC LIGHT 1	0.1	·	15	1	5	6			1.5	·	
RECEPTACLES	·	0.2	20	1	7	8	2	15	·	0.5	RADIANT HEATER
SPACE	·	·	·	·	9	10			0.5	·	
SUPPLY FAN	·	0.1	15	1	11	12	2	20	·	1.5	AC-1
CU-1	1.5	·	20	2	13	14			1.5	·	
	·	1.5			15	16	1	20	·	·	SPARE
DURESS ALARM	0.2	·	15	1	17	18	1	20	·	·	SPARE
INTERCOM	·	0.2	15	1	19	20	1	20	·	·	SPARE
QUAD RECEPTACLE	0.2	·	20	2	21	22	1	15	0.9	·	SITE LIGHTS 'X' (3)
	·	0.2			23	24	1	15	·	0.5	GATE, LIGHT, SENSOR
HEAT TRACE	0.2	·	*15	1	25	26	1	15	0.2	·	PEDESTRIAN CHIME (3)
	·	·	·	·	27	28	·	·	·	·	SPACE
SPACE	·	·	·	·	29	30	·	·	·	·	SPACE
SPACE	·	·	·	·	31	32	·	·	·	·	SPACE
SPACE	·	·	·	·	33	34	·	·	·	·	SPACE
SPACE	·	·	·	·	35	36	·	·	·	·	SPACE
SPACE	·	·	·	·	37	38	·	·	·	·	SPACE
SPACE	·	·	·	·	39	40	2	30	·	·	SURGE SUPPRESSION
SPACE	·	·	·	·	41	42	·	·	·	·	SPACE
PHASE LOAD	2.7	2.4							4.8	4.0	
TOTAL PHASE LOAD	A=7.5 B=6.4										TOTAL 13.9kW

* 30ma AGFI

SP2

POWER SUPPLY: 120/240V-1 /3W
MAINS: 100A
BREAKING CAPACITY: 10kA

MAIN BREAKER
C/W 100A MAIN BREAKER

DESCRIPTION	LOAD (kw) A	LOAD (kw) B	BRKR SIZE	# P	CCT	CCT	# P	BRKR SIZE	LOAD (KW) A	LOAD (KW) B	DESCRIPTION
RPM 2	0.5	·	20	1	1	2	1	15	0.2	·	BOOTH LIGHTS
RECEPTACLES	·	0.2	15	1	3	4	2	30	·	2.5	FORCE FLOW HEATER
TRAFFIC LIGHT 2	0.1	·	15	1	5	6			2.5	·	
RECEPTACLES	·	0.2	15	1	7	8	2	20	·	0.8	RADIANT HEATER
SPACE	·	·	·	·	9	10			0.8	·	
SUPPLY FAN	·	0.1	15	1	11	12	2	20	·	1.5	AC-2
CU-2	1.5	·	20	2	13	14			1.5	·	
	·	1.5			15	16	1	15	·	0.2	DURESS ALARM
RPM 3	0.5	·	20	1	17	18	1	15	0.2	·	INTERCOM
TRAFFIC LIGHT 3	·	0.1	15	1	19	20	1	20	·	·	CANOPY LIGHT CONTACTOR
SPARE	·	·	20	1	21	22	1	15	0.9	·	SITE LIGHTS 'X' (3)
SPARE	·	·	20	1	23	24	1	15	·	0.6	SITE LIGHTS 'X1' (2)
SPARE	·	·	20	1	25	26	1	15	1.2	·	CANOPY LIGHTS 'W' (8)
SPACE	·	·	·	·	27	28	1	15	·	1.2	CANOPY LIGHTS 'W' (7)
HEAT TRACE	0.2	·	*15	1	29	30	1	20	·	·	SPARE
SPACE	·	·	·	·	31	32	1	20	·	·	SPARE
SPACE	·	·	·	·	33	34	·	·	·	·	SPACE
SPACE	·	·	·	·	35	36	·	·	·	·	SPACE
SPACE	·	·	·	·	37	38	·	·	·	·	SPACE
SPACE	·	·	·	·	39	40	2	30	·	·	SURGE SUPPRESSION
SPACE	·	·	·	·	41	42			·	·	
PHASE LOAD	2.8	2.1							7.3	6.8	
TOTAL PHASE LOAD	A=10.1 B=8.9										TOTAL 19kW

* 30ma AGFI

HEATER SCHEDULE (CONTRACTOR PROVIDED/INSTALLED)

ITEM NO.	QUANTITY	DESCRIPTION	APPROVED EQUALS
1002A	1	900 WATT RADIANT CORE HEATER c/w JB ON EACH END. STAINLESS STEEL TUBULAR HEATING ELEVMENT - TO BE SUPPORTED OFF CEILING WITH METAL HANGERS (ATTACH TO WALL HEATER BRACKETS SUPPLIED) MINIMUM CLEARANCE FROM FLOOR 72", MINIMUM FROM CEILING 4½".	OUELLET ORC0900 LENGTH 71" 240 VOLT DIMPLEX STELPRO
1002B	1	750 WATT RADIANT HEATER SIMILAR TO ABOVE	OUELLET ORC0750 LENGTH 59" 240 VOLT DIMPLEX STELPRO
1002C	2	450 WATT RADIANT HEATER SIMILAR TO ABOVE	OUELLET ORC0450 LENGTH 34" 240 VOLT DIMPLEX STELPRO
1003A	1	FORCE FLOW HEATER LOCATED UNDER DESKS. SIZES AS INDICATED: 3000W	OUELLET OCA03000-OAC-BS1 DIMPLEX EWA30C31-8753 STELPRO CF3002
1003B	1	5000W	OUELLET OAC05000-OAC-BC-1 DIMPLEX STELPRO

STATE OF MAINE
DEPARTMENT OF TRANSPORTATION

BR-1004(210)X

PIN 10042.10

BRIDGE PLANS

BRIDGE NO. ____

STATE OF MAINE
MICHAEL A. OLIVER
No. 13269
LICENSED
PROFESSIONAL ENGINEER

SIGNATURE		P.E. NUMBER	DATE

PROJ. MANAGER	B.L. DORCAS	BY	DATE
DESIGN-DETAILED	TLS	TLS	12.JUN.29
CHECKED-REVIEWED	LEF / ALR	LEF / ALR	12.JUN.29
DESIGN2-DETAILED2			
DESIGN3-DETAILED3			
REVISIONS 1			
REVISIONS 2			
REVISIONS 3			
REVISIONS 4			
FIELD CHANGES			

INTERNATIONAL BRIDGE APPROACH
SAINT JOHN RIVER
FORT KENT AROOSTOOK

EQUIPMENT and PANEL SCHEDULES

SHEET NUMBER
40
OF 81

Date: $date$
Username: $user$
Division: $wkgroup$
Filename: $file$

CONDUIT SCHEDULE

CONDUIT NO.	FROM	TO	SIZE	FILL
POWER				
PC01	BATTERY BOX 1	VAULT 1	2"	P01
PC02	BATTERY BOX 2	VAULT 2	2"	P02
PC03	BATTERY BOX 3	VAULT 2	2"	P03
PC04	VAULT 2	VAULT 1	3"	P21,P6,P18
PC05	VAULT 2	VAULT 1	3"	EMPTY
PC06	UNDERGROUND PULLBOX, P4	UNDERGROUND PULLBOX, P3	1"	P04,P18
PC07	JUNCTION BOX 2	JUNCTION BOX 4	1"	EMPTY
PC08	JUNCTION BOX 2	VAULT 2	1"	EMPTY
PC09	JUNCTION BOX 4	JUNCTION BOX 6	1"	EMPTY
PC10	JUNCTION BOX 4	VAULT 2	1"	EMPTY
PC11	JUNCTION BOX 6	VAULT 2	1"	EMPTY
PC12	JUNCTION BOX 6	VAULT 2	1"	EMPTY
PC13	JUNCTION BOX 8	JUNCTION BOX 10	1"	EMPTY
PC14	JUNCTION BOX 8	VAULT 1	1"	EMPTY
PC15	JUNCTION BOX 10	JUNCTION BOX 12	1"	EMPTY
PC16	JUNCTION BOX 10	VAULT 1	1"	EMPTY
PC17	JUNCTION BOX 12	VAULT 1	1"	EMPTY
PC18	JUNCTION BOX 12	VAULT 1	1"	EMPTY
PC19	JUNCTION BOX 10	JUNCTION BOX 13	1"	EMPTY
PC20	JUNCTION BOX 13	JUNCTION BOX 14	1"	EMPTY
PC21	TRAFFIC LIGHT 3	PULL BOX 1	1"	P07
PC22	TRAFFIC LIGHT 2	PULL BOX 1	1"	P09
PC23	PULL BOX 1	VAULT 2	1"	P07,P09
PC24	TRAFFIC LIGHT 1	PULL BOX 2	1"	P11
PC25	PULL BOX 2	VAULT 1	1"	P11,P12
PC26	LED AREA LIGHT	PULL BOX 3	1"	P12
PC27	LED AREA LIGHT	PULL BOX 2	1"	P12
PC28	EXISTING CONDUIT	UNDERGROUND PULLBOX, P4	4"	P04,P18
PC29	VAULT 1	MAIN BUILDING	3"	P20, P21
PC30	VAULT 1	MAIN BUILDING	3"	EMPTY
PC31	UNDERGROUND PULLBOX, P5	AS INDICATED ON DWG. 39	2"	EMPTY
PC32	CANOPY LIGHT CONTACTOR	STANDARD BOOTH	1"	P19
PC33	PULL BOX 3	VAULT 2	1"	P12
PC34	CANOPY LIGHT CONTACTOR	HIGH LOW BOOTH	1"	P19
PC35	LED CANOPY LIGHT	LED CANOPY LIGHT	1"	P19
PC36	UNDERGROUND PULLBOX, P3	VAULT 2	1"	P04,P18
COMMUNICATIONS				
CC01	CONTROL BOX 1	PASSENGER SIDE RSP	2"	DET02
CC02	CONTROL BOX 1	PASSENGER SIDE RSP	2"	EMPTY
CC03	RPM 1	VAULT 1	2"	ANN01, RPM02
CC04	RPM 1	VAULT 1	2"	EMPTY
CC05	CONTROL BOX 2	PASSENGER SIDE RSP	2"	DET04
CC06	CONTROL BOX 2	PASSENGER SIDE RSP	2"	EMPTY
CC07	RPM 2	VAULT 2	2"	ANN02, RPM05
CC08	RPM 2	VAULT 2	2"	EMPTY
CC09	CONTROL BOX 3	PASSENGER SIDE RSP	2"	DET06
CC10	CONTROL BOX 3	PASSENGER SIDE RSP	2"	EMPTY
CC11	RPM 3	VAULT 2	2"	ANN03, RPM08
CC12	RPM 3	VAULT 2	2"	EMPTY
CC13	VAULT 2	VAULT 1	3"	C03
CC14	VAULT 2	VAULT 1	3"	EMPTY
CC15	UNDERGROUND PULLBOX, P4	UNDERGROUND PULLBOX, P3	1"	C01,C04
CC16	JUNCTION BOX 1	JUNCTION BOX 3	1"	EMPTY
CC17	JUNCTION BOX 3	JUNCTION BOX 5	1"	EMPTY
CC18	JUNCTION BOX 5	VAULT 2	1"	EMPTY
CC19	JUNCTION BOX 7	JUNCTION BOX 9	1"	EMPTY
CC20	JUNCTION BOX 9	JUNCTION BOX 11	1"	EMPTY
CC21	JUNCTION BOX 11	VAULT 1	1"	EMPTY
CC22	VAULT 1	MAIN BUILDING	3"	EMPTY
CC23	VAULT 1	MAIN BUILDING	3"	EMPTY
CC24	EXISTING CONDUIT	UNDERGROUND PULLBOX, P4	4"	C01,C04
CC25	UNDERGROUND PULLBOX, P4	UNDERGROUND PULLBOX, P3	1"	C01,C04
CC26	UNDERGROUND PULLBOX, P3	VAULT 2	1"	C01,C04

CONDUIT SCHEDULE NOTES:

1. CONTRACTOR TO PROVIDE SEPARATE JUNCTION OR PULL BOXES FOR POWER CONDUIT AND COMMUNICATION OR CONTROL WIRES CONDUIT WITH PROPER IDENTIFICATION AND LABELING.

CABLE SCHEDULE

CABLE NO.	FROM (EQUIP. #)	TO (EQUIP. #)	CABLE TYPE	REMARKS
P01	SOURCE PANEL 1 (1000)	BATTERY BOX 1 (161)	3-#12AWG-THHN OR THWN	
P02	SOURCE PANEL 2 (1000)	BATTERY BOX 2 (161)	3-#12AWG-THHN OR THWN	
P03	SOURCE PANEL 2 (1000)	BATTERY BOX 3 (161)	3-#12AWG-THHN OR THWN	
P04	BRIDGE GATE	WS2-5		
P05	WS2-5	WS2-4	3-#12AWG-THHN OR THWN	EXISTING CIRCUIT
P06	WS2-4	WS1-3	3-#12AWG-THHN OR THWN	EXISTING CIRCUIT
P07	TRAFFIC LIGHT 3	FS2-5	3-#12AWG-THHN OR THWN	
P08	FS2-5	FS2-5A	3-#12AWG-THHN OR THWN	
P09	TRAFFIC LIGHT 2	FS2-4	3-#12AWG-THHN OR THWN	
P10	FS2-4	FS1-4	3-#12AWG-THHN OR THWN	
P11	TRAFFIC LIGHT 1	FS1-3	3-#12AWG-THHN OR THWN	
P12	LED AREA LIGHT	SOURCE PANEL 1,2	3-#12AWG-THHN OR THWN	
P18	PEDESTRIAN SENSOR	SOURCE PANEL 2	3-#12AWG-THHN OR THWN	
P19	LED CANOPY LIGHT	SOURCE PANEL 2	3-#12AWG-THHN OR THWN	
P20	SOURCE PANEL 1 (1000)	DURESS ALARM	3-#12AWG-THHN OR THWN	
P21	SOURCE PANEL 2 (1000)	DURESS ALARM	3-#12AWG-THHN OR THWN	
C01	BRIDGE GATE	WS2-5	COAXIAL, TWISTED PAIR	
C02	WS2-5	WS2-4	COAXIAL, TWISTED PAIR	
C03	WS2-4	WS1-3	COAXIAL, TWISTED PAIR	
C04	PEDESTRIAN SENSOR	WS2-5	3-#12AWG-THHN OR THWN	
BB01	BATTERY BOX 1 (161)	CONTROL BOX 1 (160)	3-#12AWG-THHN OR THWN	
BB02	BATTERY BOX 2 (161)	CONTROL BOX 2 (160)	3-#12AWG-THHN OR THWN	
BB03	BATTERY BOX 3 (161)	CONTROL BOX 3 (160)	3-#12AWG-THHN OR THWN	
ANN01	CONTROL BOX 1 (160)	ANI-3	22 AWG 4-PR, ALPHA 35484	
ANN02	CONTROL BOX 2 (160)	ANI2-4	22 AWG 4-PR, ALPHA 35484	SEE NOTE 5
ANN03	CONTROL BOX 3 (160)	ANI2-5	22 AWG 4-PR, ALPHA 35484	SEE NOTE 5
ANN04	ANI2-5A	ANI2-5	22 AWG 4-PR, ALPHA 35484	SEE NOTE 6
ANN05	ANI-4	ANI2-4	22 AWG 4-PR, ALPHA 35484	SEE NOTE 6
DET01	CONTROL BOX 1 (160)	DRIVER SIDE RSP (110)	22 AWG 4-PR, ALPHA 35484	
DET02	CONTROL BOX 1 (160)	PASSENGER SIDE RSP (110)	22 AWG 4-PR, ALPHA 35484	
DET03	CONTROL BOX 2 (160)	DRIVER SIDE RSP (110)	22 AWG 4-PR, ALPHA 35484	
DET04	CONTROL BOX 2 (160)	PASSENGER SIDE RSP (110)	22 AWG 4-PR, ALPHA 35484	
DET05	CONTROL BOX 3 (160)	LOWER DRIVER SIDE RSP (100)	22 AWG 4-PR, ALPHA 35484	
DET06	CONTROL BOX 3 (160)	LOWER PASSENGER SIDE RSP (100)	22 AWG 4-PR, ALPHA 35484	
DET07	LOWER DRIVER SIDE RSP (100)	UPPER DRIVER SIDE RSP (100)	22 AWG 4-PR, ALPHA 35484	
DET08	LOWER PASSENGER SIDE RSP (100)	UPPER PASSENGER SIDE RSP (100)	22 AWG 4-PR, ALPHA 35484	
DET09	LOWER DRIVER SIDE RSP (100)	UPPER DRIVER SIDE RSP (100)	22 AWG 4-PR, ALPHA 35484	
DET10	LOWER PASSENGER SIDE RSP (100)	UPPER PASSENGER SIDE RSP (100)	22 AWG 4-PR, ALPHA 35484	
GRD01	BATTERY BOX 1 (161)	SPD AT STAND (390)	1-#12 AWG-THHN OR THWN	SEE NOTE 1
GRD02	SPD AT STAND (390)	LOCAL GROUND (756)	6 AWG BARE COPPER	SEE NOTE 2
GRD03	BATTERY BOX 2 (161)	SPD AT STAND (390)	1-#12 AWG-THHN OR THWN	SEE NOTE 1
GRD04	SPD AT STAND (390)	LOCAL GROUND (756)	6 AWG BARE COPPER	SEE NOTE 2
GRD05	BATTERY BOX 3 (161)	SPD AT STAND (390)	1-#12 AWG-THHN OR THWN	SEE NOTE 1
GRD06	SPD AT STAND (390)	LOCAL GROUND (756)	6 AWG BARE COPPER	SEE NOTE 2
RPM01	CONTROL BOX 1 (160)	SPD AT STAND (390)	CAT 6, MOHAWK 58175 ScTP OR FTP	SEE NOTE 3, 8
RPM02	SPD AT STAND (390)	SPD AT MAIN BUILDING (390)	CAT 6, USE HYPERLINE STP4-C6-SOLID-OUTDOOR	SEE NOTE 7, 8
RPM03	SPD AT MAIN BUILDING (390)	ETHERNET SWITCH IN BUILDING (1001)	CAT 6, MOHAWK 58175 ScTP OR FTP	SEE NOTE 3, 8
RPM04	CONTROL BOX 2 (160)	SPD AT STAND (390)	CAT 6, MOHAWK 58175 ScTP OR FTP	SEE NOTE 3, 8
RPM05	SPD AT STAND (390)	SPD AT MAIN BUILDING (390)	CAT 6, USE HYPERLINE STP4-C6-SOLID-OUTDOOR	SEE NOTE 7, 8
RPM06	SPD AT MAIN BUILDING (390)	ETHERNET SWITCH IN BUILDING (1001)	CAT 6, MOHAWK 58175 ScTP OR FTP	SEE NOTE 3, 8
RPM07	CONTROL BOX 3 (160)	SPD AT STAND (390)	CAT 6, MOHAWK 58175 ScTP OR FTP	SEE NOTE 3, 8
RPM08	SPD AT STAND (390)	SPD AT MAIN BUILDING (390)	CAT 6, USE HYPERLINE STP4-C6-SOLID-OUTDOOR	SEE NOTE 7, 8
RPM09	SPD AT MAIN BUILDING (390)	ETHERNET SWITCH IN BUILDING (1001)	CAT 6, MOHAWK 58175 ScTP OR FTP	SEE NOTE 3, 8
SOH01	CONTROL BOX 1 (160)	BATTERY BOX 1 (161)	6 CONDUCTOR FLAT CABLE, ALPHA 1606	SEE NOTE 4
SOH02	CONTROL BOX 2 (160)	BATTERY BOX 2 (161)	6 CONDUCTOR FLAT CABLE, ALPHA 1606	SEE NOTE 4
SOH03	CONTROL BOX 3 (160)	BATTERY BOX 3 (161)	6 CONDUCTOR FLAT CABLE, ALPHA 1606	SEE NOTE 4

CABLE SCHEDULE NOTES:

1. CONNECT BETWEEN GROUND LUG IN BATTERY BOX AND GROUND ON SPD

2. SPD INSTALLED IN LOCKING J-BOX ON STAND AND GROUNDED TO LOCAL GROUND ROD.

3. ALT: BELDEN 7813LC UTP OR BERK-TEK 6NP4P24-S-BK-R-BER-AP OR COMMSCOPE 6P4P24-S-WH-S-CMS-TPCE

4. ALT: 6 CONDUCTOR 26 AWG CABLE ACCEPTABLE. MUST BE ABLE TO INSTALL AN RJ12 CONNECTOR ON EACH END

5. INSTALL IN LOW WORKSTATION IN BOOTH.

6. INSTALL IN HIGH WORKSTATION AND CONNECT TO LOW WORK STATION ANNUNCIATOR FOR LANE 5.

7. ALT: ABA CAT6E ELITE OR PRIMUS CABLE C6CMST 20450K.

8. ALL CABLES INSTALLED IN UNDERGROUD CONDUIT SHALL BE WET LISTED. (MOHAWK CAT 6 OUTSIDE PLANT CABLE OR EQUIVALENT)

9. POWER AND CONTROL WIRES SHALL NOT OCCUPY THE SAME JUNCTION OR PULL BOX.

STATE OF MAINE
DEPARTMENT OF TRANSPORTATION

BR-1004(210)X

PIN 10042.10

BRIDGE NO. ____

BRIDGE PLANS

STATE OF MAINE
MICHAEL A. OLIVER
No.13269
LICENSED
PROFESSIONAL ENGINEER

PROJ. MANAGER	B.L. DORCAS		
DESIGN-DETAILED	BY	DATE	
CHECKED-REVIEWED	TLS	12.JUN.29	SIGNATURE
DESIGN2-DETAILED2	TLS	12.JUN.29	
DESIGN3-DETAILED3	LEF / ALR	12.JUN.29	P.E. NUMBER
REVISIONS 1	LEF / ALR		
REVISIONS 2			DATE
REVISIONS 3			
REVISIONS 4			
FIELD CHANGES			

INTERNATIONAL BRIDGE APPROACH
SAINT JOHN RIVER
FORT KENT AROOSTOOK

ELECTRICAL CONDUIT and CABLE SCHEDULES

SHEET NUMBER

41

OF 81

Filename: $file$ Division: $wkgroup$ Username: $user$ Date:$date$

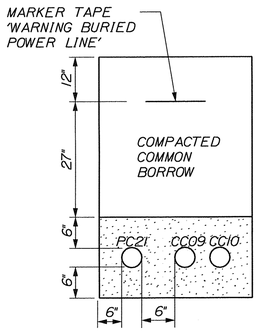

A 39 TRENCH SECTION
NOT TO SCALE

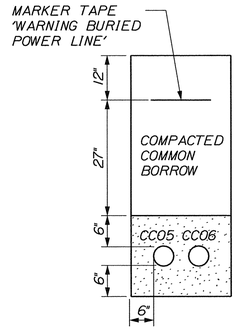

B 39 TRENCH SECTION (TYPICAL)
NOT TO SCALE

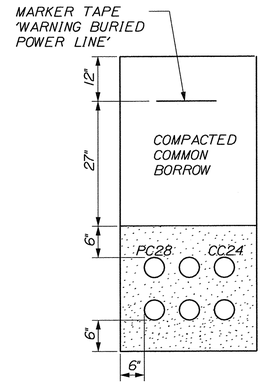

C 39 TRENCH SECTION
NOT TO SCALE

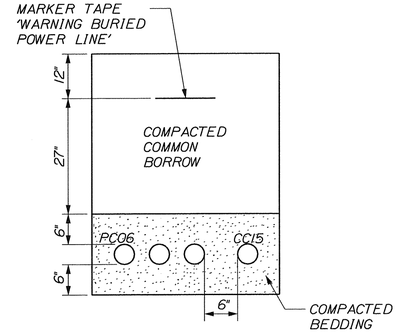

D 39 TRENCH SECTION
NOT TO SCALE

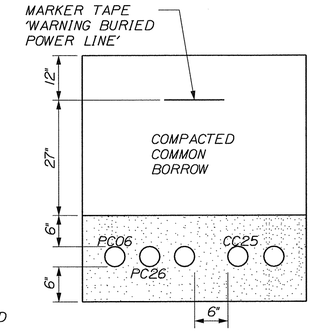

E 39 TRENCH SECTION
NOT TO SCALE

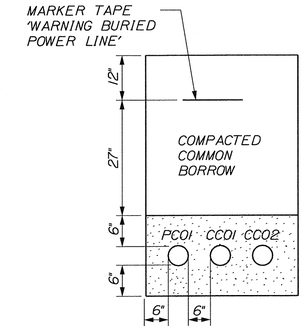

N 39 TRENCH SECTION
NOT TO SCALE

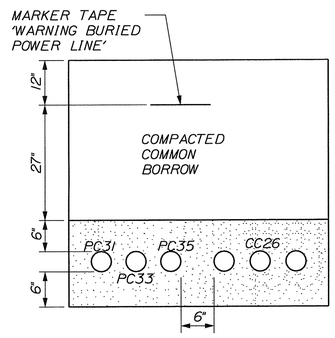

F 39 TRENCH SECTION
NOT TO SCALE

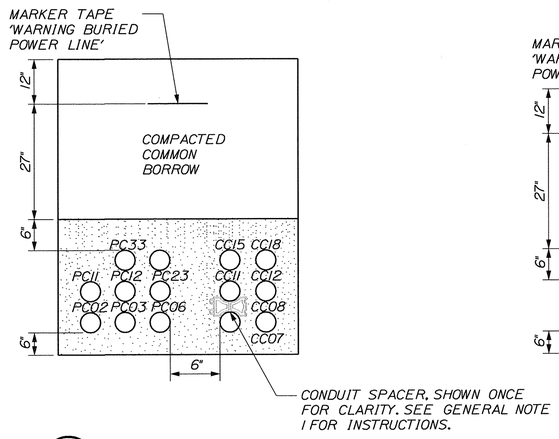

G 39 TRENCH SECTION
NOT TO SCALE

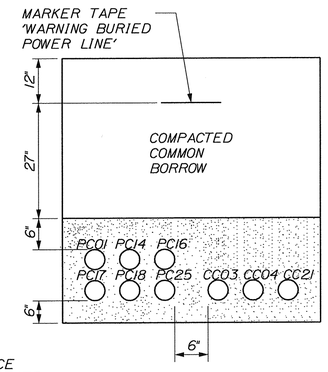

H 39 TRENCH SECTION
NOT TO SCALE

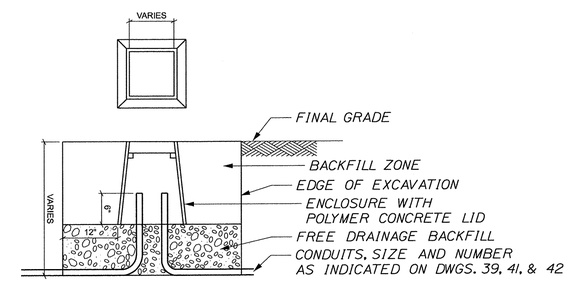

1 39 UNDERGROUND CABLE ENCLOSURE
NOT TO SCALE

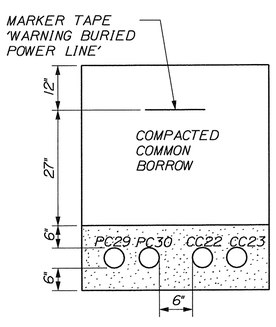

J 39 TRENCH SECTION
NOT TO SCALE

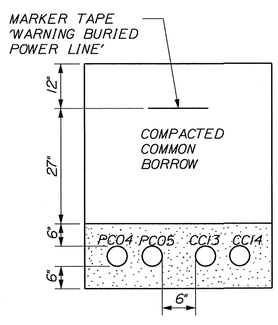

K 39 TRENCH SECTION
NOT TO SCALE

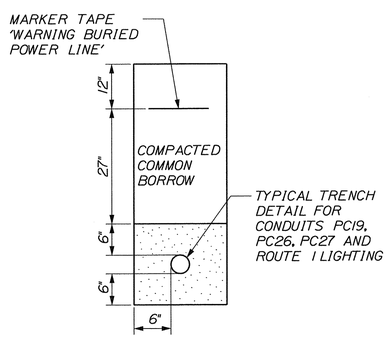

L 33,39 TRENCH SECTION (TYPICAL)
NOT TO SCALE

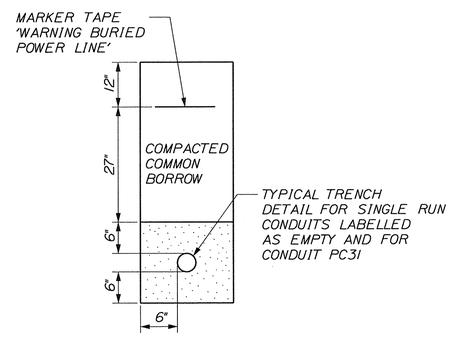

M 39 TRENCH SECTION (TYPICAL)
NOT TO SCALE

GENERAL NOTES:

1. IN TRENCHES WHERE CONDUIT MUST BE STACKED, SPACERS ARE TO BE USED ACCORDING TO MANUFACTURER'S RECOMMENDATIONS.

2. ALL CONDUIT TO BE CONCRETE ENCASED.

3. CONDUITS ARE DRAWN REPRESENTATIVE AND ARE NOT TO SCALE. SEE CONDUIT SCHEDULE ON DWG. 41 FOR SIZES.

4. CONDUITS WITH NO CONDUIT IDs ASSIGNED TO BE RUN AS EMPTY CONDUIT COMPLETE WITH PULL STRINGS AND LABELLED AS SUCH. EMPTY CONDUITS TO BE RUN TO LOCATIONS INDICATED ON DWG. 39.

5. COMPACTED BACKFILL IS TO BE 95% OF A STANDARD PROCTOR.

STATE OF MAINE
DEPARTMENT OF TRANSPORTATION

BR-1004(210)X

PIN 10042.10

BRIDGE PLANS

BRIDGE NO. ____

STATE OF MAINE
MICHAEL A. OLIVER
No. 13269
LICENSED
PROFESSIONAL ENGINEER

		BY	DATE
PROJ MANAGER	B.L. DORCAS		
DESIGN-DETAILED	TLS	TLS	12.JUN.29
CHECKED-REVIEWED	LEF / ALR	LEF / ALR	12.JUN.29
DESIGN2-DETAILED2			
DESIGN3-DETAILED3			
REVISIONS 1			
REVISIONS 2			
REVISIONS 3			
REVISIONS 4			
FIELD CHANGES			

SIGNATURE
P.E. NUMBER
DATE

INTERNATIONAL BRIDGE APPROACH
SAINT JOHN RIVER
FORT KENT AROOSTOOK

ELECTRICAL TRENCH SECTIONS and DETAILS

SHEET NUMBER
42
OF 81

Filename: $file$ Division: $wkgroup$ Username: $user$ Date:$date$

RPM ELECTRICAL NOTES

1. GENERAL

1.1. ALL CONSTRUCTION SHALL MEET OR EXCEED CURRENT INTERNATIONAL BUILDING CODE (ICC-IBC), NATIONAL ELECTRICAL CODE (NFPA 70), ALL RELEVANT LOCAL CODES AND REQUIREMENTS.

1.2. DESIGN DRAWINGS AND STATEMENT OF WORK (SOW) MAY EXCEED CODE REQUIREMENTS AND SHALL TAKE PRECEDENCE.

1.3. VERIFY ALL ABOVE AND BELOW GRADE CONDITIONS AND DIMENSIONS PRIOR TO BEGINNING WORK - DO NOT SCALE DRAWINGS.

1.4. ALL MATERIALS SHALL BE AS SPECIFIED OR EQUAL AS APPROVED BY U.S. GENERAL SERVICES ADMINISTRATION (GSA). INSTALL ALL MATERIALS IN STRICT ACCORDANCE WITH MANUFACTURER'S WRITTEN INSTRUCTIONS.

1.5. ALL SURFACES DAMAGED DURING CONSTRUCTION SHALL BE REPAIRED TO MATCH EXISTING CONDITIONS AND ADJACENT SURFACE FINISH.

1.6. ALL SIGNS SHALL COMPLY WITH CUSTOMS AND BORDER PROTECTION (CBP) SIGN STANDARDS AND MANUAL ON UNIFORM TRAFFIC CONTROL DEVICES (MUTCD) STANDARDS.

1.7. WITH EXCEPTION OF DOT PERMIT (IF REQUIRED), CONTRACTOR SHALL OBTAIN AND PAY FOR ALL REQUIRED PERMITS AND ALL FEES.

2. ELECTRICAL

2.1. ELECTRICAL INSTALLATION SHALL BE IN ACCORDANCE WITH THE LATEST REQUIREMENTS OF THE NATIONAL ELECTRICAL CODE AND SUPPLEMENTED BY THE LOCAL AUTHORITY HAVING JURISDICTION. INSTALLATION WILL BE CHECKED FOR CODE COMPLIANCE AND REWORK WILL BE REQUIRED TO MEET CODE AS NECESSARY.

2.2. CONTRACTOR SHALL PULL AND LABEL ALL WIRES AND CABLES.

2.3. PROVIDE AND INSTALL CORRECT, TYPEWRITTEN, PANEL DIRECTORIES OF NEW OR REVISED PANEL AND/OR SUB-PANEL CIRCUITS.

2.4. PROVIDE AND INSTALL AN ELECTRONICALLY GENERATED OR ENGRAVED ADHESIVE LABEL FOR IDENTIFICATION AT NEW PANELS, SUB-PANELS AND/OR RPM EQUIPMENT AS DIRECTED BY GSA.

2.5. PROVIDE A SEPARATE INDIVIDUAL NEUTRAL CONDUCTOR FOR ALL CIRCUITS INCLUDING RPM CIRCUITS.

3. POWER WIRING

3.1. FOR ALL DRY AND DAMP LOCATIONS USE COPPER WIRE WITH THHN OR THWN INSULATION.

3.2. FOR ALL WET LOCATIONS USE COPPER WIRE WITH THWN INSULATION. INCLUDES ANY CONDUITS INSTALLED IN OR BELOW SLABS.

3.3. MINIMUM WIRE GAUGE FOR RPM POWER CIRCUITS SHALL BE 12 AMERICAN WIRE GAUGE (AWG).

4. SIGNAL CABLE

4.1. CABLING BETWEEN THE CONTROL BOX AND ANNUNCIATORS (INDOOR OR OUTDOOR) OR CONTROL BOX AND RADIATION SENSOR PANELS (RSP) SHALL BE WITH 8 CONDUCTOR (4 TWISTED PAIR) SHIELDED, OUTDOOR RATED COMMUNICATION CABLE WITH DIRECT BURIAL JACKET.

4.2. SIGNAL CABLE IS PROVIDED IN THE CABLE SCHEDULE ON DRAWING 41.

4.3. DATA CABLE HANDLING AND INSTALLATION SHALL BE ACCOMPLISHED BY A TRAINED INSTALLER ONLY.

5. ETHERNET CABLE (CATEGORY 6)

5.1 CONTRACTOR TO VERIFY FINAL RUN LENGTHS IN THE FIELD.

5.2 TERMINATE ALL CAT 6 CABLE WITH AN RJ-45 CONNECTOR. NO SPLICING ALLOWED.

5.3 THE CONTRACTOR SHALL TEST THE CABLES WITH A DTX CABLEANALYZER CABLE TESTER (OR APPROVED EQUIVALENT). DTX CABLEANALYZER IS A REGISTERED TRADEMARK OF FLUKE NETWORKS AND SERVICES.

5.4 APPROVED CABLES CAN BE FOUND IN THE CABLE SCHEDULE ON DRAWING 41.

5.5 ALL CABLES INSTALLED IN CONDUIT IN THE FLOOR SLAB OR BELOW THE FLOOR SLAB SHALL BE OUTDOOR / WET RATED.

6. CONDUIT

6.1. MINIMUM CONDUIT SIZES ARE SHOWN ON DRAWINGS. CONTRACTOR SHALL VERIFY CONDUIT SIZES FOR COMPLIANCE TO NEC BASED ON ACTUAL WIRE RUNS.

6.2. USE SOLVENT GLUED SCHEDULE 40 POLYVINYL CHLORIDE (PVC) PIPE FOR ALL UNDERGROUND RACEWAYS.

6.3. USE RMC FOR ALL WET EXTERIOR ABOVE GRADE RACEWAYS.

6.4. USE RMC FOR ALL TRANSITIONS FROM HORIZONTAL TO VERTICAL STUB-UPS.

6.5. USE RMC FOR ALL EXTERIOR ABOVE GRADE RACEWAYS UNDER CANOPIES.

6.6. USE EMT FOR ALL INTERIOR RACEWAYS.

6.7. COMPRESSION TYPE OUTDOOR RATED FITTINGS SHALL BE USED WITH EMT WHERE EXPOSED TO WEATHER (OUTDOORS).

6.8. PROVIDE PULL STRINGS AND LABELS IN ALL EMPTY CONDUITS. CAP AND MAKE WATERTIGHT ALL EMPTY CONDUITS. ALL EMPTY CONDUIT STUB-UPS SHALL EXTEND 3" ABOVE FINISH SURFACE.

6.9. CONDUIT SHALL BE ROUTED AROUND AND BENEATH ANCHOR BOLT REBAR CAGE AT FOUNDATIONS.

6.10. MYERS HUBS SHALL BE USED FOR ALL CONDUIT PENETRATIONS INTO THE RSP, CONTROL BOX, BATTERY BOX, AND ALL JUNCTION BOXES.

6.11. VAULT LOCATION AND CONDUIT ROUTING MAY BE ADJUSTED BASED ON FIELD CONDITIONS. CONTRACTOR SHALL REFER TO CABLE RUN/POWER RUN TABLES (IF LENGTHS CHANGE) TO MAINTAIN PROPER CABLE/CONDUCTOR SIZES.

7. LIGHTNING PROTECTION

7.1. ALL RPM STANDS SHALL BE EXOTHERMICALLY BONDED AND GROUNDED TO A COPPER OR COPPER COATED STEEL GROUNDING ROD OR PLATE.

7.2. ALL NEW POWER PANELS SHALL BE EQUIPPED WITH INTEGRATED SURGE SUPPRESSION CERTIFIED PER UL1283 AND UL1449, 3rd EDITION. SURGE SUPPRESSION INCORPORATED, SIN WAVE TRACKER.

7.3. RPM SHROUDS ARE INHERENTLY HARDENED AGAINST AFFECTS OF LIGHTNING. NO LIGHTNING ATTRACTION EQUIPMENT (E.G., AIR . TERMINALS) IS REQUIRED.

7.4. SURGE SUPPRESSION DEVICES SHALL BE PROVIDED TO BOTH TERMINATIONS OF EACH ETHERNET CAT 6 CABLE FROM OUTSIDE COMPONENTS.

7.5. CONTRACTOR TO USE 110 PUNCH DOWN BLOCK TOOL TO LAND WIRES TO SPD. SPD TO BE SECURELY MOUNTED AND TIE DOWN CABLES USED TO PREVENT WIRE MOVEMENT.

7.6. FOR OUTDOOR SPD INSTALL IN NEAREST COMMUNICATION JB. DRILL HOLE IN BOTTOM OF WALL OF JB AND INSTALL STRAIN RELIEF CONNECTOR MAINTAINING NEMA 4 RATING OF BOX. ROUTE BARE SOLID OR JACKETED GREEN #6 COPPER GROUNDING WIRE THROUGH STRAIN RELIEF.

7.7. FOR INDOOR SPD GROUND PER MANUFACTURER'S INSTRUCTIONS WITH #6 STRANDED COPPER WIRE TO NEAREST EARTH GROUND.

8. DESIGN CRITERIA

8.1. ELECTRICAL CONDUCTOR SIZE SHALL BE BASED ON A 3.5A MAXIMUM CURRENT DRAW AT 120VAC PER RPM AND SHALL BE SIZED TO PREVENT . A VOLTAGE DROP NOT TO EXCEED 2% FOR FEEDER CIRCUITS AND 3% FOR BRANCH CIRCUITS.

9. HOLD POINTS

9.1. THE RPM CONSTRUCTION PROCESS HAS SPECIFIC STEPS THAT REQUIRE INSPECTION PRIOR TO PROCEEDING TO THE SUBSEQUENT STEP. THE CONTRACTOR SHALL ALLOW FOR INSPECTION AND SUCCESSFUL COMPLETION OF THESE STEPS. FOR A DETAILED DESCRIPTION OF THESE HOLD POINTS, SEE SPECIFICATION SECTION 3 RPM STATEMENT OF WORK.

STATE OF MAINE
DEPARTMENT OF TRANSPORTATION

BR-1004(210)X

PIN 10042.10

BRIDGE NO. ____

BRIDGE PLANS

STATE OF MAINE
MICHAEL A. DUTHER
No.13269
LICENSED
PROFESSIONAL ENGINEER

SIGNATURE

P.E. NUMBER

DATE

PROJ. MANAGER	B.L. DORCAS	BY	DATE
DESIGN-DETAILED	TLS	TLS	12.JUN.29
CHECKED-REVIEWED	LEF / ALR	LEF / ALR	12.JUN.29
DESIGN2-DETAILED2			
DESIGN3-DETAILED3			
REVISIONS 1			
REVISIONS 2			
REVISIONS 3			
REVISIONS 4			
FIELD CHANGES			

INTERNATIONAL BRIDGE APPROACH
SAINT JOHN RIVER
FORT KENT AROOSTOOK

RPM ELECTRICAL NOTES

SHEET NUMBER
43
OF 81

Filename: $file$ Division: $wkgroup$ Username: $user$ Date:$date$

GENERAL NOTES:

1. INFORMATION PROVIDED ON THIS DRAWING WAS PROVIDED BY OTHERS. CONTRACTOR IS TO CONFIRM REQUIREMENTS AND EXACT PLACEMENTS WITH OTHER TRADES AND DRAWINGS IN THIS SET.
2. CONDUIT & WIRE PULL BY CONTRACTOR.
3. PENETRATION & TERMINATION IN DETECTOR PANEL UNDER THE SUPERVISION OF OTHERS.
4. ALL CONDUIT IS 1" UNLESS OTHERWISE NOTED.
5. SPARE CONDUIT STUB UPS NOT SHOWN FOR CLARITY.
6. CONTROL BOX SHALL BE MOUNTED 6'-0" MAX TO TOP OF BOX.
7. CONTROL BOX, BATTERY BOX, AND SOME JUNCTION BOXES EXISTING. MODIFY JUNCTION BOXES ADN CONDUIT AS NEEDED TO COMPLETE INSTALLATION.
7. EXACT CONDUIT QUANTITIES TO BE TAKEN FROM CONDUIT SCHEDULE ON DRAWING 41.

KEYNOTE:

(1) INSTALL CONDUIT BODY ABOVE SHROUD PENETRATION. INSTALL CORD GRIP FACING DOWN. USE MCMASTER-CARR 7807K34. TYPICAL IN FOUR (4) PLACES.

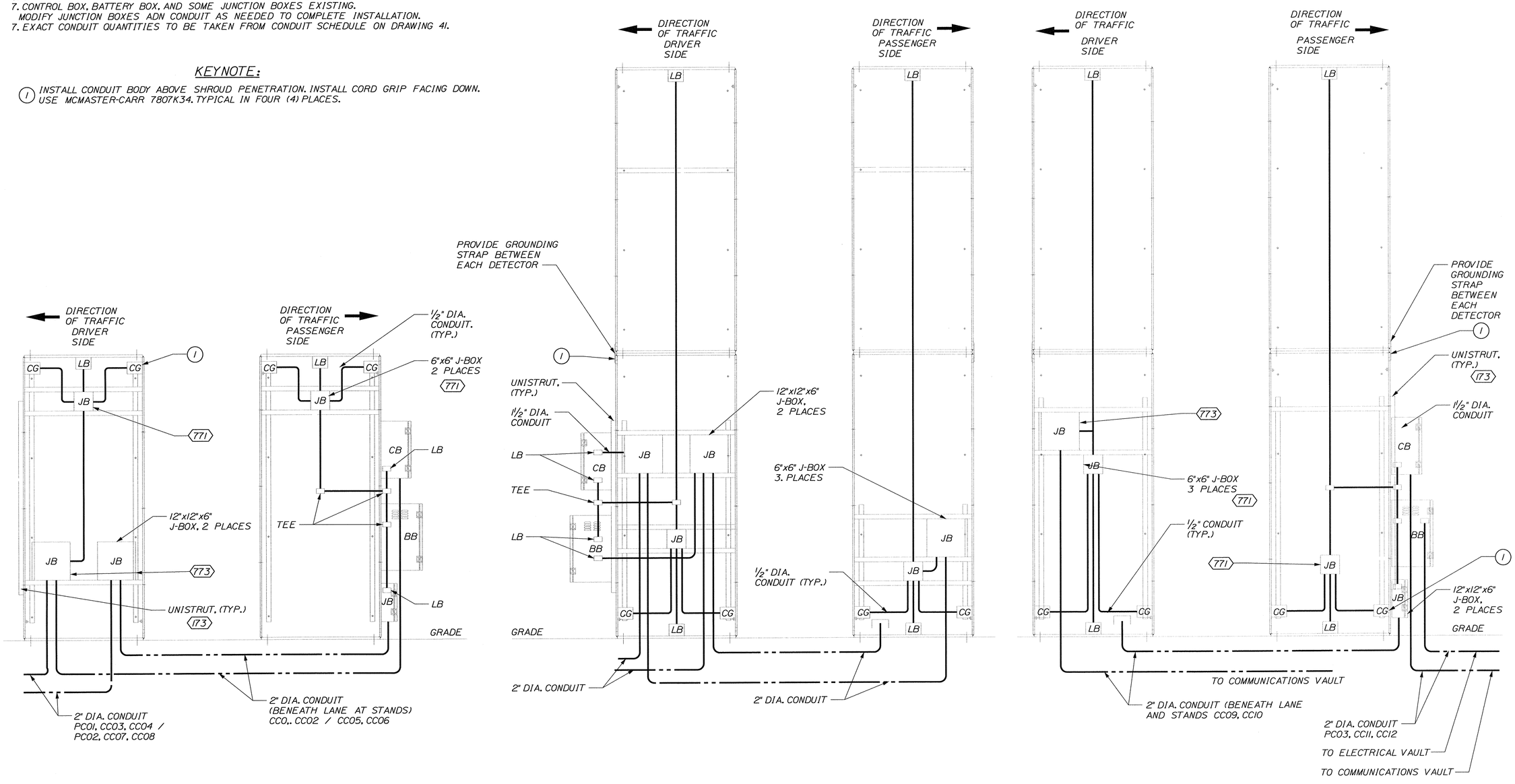

A 38 ELEVATION

B 38 ELEVATION

C 38 ELEVATION

D 38 ELEVATION

E 38 ELEVATION

F 38 ELEVATION

POV RPM 1 CONDUIT ROUTING FOR CB/BB LOCATED ON UPSTREAM PASSENGER STAND

SCALE: 3/4" = 1'-0"

POV/CARGO RPM 2 CONDUIT ROUTING FOR CB/BB LOCATED ON DOWNSTREAM DRIVER STAND

SCALE: 3/4" = 1'-0"

POV/CARGO RPM 3 CONDUIT ROUTING FOR CB/BB LOCATED ON UPSTREAM DRIVER STAND

SCALE: 3/4" = 1'-0"

STATE OF MAINE
DEPARTMENT OF TRANSPORTATION

BR-1004(210)X

PIN 10042.10

BRIDGE NO. ____

BRIDGE PLANS

STATE OF MAINE
MICHAEL A. COMER
No. 13269
LICENSED PROFESSIONAL ENGINEER

PROJ. MANAGER	B.L. DORCAS		
DESIGN-DETAILED	TLS	12 JUN 29	SIGNATURE
CHECKED-REVIEWED	LEF / ALR	12 JUN 29	P.E. NUMBER
DESIGN2-DETAILED2			DATE
DESIGN3-DETAILED3			
REVISIONS 1			
REVISIONS 2			
REVISIONS 3			
REVISIONS 4			
FIELD CHANGES			

INTERNATIONAL BRIDGE APPROACH
SAINT JOHN RIVER
FORT KENT AROOSTOOK

RPM CONDUIT ELEVATIONS

SHEET NUMBER

44

OF 81

Filename: $file$ Division: $wkgroup$ Username: $user$ Date:$date$

GENERAL NOTES:

1. INFORMATION PROVIDED ON THIS DRAWING WAS PROVIDED BY OTHERS. CONTRACTOR IS TO CONFIRM REQUIREMENTS AND EXACT PLACEMENTS WITH OTHER TRADES AND DRAWINGS IN THIS SET.

2. SEE DWG. 40 FOR RPM EQUIPMENT SCHEDULE.

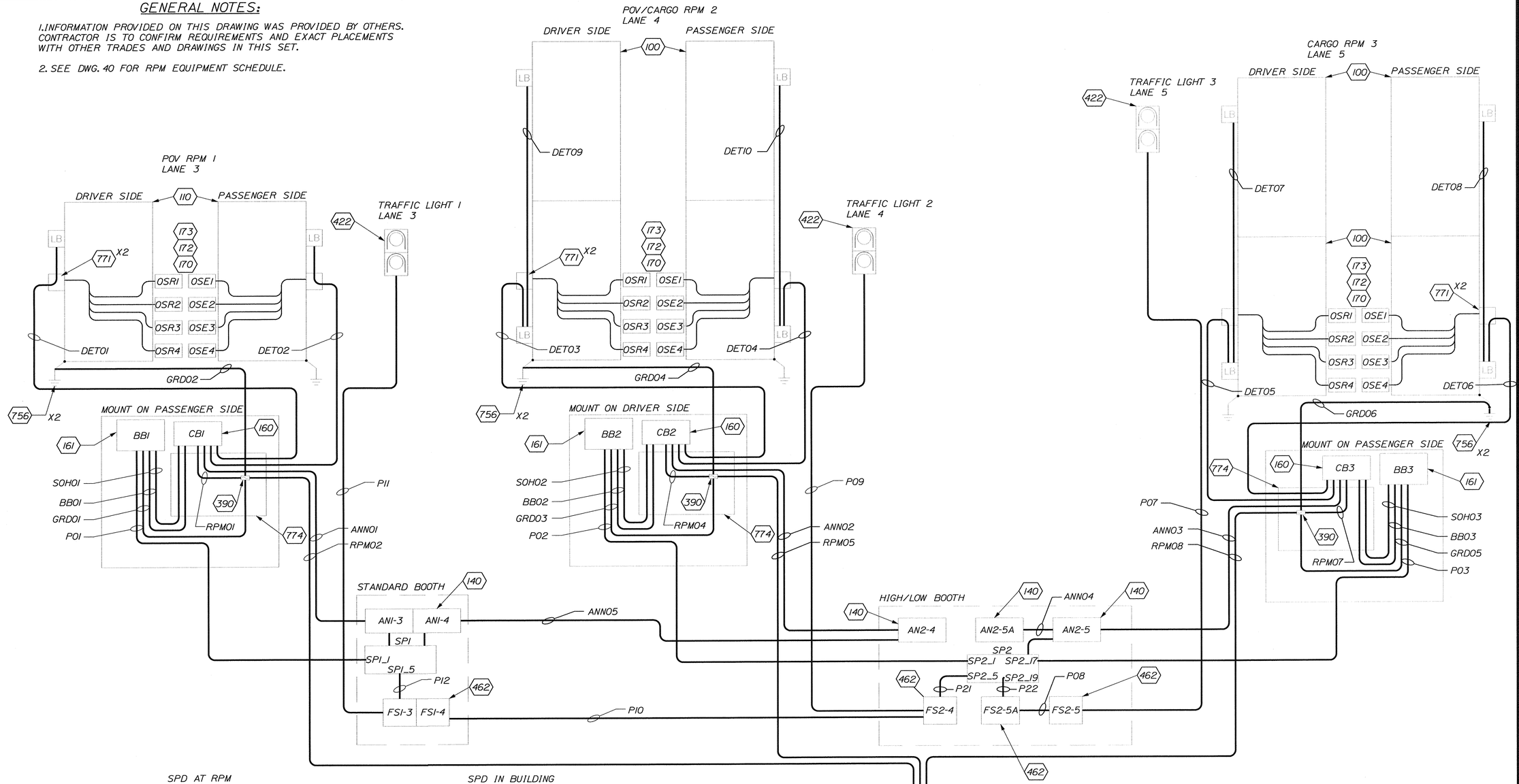

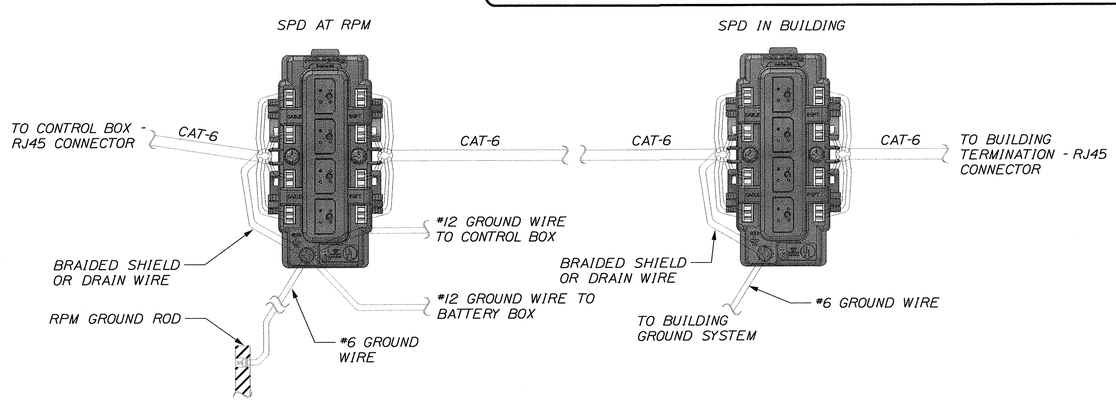

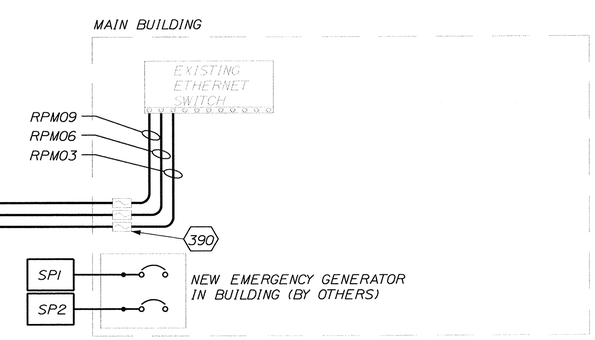

SURGE PROTECTION DEVICE WIRING SCHEMATIC

NOT TO SCALE

STATE OF MAINE
DEPARTMENT OF TRANSPORTATION

BR-1004(210)X

PIN 10042.10

BRIDGE PLANS

BRIDGE NO. ____

MICHAEL A. CULVER
No. 13269
LICENSED PROFESSIONAL ENGINEER

PROJ. MANAGER	B.L. DORCAS		
DESIGN-DETAILED	TLS	TLS	12.JUN.29
CHECKED-REVIEWED	LEF / ALR	LEF / ALR	12.JUN.29
DESIGN2-DETAILED2			
DESIGN3-DETAILED3			
REVISIONS 1			
REVISIONS 2			
REVISIONS 3			
REVISIONS 4			
FIELD CHANGES			

SIGNATURE

P.E. NUMBER

DATE

INTERNATIONAL BRIDGE APPROACH
SAINT JOHN RIVER
FORT KENT AROOSTOOK

RPM WIRING DIAGRAMS

SHEET NUMBER

45

OF 81

Filename: $file$ Division: $wkgroup$ Username: $user$ Date:$date$

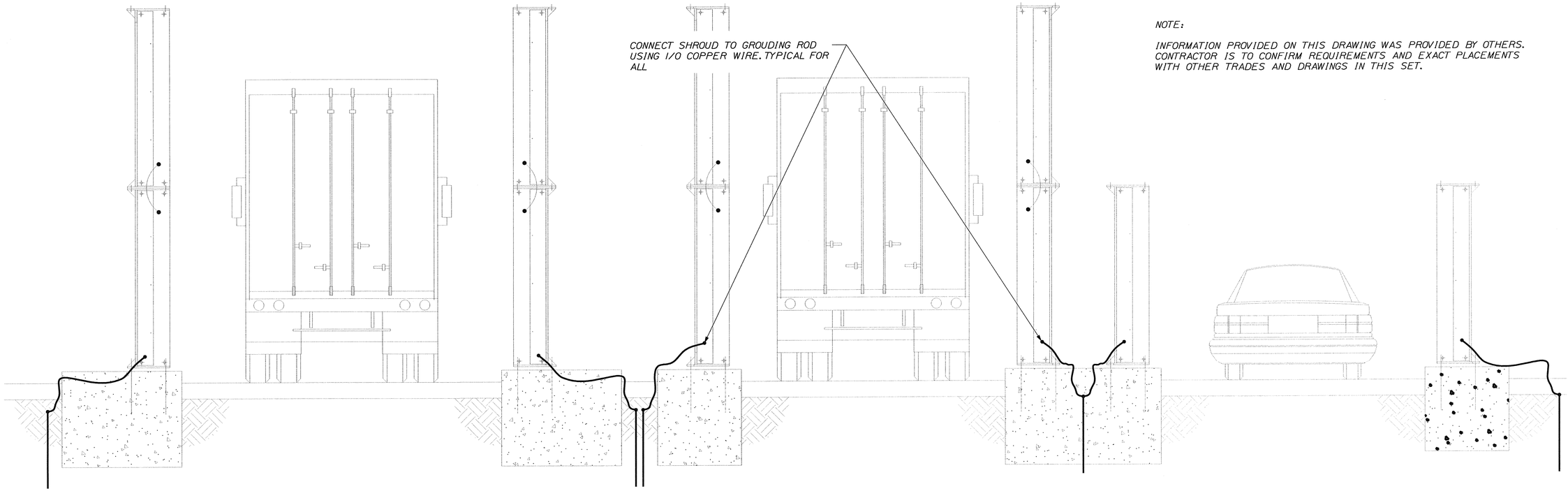

NOTE:

INFORMATION PROVIDED ON THIS DRAWING WAS PROVIDED BY OTHERS. CONTRACTOR IS TO CONFIRM REQUIREMENTS AND EXACT PLACEMENTS WITH OTHER TRADES AND DRAWINGS IN THIS SET.

RPM GROUNDING ELEVATIONS

NOT TO SCALE

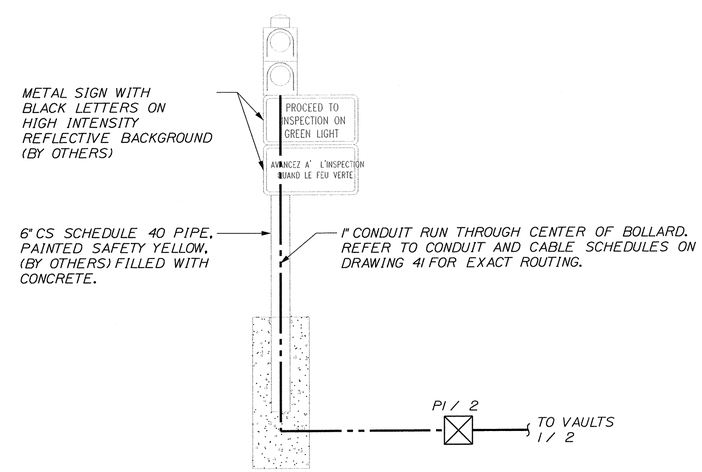

1 / 38 TRAFFIC CONTROL LIGHT CONDUIT DETAIL (TYPICAL)

NOT TO SCALE

STATE OF MAINE
DEPARTMENT OF TRANSPORTATION

BR-1004(210)X

PIN 10042.10

BRIDGE NO. ____ BRIDGE PLANS

STATE OF MAINE MICHAEL A. COLMER No. 13269 LICENSED PROFESSIONAL ENGINEER

PROJ. MANAGER	B.L. DORCAS		
DESIGN-DETAILED	TLS	TLS	12 JUN 29
CHECKED-REVIEWED	LEF / ALR	LEF / ALR	12 JUN 29
DESIGN2-DETAILED2			
DESIGN3-DETAILED3			
REVISIONS 1			
REVISIONS 2			
REVISIONS 3			
REVISIONS 4			
FIELD CHANGES			

P.E. NUMBER

DATE

SIGNATURE

INTERNATIONAL BRIDGE APPROACH
SAINT JOHN RIVER
FORT KENT AROOSTOOK

RPM GROUNDING DETAIL and TRAFFIC LIGHT DETAIL

SHEET NUMBER

46

OF 81

Filename: $file$ Division: $wkgroup$ Username: $user$ Date:$date$

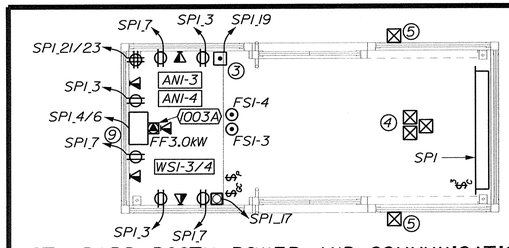

STANDARD BOOTH POWER AND COMMUNICATIONS PLAN

SCALE: 1/2" = 1'-0"

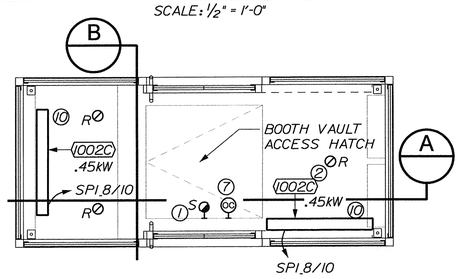

STANDARD BOOTH LIGHTING AND RADIANT HEATING PLAN

SCALE: 1/2" = 1'-0"

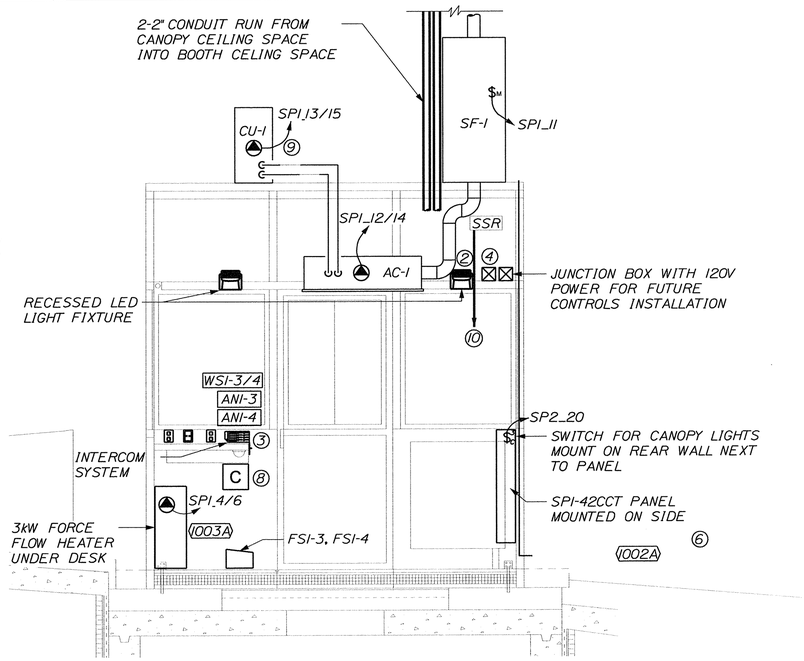

A STANDARD BOOTH SECTION

SCALE: 1/2" = 1'-0"

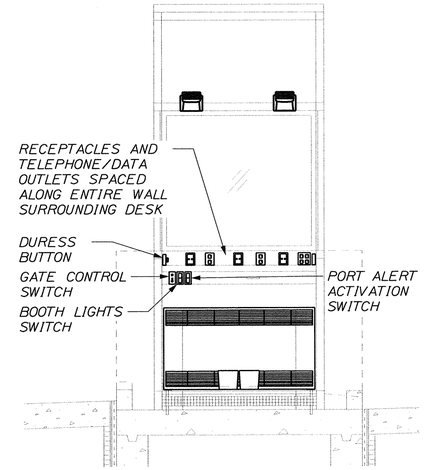

B STANDARD BOOTH SECTION

SCALE: 1/2" = 1'-0"

KEYNOTES:

1. WALL MOUNTED LIGHT LOCATED IN PIT UNDER EACH BOOTH. COORDINATE EXACT LOCATION ON SITE.
2. FINAL LOCATION OF RECESSED FIXTURE TO BE COORDINATED WITH MECHANICAL EQUIPMENT AND DUCTWORK IN CEILING SPACE.
3. DURESS BUTTON TO BE WIRED TO EXISTING BELL IN MAIN CUSTOMS BUILDING.
4. JUNCTION BOX IN BOOTH CEILING SPACE FOR FUTURE CAMERA/MICROPHONE INSTALLATION..
5. JUNCTION BOX MOUNTED ON EXTERIOR OF BOOTH BENEATH WINDOW. ROUTE EMPTY 1" CONDUIT FROM BOX TO BOOTH CEILING SPACE FOR FUTURE MICROPHONE INSTALLATION.
6. BASEBOARD HEATER TO BE WIRED TO SSR IN CEILING SPACE. SSR BY DIVISION 20. TYPICAL FOR ALL.
7. WALL MOUNTED OCCUPANCY SENSOR LOCATED IN VAULT BENEATH EACH BOOTH. SENSOR TO BE POSITION SO THAT WHEN VAULT DOOR IS OPENED, LIGHT TURNS ON.
8. MOUNT PEDESTRIAN SENSOR CHIME TO WALL UNDER DESK. CONNECT TO CCT SPI_26 AND CONTACT IN SENSOR AT GATE.
9. UNITS SHALL BE WIRED WITH #10 WIRING.
10. REFER TO THE MECHANICAL SPECIFICATIONS FOR CONNECTION OF SSR TO HEATING SYSTEM AND COORDINATION WITH CONTROLS CONTRACTOR.

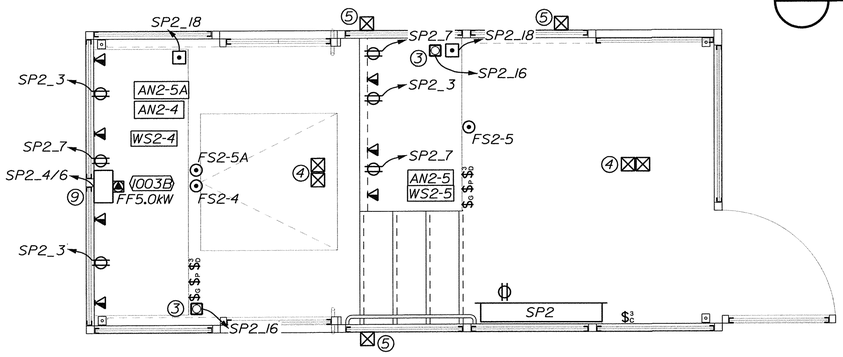

HIGH/LOW BOOTH POWER AND COMMUNICATIONS PLAN

SCALE: 1/2" = 1'-0"

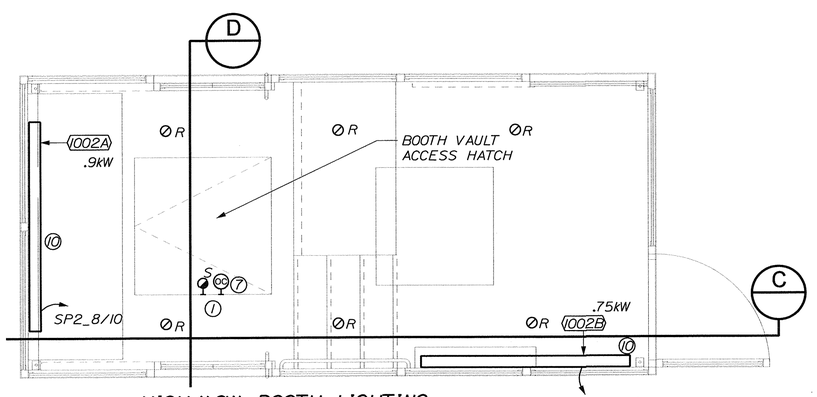

HIGH/LOW BOOTH LIGHTING AND RADIANT HEATING PLAN

SCALE: 1/2" = 1'-0"

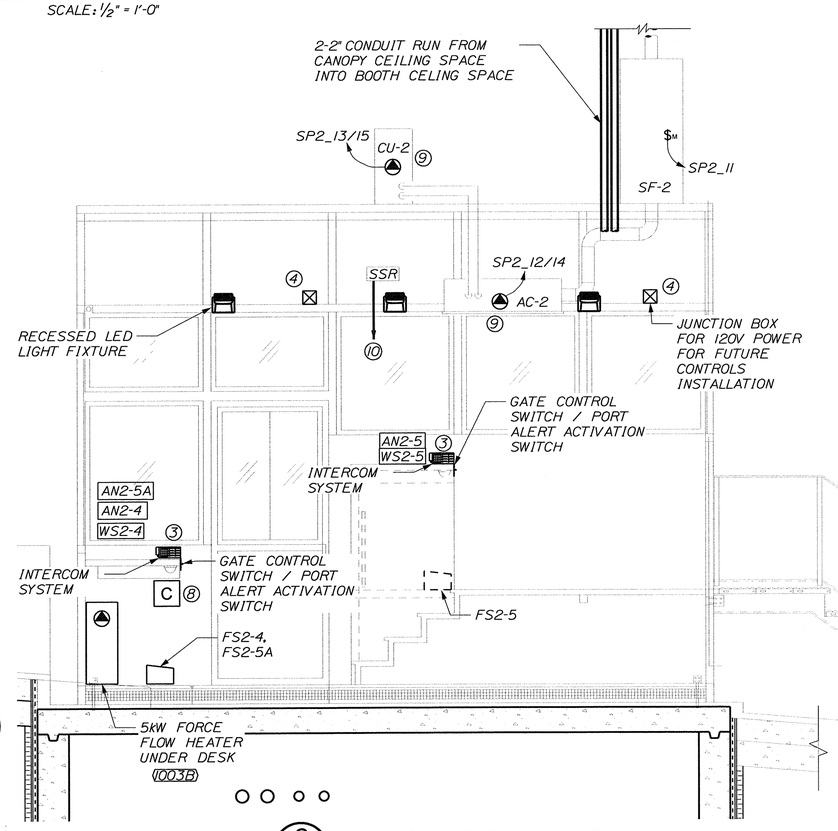

C HIGH/LOW BOOTH SECTION

SCALE: 1/2" = 1'-0"

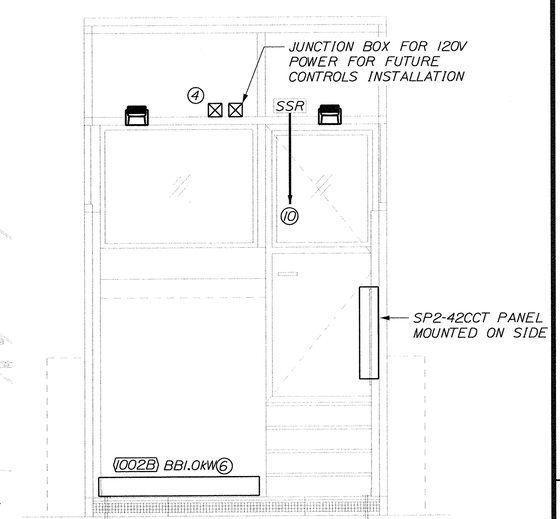

D HIGH/LOW BOOTH SECTION

SCALE: 1/2" = 1'-0"

STATE OF MAINE
DEPARTMENT OF TRANSPORTATION

BR-1004(210)X

PIN 10042.10

BRIDGE NO. ____

BRIDGE PLANS

STATE OF MAINE MICHAEL A. OLIVER No. 13269 LICENSED PROFESSIONAL ENGINEER

PROJ. MANAGER	B.L. DORCAS		
DESIGN-DETAILED	TLS	TLS	12JUN29
CHECKED-REVIEWED	LEF / ALR	LEF / ALR	12JUN29
DESIGN2-DETAILED2			
DESIGN3-DETAILED3			
REVISIONS 1			
REVISIONS 2			
REVISIONS 3			
REVISIONS 4			
FIELD CHANGES			

SIGNATURE

P.E. NUMBER

DATE

INTERNATIONAL BRIDGE APPROACH
SAINT JOHN RIVER
AROOSTOOK
FORT KENT

BOOTH ELECTRICAL PLANS and ELEVATIONS

SHEET NUMBER

47

OF 81

Filename: $file$ Division: $wkgroup$ Username: $user$ Date:$date$

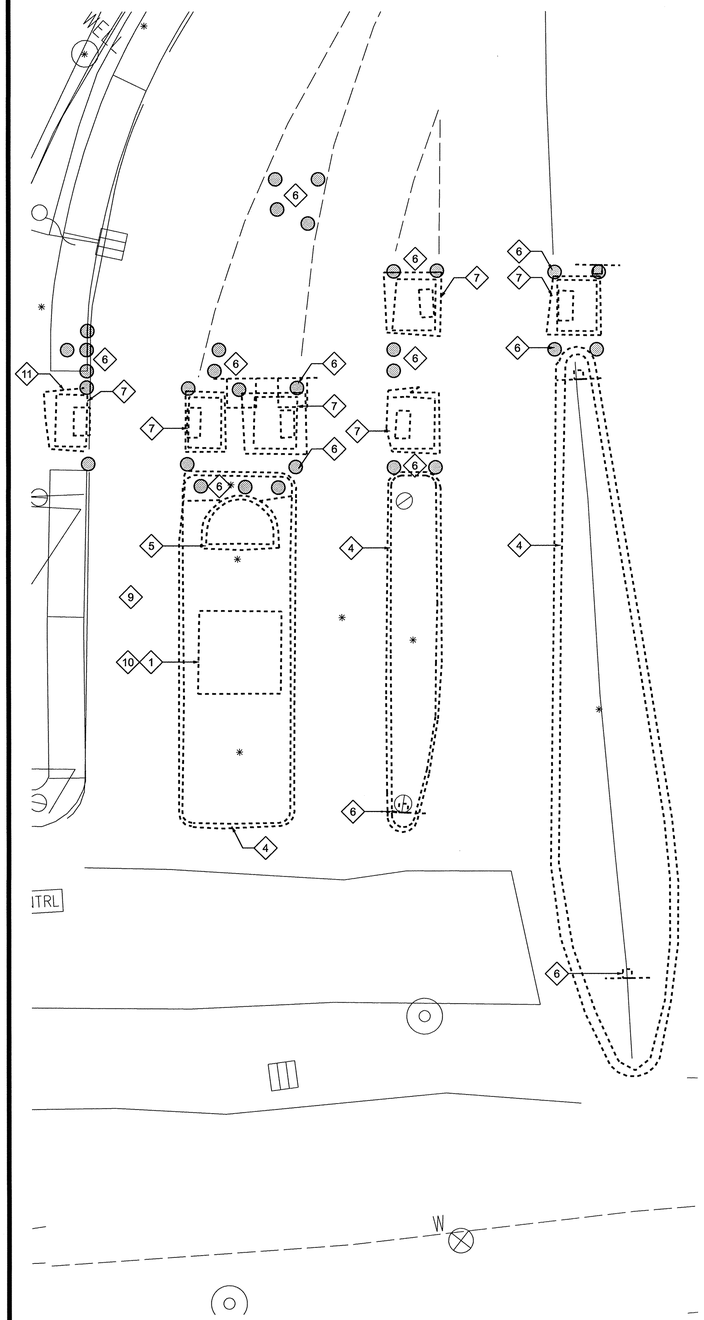

DEMOLITION PLAN

SCALE: 1/8" = 1'-0"

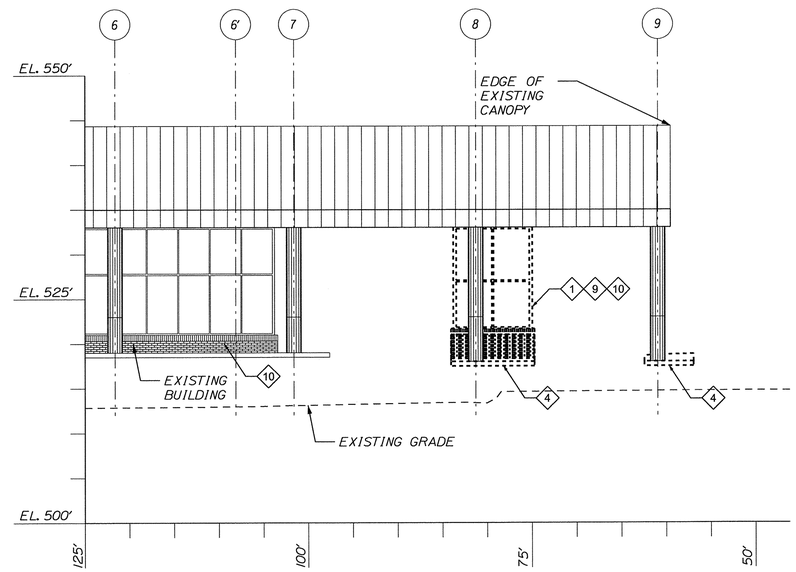

DEMOLITION: SOUTH ELEVATION

SCALE: 1/8" = 1'-0"

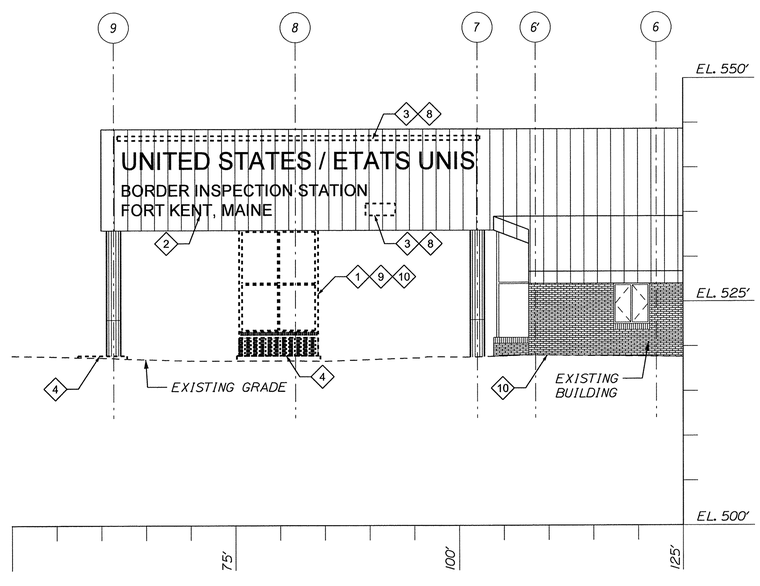

DEMOLITION: NORTH ELEVATION

SCALE: 1/8" = 1'-0"

DEMOLITION LEGEND

-------- EXISTING TO BE REMOVED

GENERAL DEMOLITION NOTES

1. REMOVE ITEMS C/W ALL FASTENERS AND/OR BRACES.
2. COORDINATE REMOVALS WITH ITEMS REMAINING AND NEW WORK WHERE APPLICABLE.
3. MAKE GOOD ALL SURFACES DAMAGED BY REMOVAL OF ITEMS.
4. CONTRACTOR TO COORDINATE REMOVALS WITH OWNER.
5. INFILL OPENING IN EXISTING SOFFIT AS REQUIRED FOR EQUIPMENT REMOVALS.

DEMOLITION KEYNOTES

1. REMOVE BOOTH ENCLOSURE.
2. REMOVE CANOPY SIGNAGE. SEAL AND SECURE ALL PENETRATIONS INTO EXISTING METAL SIDING.
3. REMOVE FRONT CANOPY LIGHTING. TURN OVER TO OWNER. SEAL AND SECURE ALL PENETRATIONS INTO EXISTING METAL SIDING. LIGHTING BELOW CANOPY TO REMAIN.
4. REMOVE CURBING.
5. REMOVE CONCRETE CRASH BARRIER.
6. REMOVE CONCRETE BOLLARDS AND SIGN POSTS. SEE SPEC FOR QUANTITY.
7. REMOVE AND SECURE SPECIAL SYSTEMS:
   - LPR (LICENCE PLATE READER) IN COORDINATION WITH OWNER AND OIT. STORE AS REQUIRED.
   - RPM (RADIATION PORTAL MONITOR) IN COORDINATION WITH OWNER AND PNNL (PACIFIC NORTHWEST NATIONAL LABORATORY)
   - SECURITY CAMERAS, REMOVE AND SECURE CAMERAS AS PER DWG. #40 & 41 FOR REINSTALLATION. ACCESSIBLE BOXES TO BE USED FOR EXTENDING SYSTEM.
   - REMOVE CONDUIT AND WIRING AND TERMINATE IN NEW BOX IN ATTIC. SEE DWG. # 35.
8. REMOVE WIRING AND CONDUIT BACK TO BUILDING INTERIOR ATTIC AND TERMINATE IN NEW BOX. SEE DWG. # 35.
9. REMOVE POWER, COMMUNICATION WIRING, AND CONDUIT TO BOOTH. TERMINATE IN NEW BOX IN ATTIC. SEE DWG. # 35.
10. REMOVE EXISTING HYDRONIC SUPPLY AND RETURN PIPES FROM EXISTING BOOTH. TERMINATE AND CAP PIPES AT BOOTH FOUNDATION. REMOVE OBSOLETE SUPPLY AND RETURN PIPES DESIGNATED TO BOOTH LOOP FROM MAIN BUILDING. TERMINATE AND CAP PIPES AT MAIN BUILDING FOUNDATION AND WHERE THE BOOTH LOOP PIPES CONNECT WITH THE MAIN HEATING LOOP. UNDERGROUND PIPES TO REMAIN AND LEFT ABANDONED. ANY EQUIPMENT DESIGNATED TO THE BOOTH LOOP LOCATED IN THE MAIN BUILDING (RECIRCULATION PUMP, HEAT EXCHANGER, ETC.) SHALL BE PRESERVED AND HANDED OVER TO THE OWNER.
11. REMOVE METAL RAILING.

STATE OF MAINE
DEPARTMENT OF TRANSPORTATION

BR-1004(210)X

PIN 10042.10

BRIDGE PLANS

BRIDGE NO. ____

STATE OF MAINE
BRIAN L. DORCAS
No.9483
PROFESSIONAL ENGINEER

P.E. NUMBER

12-06-20
DATE

SIGNATURE

PROJ. MANAGER	B.L. DORCAS		
DESIGN-DETAILED	SDS	AM	12.JUN.29
CHECKED-REVIEWED	SDS	RWS2	12.JUN.29
DESIGN2-DETAILED2	SDS		
DESIGN3-DETAILED3			
REVISIONS 1			
REVISIONS 2			
REVISIONS 3			
REVISIONS 4			
FIELD CHANGES			

INTERNATIONAL BRIDGE APPROACH
SAINT JOHN RIVER
FORT KENT AROOSTOOK

DEMOLITION

SHEET NUMBER

48

OF 81

Filename: $file$ Division: $wkgroup$ Username: $user$ Date:$date$

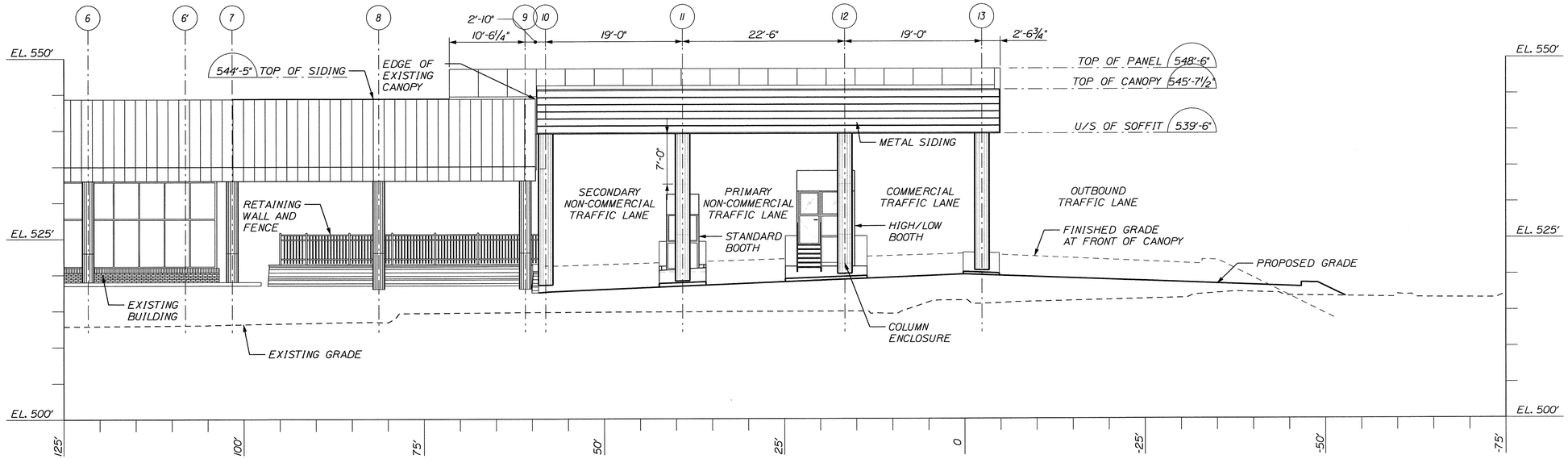

A 16 CANOPY: SOUTH ELEVATION

SCALE: 1/8" = 1'-0"

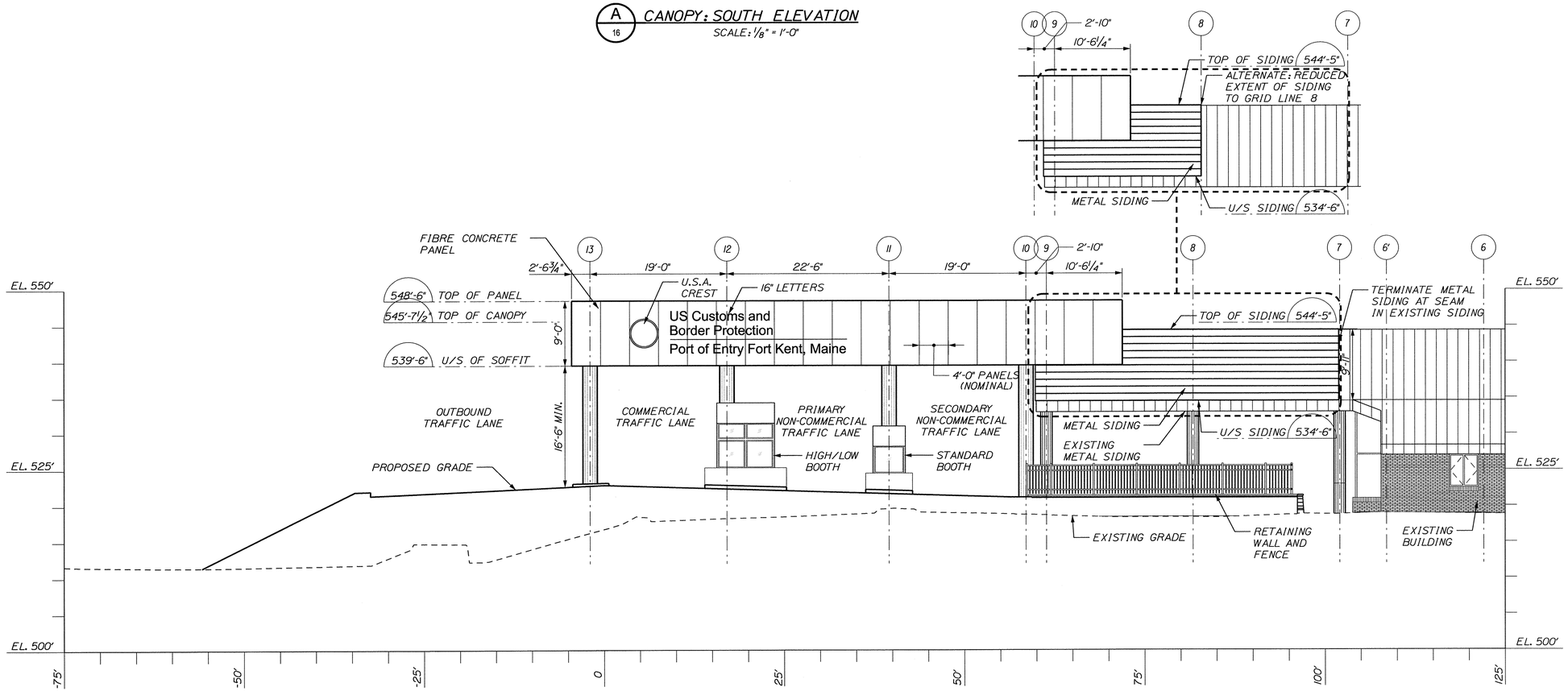

B 16 CANOPY: NORTH ELEVATION

SCALE: 1/8" = 1'-0"

STATE OF MAINE
DEPARTMENT OF TRANSPORTATION

BR-1004(210)X

PIN 10042.10

BRIDGE PLANS

BRIDGE NO. ____

STATE OF MAINE
BRIAN L. DORCAS
No.9463
LICENSED
PROFESSIONAL ENGINEER

P.E. NUMBER

12-06-20
DATE

SIGNATURE

		BY	DATE
PROJ. MANAGER	B.L. DORCAS		
DESIGN-DETAILED	SDS	AM	12.JUN.29
CHECKED-REVIEWED	SDS	RWS2	12.JUN.29
DESIGN2-DETAILED2			
DESIGN3-DETAILED3			
REVISIONS 1			
REVISIONS 2			
REVISIONS 3			
REVISIONS 4			
FIELD CHANGES			

INTERNATIONAL BRIDGE APPROACH
SAINT JOHN RIVER
FORT KENT
AROOSTOOK

CANOPY ELEVATIONS

SHEET NUMBER

49

OF 81

Filename: $file$ Division: $wkgroup$ Username: $user$ Date:$date$

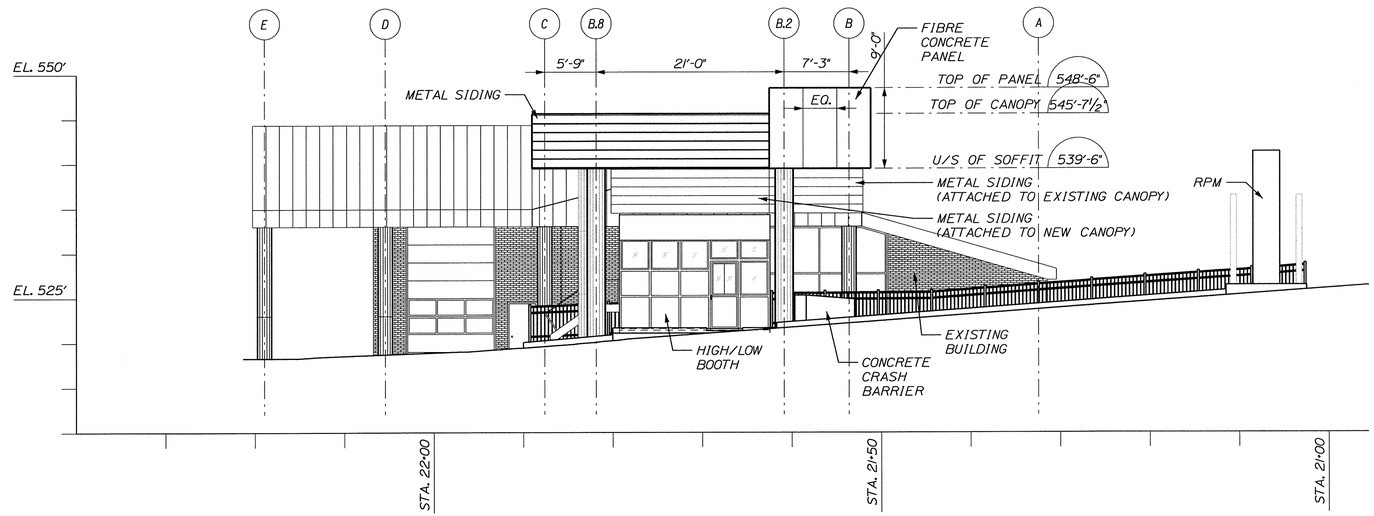

C 16 CANOPY: EAST ELEVATION

SCALE: 1/8" = 1'-0"

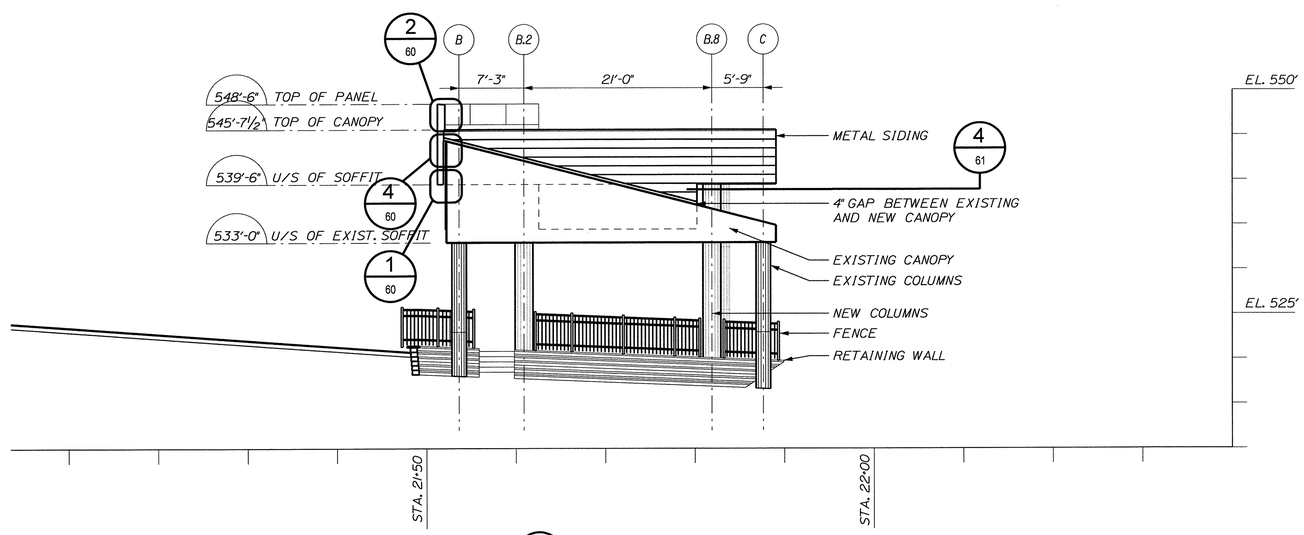

D 16 CANOPY: WEST ELEVATION

SCALE: 1/8" = 1'-0"

STATE OF MAINE
DEPARTMENT OF TRANSPORTATION

BR-1004(210)X

PIN 10042.10

BRIDGE PLANS

BRIDGE NO. ____

STATE OF MAINE BRIAN L. DORCAS No.9465 LICENSED PROFESSIONAL ENGINEER

P.E. NUMBER

12-06-29

DATE

		BY	DATE
PROJ. MANAGER	B.L. DORCAS		
DESIGN-DETAILED	SDS	AM	12.JUN.29
CHECKED-REVIEWED	SDS	RWS2	12.JUN.29
DESIGN-DETAILED2	SDS		
DESIGN-DETAILED3			
REVISIONS 1			
REVISIONS 2			
REVISIONS 3			
REVISIONS 4			
FIELD CHANGES			

SIGNATURE

INTERNATIONAL BRIDGE APPROACH
SAINT JOHN RIVER
FORT KENT AROOSTOOK

CANOPY ELEVATIONS

SHEET NUMBER

50

OF 81

Filename: $file$ Division: $wkgroup$ Username: $user$ Date:$date$

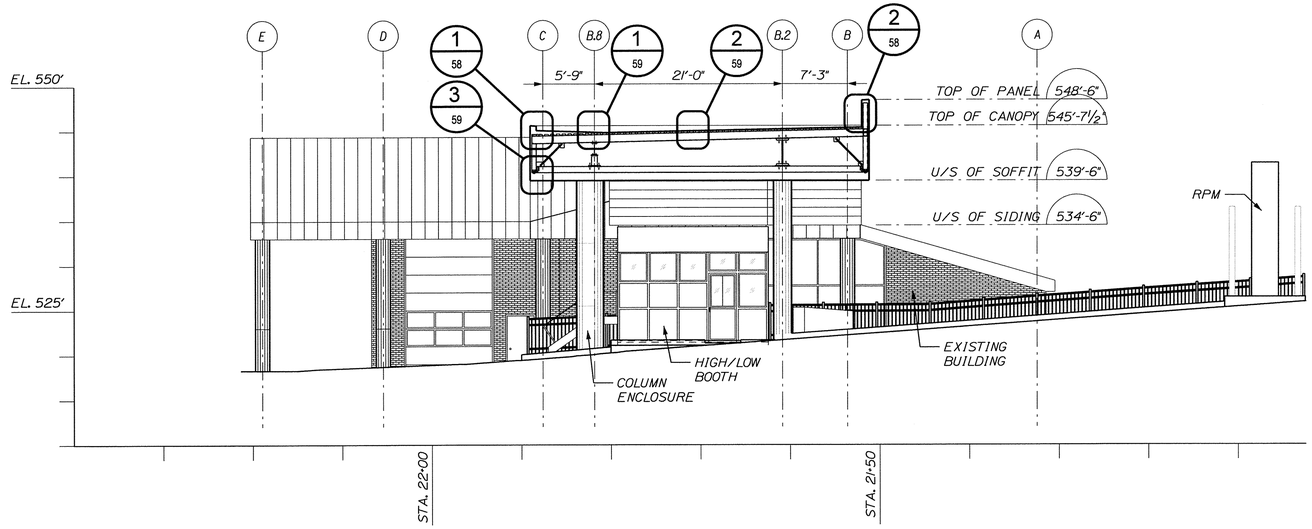

E 16 CANOPY SECTION AT HIGH/LOW BOOTH

SCALE: 1/8" = 1'-0"

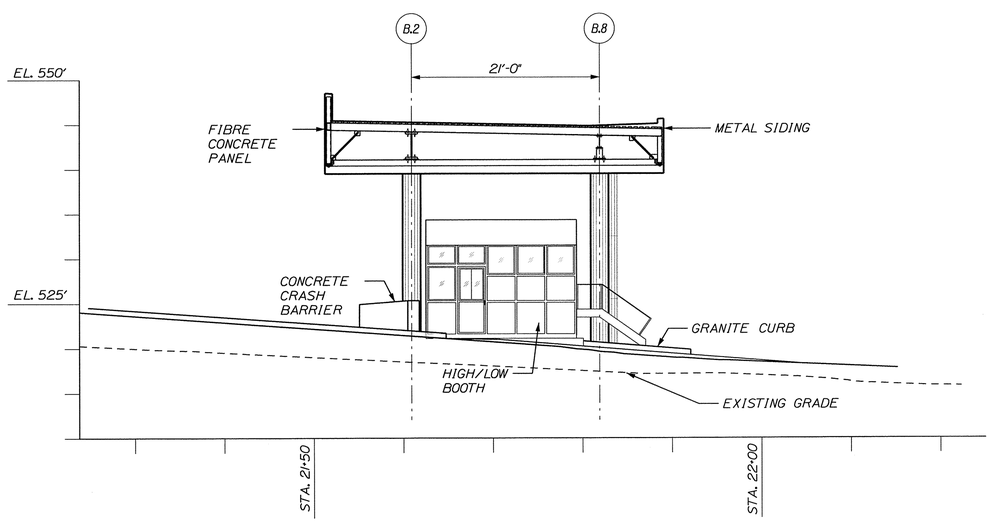

F 16 CANOPY SECTION AT HIGH/LOW BOOTH

SCALE: 1/8" = 1'-0"

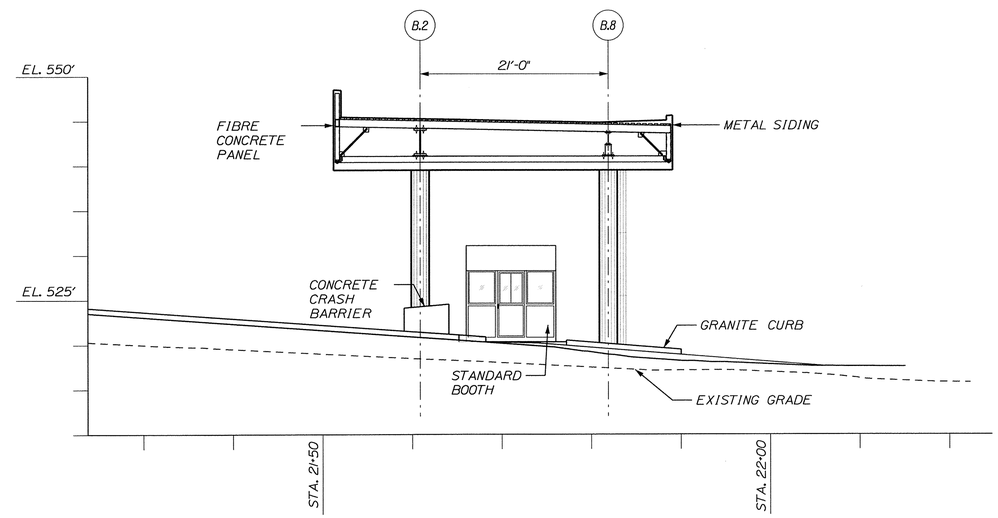

G 16 CANOPY SECTION AT STANDARD BOOTH

SCALE: 1/8" = 1'-0"

STATE OF MAINE
DEPARTMENT OF TRANSPORTATION

BR-1004(210)X

PIN 10042.10

BRIDGE PLANS

BRIDGE NO. ____

STATE OF MAINE
BRIAN L. DORCAS
No. 9493
PROFESSIONAL ENGINEER

P.E. NUMBER
12-06-29
DATE

SIGNATURE

PROJ. MANAGER B.L. DORCAS	BY	DATE
DESIGN-DETAILED SDS	AM	12_JUN_29
CHECKED-REVIEWED SDS	RWS2	12_JUN_29
DESIGN2-DETAILED2 SDS		
DESIGN3-DETAILED3		
REVISIONS 1		
REVISIONS 2		
REVISIONS 3		
REVISIONS 4		
FIELD CHANGES		

INTERNATIONAL BRIDGE APPROACH
SAINT JOHN RIVER
FORT KENT AROOSTOOK

CANOPY SECTIONS

SHEET NUMBER

51

OF 81

Filename: $file$ Division: $wkgroup$ Username: $user$ Date: $date$

METAL DECK SCHEDULE						
LOCATION	TYPE	SIZE	WELDING		SIDE LAP CONNECTIONS	NOTES AND COMMENTS
			TRANS.	LONG.		
ROOF T.O.S. EL.	CANAM P-3606	1½" x 0.036"	36/7 (7/SHEET)	12" c/c	#10 SCREWS @ 12" c/c	-

NOTES:
1. ALL DECK AT PERIMETER OF BUILDING TO BE WELDED OR FASTENED @ 12" c/c MAX. U.N.O.
2. ALL WELDS TO BE ¾" DIA. ARC SPOT WELDS IN ACCORDANCE WITH AISI S100
3. ALL METAL DECK TO BE THREE SPAN CONTINUOUS MINIMUM U.N.O.
4. DO NOT ATTACH MECHANICAL, ELECTRICAL OR OTHER SERVICES TO METAL DECK.
5. TWO WELDS AT DECK OVERLAP TYPICAL.
6. PROVIDE 'C' EDGE STRIPS AT PERIMETER OF BUILDING.
7. METAL DECK TO BE INSTALLED TRANSVERSE TO THE SPAN OF SUPPORTING STEEL, U.N.O.
8. ALL UNSUPPORTED EDGES OF DECKING TO BE SUPPORTED WITH L 3"x3"x1/4" U.N.O.
9. FIELD WELD CONTINUOUS BENT PLATE (OR ANGLES) BUTT JOINTS WITH FULL PENETRATION WELD, TYP.
10. DECK SHALL HAVE GALVANIZED COATING IN ACCORDANCE TO STANDARD ASTM A 653 M.

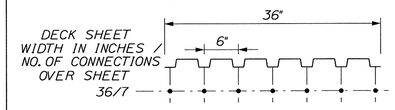

METAL DECK SUPPORT PATTERN DETAIL

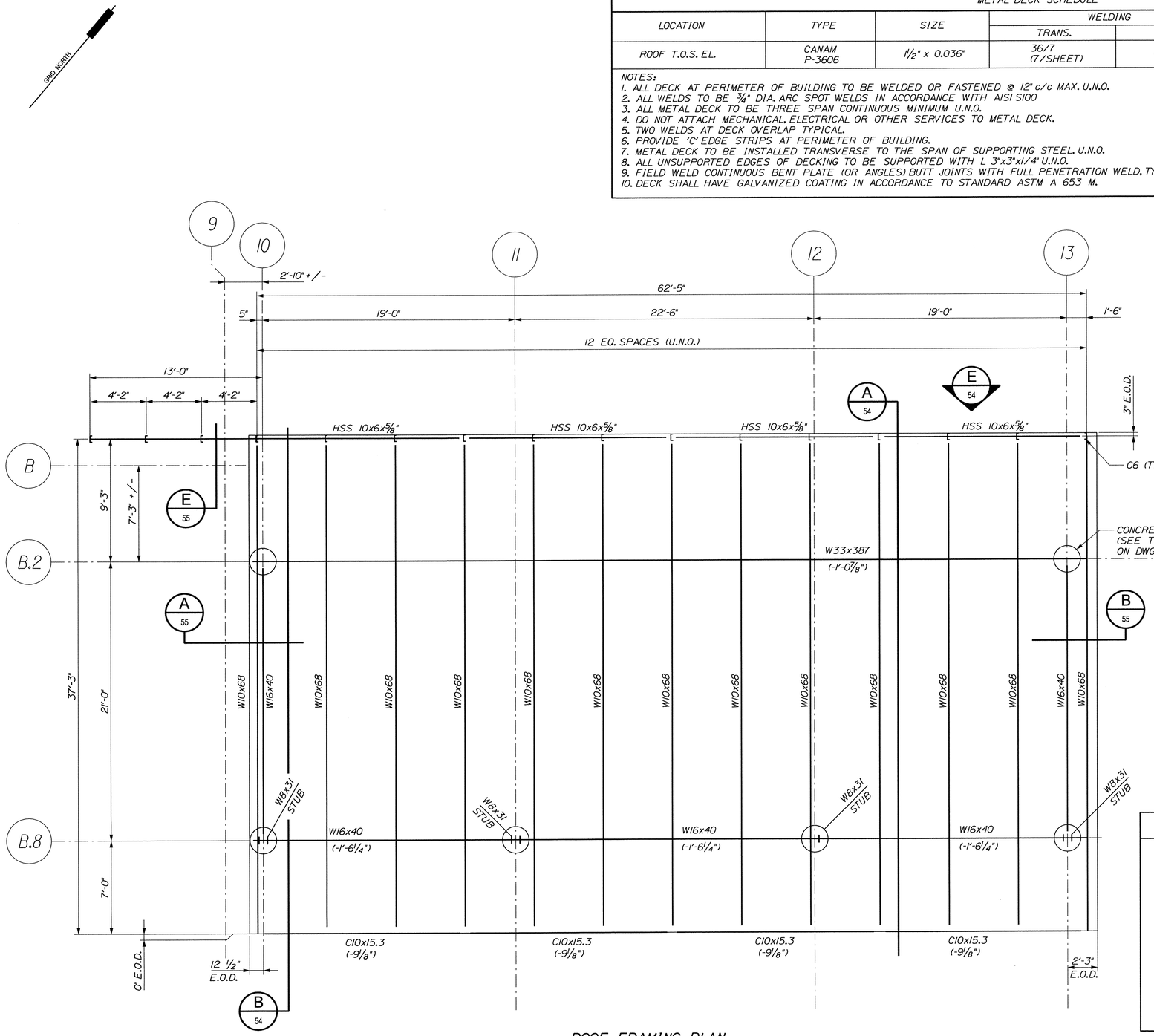

ROOF FRAMING PLAN
(T.O.S. EL. 545'-2¾" (TYP. U.N.O.)
SCALE: ¼" = 1'-0"

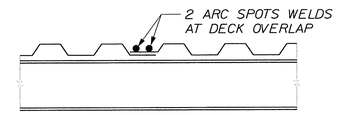

TYPICAL WELD AT DECK OVERLAP
NOT TO SCALE

GENERAL NOTES:

1. STRUCTURAL STEEL GRADES:
   - W SHAPES = ASTM A992
   - HSS SHAPES = ASTM A500 GRADE C
   - ALL OTHERS = ASTM A572 GRADE 42 EXCEPT THAT COLUMN REINFORCEMENT IS TO BE ASTM A572 GRADE 50.
2. COLUMN REINFORCING PLATE TO BE ATTACHED BY CONTINUOUS ¼" FILLET WELD AT FLANGE/PLATE INTERFACE.

STRUCTURAL DESIGN CRITERIA

ROOF LOADS:
DEAD LOAD = 25.1 psf (EXCLUDES SELF WEIGHT OF STRUCT. STEEL)
SNOW LOAD = 75.6 psf

WIND DATA:
WIND SPEED = 90 mph
Iw = 1.00
SURFACE ROUGHNESS = C

SEISMIC DATA
- Sa (0.2) = 0.358
- Sa (1.0) = 0.105
SITE CLASS = D
- Fa = 1.49
- Fv = 2.02
- R = 3.00
- Ωo = 3.00
- Cd = 3.00
- Ie = 1.00
- Ta = 0.134 SECS

CODES AND STANDARDS
- INTERNATIONAL BUILDING CODE 2006.
- REINFORCED CONCRETE DESIGN TO ACI-318-05
- AISC MANUAL OF STEEL CONSTRUCTION 13th EDITION.
- SEISMIC DESIGN CATERGORY = C

STATE OF MAINE
DEPARTMENT OF TRANSPORTATION

BR-1004(210)X

PIN 10042.10

BRIDGE PLANS

BRIDGE NO. ____

STATE OF MAINE BRIAN L. DORCAS No.9463 PROFESSIONAL ENGINEER

P.E. NUMBER 12-06-20 DATE

SIGNATURE

		BY	DATE
PROJ. MANAGER	B.L. DORCAS		
DESIGN-DETAILED	AEC	AEC	12.JUN.29
CHECKED-REVIEWED	CMB	RWS2	12.JUN.29
DESIGN2-DETAILED2			
DESIGN3-DETAILED3			
REVISIONS 1			
REVISIONS 2			
REVISIONS 3			
REVISIONS 4			
FIELD CHANGES			

INTERNATIONAL BRIDGE APPROACH
SAINT JOHN RIVER
FORT KENT AROOSTOOK

CANOPY STRUCTURAL STEEL
ROOF FRAMING PLAN
and METAL DECK SCHEDULE

SHEET NUMBER
52
OF 81

Filename: $file$ Division: $wkgroup$ Username: $user$ Date:$date$

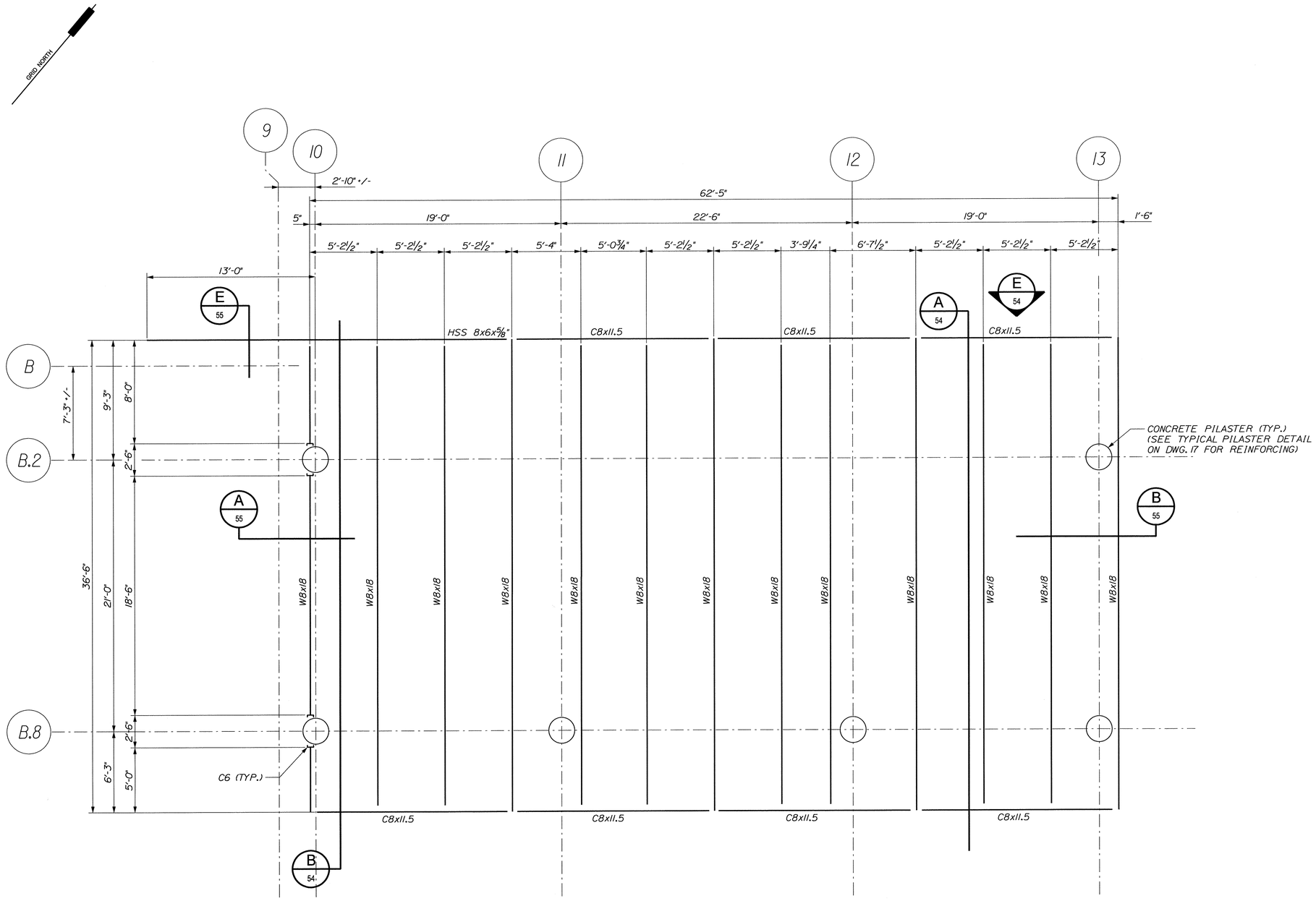

CEILING FRAMING PLAN
(U/S STEEL EL. 540'-4 3/4" TYP.)
SCALE: 1/4" = 1'-0"

STATE OF MAINE
DEPARTMENT OF TRANSPORTATION

BR-1004(210)X

PIN 10042.10

BRIDGE NO. ____

BRIDGE PLANS

STATE OF MAINE
BRIAN L. DORCAS
No. 9463
LICENSED
PROFESSIONAL ENGINEER

B. L. Dorcas
SIGNATURE

P.E. NUMBER
12-06-29
DATE

		BY	DATE
PROJ. MANAGER	B.L. DORCAS		
DESIGN-DETAILED	CMB	AEG	12.JUN.29
CHECKED-REVIEWED		RWS2	12.JUN.29
DESIGN-DETAILED2			
DESIGN-DETAILED3			
REVISIONS 1			
REVISIONS 2			
REVISIONS 3			
REVISIONS 4			
FIELD CHANGES			

INTERNATIONAL BRIDGE APPROACH
SAINT JOHN RIVER
FORT KENT AROOSTOOK

CANOPY STRUCTURAL STEEL
CEILING FRAMING PLAN

SHEET NUMBER
53
OF 81

Filename: $file$ Division: $wkgroup$ Username: $user$ Date:$date$

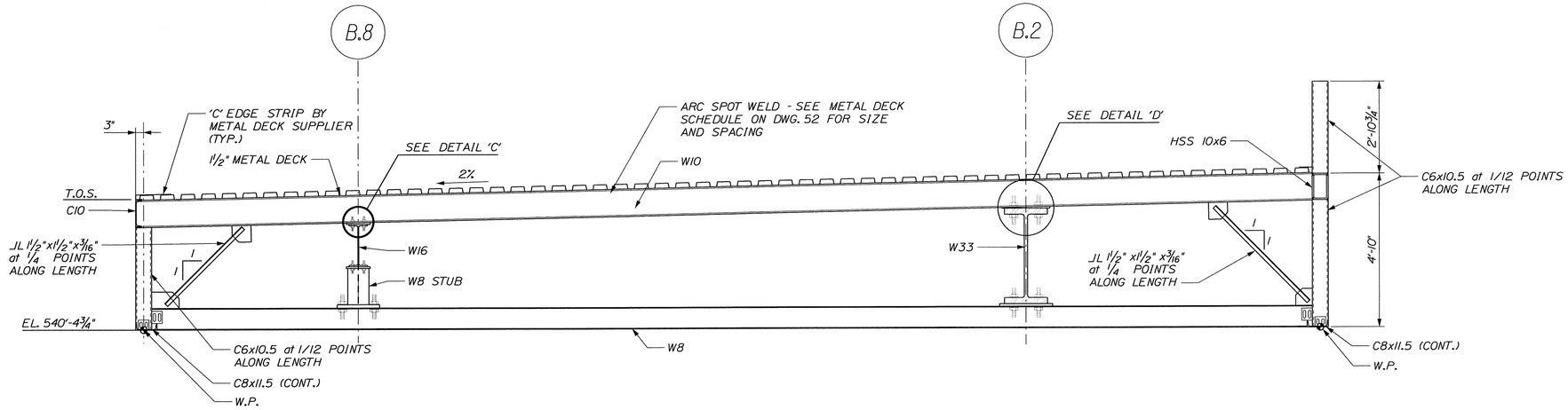

A 52,53 SECTION
½"=1'-0"

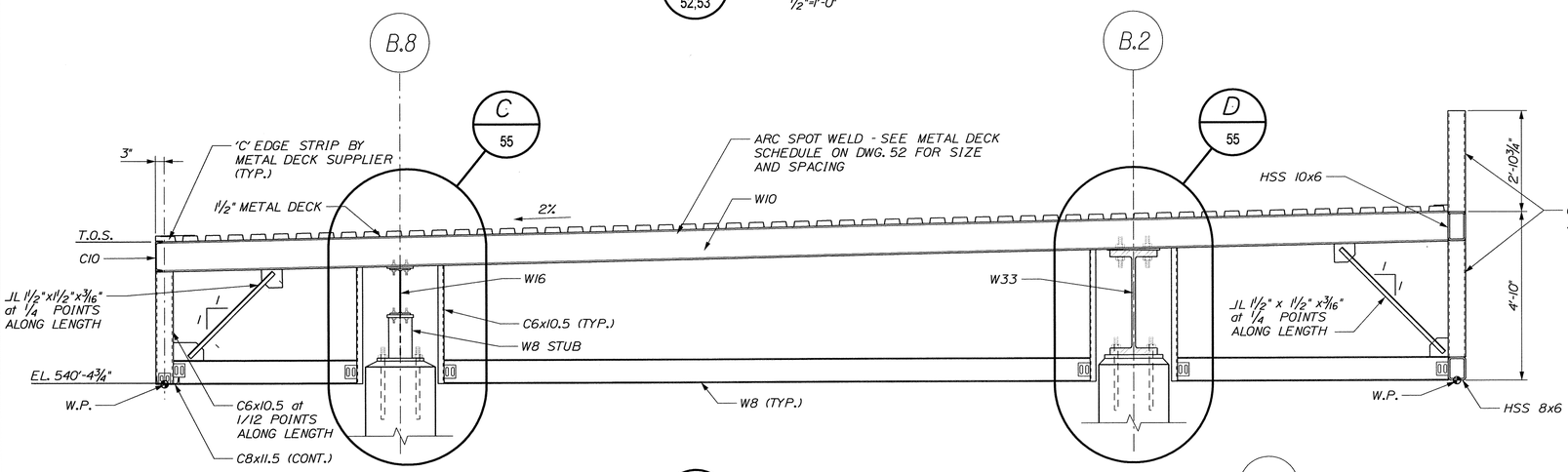

B 52, 53 SECTION
½"=1'-0"

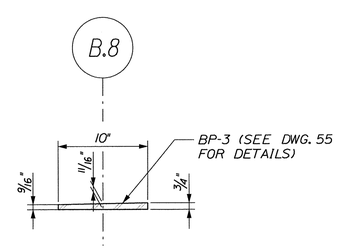

C DETAIL
1"=1'-0"

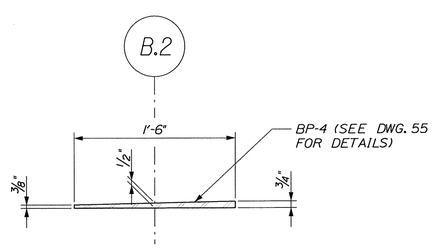

D DETAIL
1"=1'-0"

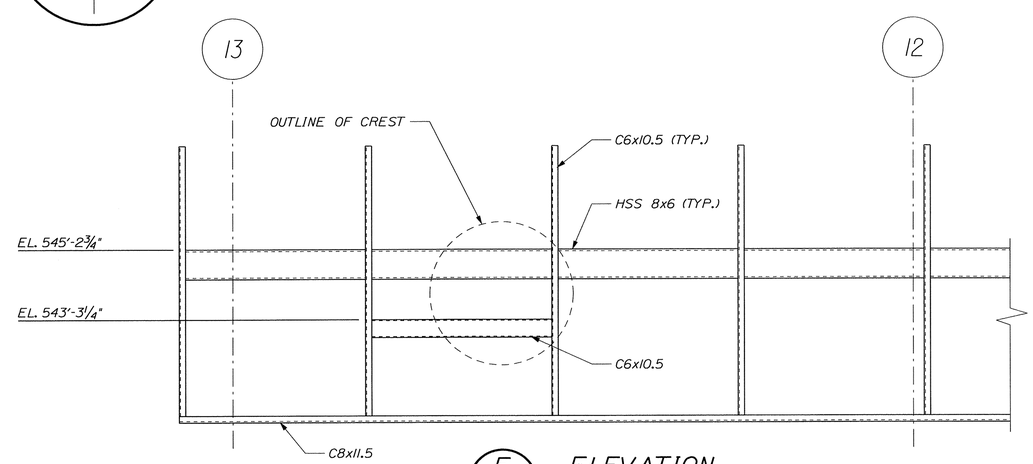

E 52, 53 ELEVATION
½"=1'-0"

STATE OF MAINE
DEPARTMENT OF TRANSPORTATION

BR-1004(210)X

PIN 10042.10

BRIDGE PLANS

BRIDGE NO. ____

STATE OF MAINE — BRIAN L. DORCAS No.9463 — PROFESSIONAL ENGINEER — 12-JUN-29

P.E. NUMBER
12-06-29
DATE

SIGNATURE

		BY	DATE
PROJ. MANAGER	B.L. DORCAS		
DESIGN-DETAILED	CMB	AEC	12-JUN-29
CHECKED-REVIEWED		RWS2	12-JUN-29
DESIGN2-DETAILED2			
DESIGN3-DETAILED3			
REVISIONS 1			
REVISIONS 2			
REVISIONS 3			
REVISIONS 4			
FIELD CHANGES			

INTERNATIONAL BRIDGE APPROACH
SAINT JOHN RIVER
FORT KENT AROOSTOOK

CANOPY STRUCTURAL DETAILS

SHEET NUMBER
54
OF 81

Filename: $file$ Division: $wkgroup$ Username: $user$ Date:$date$

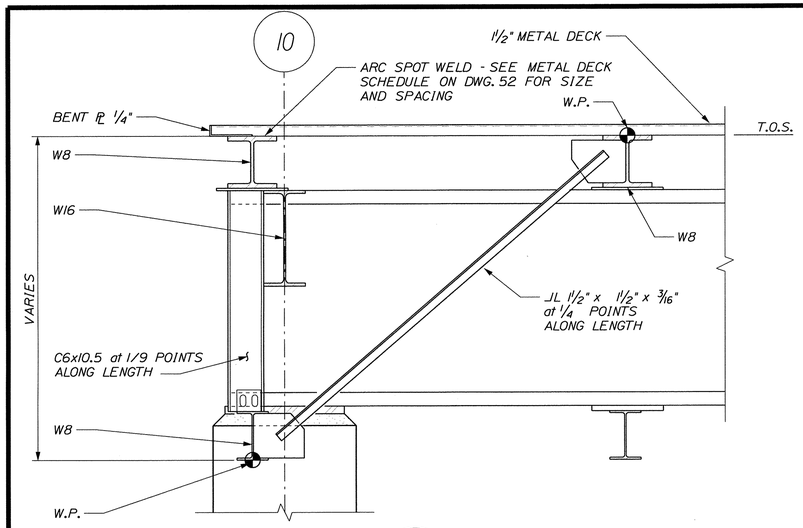

A 52, 53 SECTION 1"=1'-0"

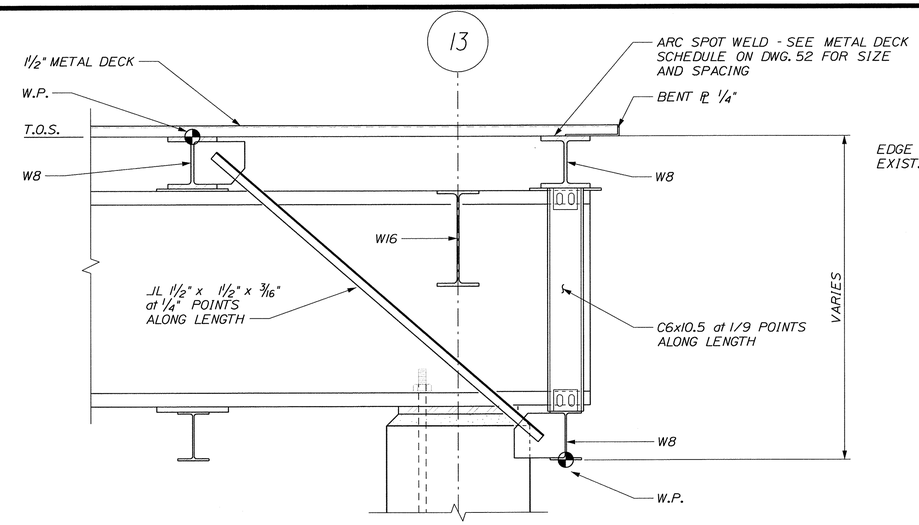

B 52, 53 SECTION 1"=1'-0"

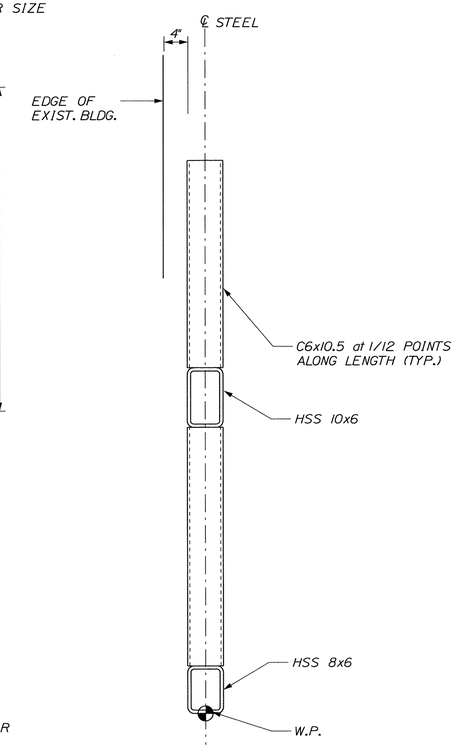

E 52, 53 SECTION 1"=1'-0"

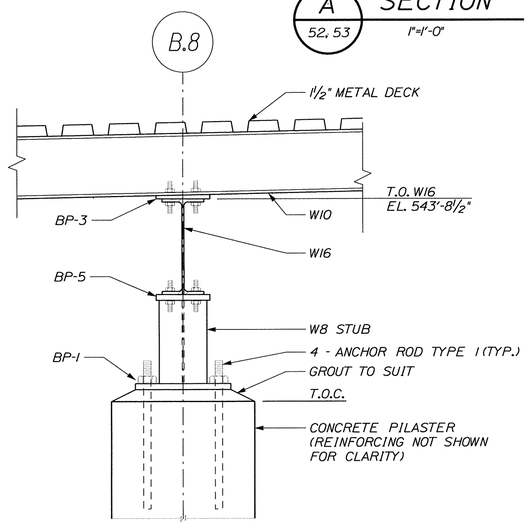

C 54 DETAIL 1"=1'-0"

NOTE:

SECONDARY FRAMING NOT SHOWN FOR CLARITY.

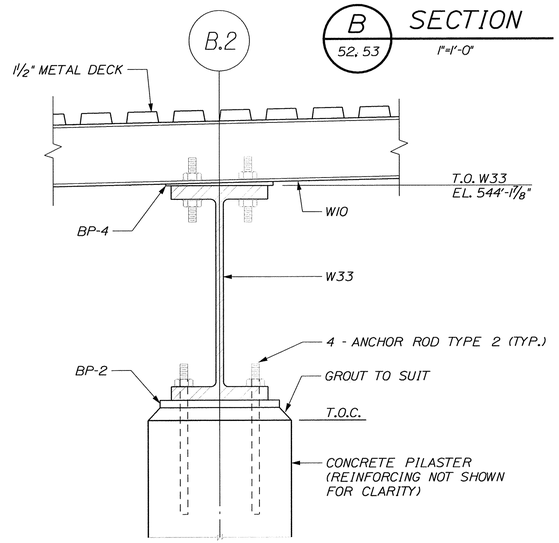

D 54 DETAIL 1"=1'-0"

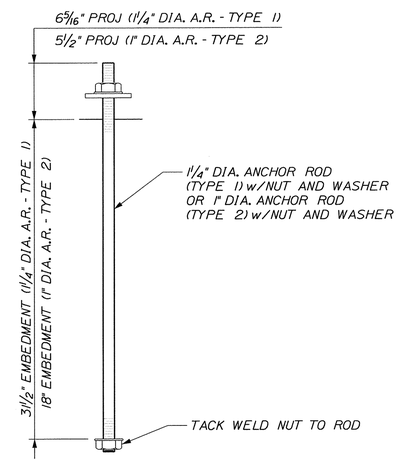

TYPICAL ANCHOR ROD DETAIL

3"=1'-0"

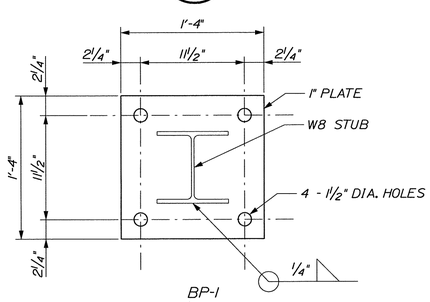

BP-1

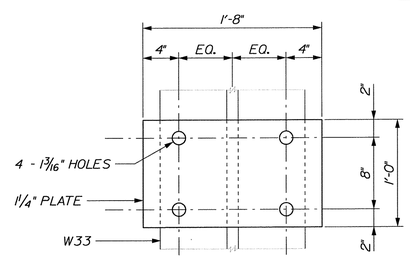

BP-2

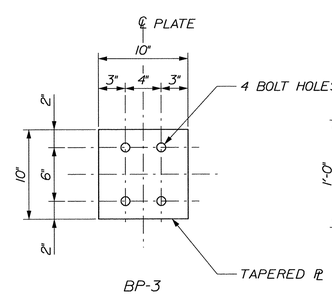

BP-3

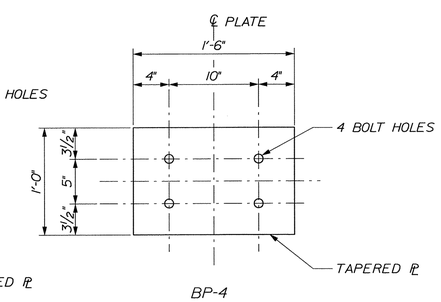

BP-4

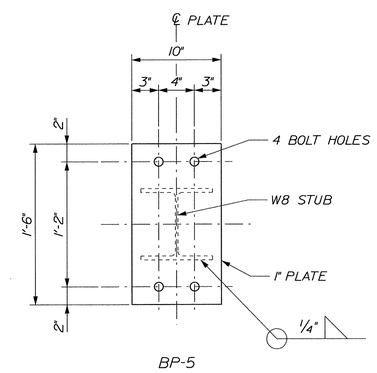

BP-5

BASE PLATE DETAILS

1½"=1'-0"

STATE OF MAINE
DEPARTMENT OF TRANSPORTATION

BR-1004(210)X

PIN 10042.10

BRIDGE PLANS

BRIDGE NO. ____

STATE OF MAINE BRIAN L. DORCAS No.9463 LICENSED PROFESSIONAL ENGINEER 12-08-20

PROJ. MANAGER	B.L. DORCAS		
DESIGN-DETAILED	CMB	AEC	12.JUN.29
CHECKED-REVIEWED		RWS2	12.JUN.29
DESIGN2-DETAILED2			
DESIGN3-DETAILED3			
REVISIONS 1			
REVISIONS 2			
REVISIONS 3			
REVISIONS 4			
FIELD CHANGES			

P.E. NUMBER — SIGNATURE — DATE

12-08-20

INTERNATIONAL BRIDGE APPROACH
SAINT JOHN RIVER
FORT KENT — AROOSTOOK

CANOPY STRUCTURAL FRAMING SECTIONS

SHEET NUMBER

55

OF 81

Filename: $file$ Division: $wkgroup$ Username: $user$ Date:$date$

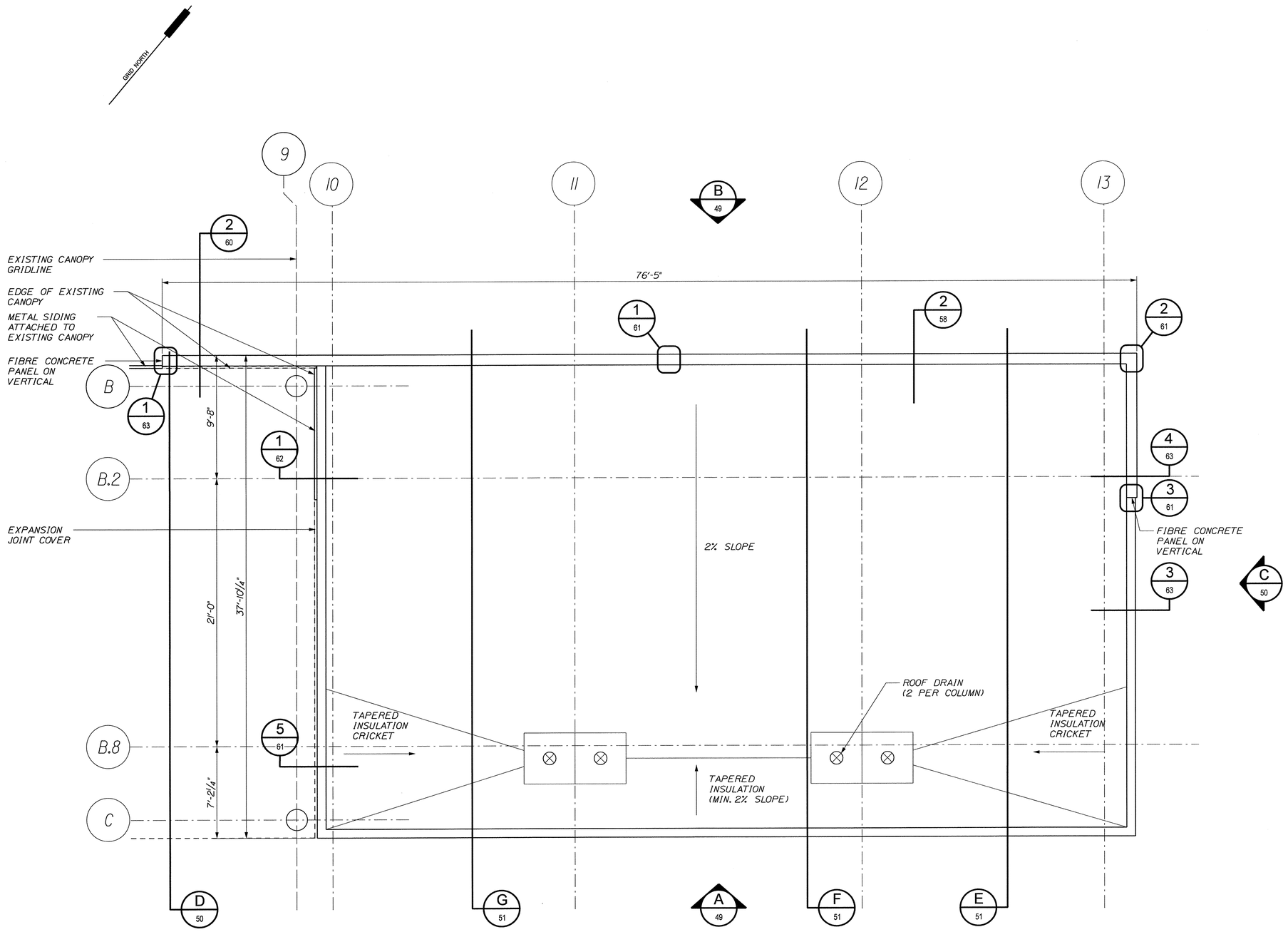

CANOPY: ROOF PLAN

SCALE: 1/4" = 1'-0"

STATE OF MAINE
DEPARTMENT OF TRANSPORTATION

BR-1004(210)X

PIN 10042.10

BRIDGE NO. ____

BRIDGE PLANS

STATE OF MAINE
BRIAN L. DORCAS
No.9453
PROFESSIONAL ENGINEER

P.E. NUMBER

17-06-29
DATE

SIGNATURE

		BY	DATE
PROJ. MANAGER	B.L. DORCAS		
DESIGN-DETAILED	SDS	AM	12 JUN 29
CHECKED-REVIEWED	SDS	RWS2	12 JUN 29
DESIGN2-DETAILED2			
DESIGN3-DETAILED3			
REVISIONS 1			
REVISIONS 2			
REVISIONS 3			
REVISIONS 4			
FIELD CHANGES			

INTERNATIONAL BRIDGE APPROACH
SAINT JOHN RIVER
FORT KENT AROOSTOOK

CANOPY ROOF PLAN

SHEET NUMBER

56

OF 81

Filename: $file$ Division: $wkgroup$ Username: $user$ Date:$date$

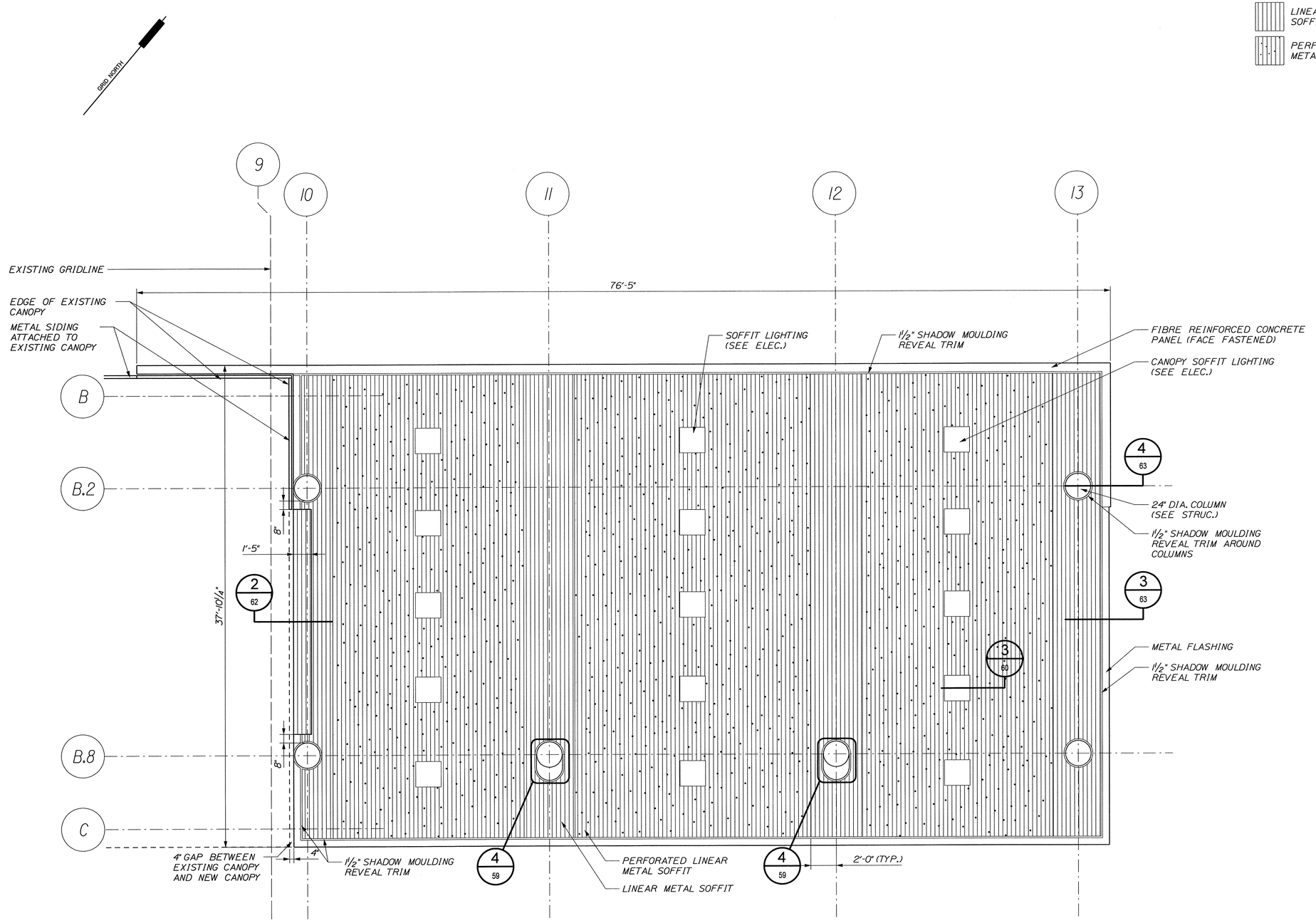

CANOPY: REFLECTED CEILING PLAN

SCALE: ¼" = 1'-0"

STATE OF MAINE
DEPARTMENT OF TRANSPORTATION

BR-1004(210)X

PIN 10042.10

BRIDGE PLANS

BRIDGE NO. ____

STATE OF MAINE · BRIAN L. DORCAS · No. 9453 · LICENSED PROFESSIONAL ENGINEER

P.E. NUMBER 12-06-20

SIGNATURE

DATE

PROJ. MANAGER	B.L. DORCAS	BY	DATE
DESIGN-DETAILED	SDS	AM	12.JUN.20
CHECKED-REVIEWED	SDS	RWS2	12.JUN.20
DESIGN2-DETAILED2			
DESIGN3-DETAILED3			
REVISIONS 1			
REVISIONS 2			
REVISIONS 3			
REVISIONS 4			
FIELD CHANGES			

INTERNATIONAL BRIDGE APPROACH
SAINT JOHN RIVER
FORT KENT AROOSTOOK

CANOPY
REFLECTED CEILING PLAN

SHEET NUMBER

57

OF 81

Filename: $file$ Division: $wkgroup$ Username: $user$ Date: $date$

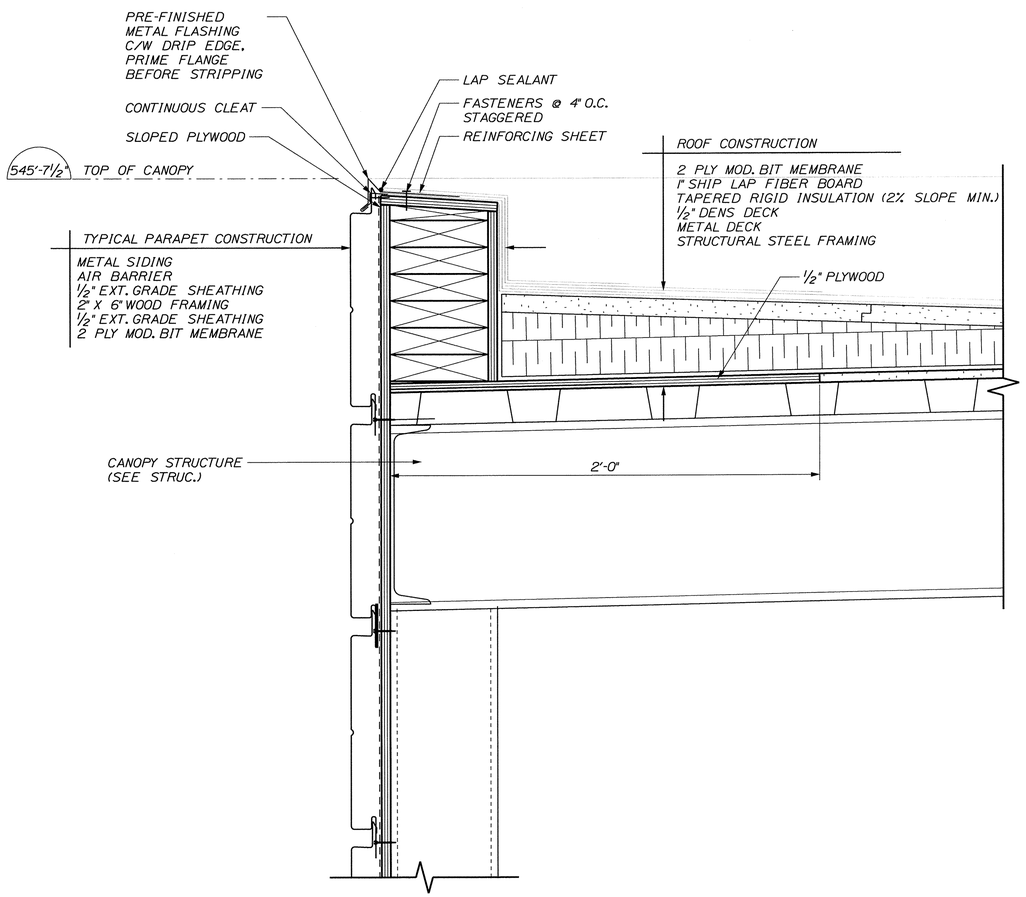

1 / 51 CANOPY DETAIL: TYPICAL PARAPET

SCALE: 3" = 1'-0"

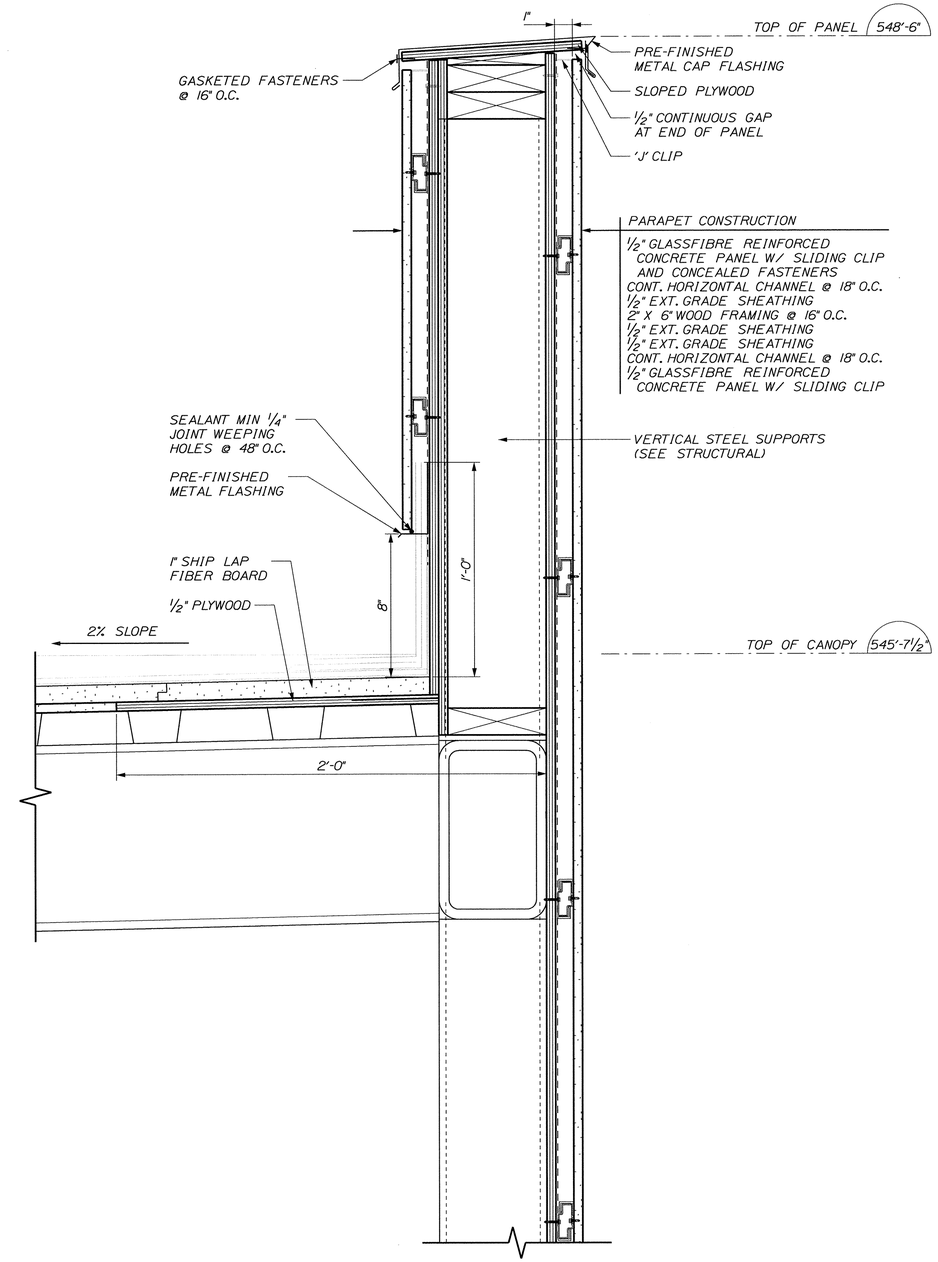

2 / 50, 51 CANOPY DETAIL: NORTH PARAPET

SCALE: 3" = 1'-0"

STATE OF MAINE
DEPARTMENT OF TRANSPORTATION

BR-1004(210)X

PIN 10042.10

BRIDGE NO. ____

BRIDGE PLANS

STATE OF MAINE BRIAN L. DORCAS No.9463 PROFESSIONAL ENGINEER

P.E. NUMBER

12-06-29

DATE

SIGNATURE

		BY	DATE
PROJ. MANAGER	B.L. DORCAS		
DESIGN-DETAILED	SDS	AM	12.JUN.29
CHECKED-REVIEWED	SDS	RWS2	12.JUN.29
DESIGN2-DETAILED2			
DESIGN3-DETAILED3			
REVISIONS 1			
REVISIONS 2			
REVISIONS 3			
REVISIONS 4			
FIELD CHANGES			

INTERNATIONAL BRIDGE APPROACH
SAINT JOHN RIVER
FORT KENT AROOSTOOK

CANOPY DETAILS

SHEET NUMBER

58

OF 81

Filename: $file$ Division: $wkgroup$ Username: $user$ Date:$date$

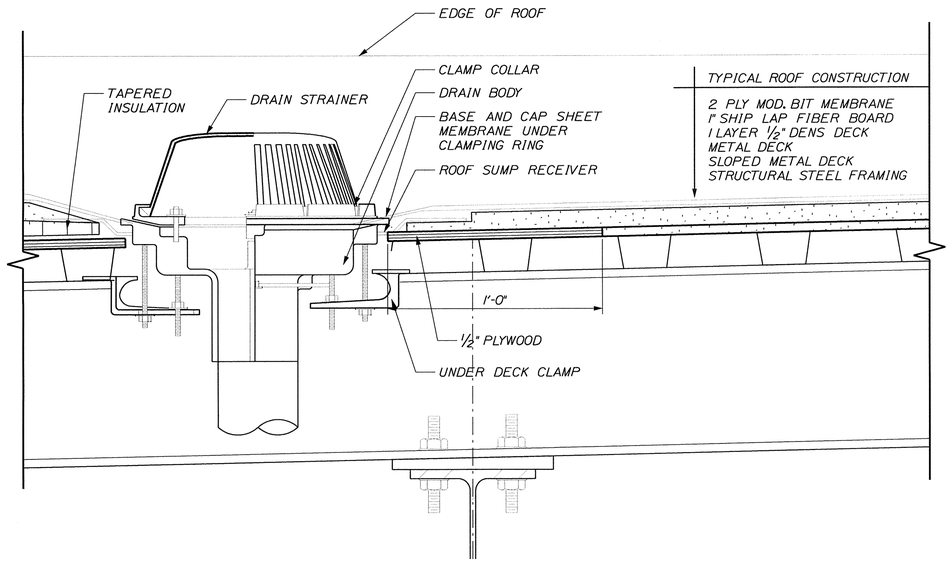

1 / 51 CANOPY DETAIL: TYPICAL ROOF DRAIN

SCALE: 3" = 1'-0"

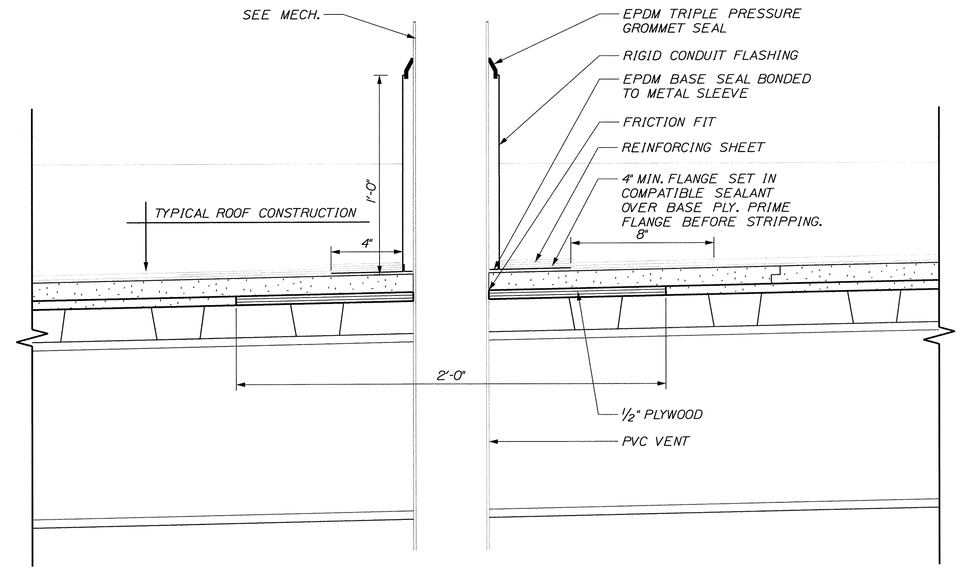

2 / 51 CANOPY DETAIL: TYPICAL PIPE SLEEVE DETAIL

SCALE: 3" = 1'-0"

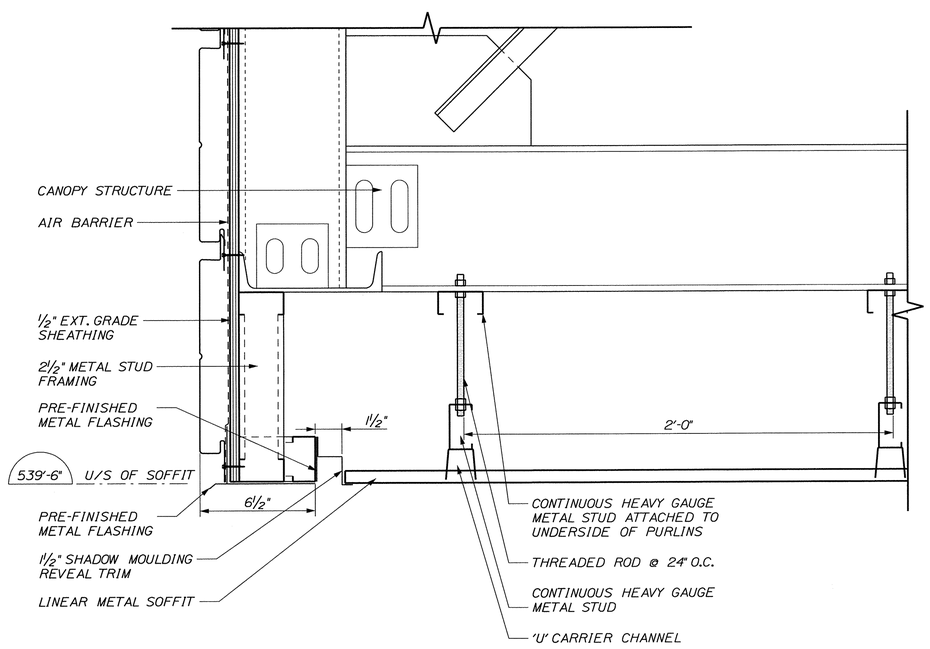

3 / 51 CANOPY DETAIL: TYPICAL SOFFIT

SCALE: 3" = 1'-0"

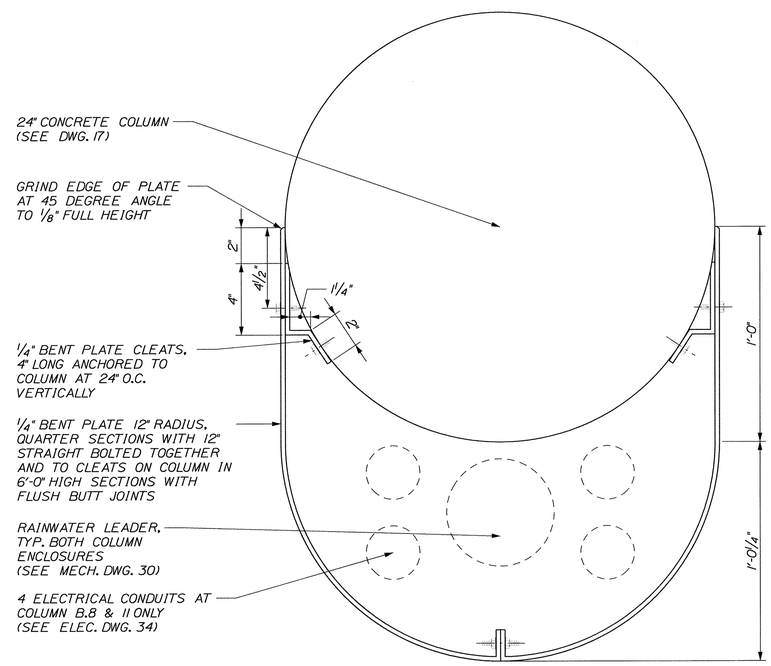

4 / 57 CANOPY DETAIL: COLUMN ENCLOSURE

SCALE: 3" = 1'-0"

STATE OF MAINE
DEPARTMENT OF TRANSPORTATION

BR-1004(210)X

PIN 10042.10

BRIDGE PLANS

BRIDGE NO. ____

STATE OF MAINE
BRIAN L. DORCAS
No.9463
LICENSED
PROFESSIONAL ENGINEER

P.E. NUMBER
12-06-29
DATE

PROJ. MANAGER	B.L. DORCAS	BY	DATE
DESIGN-DETAILED	SDS	AM	12.JUN.29
CHECKED-REVIEWED	SDS	RWS2	12.JUN.29
DESIGN2-DETAILED2			SIGNATURE
DESIGN3-DETAILED3			
REVISIONS 1			
REVISIONS 2			
REVISIONS 3			
REVISIONS 4			
FIELD CHANGES			

INTERNATIONAL BRIDGE APPROACH
SAINT JOHN RIVER
AROOSTOOK
FORT KENT

CANOPY DETAILS

SHEET NUMBER

59

OF 81

Filename: $file$ Division: $wkgroup$ Username: $user$ Date:$date$

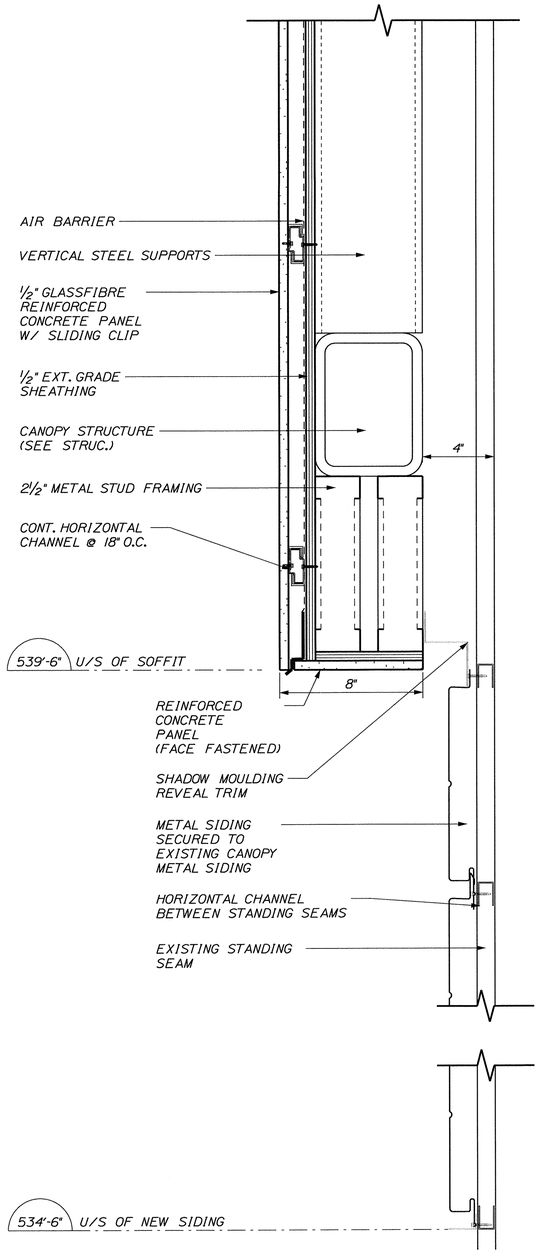

1/50 CANOPY DETAIL: NORTH WALL
SCALE: 3" = 1'-0"

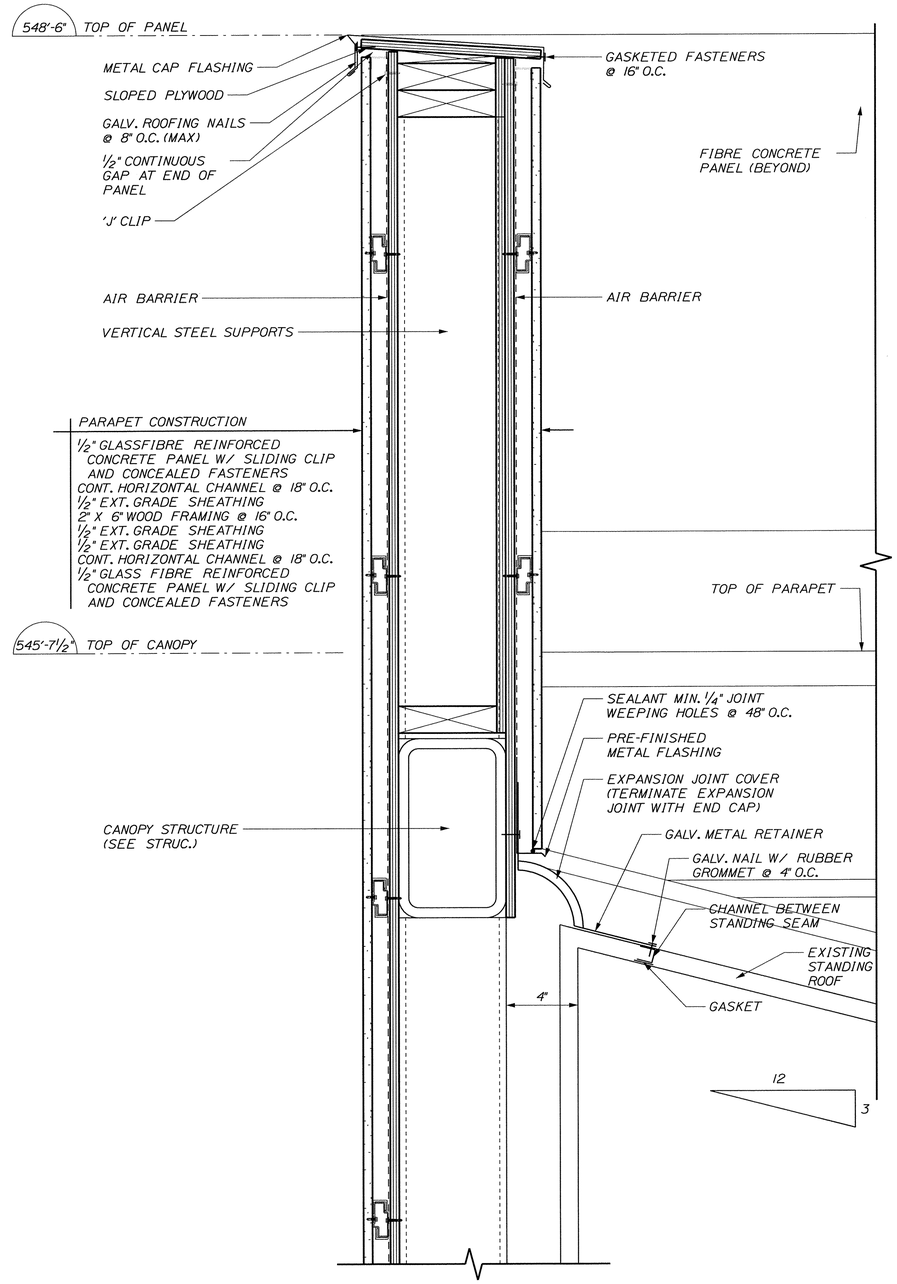

2/50 CANOPY DETAIL: NORTH WALL
SCALE: 3" = 1'-0"

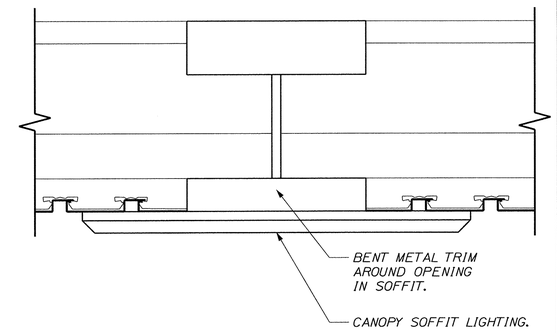

3/57 CANOPY SOFFIT LIGHTING: TRIM
SCALE: 3" = 1'-0"

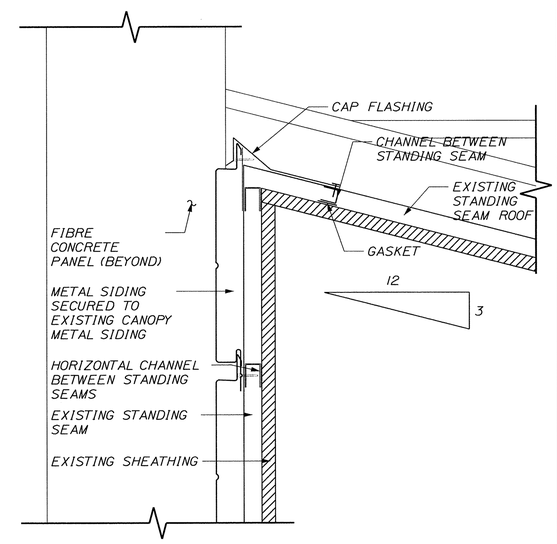

4/60 CANOPY DETAIL: NORTH WALL
SCALE: 3" = 1'-0"

STATE OF MAINE
DEPARTMENT OF TRANSPORTATION

BR-1004(210)X

PIN 10042.10

BRIDGE PLANS

BRIDGE NO. ____

STATE OF MAINE · BRIAN L. DORCAS No.9463 · PROFESSIONAL ENGINEER

P.E. NUMBER

12-06-29
DATE

SIGNATURE

		BY	DATE
PROJ. MANAGER	B.L. DORCAS		
DESIGN-DETAILED	SDS	AM	12 JUN 29
CHECKED-REVIEWED	SDS	RWS2	12 JUN 29
DESIGN2-DETAILED2			
DESIGN3-DETAILED3			
REVISIONS 1			
REVISIONS 2			
REVISIONS 3			
REVISIONS 4			
FIELD CHANGES			

INTERNATIONAL BRIDGE APPROACH
SAINT JOHN RIVER
FORT KENT
AROOSTOOK

CANOPY DETAILS

SHEET NUMBER
60
OF 81

Filename: $file$ Division: $wkgroup$ Username: $user$ Date:$date$

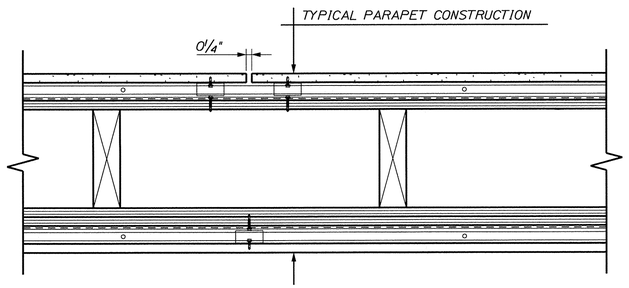

1 / 56 CONCRETE PANEL DETAIL: VERTICAL JOINT
SCALE: 3" = 1'-0"

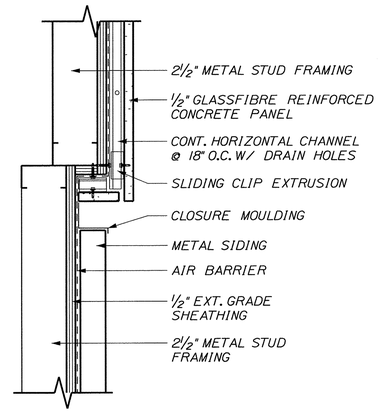

3 / 56 PLAN DETAIL: TRANSITION
SCALE: 3" = 1'-0"

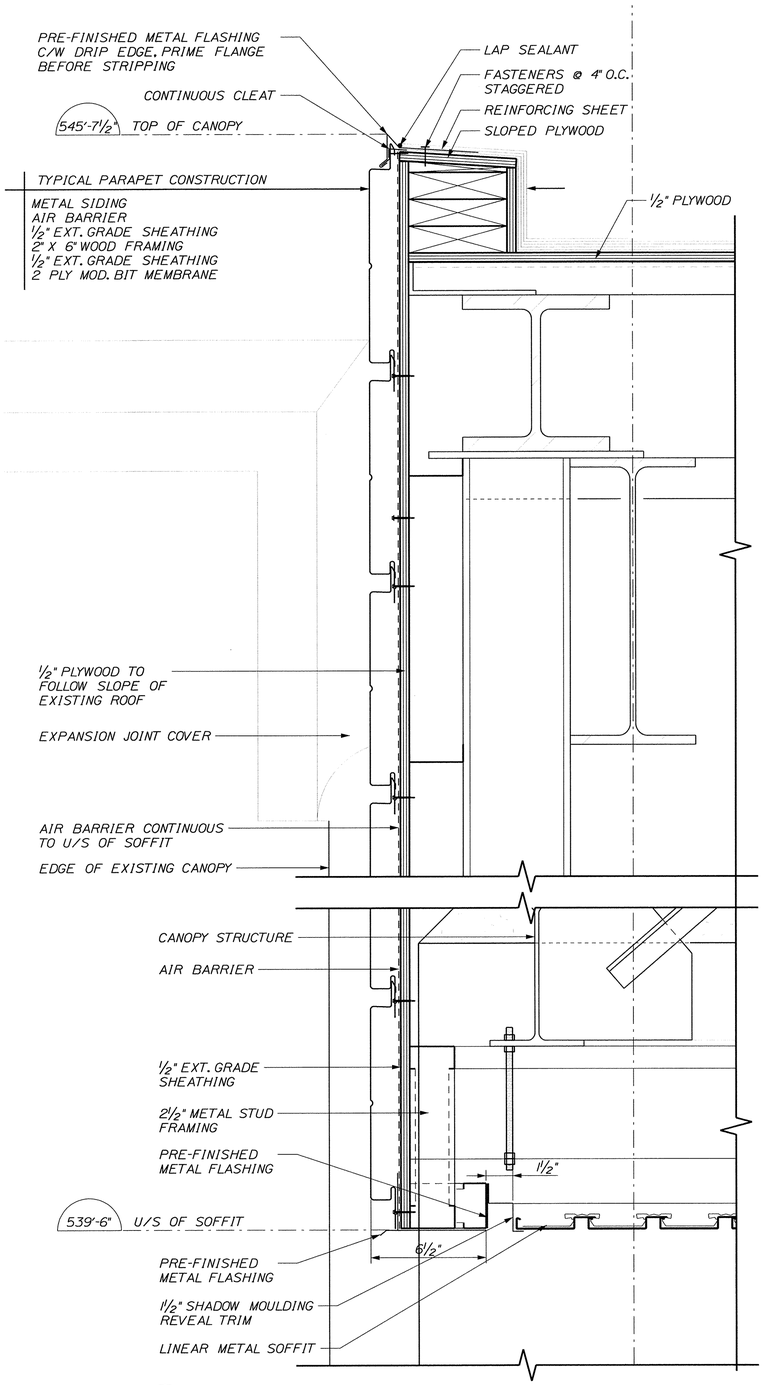

5 / 56 CANOPY DETAIL: EXISTING / NEW TRANSITION
SCALE: 3" = 1'-0"

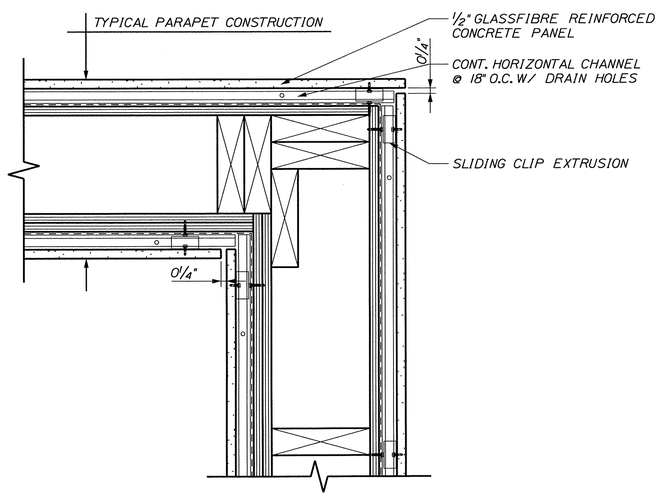

2 / 56 CONCRETE PANEL DETAIL: CORNER JOINT
SCALE: 3" = 1'-0"

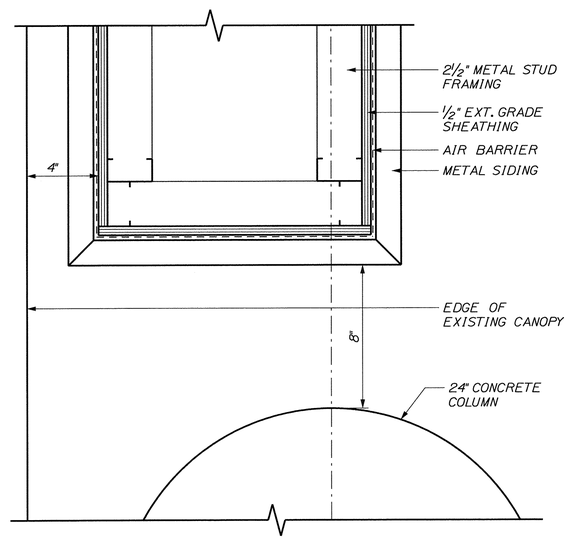

4 / 50 PLAN DETAIL: TRANSITION
SCALE: 3" = 1'-0"

STATE OF MAINE
DEPARTMENT OF TRANSPORTATION

BR-1004(210)X

PIN 10042.10

BRIDGE PLANS

BRIDGE NO. ____

STATE OF MAINE
BRIAN L. DORCAS
No.5463
LICENSED PROFESSIONAL ENGINEER

P.E. NUMBER
12-06-29
DATE
SIGNATURE

		BY	DATE
PROJ. MANAGER	B.L. DORCAS		
DESIGN-DETAILED	SDS	AM	12.JUN.29
CHECKED-REVIEWED	SDS	RWS2	12.JUN.29
DESIGN2-DETAILED2	SDS		
DESIGN3-DETAILED3			
REVISIONS 1			
REVISIONS 2			
REVISIONS 3			
REVISIONS 4			
FIELD CHANGES			

INTERNATIONAL BRIDGE APPROACH
SAINT JOHN RIVER
AROOSTOOK
FORT KENT

CANOPY DETAILS

SHEET NUMBER
61
OF 81

Filename: $file$ Division: $wkgroup$ Username: $user$ Date:$date$

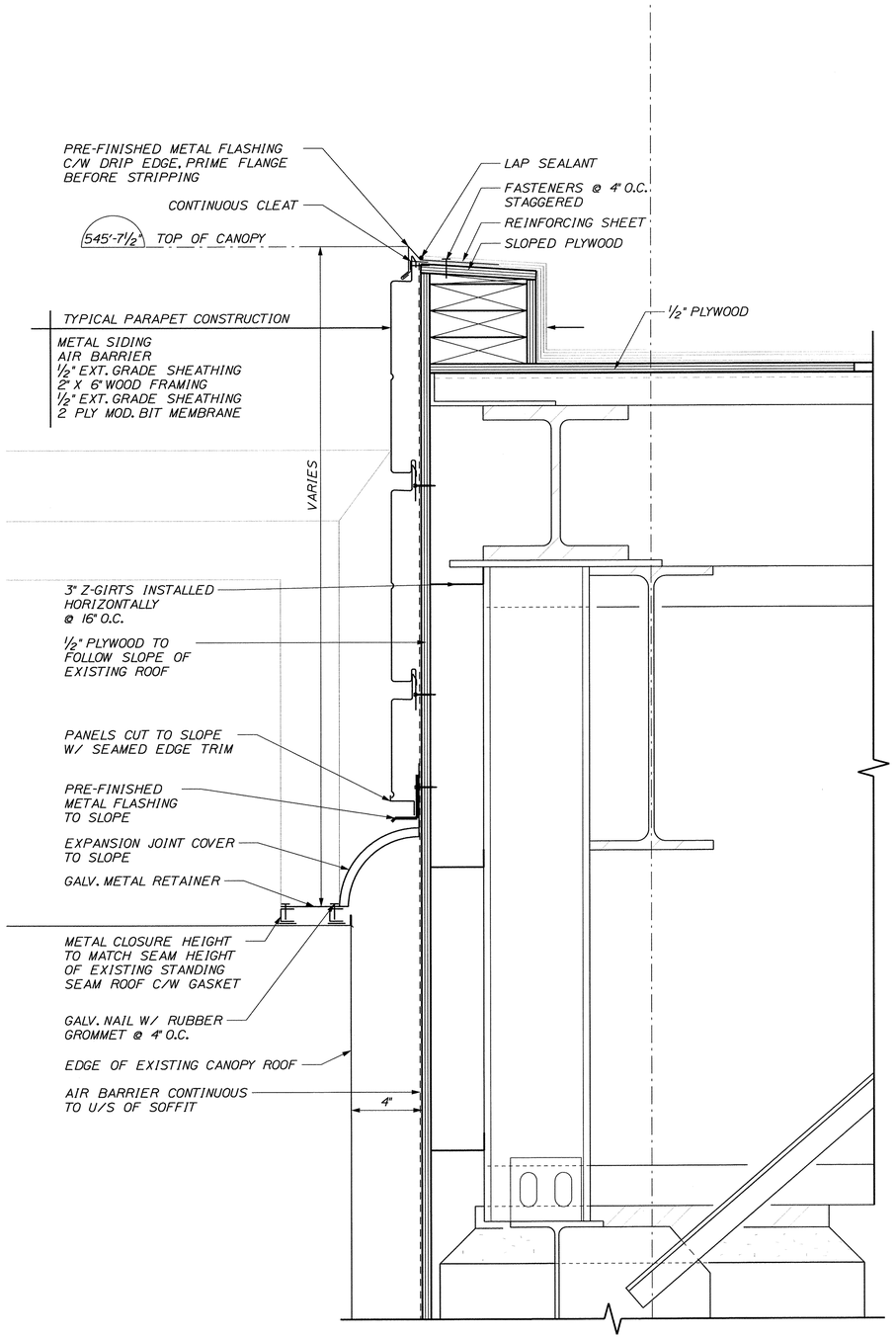

1 / 56 CANOPY DETAIL: EXISTING / NEW TRANSITION

SCALE: 3" = 1'-0"

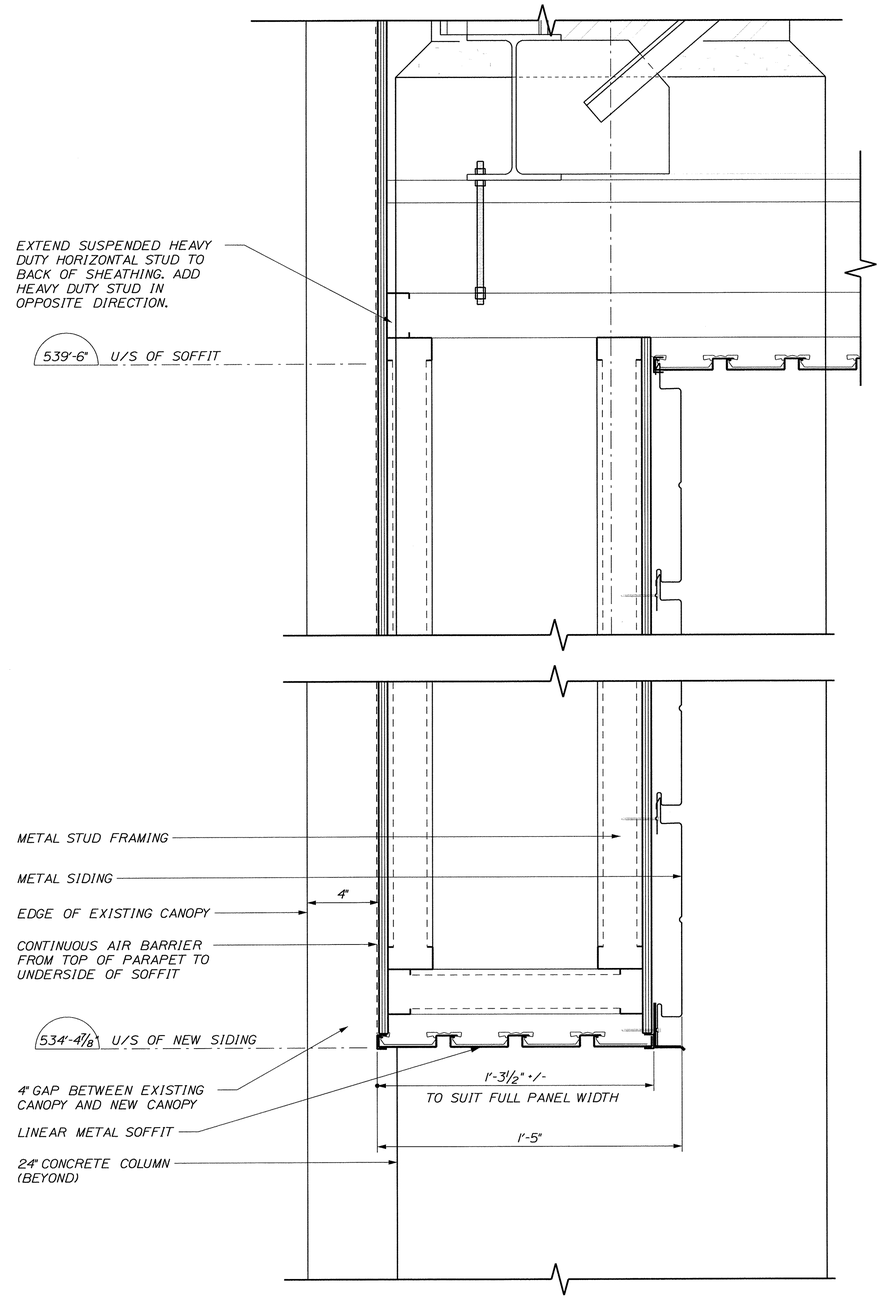

2 / 57 CANOPY DETAIL: EXISTING / NEW TRANSITION

SCALE: 3" = 1'-0"

STATE OF MAINE
DEPARTMENT OF TRANSPORTATION

BR-1004(210)X

PIN 10042.10

BRIDGE NO. ____

BRIDGE PLANS

STATE OF MAINE BRIAN L. DORCAS No.9463 REGISTERED PROFESSIONAL ENGINEER

P.E. NUMBER 12-06-29
SIGNATURE DATE

PROJ. MANAGER	B.L. DORCAS	BY	DATE
DESIGN-DETAILED	SDS	AM	12.JUN.29
CHECKED-REVIEWED	SDS	RWS2	12.JUN.29
DESIGN2-DETAILED2			
DESIGN3-DETAILED3			
REVISIONS 1			
REVISIONS 2			
REVISIONS 3			
REVISIONS 4			
FIELD CHANGES			

INTERNATIONAL BRIDGE APPROACH
SAINT JOHN RIVER
FORT KENT AROOSTOOK

CANOPY DETAILS

SHEET NUMBER
62
OF 81

Filename: $file$ Division: $wkgroup$ Username: $user$ Date:$date$

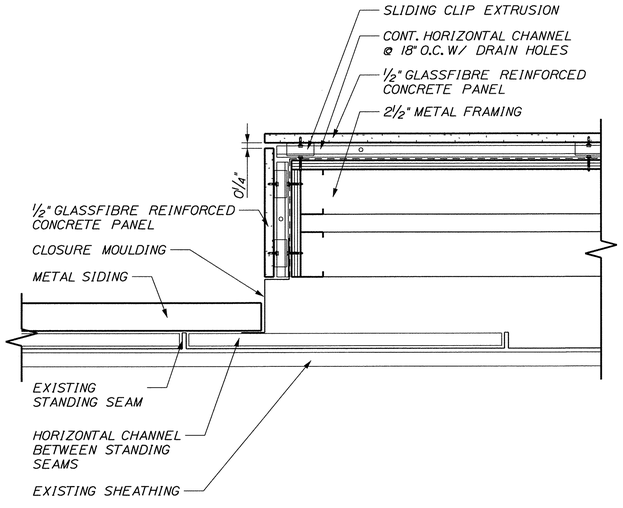

1 / 56 CANOPY DETAIL
SCALE: 3" = 1'-0"

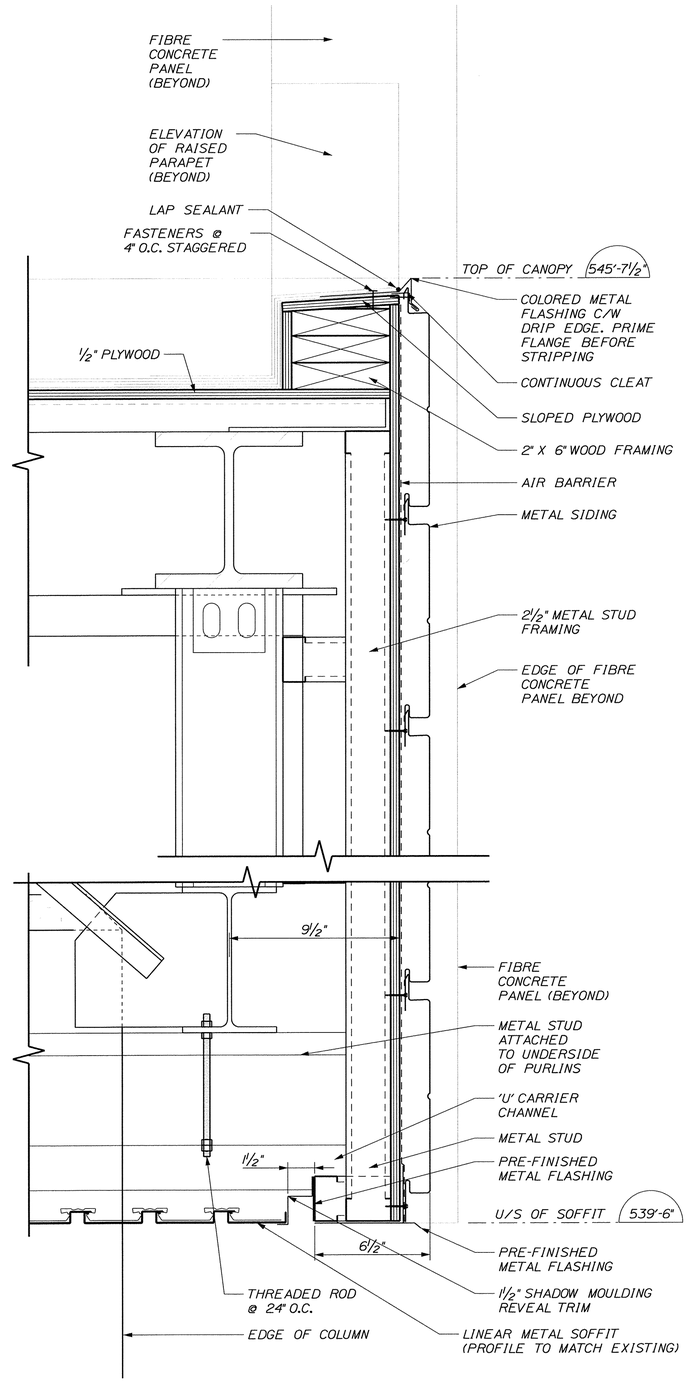

3 / 56 CANOPY DETAIL
SCALE: 3" = 1'-0"

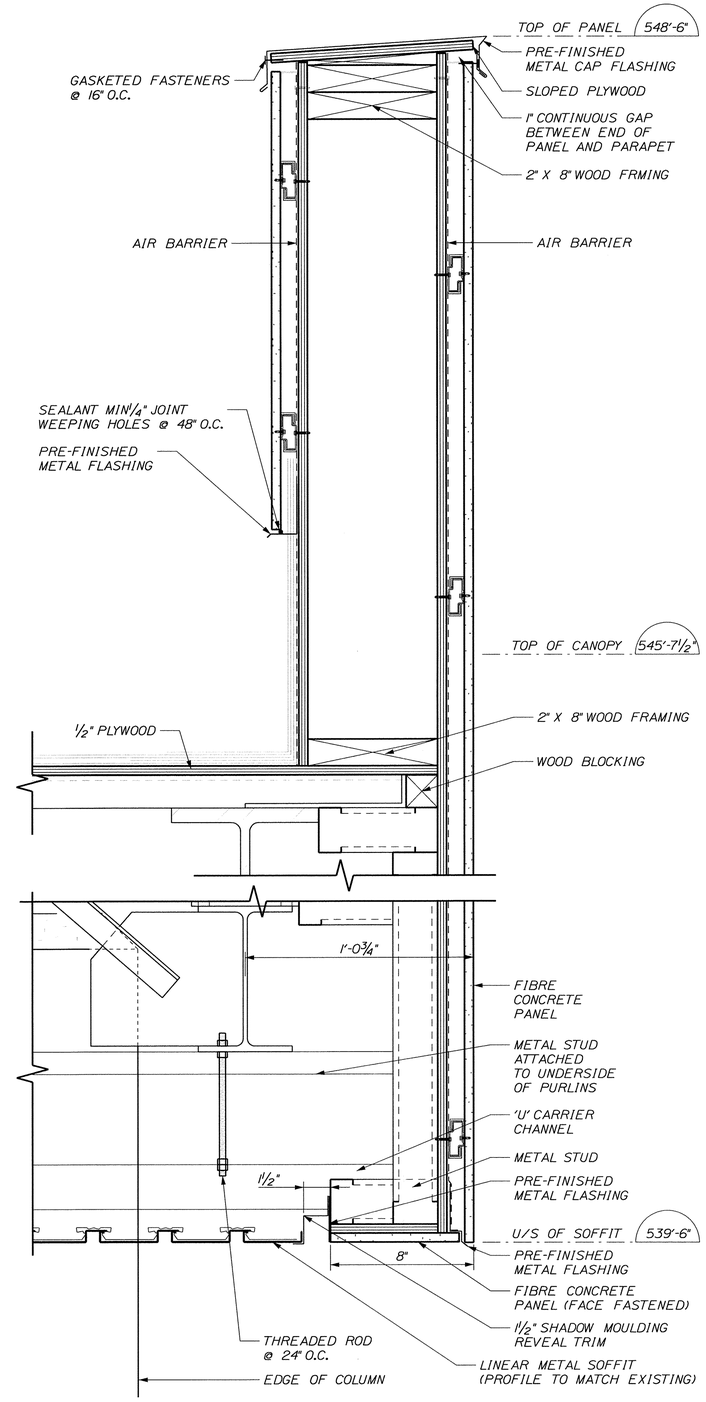

4 / 56 CANOPY DETAIL
SCALE: 3" = 1'-0"

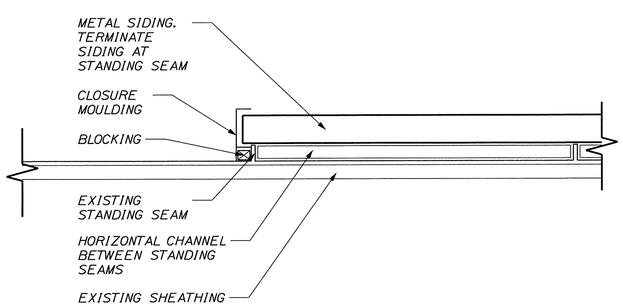

2 / 56 CANOPY DETAIL
SCALE: 3" = 1'-0"

STATE OF MAINE
DEPARTMENT OF TRANSPORTATION

BR-1004(210)X

PIN 10042.10

BRIDGE PLANS

BRIDGE NO. ____

STATE OF MAINE — BRIAN L. DORCAS — No. 9463 — LICENSED — PROFESSIONAL ENGINEER

P.E. NUMBER
12-06-20
DATE

SIGNATURE

		BY	DATE
PROJ. MANAGER	B.L. DORCAS		
DESIGN-DETAILED	SDS	JM	12.JUN.22
CHECKED-DETAILED	SDS	RWS2	12.JUN.22
DESIGN-DETAILED3	SDS		
REVISIONS 1			
REVISIONS 2			
REVISIONS 3			
REVISIONS 4			
FIELD CHANGES			

INTERNATIONAL BRIDGE APPROACH
SAINT JOHN RIVER
FORT KENT AROOSTOOK

CANOPY DETAILS

SHEET NUMBER
63
OF 81

Filename: $file$ Division: $wkgroup$ Username: $user$ Date:$date$

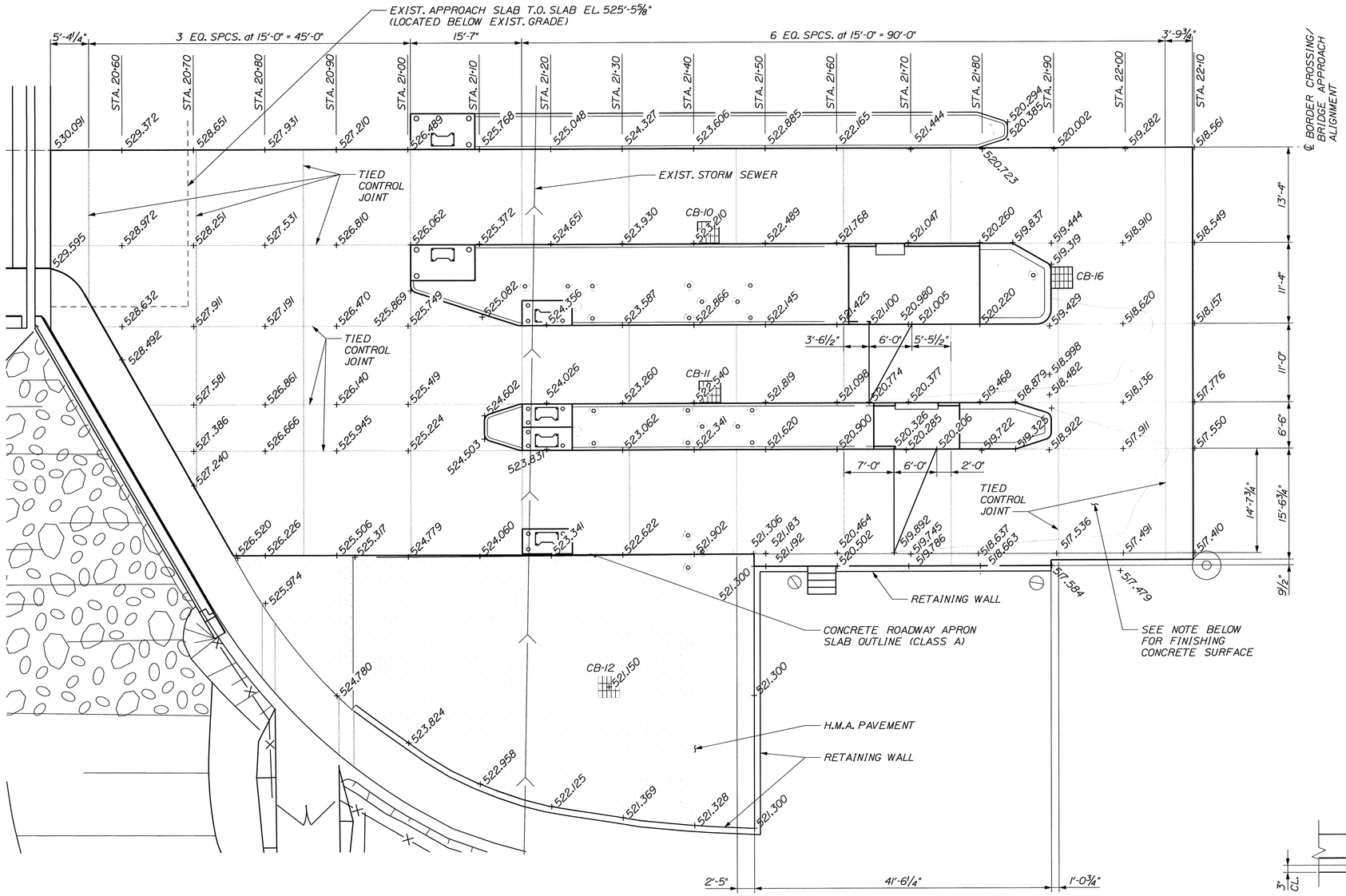

CONCRETE ROADWAY APRON PLAN
SCALE: ⅛" = 1'-0"

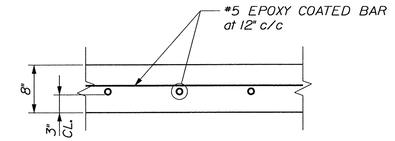

TYPICAL CONCRETE SECTION
SCALE: ⅛" = 1'-0"

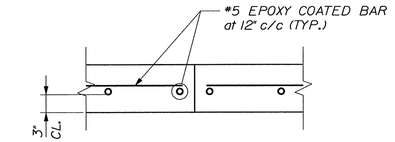

TYPICAL CONTROL JOINT
SCALE: ⅛" = 1'-0"

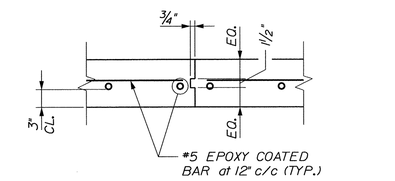

TYPICAL CONSTRUCTION JOINT
SCALE: ⅛" = 1'-0"

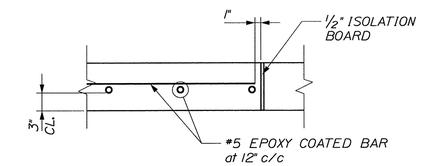

TYPICAL ISOLATION JOINT
SCALE: ⅛" = 1'-0"

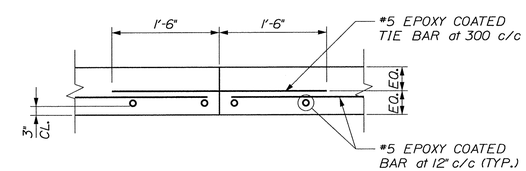

TYPICAL TIED CONTROL JOINT
SCALE: ⅛" = 1'-0"

TRANSVERSE SAW CUT GROOVING OF CONCRETE ROADWAY APRON SLAB

APPLY TRANSVERSE SAW CUT FINISH TO CONCRETE ROADWAY APRON SLAB AFTER THE SPECIFIED CURING PERION HAS ELAPSED. TERMINATE GROOVES WITHIN 6" TO 12" OF THE VERTICAL FACE OF CURB OR PARAPET. TRANSVERSE GROOVES SHALL BE CUT PERPENDICULAR TO THE CENTRELINE OF THE ROADWAY. CUT ALL GROOVES IN A RECTANGULAR SHAPE CONFORMING TO THE FOLLOWING DIMENSIONS:

SPACING: CENTRE-TO-CENTRE 1" TO 1¼"
WIDTH: 3/16" +/- 1/16"
DEPTH: ¼" +/- 1/16"

NOTE:

SEE DWG. 17 FOR GENERAL NOTES

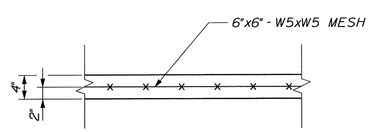

TYPICAL SECTION THROUGH CONCRETE ISLAND
SCALE: ⅛" = 1'-0"

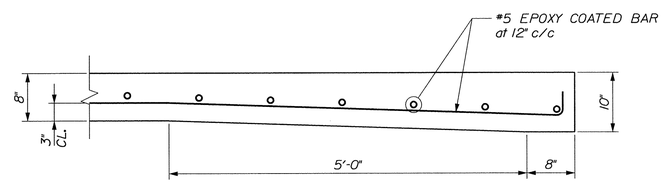

TYPICAL THICKENED EDGE
SCALE: ⅛" = 1'-0"

STATE OF MAINE
DEPARTMENT OF TRANSPORTATION

BR-1004(210)X

PIN 10042.10

BRIDGE PLANS

BRIDGE NO. ____

STATE OF MAINE BRIAN L. DORCAS No.9403 LICENSED PROFESSIONAL ENGINEER

P.E. NUMBER

12-06-29
DATE

SIGNATURE

PROJ. MANAGER	B.L. DORCAS		
DESIGN-DETAILED	MJH	AEC	12.JUN.29
CHECKED-REVIEWED		RWS2	12.JUN.29
DESIGN2-DETAILED2			
DESIGN3-DETAILED3			
REVISIONS 1			
REVISIONS 2			
REVISIONS 3			
REVISIONS 4			
FIELD CHANGES			

INTERNATIONAL BRIDGE APPROACH
SAINT JOHN RIVER
FORT KENT AROOSTOOK

CONCRETE ROADWAY APRON
FINISH GRADE PLAN and SECTIONS

SHEET NUMBER
64
OF 81

Filename: $file$ Division: $wkgroup$ Username: $user$ Date:$date$

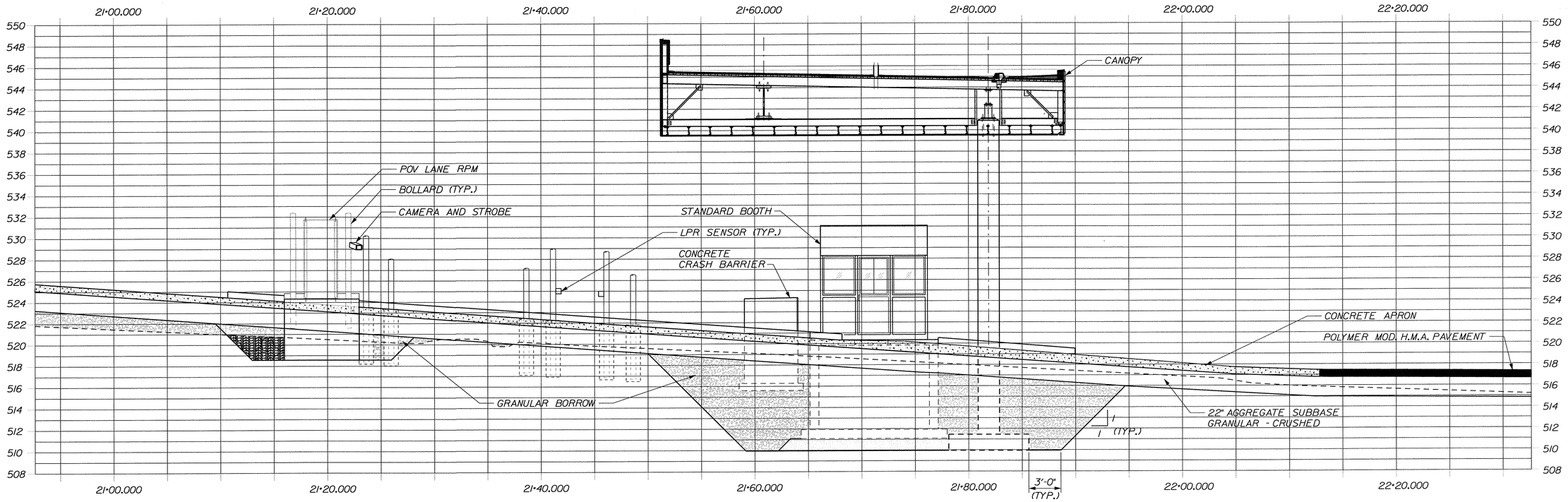

EAST ELEVATION STANDARD BOOTH ISLAND

SCALE: 1" = 5'-0"

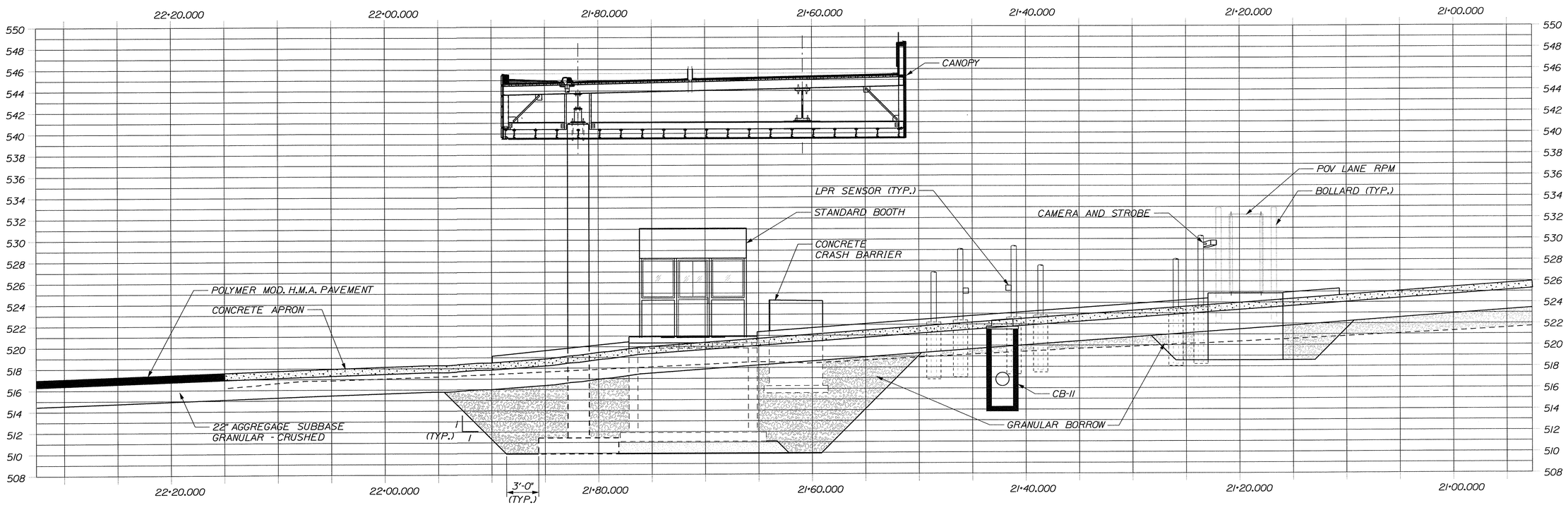

WEST ELEVATION STANDARD BOOTH ISLAND

SCALE: 1" = 5'-0"

STATE OF MAINE
DEPARTMENT OF TRANSPORTATION

BR-1004(210)X

PIN 10042.10

BRIDGE NO. ____

BRIDGE PLANS

STATE OF MAINE
BRIAN L. DORCAS
No.9463
LICENSED
PROFESSIONAL ENGINEER

P.E. NUMBER
13-07-12
DATE

SIGNATURE

	BY	DATE
PROJ. MANAGER	B.L. DORCAS	
DESIGN-DETAILED	AEG	12.JUN.29
CHECKED-REVIEWED	RWS2	12.JUN.29
DESIGN2-DETAILED2		
DESIGN3-DETAILED3		
REVISIONS 1		
REVISIONS 2		
REVISIONS 3		
REVISIONS 4		
FIELD CHANGES		

INTERNATIONAL BRIDGE APPROACH
SAINT JOHN RIVER
FORT KENT AROOSTOOK

CONCRETE APRON
CROSS SECTIONS

SHEET NUMBER

65

OF 81

Filename: $file$ Division: $wkgroup$ Username: $user$ Date:$date$

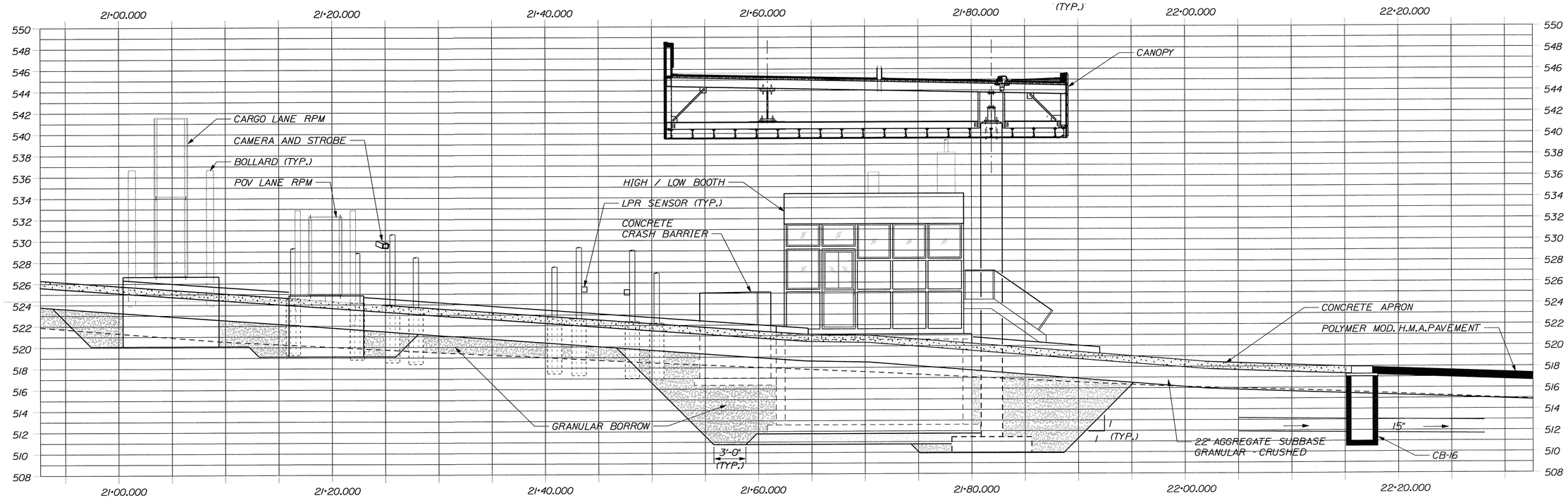

EAST ELEVATION HIGH / LOW BOOTH ISLAND

SCASE: 1" = 5'-0"

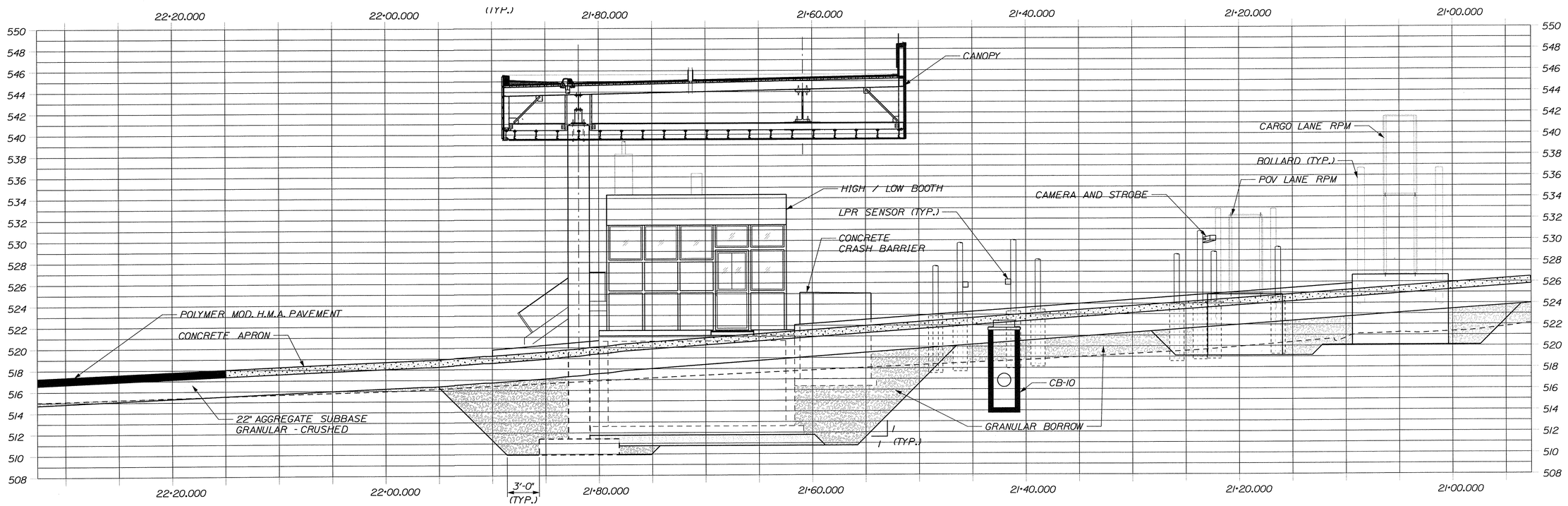

WEST ELEVATION HIGH / LOW BOOTH ISLAND

SCASE: 1" = 5'-0"

STATE OF MAINE
DEPARTMENT OF TRANSPORTATION

BR-1004(210)X

PIN 10042.10

BRIDGE PLANS

BRIDGE NO. ____

STATE OF MAINE BRIAN L. DORCAS No.5463 PROFESSIONAL ENGINEER

SIGNATURE	P.E. NUMBER 13-07-12	DATE

PROJ. MANAGER	B.L. DORCAS	
DESIGN-DETAILED	AFC	12.JUN.29
CHECKED-REVIEWED	RWS2	12.JUN.29
DESIGN2-DETAILED2		
DESIGN3-DETAILED3		
REVISIONS 1		
REVISIONS 2		
REVISIONS 3		
REVISIONS 4		
FIELD CHANGES		

INTERNATIONAL BRIDGE APPROACH
SAINT JOHN RIVER
FORT KENT AROOSTOOK

CONCRETE APRON CROSS SECTIONS

SHEET NUMBER

66

OF 81

Filename: $file$ Division: $wkgroup$ Username: $user$ Date:$date$

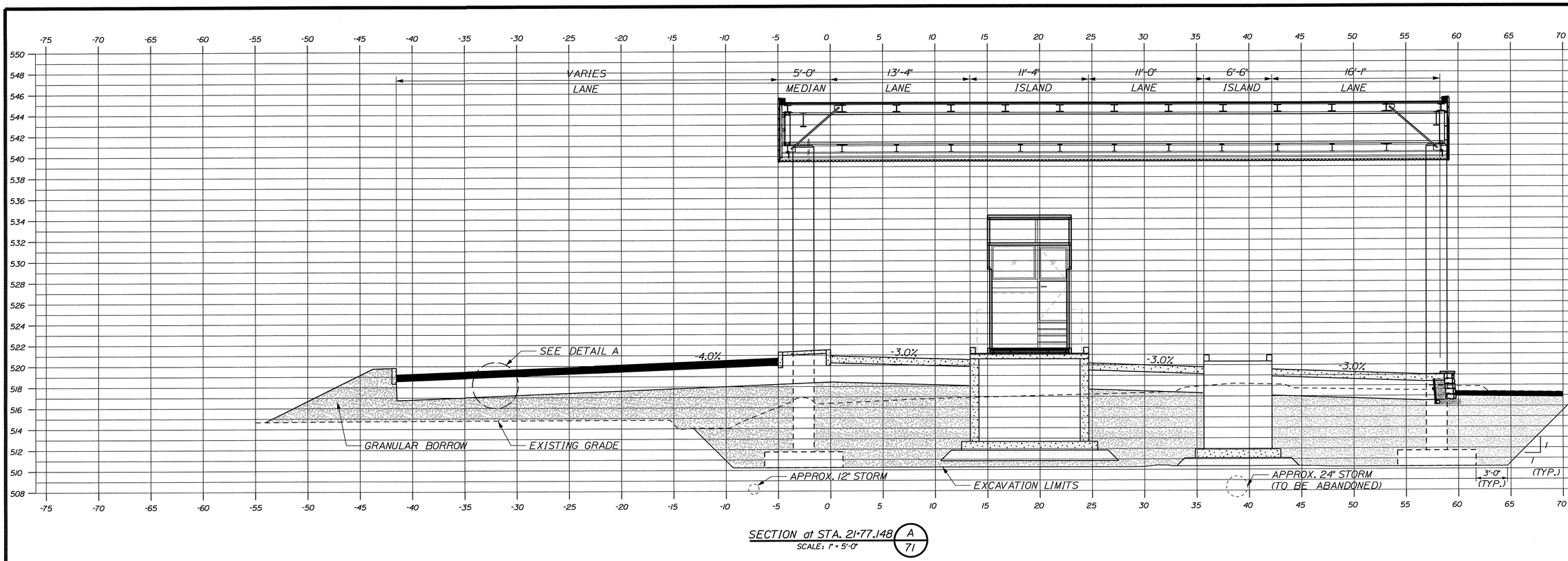

SECTION at STA. 21+77.148 (A / 71)
SCALE: 1" = 5'-0"

NOTE:

1. THE PAVEMENT, SUBBASE DEPTH AS SHOWN ON PLANS ARE INTENTED TO BE NOMINAL.
2. CROWNS FOR ALL SECTIONS AND COURSES OF SUBBASE AND PAVEMENT SHALL BE STRAIGHT.
3. THE STATIONING SHOWN UNDER EACH TYPICAL SECTION IS APPROXIMATE.

DETAIL A
N.T.S

2" POLYMER MOD. H.M.A. 12.5mm
2 X 3" H.M.A 19.0mm
22" AGGREGATE SUBBASE GRANULAR - CRUSHED

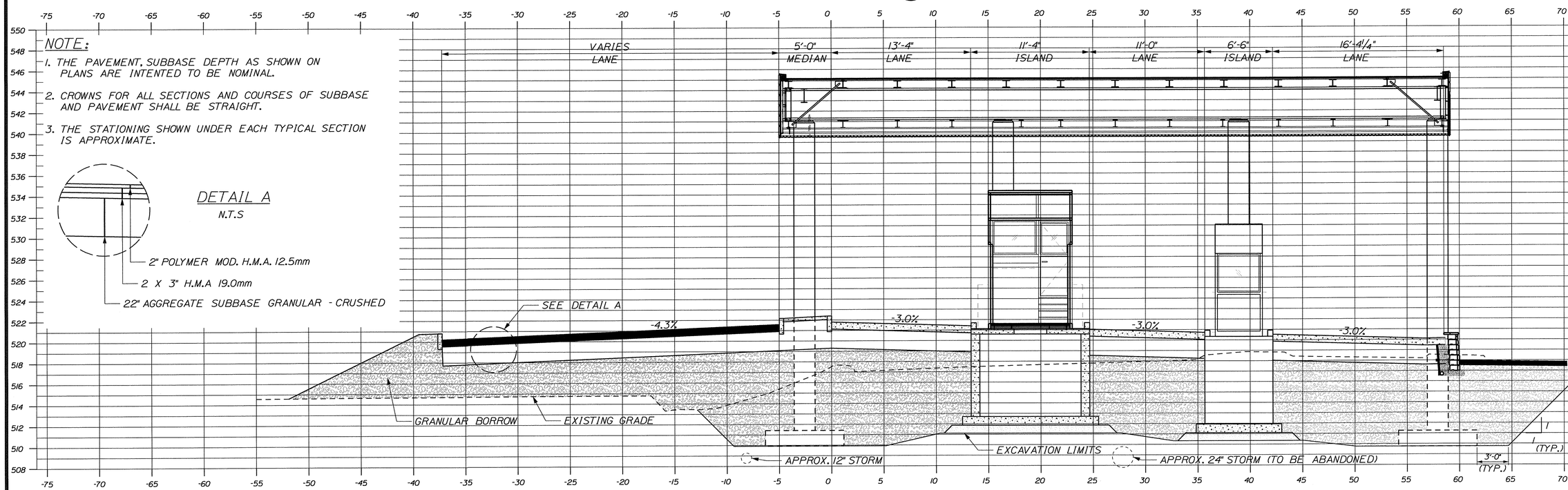

SECTION at STA. 21+65.147 (B / 71)
SCALE: 1" = 5'-0"

STATE OF MAINE
DEPARTMENT OF TRANSPORTATION

BR-1004(210)X

PIN
10042.10

BRIDGE PLANS

BRIDGE NO. ____

STATE OF MAINE
BRIAN I. DORCAS
No.9463
PROFESSIONAL ENGINEER
BRIDGE SIGNATURE

P.E. NUMBER
13-07-19
DATE
SIGNATURE

PROJ. MANAGER	B.I. DORCAS		BY	DATE
DESIGN-DETAILED			AEG	12-JUN-29
CHECKED-REVIEWED			RWS2	12-JUN-29
DESIGN2-DETAILED2				
DESIGN3-DETAILED3				
REVISIONS 1				
REVISIONS 2				
REVISIONS 3				
REVISIONS 4				
FIELD CHANGES				

INTERNATIONAL BRIDGE APPROACH
SAINT JOHN RIVER
FORT KENT AROOSTOOK

BRIDGE APPROACH
CROSS SECTIONS

SHEET NUMBER
67
OF 81

Filename: $file$ Division: $wkgroup$ Username: $user$ Date:$date$

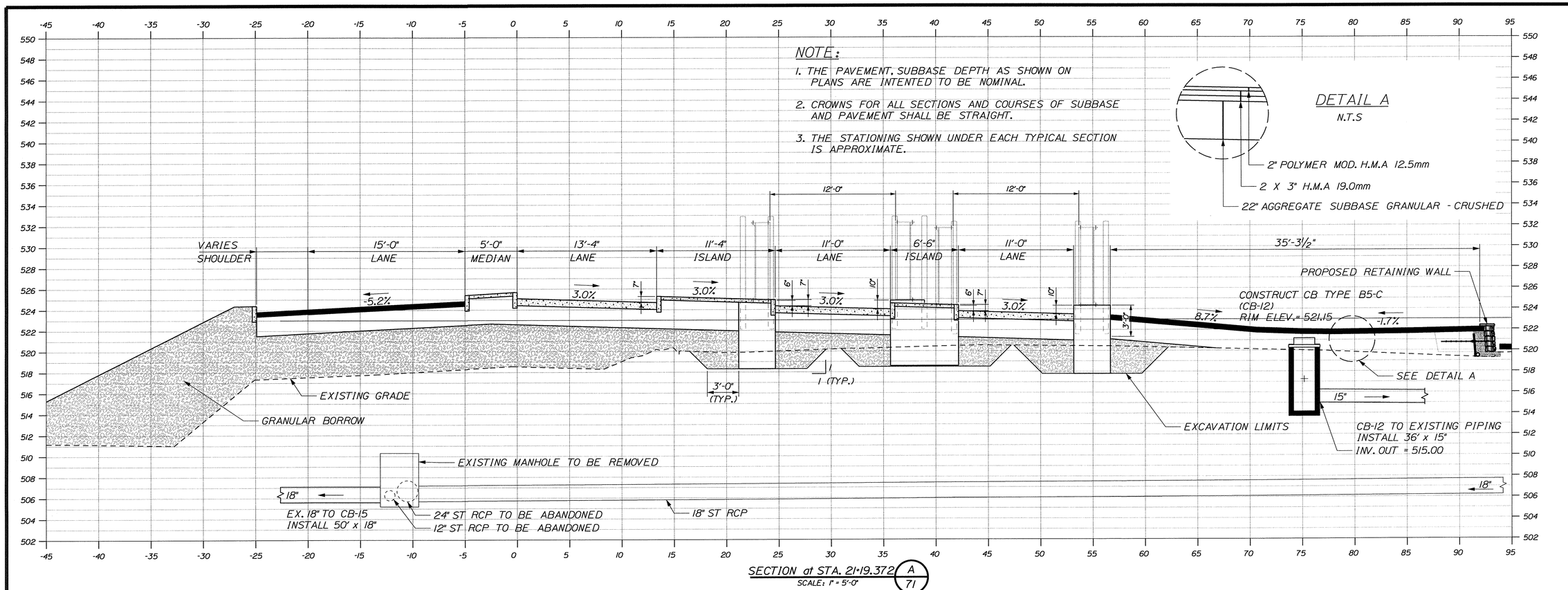

SECTION at STA. 21+19.372 (A / 71)

SCALE: 1" = 5'-0"

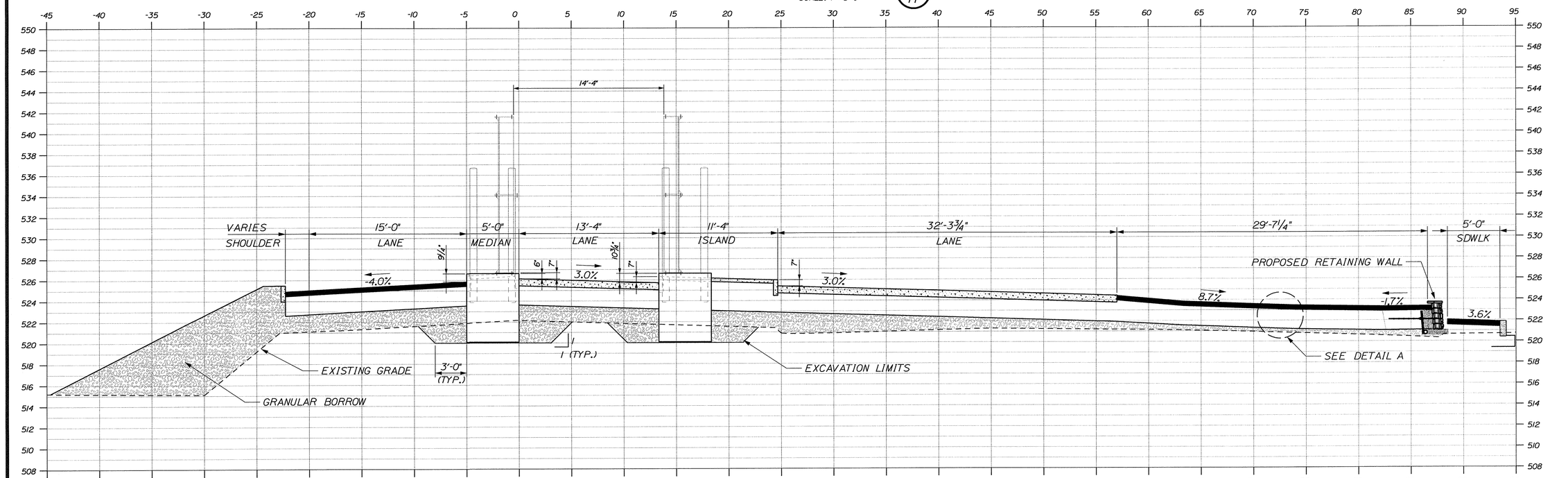

SECTION at STA. 21+04.956 (B / 71)

SCALE: 1" = 5'-0"

STATE OF MAINE
DEPARTMENT OF TRANSPORTATION

BR-1004(210)X

PIN 10042.10

BRIDGE PLANS

BRIDGE NO. _____

STATE OF MAINE · BRIAN L. DORCAS · No.9463 · PROFESSIONAL ENGINEER

P.E. NUMBER 13094-19

SIGNATURE

DATE

		BY	DATE
PROJ. MANAGER	B.L. DORCAS		
DESIGN-DETAILED		AEC	12-JUN-29
CHECKED-REVIEWED		RWS2	12-JUN-29
DESIGN2-DETAILED2			
DESIGN3-DETAILED3			
REVISIONS 1			
REVISIONS 2			
REVISIONS 3			
REVISIONS 4			
FIELD CHANGES			

INTERNATIONAL BRIDGE APPROACH
SAINT JOHN RIVER
FORT KENT AROOSTOOK

BRIDGE APPROACH CROSS SECTIONS

SHEET NUMBER

68

OF 81

Filename: $file$ Division: $wkgroup$ Username: $user$ Date:$date$

CONTROL POINTS FOR CURBING				
POINT	STATION	OFFSET	X-COORD	Y-COORD
1	200+55.78	16.00' LT.	1770415.548	1367264.229
2	201+09.41	16.00' LT.	1770372.850	1367232.677
3	201+44.35	16.00' LT.	1770345.024	1367211.496
4	202+68.14	16.00' LT.	1770252.246	1367132.138
5	203+08.63	16.00' LT.	1770224.644	1367103.939
6	204+01.90	16.00' LT.	1770161.075	1367035.082
7	204+34.71	16.00' LT.	1770137.906	1367011.816
8	205+04.24	16.00' LT.	1770084.783	1366963.977
9	200+55.78	16.00' RT.	1770397.010	1367290.312
10	200+58.69	16.00' RT.	1770394.642	1367288.629
11	200+86.48	16.00' RT.	1770371.934	1367271.995
12	201+32.65	16.00' RT.	1770334.968	1367244.047
13	201+77.59	16.00' RT.	1770298.828	1367216.067
14	202+03.44	16.00' RT.	1770278.840	1367199.227
15	21+95.45	48.98' LT.	1770226.405	1367191.701
16	20+92.41	20.56' LT.	1770136.309	1367249.216
17	20+48.16	16.42' RT.	1770079.216	1367257.332
18	20+50.02	16.56' RT.	1770080.357	1367255.857
19	20+54.55	19.80' RT.	1770080.988	1367250.321
20	20+76.31	58.20' RT.	1770067.025	1367208.447
21	20+92.16	78.50' RT.	1770062.558	1367183.082
22	204+00.25	16.00' RT.	1770139.534	1367058.804
23	205+04.83	16.00' RT.	1770064.614	1366988.799
24	SEE	NOTE 5	1770136.109	1367226.192
25	SEE	NOTE 5	1770183.091	1367174.063
26	SEE	NOTE 5	1770183.262	1367173.800
27	SEE	NOTE 5	1770184.702	1367170.568
28	SEE	NOTE 5	1770184.458	1367169.418
29	SEE	NOTE 5	1770183.854	1367168.874
30	SEE	NOTE 5	1770182.685	1367168.750
31	SEE	NOTE 5	1770179.621	1367170.518
32	SEE	NOTE 5	1770179.378	1367170.714
33	SEE	NOTE 5	1770132.395	1367222.845
34	SEE	NOTE 5	1770122.490	1367213.919
35	SEE	NOTE 5	1770157.493	1367175.081
36	SEE	NOTE 5	1770169.767	1367161.462
37	SEE	NOTE 5	1770172.680	1367158.230
38	SEE	NOTE 5	1770172.916	1367157.768
39	SEE	NOTE 5	1770174.024	1367152.565
40	SEE	NOTE 5	1770173.715	1367151.613
41	SEE	NOTE 5	1770169.502	1367147.816
42	SEE	NOTE 5	1770166.676	1367147.963
43	SEE	NOTE 5	1770161.348	1367153.875
44	SEE	NOTE 5	1770149.074	1367167.493
45	SEE	NOTE 5	1770123.161	1367196.246
46	SEE	NOTE 5	1770118.474	1367201.447
47	SEE	NOTE 5	1770118.253	1367201.692
48	SEE	NOTE 5	1770118.082	1367201.954
49	SEE	NOTE 5	1770111.984	1367215.634
50	SEE	NOTE 5	1770112.228	1367216.785
51	SEE	NOTE 5	1770112.751	1367217.256
52	SEE	NOTE 5	1770114.990	1367188.881
53	SEE	NOTE 5	1770143.235	1367157.541
54	SEE	NOTE 5	1770151.269	1367148.627
55	SEE	NOTE 5	1770156.391	1367142.944
56	SEE	NOTE 5	1770156.559	1367142.685

CONTROL POINTS FOR CURBING				
POINT	STATION	OFFSET	X-COORD	Y-COORD
57	SEE	NOTE 5	1770158.356	1367138.701
58	SEE	NOTE 5	1770156.748	1367136.321
59	SEE	NOTE 5	1770155.578	1367136.198
60	SEE	NOTE 5	1770151.802	1367138.398
61	SEE	NOTE 5	1770151.562	1367138.592
62	SEE	NOTE 5	1770146.440	1367144.275
63	SEE	NOTE 5	1770138.407	1367153.189
64	SEE	NOTE 5	1770110.161	1367184.530
65	SEE	NOTE 5	1770105.474	1367189.730
66	SEE	NOTE 5	1770105.387	1367189.827
67	SEE	NOTE 5	1770105.218	1367190.086
68	SEE	NOTE 5	1770103.421	1367194.071
69	SEE	NOTE 5	1770103.665	1367195.221
70	SEE	NOTE 5	1770105.029	1367196.450
71	SEE	NOTE 5	1770106.199	1367196.574
72	SEE	NOTE 5	1770109.975	1367194.374
73	SEE	NOTE 5	1770110.214	1367194.180
74	SEE	NOTE 5	1770110.302	1367194.082
75	SEE	NOTE 5	1770158.112	1367137.551
76	SEE	NOTE 5	1770299.870	1367175.128
77	SEE	NOTE 5	1770293.853	1367169.856
78	SEE	NOTE 5	1770166.481	1367040.979
79	SEE	NOTE 5	1770272.337	1367194.512
80	SEE	NOTE 5	1770126.605	1367257.840
81	SEE	NOTE 5	1770064.393	1367199.334
82	SEE	NOTE 5	1770062.611	1367185.689

NOTE :

HORIZONTAL

* COORDINATES SHOWN ARE A STRAIGHT CONVERSION FROM METRIC TO IMPERIAL

POINT	COORDINATE SYSTEM	X-COORDINATE	Y-COORDINATE
NBDOT 6	NB ATS77	140818.933	885330.298
	ME 2000-M	539522.941	416725.698
	* ME 2000-IMP STRAIGHT CONVERSION	1770088.389	1367210.295
	ME 2000-IMP CALCULATED	1770084.848	1367207.561
NBDOT 8	NB ATS77	140920.578	885420.416
	ME 2000-M	539621.448	416819.183
	* ME 2000-IMP STRAIGHT CONVERSION	1770411.575	1367517.005
	ME 2000-IMP CALCULATED	1770408.034	1367514.271

THERE IS ALSO A ROTATION IN THE GRID FROM NB TO MAINE = + 1.9415 DEGREES OR FROM MAINE TO NB = - 1.9415 DEGREES

VERTICAL

ELEVATIONS SHOWN ARE BASED ON NB GEODETIC CONVERTED TO IMPERIAL. FOR CONVERSION SEE BELOW

FROM NB GEODETIC TO MAINE = -86 mm
FROM MAINE TO NB GEODETIC = +86 mm

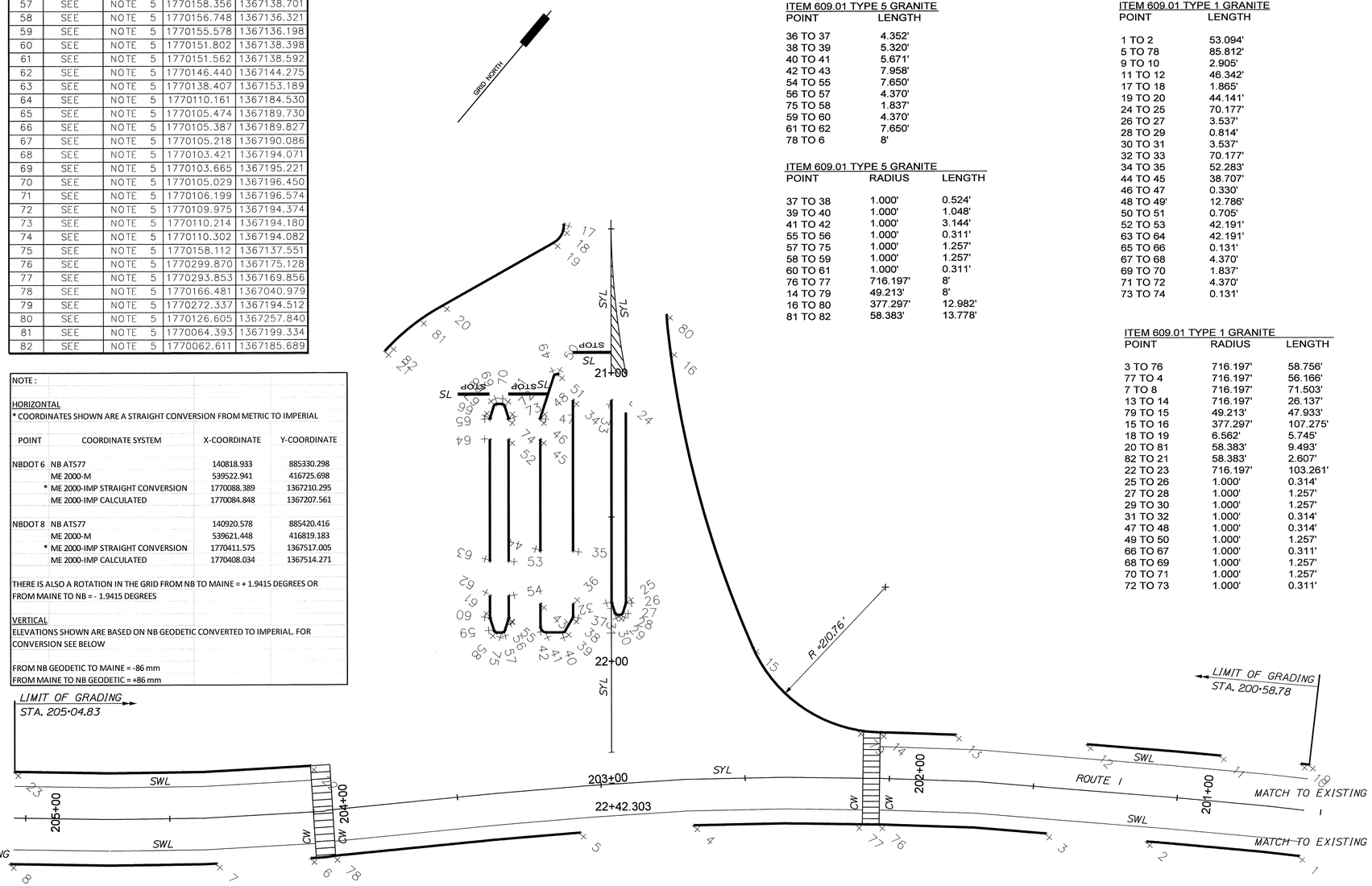

ITEM 609.01 TYPE 5 GRANITE

POINT	LENGTH
36 TO 37	4.352'
38 TO 39	5.320'
40 TO 41	5.671'
42 TO 43	7.958'
54 TO 55	7.650'
56 TO 57	4.370'
75 TO 58	1.837'
59 TO 60	4.370'
61 TO 62	7.650'
78 TO 6	8'

ITEM 609.01 TYPE 5 GRANITE

POINT	RADIUS	LENGTH
37 TO 38	1.000'	0.524'
39 TO 40	1.000'	1.048'
41 TO 42	1.000'	3.144'
55 TO 56	1.000'	0.311'
57 TO 75	1.000'	1.257'
58 TO 59	1.000'	1.257'
60 TO 61	1.000'	0.311'
76 TO 77	716.197'	8'
14 TO 79	49.213'	8'
16 TO 80	377.297'	12.982'
81 TO 82	58.383'	13.778'

ITEM 609.01 TYPE 1 GRANITE

POINT	LENGTH
1 TO 2	53.094'
5 TO 78	85.812'
9 TO 10	2.905'
11 TO 12	46.342'
17 TO 18	1.865'
19 TO 20	44.141'
24 TO 25	70.177'
26 TO 27	3.537'
28 TO 29	0.814'
30 TO 31	3.537'
32 TO 33	70.177'
34 TO 35	52.283'
44 TO 45	38.707'
46 TO 47	0.330'
48 TO 49'	12.786'
50 TO 51	0.705'
52 TO 53	42.191'
63 TO 64	42.191'
65 TO 66	0.131'
67 TO 68	4.370'
69 TO 70	1.837'
71 TO 72	4.370'
73 TO 74	0.131'

ITEM 609.01 TYPE 1 GRANITE

POINT	RADIUS	LENGTH
3 TO 76	716.197'	58.756'
77 TO 4	716.197'	56.166'
7 TO 8	716.197'	71.503'
13 TO 14	716.197'	26.137'
79 TO 15	49.213'	47.933'
15 TO 16	377.297'	107.275'
18 TO 19	6.562'	5.745'
20 TO 81	58.383'	9.493'
82 TO 21	58.383'	2.607'
22 TO 23	716.197'	103.261'
25 TO 26	1.000'	0.314'
27 TO 28	1.000'	1.257'
29 TO 30	1.000'	1.257'
31 TO 32	1.000'	0.314'
47 TO 48	1.000'	0.314'
49 TO 50	1.000'	1.257'
66 TO 67	1.000'	0.311'
68 TO 69	1.000'	1.257'
70 TO 71	1.000'	1.257'
72 TO 73	1.000'	0.311'

NOTES:

1. ALL PROPOSED WORK SHALL BE IN ACCORDANCE WITH THE "MANUAL ON UNIFORM TRAFFIC CONTROL DEVICES FOR STREETS AND HIGHWAYS" U.S.D.O.T., F.H.W.A. LATEST EDITION.

2. THE CONTRACTOR SHALL REMOVE ALL EXISTING PAVEMENT MARKINGS THAT CONFLICT WITH PROPOSED MARKINGS (INCIDENTAL TO ITEM 627).

3. STOP BARS TO BE 24" IN WIDTH.

4. SEE DWG. 73 FOR HIGHWAY GEOMETRY.

5. SEE DWG. 22 & 61 FOR ISLAND DETAILS.

6. REMOVE AND SALVAGE ALL EXISTING GRANITE CURBING.

STRIPING LEGEND
SYL - 4" SOLID YELLOW LINE
SL - 24" STOP LINE
CW - 12" CROSS WALK STRIPE
SWL - 4" SOILD WHITE LINE

STATE OF MAINE
DEPARTMENT OF TRANSPORTATION

BR-1004(210)X

PIN 10042.10

BRIDGE PLANS

BRIDGE NO. _____

STATE OF MAINE BRIAN L. DORCAS No.9463 LICENSED PROFESSIONAL ENGINEER

		BY	DATE
PROJ. MANAGER	B.L. DORCAS		
DESIGN-DETAILED	NWR	NWR	12.JUN.29
CHECKED-REVIEWED	EWEQ	RWS2	12.JUN.29
DESIGN2-DETAILED2	ILED2		
DESIGN3-DETAILED3	ILED3		
REVISIONS 1			
REVISIONS 2			
REVISIONS 3			
REVISIONS 4			
FIELD CHANGES			

P.E. NUMBER
12-06-29
DATE

INTERNATIONAL BRIDGE APPROACH
SAINT JOHN RIVER
FORT KENT AROOSTOOK

GEOMETRIC, CURBING and STRIPING PLANS

SHEET NUMBER
69
OF 81

Filename: $file$ Division: $wkgroup$ Username: $user$ Date:$date$

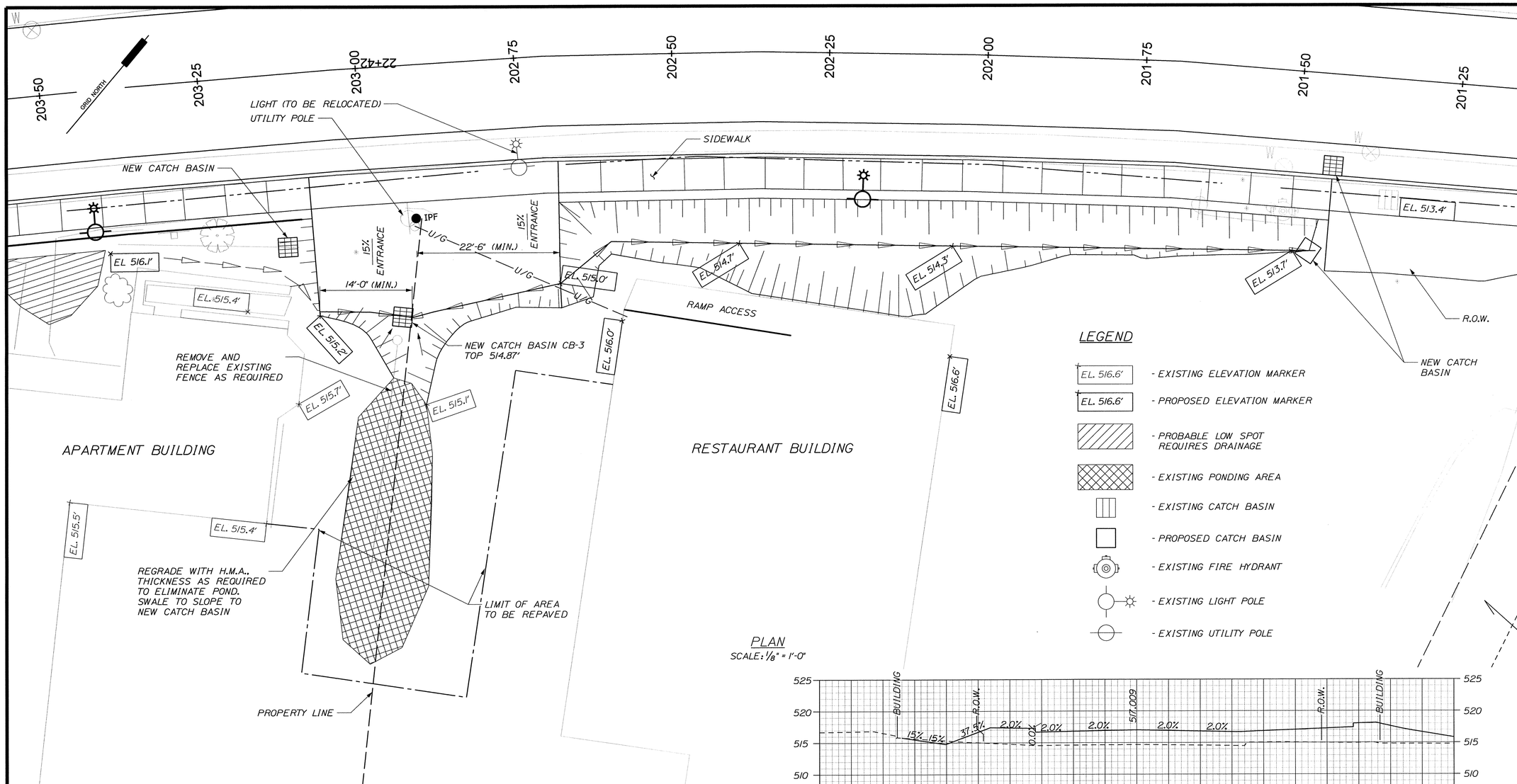

PLAN
SCALE: 1/8" = 1'-0"

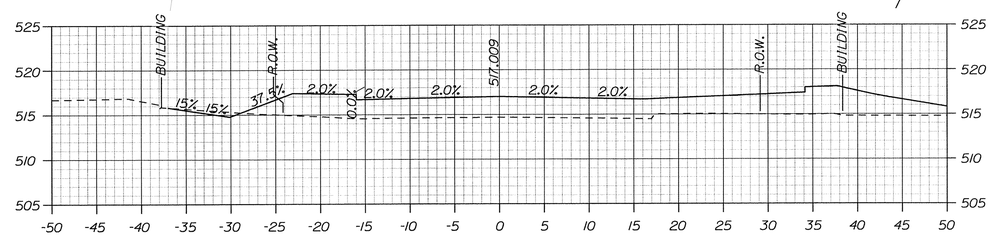

CROSS SECTION
STA. 202+40
SCALE: 1/8" = 1'-0"

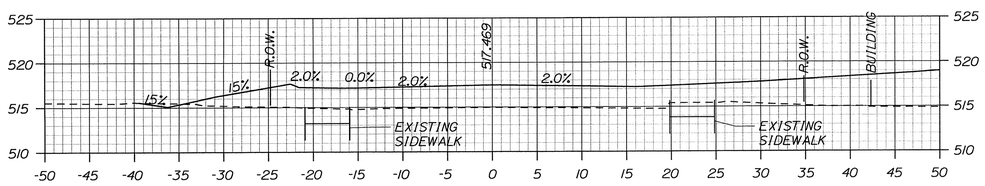

CROSS SECTION
STA. 202+70
SCALE: 1/8" = 1'-0"

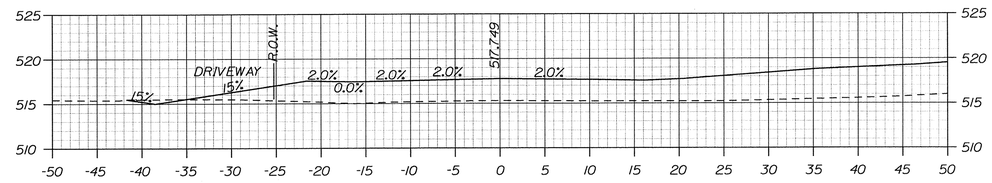

CROSS SECTION
STA. 203+00
SCALE: 1/8" = 1'-0"

STATE OF MAINE
DEPARTMENT OF TRANSPORTATION

BR-1004(210)X

PIN 10042.10

BRIDGE PLANS

BRIDGE NO. ____

STATE OF MAINE
BRIAN L. DORCAS
No.5463
LICENSED
PROFESSIONAL ENGINEER

P.E. NUMBER
12-06-22
SIGNATURE DATE

PROJ. MANAGER	B.L. DORCAS		
DESIGN-DETAILED		BY	DATE
CHECKED-REVIEWED		AEG	12-JUN-23
DESIGN2-DETAILED2		RWS2	12-JUN-23
DESIGN3-DETAILED3			
REVISIONS 1			
REVISIONS 2			
REVISIONS 3			
REVISIONS 4			
FIELD CHANGES			

INTERNATIONAL BRIDGE APPROACH
SAINT JOHN RIVER
FORT KENT AROOSTOOK

APARTMENT and RESTAURANT SITE DRAINAGE

SHEET NUMBER
70
OF 81

Filename: $file$ Division: $wkgroup$ Username: $user$ Date:$date$

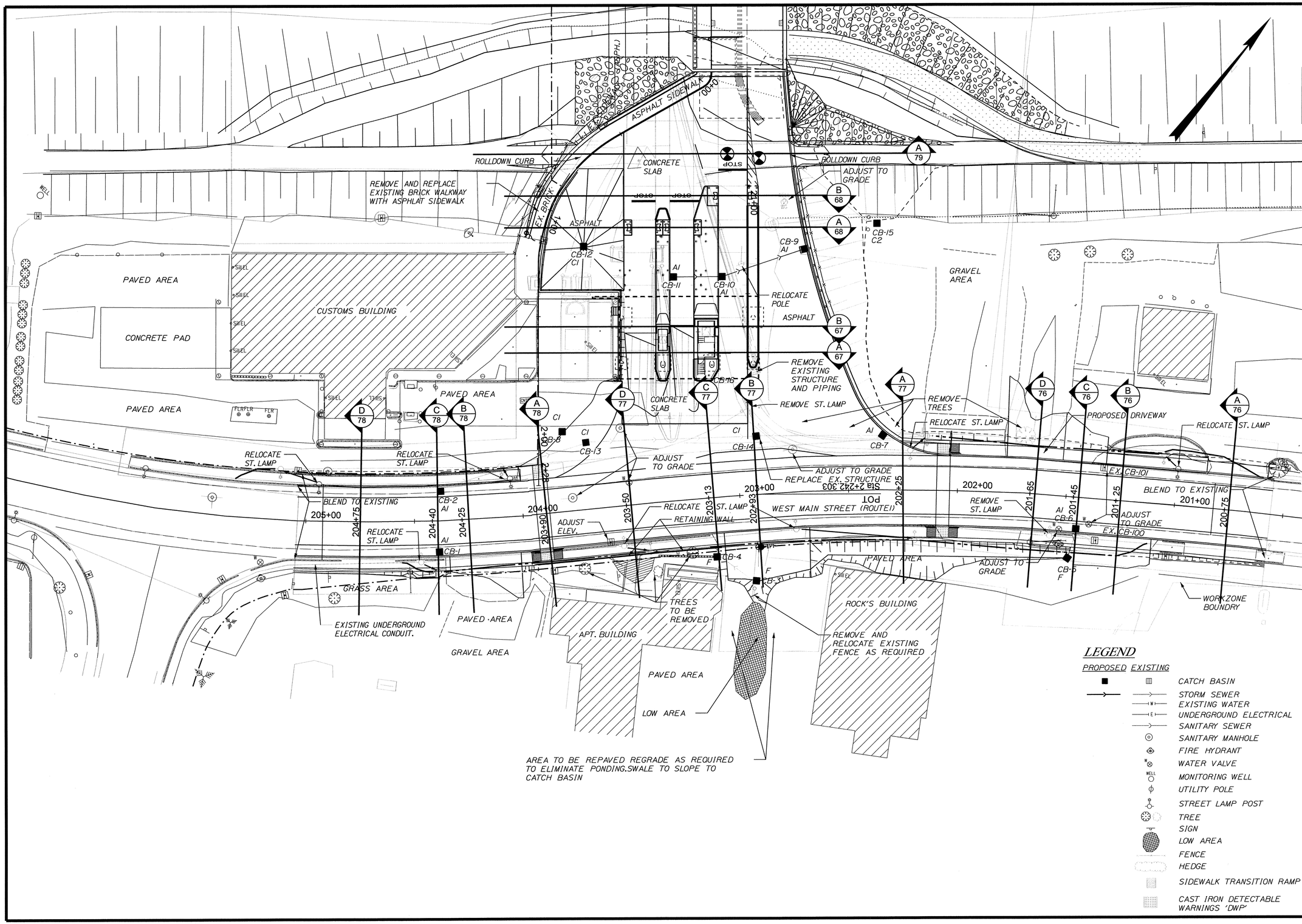

STATE OF MAINE
DEPARTMENT OF TRANSPORTATION

BR-1004(210)X

PIN 10042.10

BRIDGE PLANS

BRIDGE NO. ____

STATE OF MAINE · BRIAN L. DORCAS · No.9463 · PROFESSIONAL ENGINEER

P.E. NUMBER 12-06-29

SIGNATURE

DATE

PROJ. MANAGER	B.L. DORCAS	BY	DATE
DESIGN-DETAILED	BCA	DJG	12 JUN 29
CHECKED-REVIEWED	GRF	RWS2	12 JUN 29
DESIGN2-DETAILED2			
DESIGN3-DETAILED3			
REVISIONS 1			
REVISIONS 2			
REVISIONS 3			
REVISIONS 4			
FIELD CHANGES			

INTERNATIONAL BRIDGE APPROACH
SAINT JOHN RIVER
AROOSTOOK
FORT KENT

LANDSCAPE SITE PLAN

SHEET NUMBER

71

OF 81

Filename: $file$ Division: $wkgroup$ Username: $user$ Date:$date$

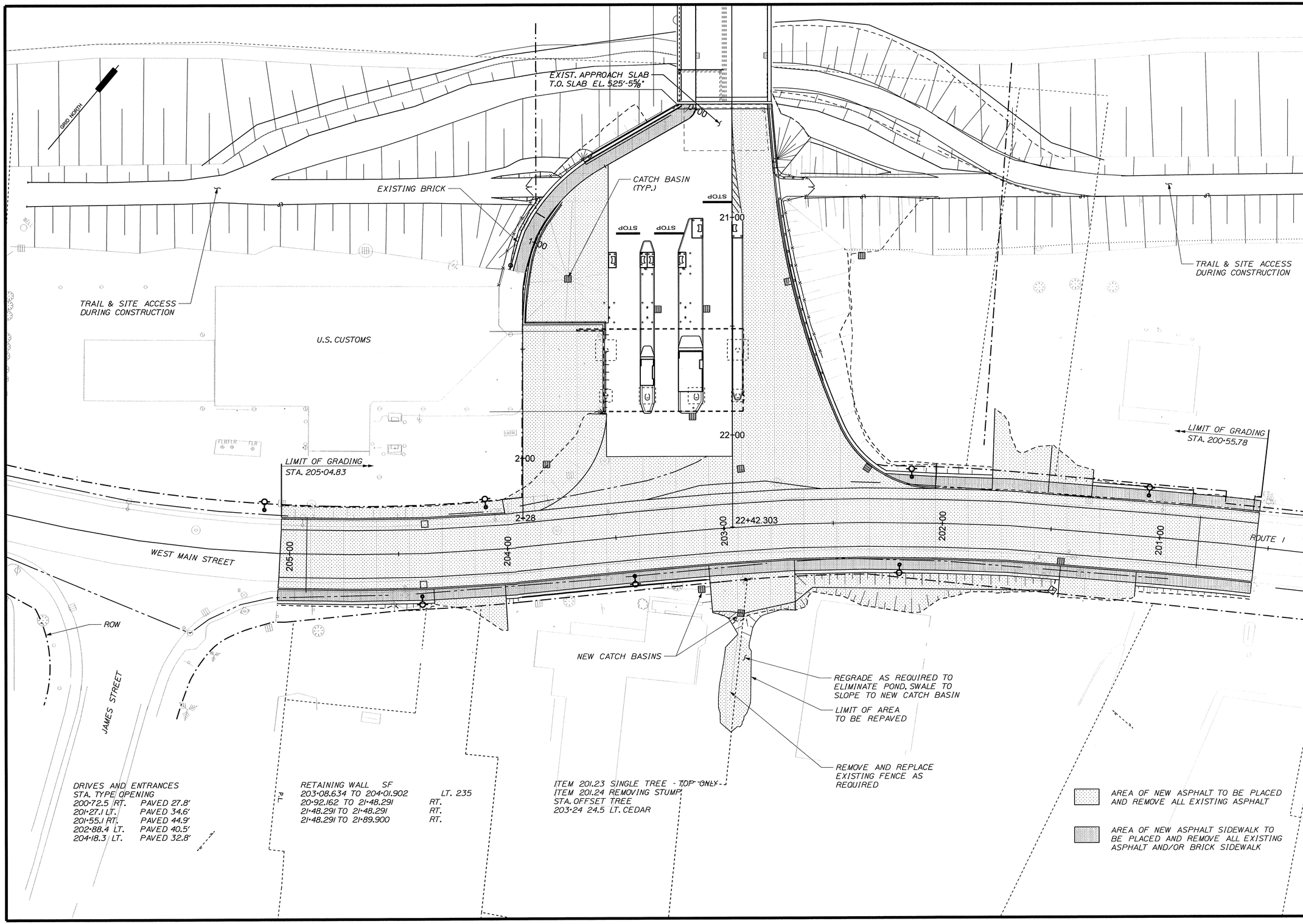

STATE OF MAINE
DEPARTMENT OF TRANSPORTATION

BR-1004(210)X

PIN
10042.10

BRIDGE PLANS

BRIDGE NO. ____

STATE OF MAINE
BRIAN L. DORCAS
No.9463
12/29/29
PROFESSIONAL ENGINEER

P.E. NUMBER
12-06-29
DATE

SIGNATURE

		BY	DATE
PROJ. MANAGER	B.L. DORCAS		
DESIGN-DETAILED	NWR	AEC	12.JUN.29
CHECKED-REVIEWED		RWS2	12.JUN.29
DESIGN2-DETAILED2			
DESIGN3-DETAILED3			
REVISIONS 1			
REVISIONS 2			
REVISIONS 3			
REVISIONS 4			
FIELD CHANGES			

INTERNATIONAL BRIDGE APPROACH
SAINT JOHN RIVER
FORT KENT AROOSTOOK

HIGHWAY PLANS

SHEET NUMBER
72
OF 81

Filename: $file$ Division: $wkgroup$ Username: $user$ Date:$date$

ROUTE I HORIZONTAL

Station	Point	Easting (X)	Northing (Y)	Elevation (Z)
200+55.780	POT	1770406.282	1367277.273	513.684
200+60.000	POT	1770402.842	1367274.828	513.696
200+65.000	POT	1770398.767	1367271.931	513.713
200+68.448	PI	1770395.956	1367269.934	513.721
200+70.000	POT	1770394.712	1367269.007	513.736
200+75.000	POT	1770390.701	1367266.021	513.765
200+80.000	POT	1770386.691	1367263.034	513.800
200+85.000	POT	1770382.681	1367260.048	513.840
200+90.000	POT	1770378.670	1367257.062	513.887
200+95.000	POT	1770374.660	1367254.076	513.939
201+00.000	POT	1770370.650	1367251.090	513.997
201+01.767	PI	1770369.232	1367250.035	513.979
201+05.000	POT	1770366.660	1367248.076	514.061
201+10.000	POT	1770362.683	1367245.046	514.131
201+15.000	POT	1770358.706	1367242.016	514.207
201+20.000	POT	1770354.728	1367238.986	514.288
201+25.000	POT	1770350.751	1367235.956	514.376
201+30.000	POT	1770346.773	1367232.926	514.469
201+35.000	POT	1770342.796	1367229.896	514.568
201+35.883	PI	1770342.093	1367229.361	514.261
201+40.000	POT	1770338.815	1367226.871	514.673
201+45.000	POT	1770334.833	1367223.847	514.784
201+50.000	POT	1770330.851	1367220.823	514.901
201+55.000	POT	1770326.870	1367217.799	515.023
201+60.000	POT	1770322.888	1367214.774	515.145
201+65.000	POT	1770318.906	1367211.750	515.267
201+69.584	PI	1770315.256	1367208.978	514.335
201+70.000	POT	1770314.937	1367208.710	515.390
201+75.000	POT	1770311.111	1367205.491	515.512
201+80.000	POT	1770307.285	1367202.273	515.635
201+85.000	POT	1770303.458	1367199.054	515.757
201+90.000	POT	1770299.632	1367195.836	515.879
201+95.000	POT	1770295.806	1367192.617	516.002
202+00.000	POT	1770291.979	1367189.399	516.124
202+02.407	PI	1770290.137	1367187.849	514.650
202+05.000	POT	1770288.183	1367186.144	516.247
202+10.000	POT	1770284.416	1367182.857	516.369
202+15.000	POT	1770280.649	1367179.569	516.488
202+20.000	POT	1770276.882	1367176.282	516.602
202+25.000	POT	1770273.114	1367172.994	516.711
202+30.000	POT	1770269.347	1367169.707	516.816
202+35.000	POT	1770265.580	1367166.419	516.915
202+36.046	PI	1770264.791	1367165.731	514.941
202+40.000	POT	1770261.901	1367163.034	517.009
202+45.000	POT	1770258.246	1367159.622	517.098
202+50.000	POT	1770254.590	1367156.211	517.182
202+55.000	POT	1770250.935	1367152.800	517.262
202+60.000	POT	1770247.279	1367149.388	517.336
202+65.000	POT	1770243.624	1367145.977	517.405
202+70.000	POT	1770239.968	1367142.566	517.469
202+70.583	PI	1770239.542	1367142.168	515.247
202+75.000	POT	1770236.453	1367139.010	517.528
202+80.000	POT	1770232.957	1367135.436	517.582
202+85.000	POT	1770229.460	1367131.862	517.632
202+90.000	POT	1770225.964	1367128.288	517.676
202+95.000	POT	1770222.467	1367124.714	517.715
203+00.000	POT	1770218.971	1367121.140	517.749
203+04.046	PI	1770216.142	1367118.248	515.628
203+05.000	POT	1770215.487	1367117.553	517.778
203+10.000	POT	1770212.060	1367113.913	517.802
203+15.000	POT	1770208.632	1367110.273	517.822
203+20.000	POT	1770205.204	1367106.633	517.836
203+25.000	POT	1770201.776	1367102.992	517.845
203+30.000	POT	1770198.349	1367099.352	517.849
203+35.000	POT	1770194.921	1367095.712	517.848
203+37.810	PI	1770192.995	1367093.667	515.840
203+40.000	POT	1770191.517	1367092.050	517.842
203+45.000	POT	1770188.143	1367088.360	517.831
203+50.000	POT	1770184.768	1367084.670	517.815
203+55.000	POT	1770181.394	1367080.980	517.795
203+60.000	POT	1770178.020	1367077.291	517.769
203+65.000	POT	1770174.646	1367073.601	517.738
203+70.000	POT	1770171.272	1367069.911	517.702
203+70.294	PI	1770171.073	1367069.693	516.198
203+75.000	POT	1770167.896	1367066.222	517.661
203+80.000	POT	1770164.520	1367062.534	517.615
203+85.000	POT	1770161.145	1367058.846	517.565
203+90.000	POT	1770157.769	1367055.157	517.513
203+95.000	POT	1770154.393	1367051.469	517.462
203+96.020	PI	1770153.867	1367050.530	516.380
204+00.000	POT	1770151.062	1367047.706	517.414
204+05.000	POT	1770147.539	1367044.158	517.373
204+06.295	PI	1770146.627	1367043.240	516.496
204+10.000	POT	1770144.012	1367040.615	517.337
204+15.000	POT	1770140.483	1367037.073	517.307
204+20.000	POT	1770136.954	1367033.530	517.283
204+25.000	POT	1770133.425	1367029.988	517.265
204+30.000	POT	1770129.896	1367026.446	517.253
204+35.000	POT	1770126.367	1367022.904	517.247
204+38.160	PI	1770124.137	1367020.665	517.009
204+40.000	POT	1770122.785	1367019.418	517.246
204+45.000	POT	1770119.110	1367016.027	517.252
204+50.000	POT	1770115.435	1367012.636	517.263
204+55.000	POT	1770111.760	1367009.246	517.280
204+60.000	POT	1770108.086	1367005.855	517.303
204+65.000	POT	1770104.411	1367002.465	517.330
204+70.000	POT	1770100.736	1366999.074	517.357
204+70.880	PI	1770100.089	1366998.477	517.364
204+75.000	POT	1770096.982	1366995.772	517.384
204+80.000	POT	1770093.212	1366992.488	517.411
204+85.000	POT	1770089.441	1366989.204	517.438
204+90.000	POT	1770085.671	1366985.920	517.465
204+95.000	POT	1770081.900	1366982.637	517.492
205+00.000	POT	1770078.130	1366979.353	517.519
205+03.989	PI	1770075.122	1366976.733	517.542
205+04.830	POT	1770074.459	1366976.215	0.000

BRIDGE APPROACH HORIZONTAL

Station	Point	Easting (X)	Northing (Y)	Elevation (Z)
20+35.000	POT	1770082.602	1367278.100	531.269
20+40.000	POT	1770085.950	1367274.385	530.869
20+45.000	POT	1770089.297	1367270.671	530.469
20+50.000	POT	1770092.644	1367266.957	530.092
20+55.000	POT	1770095.992	1367263.243	529.731
20+60.000	POT	1770099.339	1367259.529	529.371
20+65.000	POT	1770102.686	1367255.814	529.011
20+70.000	POT	1770106.034	1367252.100	528.650
20+75.000	POT	1770109.381	1367248.386	528.290
20+80.000	POT	1770112.729	1367244.672	527.930
20+85.000	POT	1770116.076	1367240.958	527.569
20+90.000	POT	1770119.423	1367237.244	527.209
20+95.000	POT	1770122.771	1367233.529	526.848
21+00.000	POT	1770126.118	1367229.815	526.488
21+05.000	POT	1770129.465	1367226.101	526.128
21+10.000	POT	1770132.813	1367222.387	525.767
21+15.000	POT	1770136.160	1367218.673	525.407
21+20.000	POT	1770139.508	1367214.959	525.047
21+25.000	POT	1770142.855	1367211.244	524.686
21+30.000	POT	1770146.202	1367207.530	524.326
21+35.000	POT	1770149.550	1367203.816	523.966
21+40.000	POT	1770152.897	1367200.102	523.605
21+45.000	POT	1770156.245	1367196.388	523.245
21+50.000	POT	1770159.592	1367192.674	522.884
21+55.000	POT	1770162.939	1367188.959	522.524
21+60.000	POT	1770166.287	1367185.245	522.164
21+65.000	POT	1770169.634	1367181.531	521.803
21+70.000	POT	1770172.981	1367177.817	521.443
21+75.000	POT	1770176.329	1367174.103	521.083
21+80.000	POT	1770179.676	1367170.389	520.722
21+85.000	POT	1770183.024	1367166.674	520.362
21+90.000	POT	1770186.371	1367162.960	520.001
21+95.000	POT	1770189.718	1367159.246	519.641
22+00.000	POT	1770193.066	1367155.532	519.281
22+05.000	POT	1770196.413	1367151.818	518.920
22+10.000	POT	1770199.760	1367148.104	518.560
22+15.000	POT	1770203.108	1367144.389	518.200
22+20.000	POT	1770206.455	1367140.675	517.839
22+25.000	POT	1770209.803	1367136.961	517.479
22+30.000	POT	1770213.150	1367133.247	517.467
22+35.000	POT	1770216.497	1367129.533	517.568
22+40.000	POT	1770219.845	1367125.819	517.669
22+42.303	POT	1770221.387	1367124.107	517.715

ROUTE I SUPERELEVATION

	LEFT		RIGHT	
Station	Fin. Grad Subgrade	e Mode	Fin. Grade Subgrade	Mode
0+00.000	-0.020 -0.020	Constant	-0.020 -0.020	Constant
202+55.000	-0.020 -0.020	Constant	-0.020 -0.020	Linear
202+80.000	-0.020 -0.020	Constant	-0.010 -0.010	Constant
203+10.000	-0.020 -0.020	Constant	-0.010 -0.010	Linear
203+35.000	-0.020 -0.020	Constant	-0.020 -0.020	Constant

NOTE :

HORIZONTAL

* COORDINATES SHOWN ARE A STRAIGHT CONVERSION FROM METRIC TO IMPERIAL

POINT	COORDINATE SYSTEM	X-COORDINATE	Y-COORDINATE
NBDOT 6	NB ATS77	140818.933	885330.298
	ME 2000-M	539522.941	416725.698
	* ME 2000-IMP STRAIGHT CONVERSION	1770088.389	1367210.295
	ME 2000-IMP CALCULATED	1770084.848	1367207.561
NBDOT 8	NB ATS77	140920.578	885420.416
	ME 2000-M	539621.448	416819.183
	* ME 2000-IMP STRAIGHT CONVERSION	1770411.575	1367517.005
	ME 2000-IMP CALCULATED	1770408.034	1367514.271

THERE IS ALSO A ROTATION IN THE GRID FROM NB TO MAINE = + 1.9415 DEGREES OR FROM MAINE TO NB = - 1.9415 DEGREES

VERTICAL

ELEVATIONS SHOWN ARE BASED ON NB GEODETIC CONVERTED TO IMPERIAL. FOR CONVERSION SEE BELOW

FROM NB GEODETIC TO MAINE = -86 mm
FROM MAINE TO NB GEODETIC = +86 mm

BRIDGE APPROACH SIDEWALK HORIZONTAL

Station	Point	Easting (X)	Northing (Y)	Elevation (Z)
0+00.000	POT	1770080.211	1367255.756	530.477
0+05.000	POT	1770081.076	1367250.922	530.416
0+10.000	POT	1770079.639	1367246.146	530.047
0+15.000	POT	1770078.053	1367241.404	529.576
0+20.000	POT	1770076.467	1367236.663	529.105
0+25.000	POT	1770074.880	1367231.921	528.635
0+30.000	POT	1770073.294	1367227.179	528.164
0+35.000	POT	1770071.708	1367222.438	527.693
0+40.000	POT	1770070.121	1367217.696	527.223
0+45.000	POT	1770068.535	1367212.954	526.752
0+50.000	POT	1770066.949	1367208.213	526.281
0+55.000	POT	1770065.440	1367203.446	525.783
0+60.000	POT	1770064.235	1367198.594	525.275
0+65.000	POT	1770063.352	1367193.674	524.766
0+70.000	POT	1770062.795	1367188.706	524.258
0+75.000	POT	1770062.565	1367183.712	523.751
0+80.000	POT	1770062.663	1367178.714	523.243
0+85.000	POT	1770063.090	1367173.733	522.736
0+90.000	POT	1770063.838	1367168.846	522.213
0+95.000	POT	1770064.948	1367163.971	521.743
1+00.000	POT	1770066.728	1367159.365	521.186
1+05.000	POT	1770068.729	1367155.080	520.706
1+10.000	POT	1770070.930	1367150.590	520.236
1+13.965	POT	1770072.675	1367147.029	519.862

STATE OF MAINE
DEPARTMENT OF TRANSPORTATION

BR-1004(210)X

BRIDGE NO. ____ PIN 10042.10 BRIDGE PLANS

STATE OF MAINE ★ BRIAN L. DORCAS No.9463 ★ LICENSED PROFESSIONAL ENGINEER

SIGNATURE

P.E. NUMBER 12-06-20

DATE

PROJ. MANAGER	B.L. DORCAS	BY	DATE
DESIGN-DETAILED	NWR	NWR	12.JUN.29
CHECKED-REVIEWED		RWS2	12.JUN.29
DESIGN2-DETAILED2			
DESIGN3-DETAILED3			
REVISIONS 1			
REVISIONS 2			
REVISIONS 3			
REVISIONS 4			
FIELD CHANGES			

INTERNATIONAL BRIDGE APPROACH
SAINT JOHN RIVER
FORT KENT AROOSTOOK

HIGHWAY GEOMETRY

Filename: $file$ Division: $wkgroup$ Username: $user$ Date:$date$

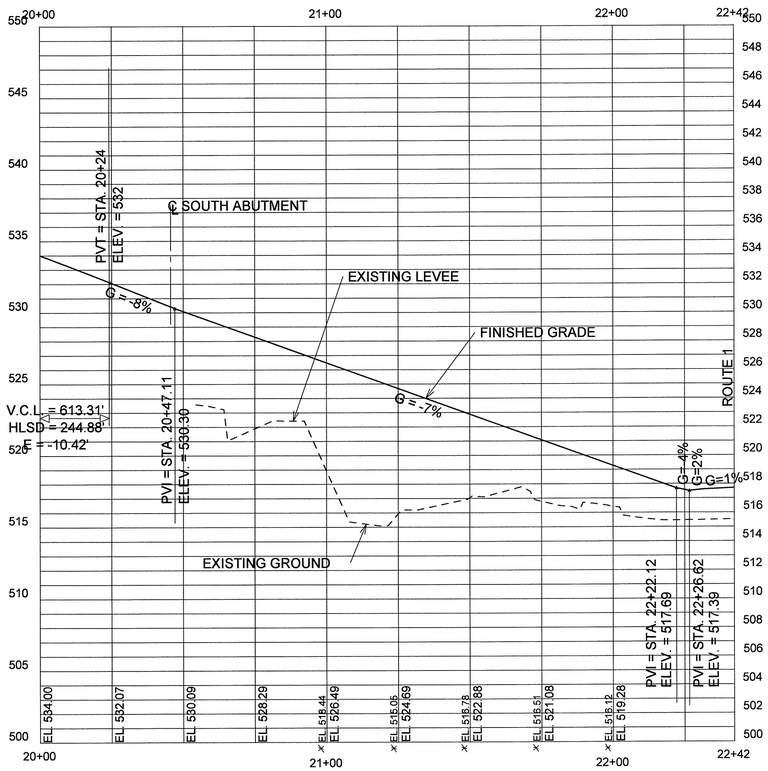

PROFILE
BORDER CROSSING / BRIDGE APPROACH

NOTE: × DENOTES EXISTING GROUND ELEVATION.

STATE OF MAINE
DEPARTMENT OF TRANSPORTATION

BR-1004(210)X

BRIDGE NO. ____

PIN 10042.10

BRIDGE PLANS

STATE OF MAINE
BRIAN L. DORCAS
No.9463
LICENSED
PROFESSIONAL ENGINEER

PROJ. MANAGER	B.L. DORCAS		
DESIGN-DETAILED	NWR	12.JUN.29	
CHECKED-REVIEWED	NWR	RWS2	12.JUN.29
DESIGN2-DETAILED2			
DESIGN3-DETAILED3			
REVISIONS 1			
REVISIONS 2			
REVISIONS 3			
REVISIONS 4			
FIELD CHANGES			

BY | DATE

SIGNATURE

P.E. NUMBER

12-06-29.

DATE

INTERNATIONAL BRIDGE APPROACH
SAINT JOHN RIVER
FORT KENT AROOSTOOK

BRIDGE APPROACH
PROFILE

SHEET NUMBER

74

OF 81

Filename: $file$ Division: $wkgroup$ Username: $user$ Date:$date$

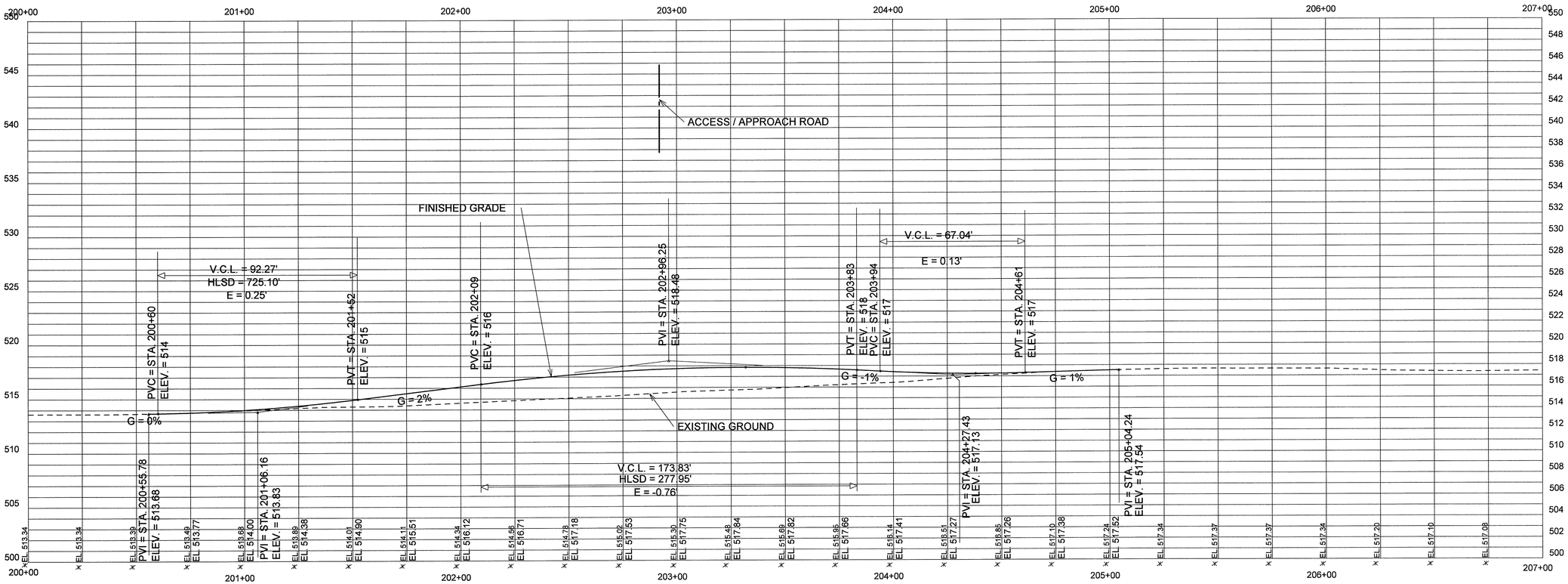

PROFILE
ROUTE 1 / WEST MAIN STREET

NOTE: × DENOTES EXISTING GROUND ELEVATION.

STATE OF MAINE
DEPARTMENT OF TRANSPORTATION

BR-1004(210)X

PIN
10042.10

BRIDGE PLANS

BRIDGE NO. ____

STATE OF MAINE
BRIAN L. DORCAS
No.9463
LICENSED
PROFESSIONAL ENGINEER

P.E. NUMBER

12-06-29

DATE

SIGNATURE

PROJ. MANAGER	B.L. DORCAS		
DESIGN-DETAILED	NWR	NWR	12.JUN.29
CHECKED-REVIEWED		RWS2	12.JUN.29
DESIGN2-DETAILED2			
DESIGN3-DETAILED3			
REVISIONS 1			
REVISIONS 2			
REVISIONS 3			
REVISIONS 4			
FIELD CHANGES			

INTERNATIONAL BRIDGE APPROACH
SAINT JOHN RIVER
FORT KENT AROOSTOOK

ROUTE 1 / WEST MAIN STREET
PROFILE

SHEET NUMBER
75
OF 81

Filename: $file$ Division: $wkgroup$ Username: $user$ Date:$date$

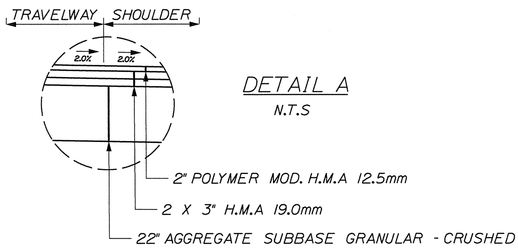

DETAIL A
N.T.S

NOTE:

1. THE PAVEMENT, BASE, SUBBASE DEPTH AS SHOWN ON PLANS ARE INTENTED TO BE NOMINAL.
2. CROWNS FOR ALL SECTIONS AND COURSES OF SUBBASE AND PAVEMENT SHALL BE STRAIGHT.
3. THE STATIONING SHOWN UNDER EACH TYPICAL SECTION IS APPROXIMATE.

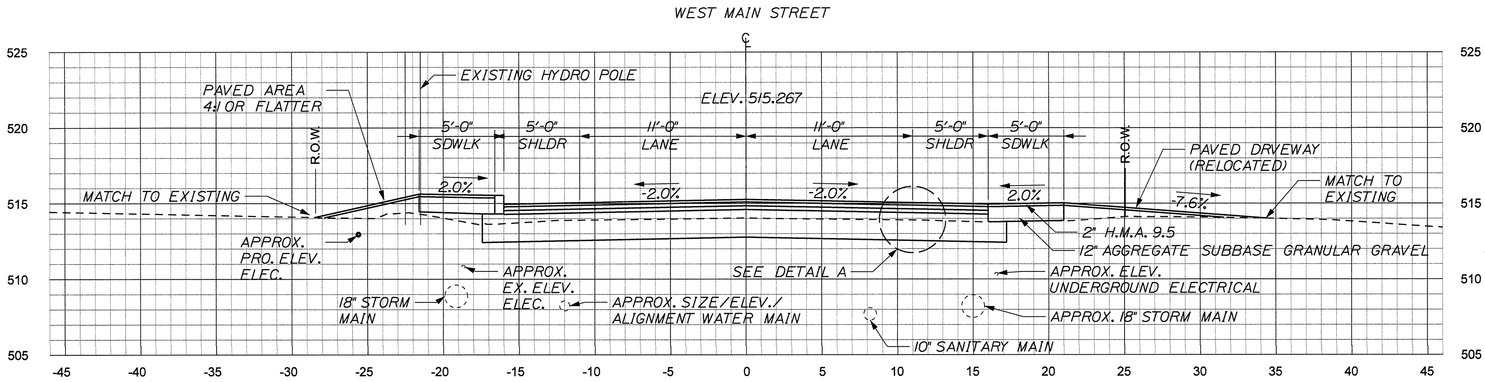

SECTION at STA. 201+65 (D / 71)
SCALE: 3/16" = 1'-0"

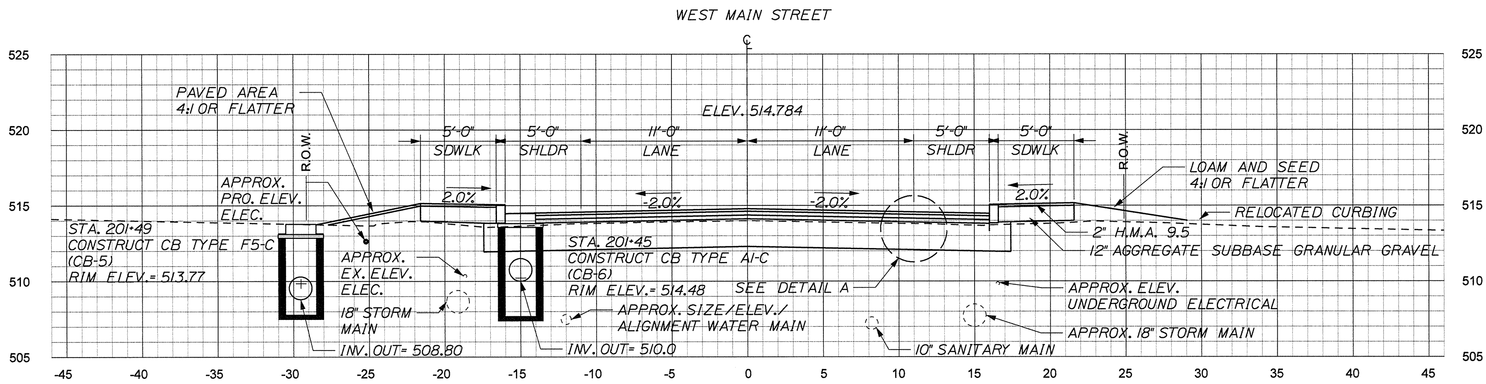

SECTION at STA. 201+45 (C / 71)
SCALE: 3/16" = 1'-0"

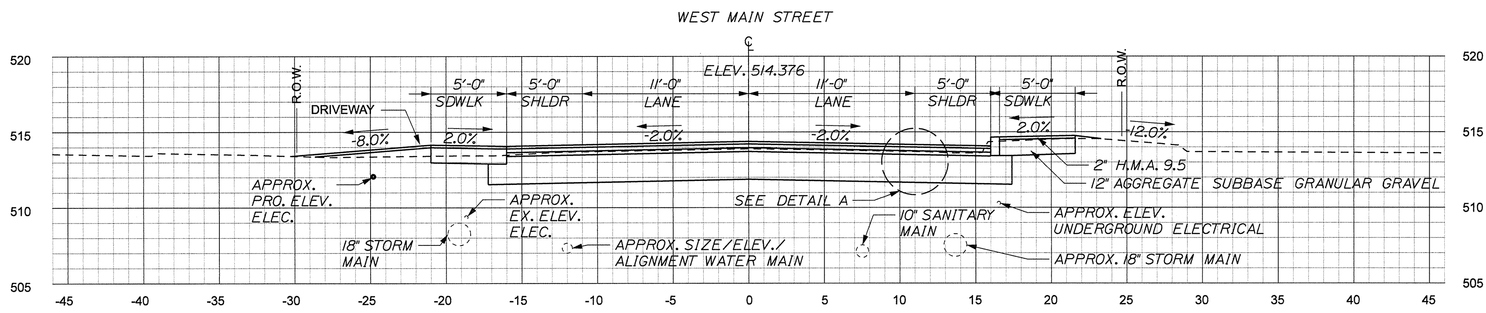

SECTION at STA. 201+25 (B / 71)
SCALE: 3/16" = 1'-0"

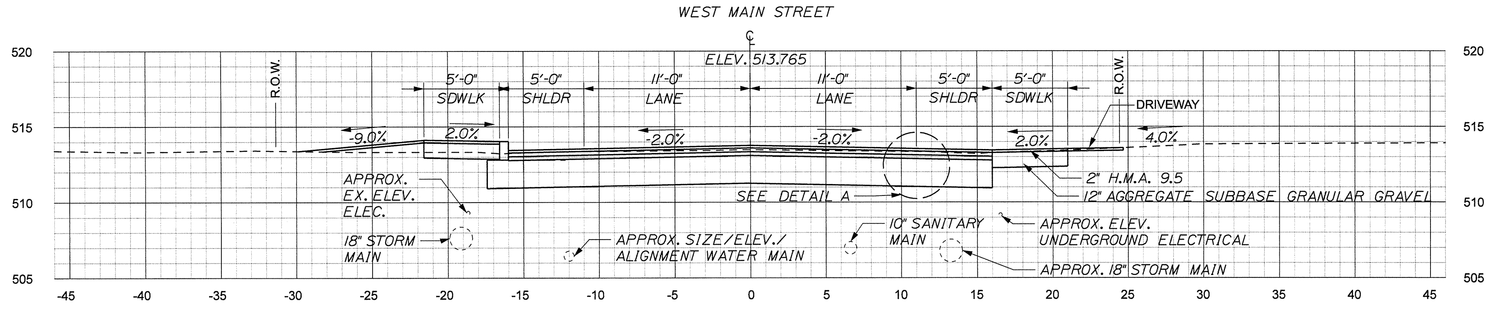

SECTION at STA. 200+75 (A / 71)
SCALE: 3/16" = 1'-0"

SHEET NUMBER 76 OF 81

INTERNATIONAL BRIDGE APPROACH
SAINT JOHN RIVER
FORT KENT AROOSTOOK

ROUTE 1 / WEST MAIN STREET
CROSS SECTIONS

PROJ. MANAGER	B.L. DORCAS	BY	DATE
DESIGN-DETAILED	BCA	DJG	12.JUN.29
CHECKED-REVIEWED	GRF	GRF	12.JUN.29
DESIGN2-DETAILED2			
DESIGN3-DETAILED3			
REVISIONS 1			
REVISIONS 2			
REVISIONS 3			
REVISIONS 4			
FIELD CHANGES			

SIGNATURE
P.E. NUMBER 13-07-19
DATE

STATE OF MAINE
BRIAN L. DORCAS
No.9463
LICENSED
PROFESSIONAL ENGINEER

STATE OF MAINE
DEPARTMENT OF TRANSPORTATION

BR-1004(210)X

BRIDGE NO. _____ PIN 10042.10 BRIDGE PLANS

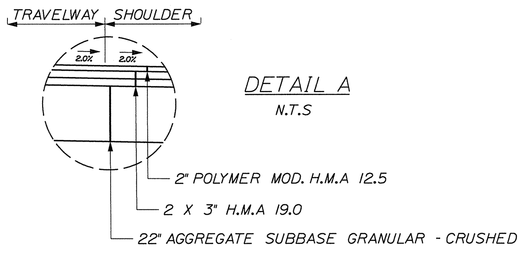

DETAIL A
N.T.S

NOTE:

1. THE PAVEMENT, BASE, SUBBASE DEPTH AS SHOWN ON PLANS ARE INTENTED TO BE NOMINAL.
2. CROWNS FOR ALL SECTIONS AND COURSES OF SUBBASE AND PAVEMENT SHALL BE STRAIGHT.
3. THE STATIONING SHOWN UNDER EACH TYPICAL SECTION IS APPROXIMATE.

WEST MAIN STREET

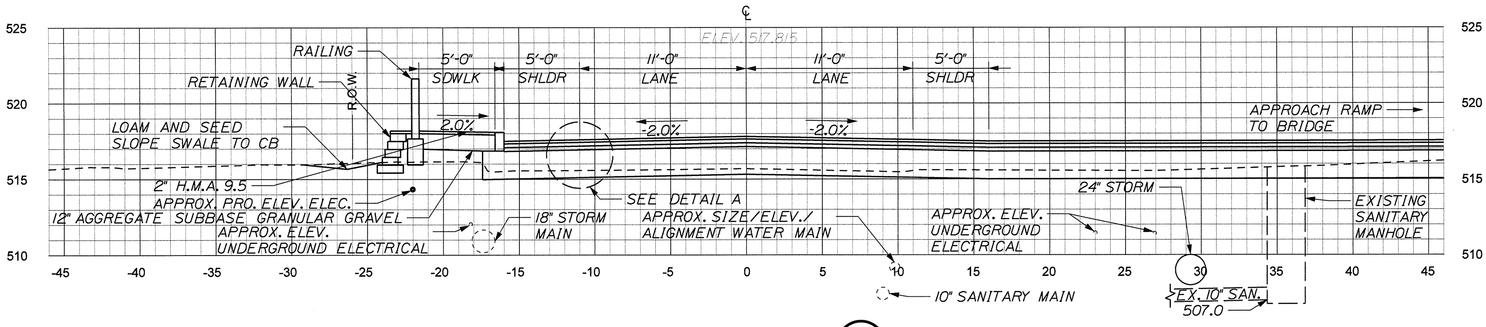

SECTION at STA. 203+50 (D / 71)
SCALE: 3/16" = 1'-0"

WEST MAIN STREET

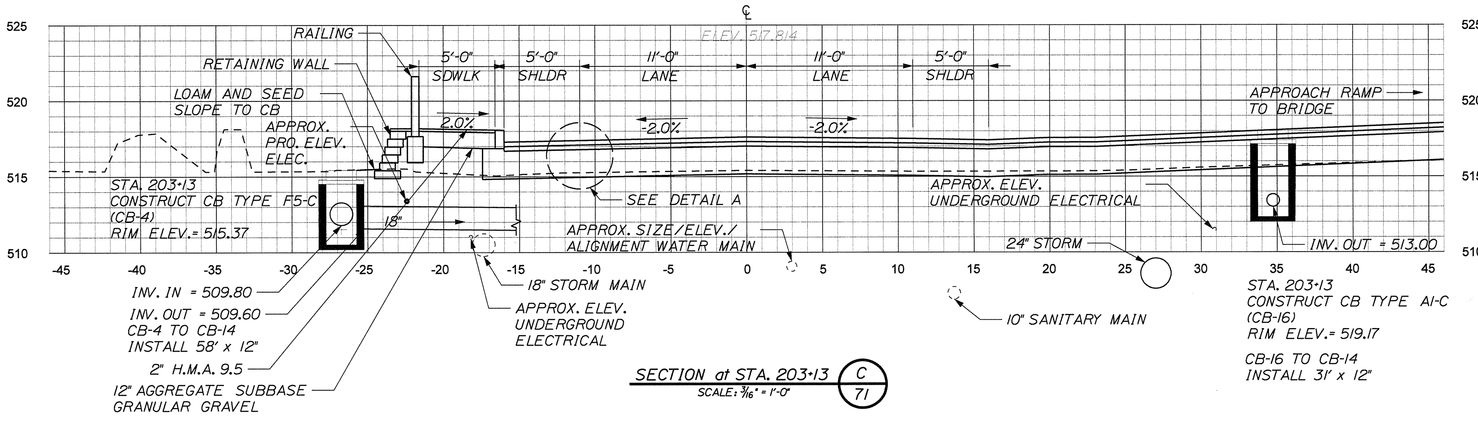

SECTION at STA. 203+13 (C / 71)
SCALE: 3/16" = 1'-0"

WEST MAIN STREET

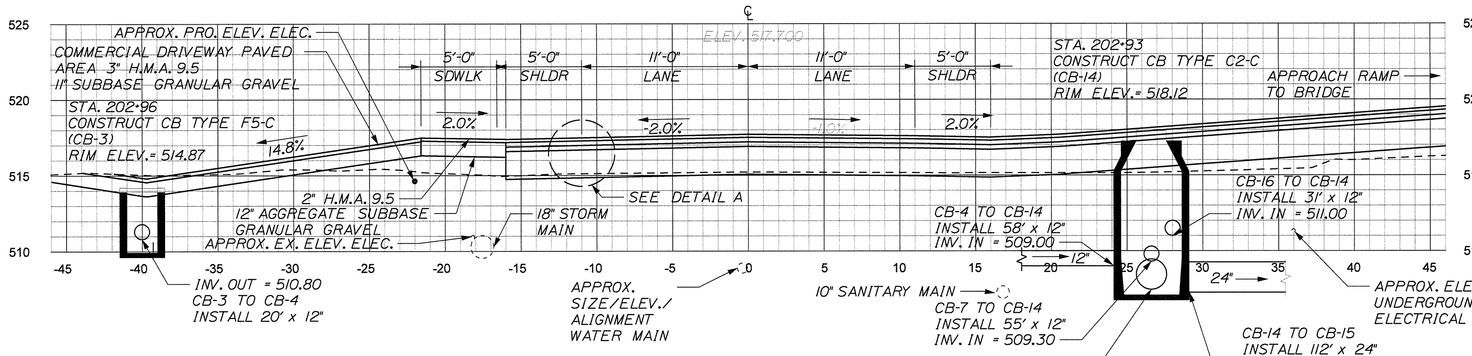

SECTION at STA. 202+93 (B / 71)
SCALE: 3/16" = 1'-0"

WEST MAIN STREET

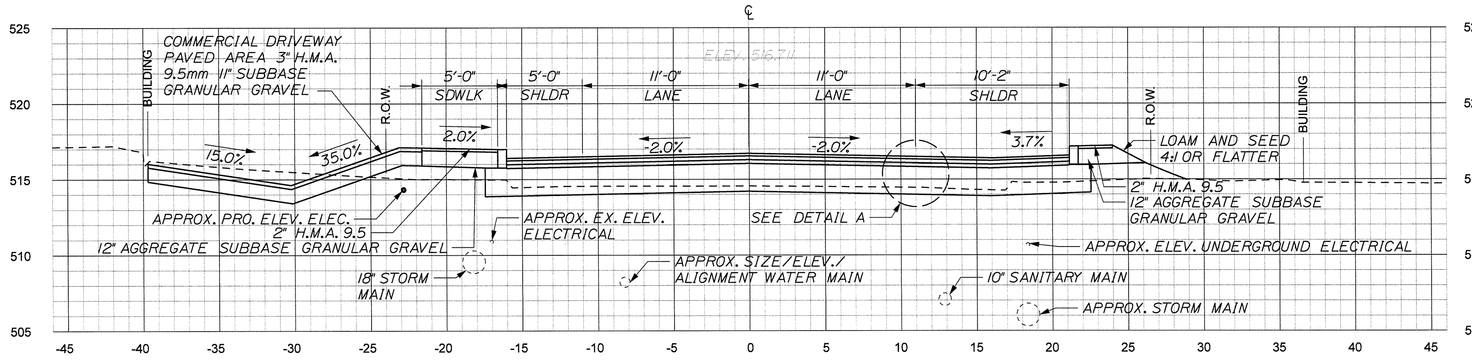

SECTION at STA. 202+25 (A / 71)
SCALE: 3/16" = 1'-0"

PROJ. MANAGER	B.L. DORCAS	BY	DATE
DESIGN-DETAILED	BCA	DJG	12.JUN.29
CHECKED-REVIEWED	GRF	GRF	12.JUN.29
DESIGN2-DETAILED2			
DESIGN3-DETAILED3			
REVISIONS 1			
REVISIONS 2			
REVISIONS 3			
REVISIONS 4			
FIELD CHANGES			

SIGNATURE
P.E. NUMBER 13-07-19
DATE

STATE OF MAINE BRIAN L. DORCAS No.9463 LICENSED PROFESSIONAL ENGINEER

SHEET NUMBER 77 OF 81

INTERNATIONAL BRIDGE APPROACH
SAINT JOHN RIVER
FORT KENT AROOSTOOK

ROUTE 1 / WEST MAIN STREET CROSS SECTIONS

STATE OF MAINE
DEPARTMENT OF TRANSPORTATION

BR-1004(210)X

BRIDGE NO. _____ PIN 10042.10 BRIDGE PLANS

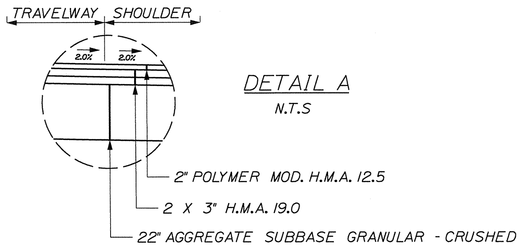

DETAIL A
N.T.S

NOTE:

1. THE PAVEMENT. BASE. SUBBASE DEPTH AS SHOWN ON PLANS ARE INTENTED TO BE NOMINAL.
2. CROWNS FOR ALL SECTIONS AND COURSES OF SUBBASE AND PAVEMENT SHALL BE STRAIGHT.
3. THE STATIONING SHOWN UNDER EACH TYPICAL SECTION IS APPROXIMATE.

WEST MAIN STREET

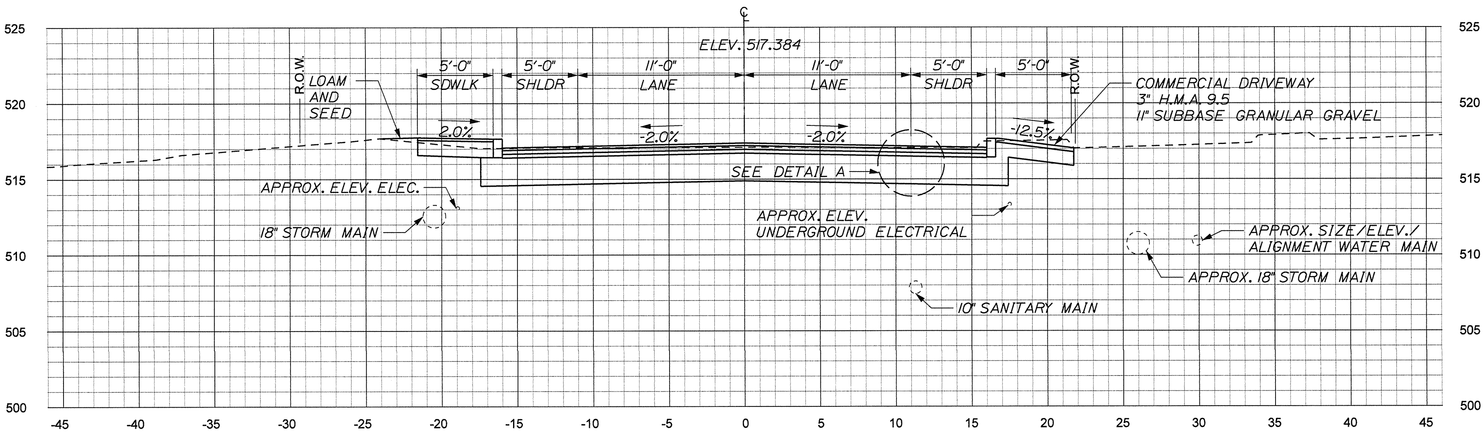

SECTION at STA. 204+75 D/71
SCALE: 3/16" = 1'-0"

WEST MAIN STREET

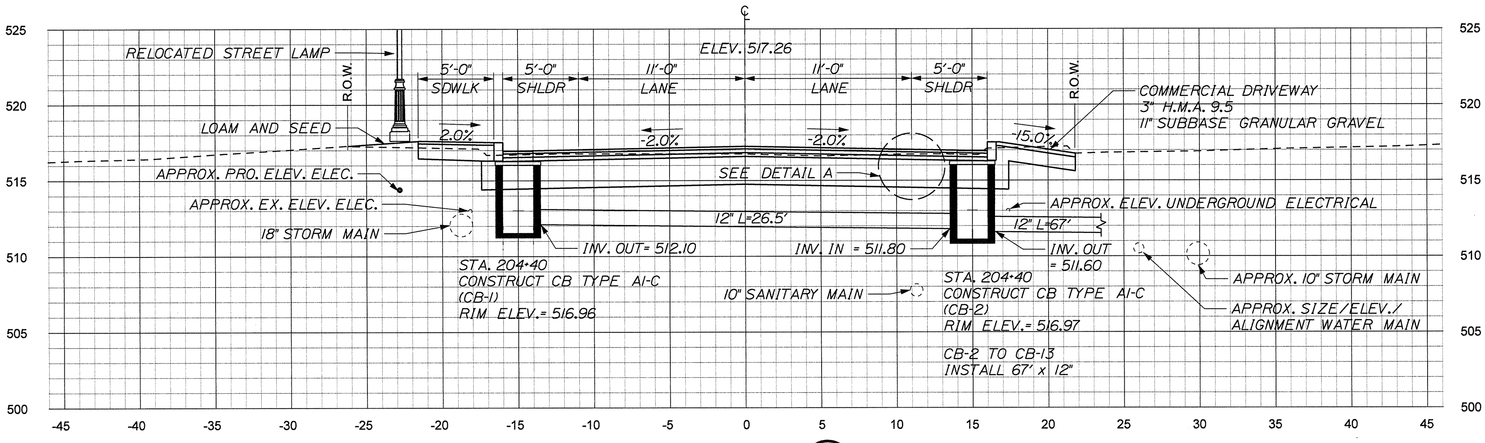

SECTION at STA. 204+40 C/71
SCALE: 3/16" = 1'-0"

WEST MAIN STREET

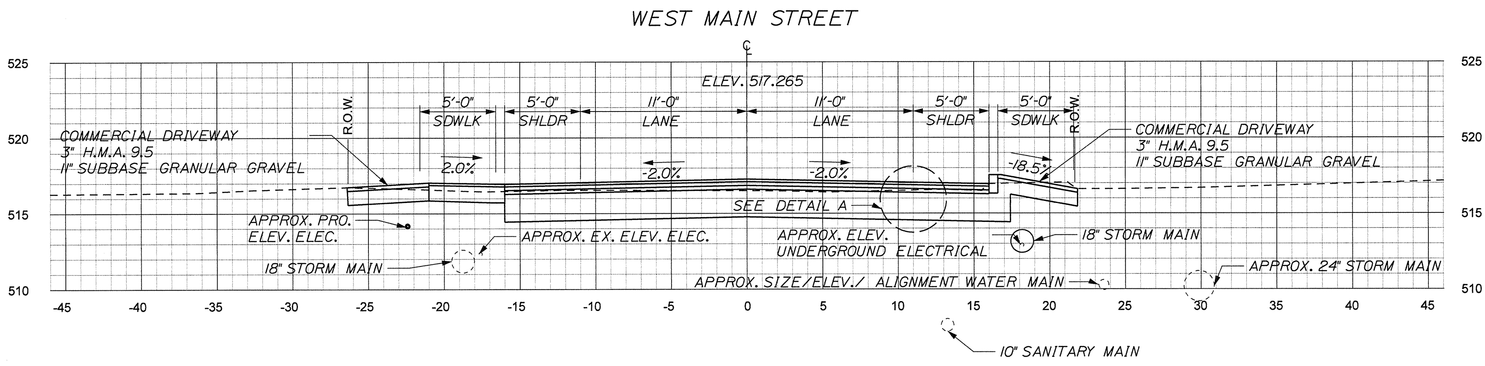

SECTION at STA. 204+25 B/71
SCALE: 3/16" = 1'-0"

WEST MAIN STREET

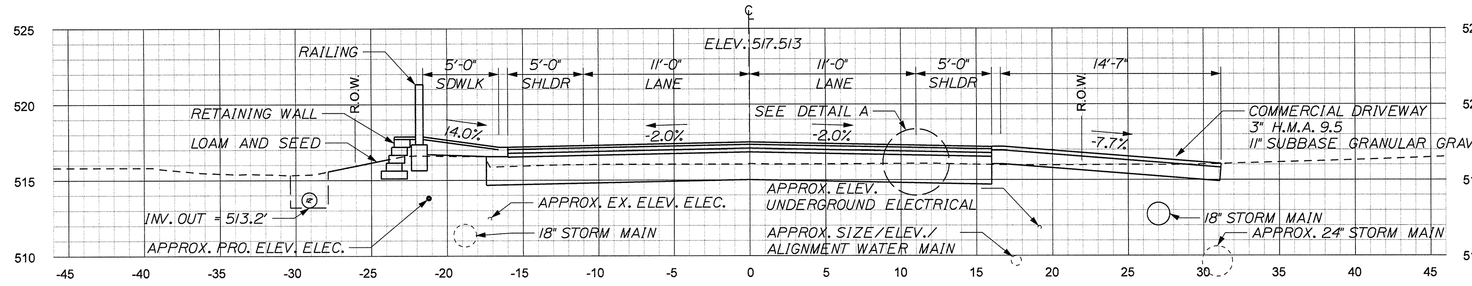

SECTION at STA. 203+90 A/71
SCALE: 3/16" = 1'-0"

PROJ. MANAGER	B.L. DORCAS	BY	DATE
DESIGN-DETAILED	BCA	DJG	12.JUN.29
CHECKED-REVIEWED	GRF	GRF	12.JUN.29
DESIGN2-DETAILED2			
DESIGN3-DETAILED3			
REVISIONS 1			
REVISIONS 2			
REVISIONS 3			
REVISIONS 4			
FIELD CHANGES			

SIGNATURE
P.E. NUMBER 13-07-19
DATE

STATE OF MAINE BRIAN L. DORCAS No.9463 LICENSED PROFESSIONAL ENGINEER

INTERNATIONAL BRIDGE APPROACH
SAINT JOHN RIVER
FORT KENT AROOSTOOK

ROUTE 1 / WEST MAIN STREET
CROSS SECTIONS

STATE OF MAINE
DEPARTMENT OF TRANSPORTATION

BR-1004(210)X

BRIDGE NO. _____ PIN 10042.10 BRIDGE PLANS

SHEET NUMBER 78 OF 81

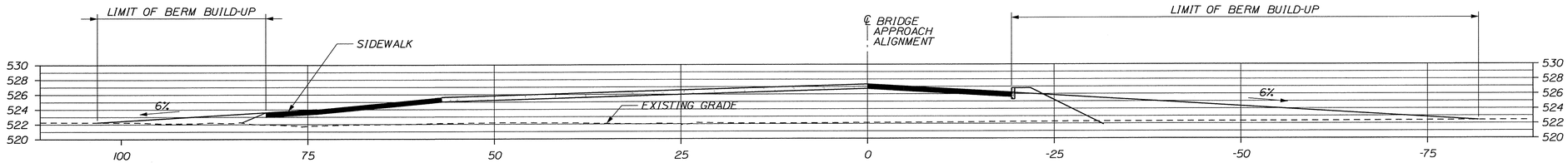

SECTION A / 71

SCALE: 1/8" = 1'-0"

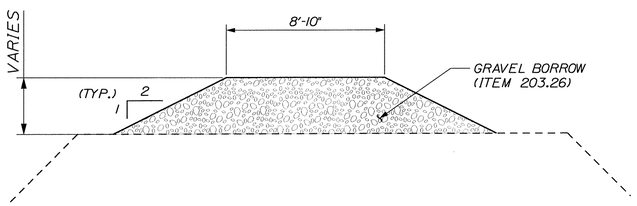

TYPICAL BERM BUILD-UP SECTION

SCALE: 1/4" = 1'-0"

STATE OF MAINE
DEPARTMENT OF TRANSPORTATION

BR-1004(210)X

PIN 10042.10

BRIDGE PLANS

BRIDGE NO. ____

STATE OF MAINE · BRIAN L. DORCAS · No. 9469 · LICENSED · PROFESSIONAL ENGINEER

PROJ. MANAGER	B.L. DORCAS	BY	DATE
DESIGN-DETAILED	NWR	NWR	12.JUN.29
CHECKED-REVIEWED		RWS2	12.JUN.29
DESIGN2-DETAILED2			
DESIGN3-DETAILED3			
REVISIONS 1			
REVISIONS 2			
REVISIONS 3			
REVISIONS 4			
FIELD CHANGES			

P.E. NUMBER / SIGNATURE

12-06-29
DATE

INTERNATIONAL BRIDGE APPROACH
SAINT JOHN RIVER
FORT KENT AROOSTOOK

BERM BUILD-UP PROFILE

SHEET NUMBER
79
OF 81

Filename: $file$ Division: $wkgroup$ Username: $user$ Date:$date$

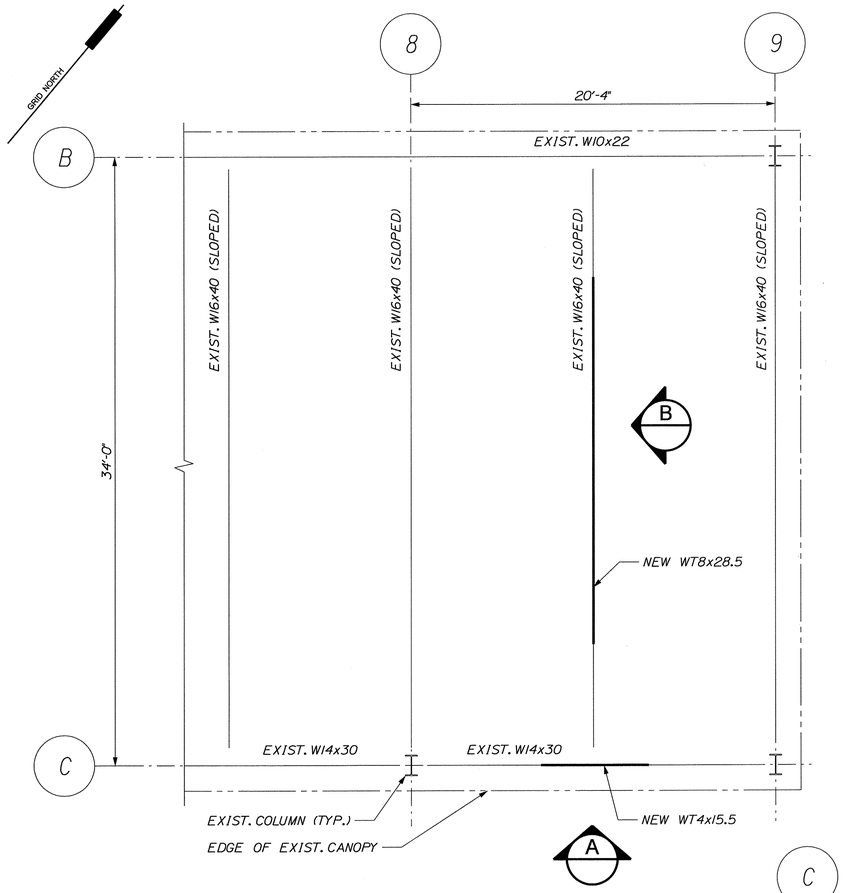

EXISTING CANOPY ROOF FRAMING PLAN
SCALE: 1/4" = 1'-0"

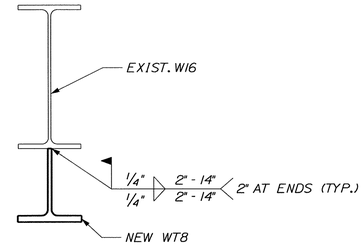

SECTION 'C'
SCALE: 1 1/2" = 1'-0"

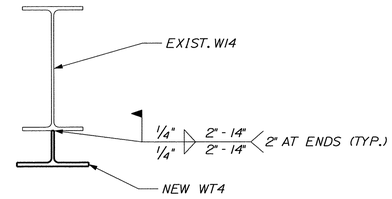

SECTION 'D'
SCALE: 1 1/2" = 1'-0"

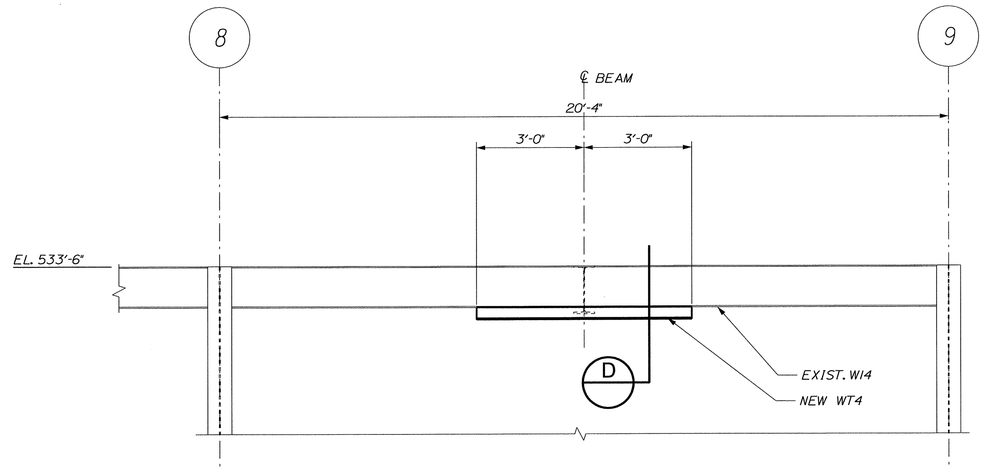

ELEVATION 'A'
SCALE: 1/4" = 1'-0"

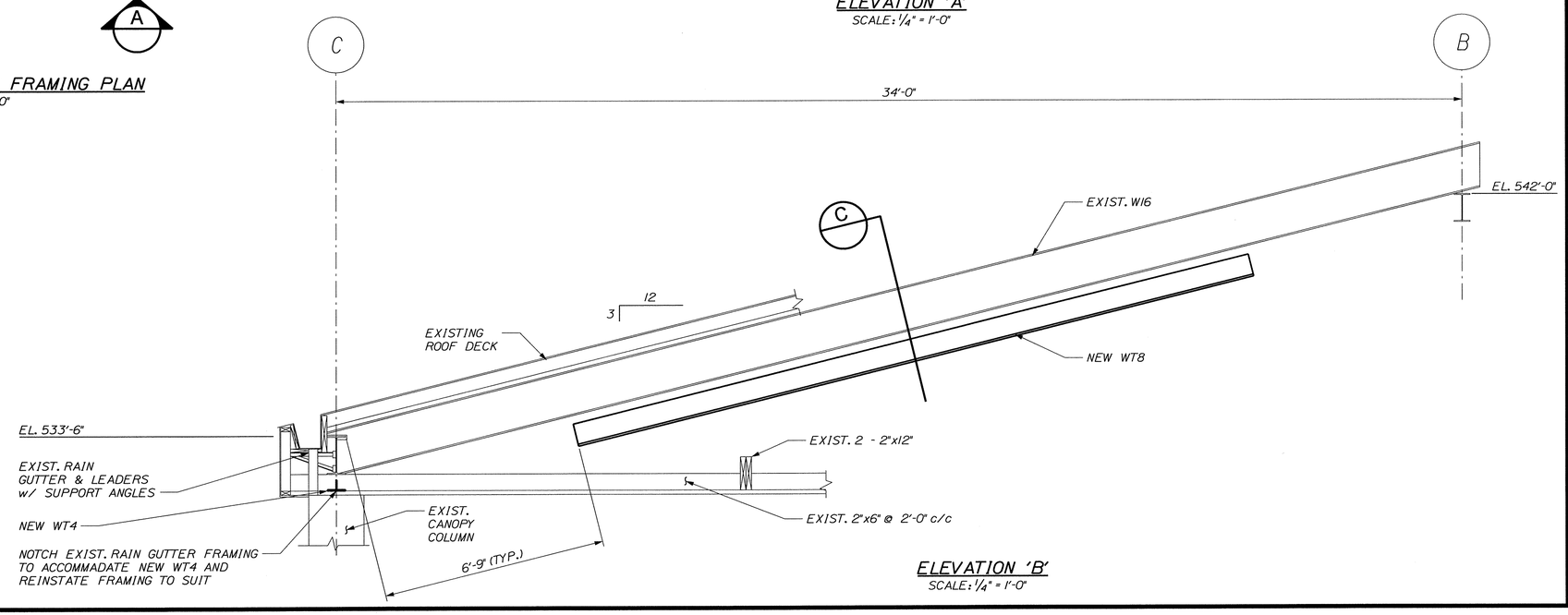

ELEVATION 'B'
SCALE: 1/4" = 1'-0"

STATE OF MAINE
DEPARTMENT OF TRANSPORTATION

BR-1004(210)X

PIN 10042.10

BRIDGE PLANS

BRIDGE NO. ____

STATE OF MAINE
BRIAN L. DORCAS
No.9463
LICENSED
PROFESSIONAL ENGINEER

		BY	DATE
PROJ. MANAGER	B.L. DORCAS		
DESIGN-DETAILED		AEG	12.JUN.29
CHECKED-REVIEWED	CMB	RWS2	12.JUN.29
DESIGN2-DETAILED2			
DESIGN3-DETAILED3			
REVISIONS 1			
REVISIONS 2			
REVISIONS 3			
REVISIONS 4			
FIELD CHANGES			

SIGNATURE

P.E. NUMBER

12-26-29
DATE

INTERNATIONAL BRIDGE APPROACH
SAINT JOHN RIVER
FORT KENT AROOSTOOK

EXISTING CANOPY
STEEL REINFORCEMENT

SHEET NUMBER
80
OF 81

Date:$date$
Division: $wkgroup$
Filename: $file$
Username: $user$

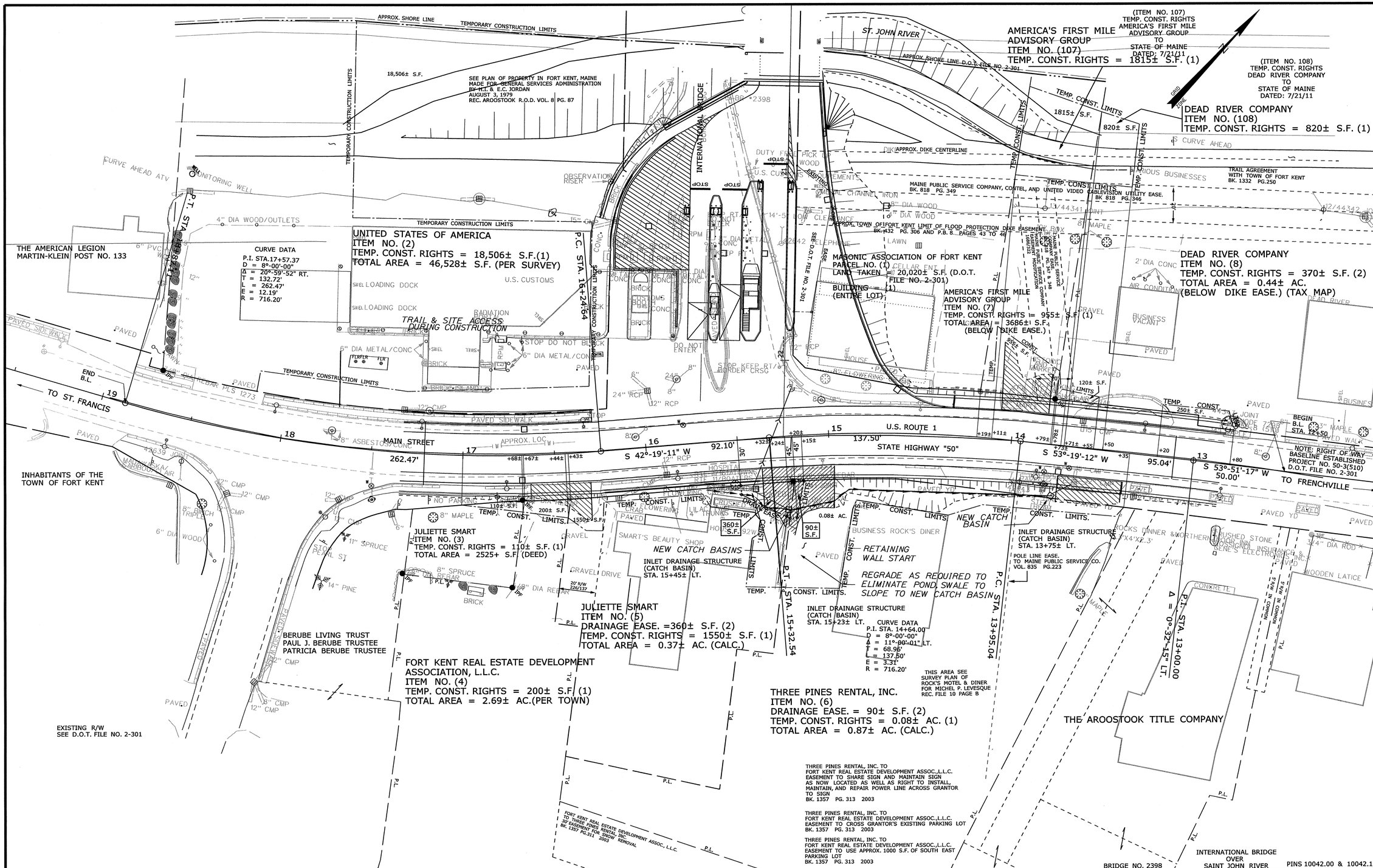

SYMBOLS

- (WELL) WELL
- GRADING LIMIT LINE
- CONSTRUCTION LIMIT LINE
- PROPERTY LINE PL
- LIMITS OF VIROUGHT PORTION (L.O.V.P.)
- EXISTING RIGHT OF WAY
- NEW RIGHT OF WAY
- NEW ROW WITHIN EXIST. ROW
- CONTROL OF ACCESS
- ● I.P. or ●I.P.F. (IRON PIPE or PIN FOUND)
- S.T. (SEPTIC TANK)
- (TOP OF WALL POINT)
- (TRAVERSE POINT)
- WATER LINE W
- GAS LINE G
- ELECTRIC LINE E
- TELEPHONE LINE T
- SEWER LINE S

ITEM	TECH	CHECKED
BASE MAP		
EXIST. R/W		
PROP. LINES		
AREAS		

STATE OF MAINE
DEPARTMENT OF TRANSPORTATION
16 STATE HOUSE STATION - AUGUSTA, ME 04333-0016

FORT KENT
RIGHT OF WAY MAP

REVISIONS

NO.	DATE	DESCRIPTION	BY
1.	6/13/2011	ADDED ITEM NO. 107 AND ITEM NO. 108	D.S.G.

PLAN FILED IN PLAN BOOK PAGE COUNTY RECORD

NO.	GRANTOR	INSTRUMENT	DATE	BOOK	PAGE
1	MASONIC ASSOCIATION OF FT. KENT	COND.	10/12/10	1698	105
		COND.	6/20/11	1724	1

DAVID BERNHARDT
COMMISSIONER
KENNETH L. SWEENEY
CHIEF ENGINEER
DATE

STATE HIGHWAY "50"
U.S. ROUTE 1 / MAIN ST.
FORT KENT AROOSTOOK COUNTY
FEDERAL AID PROJECT NOS. BR-1004(200)X BR-1004(210)X

AUGUST 2010
APRIL 2011
SCALE 1" = 25'
RIGHT-OF-WAY MAP
SHEET 1 OF 1
D.O.T. FILE NO. 2-531

SHEET NUMBER
81
OF 81

Filename: ...\00\ROW\MSTA\001_RWPLAN1.dgn Division: ROW Username: diana.grady Date:6/20/2012