STATE OF MAINE
DEPARTMENT OF TRANSPORTATION

SPECIFICATIONS

Design: Load and Resistance Factor Design Per AASHTO LRFD Bridge Design Specifications, Fifth Edition, 2010 with 2010 Interim Specifications.

DESIGN LIVE LOAD

Live Load HL-93

TRAFFIC DATA

Current (2010) AADT	2450
Future (2030) AADT	3920
DHV - % of AADT	12%
Design Hour Volume	470
% Heavy Trucks (AADT)	5%
% Heavy Trucks (DHV)	5%
Directional Distribution (DHV)	57%
18 kip Equivalent P 2.0	51
18 kip Equivalent P 2.5	48
Design Speed (mph)	25
Road Classification	Local Road

HYDROLOGIC DATA

Mean Lower Low Water (MLLW)	-4.96 ft
Mean Low Water (MLW)	-4.63 ft
Mean Tide Level (MTL)	-0.31 ft
Mean High Water (MHW)	4.00 ft
Mean Higher High Water (MHHW)	4.43 ft
2011 Predicted High Tide	6.34 ft
Q10 Elevation	7.74 ft
Q50 Elevation	8.54 ft
Q100 Elevation	8.84 ft

1. *Flood elevations are based on values from the FEMA Flood Insurance Study, Town of York, Maine, Revised June 17, 2002 converted to NAVD 88 by subtracting 0.76 feet from NGVD 29 datum values.*

2. *Mean elevations are based on NOAA National Ocean Service Tidal Reference Station #8423898 located at Fort Point, Newcastle Island, New Hampshire. Elevations from the National Tidal Datum EPOCH (NTDE) of 1983 to 2001 have been adjusted to the project vertical datum of NAVD 88.*

MATERIALS

Concrete	Class "A", Class "LP" and Class "Latex"
Reinforcing Steel	ASTM A 615/A 615M, Grade 60
Structural Steel:	
All Materials (Except as Noted)	ASTM A 709, Grade 50
High Strength Bolts (Except as Noted)	ASTM A 325, Type 1
Lumber & Timber	Treated Southern Pine - Structural Grade No. 1
Steel Pipe Piles	ASTM A252, Grade 3 (Uncoated)
Composite Substructure Forms	(See Special Provisions)
Glulam Stringers	Treated Southern Pine, Type 24F-V3
Glulam Deck Panel	Treated Southern Pine, Type 47

BASIC DESIGN STRESSES

Steel Pipe Piles	Fy = 45, 000 psi
Concrete Class "A" and "Latex"	f'c = 4,350 psi
Concrete Class "LP"	f'c = 5,075 psi
Reinforcing Steel	fy = 60,000 psi
Structural Steel (Stringers):	
ASTM A 709, Grade 50 (galvanized and coated)	Fy = 50, 000 psi
ASTM A 325	Fu = 120, 000 psi

Glulam Stringers (Unadjusted)
Fbxo = 2,400 psi; Fvxo = 300 psi; Fcpxo = 740 psi; Exo = 1,800,000 psi

Glulam Deck panels (Unadjusted)
Fbxo = 1,400 psi; Fvxo = 300 psi; Fcpxo = 650 psi; Exo = 1,400,000 psi

Structural Timber
Fbo = 1,350 psi; Fvo = 165 psi; Fcpo = 375 psi; Eo = 1,500,000 psi

YORK
YORK COUNTY
SEWALL'S BRIDGE
OVER
YORK RIVER
ORGANUG ROAD
FEDERAL AID PROJECT NO. BR-1266(500)X
BRIDGE NO. 3096

UTILITIES

Fairpoint Communications
Central Maine Power
Time Warner Cable
York Water District

MAINTENANCE OF TRAFFIC

Bridge to be closed to traffic during construction.

INDEX OF SHEETS

Title Sheet 1
Quantities and Notes 2
General Plan 3
Detour Signing Plan 4
Profile 5
Typical Roadway Sections 6
Cross Sections (1 of 6) 7
Cross Sections (2 of 6) 8
Cross Sections (3 of 6) 9
Cross Sections (4 of 6) 10
Cross Sections (5 of 6) 11
Cross Sections (6 of 6) 12
Boring Location Plan 13
Interpretive Subsurface Profile 14
Borings Logs (1 of 9) 15
Borings Logs (2 of 9) 16
Borings Logs (3 of 9) 17
Borings Logs (4 of 9) 18
Borings Logs (5 of 9) 19
Borings Logs (6 of 9) 20
Borings Logs (7 of 9) 21
Borings Logs (8 of 9) 22
Borings Logs (9 of 9) 23
Masonry Wall Details 24
Abutment No. 1 Details 25
Abutment No. 2 Details 26
Abutment No. 2 Bent Details 27
Pier Bent Details 28
Pile Details (1 of 2) 29
Pile Details (2 of 2) 30
Framing Plan and Elevation (1 of 2) 31
Framing Plan and Elevation (2 of 2) 32
Bridge Typical Sections 33
Timber Stringer Details 34
Steel Stringer Details (1 of 2) 35
Steel Stringer Details (2 of 2) 36
Deck Details (1 of 2) 37
Deck Details (2 of 2) 38
Bridge Rail Details (1 of 2) 39
Bridge Rail Details (2 of 2) 40
South Approach Rail 41
North Approach Rail 42
Approach Rail Details 43
Timber Guardrail Details (1 of 2) 44
Timber Guardrail Details (2 of 2) 45
Utility Details (1 of 3) 46
Utility Details (2 of 3) 47
Utility Details (3 of 3) 48
Right of Way Map 49
Right of Way Map 50

VHB Vanasse Hangen Brustlin, Inc.

PROJECT LOCATION:	1.00 mile northerly of Route 103
PROGRAM AREA:	Bridge
OUTLINE OF WORK:	Bridge Rehabilitation

WIN 12665.00

STATE OF MAINE
DEPARTMENT OF TRANSPORTATION
APPROVED
COMMISSIONER: DATE 2/2/12
CHIEF ENGINEER: 2/1/12

STATE OF MAINE Steven Hendrickson 11206 LICENSED PROFESSIONAL ENGINEER

PROJECT INFORMATION		
PROGRAM	BRIDGE	
PROJECT MANAGER	N. BENOIT	SIGNATURE
DESIGNER	VHB	11206
CONSULTANT	VHB	P.E. NUMBER
PROJECT RESIDENT		12/16/2011
CONTRACTOR		DATE
PROJECT COMPLETION DATE		

YORK
SEWALL'S BRIDGE

TITLE SHEET

SHEET NUMBER
1
OF 50

Filename: ...\st\planset\001_Title_01.dgn Division: Structures Username: kwentworth Date:12/23/2011

ESTIMATED QUANTITIES			
ITEM NO.	DESCRIPTION	QUANTITY	UNIT
202.19	Removing Existing Bridge (170 CY)	1	LS
202.202	Removing Pavement Surface	930	SY
203.20	Common Excavation	340	CY
203.25	Granular Borrow	115	CY
206.082	Structural Earth Excavation - Major Structures	225	CY
304.10	Aggregate Subbase Course - Gravel	340	CY
403.210	Hot Mix Asphalt 9.5 mm	235	TON
403.2101	9.5 mm Polymer Mod. Hot Mix Asphalt	113	TON
409.15	Bituminous Tack Coat - Applied	74	GAL
429.34	Grid/Fabric Composite Pavement Interlayer	5720	SF
501.231	Dynamic Loading Test	4	EA
501.36	Steel H-beam Piles 36 lbs/ft. Delivered	826	LF
501.361	Steel H-beam Piles 36 lbs/ft. in Place	826	LF
501.70	Steel Pipe Piles. Delivered	3528	LF
501.701	Steel Pipe Piles. in Place	3528	LF
501.90	Pile Tips	62	EA
501.91	Pile Splices	66	EA
501.92	Pile Driving Equipment Mobilization	1	LS
502.219	Structural Concrete Abutments and Retaining Walls (4 CY)	1	LS
504.70	Structural Steel Fabricated and Delivered (21000 LB)	1	LS
504.701	Structural Steel Fabricated and Delivered. Rolled (31000 LB)	1	LS
504.71	Structural Steel Erection (31000 LB)	1	LS
506.9101	Galvanizing (and Top Coating)	1	LS
509.90	Fiberglass Composite. Concrete Filled	1700	LF
509.901	Fiberglass Composite. Concrete Filled (Reinforced)	900	LF
515.21	Protective Coating for Concrete Surface (7 SY)	1	LS
520.232	Expansion Device - Asphaltic Plug Joint	44	LF
526.301	Temporary Concrete Barrier Type I (60 LF)	1	LS
528.08	Structural Timber (6370 BF)	1	LS
528.08	Structural Timber - Repair (500 BF)	1	LS
528.91	Glulam Timber Bridge Rail	505	LF
528.9103	Glulam Pier Caps (820 BF)	1	LS
528.9105	Glulam Deck Panel (31240 BF)	1	LS
528.9106	Glulam Timber Stringers (24840 BF)	1	LS
606.363	Guardrail Remove and Dispose	325	LF
606.61	Steel-Backed Timber Guardrail	315	LF
606.6121	Steel-Backed Timber Guardrail Terminal Type SBT-FAT	2	EA
607.292	Remove and Rebuild Stone Wall	120	LF
610.08	Plain Riprap	210	CY
620.58	Erosion Control Geotextile	275	SY
627.18	12 in Solid White Pavement Marking Line	19	LF
627.733	4 Inch White or Yellow Painted Pave MRK Line	650	LF
629.05	Hand Labor. Straight Time	30	HR
631.12	All-Purpose Excavator (including operator)	30	HR
631.171	Truck - small (including operator)	30	HR
639.18	Field Office Type A	1	EA
645.106	Demount Regulatory. Warning. Confirmation and Route Marker Sign	6	EA
645.116	Reinstall Regulatory. Warning. Confirmation and Route Marker Sign	5	EA
652.312	Type III Barricade	4	EA
652.33	Drum	50	EA
652.34	Cone	50	EA
652.35	Construction Signs	300	SF
652.361	Maintenance of Traffic Control Devices (480 Days)	1	LS
652.38	Flagger	150	HR
656.75	Temporary Soil Erosion and Water Pollution Control	1	LS
659.10	Mobilization	1	LS

ESTIMATED QUANTITIES			
ITEM NO.	DESCRIPTION	QUANTITY	UNIT
	Items Specific to Option No. 1 (Utility Conduit System)		
626.27	4 Inch Diameter Utility Conduit System	1	LS

GENERAL CONSTRUCTION NOTES

1. During construction. the road will be closed to traffic for a time period specified in the Special Provisions.

2. For easements. construction limits and right of way lines. refer to Right of Way Map.

3. All utility facilities shall be adjusted by the respective utilities unless otherwise noted.

4. Protective Coating for Concrete Surfaces shall be applied to the following areas:

Top of abutment no. 1 backwall and to one foot below the top of the backwall on the back side.

5. Bidders and Contractors may obtain a copy of the existing bridge plans by faxing a Request for Information to the Bid Contact Person. The plans are reproductions of the original drawings as prepared for the construction of the bridge. It is very unlikely that the plans will show any construction field changes or any alterations which may have been made to the bridge during its life span.

6. Bidders and Contractors may obtain a copy of the project geotechnical report(s): Geotechnical Design Report Dated December 2011. by faxing a Request for Information to the Bid Contact Person.

7. Geotechnical information furnished or referred to in this plan set is for the use of the Bidders and the Contractor. No assurance is given that the information or interpretations will be representative of actual subsurface conditions at the construction site. MaineDOT will not be responsible for the Bidders' or Contractor's interpretations of. or conclusions drawn from. the geotechnical information. The boring logs contained in the plan set present factual and interpretive subsurface information collected at discrete locations. Data provided may not be representative of the subsurface conditions between the boring locations.

8. Quantities included for pay items measured and paid for by Lump Sum are estimated quantities and are provided by MaineDOT for informational purposes only. Lump Sum pay items will be paid for at the Contract Bid amount. with no addition or reduction in payment to the Contractor if the actual final quantities are different from the MaineDOT provided estimated quantities. except as follows:

a. If a Lump Sum pay item is eliminated. the requirements of Standard Specifications Section 109.2. Elimination of Items. will take precedence.

b. If other Contract Documents specifically allow a change in payment for a Lump Sum pay item. those requirements will be followed.

c. If a design change results in changes to estimated quantities for Lump Sum pay items. price adjustments will be made in accordance with Standard Specifications Section 109.7. Equitable Adjustments to Compensation.

9. All costs for cofferdams. including pumping. maintenance. related temporary soil erosion and water pollution controls and removal. will not be paid for directly. but will be considered incidental to related Contract items.

10. The existing bridge shall be removed by and become the property of the Contractor. The steel portions of the existing bridge are coated with a lead-based paint system. The Contractor is responsible for the containment. proper management and disposal of all lead-contaminated hazardous waste generated by the process of demolishing the bridge. The Contractor is responsible for implementing appropriate OSHA mandated personal protection standards related to this process. Once the existing bridge is removed. the Contractor is solely responsible for the care. custody and control of the components of the existing bridge and any hazardous waste generated as a result of the storage. recycling or disposal of the bridge components. including lead-coated steel. The Contractor shall recycle or reuse the steel in accordance with the Maine Department of Environmental Protection's "Maine Hazardous Waste Management Regulations." Chapter 850. A copy of this regulation is available at MaineDOT's offices on Child Street in Augusta. Payment for all labor. materials. equipment and other costs required to remove and dispose of the existing bridge will be considered incidental to the bridge removal pay item.

11. Unless otherwise noted. dimensions. angles. and elevations of the existing bridge shown on these plans have been obtained from plans of the existing structure and limited field investigations and may not accurately reflect actual field conditions. Accordingly. the Contractor will be responsible for making field measurements of all existing structure components impacted by the work to assure consistency with the proposed modifications. Any discrepancies in the dimensions. character or extent of existing features shall be brought to the attention of the Engineer before advancing the work. Shop drawings required for various items of the work shall indicate the actual field measurements and shall be so noted.

12. The riprap in front of abutment no. 1 shall be placed before the new beams are erected.

13. The Contractor shall take all precautions necessary to prevent siltation. or pollution. and discharge of concrete into the river.

PIER DESIGN CRITERIA

1. Critical AASHTO Load Combination - Strength 1.

2. Stream flow: Velocity of 4.2 fps skewed at 5° to longitudinal centerline of pier.

3. Wind: 100 mph or 0.05 ksf.

4. Scour: 10 feet total scour estimated.

TIMBER AND GLULAM STRINGER NOTES

1. Glulam design stresses provided are unadjusted by LRFD adjustment factors

2. Glulam stringers shall be cambered a minimum of 1/4". Place stringers with camber up.

3. The glulam stringers shall be preservative treated in accordance to AASHTO M133. Post treatment cleaning of the stringers to minimize the amount of free preservative at the surface is required.

4. All costs for the glulam stringers. including connection hardware and shim plates shall be included in item 528.9106.

5. Documentation shall be provided by the supplier to verify retention levels of treatment. stress ratings of wood. and steam cleaning.

6. Where existing stringers are cut-to-fit in their new location. field apply preservative treatment in accordance with AASHTO M133.

BRIDGE REMOVAL NOTES

1. Existing bridge removal includes. but is not limited to. bridge pavement. deck timbers. railings. rail posts. curbs. timber stringers (except those that are in the best condition to be salvaged and incorporated into the rehabilitated bridge as determined by the Resident). steel stringers. diaphragms. piers. abutment no. 1 backwall. abutment no. 1 timber sill plate. abutment no. 2 bent. and abutment no. 2 timber wearing plate.

2. Existing waterline shall be removed and salvaged to the York Water District as directed by the resident. Cost included in item 202.19

3. The existing bridge contains timber treated with creosote. ZMA salt. CCA. and other preservative treatments. The Contractor is responsible for the proper containment. handling. management. and disposal of all wood products in accordance with all local. state. and federal regulations.

4. Existing timber piles at piers and abutment bent no. 2 shall be extracted to prevent interference with new piles.

5. The Contractor shall take special care not to damage any portions of the existing bridge that are retained during the rehabilitation project.

6. Existing members and hardware that are salvaged and incorporated into the rehabilitated bridge shall be carefully handled and stored similar to new elements as described in Special Provision Section 528. Structural Timber.

STRUCTURAL TIMBER NOTES

1. All costs for solid sawn timber pier caps. abut. no. 1 sill cap. abut. no. 2 wearing plate. abut. no. 2 compression blocks. abut. no. 2 timber beveled washers and timber stringer bridging including connection hardware shall be included in item 528.08 structural timber.

2. All costs for glulam timber pier caps including connection hardware shall be included in item 528.9103 glulam pier caps.

SUBSTRUCTURE NOTES

1. Substructure connection hardware including plates. bolts. nuts. and washers shall be Stainless Steel Type 316 unless noted otherwise. Washers shall be installed with all nuts and also with bolt heads if the head is used as the turned element during tightening.

2. All bolted connections of the fiberglass substructure members shall be one of the following options: 1) Prefabricated oversized holes in fiberglass shells. with matching PVC sleeve inserts. 2) Field drilled oversized holes into the concrete filled fiberglass members. or 3) Contractor may submit an alternative connection method to the Engineer for approval. All costs for connection plates. bolts. sleeves. field drilling and any other material/operation required shall be incidental to Item No. 504.70 Structural Steel Fabricated and Delivered.

3. All costs for the reinforced and un-reinforced concrete fill in the fiberglass members shall be included in items 509.901 and 509.90 respectively.

4. Payment for drilling and grouting. and reinforcing steel in Abutment No. 1 shall be incidental to Item 502.219 Structural Concrete Abutments and Retaining Walls.

5. Steel pipe pile quantities include additional length (up to 2' above MHW) for construction purposes. See plans for final cut-off elevations.

6. All substructure concrete shall include Calcium Nitrate at the rate of 3 gallons per cubic yard.

STATE OF MAINE
DEPARTMENT OF TRANSPORTATION

BR-1266(500)X

WIN 12665.00

BRIDGE NO. 3096

BRIDGE PLANS

STATE OF MAINE · Steven M. Hodgdon · 11206 · LICENSED PROFESSIONAL ENGINEER

PROJ. MANAGER	N. BENOIT	BY	DATE
DESIGN-DETAILED	LSG	KDW	2\12
CHECKED-REVIEWED	SMH	LSG	2\12
DESIGN2-DETAILED2	LSG	CLC	2\12
DESIGN3-DETAILED3	---	---	---
REVISIONS 1	---	---	---
REVISIONS 2	---	---	---
REVISIONS 3	---	---	---
REVISIONS 4	---	---	---
FIELD CHANGES	---	---	---

SIGNATURE

11206

P.E. NUMBER

2/15/2012

DATE

SEWALL'S BRIDGE
YORK RIVER
YORK COUNTY
YORK

QUANTITIES AND NOTES

SHEET NUMBER

2

OF 50

Filename: ...\st\planset\002_Notes_01.dgn Division: Structures Username: kwentworth Date:2/15/2012

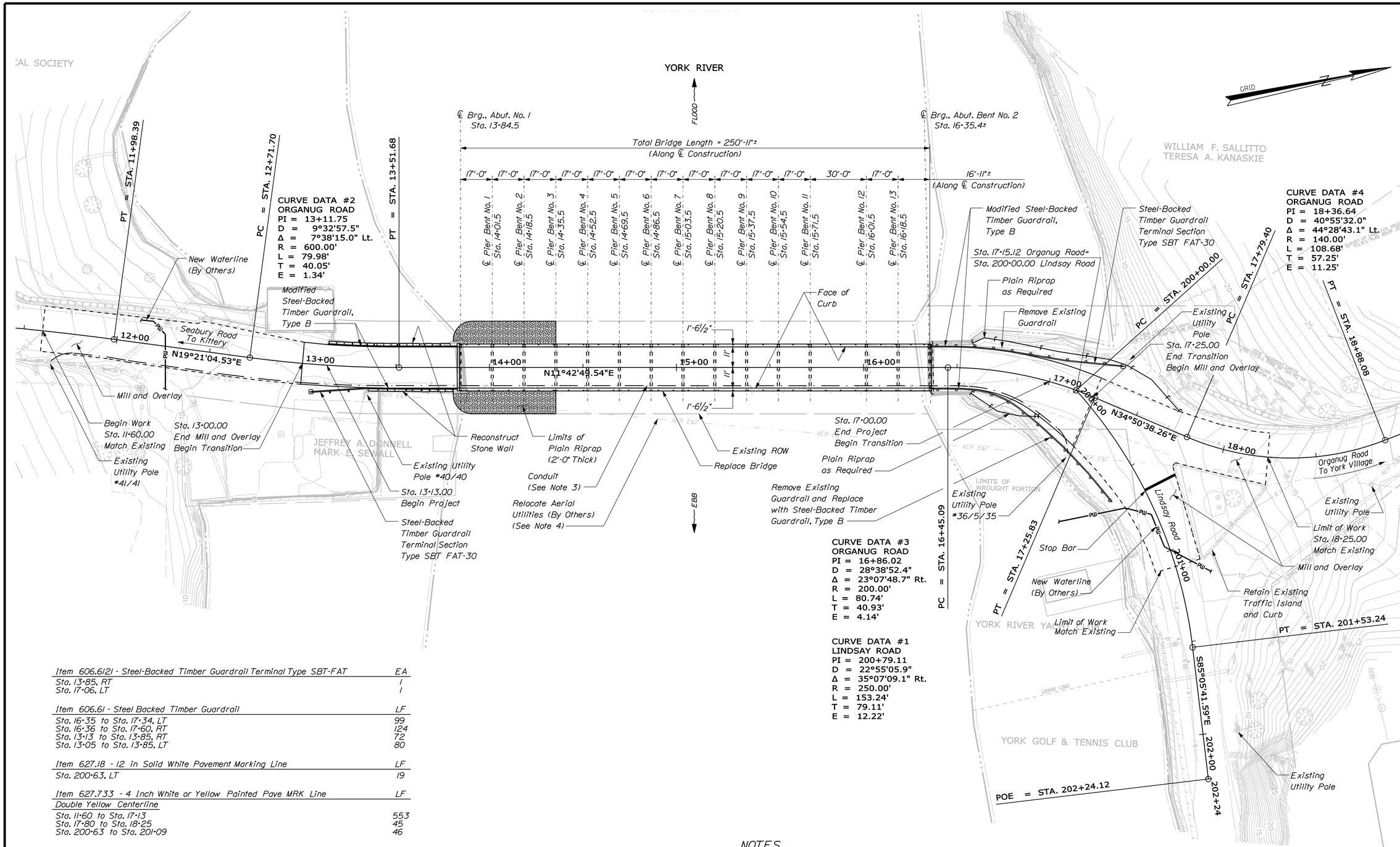

Item 606.6121 - Steel-Backed Timber Guardrail Terminal Type SBT-FAT	EA
Sta. 13+85, RT	1
Sta. 17+06, LT	1

Item 606.61 - Steel Backed Timber Guardrail	LF
Sta. 16+35 to Sta. 17+34, LT	99
Sta. 16+36 to Sta. 17+60, RT	124
Sta. 13+13 to Sta. 13+85, RT	72
Sta. 13+05 to Sta. 13+85, LT	80

Item 627.18 - 12 in Solid White Pavement Marking Line	LF
Sta. 200+63, LT	19

Item 627.733 - 4 Inch White or Yellow Painted Pave MRK Line	LF
Double Yellow Centerline	
Sta. 11+60 to Sta. 17+13	553
Sta. 17+80 to Sta. 18+25	45
Sta. 200+63 to Sta. 201+09	46

Item 645.106 - Demount Regulatory, Warning, Confirmation, and Route Sign	EA
Sta. 16+40, LT - No Littering	1
Sta. 16+40, LT - 12 Ton Weight Limit	1
Navigation Span - Channel	2
Navigation Sign - 5 MPH	2

Item 645.116 - Reinstall Regulatory, Warning, Confirmation, and Route Sign	EA
Sta. 16+40, LT - No Littering	1
Navigation Span - Channel	2
Navigation Span - 5 MPH	2

GENERAL PLAN

25 0 25 50
Scale of Feet

NOTES

1. ROW information provided by MaineDOT.
2. Survey Base Plan by MaineDOT March 7, 2011.
3. Utility conduits are schematically shown. See Utility Details Sheets.
4. The overhead electrical utility between poles #40/40 and #36/5/35 has been gapped. Overhead cable and telephone lines remain.

STATE OF MAINE
DEPARTMENT OF TRANSPORTATION

BR-1266(500)X

WIN 12665.00

BRIDGE PLANS

BRIDGE NO. 3096

STATE OF MAINE Steven M. Hodgdon 11206 LICENSED PROFESSIONAL ENGINEER

PROJ. MANAGER	N. BENOIT	BY	DATE
DESIGN-DETAILED	JAW	KDW	2\12
CHECKED-REVIEWED	SMH	LCG	2\12
DESIGN2-DETAILED2	LSG	CLC	2\12
DESIGN3-DETAILED3	---	---	---
REVISIONS 1	---	---	---
REVISIONS 2	---	---	---
REVISIONS 3	---	---	---
REVISIONS 4	---	---	---
FIELD CHANGES	---	---	---

SIGNATURE
P.E. NUMBER 11206
2/15/2012
DATE

SEWALL'S BRIDGE
YORK RIVER
YORK COUNTY
YORK

GENERAL PLAN

SHEET NUMBER
3
OF 50

Filename: ...\cad\st\planset\003_Plan.dgn Division: Structures Username: kwentworth Date:2/15/2012

DETOUR SIGN SUMMARY

SIGN	SIZE	QTY. / COLOR
DETOUR AHEAD W20-2	48 x 48	3 Black on Orange
ROAD CLOSED 500 FT. W20-3	48 x 48	2 Black on Orange
ROAD CLOSED 1000 FT. W20-3	48 x 48	2 Black on Orange
ROAD CLOSED AHEAD W20-3	48 x 48	1 Black on Orange
Organug Road CLOSED 1 MILE SOUTH	60 x 30	1 Black on White
Organug Road CLOSED 1 MILE NORTH	60 x 30	1 Black on White
ROAD CLOSED 1 MILE AHEAD LOCAL TRAFFIC ONLY R11-3a	60 x 30	2 Black on White
ROAD CLOSED R11-2	48 x 30	2 Black on White
END DETOUR M4-8a	24 x 18	2 Black on Orange
DETOUR M4-9R	30 x 24	3 Black on Orange
DETOUR M4-9L	30 x 24	2 Black on Orange
DETOUR M4-9ST	30 x 24	2 Black on Orange
Organug Rd.	36 x 10	9 Black on Orange
DETOUR M4-10L	48 x 18	1 Black on Orange
DETOUR M4-10R	48 x 18	1 Black on Orange

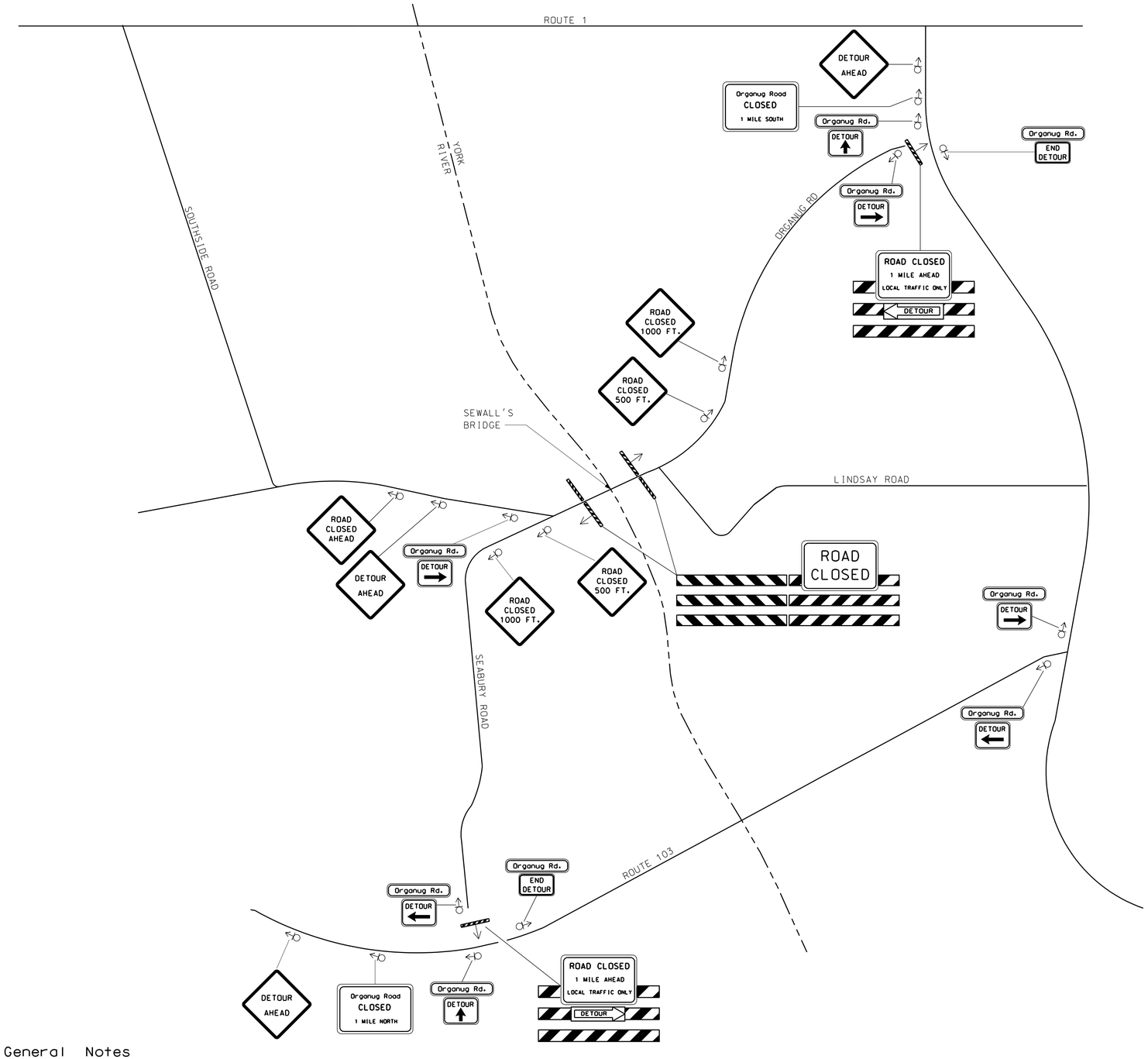

General Notes

1) Other signs may be needed as directed by the Resident.

2) Actual sign locations shall be determined in the field and approved by the Resident.

NOT TO SCALE

STATE OF MAINE
DEPARTMENT OF TRANSPORTATION

BR-1266(500)X

WIN 12665.00

BRIDGE NO. 3096

BRIDGE PLANS

STATE OF MAINE — Steven M. Hodgdon — LICENSED PROFESSIONAL ENGINEER — 11206

Steven M. Hodgdon	SIGNATURE	2\12
11206	P.E. NUMBER	2\12
2/15/2012	DATE	---

PROJ. MANAGER	N. BENOIT		BY	DATE
DESIGN-DETAILED	MaineDOT	---	MaineDOT	2\12
CHECKED-REVIEWED	MaineDOT	---	VHB	---
DESIGN2-DETAILED2	---	---	---	---
DESIGN3-DETAILED3	---	---	---	---
REVISIONS 1	---	---	---	---
REVISIONS 2	---	---	---	---
REVISIONS 3	---	---	---	---
REVISIONS 4	---	---	---	---
FIELD CHANGES	---	---	---	---

SEWALL'S BRIDGE
YORK RIVER
YORK COUNTY
YORK

DETOUR SIGNING PLAN

SHEET NUMBER

4

OF 50

Filename: ...\st\planset\004_detour_01.dgn Division: Structures Username: kwentworth Date:2/15/2012

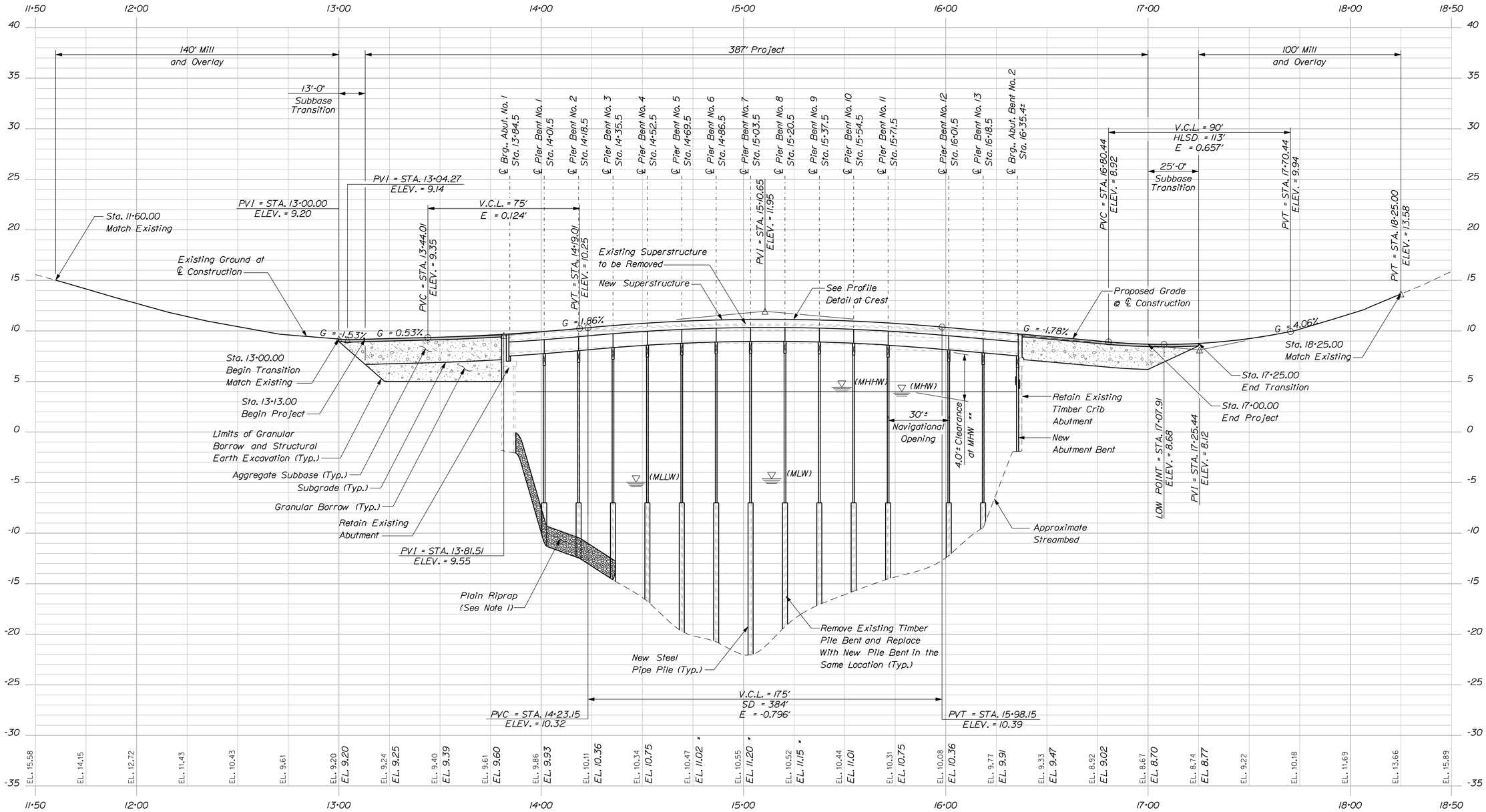

PROFILE

Horiz. 25 0 25 50

Vert. 5 0 5 10

Scale of Feet

** Proposed Vertical Clearance to Match Existing

* Proposed Elevation based on Profile Detail at Crest Instead of Mathematical Curve

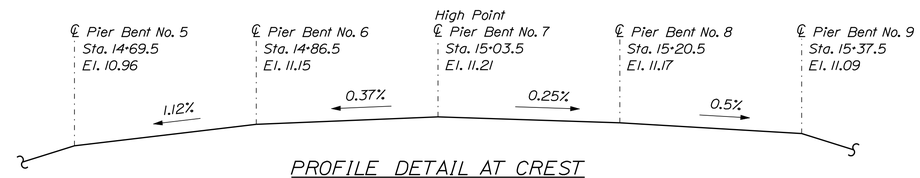

PROFILE DETAIL AT CREST

Not to Scale

NOTES

1. Place riprap on undisturbed ground/channel bottom as shown.

STATE OF MAINE
DEPARTMENT OF TRANSPORTATION

BR-1266(500)X

WIN 12665.00

BRIDGE NO. 3096

BRIDGE PLANS

STATE OF MAINE — Steven M. Hodgdon — LICENSED PROFESSIONAL ENGINEER — 11206

PROJ. MANAGER	N. BENOIT		
DESIGN-DETAILED	JAW	KDW	2\12
CHECKED-REVIEWED	SMH	LCG	2\12
DESIGN2-DETAILED2	LSG	CLC	2\12
DESIGN3-DETAILED3	---	---	---
REVISIONS 1	---	---	---
REVISIONS 2	---	---	---
REVISIONS 3	---	---	---
REVISIONS 4	---	---	---
FIELD CHANGES	---	---	---

Steven M. Hodgdon — SIGNATURE — 2/15/2012

11206 — P.E. NUMBER — DATE

SEWALL'S BRIDGE
YORK RIVER
YORK COUNTY
YORK

PROFILE

SHEET NUMBER

5

OF 50

Filename: ...\cad\st\planset\005_Profile.dgn Division: Structures Username: kwentworth Date:2/15/2012

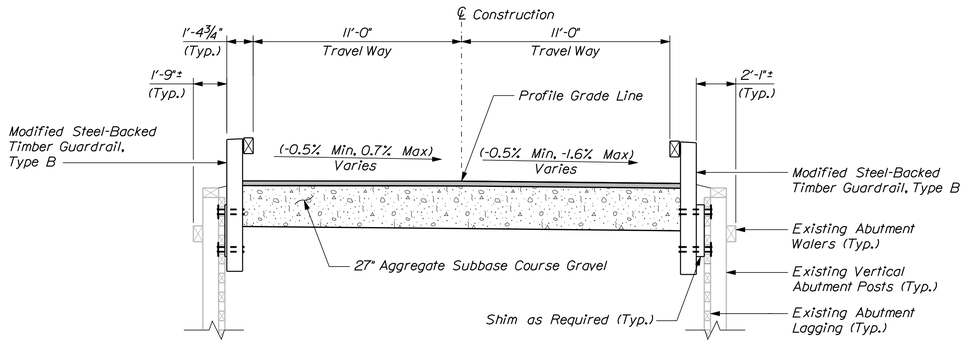

Travel way and Shoulder Surface: 2 Lifts at 1½" Hot Mix Asphalt (9.5 mm)

NORTH APPROACH
(Looking Upstation)
(Sta. 16+35.4 to Sta. 16+58.8)

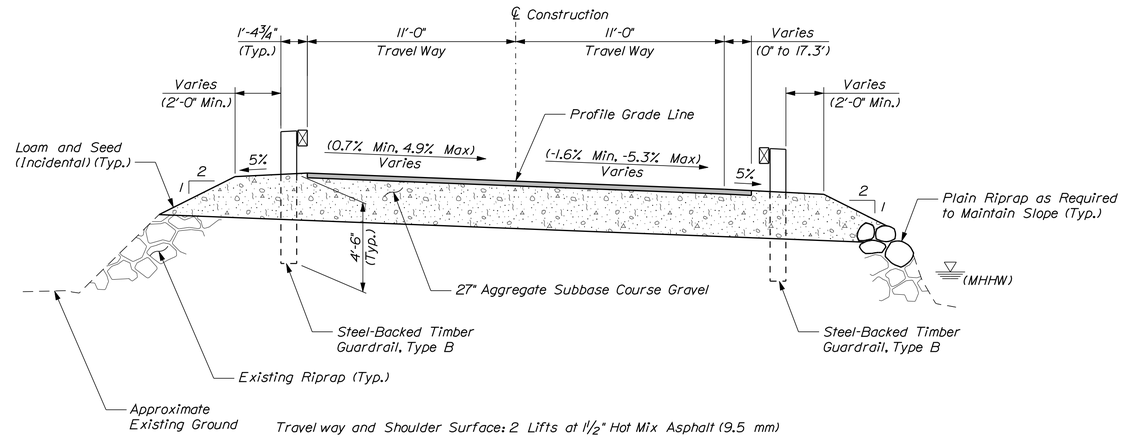

Travel way and Shoulder Surface: 2 Lifts at 1½" Hot Mix Asphalt (9.5 mm)

NORTH APPROACH
(Looking Upstation)
(Sta. 16+58.8 to Sta. 17+25.0)

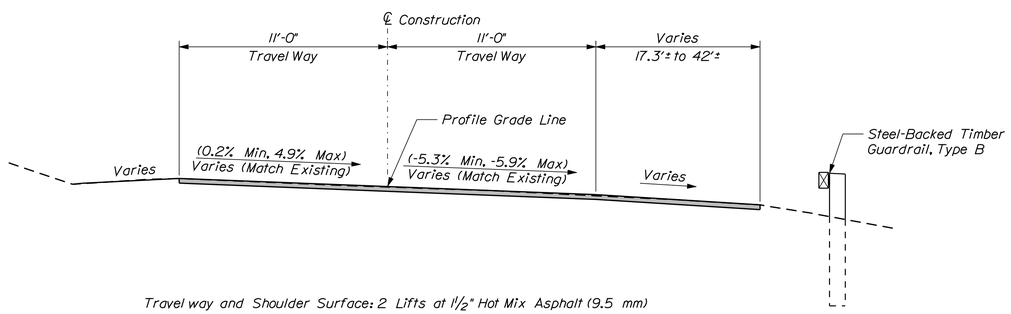

Travel way and Shoulder Surface: 2 Lifts at 1½" Hot Mix Asphalt (9.5 mm)

NORTH APPROACH
(Looking Upstation)
(Sta. 17+25.0 to Sta. 17+70.0)

SUPERELEVATION TABLE				
Left Shoulder %	Left Travelway %	Station	Right Travelway %	Right Shoulder %
	-2.4	13+00.00	-2.6	
	-3.4	13+25.00	-2.8	
	-2.7	13+50.00	-1.8	
	-1.1	13+75.00	-0.9	
	-0.5	13+83.00 TO 16+40.00	-0.5	
	+0.1	16+50.00	-1.1	
-5.0	+1.7	16+75.00	-2.5	
	+3.3	17+00.00	-3.9	
	+4.9	17+25.00	-5.3	-5.0
	+2.2	17+50.00	-5.9	
	+0.2	17+70.00	-5.6	

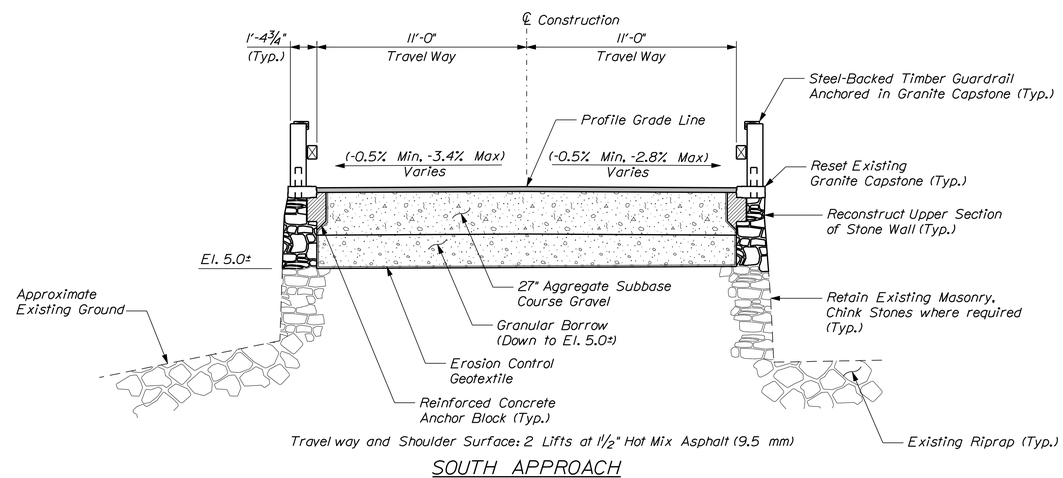

Travel way and Shoulder Surface: 2 Lifts at 1½" Hot Mix Asphalt (9.5 mm)

SOUTH APPROACH
(Looking Upstation)
(Sta. 13+13.00 to Bridge)

NOTE

1. Utilities not shown.

STATE OF MAINE
DEPARTMENT OF TRANSPORTATION

BR-1266(500)X

WIN 12665.00

BRIDGE NO. 3096

BRIDGE PLANS

STATE OF MAINE — Steven M. Hodgdon — No. 11206 — LICENSED PROFESSIONAL ENGINEER

		BY	DATE
PROJ. MANAGER	N. BENOIT		
DESIGN-DETAILED	JAW	KDW	2\12
CHECKED-REVIEWED	SMH	LCG	2\12
DESIGN2-DETAILED2	LSG	CLC	2\12
DESIGN3-DETAILED3	---	---	---
REVISIONS 1	---	---	---
REVISIONS 2	---	---	---
REVISIONS 3	---	---	---
REVISIONS 4	---	---	---
FIELD CHANGES	---	---	---

Steven M. Hodgdon — SIGNATURE
11206 — P.E. NUMBER
2/15/2012 — DATE

SEWALL'S BRIDGE
YORK RIVER
YORK COUNTY
YORK

TYPICAL ROADWAY SECTIONS

SHEET NUMBER
6
OF 50

Filename: ...\plansel\006_Typ Sections.dgn Division: Structures Username: kwentworth Date:2/15/2012

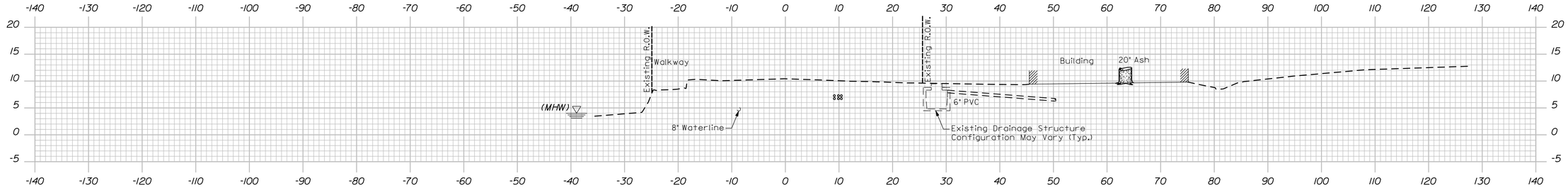

12+50.00

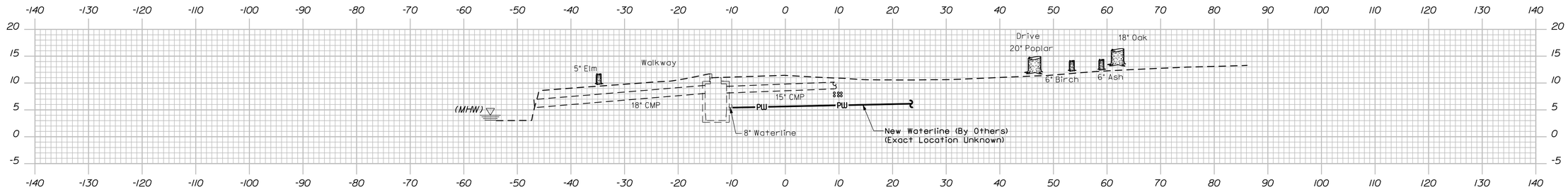

12+25.00

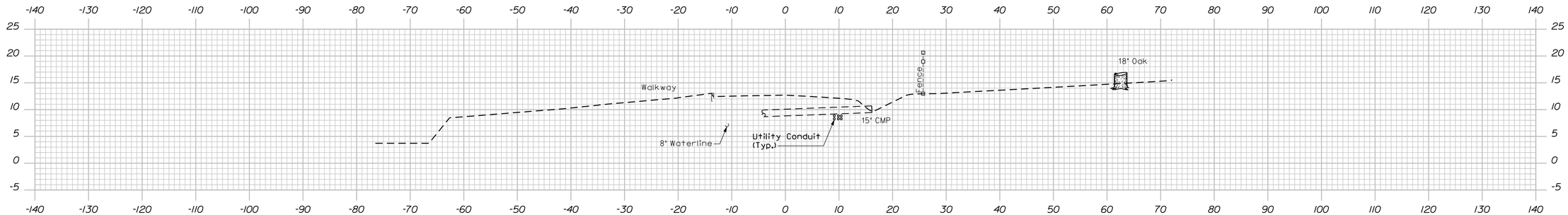

12+00.00

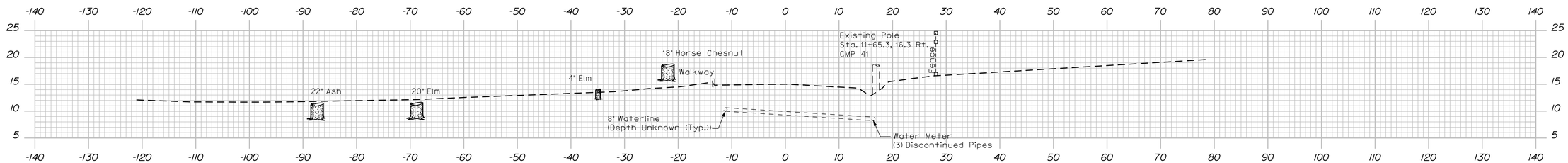

11+60.00

Note: Waterline Elevations are Approximate.

STATE OF MAINE
DEPARTMENT OF TRANSPORTATION

BR-1266(500)X

WIN 12665.00

BRIDGE NO. 3096

BRIDGE PLANS

STATE OF MAINE
Steven M. Hodgdon
11206
LICENSED PROFESSIONAL ENGINEER

Steven M. Hodgdon
SIGNATURE

11206
P.E. NUMBER

2/15/2012
DATE

PROJ. MANAGER	N. BENOIT	BY	DATE
DESIGN-DETAILED	JAW	KDW	2\12
CHECKED-REVIEWED	SMH	LCG	2\12
DESIGN2-DETAILED2	LSG	CLC	2\12
DESIGN3-DETAILED3	---	---	---
REVISIONS 1	---	---	---
REVISIONS 2	---	---	---
REVISIONS 3	---	---	---
REVISIONS 4	---	---	---
FIELD CHANGES	---	---	---

SEWALL'S BRIDGE
YORK RIVER
YORK COUNTY
YORK

CROSS SECTIONS (1 OF 6)

SHEET NUMBER
7
OF 50

Sta. 11+60.00 to Sta. 12+50.00

Filename: ...\planset\007_Section11+60.dgn Division: Structures Username: kwentworth Date:2/15/2012

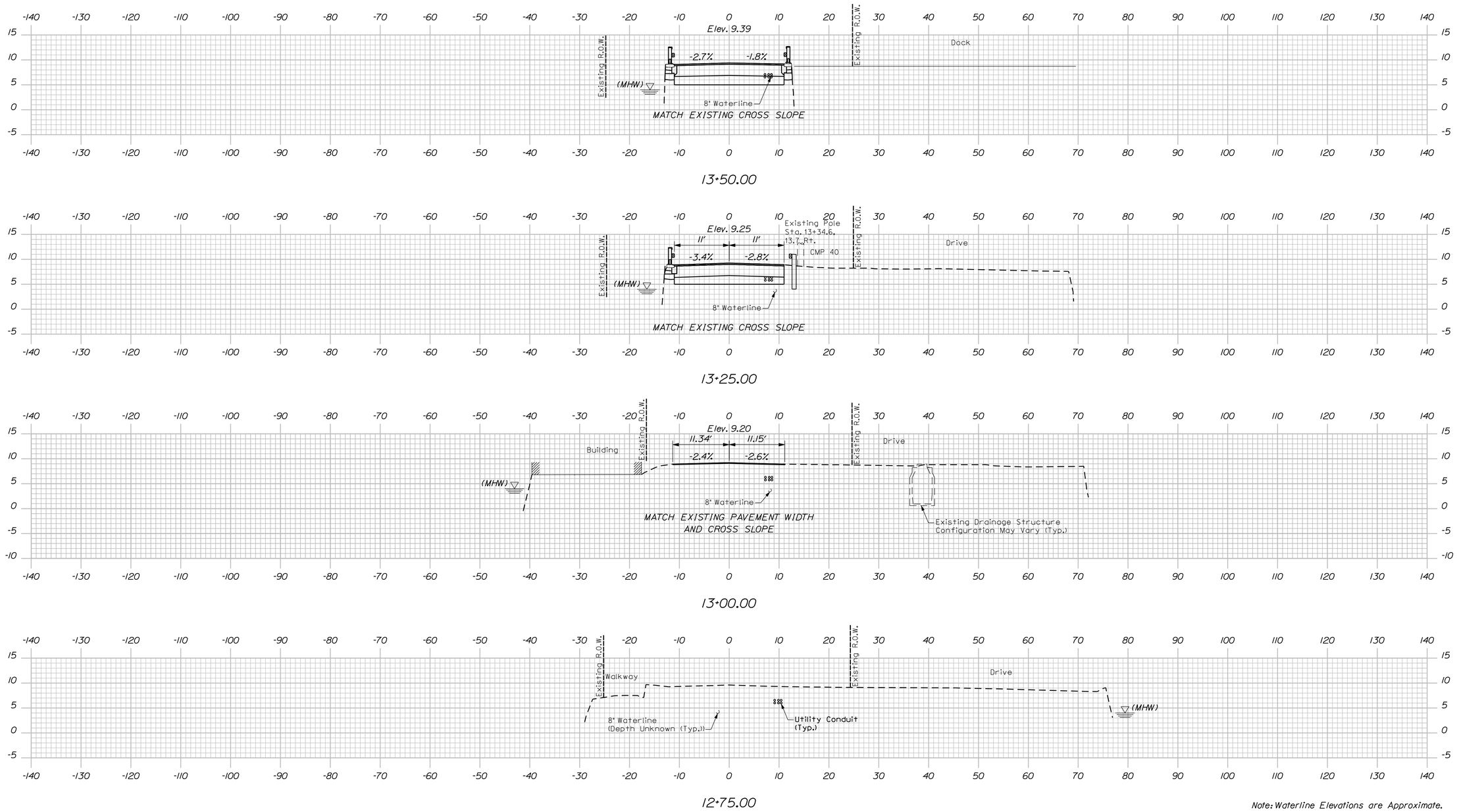

Note: Waterline Elevations are Approximate.

STATE OF MAINE
DEPARTMENT OF TRANSPORTATION

BR-1266(500)X

WIN 12665.00

BRIDGE NO. 3096

BRIDGE PLANS

STATE OF MAINE
Steven M. Hodgdon
No. 11206
LICENSED
PROFESSIONAL ENGINEER

PROJ. MANAGER	N. BENOIT	BY	DATE
DESIGN-DETAILED	JAW	KDW	2\12
CHECKED-REVIEWED	SMH	LCG	2\12
DESIGN2-DETAILED2	LSG	CLC	2\12
DESIGN3-DETAILED3	---	---	---
REVISIONS 1	---	---	---
REVISIONS 2	---	---	---
REVISIONS 3	---	---	---
REVISIONS 4	---	---	---
FIELD CHANGES	---	---	---

SIGNATURE

11206
P.E. NUMBER

2/15/2012
DATE

SEWALL'S BRIDGE
YORK RIVER
YORK COUNTY
YORK

CROSS SECTIONS (2 OF 6)

SHEET NUMBER
8
OF 50

Sta. 12+75.00 to Sta. 13+50.00

Filename: ...\planset\008_Section12+75.dgn Division: Structures Username: kwentworth Date:2/15/2012

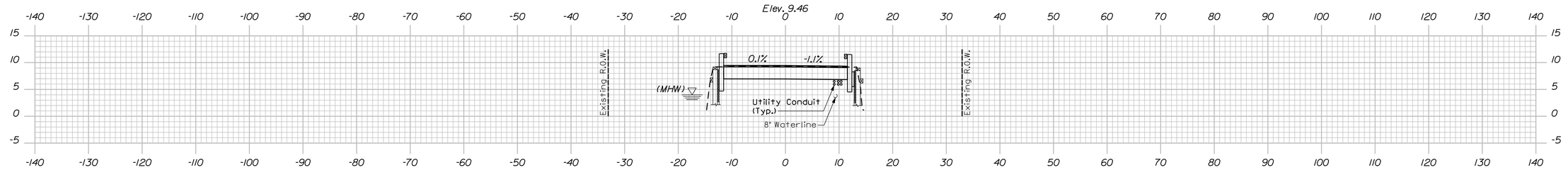

16+50.00

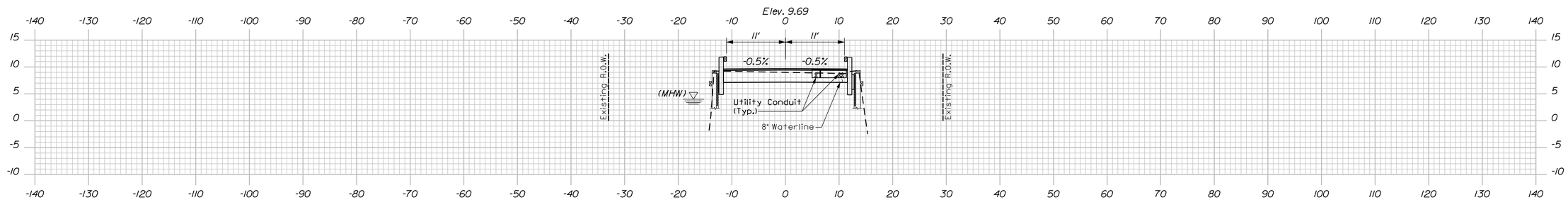

16+37.00

BRIDGE

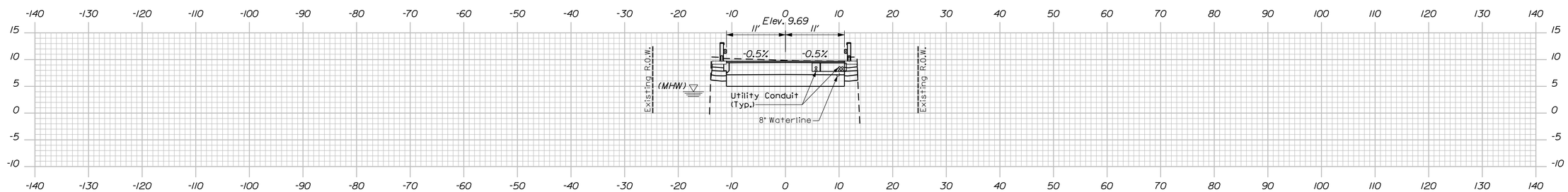

13+83.00

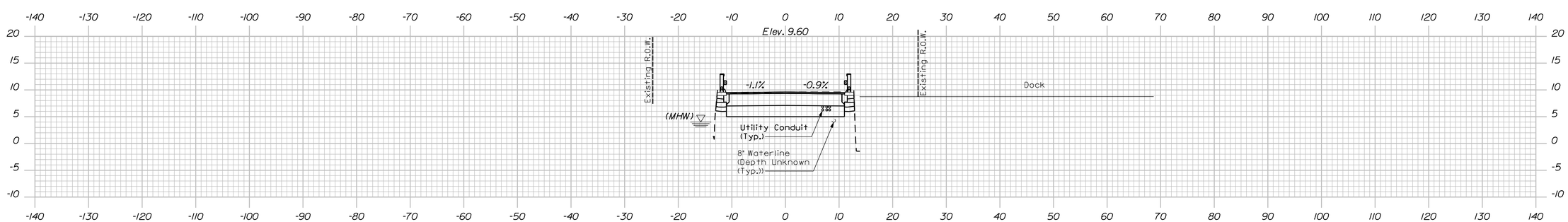

13+75.00

Note: Waterline Elevations are Approximate.

STATE OF MAINE
DEPARTMENT OF TRANSPORTATION

BR-1266(500)X

WIN 12665.00

BRIDGE NO. 3096

BRIDGE PLANS

STATE OF MAINE
Steven M. Hodgdon
11206
LICENSED PROFESSIONAL ENGINEER

PROJ. MANAGER	N. BENOIT	BY	DATE
DESIGN-DETAILED	JAW	KDW	2\12
CHECKED-REVIEWED	SMH	LCG	2\12
DESIGN2-DETAILED2	LSG	CLC	2\12
DESIGN3-DETAILED3	---	---	---
REVISIONS 1	---	---	---
REVISIONS 2	---	---	---
REVISIONS 3	---	---	---
REVISIONS 4	---	---	---
FIELD CHANGES	---	---	---

SIGNATURE

11206
P.E. NUMBER

2/15/2012
DATE

SEWALL'S BRIDGE
YORK RIVER
YORK COUNTY
YORK

CROSS SECTIONS (3 OF 6)

SHEET NUMBER
9
OF 50

Sta. 13+75.00 to Sta. 16+50.00

Filename: ...\planset\009_Section13+75.dgn Division: Structures Username: kwentworth Date:2/15/2012

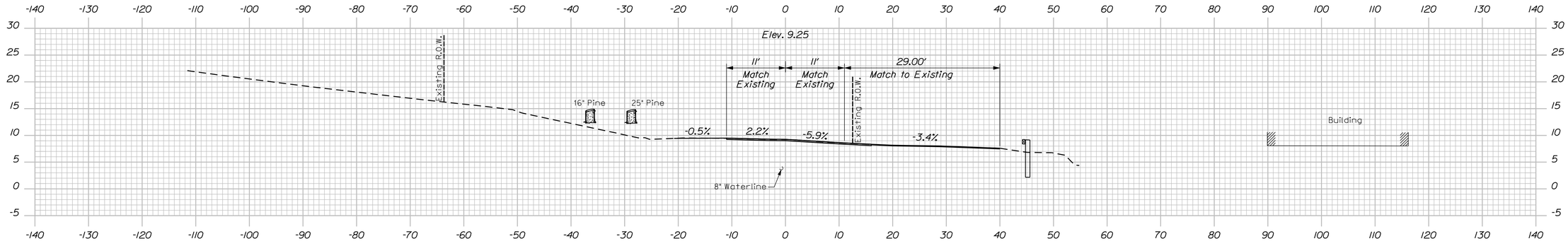

17+50.00

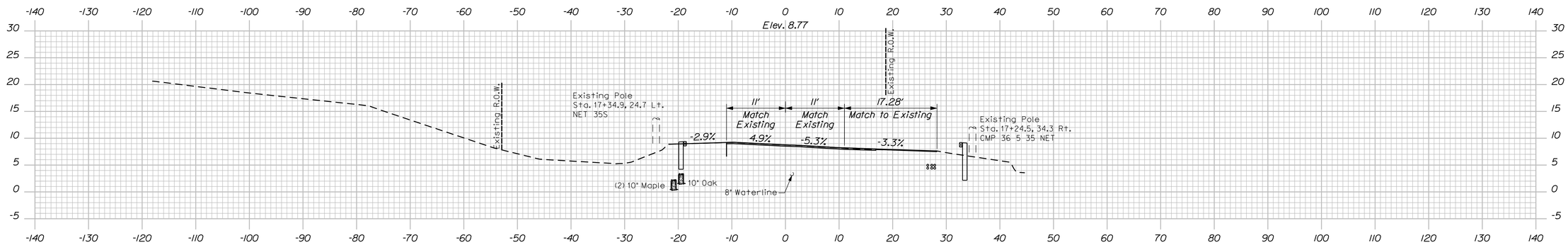

17+25.00

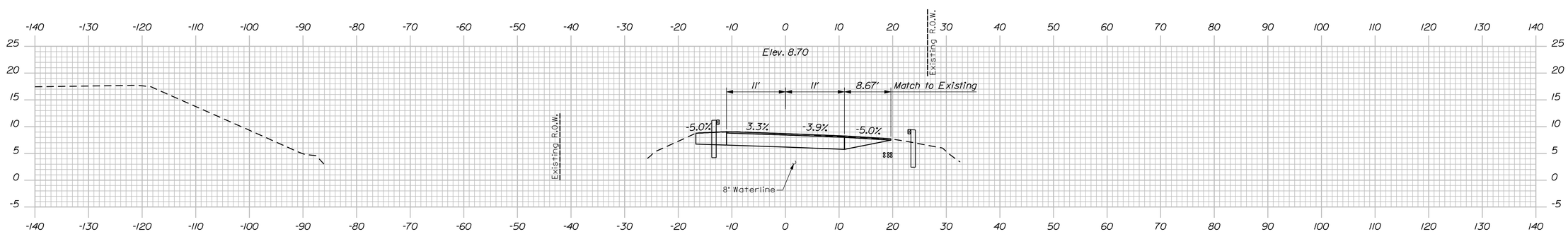

17+00.00

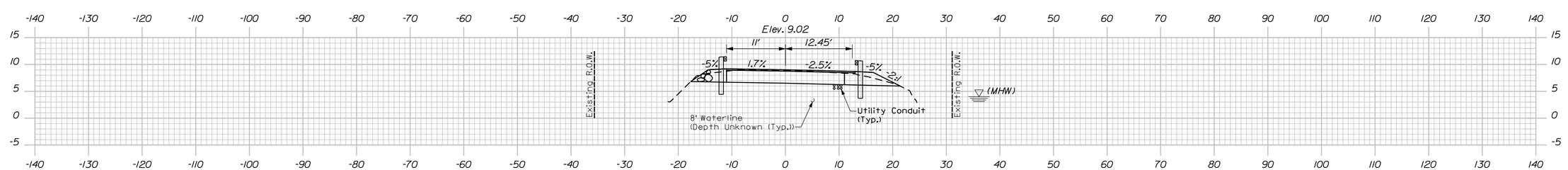

16+75.00

Note: Waterline Elevations are Approximate.

STATE OF MAINE
DEPARTMENT OF TRANSPORTATION

BR-1266(500)X

WIN 12665.00

BRIDGE NO. 3096

BRIDGE PLANS

STATE OF MAINE — Steven M. Hodgdon — LICENSED PROFESSIONAL ENGINEER — 11206

PROJ. MANAGER	N. BENOIT		
DESIGN-DETAILED	JAW	KDW	2/12
CHECKED-REVIEWED	SMH	LCG	2/12
DESIGN2-DETAILED2	LSG	CLC	2/12
DESIGN3-DETAILED3	---	---	---
REVISIONS 1	---	---	---
REVISIONS 2	---	---	---
REVISIONS 3	---	---	---
REVISIONS 4	---	---	---
FIELD CHANGES	---	---	---

SIGNATURE
11206
P.E. NUMBER
2/15/2012
DATE

SEWALL'S BRIDGE
YORK RIVER
YORK COUNTY
YORK

CROSS SECTIONS (4 OF 6)

SHEET NUMBER
10
OF 50

Sta. 16+75.00 to Sta. 17+50.00

Filename: ...\planset\010_Section16+75.dgn Division: Structures Username: kwentworth Date:2/15/2012

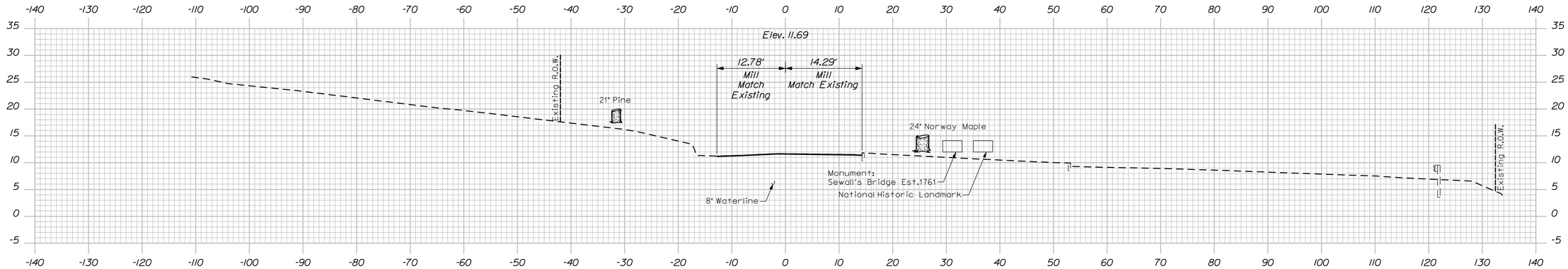

18+00.00

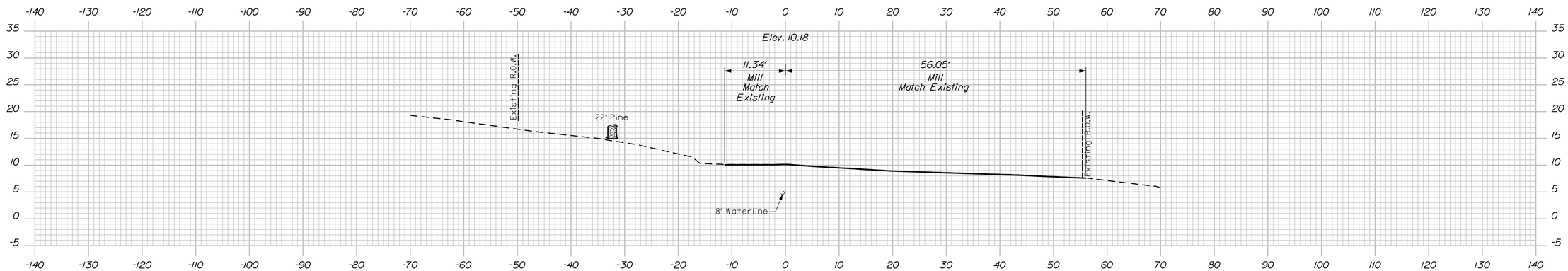

17+75.00

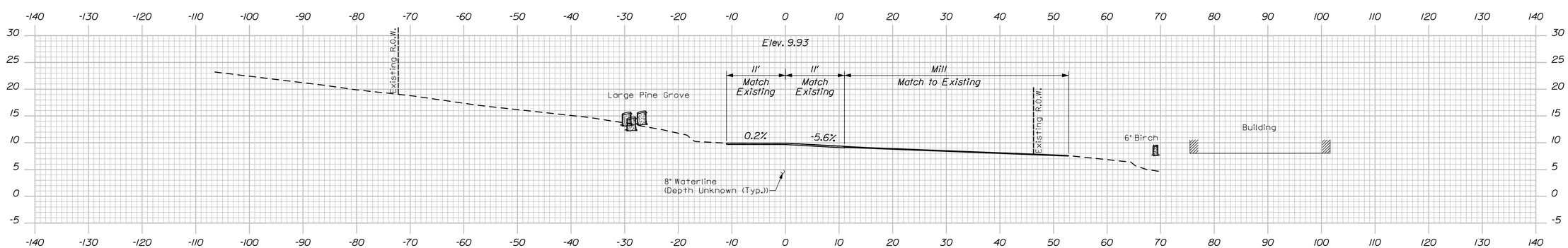

17+70.00

Note: Waterline Elevations are Approximate.

STATE OF MAINE
DEPARTMENT OF TRANSPORTATION

BR-1266(500)X

WIN 12665.00

BRIDGE NO. 3096

BRIDGE PLANS

STATE OF MAINE
Steven M. Hodgdon
11206
LICENSED
PROFESSIONAL ENGINEER

Steven M. Hodgdon
SIGNATURE

11206
P.E. NUMBER

2/15/2012
DATE

		BY	DATE
PROJ. MANAGER	N. BENOIT		
DESIGN-DETAILED	JAW	KDW	2\12
CHECKED-REVIEWED	SMH	LCG	2\12
DESIGN2-DETAILED2	LSG	CLC	2\12
DESIGN3-DETAILED3	---	---	---
REVISIONS 1	---	---	---
REVISIONS 2	---	---	---
REVISIONS 3	---	---	---
REVISIONS 4	---	---	---
FIELD CHANGES	---	---	---

SEWALL'S BRIDGE
YORK RIVER
YORK COUNTY
YORK

CROSS SECTIONS (5 OF 6)

SHEET NUMBER
11
OF 50

Sta. 17+70.00 to Sta. 18+00.00

Filename: ...\planset\011_Section17+70.dgn Division: Structures Username: kwentworth Date:2/15/2012

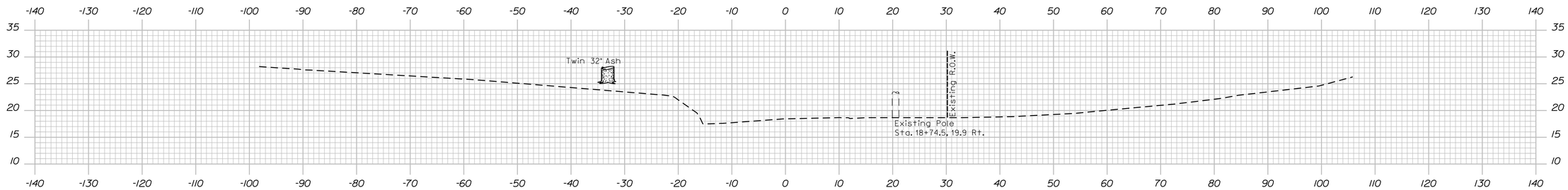

18+75.00

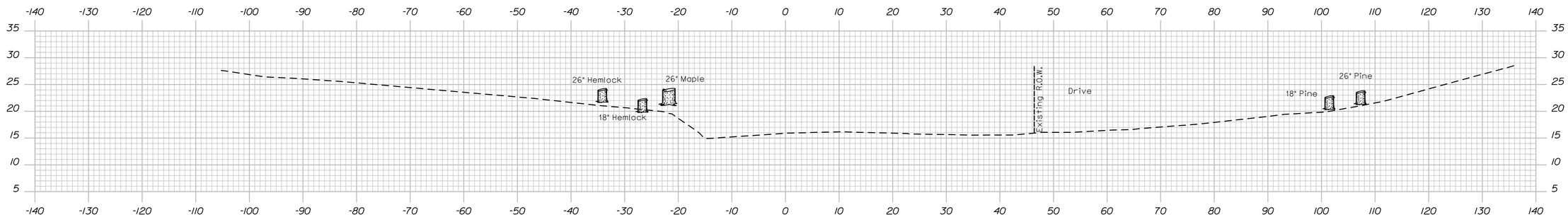

18+50.00

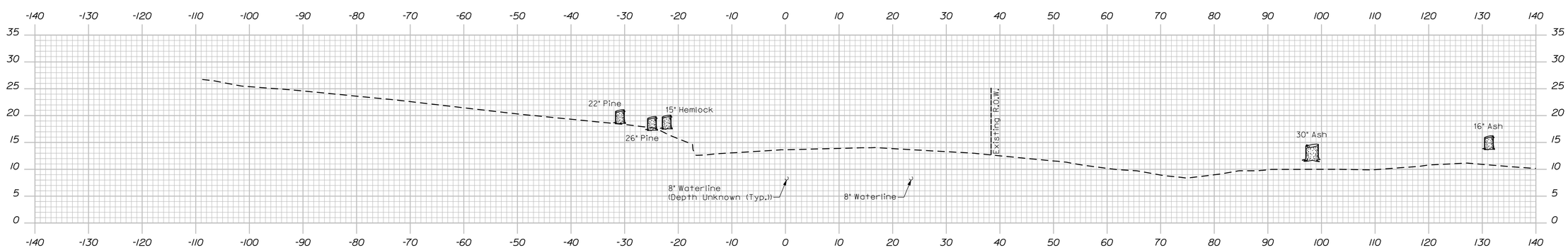

18+25.00

Note: Waterline Elevations are Approximate.

STATE OF MAINE
DEPARTMENT OF TRANSPORTATION

BR-1266(500)X

WIN 12665.00

BRIDGE NO. 3096

BRIDGE PLANS

STATE OF MAINE
Steven M. Hodgdon
11206
LICENSED PROFESSIONAL ENGINEER

PROJ. MANAGER	N. BENOIT		
DESIGN-DETAILED	JAW	KDW	2\12
CHECKED-REVIEWED	SMH	LCG	2\12
DESIGN2-DETAILED2	LSG	CLC	2\12
DESIGN3-DETAILED3	---	---	---
REVISIONS 1	---	---	---
REVISIONS 2	---	---	---
REVISIONS 3	---	---	---
REVISIONS 4	---	---	---
FIELD CHANGES	---	---	---

SIGNATURE

11206

P.E. NUMBER

2/15/2012

DATE

SEWALL'S BRIDGE
YORK RIVER
YORK COUNTY
YORK

CROSS SECTIONS (6 OF 6)

SHEET NUMBER

12

OF 50

Sta. 18+25.00 to Sta. 18+75.00

Filename: ...\planset\012_Section18+25.dgn Division: Structures Username: kwentworth Date:2/15/2012

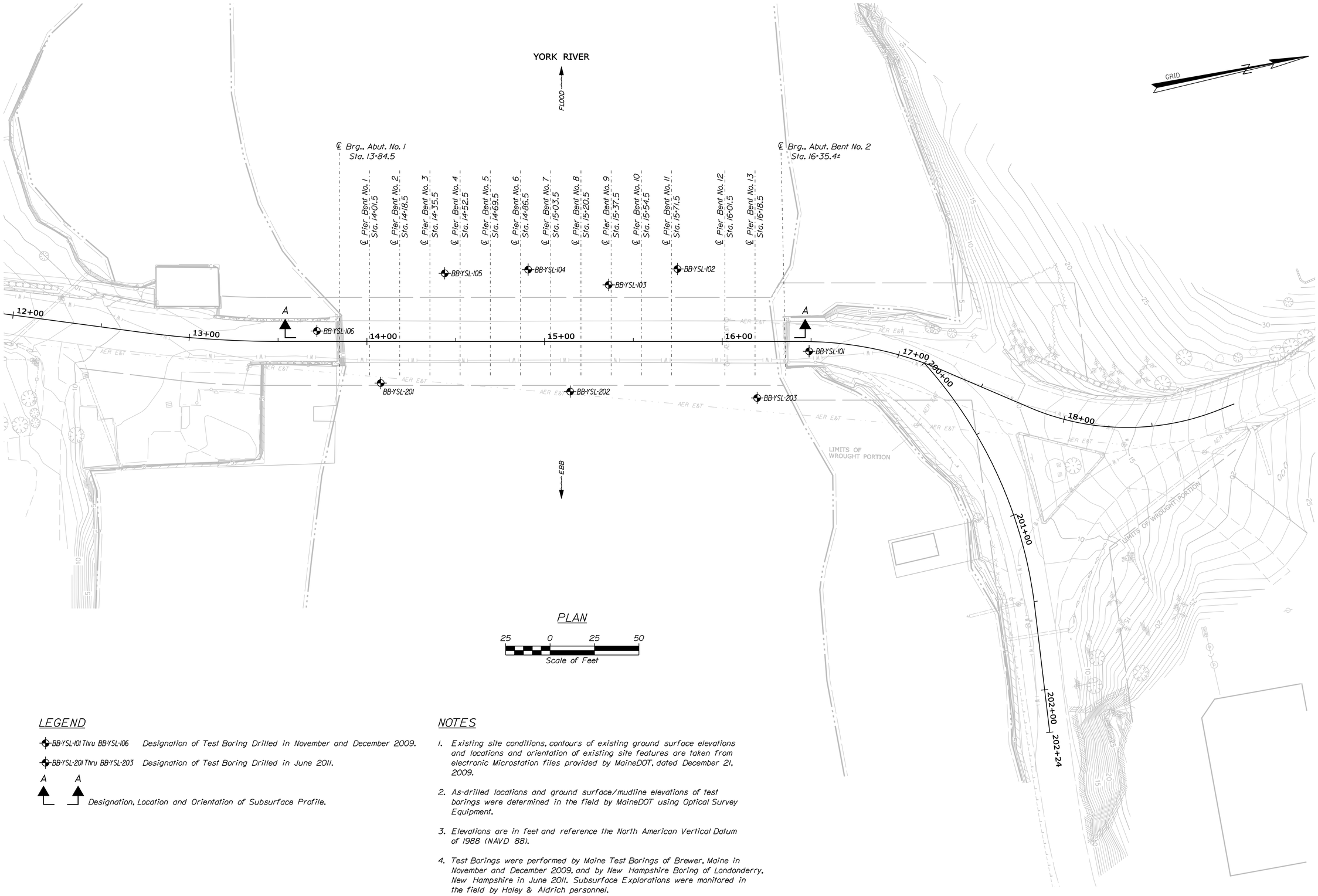

PLAN

25 0 25 50

Scale of Feet

LEGEND

BB-YSL-101 Thru BB-YSL-106 Designation of Test Boring Drilled in November and December 2009.

BB-YSL-201 Thru BB-YSL-203 Designation of Test Boring Drilled in June 2011.

A A Designation, Location and Orientation of Subsurface Profile.

NOTES

1. Existing site conditions, contours of existing ground surface elevations and locations and orientation of existing site features are taken from electronic Microstation files provided by MaineDOT, dated December 21, 2009.
2. As-drilled locations and ground surface/mudline elevations of test borings were determined in the field by MaineDOT using Optical Survey Equipment.
3. Elevations are in feet and reference the North American Vertical Datum of 1988 (NAVD 88).
4. Test Borings were performed by Maine Test Borings of Brewer, Maine in November and December 2009, and by New Hampshire Boring of Londonderry, New Hampshire in June 2011. Subsurface Explorations were monitored in the field by Haley & Aldrich personnel.

STATE OF MAINE
DEPARTMENT OF TRANSPORTATION

BR-1266(500)X

WIN 12665.00

BRIDGE NO. 3096

BRIDGE PLANS

STATE OF MAINE Steven M. Hodgdon No. 11206 LICENSED PROFESSIONAL ENGINEER

PROJ. MANAGER	N. BENOIT	BY	DATE
DESIGN-DETAILED	LSG	KDW	2\12
CHECKED-REVIEWED	SMH	LSG	2\12
DESIGN2-DETAILED2	...	...	...
DESIGN3-DETAILED3	...	...	...
REVISIONS 1	...	...	...
REVISIONS 2	...	...	...
REVISIONS 3	...	...	...
REVISIONS 4	...	...	...
FIELD CHANGES	...	...	...

Steven M. Hodgdon
SIGNATURE
11206
P.E. NUMBER
2/15/2012
DATE

SEWALL'S BRIDGE
YORK RIVER
YORK COUNTY
YORK

BORING LOCATION PLAN

SHEET NUMBER

13

OF 50

Filename: ...\cad\st\planset\013_borplan.dgn Division: Structures Username: kwentworth Date:2/15/2012

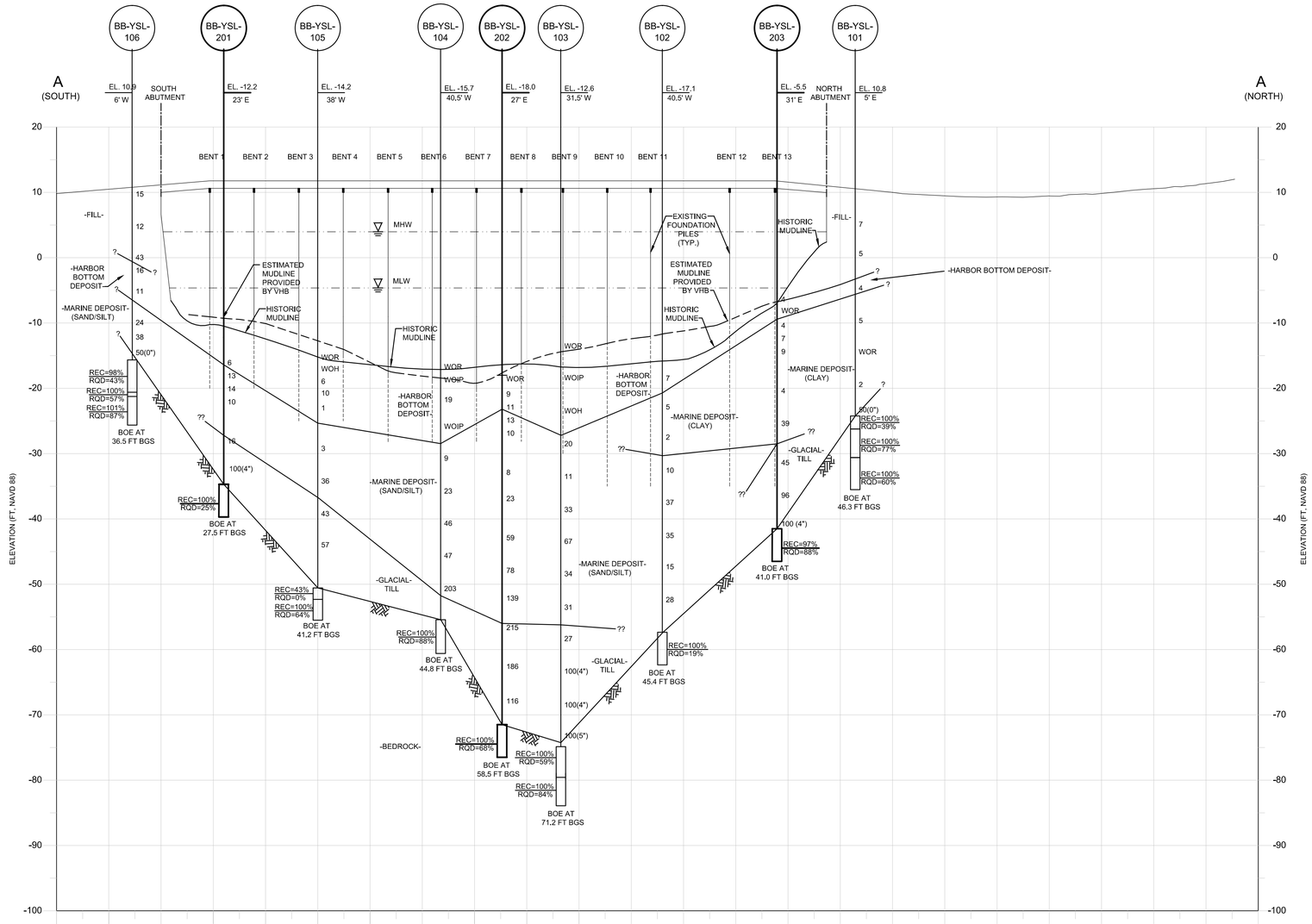

LEGEND:

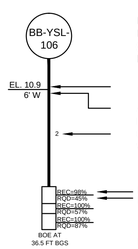

DESIGNATION AND APPROXIMATE LOCATION OF TEST BORING DRILLED BY MAINE TEST BORINGS OF BREWER, MAINE BETWEEN 11 NOVEMBER AND 10 DECEMBER 2009 (BB-YSL-100 SERIES) AND BY NEW HAMPSHIRE BORING OF LONDONDERRY, NEW HAMPSHIRE BETWEEN 8 AND 15 JUNE 2011 (BB-YSL-200 SERIES).”

GROUND SURFACE / MUDLINE ELEVATION AT TEST BORING LOCATION

APPROXIMATE PERPENDICULAR OFFSET DISTANCE AND DIRECTION MEASURED FROM THE SUBSURFACE PROFILE LINE (CONSTRUCTION CENTERLINE)
CORRECTED STANDARD PENETRATION TEST (SPT) N-VALUE (N 60 BLOWS PER FOOT);
WOR = WEIGHT OF RODS; WOH = WEIGHT OF HAMMER; WO1P = WEIGHT OF ONE PERSON

PERCENT RECOVERY
PERCENT ROCK QUALITY DESIGNATION (RQD)

DENOTES BOTTOM OF EXPLORATION AT APPROXIMATE DEPTH SHOWN

NOTES:

1. SEE BORING LOCATION PLAN FOR THE LOCATION AND ORIENTATION OF THE SUBSURFACE PROFILE (EXISTING BRIDGE CENTERLINE).
2. THE LOCATION AND ORIENTATION OF THE EXISTING BRIDGE DECK AND BENTS, FOUNDATION PILE LENGTHS AND EMBEDMENTS, AND ESTIMATED MUDLINE (ALONG EAST END OF BRIDGE) ARE TAKEN FROM THE ELECTRONIC PDF FILE ENTITLED “PARTIAL ELEVATION”, PROVIDED TO HALEY & ALDRICH, INC. BY VHB ON 4 JANUARY 2010.
3. THE HISTORIC MUDLINE, GROUND SURFACE OF THE APPROACH EMBANKMENTS AND ABUTMENT GEOMETRY WERE SCALED FROM HISTORIC DRAWINGS OF EXISTING BRIDGE PROVIDED BY MAINEDOT, AND SHOULD BE CONSIDERED APPROXIMATE.
4. MEAN ELEVATIONS ARE BASED ON NOAA NATIONAL OCEAN SERVICE TIDAL REFERENCE STATION #8423898 LOCATED AT FORT POINT, NEWCASTLE ISLAND, NEW HAMPSHIRE. ELEVATIONS FROM THE NATIONAL TIDAL DATUM EPOCH (NTDE) OF 1983 TO 2001 HAVE BEEN ADJUSTED TO THE PROJECT VERTICAL DATUM OF NAVD 88.
5. “AS-DRILLED” LOCATIONS AND GROUND SURFACE / MUDLINE ELEVATIONS OF TEST BORINGS WERE DETERMINED IN THE FIELD BY MAINEDOT USING OPTICAL SURVEY EQUIPMENT.
6. ELEVATIONS ARE IN FEET AND REFERENCE THE NORTH AMERICAN VERTICAL DATUM OF 1988 (NAVD 88).
7. LINES REPRESENTING CHANGES IN STRATA SHOWN ON THE PROFILE ARE BASED ON LINEAR INTERPOLATION BETWEEN SUBSURFACE EXPLORATIONS AND DEPICT ANTICIPATED SUBSURFACE CONDITIONS ALONG THE EXISTING BRIDGE CENTERLINE. THE ACTUAL CONDITIONS WILL DIFFER FROM THOSE SHOWN.

HORIZ. 0 25 50 75 100
VERT. 0 10 20 30 40
SCALE IN FEET

STATE OF MAINE
DEPARTMENT OF TRANSPORTATION

BR-1266(500)X

WIN 12665.00

BRIDGE NO. 3096

BRIDGE PLANS

STATE OF MAINE MAYNE A. CHADBOURNE No. 10820 LICENSED PROFESSIONAL ENGINEER

PROJ. MANAGER	N. BENOIT		
DESIGN-DETAILED	KFP	KFP	9/9/11
CHECKED-REVIEWED	EFW	WAC	9/9/11
DESIGN2-DETAILED2			
DESIGN3-DETAILED3			
REVISIONS 1			
REVISIONS 2			
REVISIONS 3			
REVISIONS 4			
FIELD CHANGES			

SIGNATURE
P.E. NUMBER
DATE

SEWALL'S BRIDGE
YORK RIVER
YORK COUNTY
YORK

INTERPRETIVE SUBSURFACE PROFILE

SHEET NUMBER
14
OF 50

G:\36654_SEWALLS BRIDGE\Global\CAD\DRAWINGS\36654_000_003D_PROFILE.dwg

Maine Department of Transportation

Soil/Rock Exploration Log
US CUSTOMARY UNITS

Project: Sewall's Bridge Replacement
Location: York, Maine

Boring No.: BB-YSL-101
PIN: 12665.00

Driller:	Maine Test Borings	Elevation (ft.): 10.8	Auger ID/OD: -
Operator:	B. Enos	Datum: NAVD 88	Sampler: Split Spoon-1.375 in. in
Logged By:	M. Snow	Rig Type: Mobile B53 Truck	Hammer Wt./Fall: 140/30-SS, 300/16-NW
Date Start/Finish:	11/12/09-11/12/09	Drilling Method: SSA to 5', NW to 35'	Core Barrel: NQ-2.0
Boring Location:	See Plan (N110629.6, E908043.6)	Casing ID/OD: NW 3.0	Water Level*: Tidal
Hammer Efficiency Factor: 0.6		Hammer Type: Automatic ☐ Hydraulic ☐ Rope & Cathead ☒	

Definitions:
D = Split Spoon Sample
MD = Unsuccessful Split Spoon Sample attempt
U = Thin Wall Tube Sample
MU = Unsuccessful Thin Wall Tube Sample attempt
V = Insitu Vane Shear Test
MV = Unsuccessful Insitu Vane Shear Test attempt
R = Rock Core Sample
SSA = Solid Stem Auger
HSA = Hollow Stem Auger
RC = Roller Cone
WOH = weight of 140lb. hammer
WOR = weight of rods
WOIP = weight of one person
S_u = Insitu Field Vane Shear Strength (psf)
T_v = Pocket Torvane Shear Strength (psf)
q_p = Unconfined Compressive Strength (ksf)
N-uncorrected = Raw field SPT N-value
Hammer Efficiency Factor = Annual Calibration Value
N_{60} = SPT N-uncorrected corrected for hammer efficiency
N_{60} = (Hammer Efficiency Factor/60%)*N-uncorrected
$S_{u(lab)}$ = Lab Vane Shear Strength (psf)
WC = water content, percent
LL = Liquid Limit
PL = Plastic Limit
PI = Plasticity Index
G = Grain Size Analysis
C = Consolidation Test

Depth (ft.)	Sample No.	Pen./Rec. (in.)	Sample Depth (ft.)	Blows (/6 in. Shear Strength (psf) or RQD (%))	N-uncorrected	N60	Casing Blows	Elevation (ft.)	Graphic Log	Visual Description and Remarks	Laboratory Testing Results/ AASHTO and Unified Class
0	1D	12/4	0.8 - 1.8	10/50			SSA	10.1		~Bituminous Concrete~ (0.7)	
										Dark brown, dry, very dense, medium SAND, some fine gravel, little coarse to fine sand -FILL-(SW) Note: Brick fragments in wash water.	
5	2D	24/10	5.0 - 7.0	5/4/3/2	7	7	14	5.8 (5.0)		Dark brown, wet, medium stiff, sandy SILT, little fine gravel -FILL-(ML)	
							15				
							10				
							8				
10	3D	24/5	10.0 - 12.0	3/2/3/9	5	5	14			Dark brown, wet, medium stiff, sandy SILT, some gravel, trace brick -FILL-(ML)	
							12				
							18				
							40				
							24	-2.7 (13.5)			
							16			Gray-brown, wet, loose, silty SAND with organics, organic odor, trace shells, trace brick fragments -HARBOR BOTTOM DEPOSIT-(SM)	
15	4D	24/10	15.0 - 17.0	3/2/2/5	4	4	17				
							20	-5.7 (16.5)		Gray-brown, wet, medium stiff, mottled, silty CLAY with black organic pockets -MARINE DEPOSIT-(CL)	
							23				
							37				
							55				
20	5D	24/20	20.0 - 22.0	3/2/3/2	5	5	37			Brown-gray, wet, medium stiff, mottled silty CLAY with frequent fine sand seams and layers -MARINE DEPOSIT-(CL)	WC=31.9%
							36				
							35				
							34				
							26				
25											

Remarks:
1. As-drilled coordinates of test borings determined by MaineDOT and provided in NAD 83 Maine 2000 West Zone coordinate system.
2. Hammer consisted of rope and cathead and safety hammer.

Stratification lines represent approximate boundaries between soil types; transitions may be gradual.

* Water level readings have been made at times and under conditions stated. Groundwater fluctuations may occur due to conditions other than those present at the time measurements were made.

Page 1 of 2
Boring No.: BB-YSL-101

Maine Department of Transportation

Soil/Rock Exploration Log
US CUSTOMARY UNITS

Project: Sewall's Bridge Replacement
Location: York, Maine

Boring No.: BB-YSL-101
PIN: 12665.00

Driller:	Maine Test Borings	Elevation (ft.): 10.8	Auger ID/OD: -
Operator:	B. Enos	Datum: NAVD 88	Sampler: Split Spoon-1.375 in. in
Logged By:	M. Snow	Rig Type: Mobile B53 Truck	Hammer Wt./Fall: 140/30-SS, 300/16-NW
Date Start/Finish:	11/12/09-11/12/09	Drilling Method: SSA to 5', NW to 35'	Core Barrel: NQ-2.0
Boring Location:	See Plan (N110629.6, E908043.6)	Casing ID/OD: NW 3.0	Water Level*: Tidal
Hammer Efficiency Factor: 0.6		Hammer Type: Automatic ☐ Hydraulic ☐ Rope & Cathead ☒	

Definitions:
D = Split Spoon Sample
MD = Unsuccessful Split Spoon Sample attempt
U = Thin Wall Tube Sample
MU = Unsuccessful Thin Wall Tube Sample attempt
V = Insitu Vane Shear Test
MV = Unsuccessful Insitu Vane Shear Test attempt
R = Rock Core Sample
SSA = Solid Stem Auger
HSA = Hollow Stem Auger
RC = Roller Cone
WOH = weight of 140lb. hammer
WOR = weight of rods
WOIP = weight of one person
S_u = Insitu Field Vane Shear Strength (psf)
T_v = Pocket Torvane Shear Strength (psf)
q_p = Unconfined Compressive Strength (ksf)
N-uncorrected = Raw field SPT N-value
Hammer Efficiency Factor = Annual Calibration Value
N_{60} = SPT N-uncorrected corrected for hammer efficiency
N_{60} = (Hammer Efficiency Factor/60%)*N-uncorrected
$S_{u(lab)}$ = Lab Vane Shear Strength (psf)
WC = water content, percent
LL = Liquid Limit
PL = Plastic Limit
PI = Plasticity Index
G = Grain Size Analysis
C = Consolidation Test

Depth (ft.)	Sample No.	Pen./Rec. (in.)	Sample Depth (ft.)	Blows (/6 in. Shear Strength (psf) or RQD (%))	N-uncorrected	N60	Casing Blows	Elevation (ft.)	Graphic Log	Visual Description and Remarks	Laboratory Testing Results/ AASHTO and Unified Class
25	6D	24/24	25.0 - 27.0	1/WOR/WOR/WOIP			30			Gray, wet, very soft, silty CLAY, with frequent fine sand seams -MARINE DEPOSIT-(CL) Note: Attempted vane shear test at 27.0 ft. Unable to push vane to full depth of test due to probable sand layer.	WC=32.4% L.L.=35, PL=18 PI=17
							37				
							20				
							26				
							22			Note: Sand and gravel observed in wash water at 29.0 ft.	
30	7D	24/5	30.0 - 32.0	1/1/1/1	2	2	31			Gray, wet, soft, silty CLAY, one gravel piece -MARINE DEPOSIT-(CL)	WC=38.3%
							25				
							25				
							22				
							25				
35	MD/R1	23/23	35.0 - 36.9	50(0") RQD = 39%				(24.2)		Top of Bedrock at El -24.2 R1: Gray, aphanitic, fine-grained METASILTSTONE, hard, fresh, joints dipping at horizontal to moderate angles, occasionaal steeply dipping joints, very close to closely spaced, tight to open, one infilled joint with gray silty fine sand coating, slight oxidation on some joint surfaces. Rock Mass Quality=Poor -KITTERY FORMATION- R1 Core Times (min:sec): 35.0-36.0'(4:00), 36.0-36.9'(3:00) R2: Gray, aphanitic, fine-grained METASILTSTONE, hard, fresh, joints dipping at moderate to steep angles, very close to moderately close, occasionsl calcite coatings on some joint surfaces, one healed, near vertical secondary joint from approximately 39.8 to 41.0 ft infilled with quartz/calcite. Rock Mass Quality=Good -KITTERY FORMATION- R2 Core Times (min:sec): 36.9-37.9'(3:00), 37.9-38.9'(3:00), 38.9-39.9'(4:00), 39.9-40.9'(4:00) R3: Gray, aphanitic, METASILTSTONE, hard, fresh, joints dipping at low to steep angles, very close to moderately close, occasional oxidation and/or calcite coatings on some joint surfaces. Highly fractured, slightly weathered zone from approximately 45.9 to 46.3 ft Rock Mass Quality=Fair -KITTERY FORMATION- R3 Core Times (min:sec): 41.3-42.3'(4:00), 42.3-44.3'(4:00), 44.3-45.3'(4:00), 45.3-46.3'(4:00)	UC=9592 qp=48,338 psi
	R2	53/53	36.9 - 41.3	RQD = 77%							
40											
	R3	60/60	41.3 - 46.3	RQD = 60%							
45								(35.5)			
50										Bottom of Exploration 46.3 feet below ground surface. (46.3)	

Remarks:
1. As-drilled coordinates of test borings determined by MaineDOT and provided in NAD 83 Maine 2000 West Zone coordinate system.
2. Hammer consisted of rope and cathead and safety hammer.

Stratification lines represent approximate boundaries between soil types; transitions may be gradual.

* Water level readings have been made at times and under conditions stated. Groundwater fluctuations may occur due to conditions other than those present at the time measurements were made.

Page 2 of 2
Boring No.: BB-YSL-101

NOTE
1. Boring Logs provided by Haley and Aldrich.

STATE OF MAINE
DEPARTMENT OF TRANSPORTATION

BR-1266(500)X

WIN 12665.00

BRIDGE NO. 3096

BRIDGE PLANS

STATE OF MAINE — Steven M. Hodgdon — LICENSED PROFESSIONAL ENGINEER

PROJ. MANAGER	N. BENOIT	BY	DATE
DESIGN-DETAILED	LSG	KDW	2/12
CHECKED-REVIEWED	SMH	LSG	2/12
DESIGN2-DETAILED2	---	---	---
DESIGN3-DETAILED3	---	---	---
REVISIONS 1	---	---	---
REVISIONS 2	---	---	---
REVISIONS 3	---	---	---
REVISIONS 4	---	---	---
FIELD CHANGES	---	---	---

11206
P.E. NUMBER
2/15/2012
DATE

SEWALL'S BRIDGE
YORK RIVER
YORK COUNTY
YORK

BORING LOGS (1 OF 9)

SHEET NUMBER
15
OF 50

Filename: ...\st\planset\015_boring_01.dgn Division: Structures Username: kwentworth Date:2/15/2012

Filename: ...\st\planset\016_boring_02.dgn Division: Structures Username: kwentworth Date:2/15/2012

Maine Department of Transportation

Soil/Rock Exploration Log
US CUSTOMARY UNITS

Project: Sewall's Bridge Replacement
Location: York, Maine

Boring No.: BB-YSL-102
PIN: 12665.00

Driller:	Maine Test Borings	Elevation (ft.): ~17.1	Auger ID/OD: -
Operator:	B. Enos	Datum: NAVD 88	Sampler: Split Spoon-1.375 in. in
Logged By:	B. Babcock	Rig Type: CME 45 Barge	Hammer Wt./Fall: 140/30-SS, 300/16-NW
Date Start/Finish:	12/10/09-12/10/09	Drilling Method: SSA to 5', NW to 39.8'	Core Barrel: NQ-2.0
Boring Location:	See Plan (N110566.4, E907983.2)	Casing ID/OD: NW 3.0	Water Level*: Tidal
Hammer Efficiency Factor: 0.6		Hammer Type: Automatic ☐ Hydraulic ☐ Rope & Cathead ☒	

Definitions:
D = Split Spoon Sample
MD = Unsuccessful Split Spoon Sample attempt
U = Thin Wall Tube Sample
MU = Unsuccessful Thin Wall Tube Sample attempt
V = Insitu Vane Shear Test
MV = Unsuccessful Insitu Vane Shear Test attempt
R = Rock Core Sample
SSA = Solid Stem Auger
HSA = Hollow Stem Auger
RC = Roller Cone
WOH = weight of 140lb. hammer
WOR = weight of rods
WOP = weight of one person
S_u = Insitu Field Vane Shear Strength (psf)
T_v = Pocket Torvane Shear Strength (psf)
q_p = Unconfined Compressive Strength (ksf)
N-uncorrected = Raw field SPT N-value
Hammer Efficiency Factor = Annual Calibration Value
N_{60} = SPT N-uncorrected corrected for hammer efficiency
N_{60} = (Hammer Efficiency Factor/60%)*N-uncorrected
$S_{u(lab)}$ = Lab Vane Shear Strength (psf)
WC = water content, percent
LL = Liquid Limit
PL = Plastic Limit
PI = Plasticity Index
G = Grain Size Analysis
C = Consolidation Test

Sample Information

Depth (ft.)	Sample No.	Pen./Rec. (in.)	Sample Depth (ft.)	Blows (/6 in. Shear Strength (psf) or RQD (%))	N-uncorrected	N_{60}	Casing Blows	Elevation (ft.)	Visual Description and Remarks	Laboratory Testing Results/ AASHTO and Unified Class
0	1D	24/4	0.0 - 2.0	3/3/4/5	7	7	SSA		Gray with dark-gray, wet, medium stiff, CLAY, little organic silt, trace fine gravel and medium sand, little fine sand, shell fragments throughout, organic odor -HARBOR BOTTOM DEPOSIT-(CL)	G#172171 A-4, CL WC=30.3%
								-20.6	3.5	
5	2D	24/6	5.0 - 7.0	3/2/3/3	5	5	6		Gray, wet, medium stiff, CLAY, trace silt -MARINE DEPOSIT-(CL)	WC=37.4%
							6			
							8			
							9			
							13			
10	MD		10.0 - 12.0	4/1/1/4	2	2	6		No Recovery, spoon and casing action indicate presence of sand/gravel layers, probable that sampler pushed on gravel.	
							15			
								-30.1	13.0	
							18		Note: Wash water changed to brown at 13.8 ft.	
							16			
15	3D	24/12	15.0 - 17.0	4/4/6/8	10	10	16		Brown, wet, loose, coarse to fine SAND, trace silt, trace coarse gravel -MARINE DEPOSIT-(SM/ML)	
							24			
							23			
							31			
							37			
20	4D	24/16	20.0 - 22.0	4/18/19/24	37	37	48	-37.1	20.0	
							52		Brown, wet, dense, fine SAND, some silt -MARINE DEPOSIT-(SM/ML)	
							95			
							98			
25							113			

Remarks:
1. As-drilled coordinates of test borings determined by MaineDOT and provided in NAD 83 Maine 2000 West Zone coordinate system.
2. Hammer consisted of rope and cathead and safety hammer.

Stratification lines represent approximate boundaries between soil types; transitions may be gradual.
* Water level readings have been made at times and under conditions stated. Groundwater fluctuations may occur due to conditions other than those present at the time measurements were made.

Page 1 of 2
Boring No.: BB-YSL-102

Maine Department of Transportation

Soil/Rock Exploration Log
US CUSTOMARY UNITS

Project: Sewall's Bridge Replacement
Location: York, Maine

Boring No.: BB-YSL-102
PIN: 12665.00

Driller:	Maine Test Borings	Elevation (ft.): ~17.1	Auger ID/OD: -
Operator:	B. Enos	Datum: NAVD 88	Sampler: Split Spoon-1.375 in. in
Logged By:	B. Babcock	Rig Type: CME 45 Barge	Hammer Wt./Fall: 140/30-SS, 300/16-NW
Date Start/Finish:	12/10/09-12/10/09	Drilling Method: SSA to 5', NW to 39.8'	Core Barrel: NQ-2.0
Boring Location:	See Plan (N110566.4, E907983.2)	Casing ID/OD: NW 3.0	Water Level*: Tidal
Hammer Efficiency Factor: 0.6		Hammer Type: Automatic ☐ Hydraulic ☐ Rope & Cathead ☒	

Definitions:
D = Split Spoon Sample
MD = Unsuccessful Split Spoon Sample attempt
U = Thin Wall Tube Sample
MU = Unsuccessful Thin Wall Tube Sample attempt
V = Insitu Vane Shear Test
MV = Unsuccessful Insitu Vane Shear Test attempt
R = Rock Core Sample
SSA = Solid Stem Auger
HSA = Hollow Stem Auger
RC = Roller Cone
WOH = weight of 140lb. hammer
WOR = weight of rods
WOP = weight of one person
S_u = Insitu Field Vane Shear Strength (psf)
T_v = Pocket Torvane Shear Strength (psf)
q_p = Unconfined Compressive Strength (ksf)
N-uncorrected = Raw field SPT N-value
Hammer Efficiency Factor = Annual Calibration Value
N_{60} = SPT N-uncorrected corrected for hammer efficiency
N_{60} = (Hammer Efficiency Factor/60%)*N-uncorrected
$S_{u(lab)}$ = Lab Vane Shear Strength (psf)
WC = water content, percent
LL = Liquid Limit
PL = Plastic Limit
PI = Plasticity Index
G = Grain Size Analysis
C = Consolidation Test

Sample Information

Depth (ft.)	Sample No.	Pen./Rec. (in.)	Sample Depth (ft.)	Blows (/6 in. Shear Strength (psf) or RQD (%))	N-uncorrected	N_{60}	Casing Blows	Elevation (ft.)	Visual Description and Remarks	Laboratory Testing Results/ AASHTO and Unified Class
25	5D	24/16	25.0 - 27.0	16/20/15/13	35	35	67		Brown, wet, dense, fine SAND, some silt -MARINE DEPOSIT-(SM)	G#172176 A-2-4, SM
							72			
							104			
							123	-45.6	-28.5	
							144			
30	6D	24/12	30.0 - 32.0	WOH/6/9/9	15	15	19		Gray, wet, medium dense, fine SAND, trace medium sand, little silt -MARINE DEPOSIT-(SM)	G#172177 A-2-4, SM
							24			
							31			
							41			
							42			
35	7D	24/10	35.0 - 37.0	17/15/13/13	28	28	24		Gray, wet, medium dense, medium to fine SAND, trace silt, trace fine gravel (SW-SM)	
							20			
							61			
							126			
							150*			
40	R1	60/60	40.4 - 45.4	RQD = 19%				-57.5	40.4	
									Top of Bedrock at El -57.5 R1: Gray, aphanitic, METASILTSTONE. Moderately hard, moderately to slightly weathered. Primary joints dipping at moderate angles, close, open to healed, smooth to rough, planar to stepped, slightly to moderately weathered with calcification and silt infilling present on some joint surfaces. Secondary joints dipping at vertical angles, close, open to healed, rough, undulating, slightly to moderately weathered, with calcification present. Rock Mass Quality:Very Poor -WITTERY FORMATION- R1 Core Times (min:sec): 40.4-41.4'(4:00), 41.4-42.4'(4:00), 42.4-43.4'(4:00), 43.4-44.4'(5:00), 44.4-45.4'(5:00)	
45								-62.5	45.4	
									Bottom of Exploration 45.4 feet below ground surface	
50										

Remarks:
1. As-drilled coordinates of test borings determined by MaineDOT and provided in NAD 83 Maine 2000 West Zone coordinate system.
2. Hammer consisted of rope and cathead and safety hammer.

Stratification lines represent approximate boundaries between soil types; transitions may be gradual.
* Water level readings have been made at times and under conditions stated. Groundwater fluctuations may occur due to conditions other than those present at the time measurements were made.

Page 2 of 2
Boring No.: BB-YSL-102

NOTE
1. Boring Logs provided by Haley and Aldrich.

STATE OF MAINE
DEPARTMENT OF TRANSPORTATION

BR-1266(500)X

WIN 12665.00

BRIDGE NO. 3096

BRIDGE PLANS

STATE OF MAINE
Steven M. Hodgdon
No. 11206
LICENSED
PROFESSIONAL ENGINEER

		BY	DATE
PROJ. MANAGER	N. BENOIT		
DESIGN-DETAILED	LSG	KDW	2/12
CHECKED-REVIEWED	SMH	LSG	2/12
DESIGN2-DETAILED2	---	---	---
DESIGN3-DETAILED3	---	---	---
REVISIONS 1	---	---	---
REVISIONS 2	---	---	---
REVISIONS 3	---	---	---
REVISIONS 4	---	---	---
FIELD CHANGES	---	---	---

Steven M. Hodgdon
SIGNATURE
11206
P.E. NUMBER
2/15/2012
DATE

SEWALL'S BRIDGE
YORK RIVER
YORK COUNTY
YORK

BORING LOGS (2 OF 9)

SHEET NUMBER
16
OF 50

Filename: ...\st\planset\017_boring_03.dgn

Division: Structures

Username: kwentworth

Date:2/15/2012

Maine Department of Transportation
Soil/Rock Exploration Log
US CUSTOMARY UNITS

Project: Sewall's Bridge Replacement
Location: York, Maine
Boring No.: BB-YSL-103
PIN: 12665.00

Driller: Maine Test Borings	Elevation (ft.) -12.6	Auger ID/OD: -	
Operator: B. Enos	Datum: NAVD 88	Sampler: Split Spoon-1.375 in. ID	
Logged By: B. Babcock	Rig Type: CME 45 Barge	Hammer Wt./Fall: 140/30-SS, 300/16-NW	
Date Start/Finish: 12/07/09-12/08/09	Drilling Method: SSA to 5', NW to 61.8'	Core Barrel: NQ-2.0	
Boring Location: See Plan (N110526.7, E907984.1)	Casing ID/OD: NW 3.0	Water Level*: Tidal	
Hammer Efficiency Factor: 0.6	Hammer Type: Automatic ☐ Hydraulic ☐ Rope & Cathead ☒		

Definitions:
D = Split Spoon Sample
MD = Unsuccessful Split Spoon Sample attempt
U = Thin Wall Tube Sample
MU = Unsuccessful Thin Wall Tube Sample attempt
V = Insitu Vane Shear Test
MV = Unsuccessful Insitu Vane Shear Test attempt
R = Rock Core Sample
SSA = Solid Stem Auger
HSA = Hollow Stem Auger
RC = Roller Cone
WOH = weight of 140lb. hammer
WOR = weight of rods
WO1P = Weight of one person
S_u = Insitu Field Vane Shear Strength (psf)
T_v = Pocket Torvane Shear Strength (psf)
q_p = Unconfined Compressive Strength (ksf)
N-uncorrected = Raw field SPT N-value
Hammer Efficiency Factor = Annual Calibration Value
N_{60} = SPT N-uncorrected corrected for hammer efficiency
N_{60} = (Hammer Efficiency Factor/60%)*N-uncorrected
$S_{u(lab)}$ = Lab Vane Shear Strength (psf)
WC = water content, percent
LL = Liquid Limit
PL = Plastic Limit
PI = Plasticity Index
G = Grain Size Analysis
C = Consolidation Test

Depth (ft.)	Sample No.	Pen./Rec. (in.)	Sample Depth (ft.)	Blows (/6 in.) Shear Strength (psf) or RQD (%)	N-uncorrected	N60	Casing Blows	Elevation (ft.)	Visual Description and Remarks	Laboratory Testing Results/ AASHTO and Unified Class.
0	1D	24/1	0.0 - 2.0	WOR/WOR/WOR/WOR			SSA		Dark gray, wet, very soft, ORGANIC SILT, trace fine sand, strong organic odor, shell fragments throughout -HARBOR BOTTOM DEPOSIT-(OL-OH)	
5	2D	24/8	5.0 - 7.0	WO1P/WO1P/WO1P/5					Dark gray, wet, very loose, silty fine SAND, trace medium to coarse sand, trace gravel, strong organic odor, shell fragments throughout -HARBOR BOTTOM DEPOSIT-(SC)	
							3			G#172172 A-4, SC WC=47.1% LL=30, PL=22 PI=8
							4			
							4			
10	3D	24/14	10.0 - 12.0	WOH/WOH/WOH/1			5		Gray to gray-brown, wet, very loose, silty fine SAND, some organic clay, trace medium to coarse sand, trace gravel, shell fragments in top 4 in. of recovery. Wood and plant fibers in bottom 10 in., organic odor -HARBOR BOTTOM DEPOSIT-(SC)	
							6			
							6			
							13			
							25	-26.6	14.0 Note: Drill action indicates stratum change at 14.0 ft.	
15	4D	24/4	15.0 - 17.0	18/13/7/4	20	20	22		Gray, wet, medium dense, coarse to fine SAND, trace silt, trace fine gravel -MARINE DEPOSIT-(SW-SM)	
							21			
							24			
							35			
							39			
20	5D	24/8	20.0 - 22.0	9/4/7/13	11	11	28	-32.6	20.0 Gray, wet, stiff, SILT, little fine sand -MARINE DEPOSIT-(ML)	G#172178 A-4, ML
							34			
							46			
							67			
							78			
25										

Remarks:

1. As-drilled coordinates of test borings determined by MaineDOT and provided in NAD 83 Maine 2000 West Zone coordinate system.
2. Hammer consisted of rope and cathead and safety hammer.

Stratification lines represent approximate boundaries between soil types; transitions may be gradual.

* Water level readings have been made at times and under conditions stated. Groundwater fluctuations may occur due to conditions other than those present at the time measurements were made.

Page 1 of 3
Boring No.: BB-YSL-103

Maine Department of Transportation
Soil/Rock Exploration Log
US CUSTOMARY UNITS
Project: Sewall's Bridge Replacement
Location: York, Maine
Boring No.: BB-YSL-103
PIN: 12665.00
Driller: Maine Test Borings | Elevation (ft.) -12.6 | Auger ID/OD: -
Operator: B. Enos | Datum: NAVD 88 | Sampler: Split Spoon-1.375 in. ID
Logged By: B. Babcock | Rig Type: CME 45 Barge | Hammer Wt./Fall: 140/30-SS, 300/16-NW
Date Start/Finish: 12/07/09-12/08/09 | Drilling Method: SSA to 5', NW to 61.8' | Core Barrel: NQ-2.0
Boring Location: See Plan (N110526.7, E907984.1) | Casing ID/OD: NW 3.0 | Water Level*: Tidal
Hammer Efficiency Factor: 0.6 | Hammer Type: Automatic ☐ Hydraulic ☐ Rope & Cathead ☒

Depth (ft.)	Sample No.	Pen./Rec. (in.)	Sample Depth (ft.)	Blows (/6 in.) Shear Strength (psf) or RQD (%)	N-uncorrected	N60	Casing Blows	Elevation (ft.)	Visual Description and Remarks	Laboratory Testing Results/ AASHTO and Unified Class.
25	6D	24/12	25.0 - 27.0	5/15/18/19	33	33	43	-37.6	25.0 Gray, wet, dense, fine SAND, little silt -MARINE DEPOSIT-(SM)	G#172179 A-2-4, SM
							64			
							104			
							182			
							163			
30	7D	24/16	30.0 - 32.0	17/30/37/36	67	67	164		Gray, wet, very dense, fine SAND, little silt -MARINE DEPOSIT-(SM)	
							203			
							234			
							268			
							301			
35	8D	24/14	35.0 - 37.0	8/15/19/22	34	34	180		Gray, wet, dense, fine SAND, little silt -MARINE DEPOSIT-(SM)	
							244			
							293		Note: Washed ahead to 40.0 ft, then drove casing.	
							350			
							180			
40	9D	24/16	40.0 - 42.0	4/13/18/22	31	31	107		Gray, wet, dense, fine SAND, little silt -MARINE DEPOSIT-(SM)	
							115			
							90			
							58	-56.1	43.5	
							67			
45	10D	24/18	45.0 - 47.0	4/8/19/34	27	27	100		Gray, wet, medium dense, silty fine SAND, trace medium to coarse sand, little gravel, occasional pockets of medium sand and fine gravel, occasional weak bonding -GLACIAL TILL-(SC) Note: Washed ahead of casing to 50.0 ft.	G#172180 A-4, SC
							107			
							142			
							150			
							246			
50										

Remarks:
1. As-drilled coordinates of test borings determined by MaineDOT and provided in NAD 83 Maine 2000 West Zone coordinate system.
2. Hammer consisted of rope and cathead and safety hammer.
Stratification lines represent approximate boundaries between soil types; transitions may be gradual.
* Water level readings have been made at times and under conditions stated. Groundwater fluctuations may occur due to conditions other than those present at the time measurements were made.

Page 2 of 3
Boring No.: BB-YSL-103

Maine Department of Transportation
Soil/Rock Exploration Log
US CUSTOMARY UNITS
Project: Sewall's Bridge Replacement
Location: York, Maine
Boring No.: BB-YSL-103
PIN: 12665.00
Driller: Maine Test Borings | Elevation (ft.) -12.6 | Auger ID/OD: -
Operator: B. Enos | Datum: NAVD 88 | Sampler: Split Spoon-1.375 in. ID
Logged By: B. Babcock | Rig Type: CME 45 Barge | Hammer Wt./Fall: 140/30-SS, 300/16-NW
Date Start/Finish: 12/07/09-12/08/09 | Drilling Method: SSA to 5', NW to 61.8' | Core Barrel: NQ-2.0
Boring Location: See Plan (N110526.7, E907984.1) | Casing ID/OD: NW 3.0 | Water Level*: Tidal
Hammer Efficiency Factor: 0.6 | Hammer Type: Automatic ☐ Hydraulic ☐ Rope & Cathead ☒

Depth (ft.)	Sample No.	Pen./Rec. (in.)	Sample Depth (ft.)	Blows (/6 in.) Shear Strength (psf) or RQD (%)	N-uncorrected	N60	Casing Blows	Elevation (ft.)	Visual Description and Remarks	Laboratory Testing Results/ AASHTO and Unified Class.
50	11D	10/6	50.0 - 50.8	84/100(4")			43		Gray, wet, very dense, fine SAND, little medium to coarse sand, little coarse to fine gravel, some silt, bonded -GLACIAL TILL-(SM)	G#172181 A-2-4, SM
							34		Note: Washed ahead of casing to 55.0 ft.	
							44			
							49			
							164			
55	12D	10/8	55.0 - 55.8	90/100(4")			36		Gray, wet, very dense, coarse to fine SAND, little silt, little coarse to fine gravel, occasional bonding and stratification -GLACIAL TILL-(SW-SM)	
							44			
							52		Note: Washed ahead of casing to 60.0 ft.	
							60	-71.1	58.5 -COBBLES/GRAVEL-	
							42	-72.3	59.7	
60	13D	11/6	60.0 - 60.9	70/100(5")			36		Gray, wet, very dense, coarse to fine SAND, little silt, little coarse to fine gravel, bonded -GLACIAL TILL-(SW-SM)	
	R1	54/54	61.9 - 66.4	RQD = 59%			245/(6")	-74.1	61.5 Top of Bedrock at El.-74.1 R1: Gray, aphanitic, QUARTZITE. Moderately hard, slightly to moderately weathered. Primary joints dipping at moderate to steep angles, very close to close, open to healed, smooth to rough, planar to stepped, slightly to moderately weathered with silt infilling and occasional calcification of joint surfaces. Secondary joints dipping at low to horizontal angles, wide, open, rough, stepped, slightly weathered. Rock Mass Quality=Fair -KITTERY FORMATION- R1 Core Times (min:sec): 61.9-62.9'(4:00), 62.9-63.9'(3:00), 63.9-64.9'(3:00), 64.9-65.9'(3:00), 65.9-66.4'(2:00)	
65										
	R2	57/57	66.4 - 71.2	RQD = 84%					R2: Gray, aphanitic, QUARTZITE. Hard to moderately hard, slightly weathered. Primary joints dipping at steep angles, close, open to healed, rough, planar to undulating, slightly weathered with calcification present on joint surfaces. Secondary joints wide, open, rough, stepped, slightly weathered. Rock Mass Quality=Good -KITTERY FORMATION- R2 Core Times (min:sec): 66.4-67.4'(3:00), 67.4-68.4'(3:00), 68.4-69.4'(3:00), 69.4-70.4'(4:00), 70.4-71.2'(5:00)	
70										
								-83.8	71.2 Bottom of Exploration 71.2 feet below ground surface.	
75										

Remarks:
1. As-drilled coordinates of test borings determined by MaineDOT and provided in NAD 83 Maine 2000 West Zone coordinate system.
2. Hammer consisted of rope and cathead and safety hammer.
Stratification lines represent approximate boundaries between soil types; transitions may be gradual.
* Water level readings have been made at times and under conditions stated. Groundwater fluctuations may occur due to conditions other than those present at the time measurements were made.

Page 3 of 3
Boring No.: BB-YSL-103

NOTE
1. Boring Logs provided by Haley and Aldrich.

STATE OF MAINE
DEPARTMENT OF TRANSPORTATION
BR-1266(500)X
WIN 12665.00
BRIDGE NO. 3096
BRIDGE PLANS

STATE OF MAINE Steven M. Hodgdon 11206 LICENSED PROFESSIONAL ENGINEER

SIGNATURE
11206
P.E. NUMBER
2/15/2012
DATE

		BY	DATE
PROJ. MANAGER	N. BENOIT		
DESIGN-DETAILED	LSG	KDW	2/12
CHECKED-REVIEWED	SMH	LSG	2/12
DESIGN2-DETAILED2			
DESIGN3-DETAILED3			
REVISIONS 1			
REVISIONS 2			
REVISIONS 3			
REVISIONS 4			
FIELD CHANGES			

SEWALL'S BRIDGE
YORK RIVER
YORK
YORK COUNTY

BORING LOGS (3 OF 9)

SHEET NUMBER
17
OF 50

Filename: ...\st\planset\018_boring_04.dgn Division: Structures Username: kwentworth Date:2/15/2012

Maine Department of Transportation

Soil/Rock Exploration Log
US CUSTOMARY UNITS

Project: Sewall's Bridge Replacement
Location: York, Maine

Boring No.: BB-YSL-104
PIN: 12665.00

Driller:	Maine Test Borings	Elevation (ft.): ~15.7	Auger ID/OD: -
Operator:	B. Enos	Datum: NAVD 88	Sampler: Split Spoon-1.375 in. in
Logged By:	B. Babcock	Rig Type: CME 45 Barge	Hammer Wt./Fall: 140/30-SS, 300/16-NW
Date Start/Finish:	12/4/09-12/4/09	Drilling Method: SSA to 10', NW to 39.7'	Core Barrel: NQ-2.0
Boring Location:	See Plan (N110484.1, E907966.5)	Casing ID/OD: NW 3.0	Water Level*: Tidal
Hammer Efficiency Factor: 0.6		Hammer Type: Automatic ☐ Hydraulic ☐ Rope & Cathead ☒	

Definitions:
D = Split Spoon Sample
MD = Unsuccessful Split Spoon Sample attempt
U = Thin Wall Tube Sample
MU = Unsuccessful Thin Wall Tube Sample attempt
V = Insitu Vane Shear Test
MV = Unsuccessful Insitu Vane Shear Test attempt
R = Rock Core Sample
SSA = Solid Stem Auger
HSA = Hollow Stem Auger
RC = Roller Cone
WOH = weight of 140lb. hammer
WOR = weight of rods
WOP = weight of one person
S_u = Insitu Field Vane Shear Strength (psf)
T_v = Pocket Torvane Shear Strength (psf)
q_p = Unconfined Compressive Strength (ksf)
N-uncorrected = Raw field SPT N-value
Hammer Efficiency Factor = Annual Calibration Value
N_{60} = SPT N-uncorrected corrected for hammer efficiency
N_{60} = (Hammer Efficiency Factor/60%)*N-uncorrected
$S_{u(lab)}$ = Lab Vane Shear Strength (psf)
WC = water content, percent
LL = Liquid Limit
PL = Plastic Limit
PI = Plasticity Index
G = Grain Size Analysis
C = Consolidation Test

Sample Information

Depth (ft.)	Sample No.	Pen./Rec. (in.)	Sample Depth (ft.)	Blows (/6 in. Shear Strength (psf) or RQD (%))	N-uncorrected	N60	Casing Blows	Elevation (ft.)	Visual Description and Remarks	Laboratory Testing Results/ AASHTO and Unified Class
0	MD		0.0 - 2.0	WOR/WOR/WOR/WOH			SSA		No Recovery	
	1D	24/2	2.0 - 4.0	WOIP/WOIP/WOIP/WOIP					Dark gray, wet, very soft, organic SILT, little medium to fine sand, shells throughout, organic odor -HARBOR BOTTOM DEPOSIT-(OL-OH)	
5	2D	24/8	5.0 - 7.0	16/14/5/3	19	19			Dark gray to gray, wet, very stiff, SILT, little fine sand, trace medium to coarse sand, shells throughout, organic odor -HARBOR BOTTOM DEPOSIT-(ML)	G#172173 A-4, ML, WC=27.3% NP
10	3D	24/20	10.0 - 12.0	WOR/WOR/WOIP/WOIP			3		Gray, wet, very soft, organic SILT, little fine sand, trace medium to coarse sand, wood fragments and plant fibers throughout top 16 in. of recovery, slight organic odor -HARBOR BOTTOM DEPOSIT-(ML)	
							3			
							6	-28.7		13.0
							42			
							37			
15	4D	24/6	15.0 - 17.0	22/7/2/2	9	9	8		Gray, wet, loose, coarse to fine SAND, some fine gravel, little silt, grading from coarse to fine -MARINE DEPOSIT-(SM)	G#172182 A-1-b, SM
							6			
							11	-33.7		18.0
							25			
							29			
20	5D	24/4	20.0 - 22.0	WOH/6/17/25	23	23	19		Gray, wet, medium dense, fine SAND, some silt, little medium sand, trace coarse sand, trace coarse gravel, piece of gravel lodged in tip of spoon -MARINE DEPOSIT-(SM)	
							40			
							59			
							64			
25							99			

Remarks:
1. As-drilled coordinates of test borings determined by MaineDOT and provided in NAD 83 Maine 2000 West Zone coordinate system.
2. Hammer consisted of rope and cathead and safety hammer.
3. NP=non plastic determined from Atterberg limits laboratory test.

Stratification lines represent approximate boundaries between soil types; transitions may be gradual.

* Water level readings have been made at times and under conditions stated. Groundwater fluctuations may occur due to conditions other than those present at the time measurements were made.

Page 1 of 2
Boring No.: BB-YSL-104

Maine Department of Transportation

Soil/Rock Exploration Log
US CUSTOMARY UNITS

Project: Sewall's Bridge Replacement
Location: York, Maine

Boring No.: BB-YSL-104
PIN: 12665.00

Driller:	Maine Test Borings	Elevation (ft.): ~15.7	Auger ID/OD: -
Operator:	B. Enos	Datum: NAVD 88	Sampler: Split Spoon-1.375 in. in
Logged By:	B. Babcock	Rig Type: CME 45 Barge	Hammer Wt./Fall: 140/30-SS, 300/16-NW
Date Start/Finish:	12/4/09-12/4/09	Drilling Method: SSA to 10', NW to 39.7'	Core Barrel: NQ-2.0
Boring Location:	See Plan (N110484.1, E907966.5)	Casing ID/OD: NW 3.0	Water Level*: Tidal
Hammer Efficiency Factor: 0.6		Hammer Type: Automatic ☐ Hydraulic ☐ Rope & Cathead ☒	

Definitions:
D = Split Spoon Sample
MD = Unsuccessful Split Spoon Sample attempt
U = Thin Wall Tube Sample
MU = Unsuccessful Thin Wall Tube Sample attempt
V = Insitu Vane Shear Test
MV = Unsuccessful Insitu Vane Shear Test attempt
R = Rock Core Sample
SSA = Solid Stem Auger
HSA = Hollow Stem Auger
RC = Roller Cone
WOH = weight of 140lb. hammer
WOR = weight of rods
WOP = weight of one person
S_u = Insitu Field Vane Shear Strength (psf)
T_v = Pocket Torvane Shear Strength (psf)
q_p = Unconfined Compressive Strength (ksf)
N-uncorrected = Raw field SPT N-value
Hammer Efficiency Factor = Annual Calibration Value
N_{60} = SPT N-uncorrected corrected for hammer efficiency
N_{60} = (Hammer Efficiency Factor/60%)*N-uncorrected
$S_{u(lab)}$ = Lab Vane Shear Strength (psf)
WC = water content, percent
LL = Liquid Limit
PL = Plastic Limit
PI = Plasticity Index
G = Grain Size Analysis
C = Consolidation Test

Sample Information

Depth (ft.)	Sample No.	Pen./Rec. (in.)	Sample Depth (ft.)	Blows (/6 in. Shear Strength (psf) or RQD (%))	N-uncorrected	N60	Casing Blows	Elevation (ft.)	Visual Description and Remarks	Laboratory Testing Results/ AASHTO and Unified Class
25	6D	24/20	25.0 - 27.0	WOH/18/28/28	46	46	79		Gray, wet, dense, fine SAND, some silt -MARINE DEPOSIT-(SM)	G#172183 A-2-4, SM
							70			
							145			
							150			
							220			
30	7D	24/18	30.0 - 32.0	2/21/26/39	47	47	135		Gray, wet, dense, fine SAND, little silt -MARINE DEPOSIT-(SM)	
							180			
							250			
							300			
							320		Note: Low blow counts in top 6 in. of SD to 8D likely due to saturated loose sands beneath casing.	
35	8D	24/16	35.0 - 37.0	WOR/153/50/59	203	203	28			
							121			
							220			
							316	51.7		36.0
									Gray, wet, very dense, coarse to fine SAND, trace coarse to fine gravel, trace silt, weakly bonded in bottom 6 in. of recovery -GLACIAL TILL-(SW/SM)	
40	R1	60/60	39.8 - 44.8	RQD = 88%			325(7")	-55.4	Top of Bedrock at El.-55.4 R1: Gray, fine-grained to aphanitic QUARTZITE. Hard to moderately hard, very slightly weathered, steep angle joints, moderately close, open to healed, rough, undulating, discolored with calcite coating on joint surface. Rock Mass Quality=Good -KITTERY FORMATION- R1 Core Times (min:sec) 39.8-40.8'(3:00), 40.8-41.8'(3:00), 41.8-42.8'(3:00), 42.8-43.8'(3:00), 43.8-44.8'(4:00)	39.7
45								-60.5	Bottom of Exploration 44.8 feet below ground surface.	44.8
50										

Remarks:
1. As-drilled coordinates of test borings determined by MaineDOT and provided in NAD 83 Maine 2000 West Zone coordinate system.
2. Hammer consisted of rope and cathead and safety hammer.
3. NP=non plastic determined from Atterberg limits laboratory test.

Stratification lines represent approximate boundaries between soil types; transitions may be gradual.

* Water level readings have been made at times and under conditions stated. Groundwater fluctuations may occur due to conditions other than those present at the time measurements were made.

Page 2 of 2
Boring No.: BB-YSL-104

NOTE
1. Boring Logs provided by Haley and Aldrich.

STATE OF MAINE
DEPARTMENT OF TRANSPORTATION

BR-1266(500)X

WIN 12665.00

BRIDGE NO. 3096

BRIDGE PLANS

STATE OF MAINE
Steven M. Hampton
LICENSED
PROFESSIONAL ENGINEER

PROJ. MANAGER	N. BENOIT	BY	DATE
DESIGN-DETAILED	LSG	KDW	2\12
CHECKED-REVIEWED	SMH	LSG	2\12
DESIGN2-DETAILED2	---	---	---
DESIGN3-DETAILED3	---	---	---
REVISIONS 1	---	---	---
REVISIONS 2	---	---	---
REVISIONS 3	---	---	---
REVISIONS 4	---	---	---
FIELD CHANGES	---	---	---

SIGNATURE
11206
P.E. NUMBER
2/15/2012
DATE

SEWALL'S BRIDGE
YORK RIVER
YORK COUNTY
YORK

BORING LOGS (4 OF 9)

SHEET NUMBER
18
OF 50

Filename: ...\st\planset\019_boring_05.dgn Division: Structures Username: kwentworth Date:2/15/2012

Maine Department of Transportation

Soil/Rock Exploration Log
US CUSTOMARY UNITS

Project: Sewall's Bridge Replacement
Location: York, Maine

Boring No.: BB-YSL-105
PIN: 12665.00

Driller:	Maine Test Borings	Elevation (ft.): -14.2	Auger ID/OD: -
Operator:	B. Enos	Datum: NAVD 88	Sampler: Split Spoon-1.375 in. in
Logged By:	B. Babcock	Rig Type: CME 45 Barge	Hammer Wt./Fall: 140/30-SS, 300/16-NW
Date Start/Finish:	12/2/09-12/3/09	Drilling Method: SSA to 10', NW to 35.7'	Core Barrel: NQ-2.0
Boring Location:	See Plan (N110437.7, E907959.0)	Casing ID/OD: NW 3.0	Water Level*: Tidal
Hammer Efficiency Factor: 0.6		Hammer Type: Automatic ☐ Hydraulic ☐ Rope & Cathead ☒	

Definitions:
D = Split Spoon Sample
MD = Unsuccessful Split Spoon Sample attempt
U = Thin Wall Tube Sample
MU = Unsuccessful Thin Wall Tube Sample attempt
V = Insitu Vane Shear Test
MV = Unsuccessful Insitu Vane Shear Test attempt
R = Rock Core Sample
SSA = Solid Stem Auger
HSA = Hollow Stem Auger
RC = Roller Cone
WOH = weight of 140lb. hammer
WOR = weight of rods
WOIP = weight of one person
S_u = Insitu Field Vane Shear Strength (psf)
T_v = Pocket Torvane Shear Strength (psf)
q_p = Unconfined Compressive Strength (ksf)
N-uncorrected = Raw field SPT N-value
Hammer Efficiency Factor = Annual Calibration Value
N_{60} = SPT N-uncorrected corrected for hammer efficiency
N_{60} = (Hammer Efficiency Factor/60%)*N-uncorrected
$S_{u(lab)}$ = Lab Vane Shear Strength (psf)
WC = water content, percent
LL = Liquid Limit
PL = Plastic Limit
PI = Plasticity Index
G = Grain Size Analysis
C = Consolidation Test

Depth (ft.)	Sample No.	Pen./Rec. (in.)	Sample Depth (ft.)	Blows (/6 in. Shear Strength (psf) or RQD (%))	N-uncorrected	N60	Casing Blows	Elevation (ft.)	Visual Description and Remarks	Laboratory Testing Results/ AASHTO and Unified Class
0	MD		0.0 - 2.0	WOR/WOR/WOR/WOIP			SSA		No Recovery	
	1D	24/2	2.0 - 4.0	WOIP/WOH/WOH/WOH					Gray, wet, very soft, organic SILT, little fine sand, shell fragments throughout, organic odor -HARBOR BOTTOM DEPOSIT-(OL-OH)	
	2D	24/2	4.0 - 6.0	WOH/2/4/5	6	6			Dark gray, wet, medium stiff, organic SILT, little fine sand, trace medium sand, shell fragments throughout, organic odor (OL-OH)	
5	MD		6.0 - 8.0	5/7/3/3	10	10			No Recovery Residue on spoon similar to above	
	3D	24/10	8.7 - 10.7	1/WOH/1/1	1	1			Dark gray, wet, very soft, fine sandy organic SILT, trace fine gravel, little medium to coarse sand, shell fragments throughout, organic odor -HARBOR BOTTOM DEPOSIT-(OL-OH)	G#172174 A-4, OL-OH WC=34.0%
10							2			
							3	-25.2		-11.0
							30			
							36		Gray, wet, loose, coarse to fine SAND, some silt, trace gravel -MARINE DEPOSIT-(SM)	G#172184 A-2-4, SM WC=10.6%
15	4D	24/8	14.0 - 16.0	6/3/WOH/3	3	3	19			
							19			
							100(6")	-30.7		-16.5
							64	-31.7	Note: Advanced borehole from 16.5 to 17.5 ft through boulder with roller bit. -BOULDER-	
							43			-17.5
20	5D	24/12	19.0 - 21.0	10/18/18/15	36	36	67		Brown, wet, fine SAND, some silt -MARINE DEPOSIT-(SM)	G#172185 A-2-4, SM
							39			
							60		Note: Drill action indicates stratum change at 23.0 ft.	
							83			
							61	-37.2		-23.0
25	6D	24/8	24.0 - 26.0	18/21/22/19	43	43	120		Gray, wet, dense, coarse to fine SAND, little coarse to fine gravel, trace silt, moderately bonded -GLACIAL	

Remarks:
1. As-drilled coordinates of test borings determined by MaineDOT and provided in NAD 83 Maine 2000 West Zone coordinate system.
2. Hammer consisted of rope and cathead and safety hammer.

Stratification lines represent approximate boundaries between soil types; transitions may be gradual.

* Water level readings have been made at times and under conditions stated. Groundwater fluctuations may occur due to conditions other than those present at the time measurements were made.

Page 1 of 2
Boring No.: BB-YSL-105

Maine Department of Transportation

Soil/Rock Exploration Log
US CUSTOMARY UNITS

Project: Sewall's Bridge Replacement
Location: York, Maine

Boring No.: BB-YSL-105
PIN: 12665.00

Driller:	Maine Test Borings	Elevation (ft.): -14.2	Auger ID/OD: -
Operator:	B. Enos	Datum: NAVD 88	Sampler: Split Spoon-1.375 in. in
Logged By:	B. Babcock	Rig Type: CME 45 Barge	Hammer Wt./Fall: 140/30-SS, 300/16-NW
Date Start/Finish:	12/2/09-12/3/09	Drilling Method: SSA to 10', NW to 35.7'	Core Barrel: NQ-2.0
Boring Location:	See Plan (N110437.7, E907959.0)	Casing ID/OD: NW 3.0	Water Level*: Tidal
Hammer Efficiency Factor: 0.6		Hammer Type: Automatic ☐ Hydraulic ☐ Rope & Cathead ☒	

Definitions:
D = Split Spoon Sample
MD = Unsuccessful Split Spoon Sample attempt
U = Thin Wall Tube Sample
MU = Unsuccessful Thin Wall Tube Sample attempt
V = Insitu Vane Shear Test
MV = Unsuccessful Insitu Vane Shear Test attempt
R = Rock Core Sample
SSA = Solid Stem Auger
HSA = Hollow Stem Auger
RC = Roller Cone
WOH = weight of 140lb. hammer
WOR = weight of rods
WOIP = weight of one person
S_u = Insitu Field Vane Shear Strength (psf)
T_v = Pocket Torvane Shear Strength (psf)
q_p = Unconfined Compressive Strength (ksf)
N-uncorrected = Raw field SPT N-value
Hammer Efficiency Factor = Annual Calibration Value
N_{60} = SPT N-uncorrected corrected for hammer efficiency
N_{60} = (Hammer Efficiency Factor/60%)*N-uncorrected
$S_{u(lab)}$ = Lab Vane Shear Strength (psf)
WC = water content, percent
LL = Liquid Limit
PL = Plastic Limit
PI = Plasticity Index
G = Grain Size Analysis
C = Consolidation Test

Depth (ft.)	Sample No.	Pen./Rec. (in.)	Sample Depth (ft.)	Blows (/6 in. Shear Strength (psf) or RQD (%))	N-uncorrected	N60	Casing Blows	Elevation (ft.)	Visual Description and Remarks	Laboratory Testing Results/ AASHTO and Unified Class
25							71		TILL-(SW-SM)	
							69			
							70			
							75			
30	7D	24/6	29.0 - 31.0	34/38/19/25	57	57	63		Gray, wet, very dense, coarse to fine GRAVEL, little coarse to fine sand, little silt, bonded -GLACIAL TILL-(GM)	G#172186 A-1-b, GM
							68			
							84			
							115			
							126			
35							139			
							100(8")		Note: Rig chatter from 33.8 to 35.7 ft. Probable gravel/cobble layer.	-36.1
	R1	23/10	36.1 - 38.0	RQD = 0%				-50.3	Top of Bedrock at El.-50.3 R1: Recovery highly fractured, including heterogenous mix of gravel. One 3 in. piece of gray, fine grained, QUARTZITE. Moderately hard, slightly weathered. One steep angle joint, slightly weathered with silt coating on joint surface, open. Core run probably through glacial till layer. Rock Mass Quality=Very Poor -KITTERY FORMATION-(possible glacial till)- R1 Core Times (min:sec): 36.1-37.1'(4:00); 37.1-38.0'(5:00) R2: Gray, fine-grained to aphanitic, QUARTZITE. Moderately hard, slightly weathered. Primary joints dipping at low to moderate angles, close, open to healed, smooth, planar to undulating, discolored to slightly weathered with calcite coatings on some joint surfaces. One vertical joint at 39.1 ft, healed. Rock Mass Quality=Fair -KITTERY FORMATION- R2 Core Times (min:sec): 38.0-39.0'(5:00), 39.0-40.0'(6:00), 40.0-41.2'(6:00)	
	R2	38/38	38.0 - 41.2	RQD = 64%						
40								-55.4		
45									Bottom of Exploration 41.2 feet below ground surface. Note: Unable to advance casing beyond 36.1 ft. Borehole collapsing after completion of R2.	-41.2
50										

Remarks:
1. As-drilled coordinates of test borings determined by MaineDOT and provided in NAD 83 Maine 2000 West Zone coordinate system.
2. Hammer consisted of rope and cathead and safety hammer.

Stratification lines represent approximate boundaries between soil types; transitions may be gradual.

* Water level readings have been made at times and under conditions stated. Groundwater fluctuations may occur due to conditions other than those present at the time measurements were made.

Page 2 of 2
Boring No.: BB-YSL-105

NOTE
1. Boring Logs provided by Haley and Aldrich.

STATE OF MAINE
DEPARTMENT OF TRANSPORTATION
BR-1266(500)X
WIN 12665.00
BRIDGE NO. 3096
BRIDGE PLANS

STATE OF MAINE
Steven M. Hampden
LICENSED
PROFESSIONAL ENGINEER

PROJ. MANAGER	N. BENOIT	BY	DATE
DESIGN-DETAILED	LSG	KDW	2/12
CHECKED-REVIEWED	SMH	LSG	2/12
DESIGN2-DETAILED2	---	---	---
DESIGN3-DETAILED3	---	---	---
REVISIONS 1	---	---	---
REVISIONS 2	---	---	---
REVISIONS 3	---	---	---
REVISIONS 4	---	---	---
FIELD CHANGES	---	---	---

Steven M. Hampden
SIGNATURE
11206
P.E. NUMBER
2/15/2012
DATE

SEWALL'S BRIDGE
YORK RIVER
YORK COUNTY
YORK

BORING LOGS (5 OF 9)

SHEET NUMBER
19
OF 50

Maine Department of Transportation

Soil/Rock Exploration Log
US CUSTOMARY UNITS

Project: Sewall's Bridge Replacement
Location: York, Maine

Boring No.: BB-YSL-106
PIN: 12665.00

Driller:	Maine Test Borings	Elevation (ft.): 10.9	Auger ID/OD: -
Operator:	B. Enos	Datum: NAVD 88	Sampler: Split Spoon-1.375 in. in
Logged By:	M. Snow	Rig Type: Mobile B53 Truck	Hammer Wt./Fall: 140/30-SS, 300/16-NW
Date Start/Finish:	11/11/09-11/11/09	Drilling Method: SSA to 5', NW to 25'	Core Barrel: NQ-2.0
Boring Location:	See Plan (N110360.6, E907976.2)	Casing ID/OD: NW 3.0	Water Level*: Tidal
Hammer Efficiency Factor: 0.6		Hammer Type: Automatic ☐ Hydraulic ☐ Rope & Cathead ☒	

Definitions:
D = Split Spoon Sample
MD = Unsuccessful Split Spoon Sample attempt
U = Thin Wall Tube Sample
MU = Unsuccessful Thin Wall Tube Sample attempt
V = Insitu Vane Shear Test
MV = Unsuccessful Insitu Vane Shear Test attempt
R = Rock Core Sample
SSA = Solid Stem Auger
HSA = Hollow Stem Auger
RC = Roller Cone
WOH = weight of 140lb. hammer
WOR = weight of rods
WOSP = weight of one person
S_u = Insitu Field Vane Shear Strength (psf)
T_v = Pocket Torvane Shear Strength (psf)
q_p = Unconfined Compressive Strength (ksf)
N-uncorrected = Raw field SPT N-value
Hammer Efficiency Factor = Annual Calibration Value
N_{60} = SPT N-uncorrected corrected for hammer efficiency
N_{60} = (Hammer Efficiency Factor/60%)*N-uncorrected
$S_{u(lab)}$ = Lab Vane Shear Strength (psf)
WC = water content, percent
LL = Liquid Limit
PL = Plastic Limit
PI = Plasticity Index
G = Grain Size Analysis
C = Consolidation Test

Depth (ft.)	Sample No.	Pen./Rec. (in.)	Sample Depth (ft.)	Blows (/6 in. Shear Strength (psf) or RQD (%))	N-uncorrected	N_{60}	Casing Blows	Elevation (ft.)	Graphic Log	Visual Description and Remarks	Laboratory Testing Results/ AASHTO and Unified Class
0	1D	24/8	0.5 - 2.5	6/7/8/8	15	15	SSA	10.4		~Bituminous Concrete~ 0.5 Brown, dry, medium dense, medium to fine SAND, little coarse sand, little fine gravel, one piece of coarse gravel lodged in tip of sampler -FILL-(SW)	
										Brown, damp to wet at tip, medium dense, medium to fine SAND, some coarse sand, some fine gravel, trace silt -FILL-(SW)	
5	2D	24/12	5.0 - 7.0	3/6/6/5	12	12	10				
							16				
							6				
							14				
							28			Gray, wet, dense, coarse to fine gravel pieces, wood fragments	
10	3D	24/3	10.0 - 12.0	15/21/22/17	43	43	12				
							27	-0.6		11.5 Dark brown, wet, stiff, organic SILT, trace fine sand, organic odor -HARBOR BOTTOM DEPOSIT-(ML) Note: No recovery from 12 to 14 ft except for wood fragments in tip of sampler.	
	MD	24/0	12.0 - 14.0	6/10/6/5	16	16	27				
							18				
							12				
15	4D	24/12	15.0 - 17.0	4/4/7/13	11	11	23	-4.1		15.0 Dark gray, wet, medium dense, fine SAND with organics, little silt, trace shells, few brick fragments, organic odor -HARBOR BOTTOM DEPOSIT-(SP-SM)	
							23	-6.1		17.0	
							50				
							72				
							49				
20	MD	24/0	20.0 - 22.0	12/14/10/9	24	24	39			Note: Pushed on gravel, no recovery.	
							33				
	5D	24/4	22.0 - 24.0	12/20/18/20	38	38	53			Brown to gray, wet, dense, mottled coarse to fine SAND, some silt, trace fine gravel, gravel piece lodged in tip of sampler -MARINE DEPOSIT-(SM)	G#172175 A-2-4, SM
							56				
25							50				

Remarks:
1. As-drilled coordinates of test borings determined by MaineDOT and provided in NAD 83 Maine 2000 West Zone coordinate system.
2. Hammer consisted of rope and cathead and safety hammer.

Stratification lines represent approximate boundaries between soil types; transitions may be gradual.

* Water level readings have been made at times and under conditions stated. Groundwater fluctuations may occur due to conditions other than those present at the time measurements were made.

Maine Department of Transportation

Soil/Rock Exploration Log
US CUSTOMARY UNITS

Project: Sewall's Bridge Replacement
Location: York, Maine

Boring No.: BB-YSL-106
PIN: 12665.00

Driller:	Maine Test Borings	Elevation (ft.): 10.9	Auger ID/OD: -
Operator:	B. Enos	Datum: NAVD 88	Sampler: Split Spoon-1.375 in. in
Logged By:	M. Snow	Rig Type: Mobile B53 Truck	Hammer Wt./Fall: 140/30-SS, 300/16-NW
Date Start/Finish:	11/11/09-11/11/09	Drilling Method: SSA to 5', NW to 25'	Core Barrel: NQ-2.0
Boring Location:	See Plan (N110360.6, E907976.2)	Casing ID/OD: NW 3.0	Water Level*: Tidal
Hammer Efficiency Factor: 0.6		Hammer Type: Automatic ☐ Hydraulic ☐ Rope & Cathead ☒	

Definitions:
D = Split Spoon Sample
MD = Unsuccessful Split Spoon Sample attempt
U = Thin Wall Tube Sample
MU = Unsuccessful Thin Wall Tube Sample attempt
V = Insitu Vane Shear Test
MV = Unsuccessful Insitu Vane Shear Test attempt
R = Rock Core Sample
SSA = Solid Stem Auger
HSA = Hollow Stem Auger
RC = Roller Cone
WOH = weight of 140lb. hammer
WOR = weight of rods
WOSP = weight of one person
S_u = Insitu Field Vane Shear Strength (psf)
T_v = Pocket Torvane Shear Strength (psf)
q_p = Unconfined Compressive Strength (ksf)
N-uncorrected = Raw field SPT N-value
Hammer Efficiency Factor = Annual Calibration Value
N_{60} = SPT N-uncorrected corrected for hammer efficiency
N_{60} = (Hammer Efficiency Factor/60%)*N-uncorrected
$S_{u(lab)}$ = Lab Vane Shear Strength (psf)
WC = water content, percent
LL = Liquid Limit
PL = Plastic Limit
PI = Plasticity Index
G = Grain Size Analysis
C = Consolidation Test

Depth (ft.)	Sample No.	Pen./Rec. (in.)	Sample Depth (ft.)	Blows (/6 in. Shear Strength (psf) or RQD (%))	N-uncorrected	N_{60}	Casing Blows	Elevation (ft.)	Graphic Log	Visual Description and Remarks	Laboratory Testing Results/ AASHTO and Unified Class
25	6D	8/4	25.0 - 25.7	4/3(2")/50(0")				-14.8		Brown, wet, hard, mottled SILT, little fine sand, little coarse sand, little fine gravel -MARINE DEPOSIT-(ML) 25.7	
	R1	60/59	26.4 - 31.4	RQD = 43%				-15.5		Top of Bedrock at El.-14.8 -WEATHERED BEDROCK- 26.4 R1: Moderately hard, fresh, gray, aphanitic to fine grained, METASILTSTONE. Primary joints dipping at low to moderate angles, very close to close, tight to partly open, planar to undulating, smooth to rough, slight oxidation on some joint surfaces, occasional calcite coatings on some joint surfaces, pyrite mineralization, occasional calcite veins. One near vertical secondary joint, slightly weathered, undulating, rough, open, calcite coating. Rock Mass Quality=Poor -KITTERY FORMATION- R1 Core Times (min:sec): 26.4-27.4'(4:00), 27.4-28.4'(4:00), 28.4-29.4'(3:00), 29.4-30.4'(3:00), 30.4-31.4'(3:00) R2: Moderately hard, fresh, gray, aphanitic to fine grained, METASILTSTONE, joints dipping at moderate to high angles, very close to close, tight to partly open, planar to undulating, smooth to rough, one silt seam (in-filled joint). Rock Mass Quality=Fair -KITTERY FORMATION- R2 Core Times (min:sec): 31.4-32.0'(5:00) R3: Moderately hard, fresh, gray, aphanitic to fine grained METASILTSTONE. Primary joints dipping at moderate to high angles, close, tight, calcite coatings on some joint surfaces. Quartz intrusion from approximately 34.5 to 35.0 ft. Rock Mass Quality=Good -KITTERY FORMATION- R3 Core Times (min:sec): 32.0-33.0'(5:00), 33.0-34.0'(3:00), 34.0-35.0'(4:00), 35.0-36.0'(4:00)	UC qp=37,432 psi
30											
	R2	7/7	31.4 - 32.0	RQD = 57%							
	R3	54/54	32.0 - 36.5	RQD = 87%							
35								-25.6			
40											
45											
50											

Bottom of Exploration 36.5 feet below ground surface. 36.5

Remarks:
1. As-drilled coordinates of test borings determined by MaineDOT and provided in NAD 83 Maine 2000 West Zone coordinate system.
2. Hammer consisted of rope and cathead and safety hammer.

Stratification lines represent approximate boundaries between soil types; transitions may be gradual.

* Water level readings have been made at times and under conditions stated. Groundwater fluctuations may occur due to conditions other than those present at the time measurements were made.

NOTE
1. Boring Logs provided by Haley and Aldrich.

STATE OF MAINE
DEPARTMENT OF TRANSPORTATION

BR-1266(500)X

WIN 12665.00

BRIDGE NO. 3096

BRIDGE PLANS

STATE OF MAINE
Steven M. Hodgdon
No. 11206
LICENSED PROFESSIONAL ENGINEER

PROJ. MANAGER	N. BENOIT	BY	DATE
DESIGN-DETAILED	LSG	KDW	2/12
CHECKED-REVIEWED	SMH	LSG	2/12
DESIGN2-DETAILED2	---	---	---
DESIGN3-DETAILED3	---	---	---
REVISIONS 1	---	---	---
REVISIONS 2	---	---	---
REVISIONS 3	---	---	---
REVISIONS 4	---	---	---
FIELD CHANGES	---	---	---

Steven M. Hodgdon
SIGNATURE

11206
P.E. NUMBER

2/15/2012
DATE

SEWALL'S BRIDGE
YORK RIVER
YORK COUNTY
YORK

BORING LOGS (6 OF 9)

SHEET NUMBER
20
OF 50

Filename: ...\st\planset\020_boring_06.dgn Division: Structures Username: kwentworth Date:2/15/2012

Maine Department of Transportation

Soil/Rock Exploration Log
US CUSTOMARY UNITS

Project: Sewall's Bridge Replacement
Location: York, Maine

Boring No.: BB-YSL-201
PIN: 12665.00

Driller:	New Hampshire Boring, Inc.	Elevation (ft.):	-12.2	Auger ID/OD:	--
Operator:	S. Cooley	Datum:	NAVD 88	Sampler:	Split Spoon 1.375 in.
Logged By:	T. Erickson	Rig Type:	CME 25 Barge	Hammer Wt./Fall:	140/24-SS, 300/30-HW
Date Start/Finish:	6/14/11-6/15/11	Drilling Method:	HW to 22.5', NQ to 27.5'	Core Barrel:	NQ-2.0
Boring Location:	See Plan (N110389.8, E908012.2)	Casing ID/OD:	HW-4.0	Water Level*:	Tidal
Hammer Efficiency Factor: 0.6		Hammer Type:	Automatic ☐ Hydraulic ☐ Rope & Cathead ☒		

Definitions:
D = Split Spoon Sample
MD = Unsuccessful Split Spoon Sample attempt
U = Thin Wall Tube Sample
MU = Unsuccessful Thin Wall Tube Sample attempt
V = In-situ Vane Shear Test
MV = Unsuccessful In-situ Vane Shear Test attempt
R = Rock Core Sample
SSA = Solid Stem Auger
HSA = Hollow Stem Auger
RC = Roller Cone
WOH = weight of 140lb. hammer
WOR = weight of rods
WOGP = weight of one person
S_u = In-situ Field Vane Shear Strength (psf)
T_v = Pocket Torvane Shear Strength (psf)
q_p = Unconfined Compressive Strength (ksf)
N-uncorrected = Raw field SPT N-value
Hammer Efficiency Factor = Annual Calibration Value
N_{60} = SPT N-uncorrected corrected for hammer efficiency
N_{60} = (Hammer Efficiency Factor/60%)*N-uncorrected
$S_{u(lab)}$ = Lab Vane Shear Strength (psf)
WC = water content, percent
LL = Liquid Limit
PL = Plastic Limit
PI = Plasticity Index
G = Grain Size Analysis
C = Consolidation Test

Sample Information

Depth (ft.)	Sample No.	Pen./Rec. (in.)	Sample Depth (ft.)	Blows (/6 in. Shear Strength (psf) or RQD (%))	N-uncorrected	N_{60}	Casing Blows	Elevation (ft.)	Graphic Log	Visual Description and Remarks	Laboratory Testing Results/ AASHTO and Unified Class.
0	MD	24/0	0.0 - 2.0	WOR/WOR/WOR/WOR						No Recovery Note: Split spoon taken from 3.0 to 5.0 ft due to very soft soils at mudline surface.	
	2D	24/14	3.0 - 5.0	6/2/4/4	6	6		-16.4		Black and dark gray, wet, medium stiff, SILT, some fine sand, little clay, shell material, weakly cemented -HARBOR BOTTOM DEPOSIT-(ML)	4.2
5	3D	24/22	5.0 - 7.0	5/6/7/7	13	13		-17.7		Gray, wet, loose, silty SAND, little clay, trace shell material, poorly graded, slightly cemented -MARINE DEPOSIT-(SM)	6.5
	4D	24/16	7.0 - 9.0	7/7/7/6	14	14		-19.7		Olive, wet, stiff, SILT, some fine sand, little silty clay, moderate to strong cementation, occasional clay seams -MARINE DEPOSIT-(ML)	9.5
10	5D	24/14	9.0 - 11.0	4/5/5/7	10	10				Olive-brown, wet, medium dense, silty SAND, trace clay, poorly graded, moderately cemented -MARINE DEPOSIT-(SM) Olive-brown, wet, loose, silty SAND, poorly graded, slightly cemented, occasional stratification -MARINE DEPOSIT-(SM)	12.5
15	6D	24/7	15.0 - 17.0	5/5/11/6	16	16		-27.2		Gray-brown, wet, medium dense, SAND, some gravel, little silt, poorly graded, moderately well bonded -GLACIAL TILL-(SP-SM)	15.0
20	7D	4/4	20.0 - 20.3	100(4.0)						Gray-brown, wet, very dense, gravelly SAND, little silt, poorly graded, moderately well bonded -GLACIAL TILL-(SP-SM)	
	R1	60/60	22.5 - 27.5	RQD = 25%				-34.7		Top of Bedrock at El.-34.7 R1: Dark gray, light gray and reddish-brown streaks, aphanitic to fine grained, METASILTSTONE and QUARTZITE, moderately hard to hard. Primary joint set is dipping vertical, present from 23.5 to 26.0 ft and from 27.0 to 27.5 ft, planar to undulating, smooth to rough, tight	22.5
25											

Remarks:
1. As-drilled coordinates of test borings determined by MaineDOT and provided in NAD 83 Maine West Zone coordinate system.

Stratification lines represent approximate boundaries between soil types; transitions may be gradual.
* Water level readings have been made at times and under conditions stated. Groundwater fluctuations may occur due to conditions other than those present at the time measurements were made.

Maine Department of Transportation
Soil/Rock Exploration Log
US CUSTOMARY UNITS
Project: Sewall's Bridge Replacement
Location: York, Maine
Boring No.: BB-YSL-201
PIN: 12665.00
Driller: New Hampshire Boring, Inc. | Elevation (ft.): -12.2 | Auger ID/OD: --
Operator: S. Cooley | Datum: NAVD 88 | Sampler: Split Spoon 1.375 in.
Logged By: T. Erickson | Rig Type: CME 25 Barge | Hammer Wt./Fall: 140/24-SS, 300/30-HW
Date Start/Finish: 6/14/11-6/15/11 | Drilling Method: HW to 22.5', NQ to 27.5' | Core Barrel: NQ-2.0
Boring Location: See Plan (N110389.8, E908012.2) | Casing ID/OD: HW-4.0 | Water Level*: Tidal
Hammer Efficiency Factor: 0.6 | Hammer Type: Automatic ☐ Hydraulic ☐ Rope & Cathead ☒
Definitions:
D = Split Spoon Sample
MD = Unsuccessful Split Spoon Sample attempt
U = Thin Wall Tube Sample
MU = Unsuccessful Thin Wall Tube Sample attempt
V = In-situ Vane Shear Test
MV = Unsuccessful In-situ Vane Shear Test attempt
R = Rock Core Sample
SSA = Solid Stem Auger
HSA = Hollow Stem Auger
RC = Roller Cone
WOH = weight of 140lb. hammer
WOR = weight of rods
WOGP = weight of one person
S_u = In-situ Field Vane Shear Strength (psf)
T_v = Pocket Torvane Shear Strength (psf)
q_p = Unconfined Compressive Strength (ksf)
N-uncorrected = Raw field SPT N-value
Hammer Efficiency Factor = Annual Calibration Value
N_{60} = SPT N-uncorrected corrected for hammer efficiency
N_{60} = (Hammer Efficiency Factor/60%)*N-uncorrected
$S_{u(lab)}$ = Lab Vane Shear Strength (psf)
WC = water content, percent
LL = Liquid Limit
PL = Plastic Limit
PI = Plasticity Index
G = Grain Size Analysis
C = Consolidation Test
Sample Information

Depth (ft.)	Sample No.	Pen./Rec. (in.)	Sample Depth (ft.)	Blows (/6 in. Shear Strength (psf) or RQD (%))	N-uncorrected	N_{60}	Casing Blows	Elevation (ft.)	Graphic Log	Visual Description and Remarks	Laboratory Testing Results/ AASHTO and Unified Class.
25								-39.7		to open, minor calcite infilling. Secondary joint set is dipping horizontal to low angle, close to moderately close, planar, smooth, tight to open, trace of calcite present. Rock Mass Quality=Very Poor -KITTERY FORMATION- R1 Core Times (min:sec): 22.5-23.5' (6:00), 23.5-24.5' (6:00), 24.5-25.5' (6:00), 25.5-26.5' (6:30), 26.5-27.5' (7:00)	27.5
30										Bottom of Exploration 27.5 feet below ground surface.	
35											
40											
45											
50											

Remarks:
1. As-drilled coordinates of test borings determined by MaineDOT and provided in NAD 83 Maine West Zone coordinate system.
Stratification lines represent approximate boundaries between soil types; transitions may be gradual.
* Water level readings have been made at times and under conditions stated. Groundwater fluctuations may occur due to conditions other than those present at the time measurements were made.

NOTE
1. Boring Logs provided by Haley and Aldrich.

STATE OF MAINE
DEPARTMENT OF TRANSPORTATION
BR-1266(500)X
WIN 12665.00
BRIDGE NO. 3096
BRIDGE PLANS

STATE OF MAINE
Steven M. Hampton
No. 11206
LICENSED PROFESSIONAL ENGINEER

PROJ. MANAGER	N. BENOIT	BY	DATE
DESIGN-DETAILED	LSG	KDW	2\12
CHECKED-REVIEWED	SMH	LSG	2\12
DESIGN2-DETAILED2	---	---	---
DESIGN3-DETAILED3	---	---	---
REVISIONS 1	---	---	---
REVISIONS 2	---	---	---
REVISIONS 3	---	---	---
REVISIONS 4	---	---	---
FIELD CHANGES	---	---	---

SIGNATURE
11206
P.E. NUMBER
2/15/2012
DATE

SEWALL'S BRIDGE
YORK RIVER
YORK COUNTY
YORK

BORING LOGS (7 OF 9)

SHEET NUMBER
21
OF 50

Filename: ...\st\planset\021_boring_07.dgn Division: Structures Username: kwentworth Date:2/15/2012

Filename: ...\st\planset\022_boring_08.dgn Division: Structures Username: kwentworth Date:2/15/2012

Maine Department of Transportation

Soil/Rock Exploration Log
US CUSTOMARY UNITS

Project: Sewall's Bridge Replacement
Location: York, Maine

Boring No.: BB-YSL-202
PIN: 12665.00

Driller:	New Hampshire Boring, Inc.	Elevation (ft.)	-18.0
Operator:	S. Cooley	Datum:	NAVD 88
Logged By:	T. Erickson	Rig Type:	CME 25 Barge
Date Start/Finish:	6/10/11-6/13/11	Drilling Method:	HW to 53.5', NQ to 58.5'
Boring Location:	See Plan (N110493.3, E908038.5)	Casing ID/OD:	HW-4.0
Hammer Efficiency Factor: 0.6		Hammer Type:	Automatic ☐ Hydraulic ☐ Rope & Cathead ☒
Auger ID/OD:	--	Sampler:	Split Spoon 1.375 in. ID
Hammer Wt./Fall:	140/24-SS, 300/30-HW	Core Barrel:	NQ-2.0
Water Level*:	Tidal		

Definitions:
D = Split Spoon Sample
MD = Unsuccessful Split Spoon Sample attempt
U = Thin Wall Tube Sample
MU = Unsuccessful Thin Wall Tube Sample attempt
V = Insitu Vane Shear Test
MV = Unsuccessful Insitu Vane Shear Test attempt
R = Rock Core Sample
SSA = Solid Stem Auger
HSA = Hollow Stem Auger
RC = Roller Cone
WOH = weight of 140lb. hammer
WOR = weight of rods
WOIP = Weight of one person
S_u = Insitu Field Vane Shear Strength (psf)
T_v = Pocket Torvane Shear Strength (psf)
q_p = Unconfined Compressive Strength (ksf)
N-uncorrected = Raw field SPT N-value
Hammer Efficiency Factor = Annual Calibration Value
N_{60} = SPT N-uncorrected corrected for hammer efficiency
N_{60} = (Hammer Efficiency Factor/60%)*N-uncorrected
$S_{u(lab)}$ = Lab Vane Shear Strength (psf)
WC = water content, percent
LL = Liquid Limit
PL = Plastic Limit
PI = Plasticity Index
G = Grain Size Analysis
C = Consolidation Test

Sample Information

Depth (ft.)	Sample No.	Pen./Rec. (in.)	Sample Depth (ft.)	Blows (/6 in.) Shear Strength (psf) (qp RQD) (%)	N-uncorrected	N_{60}	Casing Blows	Elevation (ft.)	Visual Description and Remarks	Laboratory Testing Results/ AASHTO and Unified Class.
0	1D	24/6	0.0 - 2.0	WOR/WOR/WOR/WOR					Black and dark gray, wet, very loose, silty SAND with little shell material, poorly graded, weakly cemented -HARBOR BOTTOM DEPOSIT-(SM)	
	2D	24/10	2.0 - 4.0	4/4/5/7	9	9			Black and dark gray, wet, loose, silty SAND with little shell material, poorly graded, weakly cemented -HARBOR BOTTOM DEPOSIT-(SM)	
5	3D	24/20	4.0 - 6.0	6/6/5/4	11	11				
								-23.2	5.2	
	4D	24/24	6.0 - 8.0	2/4/9/15	13	13			Gray, wet, medium dense, SAND, little silt, trace wood, poorly graded -MARINE DEPOSIT-(SP-SM) Gray, wet, medium dense, SAND, little gravel, trace silt, poorly graded -MARINE DEPOSIT-(SP)	
	5D	24/15	8.0 - 10.0	6/5/5/4	10	10			Gray, wet, loose, fine SAND, poorly graded -MARINE DEPOSIT-(SP)	
10										
								-32.0	14.0	
15	6D	24/20	14.0 - 16.0	3/4/4/7	8	8			Gray, wet, loose, SAND, some silt, trace clay, poorly graded, weakly cemented -MARINE DEPOSIT-(SM)	
								-36.0	18.0	
20	7D	24/18	18.0 - 20.0	11/14/9/14	23	23			Gray, wet, medium dense, fine SAND, trace clay, poorly graded -MARINE DEPOSIT-(SP)	
25	8D	24/24	24.0 - 26.0	19/22/37/47	59	59			Gray, wet, very dense, fine SAND, poorly graded -MARINE DEPOSIT-(SP)	

Remarks:
1. As-drilled coordinates of test borings determined by MaineDOT and provided in NAD 83 Maine West Zone coordinate system.

Stratification lines represent approximate boundaries between soil types; transitions may be gradual.
* Water level readings have been made at times and under conditions stated. Groundwater fluctuations may occur due to conditions other than those present at the time measurements were made.

Page 1 of 3
Boring No.: BB-YSL-202

Maine Department of Transportation

Soil/Rock Exploration Log
US CUSTOMARY UNITS

Project: Sewall's Bridge Replacement
Location: York, Maine

Boring No.: BB-YSL-202
PIN: 12665.00

Driller:	New Hampshire Boring, Inc.	Elevation (ft.)	-18.0
Operator:	S. Cooley	Datum:	NAVD 88
Logged By:	T. Erickson	Rig Type:	CME 25 Barge
Date Start/Finish:	6/10/11-6/13/11	Drilling Method:	HW to 53.5', NQ to 58.5'
Boring Location:	See Plan (N110493.3, E908038.5)	Casing ID/OD:	HW-4.0
Hammer Efficiency Factor: 0.6		Hammer Type:	Automatic ☐ Hydraulic ☐ Rope & Cathead ☒
Auger ID/OD:	--	Sampler:	Split Spoon 1.375 in. ID
Hammer Wt./Fall:	140/24-SS, 300/30-HW	Core Barrel:	NQ-2.0
Water Level*:	Tidal		

Definitions:
D = Split Spoon Sample
MD = Unsuccessful Split Spoon Sample attempt
U = Thin Wall Tube Sample
MU = Unsuccessful Thin Wall Tube Sample attempt
V = Insitu Vane Shear Test
MV = Unsuccessful Insitu Vane Shear Test attempt
R = Rock Core Sample
SSA = Solid Stem Auger
HSA = Hollow Stem Auger
RC = Roller Cone
WOH = weight of 140lb. hammer
WOR = weight of rods
WOIP = Weight of one person
S_u = Insitu Field Vane Shear Strength (psf)
T_v = Pocket Torvane Shear Strength (psf)
q_p = Unconfined Compressive Strength (ksf)
N-uncorrected = Raw field SPT N-value
Hammer Efficiency Factor = Annual Calibration Value
N_{60} = SPT N-uncorrected corrected for hammer efficiency
N_{60} = (Hammer Efficiency Factor/60%)*N-uncorrected
$S_{u(lab)}$ = Lab Vane Shear Strength (psf)
WC = water content, percent
LL = Liquid Limit
PL = Plastic Limit
PI = Plasticity Index
G = Grain Size Analysis
C = Consolidation Test

Sample Information

Depth (ft.)	Sample No.	Pen./Rec. (in.)	Sample Depth (ft.)	Blows (/6 in.) Shear Strength (psf) (qp RQD) (%)	N-uncorrected	N_{60}	Casing Blows	Elevation (ft.)	Visual Description and Remarks	Laboratory Testing Results/ AASHTO and Unified Class.
30	9D	24/20	29.0 - 31.0	29/36/42/52	78	78			Gray, wet, very dense, fine SAND, trace silt, poorly graded -MARINE DEPOSIT-(SP)	
									Note: Sample 10D taken at a different sampling interval due to tidal changes.	
35	10D	18/15	33.5 - 35.0	14/37/102	139	139			Gray-brown, wet, very dense, fine SAND, poorly graded -MARINE DEPOSIT-(SP)	
									Note: Drilling action indicated a strata change at 38.0 ft.	
								-56.0	38.0	
40	11D	18/6	38.0 - 39.5	80/104/111	215	215			Gray, wet, very dense, gravelly SAND, trace silt, poorly graded, loosely bonded -GLACIAL TILL-(SP)	
45	12D	17/8	44.0 - 45.4	23/86/100(5.0)	186	186			Gray, wet, very dense, SAND, little gravel, trace silt, poorly graded -GLACIAL TILL-(SP)	
50	13D	24/17	49.0 - 51.0	66/73/43/52	116	116			Gray, wet, very dense, gravelly SAND, trace silt, poorly graded, weak to moderate bonding	

Remarks:
1. As-drilled coordinates of test borings determined by MaineDOT and provided in NAD 83 Maine West Zone coordinate system.

Stratification lines represent approximate boundaries between soil types; transitions may be gradual.
* Water level readings have been made at times and under conditions stated. Groundwater fluctuations may occur due to conditions other than those present at the time measurements were made.

Page 2 of 3
Boring No.: BB-YSL-202

Maine Department of Transportation

Soil/Rock Exploration Log
US CUSTOMARY UNITS

Project: Sewall's Bridge Replacement
Location: York, Maine

Boring No.: BB-YSL-202
PIN: 12665.00

Driller:	New Hampshire Boring, Inc.	Elevation (ft.)	-18.0
Operator:	S. Cooley	Datum:	NAVD 88
Logged By:	T. Erickson	Rig Type:	CME 25 Barge
Date Start/Finish:	6/10/11-6/13/11	Drilling Method:	HW to 53.5', NQ to 58.5'
Boring Location:	See Plan (N110493.3, E908038.5)	Casing ID/OD:	HW-4.0
Hammer Efficiency Factor: 0.6		Hammer Type:	Automatic ☐ Hydraulic ☐ Rope & Cathead ☒
Auger ID/OD:	--	Sampler:	Split Spoon 1.375 in. ID
Hammer Wt./Fall:	140/24-SS, 300/30-HW	Core Barrel:	NQ-2.0
Water Level*:	Tidal		

Definitions:
D = Split Spoon Sample
MD = Unsuccessful Split Spoon Sample attempt
U = Thin Wall Tube Sample
MU = Unsuccessful Thin Wall Tube Sample attempt
V = Insitu Vane Shear Test
MV = Unsuccessful Insitu Vane Shear Test attempt
R = Rock Core Sample
SSA = Solid Stem Auger
HSA = Hollow Stem Auger
RC = Roller Cone
WOH = weight of 140lb. hammer
WOR = weight of rods
WOIP = Weight of one person
S_u = Insitu Field Vane Shear Strength (psf)
T_v = Pocket Torvane Shear Strength (psf)
q_p = Unconfined Compressive Strength (ksf)
N-uncorrected = Raw field SPT N-value
Hammer Efficiency Factor = Annual Calibration Value
N_{60} = SPT N-uncorrected corrected for hammer efficiency
N_{60} = (Hammer Efficiency Factor/60%)*N-uncorrected
$S_{u(lab)}$ = Lab Vane Shear Strength (psf)
WC = water content, percent
LL = Liquid Limit
PL = Plastic Limit
PI = Plasticity Index
G = Grain Size Analysis
C = Consolidation Test

Sample Information

Depth (ft.)	Sample No.	Pen./Rec. (in.)	Sample Depth (ft.)	Blows (/6 in.) Shear Strength (psf) (qp RQD) (%)	N-uncorrected	N_{60}	Casing Blows	Elevation (ft.)	Visual Description and Remarks	Laboratory Testing Results/ AASHTO and Unified Class.
50									-GLACIAL TILL-(SP)	
									53.5	
55	R1	60.0/ 60.0	53.5 - 58.5	RQD = 68%				-71.5	Top of Bedrock at El. -71.5 R1: Gray with white streaks, aphanitic to fine grained METASILTSTONE, moderately hard to hard. Primary joint set dipping horizontal to low angle, very close to moderately close, planar to undulating, smooth to rough, tight to open, calcite infilling present at 55.5 and 56.0 ft, up to 1/8 in. thick, along joint surfaces. Secondary joint set dipping steep to vertical, very close to wide, open, traces of white calcite present along joint surfaces. Zone of low angle foliation quartz/calcite banding at approximately 55.5 ft. Rock Mass Quality=Fair -KITTERY FORMATION- R1 Core Times (min:sec): 53.5-54.5' (6:00), 54.5-55.5' (7:00), 56.5-57.5' (12:00), 57.5-58.5' (11:00), 58.5-59.5' (10:00)	
60								-76.5		
65										
70										
75									58.5 Bottom of Exploration 58.5 feet below ground surface.	

Remarks:
1. As-drilled coordinates of test borings determined by MaineDOT and provided in NAD 83 Maine West Zone coordinate system.

Stratification lines represent approximate boundaries between soil types; transitions may be gradual.
* Water level readings have been made at times and under conditions stated. Groundwater fluctuations may occur due to conditions other than those present at the time measurements were made.

Page 3 of 3
Boring No.: BB-YSL-202

NOTE
1. Boring Logs provided by Haley and Aldrich.

STATE OF MAINE
DEPARTMENT OF TRANSPORTATION

BR-1266(500)X

WIN 12665.00

BRIDGE NO. 3096

BRIDGE PLANS

STATE OF MAINE
Steven M. Hodgdon
No. 11206
LICENSED PROFESSIONAL ENGINEER

Steven M. Hodgdon			
SIGNATURE			
11206			
P.E. NUMBER			
2/15/2012			
DATE			

PROJ. MANAGER	N. BENOIT	BY	DATE
DESIGN-DETAILED	LSG	KDW	2/12
CHECKED-REVIEWED	SMH	LSG	2/12
DESIGN2-DETAILED2	---	---	---
DESIGN3-DETAILED3	---	---	---
REVISIONS 1	---	---	---
REVISIONS 2	---	---	---
REVISIONS 3	---	---	---
REVISIONS 4	---	---	---
FIELD CHANGES	---	---	---

SEWALL'S BRIDGE
YORK RIVER
YORK COUNTY
YORK

BORING LOGS (8 OF 9)

SHEET NUMBER
22
OF 50

Filename: ...\st\planset\023_boring_09.dgn Division: Structures Username: kwentworth Date:2/15/2012

Maine Department of Transportation

Soil/Rock Exploration Log
US CUSTOMARY UNITS

Project: Sewall's Bridge Replacement
Location: York, Maine

Boring No.: BB-YSL-203
PIN: 12665.00

Driller:	New Hampshire Boring, Inc.	Elevation (ft.): -5.5	Auger ID/OD: --
Operator:	S. Cooley	Datum: NAVD 88	Sampler: Split Spoon 1.375 in. in
Logged By:	T. Erickson	Rig Type: CME 25 Barge	Hammer Wt./Fall: 140/24-SS, 300/30-HW
Date Start/Finish:	6/8/11-6/9/11	Drilling Method: HW to 36.0', NQ to 41.0'	Core Barrel: NQ-2.0
Boring Location:	See Plan (N110595.6, E908063.4)	Casing ID/OD: HW-4.0	Water Level*: Tidal
Hammer Efficiency Factor: 0.6		Hammer Type: Automatic ☐ Hydraulic ☐ Rope & Cathead ☒	

Definitions:
D = Split Spoon Sample
MD = Unsuccessful Split Spoon Sample attempt
U = Thin Wall Tube Sample
MU = Unsuccessful Thin Wall Tube Sample attempt
V = Insitu Vane Shear Test
MV = Unsuccessful Insitu Vane Shear Test attempt
R = Rock Core Sample
SSA = Solid Stem Auger
HSA = Hollow Stem Auger
RC = Roller Cone
WOH = weight of 140lb. hammer
WOR = weight of rods
WOGP = weight of one person
$S_{u(field)}$ = Insitu Field Vane Shear Strength (psf)
T_v = Pocket Torvane Shear Strength (psf)
q_p = Unconfined Compressive Strength (ksf)
N-uncorrected = Raw field SPT N-value
Hammer Efficiency Factor = Annual Calibration Value
N_{60} = SPT N-uncorrected corrected for hammer efficiency
N_{60} = (Hammer Efficiency Factor/60%)*N-uncorrected
$S_{u(lab)}$ = Lab Vane Shear Strength (psf)
WC = water content, percent
LL = Liquid Limit
PL = Plastic Limit
PI = Plasticity Index
G = Grain Size Analysis
C = Consolidation Test

Sample Information

Depth (ft.)	Sample No.	Pen./Rec. (in.)	Sample Depth (ft.)	Blows (/6 in. Shear Strength (psf) or RQD (%))	N-uncorrected	N_{60}	Casing Blows	Elevation (ft.)	Graphic Log	Visual Description and Remarks	Laboratory Testing Results/ AASHTO and Unified Class
0	1D	24/6	0.0 - 2.0	1/2/2/2	4	4				Gray, wet, very loose, SAND, some silt, trace clay, poorly graded, traces of wood and shell material -HARBOR BOTTOM DEPOSIT-(SM)	
	MD	24/0	2.0 - 4.0	WOR/WOR/WOR/WOR						No Recovery	
								-9.5		4.0 Gray, wet, soft, silty CLAY, some fine sand, trace silt -MARINE DEPOSIT-(CL)	
5	3D	24/14	4.0 - 6.0	3/2/2/3	4	4					
								-11.5		6.0 Gray, wet, loose, clayey SAND, trace silt, poorly graded, occasional clay layers -MARINE DEPOSIT-(SC)	
	4D	24/20	6.0 - 8.0	2/3/4/7	7	7					
	5D	24/22	8.0 - 10.0	2/4/5/7	9	9				Gray, wet, loose, SAND, some silty clay, trace silt, poorly graded, silty clay from 9.6 to 10.0 ft -MARINE DEPOSIT-(SC)	
10											
15	6D	24/22	14.0 - 16.0	3/3/1/2	4	4				Yellow-brown (14.0 to 14.6 ft), gray, wet, very loose SAND, some silty clay, trace silt, poorly graded, silty clay (14.0 to 14.6 ft), occasional clay layers -MARINE DEPOSIT-(SC)	
20	7D	24/24	19.0 - 21.0	19/17/22/26	39	39				Gray (19.0 to 19.4 ft) to gray-brown, wet, dense SAND, some silty clay, trace silt, poorly graded, occasional silty clay layers (19.0 to 20.0 ft), sand from 20.0 to 21.0 ft -MARINE DEPOSIT-(SC)	
								-28.5		Note: Rollerbit action indicated a strata change at 23.0 ft. 23.0	
25											

Remarks:
1. As-drilled coordinates of test borings determined by MaineDOT and provided in NAD 83 Maine West Zone coordinate system.

Stratification lines represent approximate boundaries between soil types; transitions may be gradual.
* Water level readings have been made at times and under conditions stated. Groundwater fluctuations may occur due to conditions other than those present at the time measurements were made.

Page 1 of 2
Boring No.: BB-YSL-203

Maine Department of Transportation

Soil/Rock Exploration Log
US CUSTOMARY UNITS

Project: Sewall's Bridge Replacement
Location: York, Maine

Boring No.: BB-YSL-203
PIN: 12665.00

Driller:	New Hampshire Boring, Inc.	Elevation (ft.): -5.5	Auger ID/OD: --
Operator:	S. Cooley	Datum: NAVD 88	Sampler: Split Spoon 1.375 in. in
Logged By:	T. Erickson	Rig Type: CME 25 Barge	Hammer Wt./Fall: 140/24-SS, 300/30-HW
Date Start/Finish:	6/8/11-6/9/11	Drilling Method: HW to 36.0', NQ to 41.0'	Core Barrel: NQ-2.0
Boring Location:	See Plan (N110595.6, E908063.4)	Casing ID/OD: HW-4.0	Water Level*: Tidal
Hammer Efficiency Factor: 0.6		Hammer Type: Automatic ☐ Hydraulic ☐ Rope & Cathead ☒	

Definitions:
D = Split Spoon Sample
MD = Unsuccessful Split Spoon Sample attempt
U = Thin Wall Tube Sample
MU = Unsuccessful Thin Wall Tube Sample attempt
V = Insitu Vane Shear Test
MV = Unsuccessful Insitu Vane Shear Test attempt
R = Rock Core Sample
SSA = Solid Stem Auger
HSA = Hollow Stem Auger
RC = Roller Cone
WOH = weight of 140lb. hammer
WOR = weight of rods
WOGP = weight of one person
$S_{u(field)}$ = Insitu Field Vane Shear Strength (psf)
T_v = Pocket Torvane Shear Strength (psf)
q_p = Unconfined Compressive Strength (ksf)
N-uncorrected = Raw field SPT N-value
Hammer Efficiency Factor = Annual Calibration Value
N_{60} = SPT N-uncorrected corrected for hammer efficiency
N_{60} = (Hammer Efficiency Factor/60%)*N-uncorrected
$S_{u(lab)}$ = Lab Vane Shear Strength (psf)
WC = water content, percent
LL = Liquid Limit
PL = Plastic Limit
PI = Plasticity Index
G = Grain Size Analysis
C = Consolidation Test

Sample Information

Depth (ft.)	Sample No.	Pen./Rec. (in.)	Sample Depth (ft.)	Blows (/6 in. Shear Strength (psf) or RQD (%))	N-uncorrected	N_{60}	Casing Blows	Elevation (ft.)	Graphic Log	Visual Description and Remarks	Laboratory Testing Results/ AASHTO and Unified Class
25	8D	24/8	25.0 - 27.0	11/24/21/13	45	45				Gray, wet, dense, gravelly SAND, trace silt, poorly graded, loosely bonded -GLACIAL TILL-(SP)	
										Gray-brown, wet, very dense, gravelly SAND, little silt, poorly graded, well bonded -GLACIAL TILL DEPOSIT-(SP-SM)	
30	9D	24/18	30.0 - 32.0	42/49/47/48	96	96					
								-35.0		Brown, wet, very dense, gravelly SAND, little silt, poorly graded, well bonded -GLACIAL TILL-(SP-SM)	
								-35.5		Gray, wet, very dense, SAND, some gravel, little silt, poorly graded, well bonded -GLACIAL TILL-(SP-SM)	
								-36.0		Top of Bedrock at El. -41.5 R1: Gray with green streaks, aphanitic to fine grained METASILTSTONE, moderately hard to hard. Primary joint set dipping horizontal to 10m angle, only present at depth 39.8 and 40.1 ft, planar, smooth to rough, tight to open, traces of calcite infilling. One calcite infilled, healed vertical joint. Rock Mass Quality=Good -KITTERY FORMATION- R1 Core Times (min:sec): 36.0-37.0' (6:00), 37.0-38.0' (6:30), 38.0-39.0' (6:00), 39.0-40.0' (6:00), 40.0-41.0' (6:30)	
35	10D	10/5	35.0 - 35.8	22/100(4.0)				-40.5			
	R1	60/58	36.0 - 41.0	RQD = 88%				-41.0			
								-41.5			
40											
								-46.5			
45											
										Bottom of Exploration 41.0 feet below ground surface	
50											

Remarks:
1. As-drilled coordinates of test borings determined by MaineDOT and provided in NAD 83 Maine West Zone coordinate system.

Stratification lines represent approximate boundaries between soil types; transitions may be gradual.
* Water level readings have been made at times and under conditions stated. Groundwater fluctuations may occur due to conditions other than those present at the time measurements were made.

Page 2 of 2
Boring No.: BB-YSL-203

NOTE
1. Boring Logs provided by Haley and Aldrich.

STATE OF MAINE
DEPARTMENT OF TRANSPORTATION
BR-1266(500)X
WIN 12665.00
BRIDGE NO. 3096
BRIDGE PLANS

STATE OF MAINE · Steven M. Hampton · 11206 · LICENSED · PROFESSIONAL ENGINEER

		BY	DATE
PROJ. MANAGER	N. BENOIT		
DESIGN-DETAILED	LSG	KDW	2\12
CHECKED-REVIEWED	SMH	LSG	2\12
DESIGN2-DETAILED2	---	---	---
DESIGN3-DETAILED3	---	---	---
REVISIONS 1	---	---	---
REVISIONS 2	---	---	---
REVISIONS 3	---	---	---
REVISIONS 4	---	---	---
FIELD CHANGES	---	---	---

Steven M. Hampton
SIGNATURE
11206
P.E. NUMBER
2/15/2012
DATE

SEWALL'S BRIDGE
YORK RIVER
YORK COUNTY
YORK

BORING LOGS (9 OF 9)

SHEET NUMBER
23
OF 50

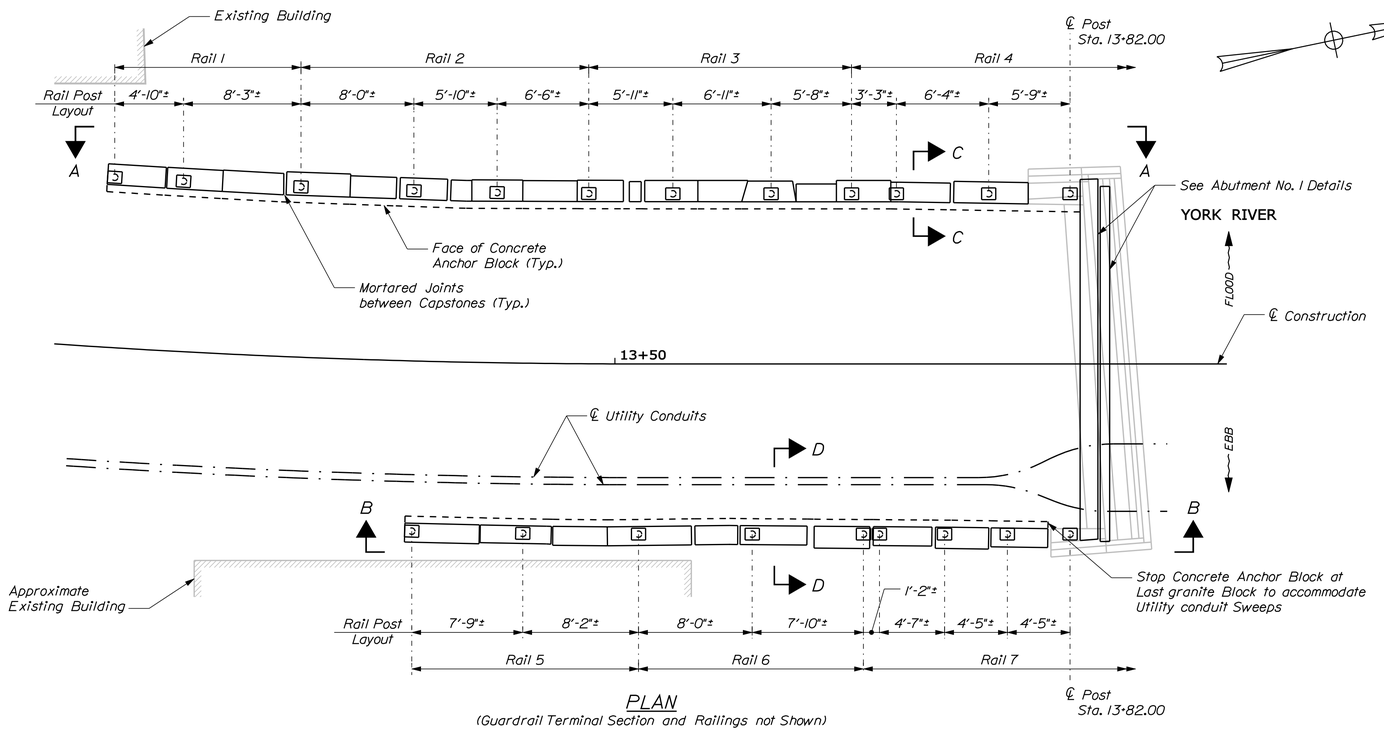

PLAN
(Guardrail Terminal Section and Railings not Shown)

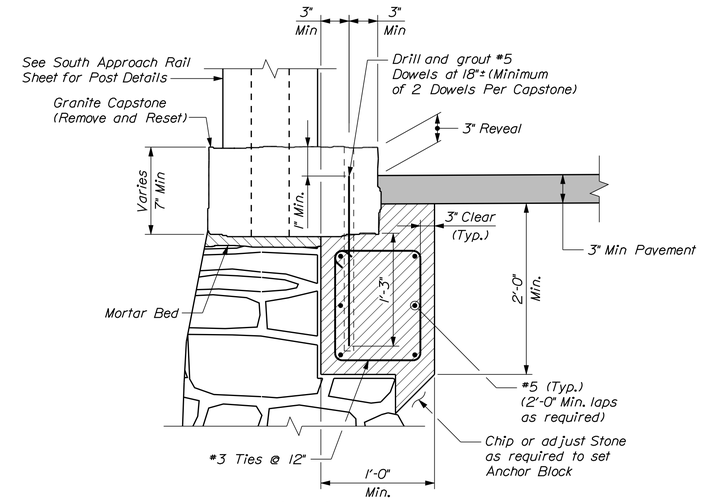

DETAIL A
(Southwest Anchor Block Shown, Southeast Similar)

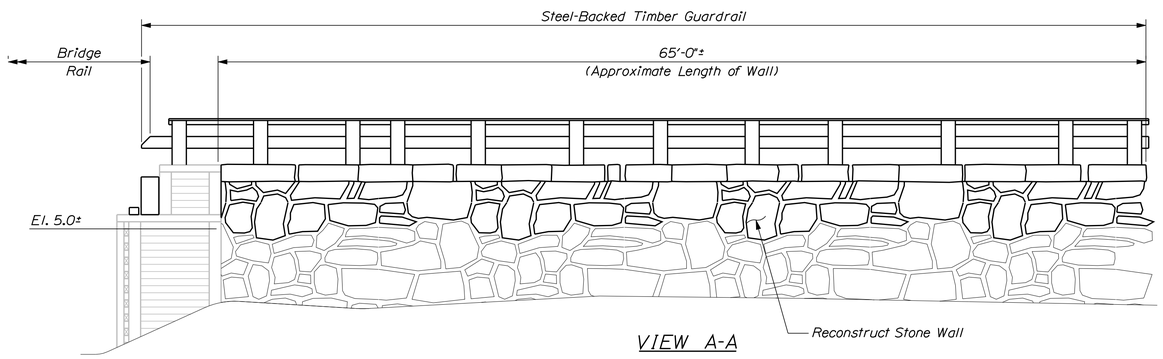

VIEW A-A

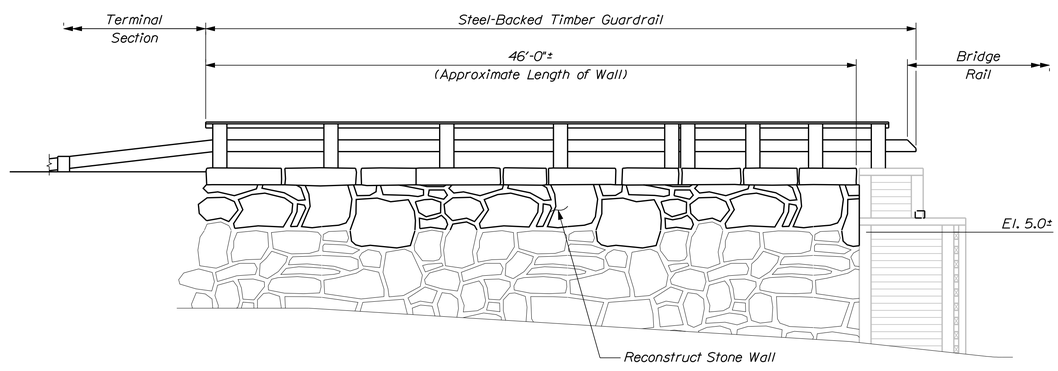

VIEW B-B

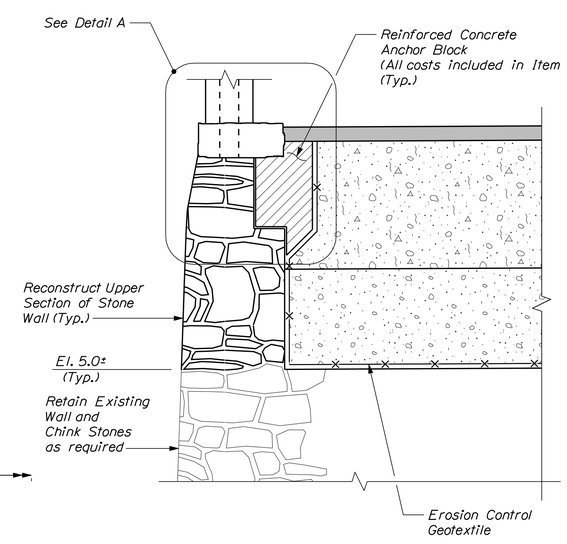

SECTION C-C

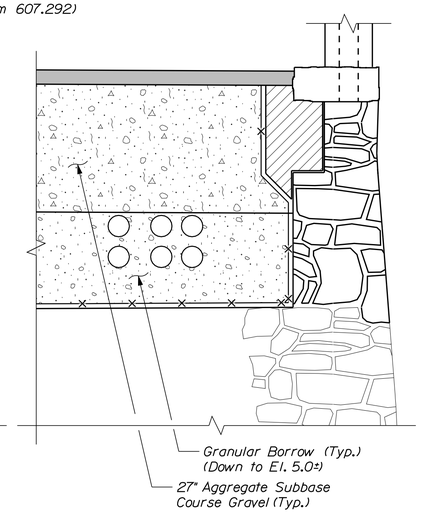

SECTION D-D

NOTE

1. Utilities shown schematically only.

STATE OF MAINE
DEPARTMENT OF TRANSPORTATION

BR-1266(500)X

WIN 12665.00

BRIDGE NO. 3096

BRIDGE PLANS

STATE OF MAINE — Steven M. Hodgdon — LICENSED PROFESSIONAL ENGINEER

Steven M. Hodgdon	SIGNATURE	
11206	P.E. NUMBER	
2/15/2012	DATE	

PROJ. MANAGER	N. BENOIT	BY	DATE
DESIGN-DETAILED	LSG	KDW	2\12
CHECKED-REVIEWED	SMH	LSG	2\12
DESIGN2-DETAILED2	---	---	---
DESIGN3-DETAILED3	---	---	---
REVISIONS 1	---	---	---
REVISIONS 2	---	---	---
REVISIONS 3	---	---	---
REVISIONS 4	---	---	---
FIELD CHANGES	---	---	---

SEWALL'S BRIDGE
YORK RIVER
YORK COUNTY
YORK

MASONRY WALL DETAILS

SHEET NUMBER
24
OF 50

Filename: ...\st\planset\024_ret wall_01.dgn Division: Structures Username: kwentworth Date:2/15/2012

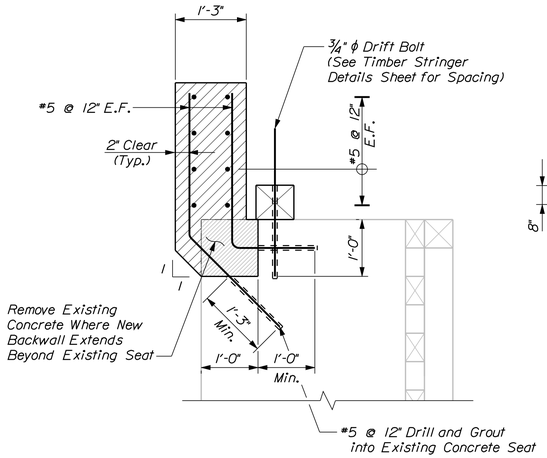

SECTION A-A

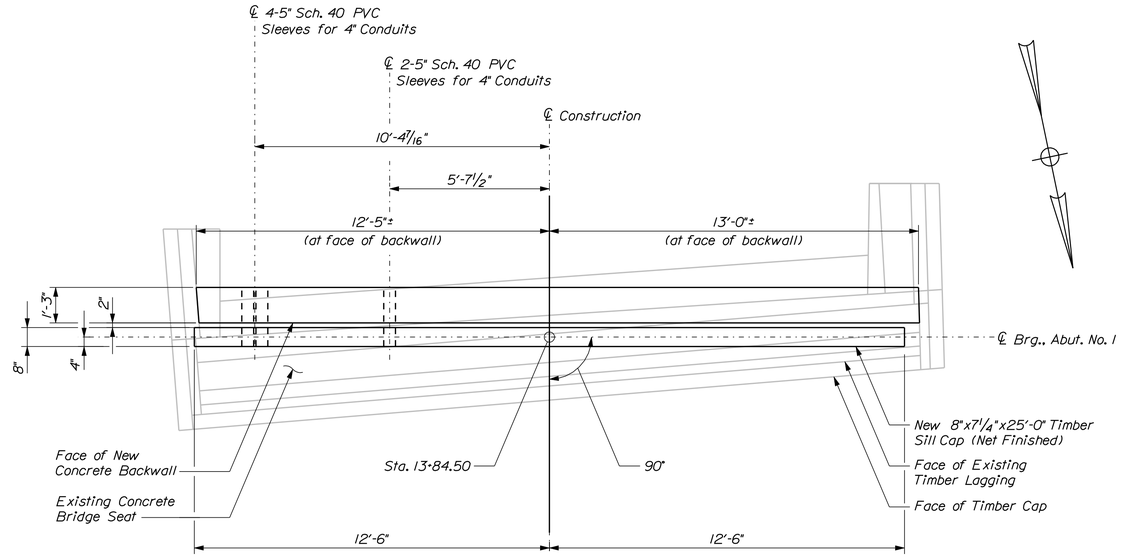

PLAN
(Masonry Retaining Walls not Shown)

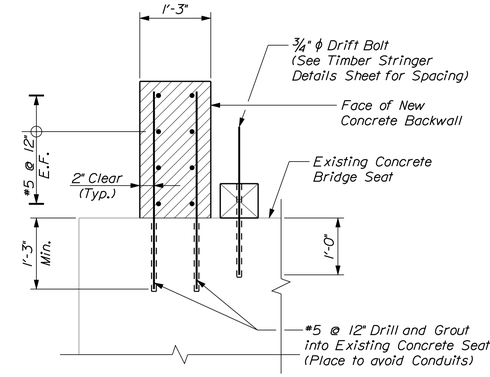

SECTION B-B

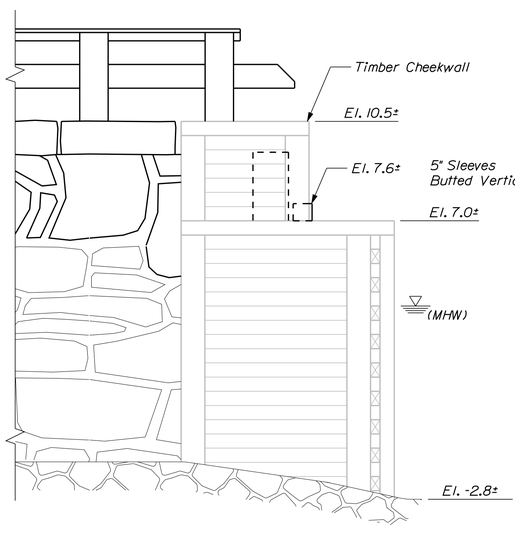

EAST WINGWALL ELEVATION

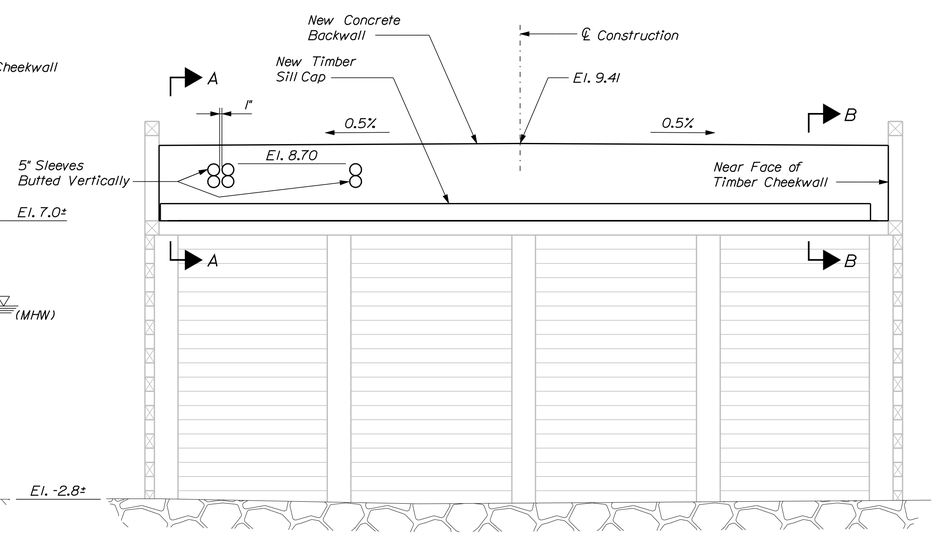

ELEVATION

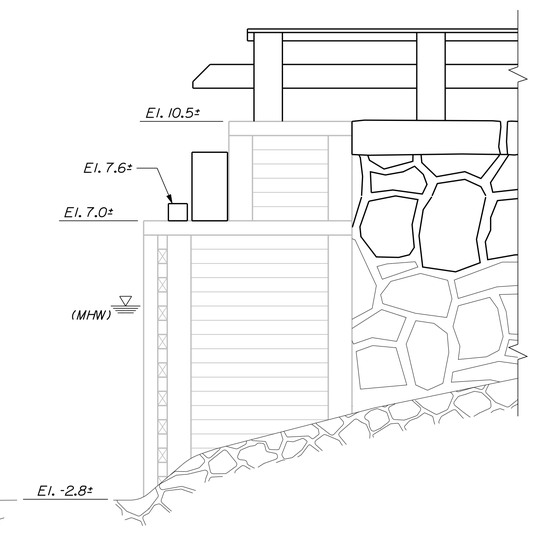

WEST WINGWALL ELEVATION

STATE OF MAINE
DEPARTMENT OF TRANSPORTATION

BR-1266(500)X

WIN 12665.00

BRIDGE NO. 3096

BRIDGE PLANS

STATE OF MAINE
Steven M. Hodgdon
No. 11206
LICENSED
PROFESSIONAL ENGINEER

Steven M. Hodgdon
SIGNATURE

11206
P.E. NUMBER

2/15/2012
DATE

PROJ. MANAGER	N. BENOIT	BY	DATE
DESIGN-DETAILED	LSG	KDW	2\12
CHECKED-REVIEWED	SMH	LSG	2\12
DESIGN2-DETAILED2	---	---	---
DESIGN3-DETAILED3	---	---	---
REVISIONS 1	---	---	---
REVISIONS 2	---	---	---
REVISIONS 3	---	---	---
REVISIONS 4	---	---	---
FIELD CHANGES	---	---	---

YORK

SEWALL'S BRIDGE
YORK RIVER

YORK COUNTY

ABUTMENT NO. 1 DETAILS

SHEET NUMBER
25
OF 50

Filename: ...\st\planset\025_abut 1_01.dgn Division: Structures Username: kwentworth Date:2/15/2012

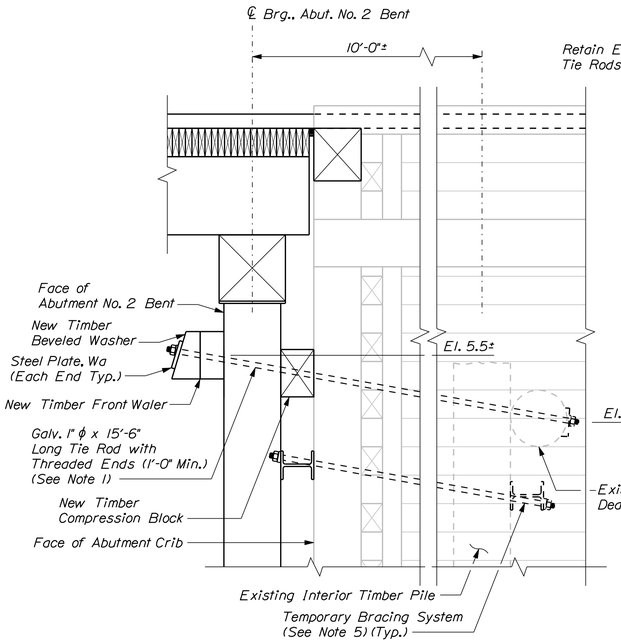

SECTION A-A
(Bridge Rail not Shown)

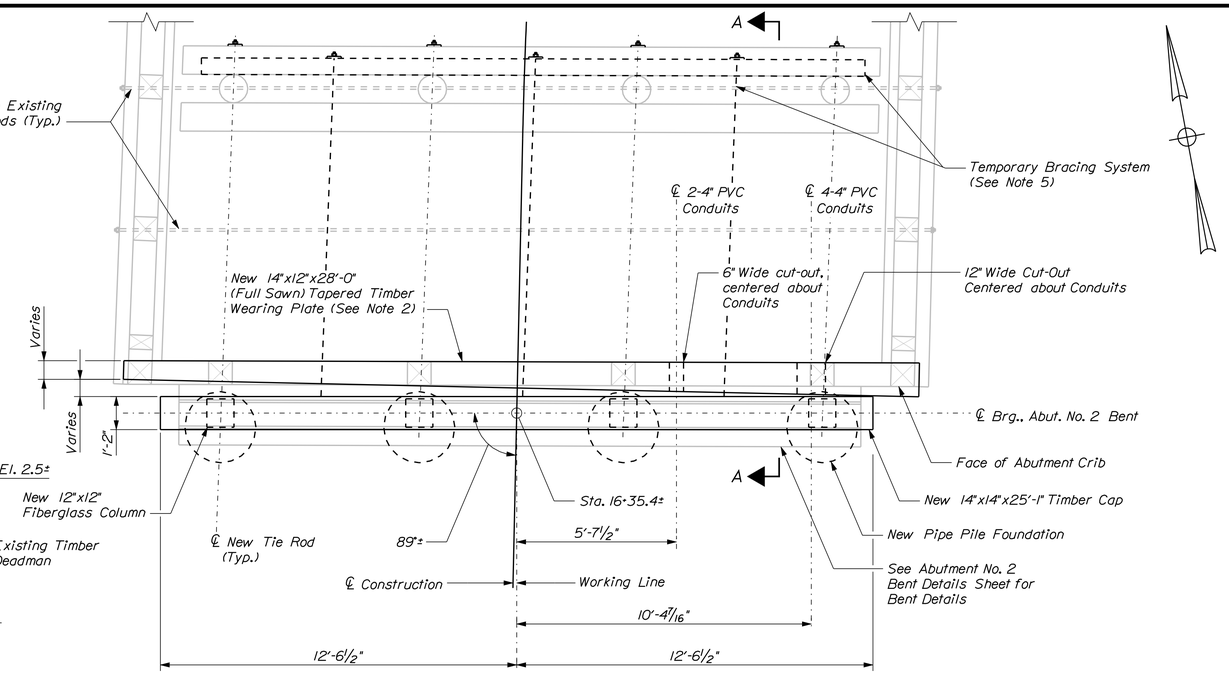

PLAN

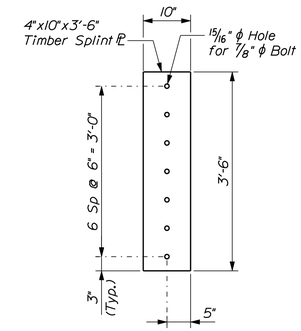

VIEW B-B

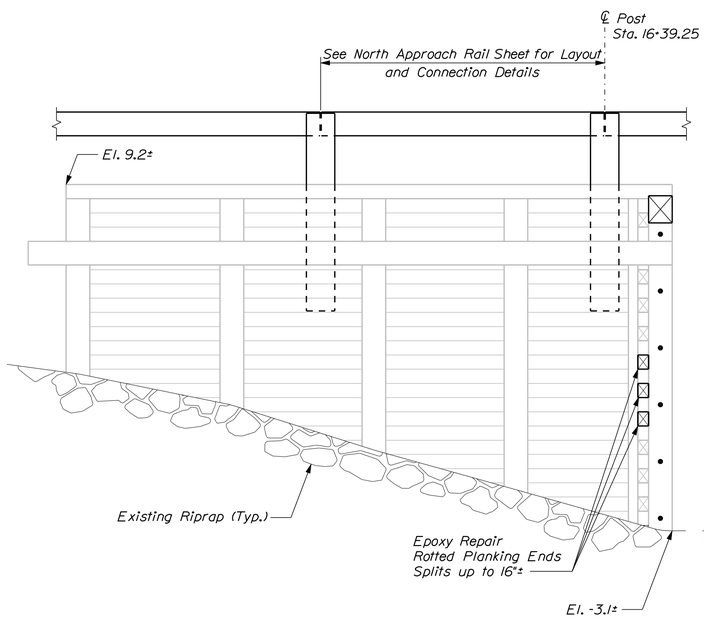

WEST WINGWALL ELEVATION

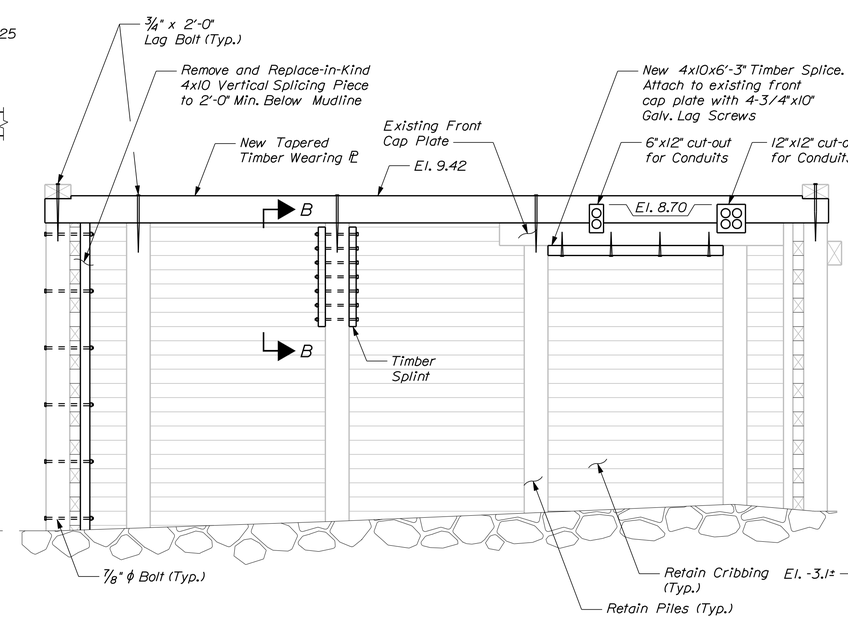

TIMBER CRIB ABUTMENT ELEVATION
(Abutment Bent not shown for clarity)

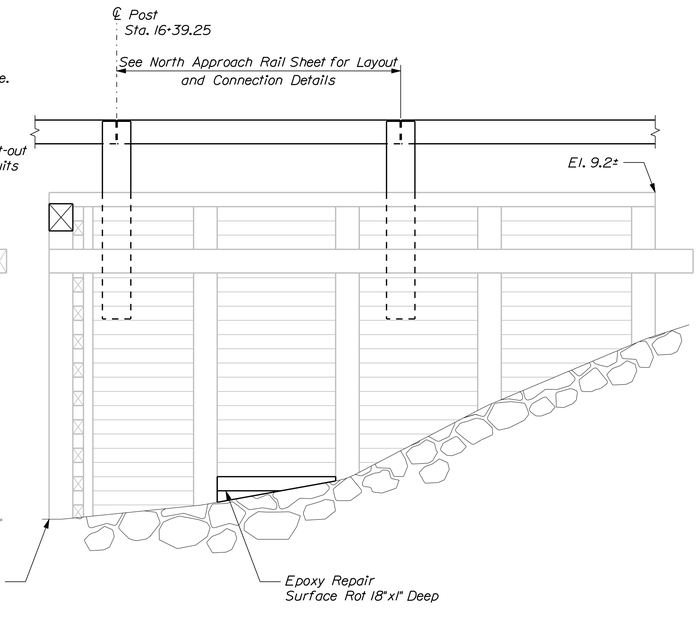

EAST WINGWALL ELEVATION

ABUTMENT NOTES

1. Carefully excavate and backfill timber crib abutment as required to replace metal tie rods. See existing plans for additional details. Excavation is included in item 206.082. Metal tie rods are included in item 528.08.

2. New timber wearing plate must be cut to fit to provide the required joint gap. See Bridge Sheet 37 for Details.

ABUTMENT NOTES (CONTINUED)

3. Repair details shown are based on extent of deterioration observed in 10/09 field inspection. A joint inspection by the Resident and Contractor will be required to determine the extent of the repair at the time of construction.

4. Fill voids between conduit and timber backwall as directed by the Resident.

5. Contractor shall design and install a temporary bracing system for the timber crib abutment to accommodate the proposed rehabilitation work. Concept depicted in these plans is schematic only. All cost shall be included in item 202.19. Removing Existing Bridge.

STATE OF MAINE
DEPARTMENT OF TRANSPORTATION

BR-1266(500)X

WIN 12665.00

BRIDGE PLANS

BRIDGE NO. 3096

STATE OF MAINE — Steven M. Hodgdon — LICENSED PROFESSIONAL ENGINEER

PROJ. MANAGER	N. BENOIT	BY	DATE
DESIGN-DETAILED	LSG	KDW	2\12
CHECKED-REVIEWED	SMH	LSG	2\12
DESIGN2-DETAILED2	---	---	---
DESIGN3-DETAILED3	---	---	---
REVISIONS 1	---	---	---
REVISIONS 2	---	---	---
REVISIONS 3	---	---	---
REVISIONS 4	---	---	---
FIELD CHANGES	---	---	---

Steven M. Hodgdon
SIGNATURE

11206
P.E. NUMBER

2/15/2012
DATE

SEWALL'S BRIDGE
YORK RIVER
YORK COUNTY
YORK

ABUTMENT NO. 2 DETAILS

SHEET NUMBER
26
OF 50

Filename: ...\st\planset\026_abut 2_01.dgn Division: Structures Username: kwentworth Date:2/15/2012

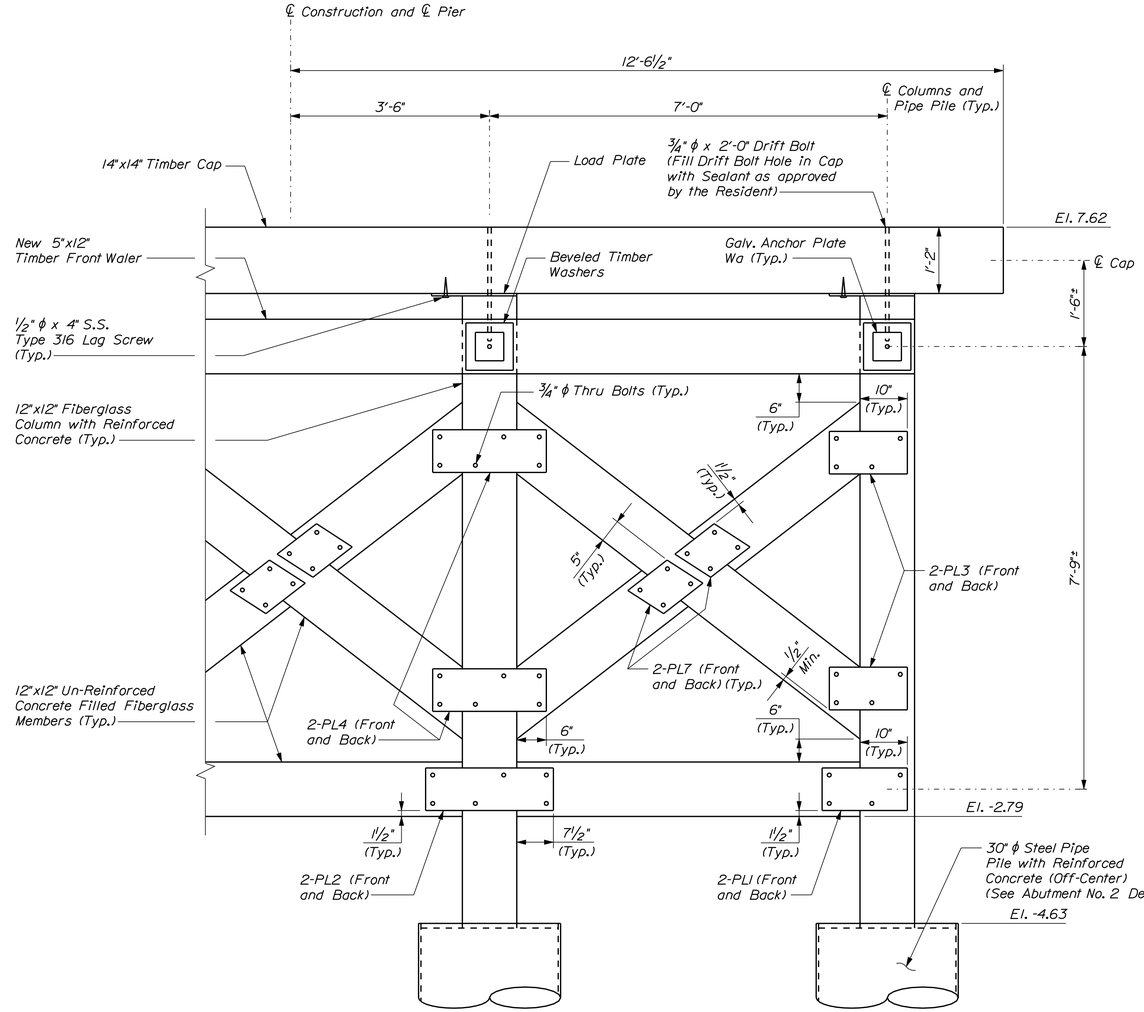

ABUTMENT 2 BENT PARTIAL ELEVATION

Symmetrical about ℄

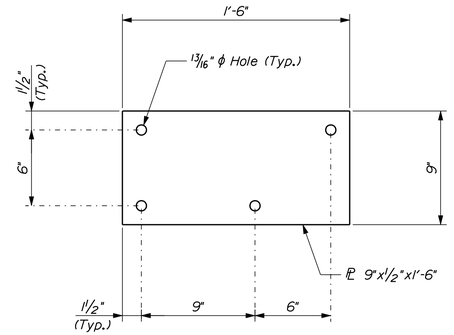

STEEL PL - PL1

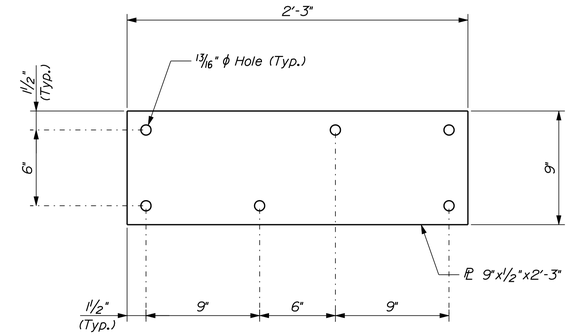

STEEL PL - PL2

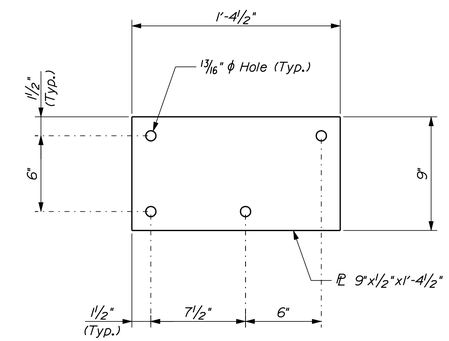

STEEL PL - PL3

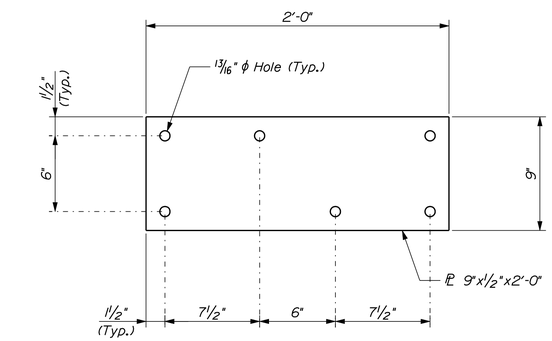

STEEL PL - PL4

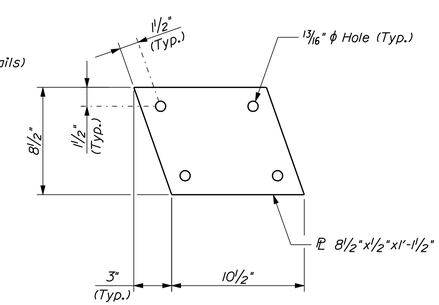

STEEL PL - PL7

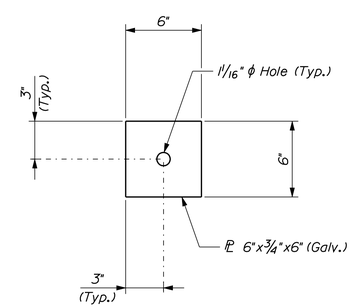

STEEL PL - Wa

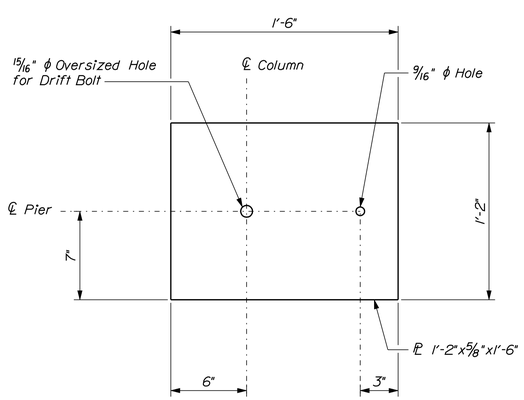

LOAD PLATE - ⅝" THICK

(Pier Bents 11 & 12)

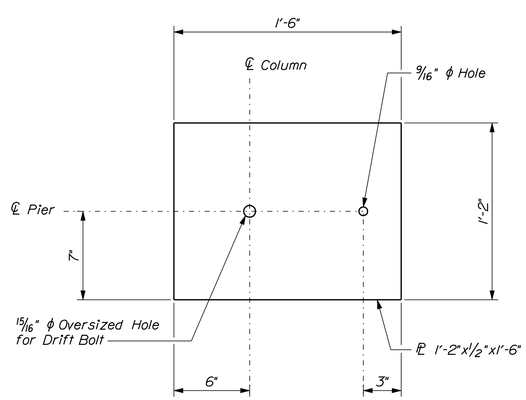

LOAD PLATE - ½" THICK

(Pier Bents 1-10, 13 & Abut. No. 2 Bent)

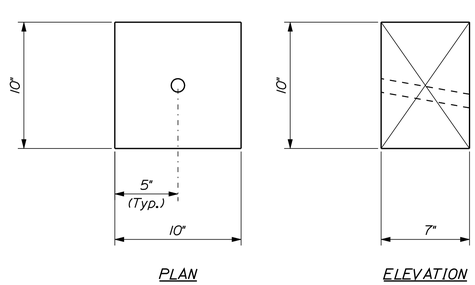

PLAN ELEVATION

TIMBER COMPRESSION BLOCK

(See Bridge Sheet 26, Section A-A for Location)

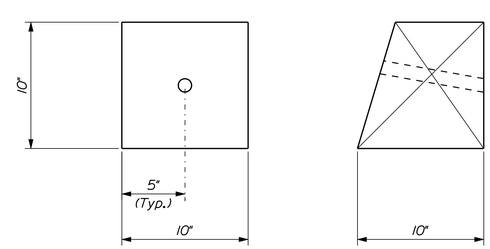

PLAN ELEVATION (Bevel to Fit Existing Tie Rods)

TIMBER BEVELED WASHER

STATE OF MAINE
DEPARTMENT OF TRANSPORTATION

BR-1266(500)X

WIN 12665.00

BRIDGE NO. 3096

BRIDGE PLANS

STATE OF MAINE — Steven M. Hodgdon — 11206 — LICENSED PROFESSIONAL ENGINEER

Steven M. Hodgdon			
SIGNATURE			
11206			
P.E. NUMBER			
2/15/2012			
DATE			

PROJ. MANAGER	N. BENOIT		
DESIGN-DETAILED	LSG	KDW	2\12
CHECKED-REVIEWED	SMH	LSG	2\12
DESIGN2-DETAILED2	...	...	...
DESIGN3-DETAILED3	...	...	...
REVISIONS 1	...	...	...
REVISIONS 2	...	...	...
REVISIONS 3	...	...	...
REVISIONS 4	...	...	...
FIELD CHANGES	...	...	...

SEWALL'S BRIDGE
YORK RIVER
YORK COUNTY
YORK

ABUTMENT NO. 2
BENT DETAILS

SHEET NUMBER

27

OF 50

Filename: ...\st\planset\027_abut 2_02.dgn Division: Structures Username: kwentworth Date:2/15/2012

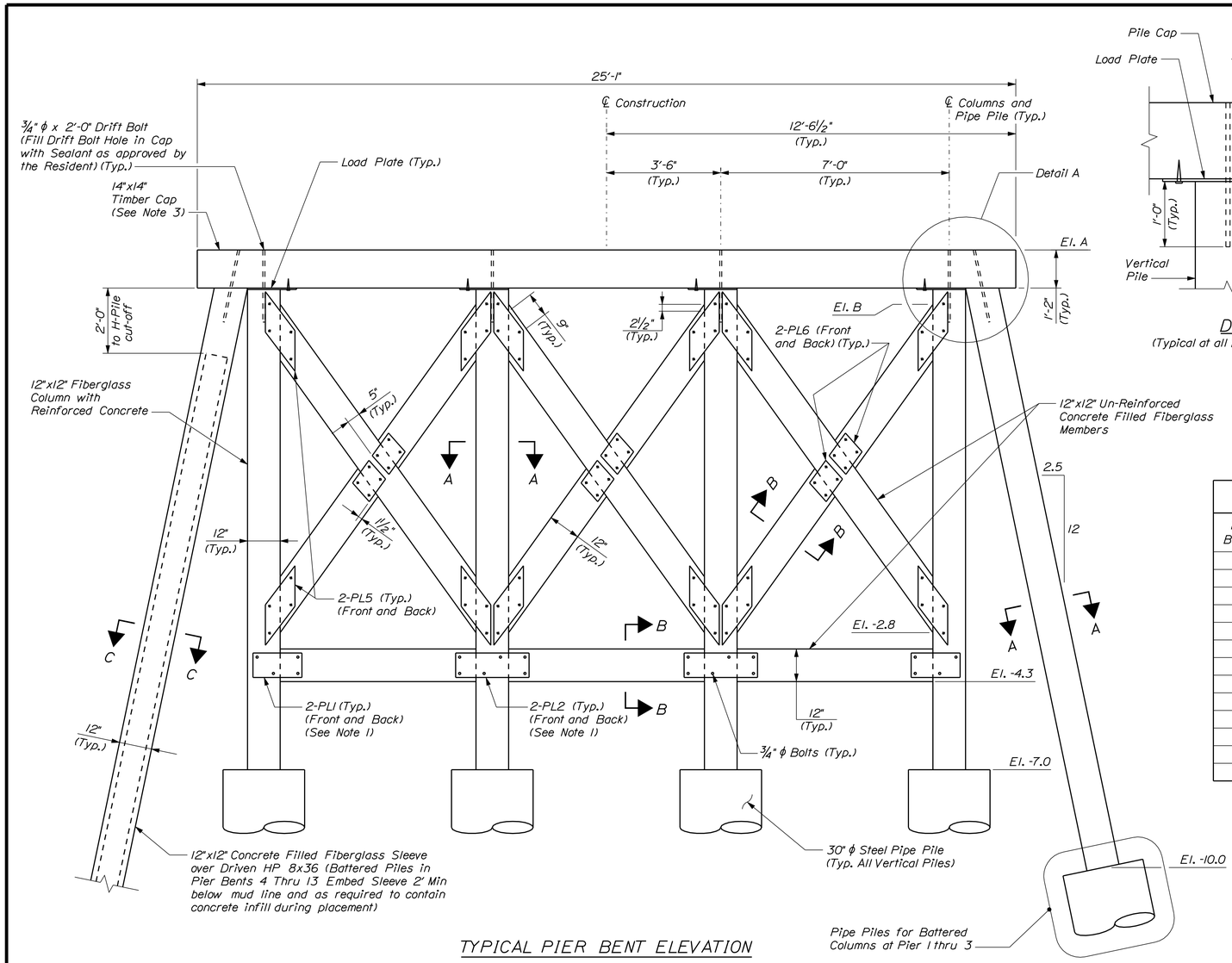

TYPICAL PIER BENT ELEVATION

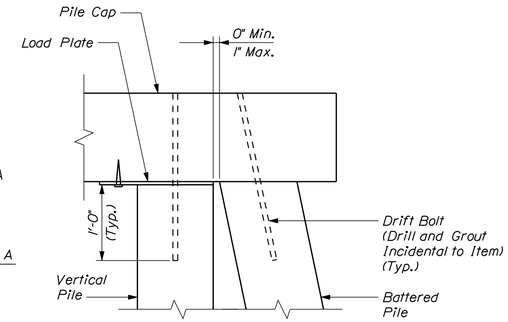

DETAIL A
(Typical at all Battered Pile Locations)

TABLE OF ELEVATIONS		
Pier Bent No.	Top of Cap El. A (ft)	Top of Cross Brace El. B (ft)
1	7.84	6.17
2	8.13	6.46
3	8.43	6.76
4	8.67	7.01
5	8.85	7.19
6	9.04	7.38
7	9.10	7.44
8	9.06	7.40
9	8.98	7.31
10	8.86	7.20
11	8.66	6.99
12	8.20	6.53
13	7.92	6.25

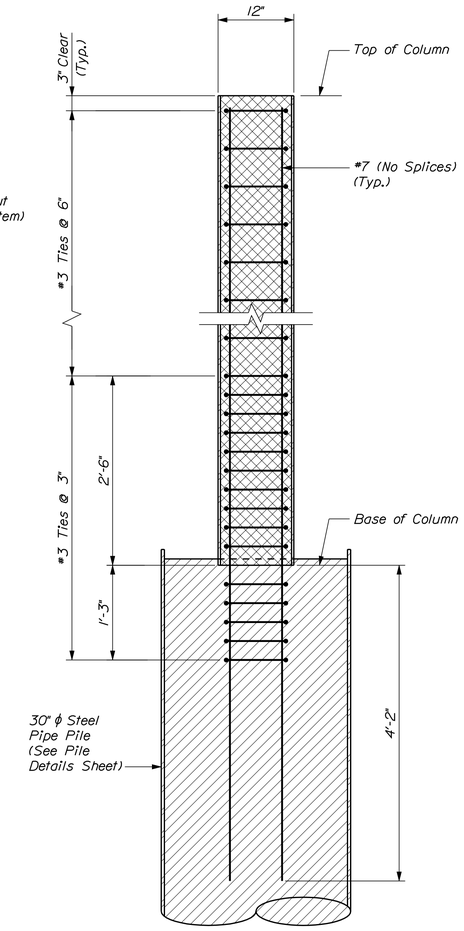

TYPICAL COLUMN DETAIL
(All Vertical Columns; and Battered Columns in Pier 1 Thru 3)

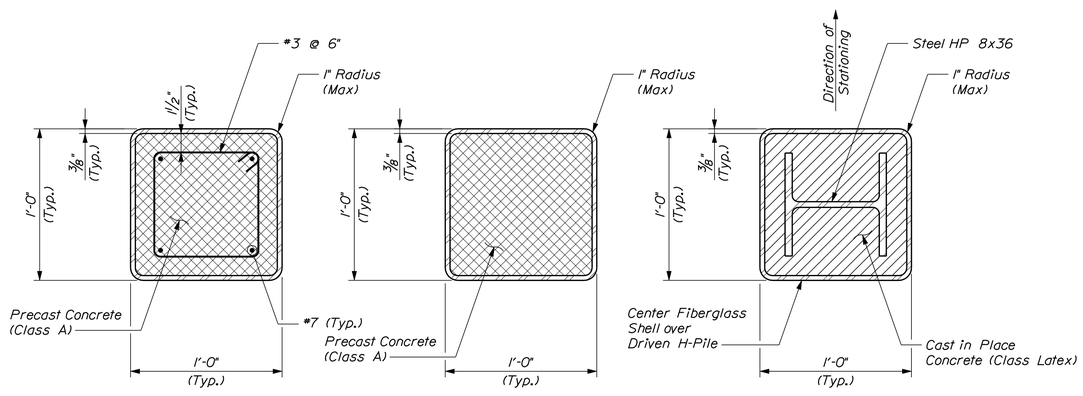

SECTION A-A
(Typical All Vertical Columns and Pier 1 Thru 3 Battered Columns)

SECTION B-B
(Un-Reinforced Section)
(Typical All Cross Brace and Struts)

SECTION C-C
(Typical all Battered Piles except for Pier 1 Thru 3)
(See Bridge Sheet 30 for more Details)

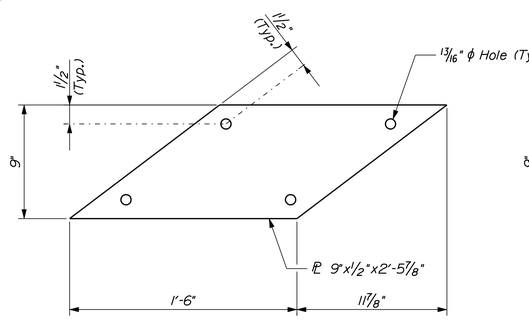

PL5

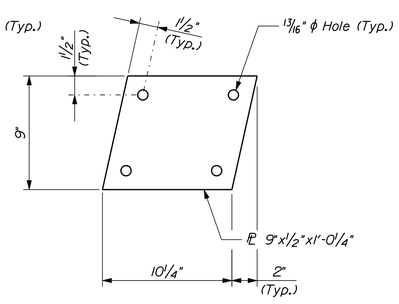

PL6

NOTES

1. See Abutment No. 2 Bent Details for PLI and PL2 Details.
2. Factored Column design moment = 43 k-ft.
3. Pier Bents 1 thru 10, 13 and Abut No. 2 Bent have a 14"x14"x25'-1" solid sawn timber pile cap. Pier Bents 11 and 12 have a 14"x14"x25'-1" glulam timber pile cap.

STATE OF MAINE
DEPARTMENT OF TRANSPORTATION

BR-1266(500)X

WIN 12665.00

BRIDGE NO. 3096

BRIDGE PLANS

STATE OF MAINE — Steven M. Hodgdon — No. 11206 — LICENSED PROFESSIONAL ENGINEER

PROJ. MANAGER	N. BENOIT	BY	DATE
DESIGN-DETAILED	LSG	KDW	2\12
CHECKED-REVIEWED	SMH	LSG	2\12
DESIGN2-DETAILED2	---	---	---
DESIGN3-DETAILED3	---	---	---
REVISIONS 1	---	---	---
REVISIONS 2	---	---	---
REVISIONS 3	---	---	---
REVISIONS 4	---	---	---
FIELD CHANGES	---	---	---

Steven M. Hodgdon
SIGNATURE
11206
P.E. NUMBER
2/15/2012
DATE

SEWALL'S BRIDGE
YORK RIVER
YORK COUNTY
YORK

PIER BENT DETAILS

SHEET NUMBER
28
OF 50

Filename: ...\planset\028_pier bent_01.dgn Division: Structures Username: kwentworth Date:2/15/2012

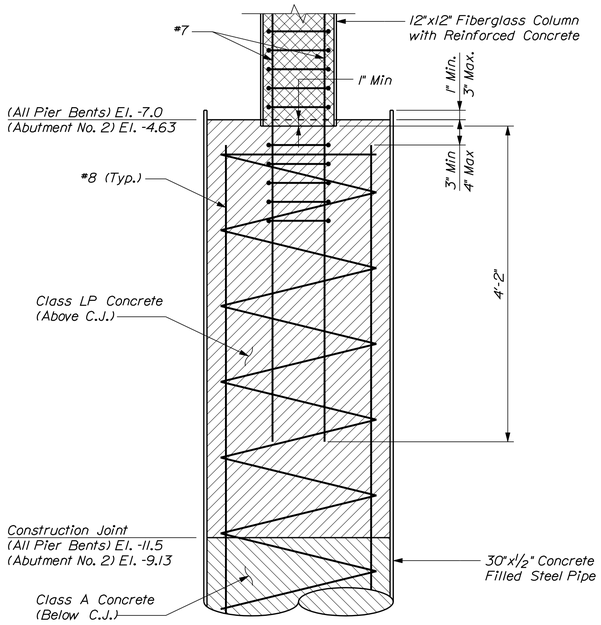

VERTICAL PIPE PILE ATTACHMENT DETAIL
(All Vertical Piles)

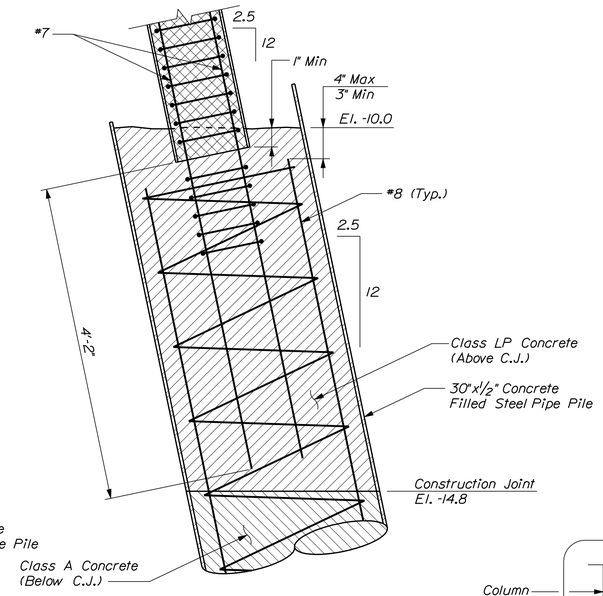

BATTERED PIPE PILE ATTACHMENT DETAIL
(Pier 1 thru 3 Only)

PIPE PILE CONNECTION DETAILS

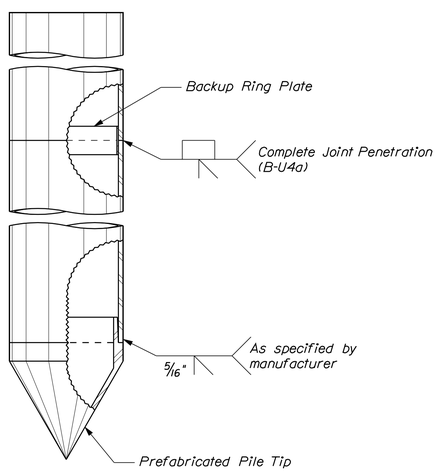

PIPE PILE DETAIL

Structure (Bent No.)	Sta.	Minimum Pile Tip Elevation (FT NAVD 88)
1	14+01.5	-32
2	14+18.5	-40
3	14+35.5	-47
4	14+52.5	-52
5	14+69.5	-54
6	14+86.5	-55
7	15+03.5	-64
8	15+20.5	-68
9	15+37.5	-68
10	15+54.5	-67
11	15+71.5	-60
12	16+01.5	-48
13	16+18.5	-42
Abut. No. 2	16+35.4	-31

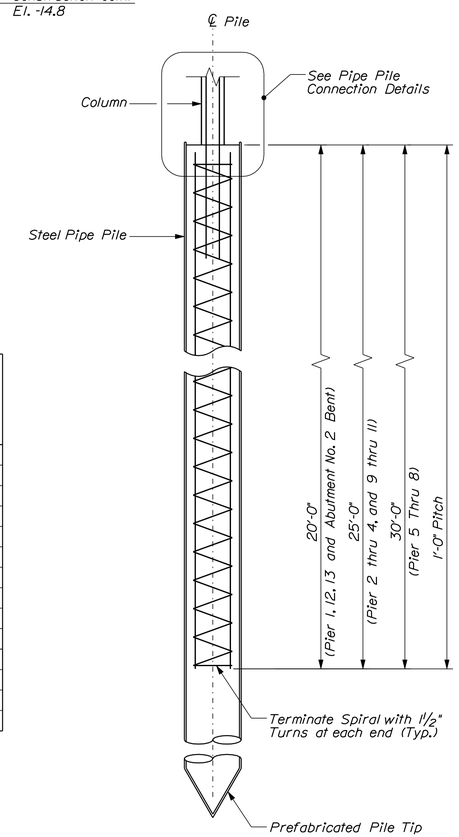

PIPE PILE ELEVATION
(Ties in Column not shown for clarity)

PIPE PILE NOTES

1. The maximum factored pile load is 155 kips for Piles at Piers 11 and 12 and 105 kips for Piles elsewhere.

2. Pipe pile material shall be ASTM A 252, Grade 3. (Fy = 45 ksi Min.)

3. All pipe piles shall be equipped with a pile tip in accordance with Standard Specifications Section 501.10, Prefabricated Pile Tips.

4. Piles shall not be out of position more than 2 inches in any direction.

5. The Contractor shall perform and submit a wave equation analysis for review and acceptance by the Resident. The maximum allowable driving stress is 0.90 times Fy. The submittal analyses shall include the proposed stopping criteria based on the wave equation analysis and the proposed driving system. The stopping criteria shall include the blows per inch and the number of 1-in. intervals at which pile installation may be terminated. The cost of performing the wave equation analysis will be considered incidental to Item No. 501.92, Pile Driving Equipment Mobilization.

6. The Contractor shall perform four (4) dynamic load tests to confirm the nominal resistance (ultimate capacity) of the piles. One test shall be performed at each of the following locations: Pier 1, 8, 11, and 13. The required nominal resistance for the pile is the factored axial pile load divided by a resistance factor of 0.65 per LRFD Specifications. The dynamic test shall be performed on the first production pile driven.

7. All pipe piles shall be driven to the minimum pile tip elevation shown in the table or deeper and shall achieve a nominal resistance (ultimate capacity) of 238.5 kips for piles at piers 11 and 12 and 161.5 kips for piles at all other bents.

8. Lap lengths for spirals shall be 36 inches.

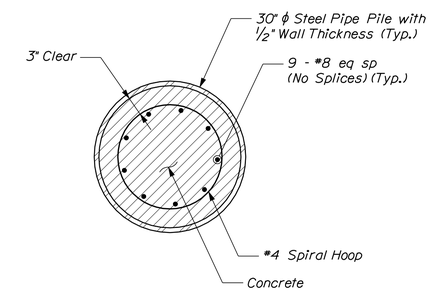

TYPICAL REINFORCED PIPE PILE SECTION

STATE OF MAINE
DEPARTMENT OF TRANSPORTATION

BR-1266(500)X

WIN 12665.00

BRIDGE NO. 3096

BRIDGE PLANS

STATE OF MAINE — Steven M. Hodgdon — 11206 — LICENSED PROFESSIONAL ENGINEER

Steven M. Hodgdon
SIGNATURE
11206
P.E. NUMBER
2/15/2012
DATE

		BY	DATE
PROJ. MANAGER	N. BENOIT		
DESIGN-DETAILED	LSG	KDW	2\12
CHECKED-REVIEWED	SMH	LSG	2\12
DESIGN2-DETAILED2	---	---	---
DESIGN3-DETAILED3	---	---	---
REVISIONS 1	---	---	---
REVISIONS 2	---	---	---
REVISIONS 3	---	---	---
REVISIONS 4	---	---	---
FIELD CHANGES	---	---	---

SEWALL'S BRIDGE
YORK RIVER
YORK COUNTY
YORK

PILE DETAILS (1 OF 2)

SHEET NUMBER
29
OF 50

Filename: ...\plonset\029_pier bent_02.dgn Division: Structures Username: kwentworth Date:2/15/2012

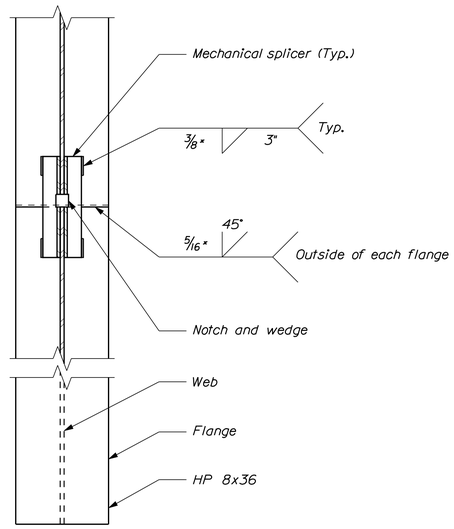

H - PILE DETAIL

* Or as specified by the manufacturer

Structure (Bent No.)	Sta.	* Minimum Pile Tip Elevation (FT NAVD 88)
4	14+52.5	-37.0
5	14+69.5	-39.5
6	14+86.5	-41.0
7	15+03.5	-42.0
8	15+20.5	-39.5
9	15+37.5	-37.0
10	15+54.5	-35.5
11	15+71.5	-32.0
12	16+01.5	-25.0
13	16+18.5	-20.0

* Minimum tip elevations are based on 10' below estimated scour depth, (20' below mudline) for piles at bents 4 through 10. Minimum tip elevations for piles at bents 11 through 13 are based on 10' below top of marine clay.

STEEL H-PILE NOTES

1. H-pile material shall be ASTM A 572, Grade 50.
2. All steel H-piles shall be battered 2 1/2 in./ft as shown in the typical pier bent elevation.
3. Pile tips are not required for H-Piles.

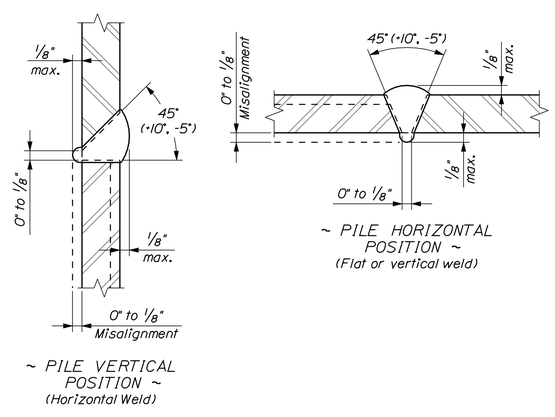

H-PILE SPLICE DETAILS

STATE OF MAINE
DEPARTMENT OF TRANSPORTATION

BR-1266(500)X

WIN 12665.00

BRIDGE NO. 3096

BRIDGE PLANS

STATE OF MAINE — Steven M. Hodgdon — No. 11206 — LICENSED PROFESSIONAL ENGINEER

PROJ. MANAGER	N. BENOIT	BY	DATE
DESIGN-DETAILED	LSG	KDW	2\12
CHECKED-REVIEWED	SMH	LSG	2\12
DESIGN2-DETAILED2	---	---	---
DESIGN3-DETAILED3	---	---	---
REVISIONS 1	---	---	---
REVISIONS 2	---	---	---
REVISIONS 3	---	---	---
REVISIONS 4	---	---	---
FIELD CHANGES	---	---	---

Steven M. Hodgdon
SIGNATURE
11206
P.E. NUMBER
2/15/2012
DATE

SEWALL'S BRIDGE
YORK RIVER
YORK COUNTY
YORK

PILE DETAILS (2 OF 2)

SHEET NUMBER
30
OF 50

Filename: ...\planset\030_pier bent_03.dgn Division: Structures Username: kwentworth Date:2/15/2012

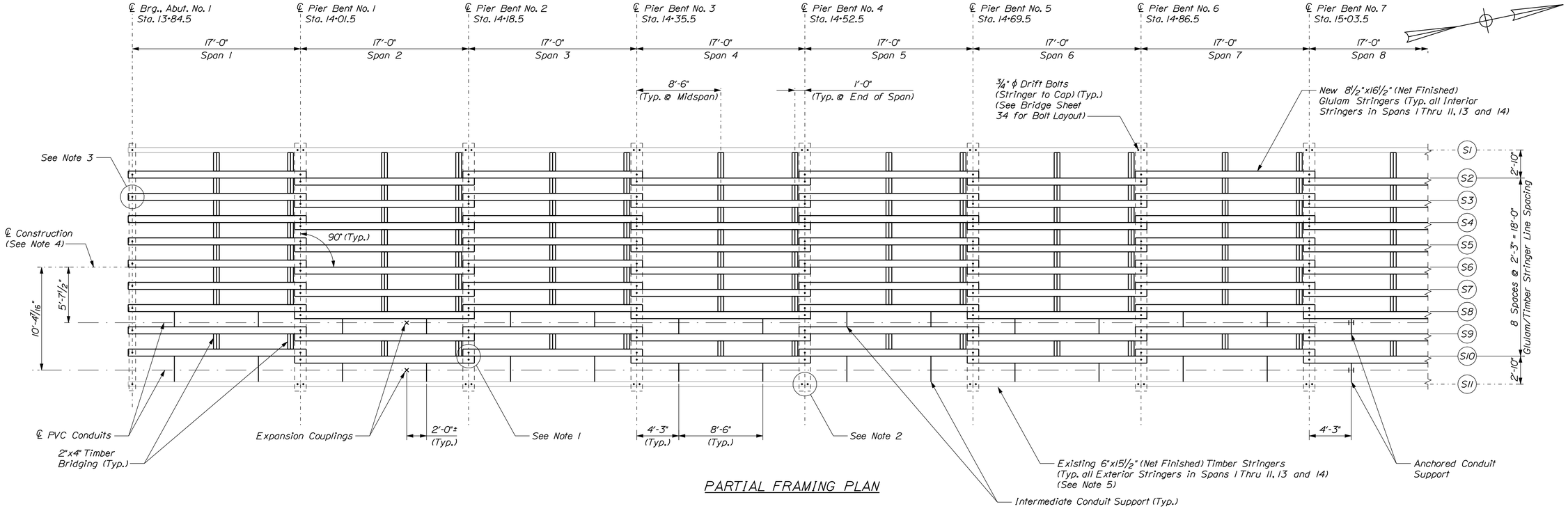

PARTIAL FRAMING PLAN

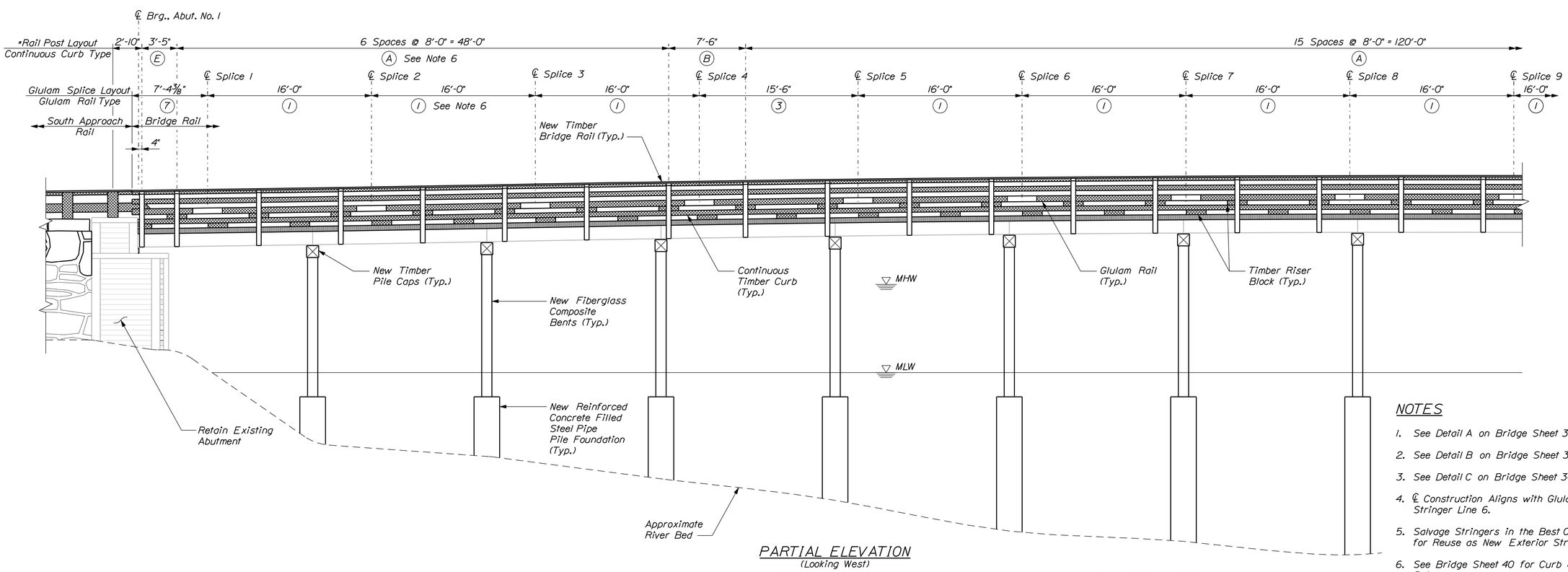

PARTIAL ELEVATION
(Looking West)
(Battered Piles not shown)

* Measured at Face of Glulam Rail

NOTES

1. See Detail A on Bridge Sheet 34.
2. See Detail B on Bridge Sheet 34.
3. See Detail C on Bridge Sheet 34.
4. ℄ Construction Aligns with Glulam Stringer Line 6.
5. Salvage Stringers in the Best Condition for Reuse as New Exterior Stringers.
6. See Bridge Sheet 40 for Curb and Rail types.

STATE OF MAINE
DEPARTMENT OF TRANSPORTATION

BR-1266(500)X

WIN 12665.00

BRIDGE NO. 3096

BRIDGE PLANS

STATE OF MAINE — Steven M. Hodgdon — LICENSED PROFESSIONAL ENGINEER — 11206

Steven M. Hodgdon	SIGNATURE	
11206	P.E. NUMBER	
2/15/2012	DATE	

PROJ. MANAGER	N. BENOIT	BY	DATE
DESIGN-DETAILED	LSG	KDW	2\12
CHECKED-REVIEWED	SMH	LSG	2\12
DESIGN2-DETAILED2	---	---	---
DESIGN3-DETAILED3	---	---	---
REVISIONS 1	---	---	---
REVISIONS 2	---	---	---
REVISIONS 3	---	---	---
REVISIONS 4	---	---	---
FIELD CHANGES	---	---	---

SEWALL'S BRIDGE
YORK RIVER
YORK COUNTY
YORK

FRAMING PLAN AND ELEVATION (1 OF 2)

SHEET NUMBER
31
OF 50

Filename: ...\st\planset\031_Frame_01.dgn Division: Structures Username: kwentworth Date:2/15/2012

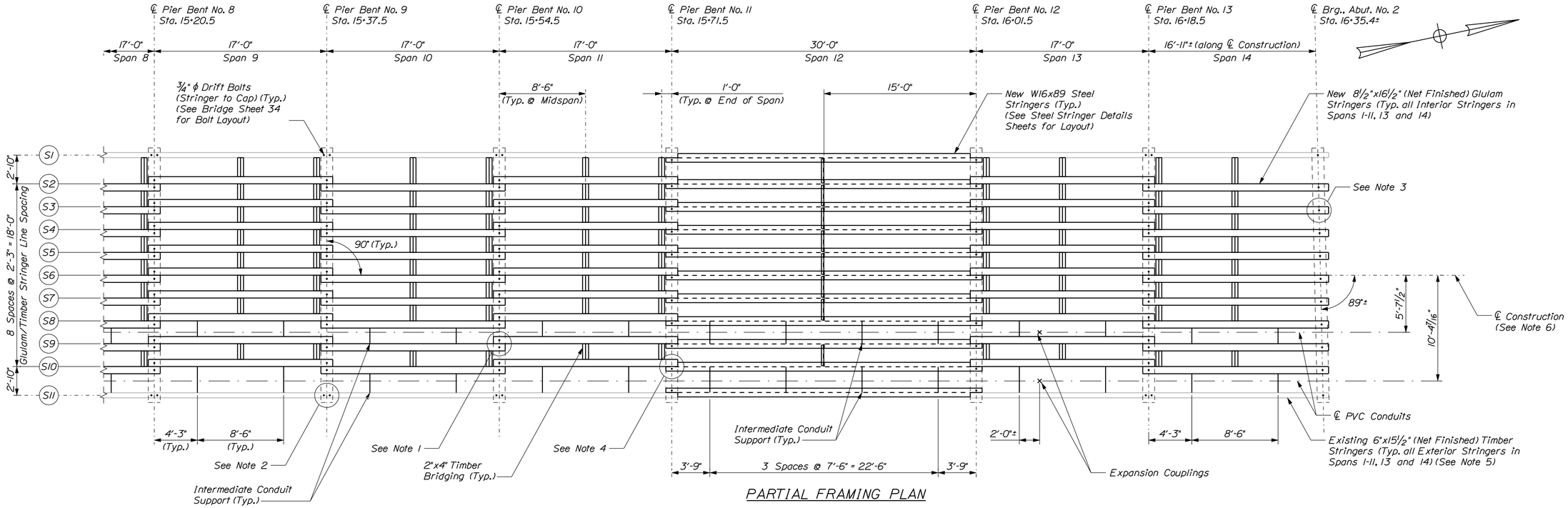

PARTIAL FRAMING PLAN

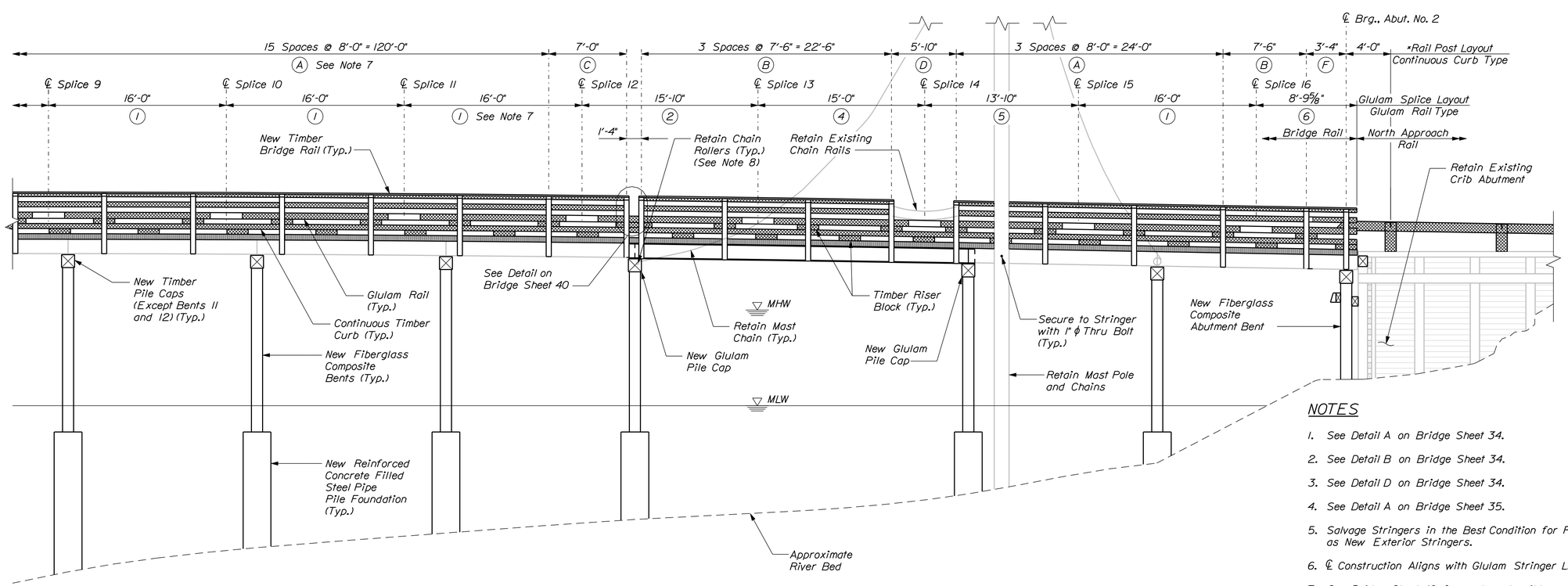

PARTIAL ELEVATION
(Looking West)
(Battered Piles not shown)

* Measured at Face of Glulam Rail

NOTES

1. See Detail A on Bridge Sheet 34.
2. See Detail B on Bridge Sheet 34.
3. See Detail D on Bridge Sheet 34.
4. See Detail A on Bridge Sheet 35.
5. Salvage Stringers in the Best Condition for Reuse as New Exterior Stringers.
6. ℄ Construction Aligns with Glulam Stringer Line 6.
7. See Bridge Sheet 40 for curb and rail types.
8. Secure existing chains and rollers to new pier caps as approved by the Resident.

STATE OF MAINE
DEPARTMENT OF TRANSPORTATION

BR-1266(500)X

WIN 12665.00

BRIDGE NO. 3096

BRIDGE PLANS

STATE OF MAINE — Steven M. Hodgdon — LICENSED PROFESSIONAL ENGINEER — 11206

Steven M. Hodgdon		
SIGNATURE		
11206		
P.E. NUMBER		
2/15/2012		
DATE		

PROJ. MANAGER	N. BENOIT	BY	DATE
DESIGN-DETAILED	LSG	KDW	2\12
CHECKED-REVIEWED	SMH	LSG	2\12
DESIGN2-DETAILED2	---	---	---
DESIGN3-DETAILED3	---	---	---
REVISIONS 1	---	---	---
REVISIONS 2	---	---	---
REVISIONS 3	---	---	---
REVISIONS 4	---	---	---
FIELD CHANGES	---	---	---

SEWALL'S BRIDGE
YORK RIVER
YORK COUNTY
YORK

FRAMING PLAN AND ELEVATION (2 OF 2)

SHEET NUMBER
32
OF 50

Filename: ...\st\planset\032_Frame_02.dgn Division: Structures Username: kwentworth Date:2/15/2012

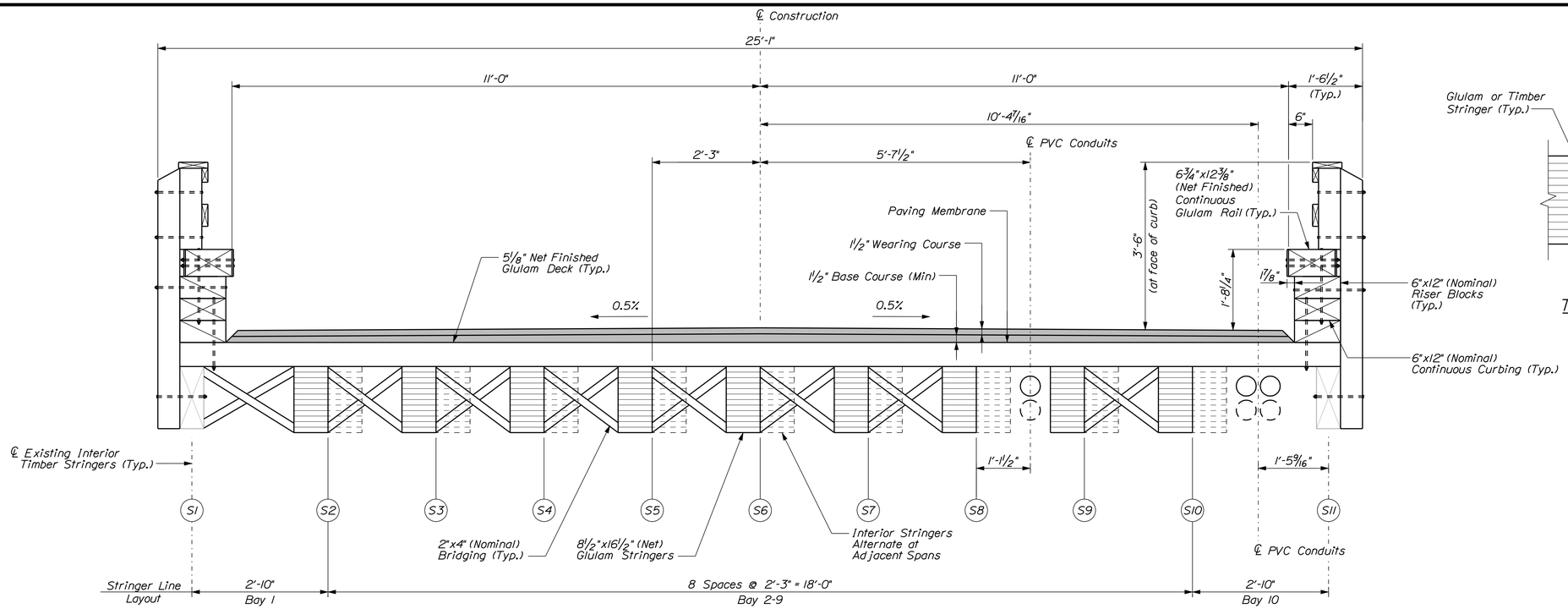

GLULAM STRINGER SPANS

(Looking North, odd Spans Shown)
(Spans 1 Thru 11, 13, 14)

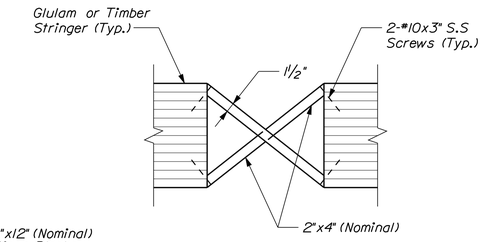

TIMBER BRIDGING

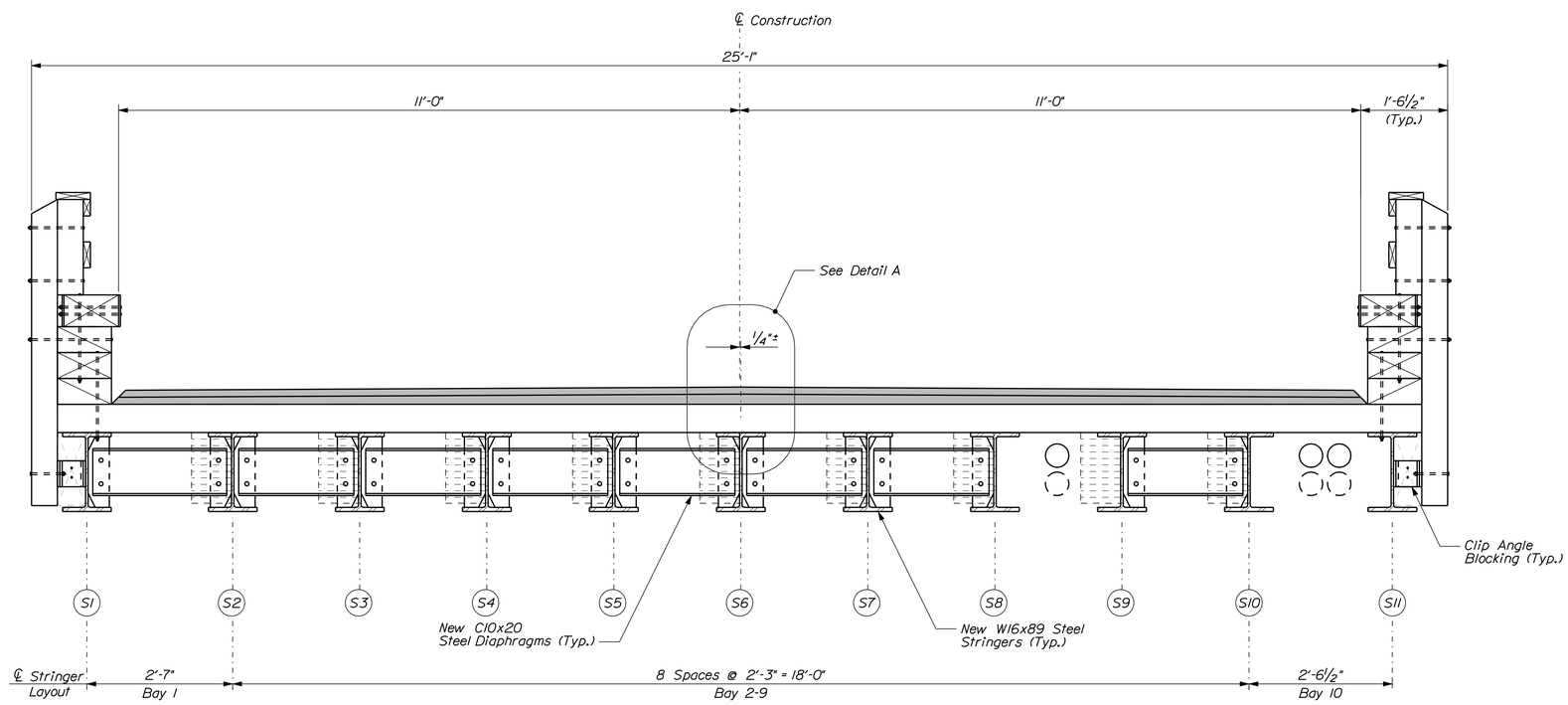

STEEL STRINGER SPAN

(Looking North)
(Span 12)

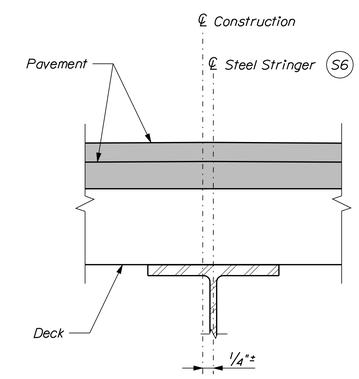

DETAIL A

STATE OF MAINE
DEPARTMENT OF TRANSPORTATION

BR-1266(500)X

WIN 12665.00

BRIDGE NO. 3096

BRIDGE PLANS

STATE OF MAINE — Steven M. Hodgdon — No. 11206 — LICENSED PROFESSIONAL ENGINEER

Steven M. Hodgdon

SIGNATURE		
11206		
P.E. NUMBER		
2/15/2012		
DATE		

PROJ. MANAGER	N. BENOIT		
DESIGN-DETAILED	LSG	KDW	2\12
CHECKED-REVIEWED	SMH	LSG	2\12
DESIGN2-DETAILED2	---	---	---
DESIGN3-DETAILED3	---	---	---
REVISIONS 1	---	---	---
REVISIONS 2	---	---	---
REVISIONS 3	---	---	---
REVISIONS 4	---	---	---
FIELD CHANGES	---	---	---

SEWALL'S BRIDGE
YORK RIVER
YORK COUNTY
YORK

BRIDGE TYPICAL SECTIONS

SHEET NUMBER

33

OF 50

Filename: ...\st\planset\033_Typ Bridge.dgn Division: Structures Username: kwentworth Date:2/15/2012

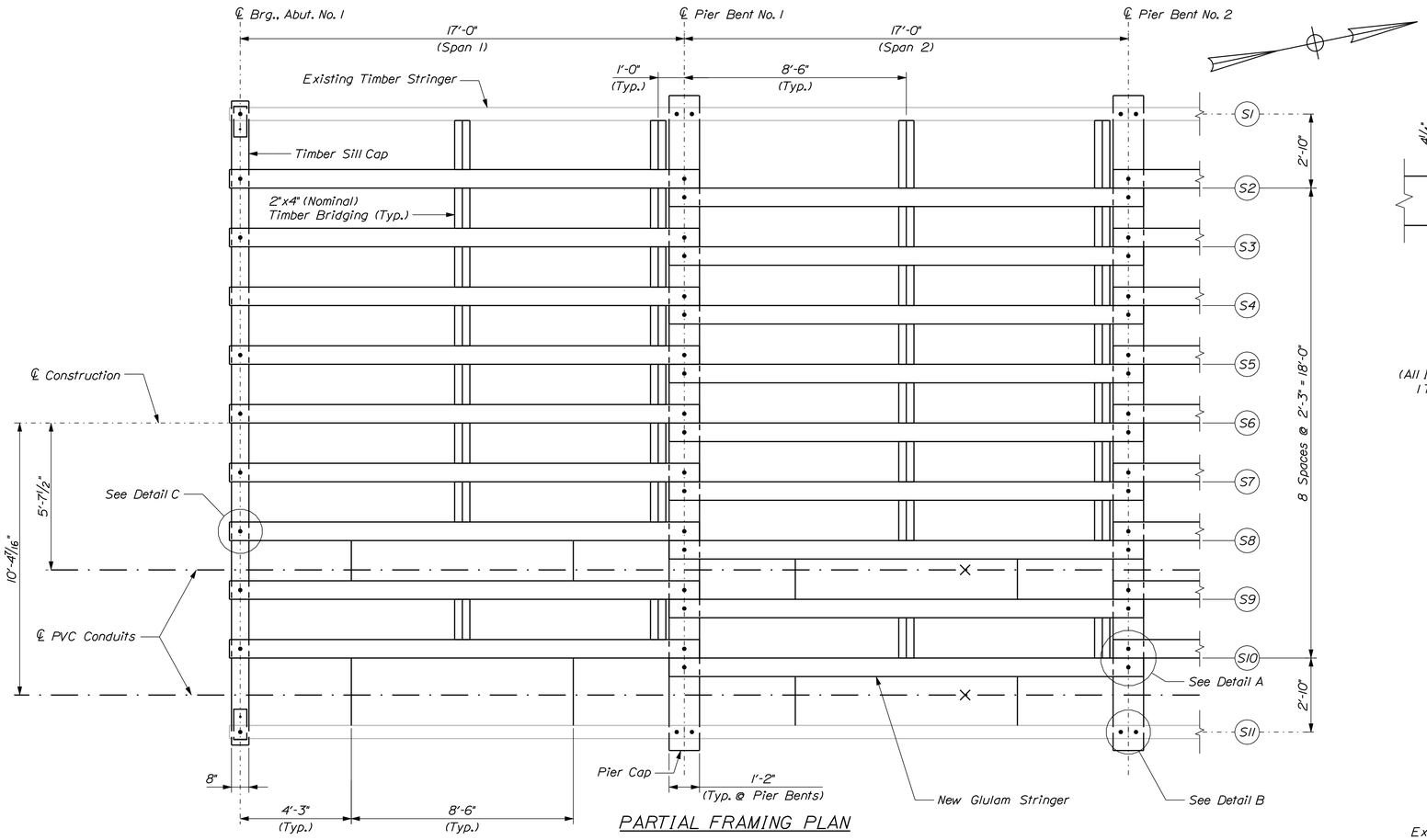

PARTIAL FRAMING PLAN

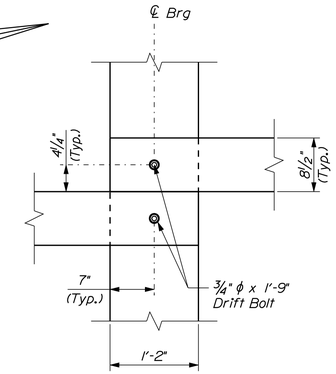

DETAIL A

(All Interior Stringers at Pier Bents 1 Thru 10, 13 and Abut. 2 Bent)

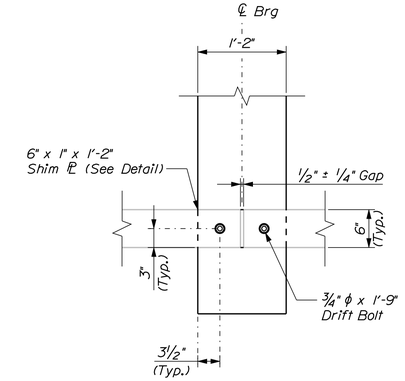

DETAIL B

(All Exterior Stringers at Pier Bents 1 Thru 10, 13 and Abut. 2 Bent)

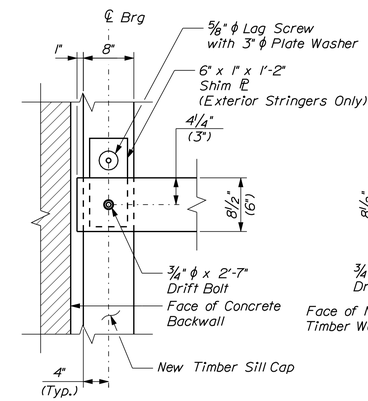

DETAIL C

(Abutment No. 1 Sill Cap)
(Interior Stringer Shown.
Exterior Stringer in Parenthesis)

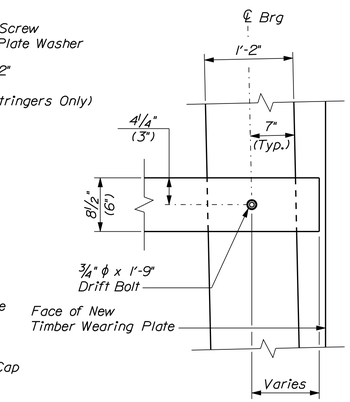

DETAIL D

(Abutment No. 2 Bent)
(Interior Stringer Shown.
Exterior Stringer in Parenthesis)

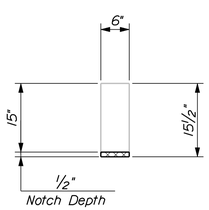

END VIEW

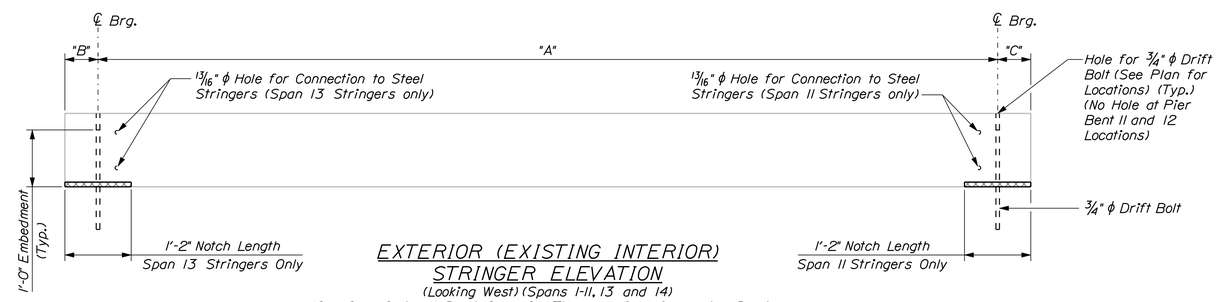

EXTERIOR (EXISTING INTERIOR)
STRINGER ELEVATION

(Looking West) (Spans 1-11, 13 and 14)
(See Steel Stringer Detail Sheet for Timber to Steel Connection Details)

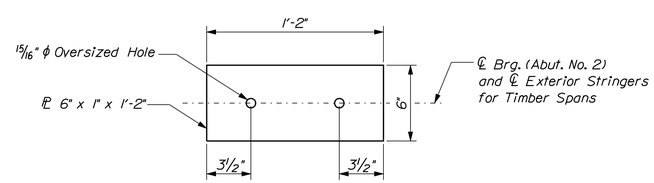

EXTERIOR STRINGER SHIM ℙ

(Pier Bents 1 Thru 10, 13 Abut. No. 1 and 2)

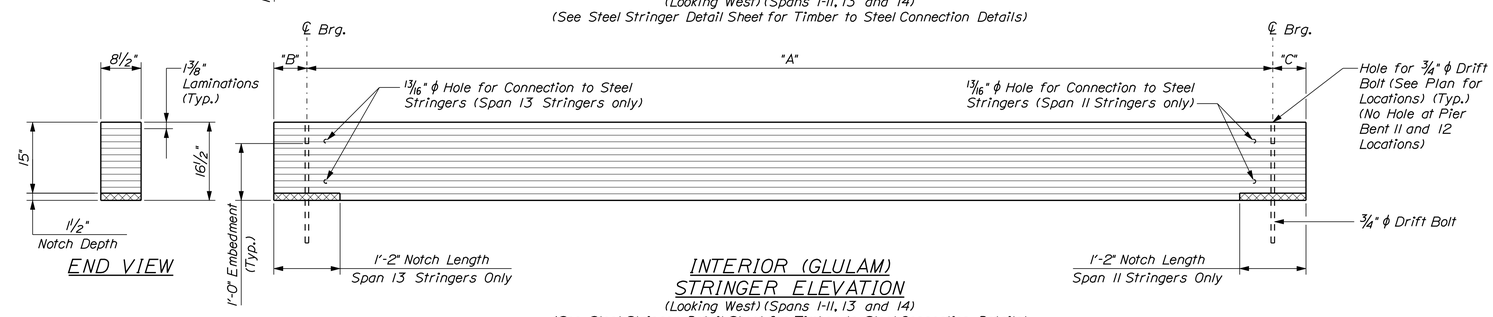

END VIEW

INTERIOR (GLULAM)
STRINGER ELEVATION

(Looking West) (Spans 1-11, 13 and 14)
(See Steel Stringer Detail Sheet for Timber to Steel Connection Details)

TIMBER STRINGER DIMENSION TABLE

Span No.	Stringer	"A"	"B"	"C"	Total Stringer Length
1	Exterior	17'-0"	5"	- 1/4"	17'-4 3/4"
	Interior	17'-0"	5"	7"	18'-0"
2 - 10	Exterior	17'-0"	- 1/4"	- 1/4"	16'-11 1/2"
	Interior	17'-0"	7"	7"	18'-2"
11	Exterior	17'-0"	- 1/4"	7"	17'-6 3/4"
	Interior	17'-0"	7"	7"	18'-2"
13	Exterior	17'-0"	7"	- 1/4"	17'-6 3/4"
	Interior	17'-0"	7"	7"	18'-2"
14	Exterior	Varies	- 1/4"	Varies	17'-8 1/2"
	Interior	Varies	7"	Varies	18'-3 3/4"

STATE OF MAINE
DEPARTMENT OF TRANSPORTATION

BR-1266(500)X

WIN 12665.00

BRIDGE NO. 3096

BRIDGE PLANS

STATE OF MAINE
Steven M. Hodgdon
11206
LICENSED
PROFESSIONAL ENGINEER

PROJ. MANAGER	N. BENOIT	BY	DATE
DESIGN-DETAILED	LSG	KDW	2\12
CHECKED-REVIEWED	SMH	LSG	2\12
DESIGN2-DETAILED2	---	---	---
DESIGN3-DETAILED3	---	---	---
REVISIONS 1	---	---	---
REVISIONS 2	---	---	---
REVISIONS 3	---	---	---
REVISIONS 4	---	---	---
FIELD CHANGES	---	---	---

P.E. NUMBER 11206
SIGNATURE
DATE 2/15/2012

SEWALL'S BRIDGE
YORK RIVER
YORK COUNTY
YORK

TIMBER STRINGER DETAILS

SHEET NUMBER
34
OF 50

Filename: ...\planset\034_Timber Details.dgn Division: Structures Username: kwentworth Date:2/15/2012

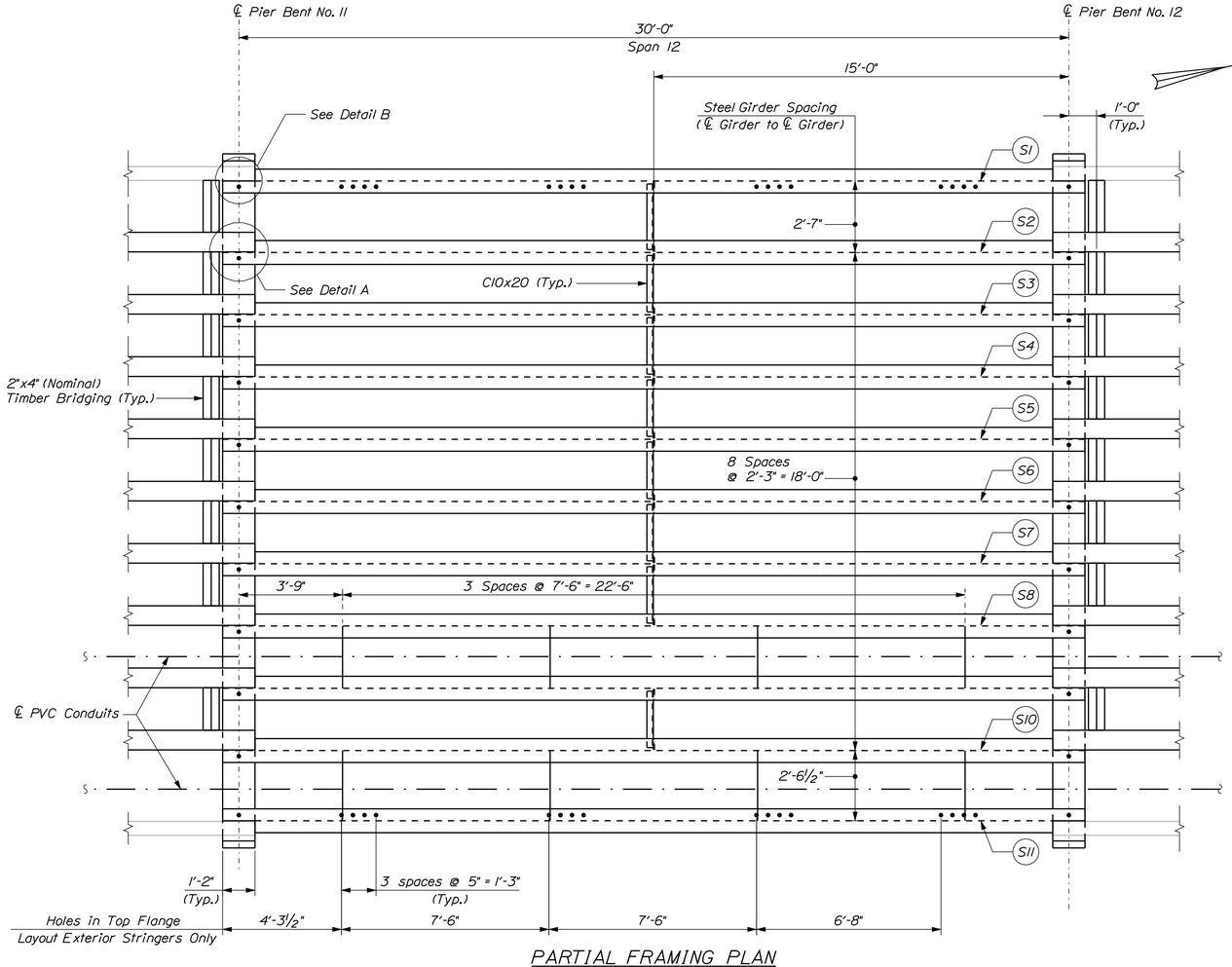

PARTIAL FRAMING PLAN

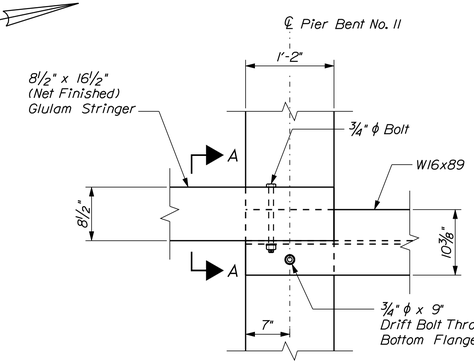

DETAIL A

(All Interior Stringers at Pier bent No. 11 and 12)
(Pier Bent 11 End Shown.
Pier Bent 12 End Opposite Hand)

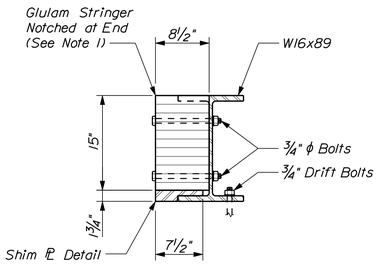

VIEW A-A

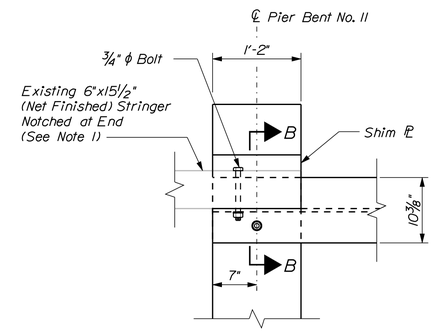

DETAIL B

(Steel Stringer 1 at Pier Bent 11 Shown.
Other 3 Exterior Stringer Bearing Locations Similar)

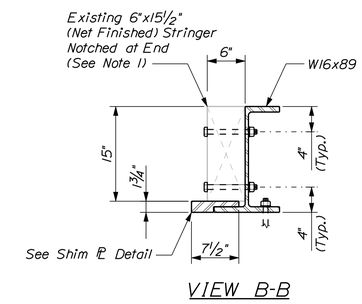

VIEW B-B

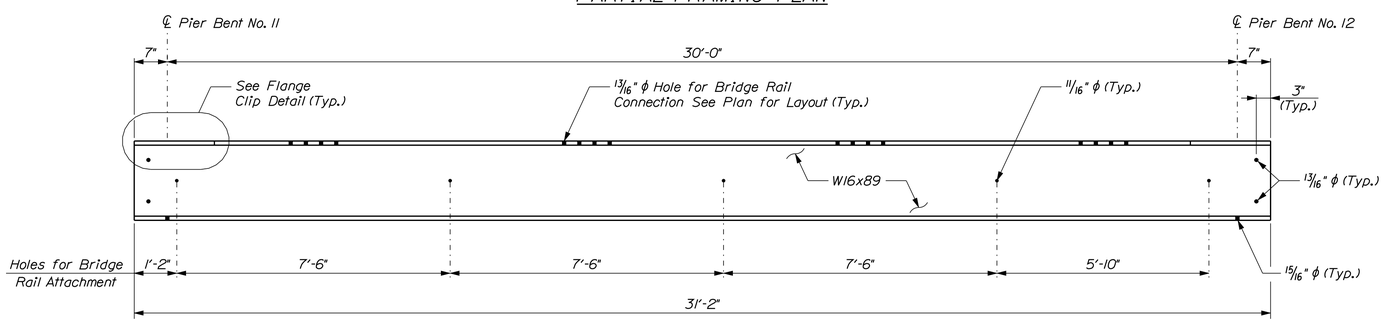

EXTERIOR STEEL STRINGER ELEVATION

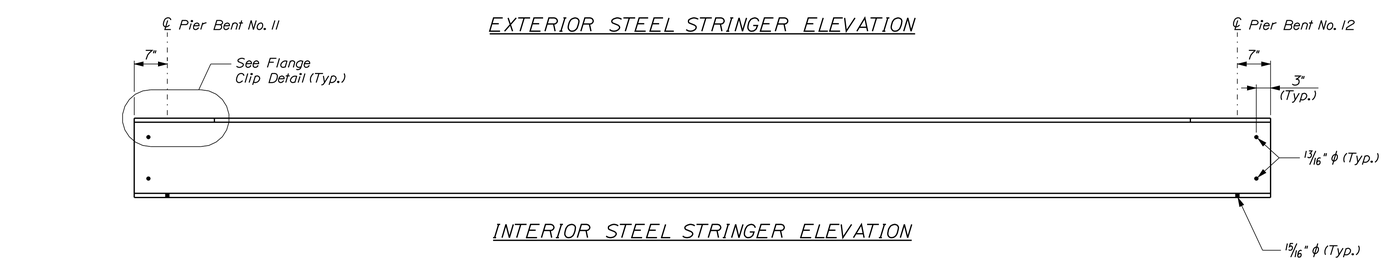

INTERIOR STEEL STRINGER ELEVATION

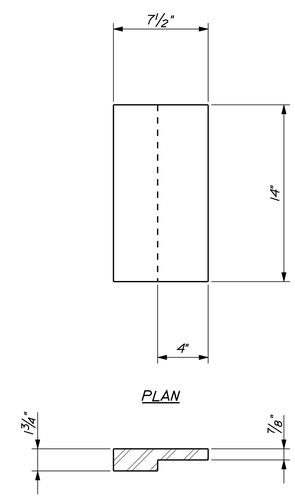

SHIM ℄ DETAIL

(All Timber Stringers at Pier Bents 11 and 12)

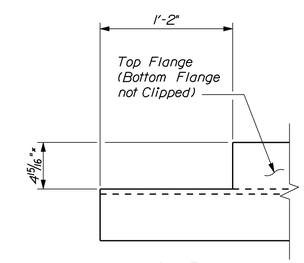

FLANGE CLIP DETAIL

(Stringer 1 at Pier Bent No. 11 Shown.
Other Stringers Similar)
(See Framing Plan for Orientation)

NOTE

1. See Stringer Elevation on Bridge Sheet 34 for Notching Details.

STATE OF MAINE
DEPARTMENT OF TRANSPORTATION

BR-1266(500)X

WIN 12665.00

BRIDGE PLANS

BRIDGE NO. 3096

STATE OF MAINE — Steven M. Hodgdon — 11206 — LICENSED PROFESSIONAL ENGINEER

		BY	DATE
PROJ. MANAGER	N. BENOIT		
DESIGN-DETAILED	LSG	KDW	2\12
CHECKED-REVIEWED	SMH	LSG	2\12
DESIGN2-DETAILED2	---	---	---
DESIGN3-DETAILED3	---	---	---
REVISIONS 1	---	---	---
REVISIONS 2	---	---	---
REVISIONS 3	---	---	---
REVISIONS 4	---	---	---
FIELD CHANGES	---	---	---

Steven M. Hodgdon
SIGNATURE
11206
P.E. NUMBER
2/15/2012
DATE

SEWALL'S BRIDGE
YORK RIVER
YORK COUNTY
YORK

STEEL STRINGER DETAILS
(1 OF 2)

SHEET NUMBER
35
OF 50

Filename: ...\035_Steel Details_01.dgn Division: Structures Username: kwentworth Date:2/15/2012

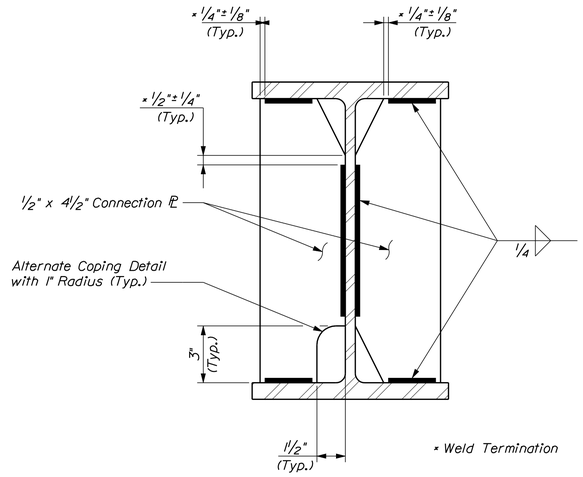

CONNECTION ℙ
(Holes not Shown)

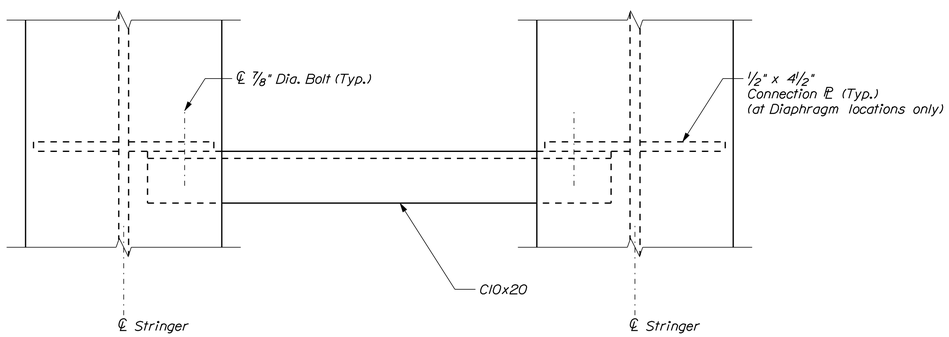

PLAN

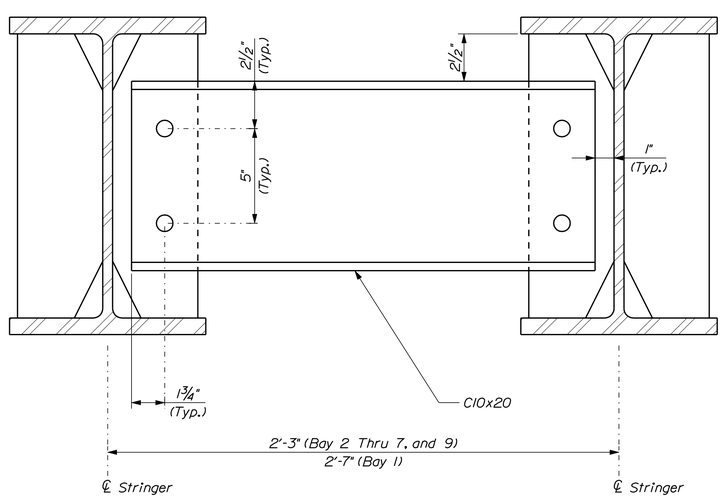

ELEVATION

DIAPHRAGMS
(Looking Upstation)
(Bay 2 Shown, Others Similar)

STRUCTURAL STEEL NOTES

1. Diaphragm connection plates may be either plumb or normal to the top flange.

2. Place stringers with any natural mill camber in the upward direction.

3. Steel stringers, connection plates, and diaphragms shall be galvanized and coated in accordance with Special Provision Section 506. The topcoat color shall be brown, Federal Standard 595B color no. 20059.

STATE OF MAINE
DEPARTMENT OF TRANSPORTATION

BR-1266(500)X

WIN 12665.00

BRIDGE NO. 3096

BRIDGE PLANS

STATE OF MAINE Steven M. Hodgdon 11206 LICENSED PROFESSIONAL ENGINEER

Steven M. Hodgdon

SIGNATURE			
11206			
P.E. NUMBER			
2/15/2012			
DATE			

PROJ. MANAGER	N. BENOIT	BY	DATE
DESIGN-DETAILED	LSG	KDW	2\12
CHECKED-REVIEWED	SMH	LSG	2\12
DESIGN2-DETAILED2	---	---	---
DESIGN3-DETAILED3	---	---	---
REVISIONS 1	---	---	---
REVISIONS 2	---	---	---
REVISIONS 3	---	---	---
REVISIONS 4	---	---	---
FIELD CHANGES	---	---	---

SEWALL'S BRIDGE
YORK RIVER
YORK COUNTY
YORK

STEEL STRINGER DETAILS
(2 OF 2)

SHEET NUMBER
36
OF 50

Filename: ...\036_SteelDetails_02.dgn Division: Structures Username: kwentworth Date:2/15/2012

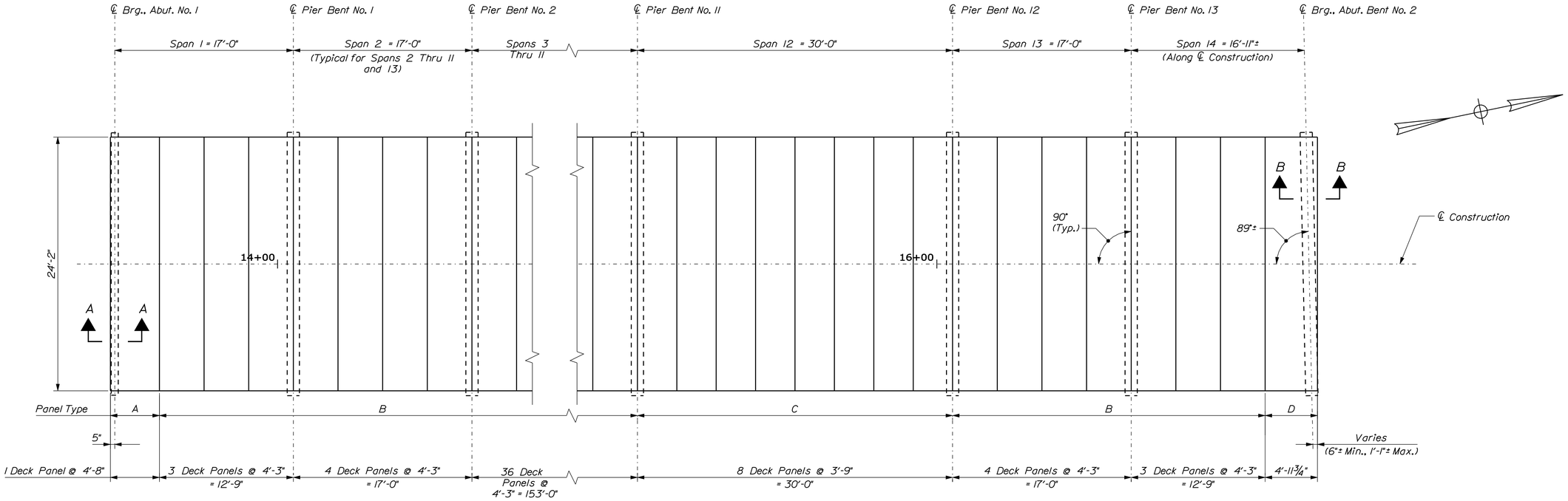

DECK PANEL PLAN

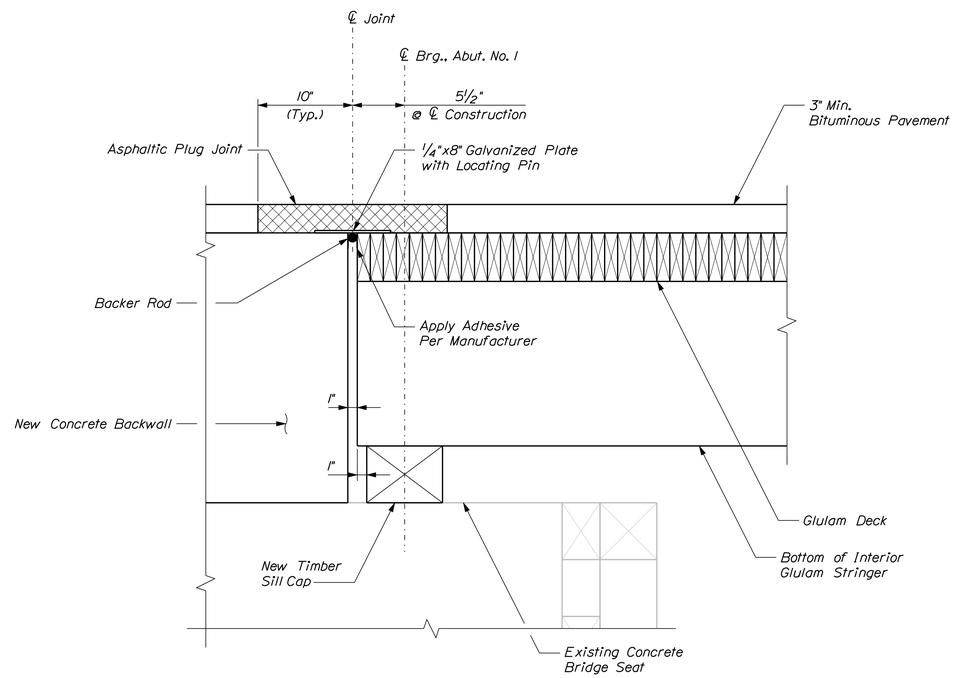

VIEW A-A

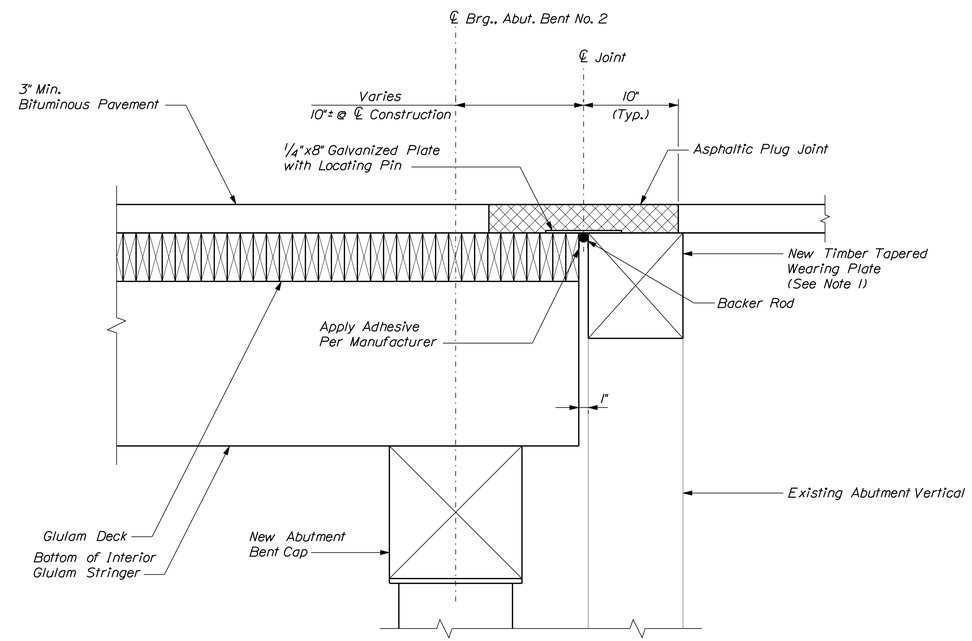

VIEW B-B

NOTES

1. See Bridge Sheet 26 for New Timber Tapered Wearing Plate Layout and Dimensions.

STATE OF MAINE
DEPARTMENT OF TRANSPORTATION

BR-1266(500)X

WIN 12665.00

BRIDGE NO. 3996

BRIDGE PLANS

STATE OF MAINE — Steven M. Hodgdon — LICENSED PROFESSIONAL ENGINEER — 11206

PROJ. MANAGER	N. BENOIT	BY	DATE
DESIGN-DETAILED	LSG	KDW	2\12
CHECKED-REVIEWED	SMH	LSG	2\12
DESIGN2-DETAILED2	---	---	---
DESIGN3-DETAILED3	---	---	---
REVISIONS 1	---	---	---
REVISIONS 2	---	---	---
REVISIONS 3	---	---	---
REVISIONS 4	---	---	---
FIELD CHANGES	---	---	---

11206
P.E. NUMBER
SIGNATURE

2/15/2012
DATE

SEWALL'S BRIDGE
YORK RIVER
YORK COUNTY
YORK

DECK DETAILS (1 OF 2)

SHEET NUMBER
37
OF 50

Filename: ...\st\planset\037_joint_01.dgn Division: Structures Username: kwentworth Date:2/15/2012

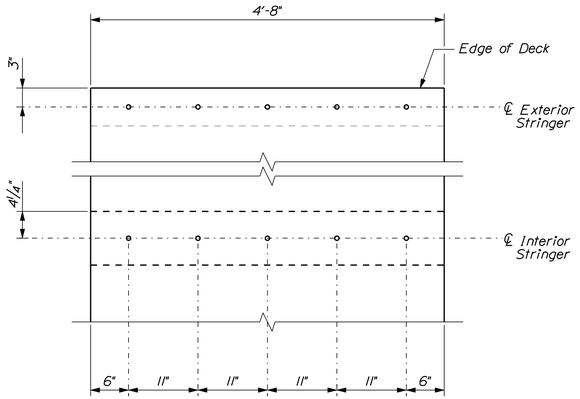

DECK PANEL "A"

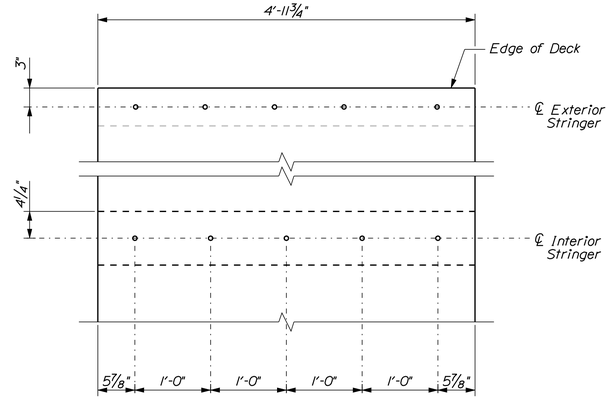

DECK PANEL "D"

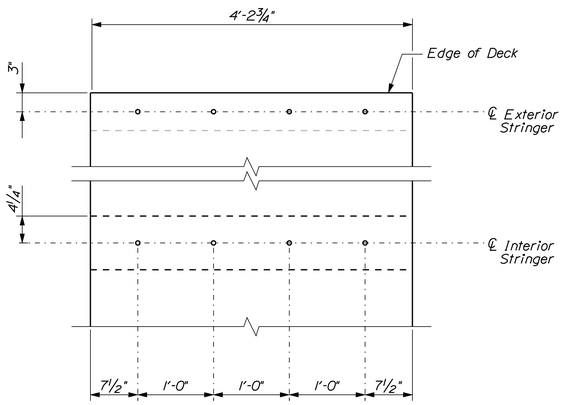

DECK PANEL "B"

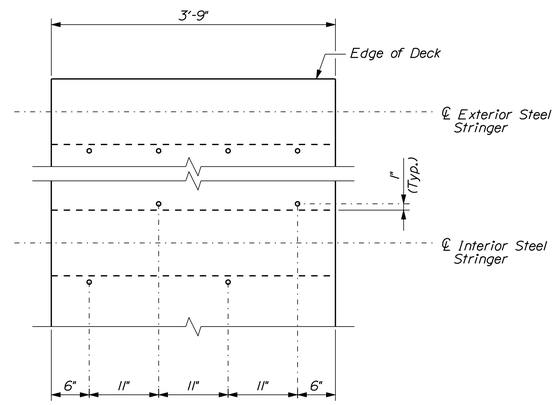

DECK PANEL "C"

GLULAM DECK FASTENER SPACING
(Plan View)

GLULAM TIMBER DECK NOTES

1. The glulam timber deck panels shall vary between 3'-9" and 4'-11¾" wide and be 5⅛" thick.

2. Joints between glulam panels shall be filled with an approved sealant.

3. The glulam timber deck panels shall be preservative treated in accordance to AASHTO M133. Post treatment cleaning of the deck panels to minimize the amount of free preservative at the deck panel surfaces is required.

4. Prior to paving the deck, blotter material shall be applied to absorb any excess preservative from the deck surface. The blotter shall be a mixture of dust and 10 to 20% crushed material passing the no. 8 sieve spread at a rate of 1.5 lb/sf. Immediately after spreading the blotter shall be rolled with a rubber-tire roller. After a minimum of five days the blotter shall be removed with brooms and properly disposed of. If excess preservative is still visible on the deck surface, the Resident shall direct the Contractor to repeat the blotter application. The deck shall be thoroughly cleaned prior to application of the pavement.

5. All costs for the glulam deck panels, including connection hardware, joint sealant, and cleanings shall be included in Item 528.9105.

6. Documentation shall be provided by the supplier to verify retention levels of treatment, stress ratings of wood, and steam cleaning.

7. The supplier of the deck panels shall have a representative on site during installation to provide consultation as required by the Resident to properly install the deck.

8. The deck panels shall be carefully handled throughout the construction process. If stockpiling the panels is necessary, care shall be taken not to damage the panels. The use of rope slings is recommended. Hooks shall not be used. Any damaged panels deemed unacceptable by the Resident Engineer will be replaced at the contractor's expense.

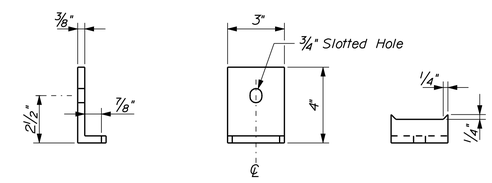

SIDE VIEW PLAN END VIEW

STEEL SPAN - STEEL ANGLE BRACKET

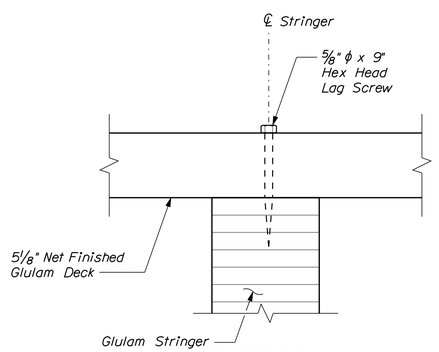

TIMBER SPAN
(Interior Glulam Stringer)

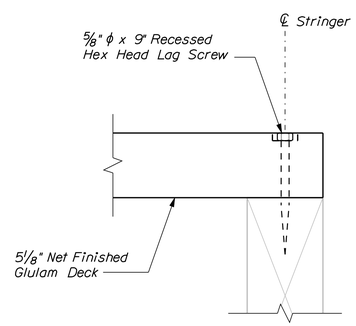

TIMBER SPAN
(Exterior Solid Sawn Stringer)

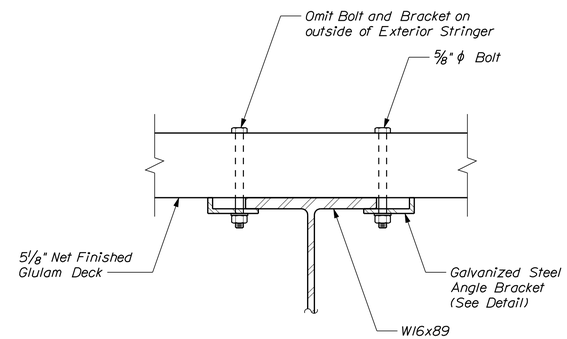

STEEL SPAN

GLULAM DECK FASTENER DETAIL

STATE OF MAINE
DEPARTMENT OF TRANSPORTATION

BR-1266(500)X

WIN 12665.00

BRIDGE NO. 3096

BRIDGE PLANS

STATE OF MAINE
Steven M. Hodgdon
No. 11206
LICENSED
PROFESSIONAL ENGINEER

		BY	DATE
PROJ. MANAGER	N. BENOIT		
DESIGN-DETAILED	LSG	KDW	2\12
CHECKED-REVIEWED	SMH	LSG	2\12
DESIGN2-DETAILED2	---	---	---
DESIGN3-DETAILED3	---	---	---
REVISIONS 1	---	---	---
REVISIONS 2	---	---	---
REVISIONS 3	---	---	---
REVISIONS 4	---	---	---
FIELD CHANGES	---	---	---

Steven M. Hodgdon
SIGNATURE
11206
P.E. NUMBER
2/15/2012
DATE

SEWALL'S BRIDGE
YORK RIVER
YORK COUNTY
YORK

DECK DETAILS (2 OF 2)

SHEET NUMBER
38
OF 50

Filename: ...\st\planset\038_joint_02.dgn Division: Structures Username: kwentworth Date:2/15/2012

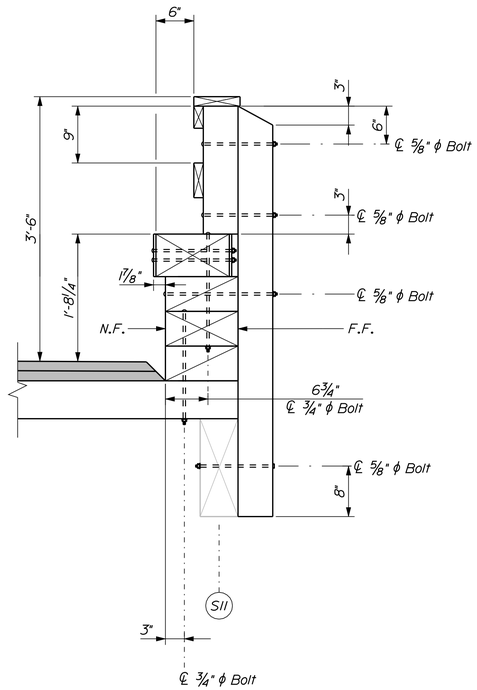

TIMBER SPAN SECTION

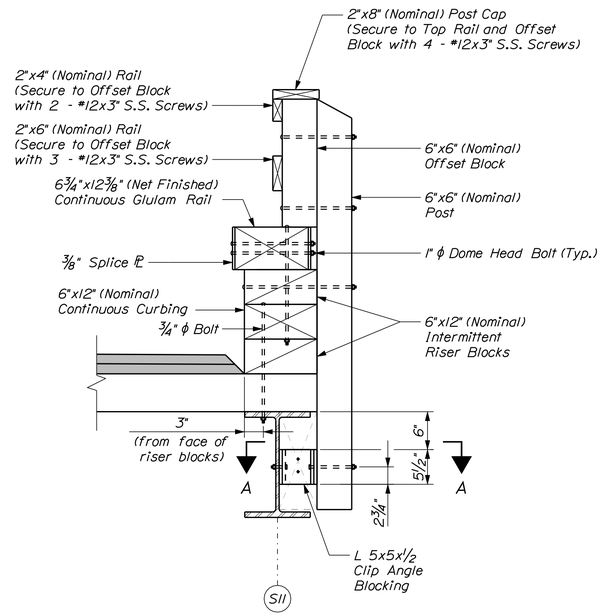

STEEL SPAN SECTION

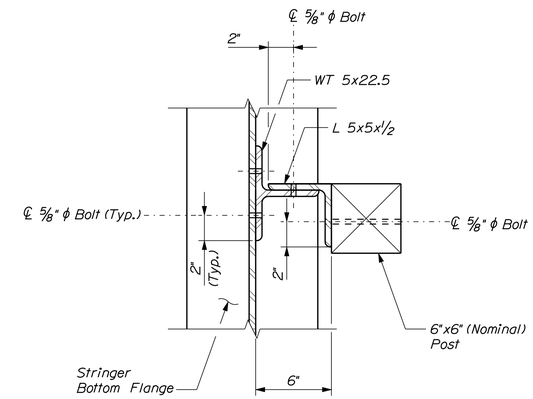

VIEW A-A

BRIDGE RAIL ASSEMBLY

(Railing assembly above the deck is the same for all spans.)

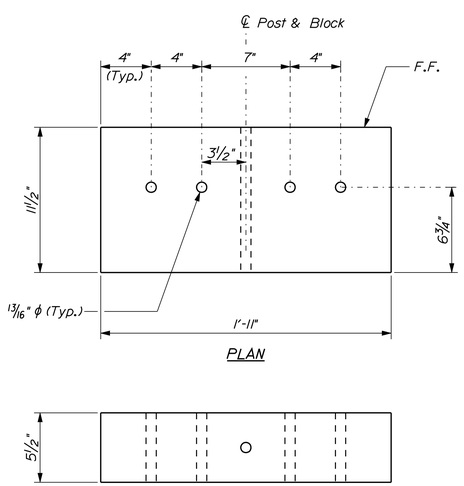

PLAN

ELEVATION

TOP TIMBER RISER BLOCK DETAILS

(See Partial Elevation - Pier Bent II
for Top Riser Block Details over Pier Bent II)

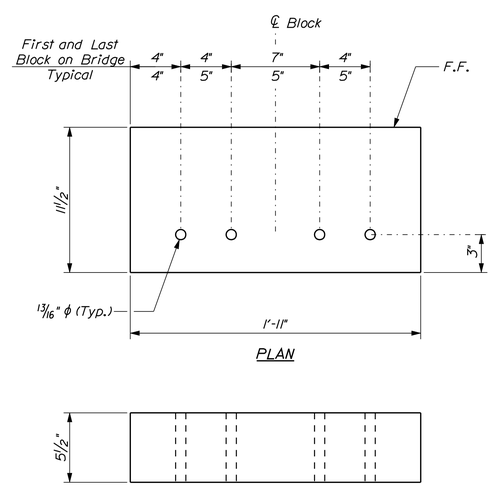

PLAN

ELEVATION

BOTTOM TIMBER RISER BLOCK DETAILS

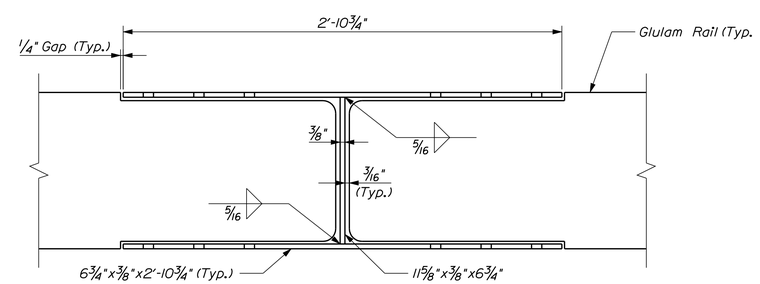

PLAN

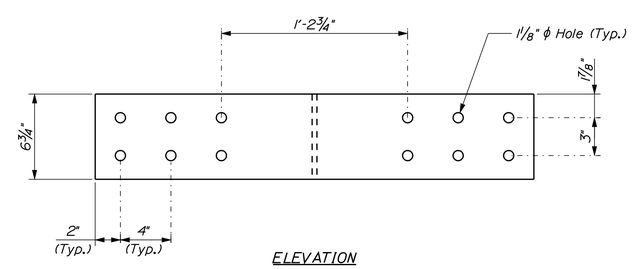

ELEVATION

STEEL SPLICE DETAILS - GLULAM RAIL

KEY

N.F. = Near Face

F.F. = Far Face

STATE OF MAINE
DEPARTMENT OF TRANSPORTATION

BR-1266(500)X

WIN 12665.00

BRIDGE NO. 3096

BRIDGE PLANS

STATE OF MAINE
Steven M. Hodgdon
11206
LICENSED
PROFESSIONAL ENGINEER

Steven M. Hodgdon

SIGNATURE		
11206	P.E. NUMBER	
2/15/2012	DATE	

PROJ. MANAGER	N. BENOIT	BY	DATE
DESIGN-DETAILED	LSG	KDW	2\12
CHECKED-REVIEWED	SMH	LSG	2\12
DESIGN2-DETAILED2	---	---	---
DESIGN3-DETAILED3	---	---	---
REVISIONS 1	---	---	---
REVISIONS 2	---	---	---
REVISIONS 3	---	---	---
REVISIONS 4	---	---	---
FIELD CHANGES	---	---	---

SEWALL'S BRIDGE
YORK RIVER
YORK COUNTY
YORK

BRIDGE RAIL DETAILS
(1 OF 2)

SHEET NUMBER
39
OF 50

Filename: ...\cad\st\planset\039_Rail_01.dgn Division: Structures Username: kwentworth Date:2/15/2012

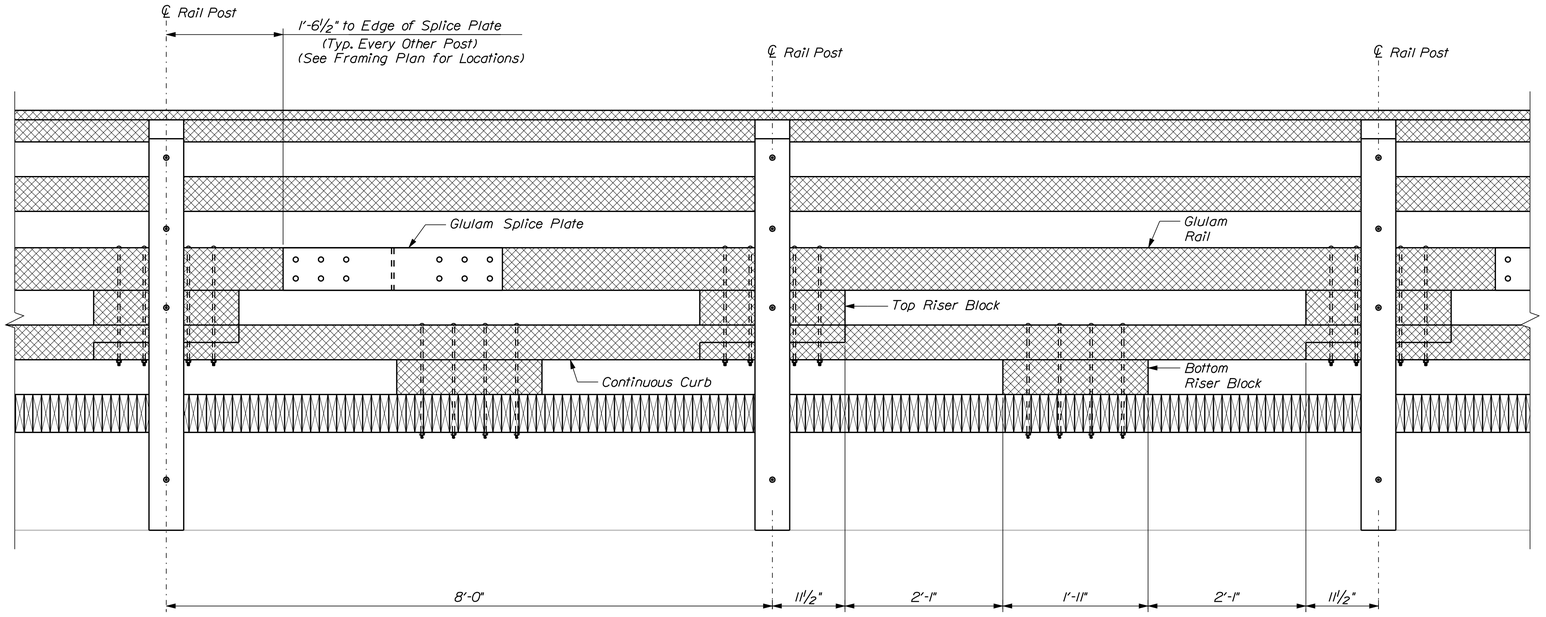

PARTIAL ELEVATION
(8'-0" spacing shown,
See Bridge Sheet 31 and 32 for Rail Layout)

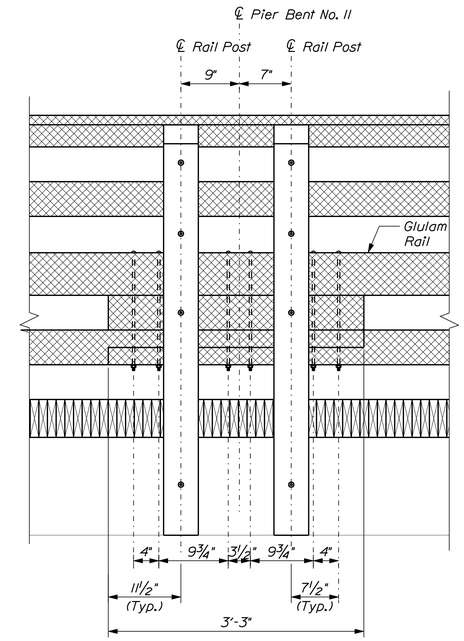

PARTIAL ELEVATION - PIER BENT NO. 11

GLULAM RAIL DIMENSIONS			
Rail Type	"A"	"B"	"C"
1	2'-11"	6'-9"	15'-11¼"
2	1'-11"	6'-3"	15'-9¼"
3	2'-5"	6'-9"	15'-5¼"
4	2'-5"	6'-3"	14'-11¼"
5	0'-9"	6'-9"	13'-9¼"
6	2'-5"	2'-1"	8'-9¼"
7	2'-3¾"	N/A	7'-4"

CONTINUOUS TIMBER CURB DIMENSIONS				
Rail Type	Post Spacing	"D"	"E"	"F"
A	8'-0"	6'-1"	2'-5"	9'-11"
B	7'-6"	5'-7"	2'-2"	9'-5"
* C	7'-0"	5'-1"	1'-11"	10'-3"
D	5'-10"	3'-11"	1'-4"	7'-9"
E	3'-5"	1'-6"	N/A	5'-4"
F	3'-3"	1'-4"	N/A	5'-3"

* See Partial Elevation - Pier Bent No. 11 for Glulam Rail Details over Pier Bent No. 11

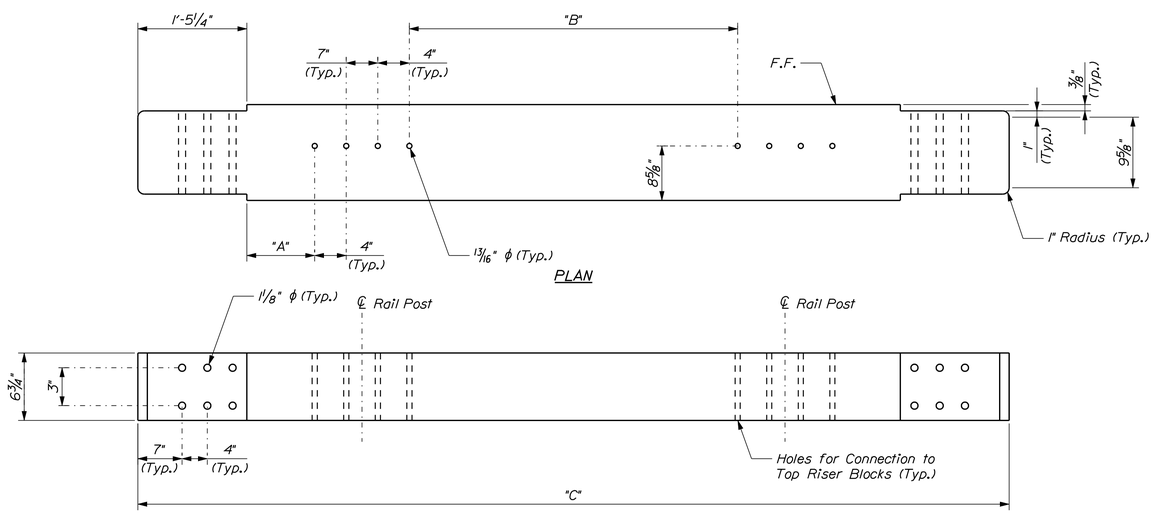

ELEVATION

GLULAM RAIL DETAILS
(See Partial Elevation - Pier Bent No. 11 for Glulam Rail Details over Pier Bent No. 11)

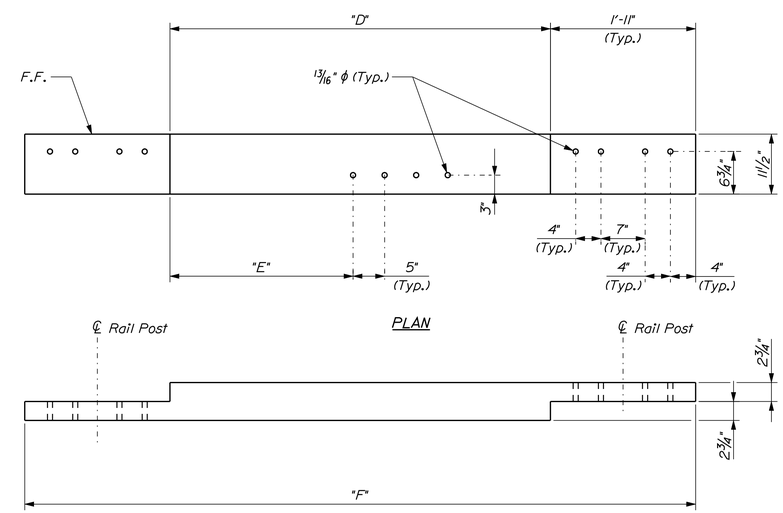

ELEVATION

CONTINUOUS TIMBER CURB DETAILS
(See Partial Elevation - Pier Bent No. 11 for Glulam Rail Details over Pier Bent No. 11)

KEY

N.F. = Near Face

F.F. = Far Face

STATE OF MAINE
DEPARTMENT OF TRANSPORTATION

BR-1266(500)X

WIN 12665.00

BRIDGE NO. 3096

BRIDGE PLANS

STATE OF MAINE
Steven M. Hodgdon
No. 11206
LICENSED
PROFESSIONAL ENGINEER

Steven M. Hodgdon
SIGNATURE

11206
P.E. NUMBER

2/15/2012
DATE

PROJ. MANAGER	N. BENOIT	BY	DATE
DESIGN-DETAILED	LSG	KDW	2\12
CHECKED-REVIEWED	SMH	LSG	2\12
DESIGN2-DETAILED2	---	---	---
DESIGN3-DETAILED3	---	---	---
REVISIONS 1	---	---	---
REVISIONS 2	---	---	---
REVISIONS 3	---	---	---
REVISIONS 4	---	---	---
FIELD CHANGES	---	---	---

SEWALL'S BRIDGE
YORK RIVER
YORK COUNTY
YORK

BRIDGE RAIL DETAILS
(2 OF 2)

SHEET NUMBER
40
OF 50

Filename: ...\cad\st\planset\040_Rail_02.dgn Division: Structures Username: kwentworth Date:2/15/2012

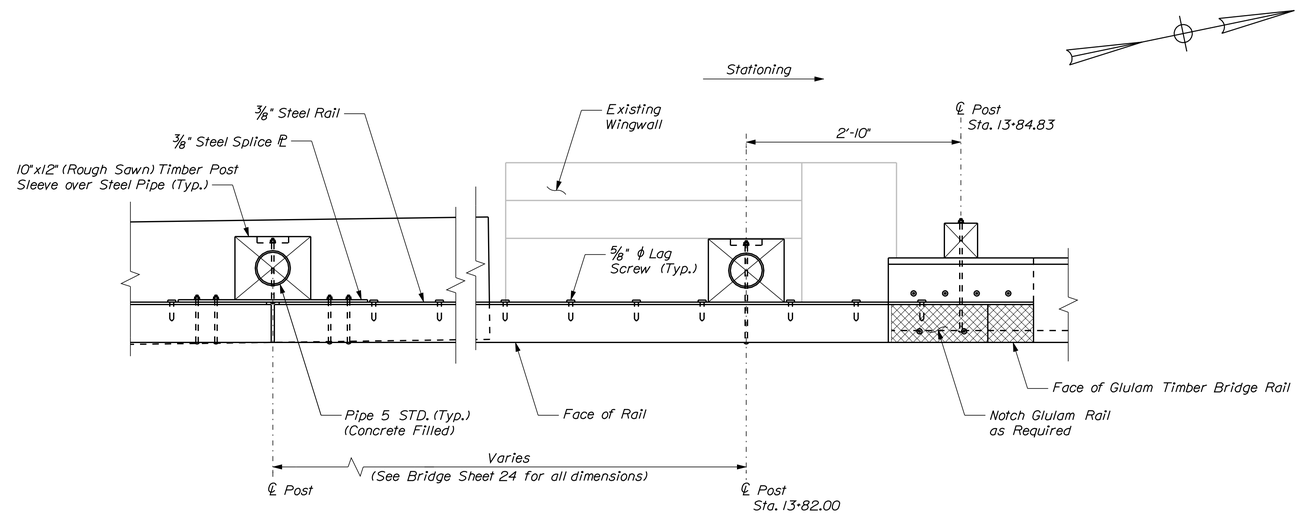

PLAN
(Top Rails not Shown for Clarity)

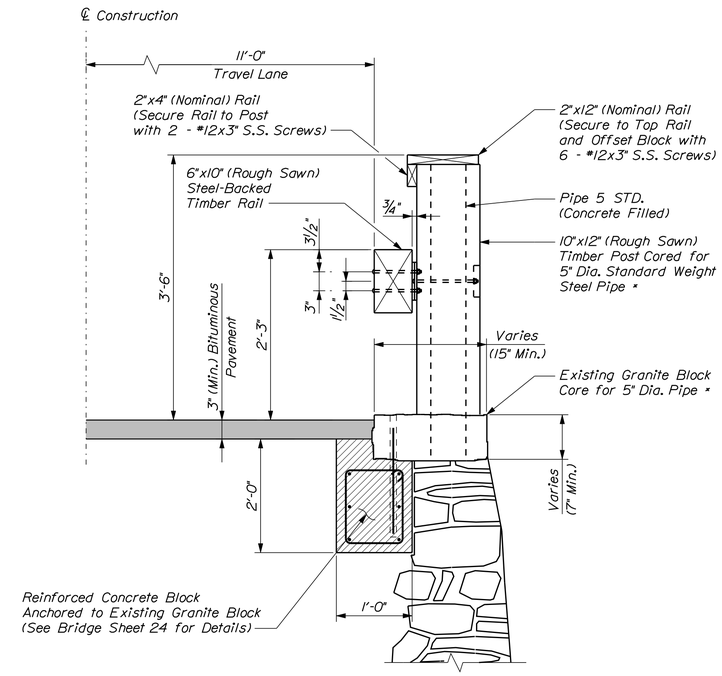

SECTION A-A
* Fill with approved product for tight fit

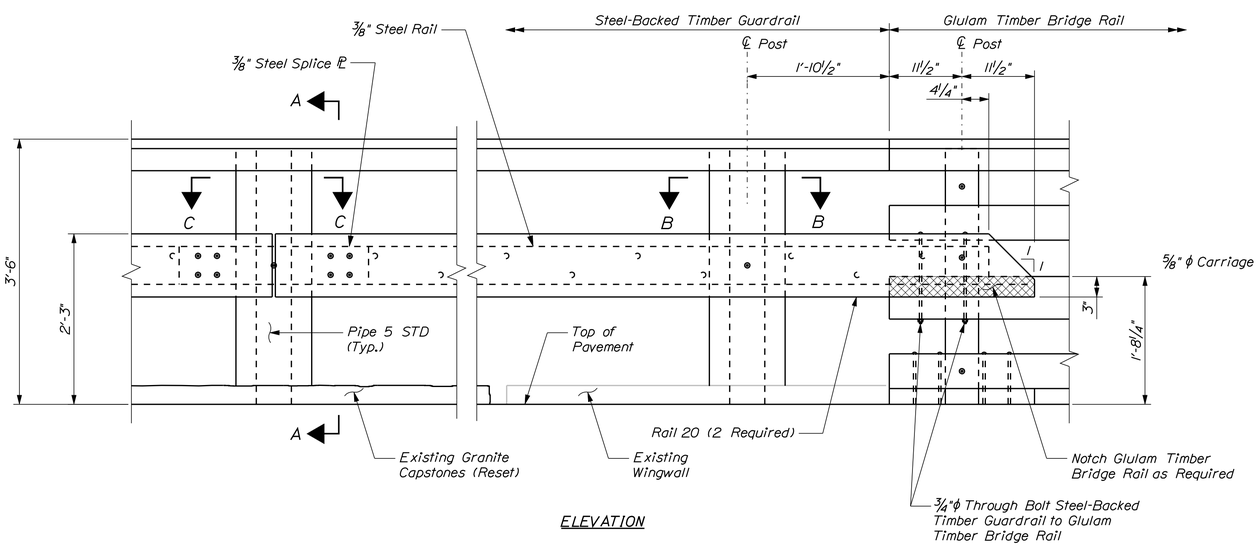

ELEVATION

SOUTH APPROACH RAIL
(West Rail Shown, East Rail Similar)

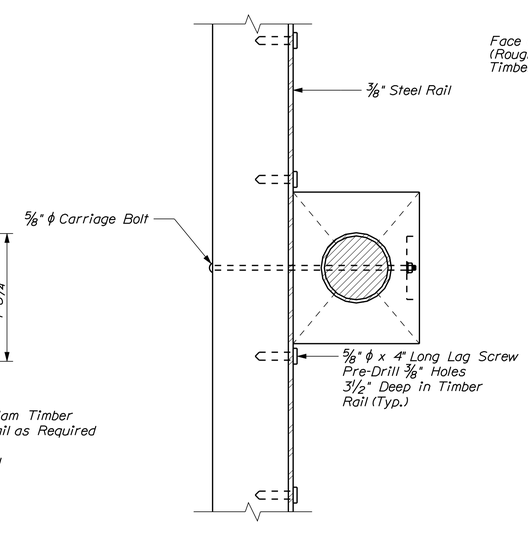

SECTION B-B

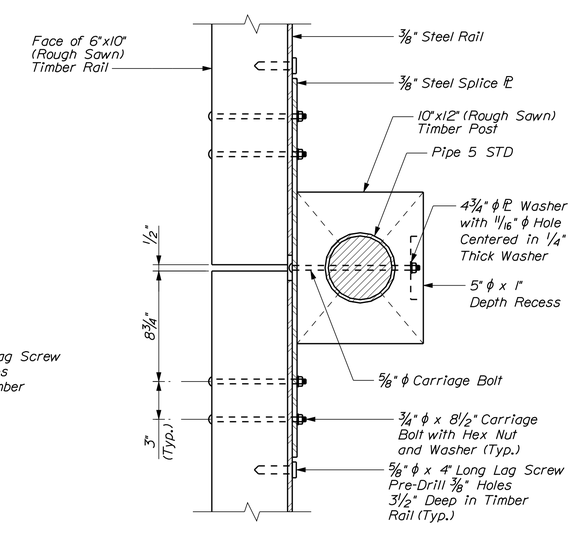

SECTION C-C

STATE OF MAINE
DEPARTMENT OF TRANSPORTATION

BR-1266(500)X

WIN 12665.00

BRIDGE NO. 3096

BRIDGE PLANS

STATE OF MAINE — Steven M. Hodgdon — LICENSED PROFESSIONAL ENGINEER

Steven M. Hodgdon
SIGNATURE

11206
P.E. NUMBER

2/15/2012
DATE

PROJ. MANAGER	N. BENOIT	BY	DATE
DESIGN-DETAILED	LSG	KDW	2\12
CHECKED-REVIEWED	SMH	LSG	2\12
DESIGN2-DETAILED2	---	---	---
DESIGN3-DETAILED3	---	---	---
REVISIONS 1	---	---	---
REVISIONS 2	---	---	---
REVISIONS 3	---	---	---
REVISIONS 4	---	---	---
FIELD CHANGES	---	---	---

SEWALL'S BRIDGE
YORK RIVER
YORK COUNTY
YORK

SOUTH APPROACH RAIL

SHEET NUMBER
41
OF 50

Filename: ...\cad\st\planset\041_Rail_03.dgn Division: Structures Username: kwentworth Date:2/15/2012

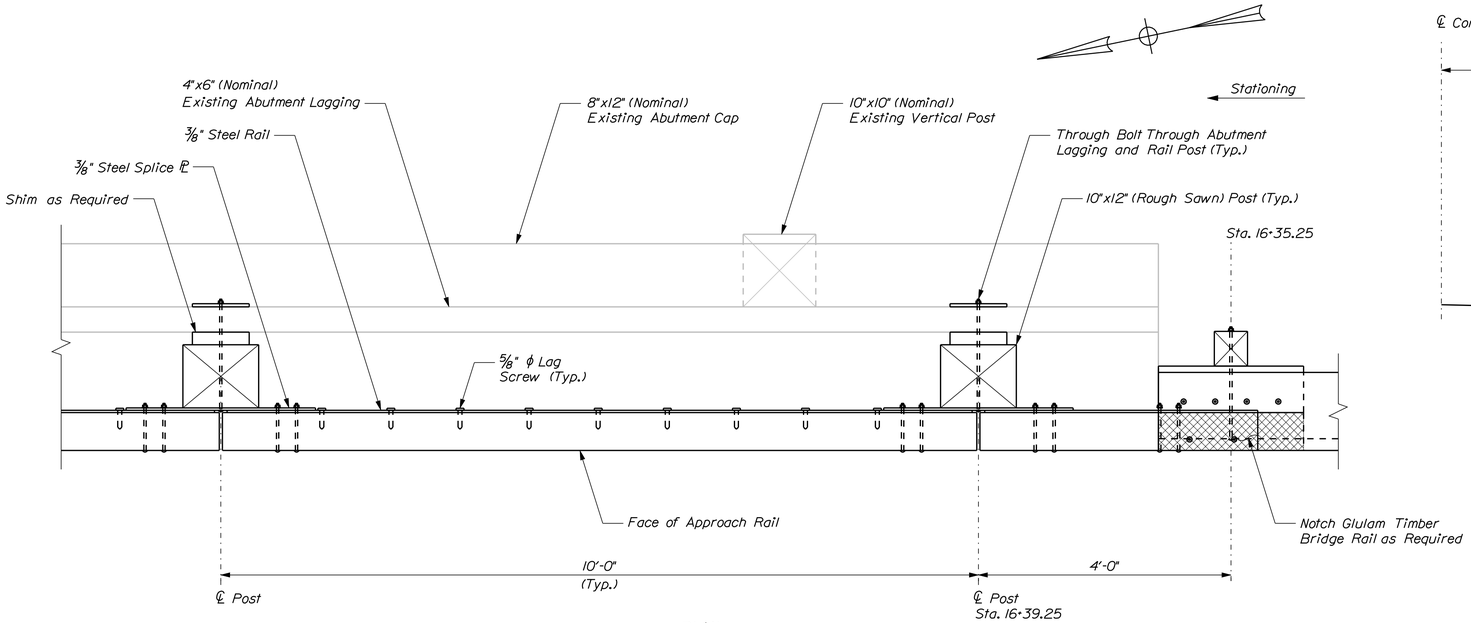

PLAN

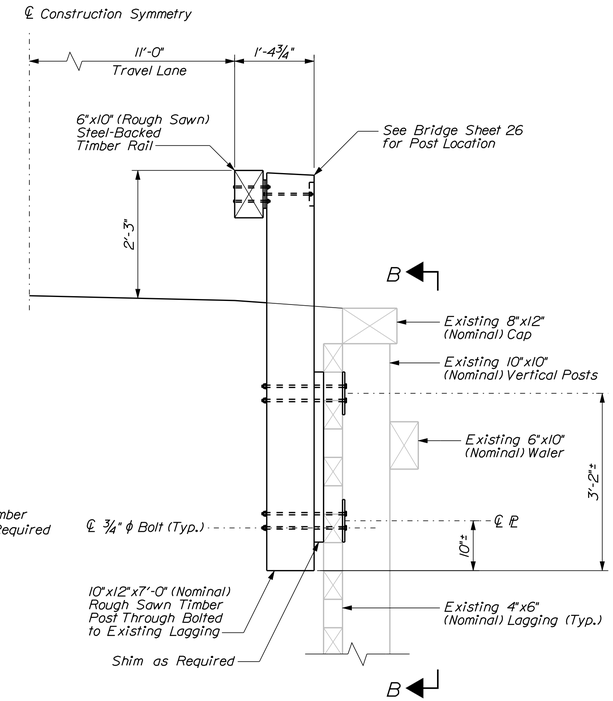

SECTION A-A
(Looking North)

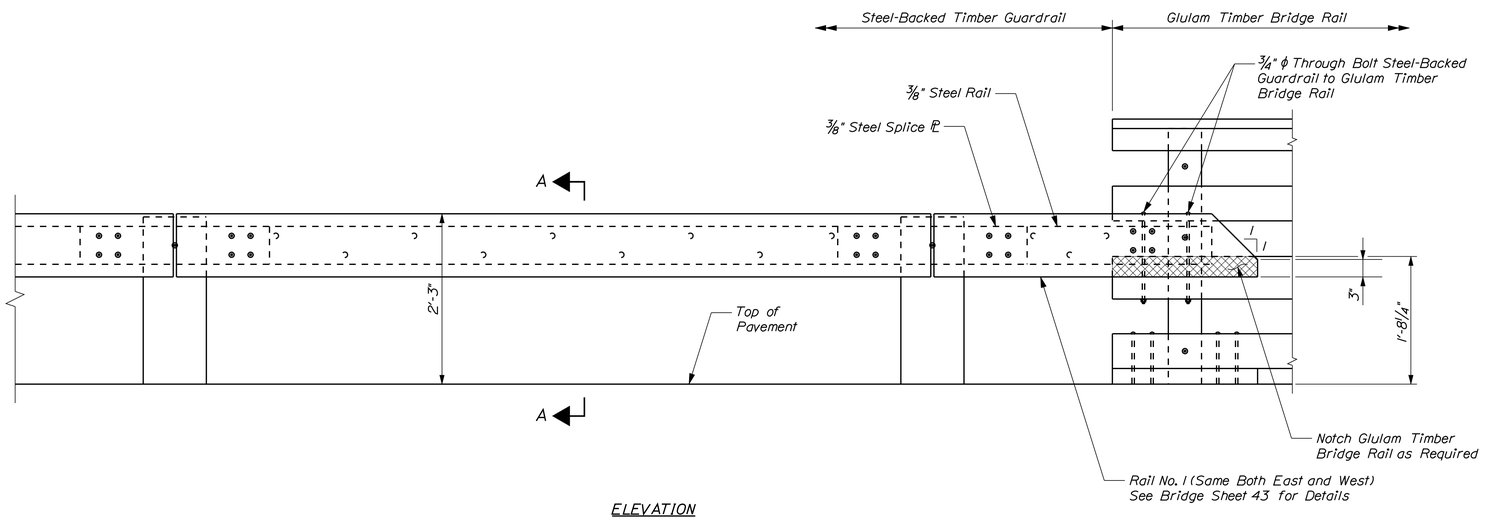

ELEVATION

NORTH APPROACH RAIL
(East Rail Shown, West Rail Similar)

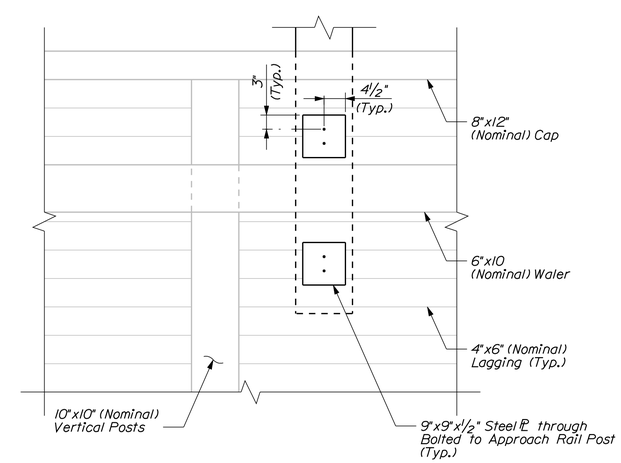

VIEW B-B

STATE OF MAINE
DEPARTMENT OF TRANSPORTATION

BR-1266(500)X

WIN 12665.00

BRIDGE NO. 3096

BRIDGE PLANS

STATE OF MAINE — Steven M. Hodgdon — No. 11206 — LICENSED PROFESSIONAL ENGINEER

PROJ. MANAGER	N. BENOIT	BY	DATE
DESIGN-DETAILED	LSG	KDW	2\12
CHECKED-REVIEWED	SMH	LSG	2\12
DESIGN2-DETAILED2	---	---	---
DESIGN3-DETAILED3	---	---	---
REVISIONS 1	---	---	---
REVISIONS 2	---	---	---
REVISIONS 3	---	---	---
REVISIONS 4	---	---	---
FIELD CHANGES	---	---	---

P.E. NUMBER 11206
SIGNATURE
DATE 2/15/2012

SEWALL'S BRIDGE
YORK RIVER
YORK COUNTY
YORK

NORTH APPROACH RAIL

SHEET NUMBER
42
OF 50

Filename: ...\cad\st\planset\042_Rail_04.dgn Division: Structures Username: kwentworth Date:2/15/2012

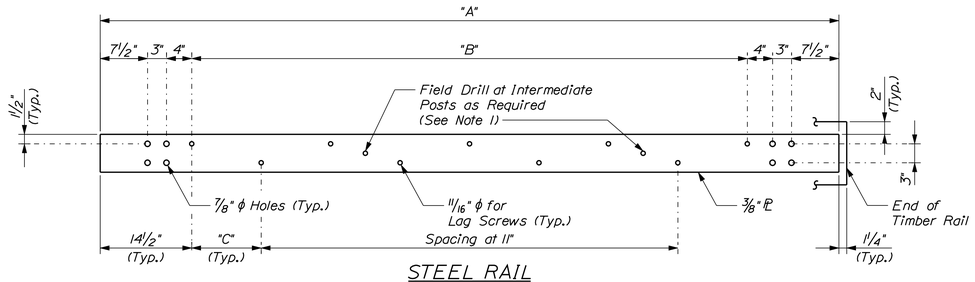

STEEL RAIL

(See Rail Dimensions Table)

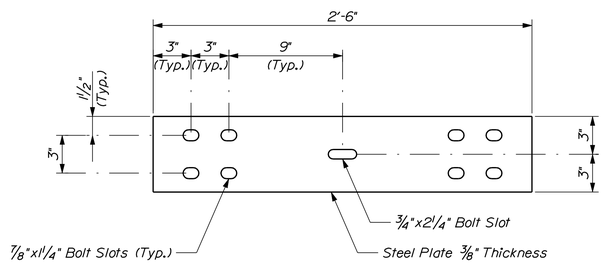

STEEL SPLICE PLATE

RAIL DIMENSION TABLE				
SOUTH APPROACH RAIL				
Rail No.	Timber Rail Length	A	B	C
1	13'-0¾"	12'-10¼"	10'-5¼"	7⅝"
2	20'-3½"	20'-1"	17'-8"	7"
3	18'-5½"	18'-3"	15'-10"	7"
4	19'-1¼"	18'-4¾"	15'-11¾"	7⅞"
5	15'-10½"	15'-8"	13'-3"	8"
6	15'-9½"	15'-7"	13'-2"	7½"
7	18'-4¼"	17'-7¾"	15'-2¾"	8⅞"
NORTH APPROACH RAIL				
Rail No.	Timber Rail Length	A	B	C
1	4'-11¼"	4'-2¾"	1'-9¾"	0'-10⅞"

See Bridge Sheets 24 and 41 for Rail No. Location

NOTE

1. Touch up damaged galvanized surfaces and drill holes with zinc-rich primer as approved by the Resident.

STATE OF MAINE
DEPARTMENT OF TRANSPORTATION

BR-1266(500)X

WIN 12665.00

BRIDGE NO. 3096

BRIDGE PLANS

STATE OF MAINE Steven M. Hodgdon 11206 LICENSED PROFESSIONAL ENGINEER

Steven M. Hodgdon
SIGNATURE

11206
P.E. NUMBER

2/15/2012
DATE

PROJ. MANAGER	N. BENOIT	BY	DATE
DESIGN-DETAILED	LSG	KDW	2\12
CHECKED-REVIEWED	SMH	LSG	2\12
DESIGN2-DETAILED2	---	---	---
DESIGN3-DETAILED3	---	---	---
REVISIONS 1	---	---	---
REVISIONS 2	---	---	---
REVISIONS 3	---	---	---
REVISIONS 4	---	---	---
FIELD CHANGES	---	---	---

SEWALL'S BRIDGE
YORK RIVER
YORK COUNTY
YORK

APPROACH RAIL DETAILS

SHEET NUMBER

43

OF 50

Filename: ...\cad\st\planset\043_Rail_05.dgn Division: Structures Username: kwentworth Date:2/15/2012

STATE	PROJECT	SHEET NUMBER

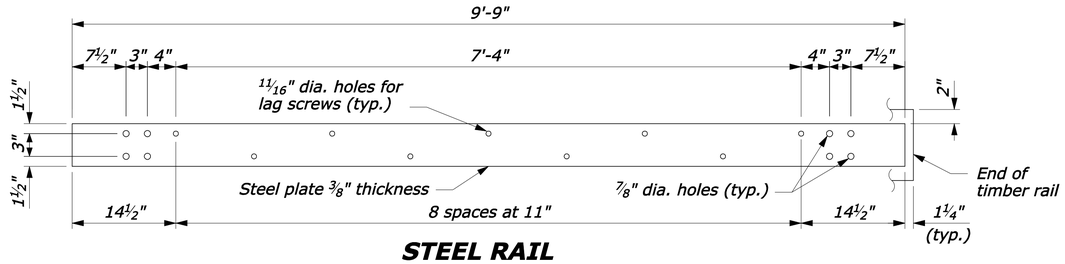

STEEL RAIL

PLATE WASHER

NOTE:

1. Use the Type A, blocked-out, system or the Type B, non-blocked-out, system as specified in the plans.
2. ~~Use weathering steel for all structural steel and fastener hardware as specified.~~
3. Place a terminal section (See Standards 617-61 ~~and 617-62)~~ on both approach and trailing ends of barrier installations.

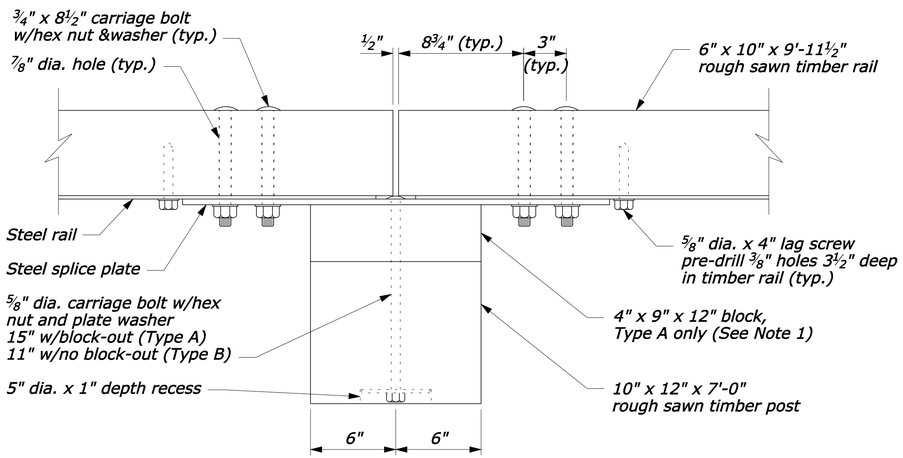

PLAN

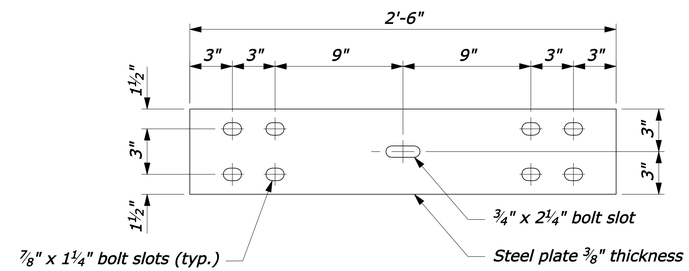

STEEL SPLICE PLATE

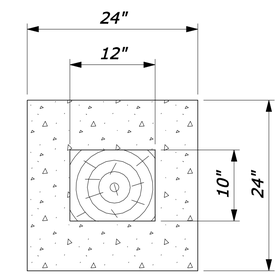

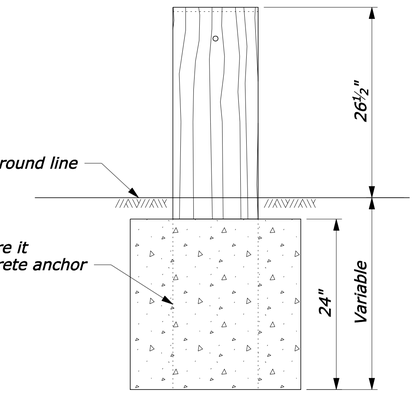

24" dia. round anchor is an acceptable alternative.
Reduced size acceptable in solid rock.

CONCRETE ANCHOR FOR SHORT GUARDRAIL POST

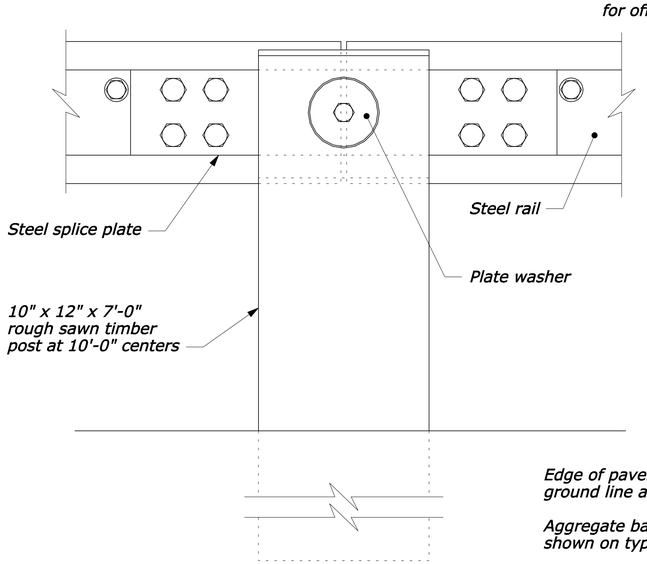

ELEVATION
POST CONNECTION

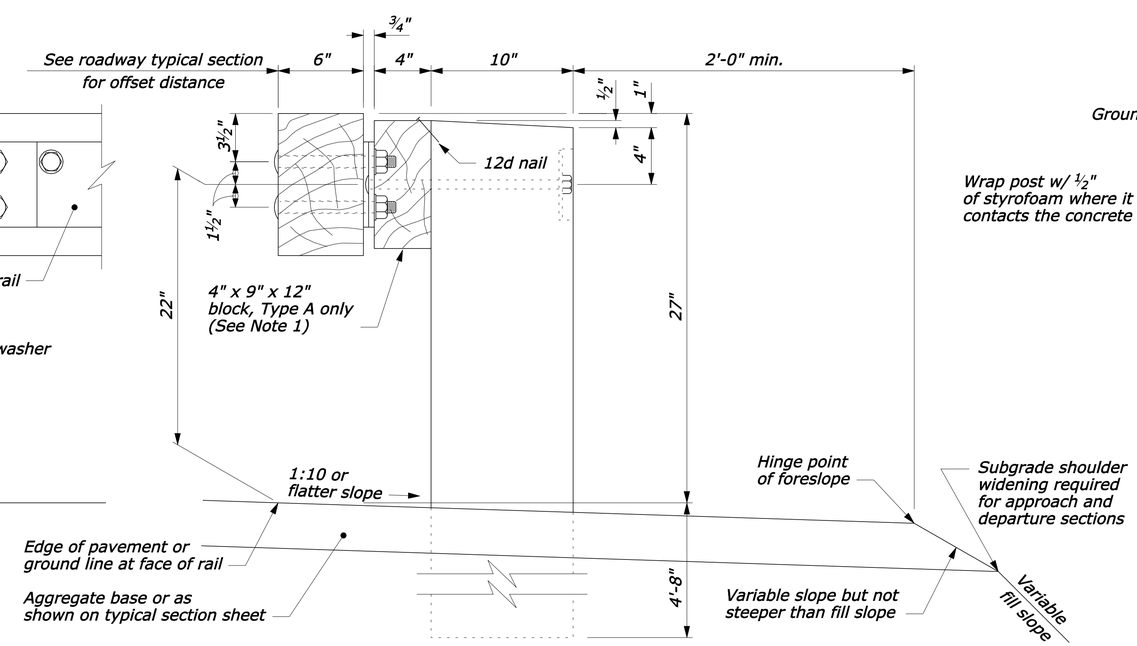

TYPICAL GUARDRAIL CROSS SECTION

NO SCALE

U.S. DEPARTMENT OF TRANSPORTATION
FEDERAL HIGHWAY ADMINISTRATION
FEDERAL LANDS HIGHWAY

U.S. CUSTOMARY STANDARD

STEEL-BACKED TIMBER GUARDRAIL TYPE A & TYPE B

STANDARD APPROVED FOR USE 3/1990
REVISED: 4/1994 6/2005

STANDARD 617-60

STATE OF MAINE
DEPARTMENT OF TRANSPORTATION

BR-1266(500)X

WIN 12665.00

BRIDGE NO. 3096

BRIDGE PLANS

STATE OF MAINE · Steven M. Hodgdon · 11206 · LICENSED PROFESSIONAL ENGINEER

	BY	DATE
PROJ. MANAGER	N. BENOIT	
DESIGN-DETAILED		
CHECKED-REVIEWED		
DESIGN2-DETAILED2		
DESIGN3-DETAILED3		
REVISIONS 1		
REVISIONS 2		
REVISIONS 3		
REVISIONS 4		
FIELD CHANGES		

SIGNATURE
11206
P.E. NUMBER
2/15/2012
DATE

SEWALL'S BRIDGE
YORK RIVER
YORK COUNTY
YORK

TIMBER GUARDRAIL DETAILS (1 OF 2)

SHEET NUMBER
44
OF 50

Filename: ...\cad\st\planset\044_Rail_07.dgn Division: Structures Username: kwentworth Date:2/15/2012

$DATE$

$PATH$

STATE	PROJECT	SHEET NUMBER

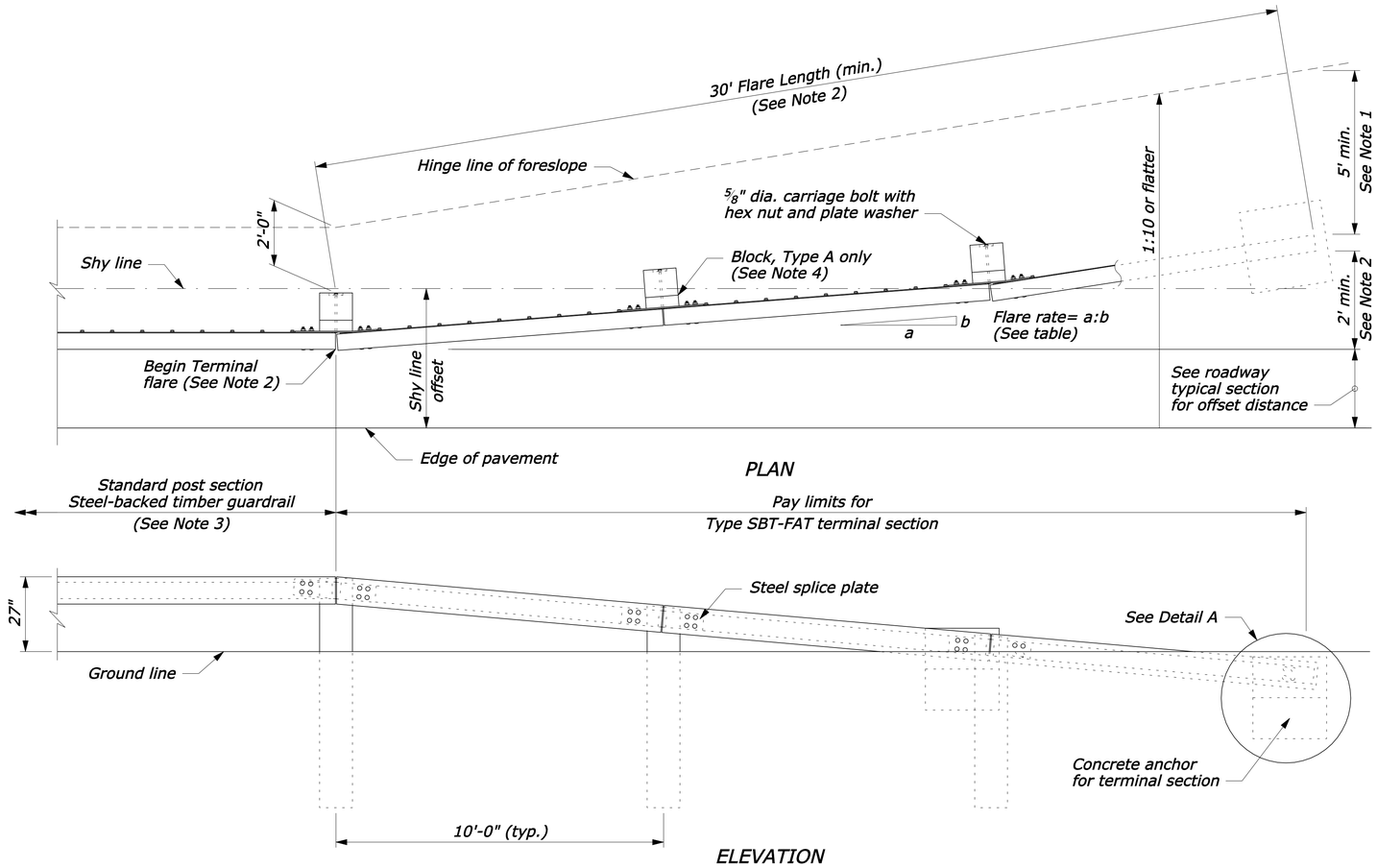

APPROACH & DEPARTURE FLARE WITH FLARED ANCHOR TERMINAL (FAT)

NOTE:

1. Extend the fill widening a minimum of 5 feet behind the guardrail, unless otherwise directed by the ~~CO.~~ Resident.
2. The guardrail flare shown in the plan view is the minimum length and rate required. As directed by the Resident ~~CO,~~ flare the guardrail so that the terminal section is outside the clear zone. If the terminal section cannot be located outside the clear zone, it should be flared as far as practical from the road at the maximum rate indicated on the Guardrail Flare Rates table.
3. See Standard 617-60, Steel-Backed Timber Guardrail, Type SBTA and SBTB, for timber, structural steel, and hardware details.
4. On the Type A, blocked-out guardrail, include the blocks in terminal section, except on the concrete anchor. For the Type B, non-blocked-out guardrail, no blocks are included.

GUARDRAIL FLARE RATE TABLE

Design Speed (mph)	Shy line offset (ft)	Flare rate inside shy line (a:b)	Flare rate outside shy line (a:b)
~~60~~	~~8.0~~	~~26:1~~	~~14:1~~
~~50~~	~~6.5~~	~~21:1~~	~~11:1~~
~~40~~	~~5.0~~	~~16:1~~	~~8:1~~
30 and less	3.5	13:1	7:1

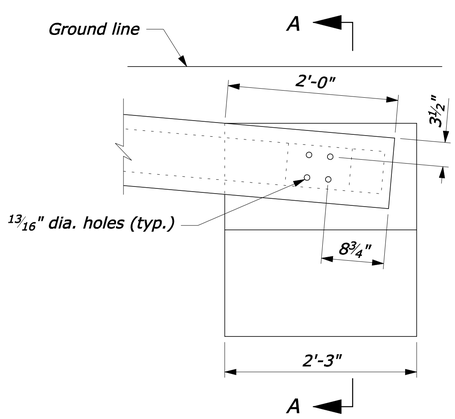

DETAIL A

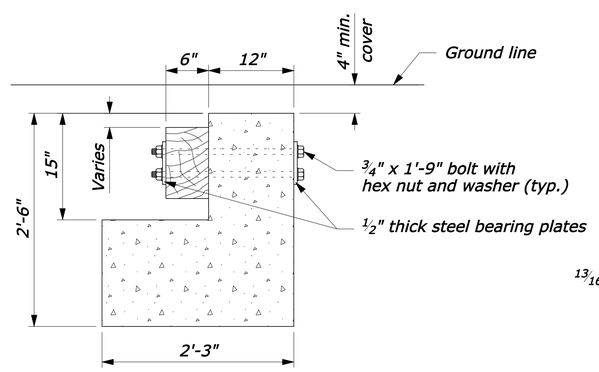

SECTION A-A

CONCRETE ANCHOR

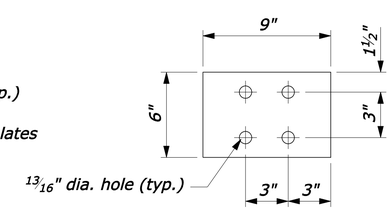

STEEL BEARING PLATE

NO SCALE

U.S. DEPARTMENT OF TRANSPORTATION
FEDERAL HIGHWAY ADMINISTRATION
FEDERAL LANDS HIGHWAY

U.S. CUSTOMARY STANDARD

STEEL-BACKED TIMBER GUARDRAIL TERMINAL SECTION TYPE SBT-FAT

STANDARD APPROVED FOR USE 1/1990
REVISED: 4/1994 6/2005
DRAFT: 9/2007

STANDARD 617-61

STATE OF MAINE
DEPARTMENT OF TRANSPORTATION

BR-1266(500)X

WIN 12665.00

BRIDGE NO. 3096

BRIDGE PLANS

STATE OF MAINE — Steven M. Hodgdon — LICENSED PROFESSIONAL ENGINEER

PROJ. MANAGER	N. BENOIT	BY	DATE
DESIGN-DETAILED	...	...	...
CHECKED-REVIEWED	...	...	...
DESIGN2-DETAILED2	...	...	...
DESIGN3-DETAILED3	...	...	...
REVISIONS 1	...	...	...
REVISIONS 2	...	...	...
REVISIONS 3	...	...	...
REVISIONS 4	...	...	...
FIELD CHANGES	...	...	...

SIGNATURE
11206
P.E. NUMBER
2/15/2012
DATE

SEWALL'S BRIDGE
YORK RIVER
YORK COUNTY
YORK

TIMBER GUARDRAIL DETAILS (2 OF 2)

SHEET NUMBER
45
OF 50

Filename: ...\cad\st\planset\045_Rail_06.dgn Division: Structures Username: kwentworth Date:2/15/2012

$PATH$ $DATE$

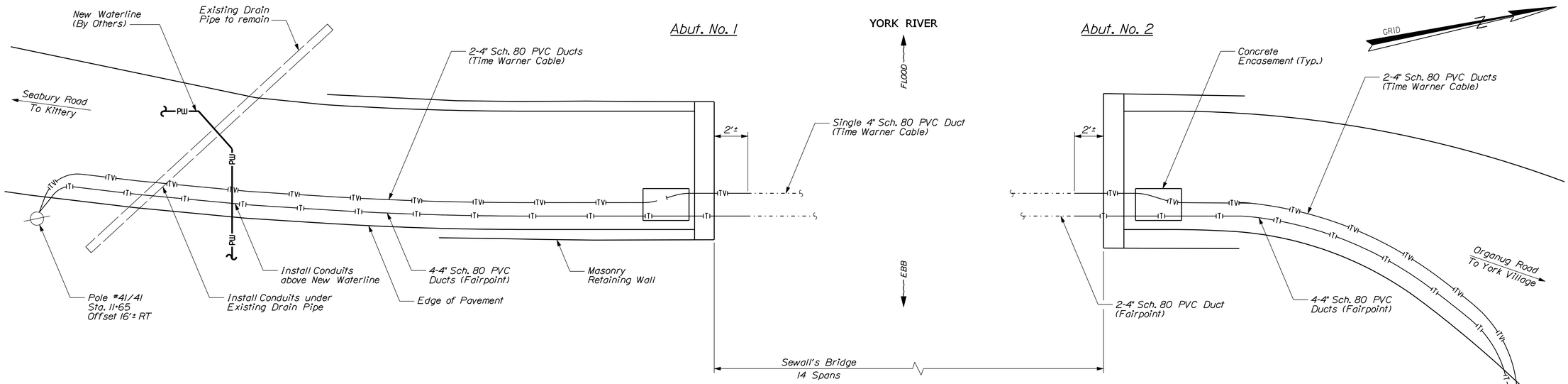

SCHEMATIC CONDUIT PLAN

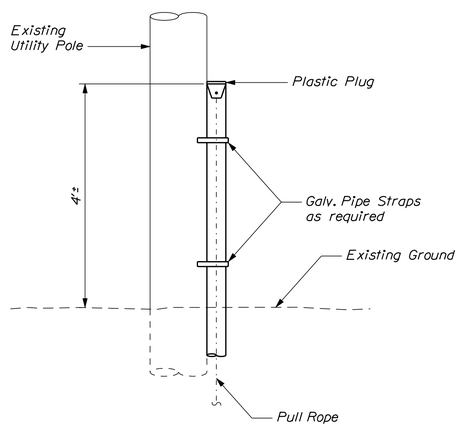

UTILITY POLE DETAIL

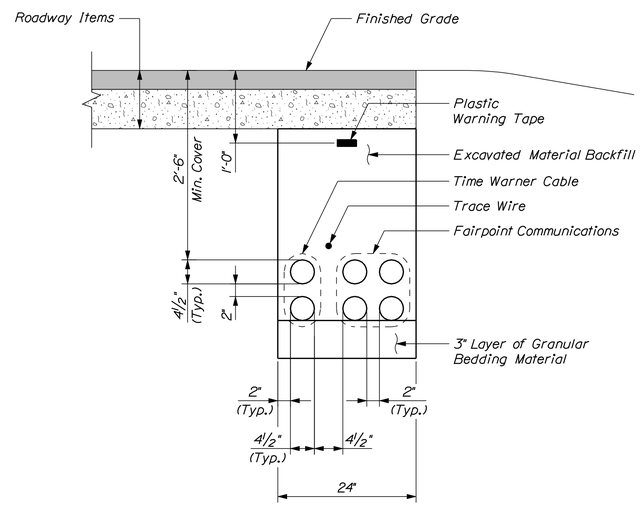

TYPICAL UTILITY
TRENCH DETAIL

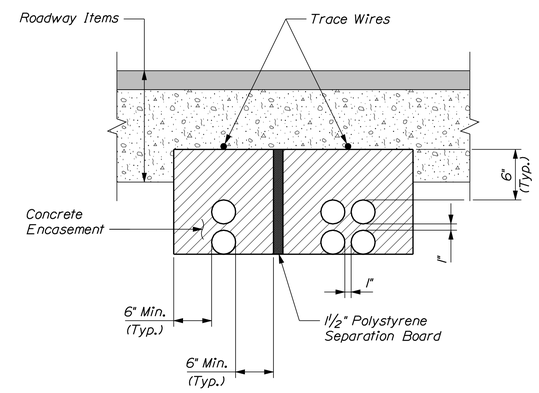

CONCRETE ENCASEMENT DETAIL
FOR SHALLOW COVER

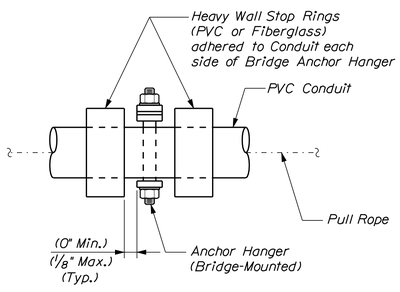

CONDUIT ANCHOR DETAIL
@ SPAN #8

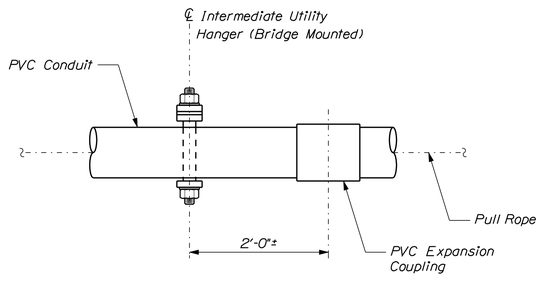

CONDUIT EXPANSION COUPLER DETAIL
@ SPAN #2 AND #13

KEY

- Underground Cable Conduit (Time Warner Cable)
- Underground Telephone/ Communications Conduit (Fairpoint)
- Proposed Waterline (By Others)

NOTES

1. Proposed conduit locations are approximate and shall be determined by field conditions.
2. See Contract Special Provisions Section 104 and 626.
3. Buried Conduit shall be 4" nom. Sch. 80 PVC. All Bends shall be less than or equal to 45 degrees with a minimum radius of 36 inches.
4. Contractor shall place conduit to avoid new waterline (by others).
5. Expansion couplings on bridge shall be heavy wall PVC, fully gasketed, with an 8 inch travel capacity.
6. Lower conduits shall terminate at bridge approximately 2 feet beyond backwalls as shown. Ends shall be capped with plastic plugs equipped with pull rope tabs.
7. Install ½" diameter polypropylene pull rope in PVC conduits. Secure ends to plastic plugs equipped with pull rope tabs.

STATE OF MAINE
DEPARTMENT OF TRANSPORTATION

BR-1266(500)X

PIN
PIN 12665.00

BRIDGE PLANS

BRIDGE NO. 3096

STATE OF MAINE · Steven M. Hodgdon · No. 11206 · LICENSED PROFESSIONAL ENGINEER

PROJ. MANAGER	N. BENOIT		
DESIGN-DETAILED	JAW	KDW	2\12
CHECKED-REVIEWED	SMH	LCG	2\12
DESIGN2-DETAILED2	LSG	CLC	2\12
DESIGN3-DETAILED3	---	---	---
REVISIONS 1	---	---	---
REVISIONS 2	---	---	---
REVISIONS 3	---	---	---
REVISIONS 4	---	---	---
FIELD CHANGES	---	---	---

SIGNATURE	
P.E. NUMBER	11206
DATE	2/15/2012

SEWALL'S BRIDGE
YORK RIVER
YORK COUNTY
YORK

UTILITY DETAILS (1 OF 3)

SHEET NUMBER
46
OF 50

Filename: ...\cad\st\planset\046_util_04.dgn Division: Structures Username: kwentworth Date:2/15/2012

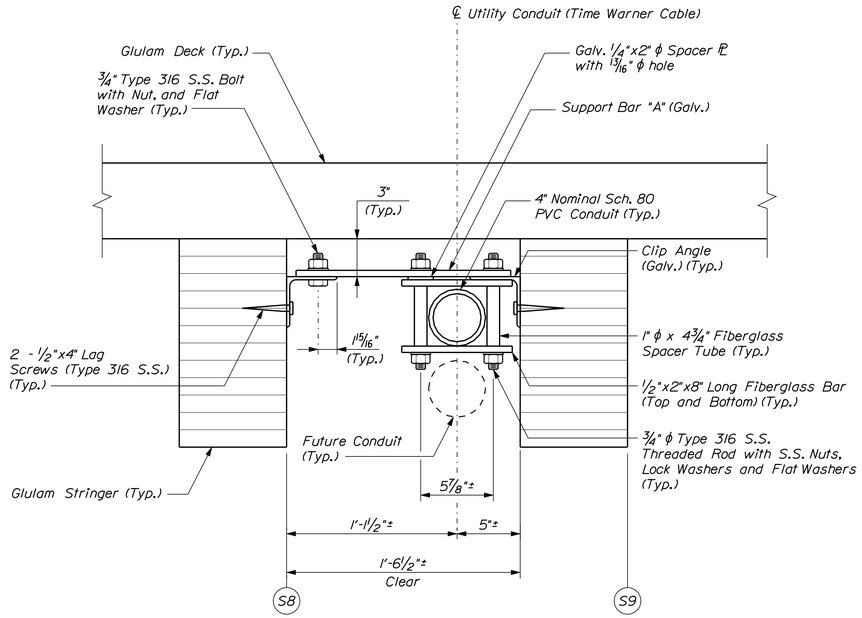

INTERMEDIATE CONDUIT SUPPORT - GLULAM SPANS

(Spans 1, 3, 5, 7, 11, and 13 shown. Spans 2, 4, 6, 8, 10, and 14 similar except installed opposite hand)

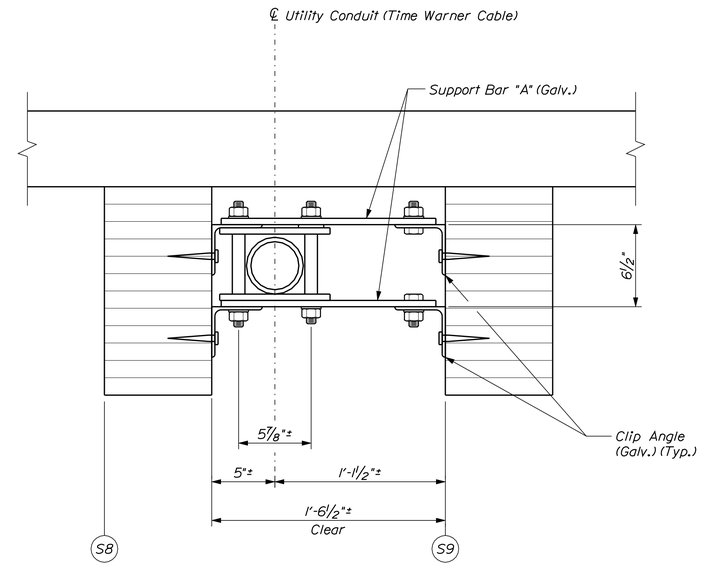

ANCHORED CONDUIT SUPPORT - GLULAM SPAN

(Span 8)

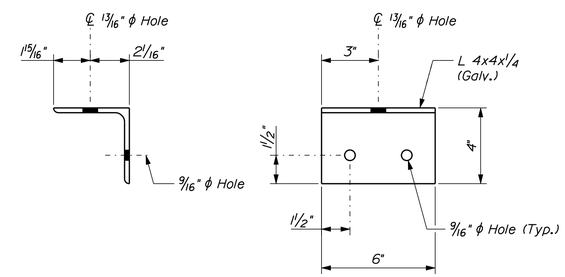

CLIP ANGLE DETAILS

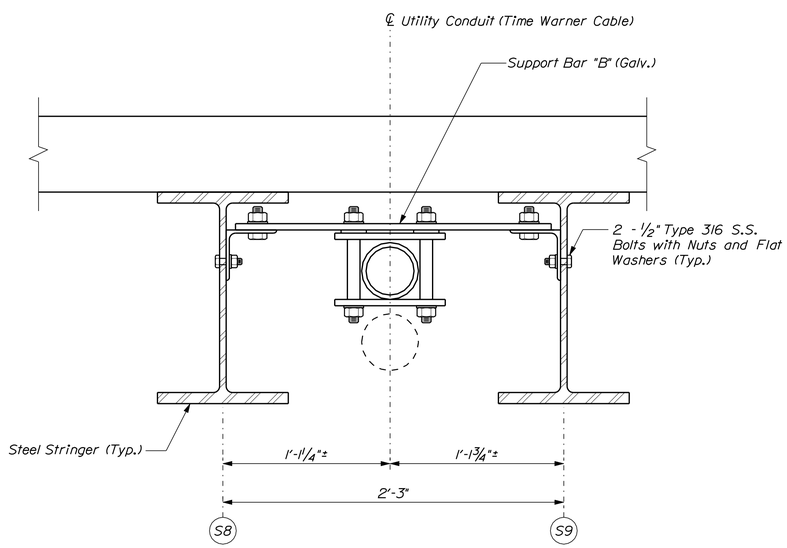

INTERMEDIATE CONDUIT SUPPORT - STEEL SPAN #12

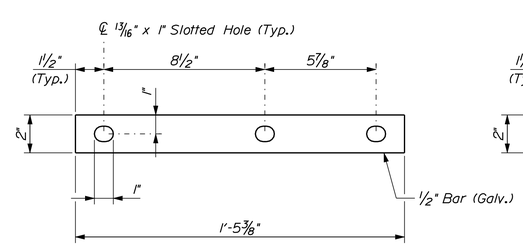

SUPPORT BAR "A" DETAIL

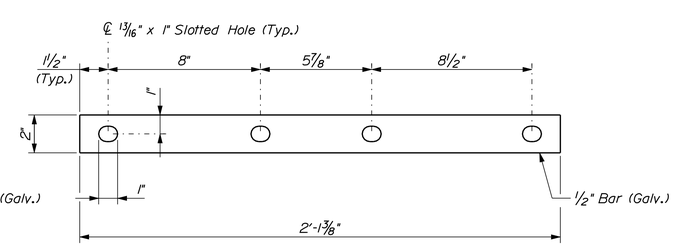

SUPPORT BAR "B" DETAIL

NOTE

1. See Framing Plan Sheets for conduit support system locations.

STATE OF MAINE
DEPARTMENT OF TRANSPORTATION

BR-1266(500)X

WIN 12665.00

BRIDGE NO. 3096

BRIDGE PLANS

STATE OF MAINE — Steven M. Hodgdon — 11206 — LICENSED PROFESSIONAL ENGINEER

PROJ. MANAGER	N. BENOIT	BY	DATE
DESIGN-DETAILED	LSG	KDW	2\12
CHECKED-REVIEWED	SMH	LSG	2\12
DESIGN2-DETAILED2	---	---	---
DESIGN3-DETAILED3	---	---	---
REVISIONS 1	---	---	---
REVISIONS 2	---	---	---
REVISIONS 3	---	---	---
REVISIONS 4	---	---	---
FIELD CHANGES	---	---	---

SIGNATURE: 11206 — P.E. NUMBER

2/15/2012 — DATE

SEWALL'S BRIDGE
YORK RIVER
YORK COUNTY
YORK

UTILITY DETAILS (2 OF 3)

SHEET NUMBER

47

OF 50

Filename: ...\cad\st\planset\047_util_02.dgn Division: Structures Username: kwentworth Date:2/15/2012

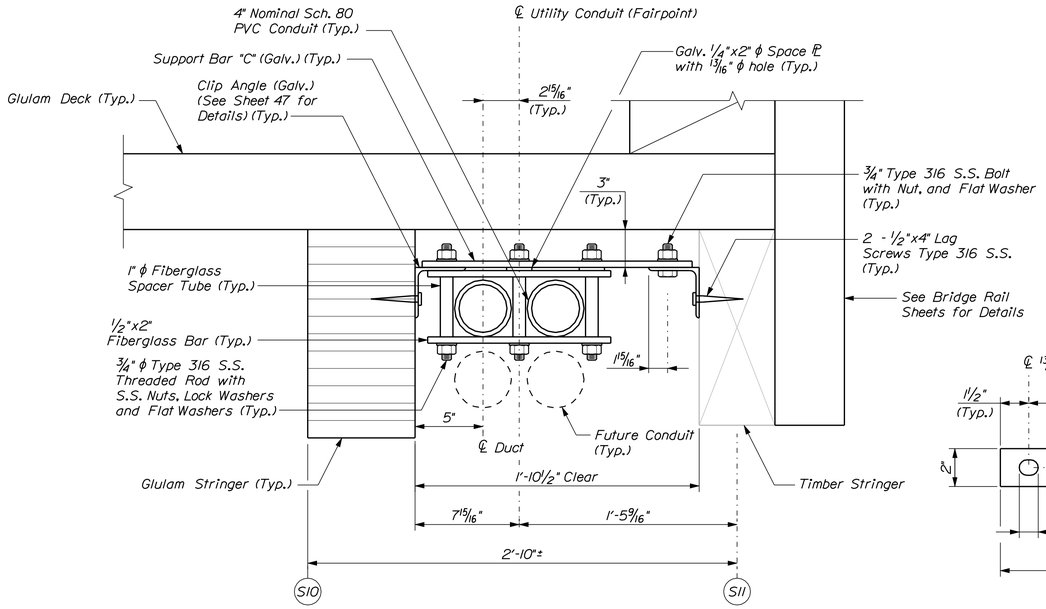

INTERMEDIATE CONDUIT SUPPORT - GLULAM SPANS

(Spans 2, 4, 6, 8, 10, and 14)

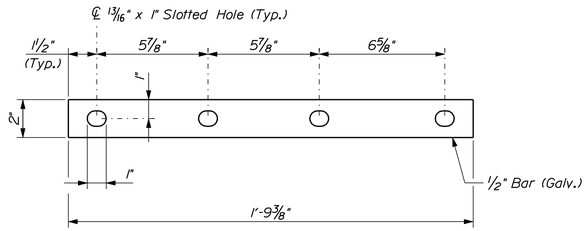

SUPPORT BAR "C" DETAIL

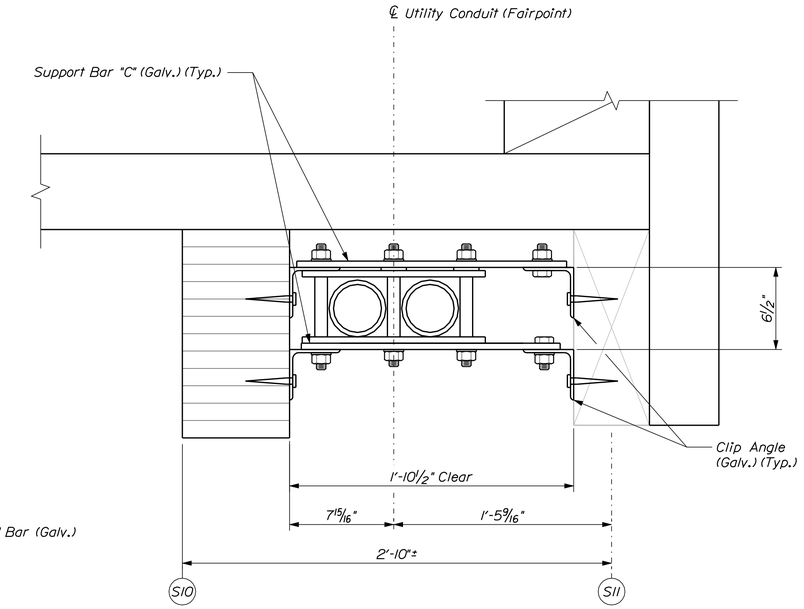

ANCHORED CONDUIT SUPPORT

(Span 8)

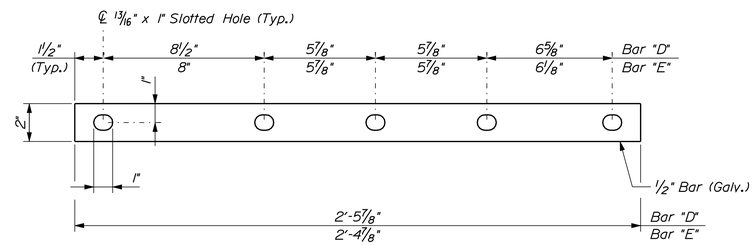

SUPPORT BAR "D" & "E" DETAIL

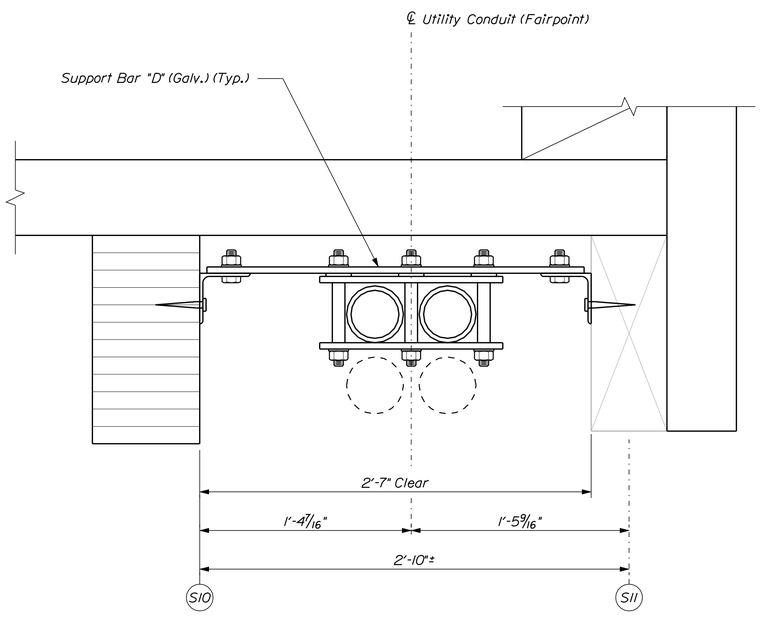

INTERMEDIATE CONDUIT SUPPORT - GLULAM SPANS

(Spans 1, 3, 5, 7, 9, 11, and 13)

NOTE

1. See Framing Plan Sheets for conduit support system locations.

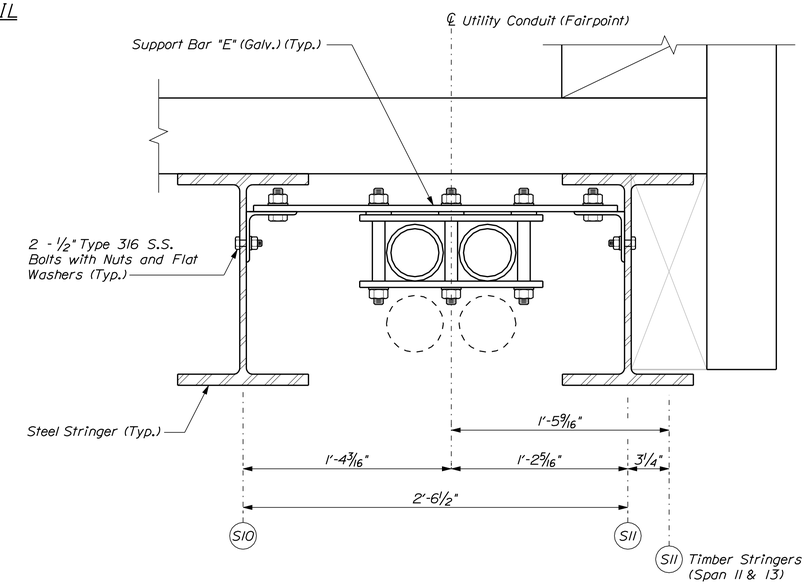

INTERMEDIATE CONDUIT SUPPORT - STEEL SPAN #12

STATE OF MAINE
DEPARTMENT OF TRANSPORTATION

BR-1266(500)X

WIN 12665.00

BRIDGE NO. 3096

BRIDGE PLANS

STATE OF MAINE — Steven M. Hodgdon — No. 11206 — LICENSED PROFESSIONAL ENGINEER

Steven M. Hodgdon
SIGNATURE

11206
P.E. NUMBER

2/15/2012
DATE

PROJ. MANAGER	N. BENOIT		
DESIGN-DETAILED	LSG	KDW	2\12
CHECKED-REVIEWED	SMH	LSG	2\12
DESIGN2-DETAILED2	---	---	---
DESIGN3-DETAILED3	---	---	---
REVISIONS 1	---	---	---
REVISIONS 2	---	---	---
REVISIONS 3	---	---	---
REVISIONS 4	---	---	---
FIELD CHANGES	---	---	---

SEWALL'S BRIDGE
YORK RIVER
YORK COUNTY
YORK

UTILITY DETAILS (3 OF 3)

SHEET NUMBER

48

OF 50

Filename: ...\cad\st\planset\048_util_03.dgn Division: Structures Username: kwentworth Date:2/15/2012

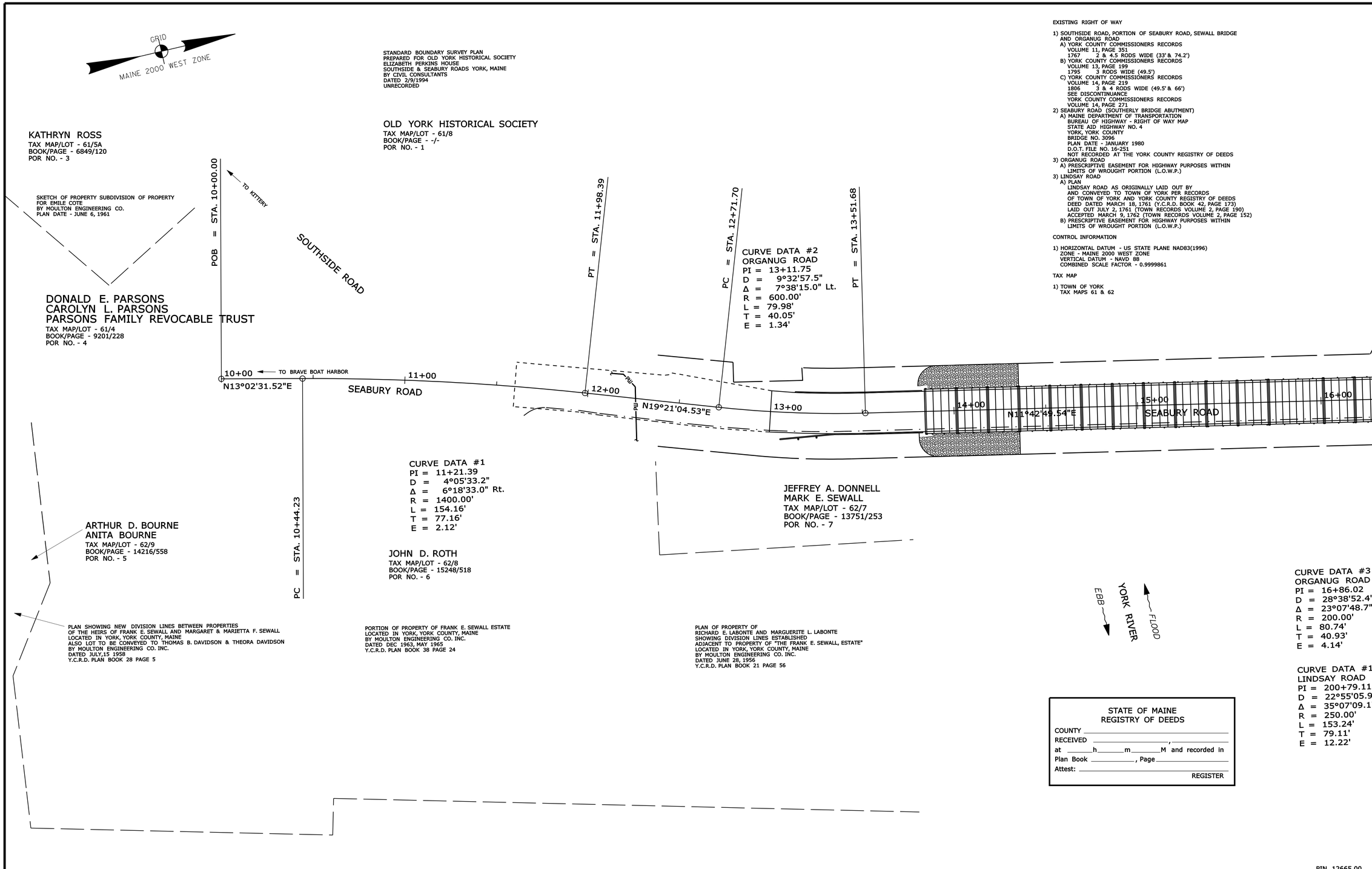

EXISTING RIGHT OF WAY

1) SOUTHSIDE ROAD, PORTION OF SEABURY ROAD, SEWALL BRIDGE AND ORGANUG ROAD
   A) YORK COUNTY COMMISSIONERS RECORDS
      VOLUME 11, PAGE 351
      1767 2 & 4.5 RODS WIDE (33' & 74.2')
   B) YORK COUNTY COMMISSIONERS RECORDS
      VOLUME 13, PAGE 199
      1795 3 RODS WIDE (49.5')
   C) YORK COUNTY COMMISSIONERS RECORDS
      VOLUME 14, PAGE 219
      1806 3 & 4 RODS WIDE (49.5' & 66')
      SEE DISCONTINUANCE
      YORK COUNTY COMMISSIONERS RECORDS
      VOLUME 14, PAGE 271
2) SEABURY ROAD (SOUTHERLY BRIDGE ABUTMENT)
   A) MAINE DEPARTMENT OF TRANSPORTATION
      BUREAU OF HIGHWAY - RIGHT OF WAY MAP
      STATE AID HIGHWAY NO. 4
      YORK, YORK COUNTY
      BRIDGE NO. 3096
      PLAN DATE - JANUARY 1980
      D.O.T. FILE NO. 16-251
      NOT RECORDED AT THE YORK COUNTY REGISTRY OF DEEDS
3) ORGANUG ROAD
   A) PRESCRIPTIVE EASEMENT FOR HIGHWAY PURPOSES WITHIN LIMITS OF WROUGHT PORTION (L.O.W.P.)
3) LINDSAY ROAD
   A) PLAN
      LINDSAY ROAD AS ORIGINALLY LAID OUT BY
      AND CONVEYED TO TOWN OF YORK PER RECORDS
      OF TOWN OF YORK AND YORK COUNTY REGISTRY OF DEEDS
      DEED DATED MARCH 18, 1761 (Y.C.R.D. BOOK 42, PAGE 173)
      LAID OUT JULY 2, 1761 (TOWN RECORDS VOLUME 2, PAGE 190)
      ACCEPTED MARCH 9, 1762 (TOWN RECORDS VOLUME 2, PAGE 152)
   B) PRESCRIPTIVE EASEMENT FOR HIGHWAY PURPOSES WITHIN LIMITS OF WROUGHT PORTION (L.O.W.P.)

CONTROL INFORMATION

1) HORIZONTAL DATUM - US STATE PLANE NAD83(1996)
   ZONE - MAINE 2000 WEST ZONE
   VERTICAL DATUM - NAVD 88
   COMBINED SCALE FACTOR - 0.9999861

TAX MAP

1) TOWN OF YORK
   TAX MAPS 61 & 62

SYMBOLS

- WELL
- GROUNDING UNIT LINE
- CONSTRUCTION UNIT LINE
- PROPERTY LINE
- LIMITS OF WROUGHT PORTION (L.O.W.P.)
- EXISTING RIGHT OF WAY
- NEW RIGHT OF WAY
- NEW ROW WITHIN EXIST. ROW
- CONTROL OF ACCESS
- IP or IPF (IRON PIPE or PIN FOUND)
- ST. (SEPTIC TANK)
- (ROW MONUMENT)
- (TRAVERSE POINT)
- WATER LINE
- GAS LINE
- ELECTRIC LINE
- TELEPHONE LINE
- SEWER LINE

ITEM	TECH	CHECKED
BASE MAP		
EXIST. R/W	G.L.L.	C.W.K.
PROP. LINES	G.L.L.	
AREAS		

STATE OF MAINE
DEPARTMENT OF TRANSPORTATION
16 STATE HOUSE STATION - AUGUSTA, ME 04333-0016

YORK
RIGHT OF WAY MAP

PIN 12665.00

REVISIONS			
NO.	DATE	DESCRIPTION	BY

PLAN FILED IN PLAN BOOK		PAGE	COUNTY RECORD			
NO.	GRANTOR	INSTRUMENT	DATE	BOOK	PAGE

DAVID BERNHARDT
COMMISSIONER
KENNETH L. SWEENEY
CHIEF ENGINEER
DATE

STATE OF MAINE
CHRISTOPHER W. KNIGHT 2257
PROFESSIONAL LAND SURVEYOR

To the best of my knowledge and belief the Highway Right of Way lines depicted hereon are based upon a survey conforming to the Standards of Practice promulgated by the Maine Board of Licensure for Professional Land Surveyors 02-360 CMR, Chapter 90; Exceptions: (1) No separate survey report, (2) Monumentation only as shown on plan. See sheet X of this plan set for coordinates. (3) Other boundary lines, including lines between abutters are approximate and for general reference purposes only.

SEABURY RD/ORGANUG RD/LINDSEY RD
TOWN WAYS
YORK YORK COUNTY
STATE PROJECT NO. 12665.00

JUNE 2011 | RIGHT-OF-WAY MAP | D.O.T. FILE NO. 16-476
SCALE 1" = 25' | SHEET 1 OF 2

SHEET NUMBER
49
OF 50

Filename: ...\cad\st\049_RWPLAN1.dgn Division: Structures Username: kwentworth Date:12/23/2011

EXISTING RIGHT OF WAY

1) SOUTHSIDE ROAD, PORTION OF SEABURY ROAD, SEWALL BRIDGE AND ORGANUG ROAD
   A) YORK COUNTY COMMISSIONERS RECORDS
      VOLUME 11, PAGE 351
      1767 2 & 4.5 RODS WIDE (33' & 74.2')
   B) YORK COUNTY COMMISSIONERS RECORDS
      VOLUME 13, PAGE 199
      1795 3 RODS WIDE (49.5')
   C) YORK COUNTY COMMISSIONERS RECORDS
      VOLUME 14, PAGE 219
      1806 3 & 4 RODS WIDE (49.5' & 66')
      SEE DISCONTINUANCE
      YORK COUNTY COMMISSIONERS RECORDS
      VOLUME 14, PAGE 271
2) SEABURY ROAD (SOUTHERLY BRIDGE ABUTMENT)
   A) MAINE DEPARTMENT OF TRANSPORTATION
      BUREAU OF HIGHWAY - RIGHT OF WAY MAP
      STATE AID HIGHWAY NO. 4
      YORK, YORK COUNTY
      BRIDGE NO. 3096
      PLAN DATE - JANUARY 1980
      D.O.T. FILE NO. 16-251
      NOT RECORDED AT THE YORK COUNTY REGISTRY OF DEEDS
3) ORGANUG ROAD
   A) PRESCRIPTIVE EASEMENT FOR HIGHWAY PURPOSES WITHIN LIMITS OF WROUGHT PORTION (L.O.W.P.)
3) LINDSAY ROAD
   A) PLAN
      LINDSAY ROAD AS ORIGINALLY LAID OUT BY AND CONVEYED TO TOWN OF YORK PER RECORDS OF TOWN OF YORK AND YORK COUNTY REGISTRY OF DEEDS
      DEED DATED MARCH 18, 1761 (Y.C.R.D. BOOK 42, PAGE 173)
      LAID OUT JULY 2, 1761 (TOWN RECORDS VOLUME 2, PAGE 190)
      ACCEPTED MARCH 9, 1762 (TOWN RECORDS VOLUME 2, PAGE 152)
   B) PRESCRIPTIVE EASEMENT FOR HIGHWAY PURPOSES WITHIN LIMITS OF WROUGHT PORTION (L.O.W.P.)

CONTROL INFORMATION

1) HORIZONTAL DATUM - US STATE PLANE NAD83(1996)
   ZONE - MAINE 2000 WEST ZONE
   VERTICAL DATUM - NAVD 88
   COMBINED SCALE FACTOR - 0.9999861

TAX MAP

1) TOWN OF YORK
   TAX MAPS 61 & 62

LOT LINE ADJUSTMENT FOR PROPERTY AT
207 & 209 ORGANUG ROAD
YORK, YORK COUNTY, MAINE
OWNED BY DIEDRE BRENNEN & STEVEN BRENNEN
209 ORGANUG ROAD YORK, MAINE 03909
BY EASTERLY SURVEYING. INC.
DATED JUNE 26, 2000
Y.C.R.D. PLAN BOOK 256 PAGE 44

SURVEY OF LAND
OF HELINDA E. HUTCHINS
BY ANDERSON - LIVINGSTON
PLAN DATE - OCTOBER 1991
FILE NO. 5118
PLAN NO. 964911001
Y.C.R.D. PLAN BOOK 204, PAGE 15

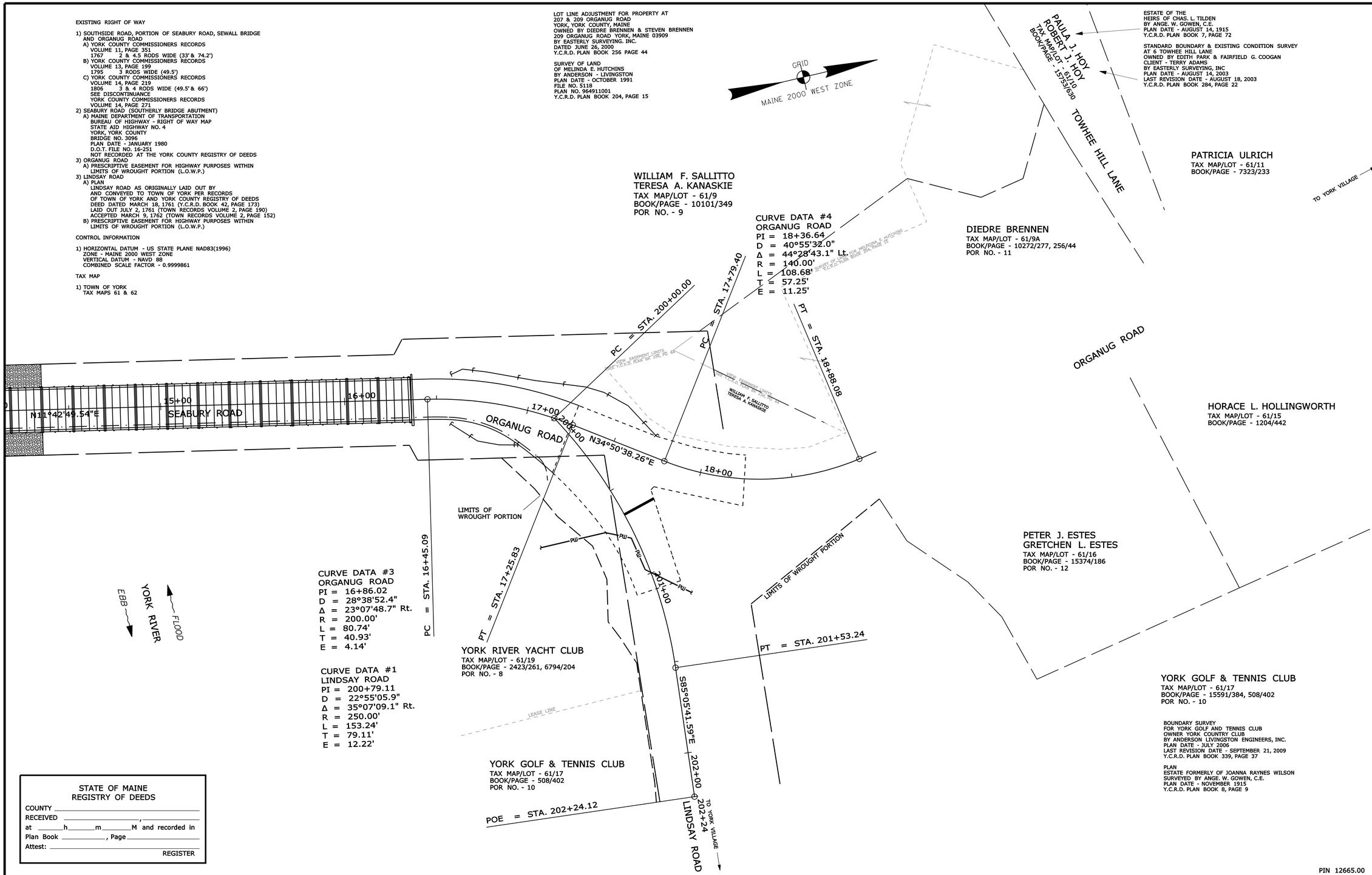

STATE OF MAINE
REGISTRY OF DEEDS
COUNTY _____
RECEIVED _____, _____
at _____h_____m_____M and recorded in
Plan Book _____, Page _____
Attest: _____
REGISTER

PIN 12665.00

SYMBOLS
- IP or ● IPF (IRON PIPE or PIN FOUND)
- ST. (SEPTIC TANK)
- (ROW MONUMENT)
- &BM (TRAVERSE POINT)
- WELL (WELL)
- BUILDING LIMIT LINE
- CONSERVATION LIMIT LINE
- PROPERTY LINE
- LIMITS OF WROUGHT PORTION (L.O.W.P.)
- WATER LINE
- GAS LINE
- ELECTRIC LINE
- TELEPHONE LINE
- SEWER LINE
- NEW RIGHT OF WAY
- NEW ROW WITHIN EXIST. ROW
- CONTROL OF ACCESS

ITEM	TECH	CHECKED
BASE MAP		
EXIST. R/W	G.L.L.	C.W.K.
PROP. LINES	G.L.L.	
AREAS		

STATE OF MAINE
DEPARTMENT OF TRANSPORTATION
16 STATE HOUSE STATION - AUGUSTA, ME 04333-0016
YORK
RIGHT OF WAY MAP

REVISIONS

NO.	DATE	DESCRIPTION	BY

PLAN FILED IN PLAN BOOK		PAGE	COUNTY RECORD		
NO.	GRANTOR	INSTRUMENT	DATE	BOOK	PAGE

DAVID BERNHARDT
COMMISSIONER
KENNETH L. SWEENEY
CHIEF ENGINEER
DATE

STATE OF MAINE
CHRISTOPHER W. KNIGHT
2257
PROFESSIONAL LAND SURVEYOR

To the best of my knowledge and belief the Highway Right of Way lines depicted hereon are based upon a survey conforming to the Standards of Practice promulgated by the Maine Board of Licensure for Professional Land Surveyors 02-360 CMR, Chapter 90; Exceptions: (1) No separate survey report, (2) Monumentation only as shown on plan. See sheet X of this plan set for coordinates. (3) Other boundary lines, including lines between abutters are approximate and for general reference purposes only.

SEABURY RD/ORGANUG RD/LINDSEY RD
TOWN WAYS
YORK — YORK COUNTY
STATE PROJECT NO. 12665.00

JUNE 2011 | RIGHT-OF-WAY MAP | D.O.T. FILE NO. 16-476
SCALE 1" = 25' | SHEET XX OF XX

SHEET NUMBER
50
OF 50

Filename: ...\cad\st\050_RWPLAN2.dgn Division: Structures Username: kwentworth Date:12/23/2011