STATE OF MAINE
DEPARTMENT OF TRANSPORTATION

SPECIFICATIONS

Design: International Building Code 2009

DESIGN LOADING

Live Load ------ Impact of 30,000lb Vehicle @ Endwall Concrete Only
Ground Snow Load ---------- 80psf
Wind Load ---------- 90mph
---------- Exposure C, Catagory I

MATERIALS

Reinforcing Steel ---------- ASTM A615, Grade 60, Epoxy Coated
Structural Steel:
All Material (except as noted) ---------- ASTM A709, Grade 50
High Strength Bolts ---------- ASTM A325, Type I

BASIC DESIGN STRESSES

Concrete ---------- f 'c = 4,350 psi
Reinforcing Steel ---------- f y = 60,000 psi

BANGOR MAINTENANCE SALT SHED

PIN 18142.10

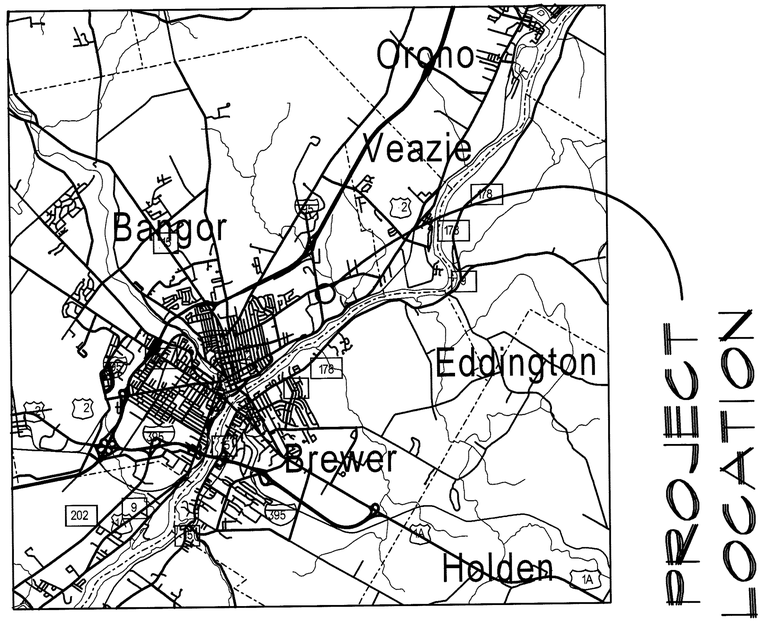

LIST OF DRAWINGS

Title Sheet ---------- 1
General Plan ---------- 2
Foundation Plan ---------- 3
Foundation Reinforcing Plan ---------- 4
Sidewalls Dimensional Details ---------- 5
Sidewalls Reinforcing Details ---------- 6
West End Wall Dimensional Details ---------- 7
West End Wall Reinforcing Details ---------- 8
East End Wall Dimensional Details ---------- 9
East End Wall Reinforcing Details ---------- 10
West End Laminated Arch Details ---------- 11
East End Laminated Arch Details ---------- 12
Electrical Plan ---------- 13

STATE OF MAINE
DEPARTMENT OF TRANSPORTATION

APPROVED	DATE
COMMISSIONER:	6/27/11
CHIEF ENGINEER:	6-27-11

STATE OF MAINE
ERIC T. CALDERWOOD
No. 9099
LICENSED
PROFESSIONAL ENGINEER

9099
P.E. NUMBER
DATE JUNE 2011

		BY	DATE
DESIGN-DETAILED	OGK	JJH	JUNE 2011
CHECKED-REVIEWED		ETC	
REVISIONS 1			
REVISIONS 2			
REVISIONS 3			
REVISIONS 4			
FIELD CHANGES			

BANGOR MAINT. SALT SHED

TITLE SHEET

SHEET NUMBER

1

CALDERWOOD ENGINEERING
225 RIVER ROAD
RICHMOND, ME 04357
TEL (207) 737-2007 FAX (207) 737-2008

Filename: ...\001_Title.dgn Workgroup: Structures Division Username: common Date:6/21/2011

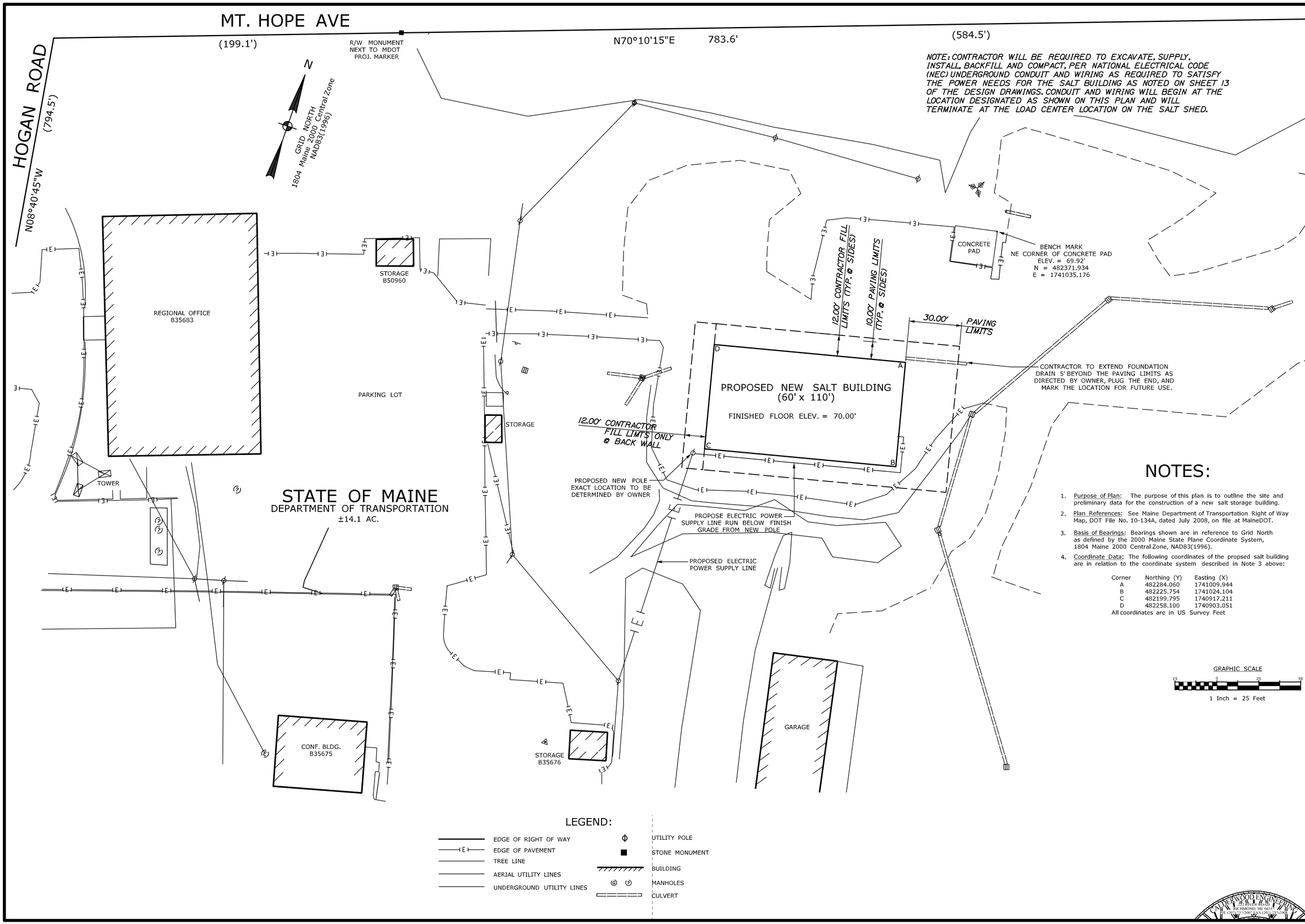

NOTES:

1. Purpose of Plan: The purpose of this plan is to outline the site and preliminary data for the construction of a new salt storage building.
2. Plan References: See Maine Department of Transportation Right of Way Map, DOT File No. 10-134A, dated July 2008, on file at MaineDOT.
3. Basis of Bearings: Bearings shown are in reference to Grid North as defined by the 2000 Maine State Plane Coordinate System, 1804 Maine 2000 Central Zone, NAD83(1996).
4. Coordinate Data: The following coordinates of the propsed salt building are in relation to the coordinate system described in Note 3 above:

Corner	Northing (Y)	Easting (X)
A	482284.060	1741009.944
B	482225.754	1741024.104
C	482199.795	1740917.211
D	482258.100	1740903.051

All coordinates are in US Survey Feet

GRAPHIC SCALE

25 0 25 50

1 Inch = 25 Feet

LEGEND:

- EDGE OF RIGHT OF WAY
- EDGE OF PAVEMENT
- TREE LINE
- AERIAL UTILITY LINES
- UNDERGROUND UTILITY LINES
- UTILITY POLE
- STONE MONUMENT
- BUILDING
- MANHOLES
- CULVERT

CALDERWOOD ENGINEERING, ETC.
STRUCTURAL ENGINEERING • DETAILING SERVICES
222 RIVER RD, RICHMOND, ME 04357 PH/FX (207)737-2007/(207) 737-2008
PREPARED FOR:
STATE OF MAINE DOT
BANGOR, MAINE SALT SHED
CEE 042-ST-11

STATE OF MAINE
ERIC S. CALDERWOOD
No. 9099
LICENSED
PROFESSIONAL ENGINEER

P.E. NUMBER 9099
DATE JUNE 2011

	BY	DATE
DESIGN-DETAILED	OGK	JUNE 2011
CHECKED-REVIEWED		
REVISIONS 1		
REVISIONS 2		
REVISIONS 3		
REVISIONS 4		
FIELD CHANGES		

BANGOR MAINTENANCE SALT SHED

GENERAL SITE PLAN
219 HOGAN ROAD, BANGOR

SHEET NUMBER

2

CALDERWOOD ENGINEERING
222 RIVER ROAD
RICHMOND, ME 04357
PH (207)737-2007 FAX (207)737-2008

Filename: ...\002_Gen Plan.dgn Workgroup: Structures Division Username: common Date:6/21/2011

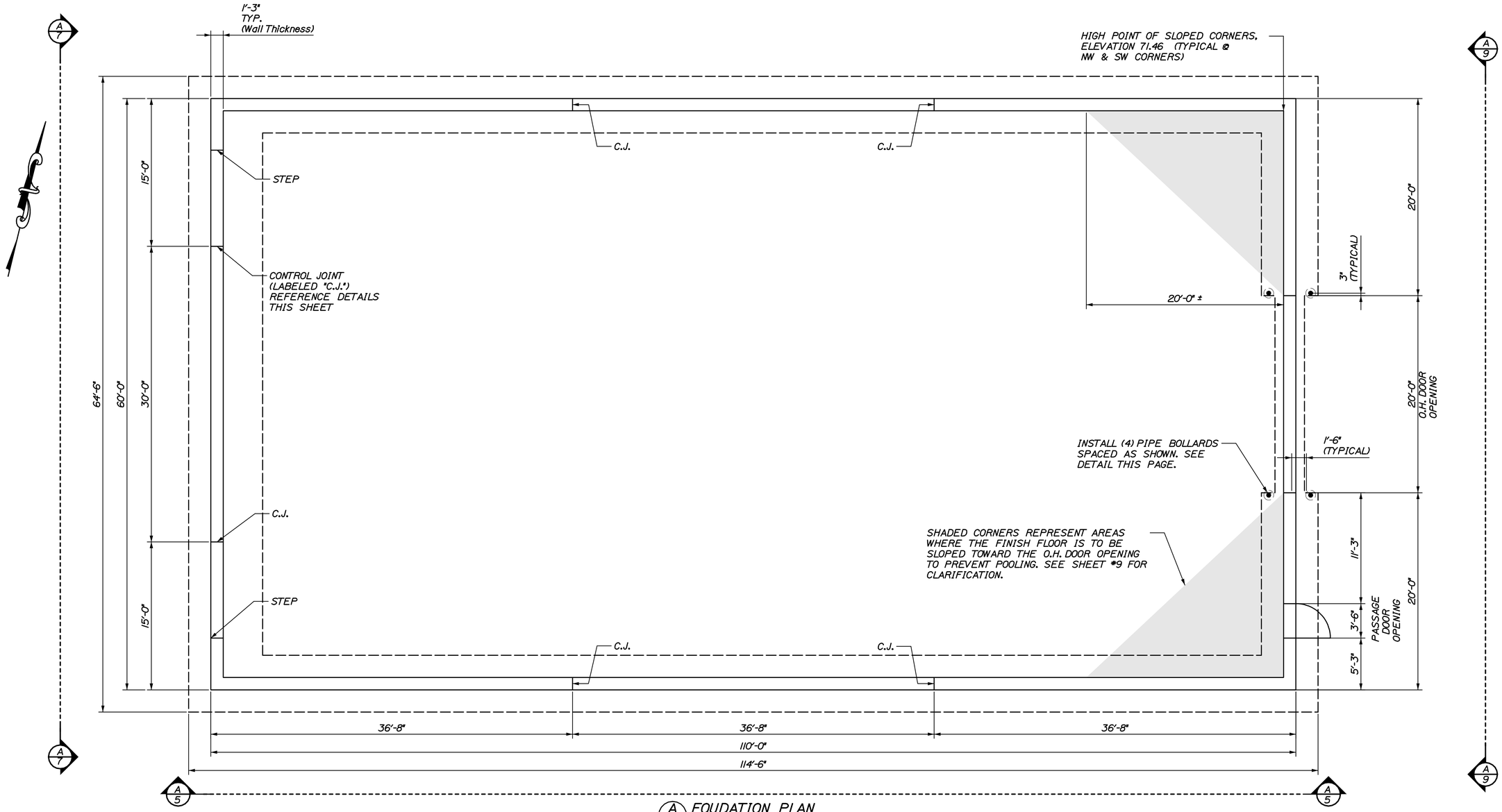

A 3 FOUDATION PLAN
SCALE: 3/16"=1'-0"

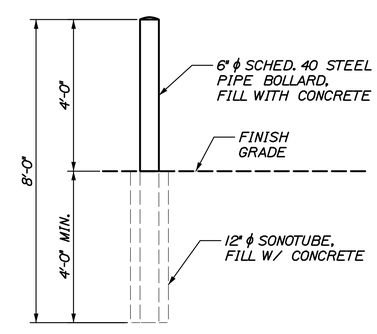

PIPE BOLLARD DETAIL
SCALE: 1/2" = 1'-0"

CALDERWOOD ENGINEERING, ETC.
STRUCTURAL ENGINEERING • DETAILING SERVICES
222 RIVER RD, RICHMOND, ME 04357 PH/FX (207)737-2007/(207) 737-2008

PREPARED FOR:
STATE OF MAINE DOT
BANGOR, MAINE SALT SHED
CEE 042-ST-11

STATE OF MAINE
ERIC A. CALDERWOOD
No. 9099
LICENSED
PROFESSIONAL ENGINEER

P.E. NUMBER 9099
DATE JUNE 2011

DESIGN-DETAILED	OGK	BY	DATE
CHECKED-REVIEWED		JJH	JUNE 2011
		ETC	
REVISIONS 1			
REVISIONS 2			
REVISIONS 3			
REVISIONS 4			
FIELD CHANGES			

BANGOR MAINTANANCE SALT SHED
FOUNDATION PLAN

SHEET NUMBER
3

Filename: ...\003_Foundation_Plan.dgnWorkgroup: Structures Division Username: common Date:6/21/2011

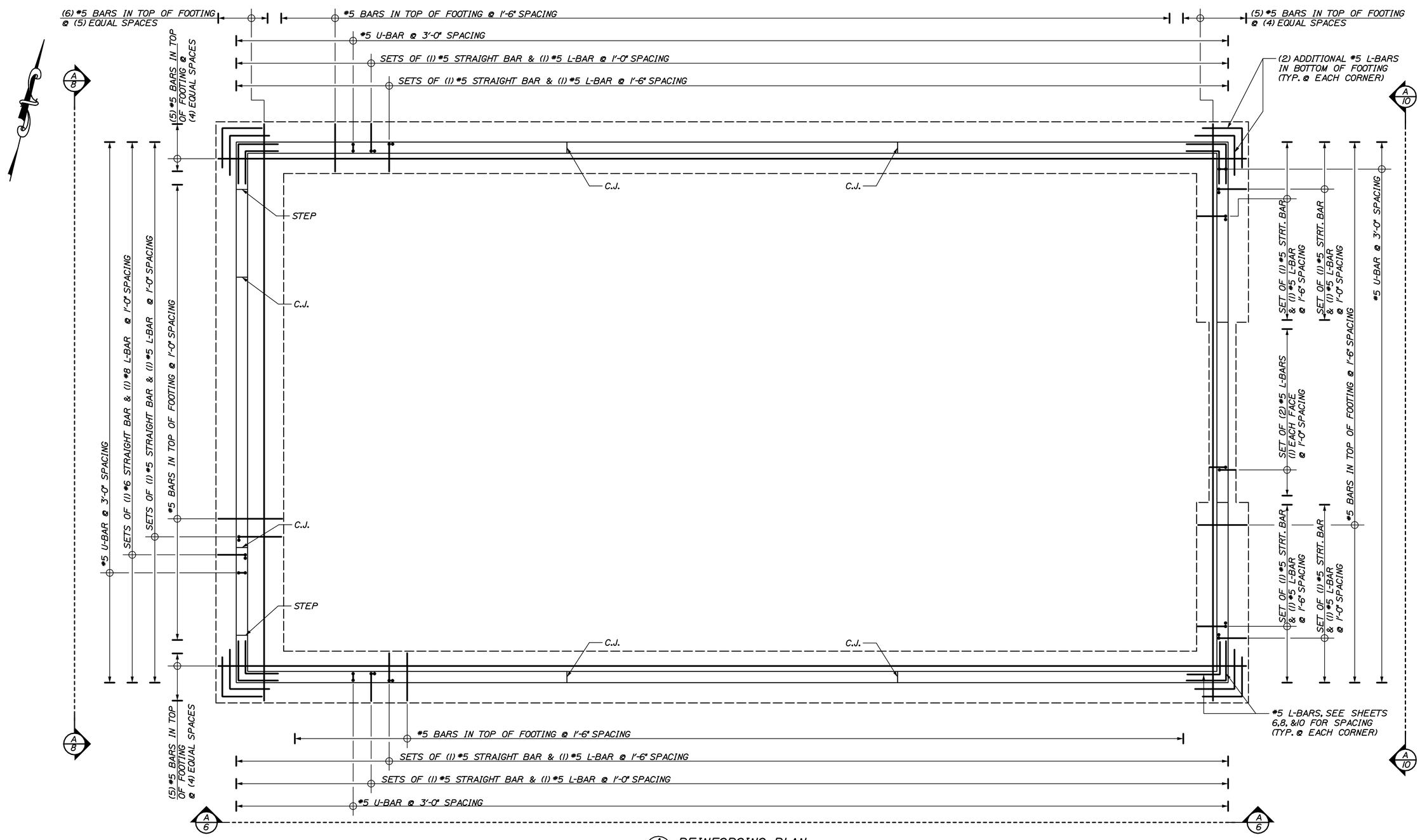

A/4 REINFORCING PLAN
SCALE: 3/16"=1'-0"

NOTE: HORIZONTAL REINFORCING STEEL IN FOUNDATION WALL NOT SHOWN, SEE SHEETS 6, 8, & 10 FOR DETAILS NOT SHOWN HERE.

CALDERWOOD ENGINEERING, ETC.
STRUCTURAL ENGINEERING • DETAILING SERVICES
222 RIVER RD, RICHMOND, ME 04357 PH/FX (207)737-2007/(207) 737-2008

PREPARED FOR:
STATE OF MAINE DOT
BANGOR, MAINE SALT SHED
CEE 042-ST-11

STATE OF MAINE
ERIC A. CALDERWOOD
No. 9099
LICENSED PROFESSIONAL ENGINEER

P.E. NUMBER 9099
DATE JUNE 2011

	BY	DATE
DESIGN-DETAILED	OGK	JJH	JUNE 2011
CHECKED-REVIEWED		ETC
REVISIONS 1		
REVISIONS 2		
REVISIONS 3		
REVISIONS 4		
FIELD CHANGES		

BANGOR MAINTANANCE SALT SHED

REINFORCING PLAN

SHEET NUMBER
4

Filename: ...\004_Reinforce_Plan.dgn Workgroup: Structures Division Username: common Date:6/21/2011

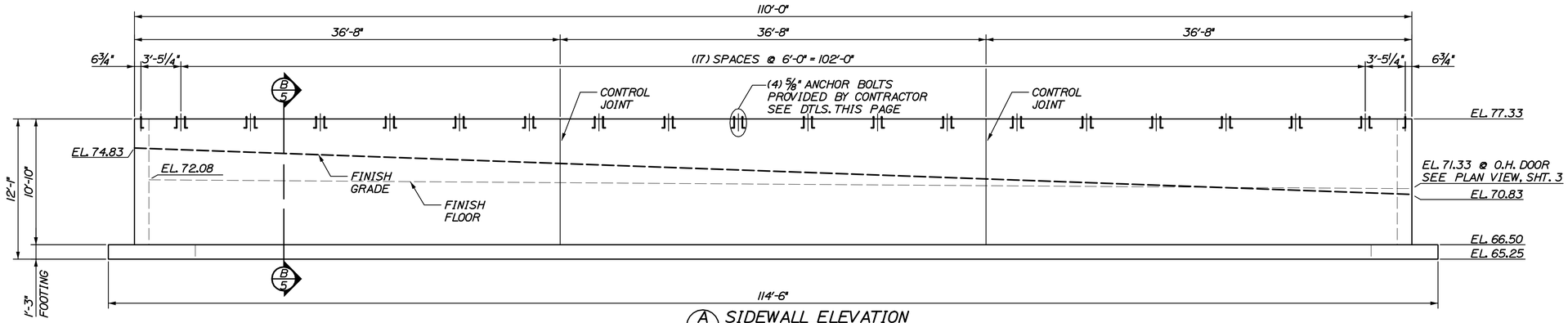

A/5 SIDEWALL ELEVATION
SCALE: 3/16" = 1'-0"
TYPICAL FOR NORTH AND SOUTH SIDEWALLS
ARCHES NOT SHOWN

NOTE:
SEE SHEETS 11 & 12 FOR LAMINATED ARCH DETAILS.
ACTUAL ANCHOR BOLT LAYOUT TO BE COORDINATED WITH THE LAMINATED ARCH MANUFACTURER.
GENERAL CONTRACTOR IS RESPONSIBLE FOR CHECKING LAYOUT OF ANCHOR BOLTS WITH ARCH BASE PLATES TO ENSURE A PROPER FIT.

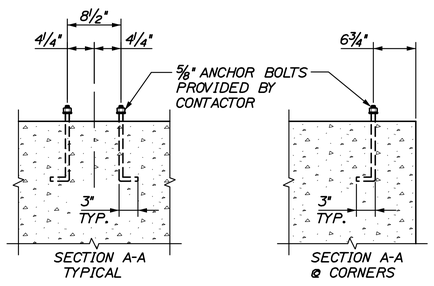

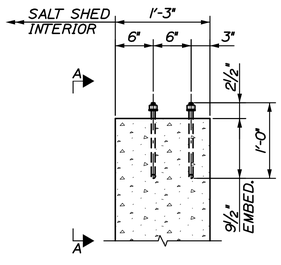

ANCHOR BOLT DETAIL
SCALE: 1" = 1'-0"

NOTE:
ANCHOR BOLT LAYOUT GIVEN IS AN EXAMPLE.
COORDINATE WITH ARCH MANUFACTURER FOR ACTUAL ANCHOR BOLT LAYOUT TO BE USED.

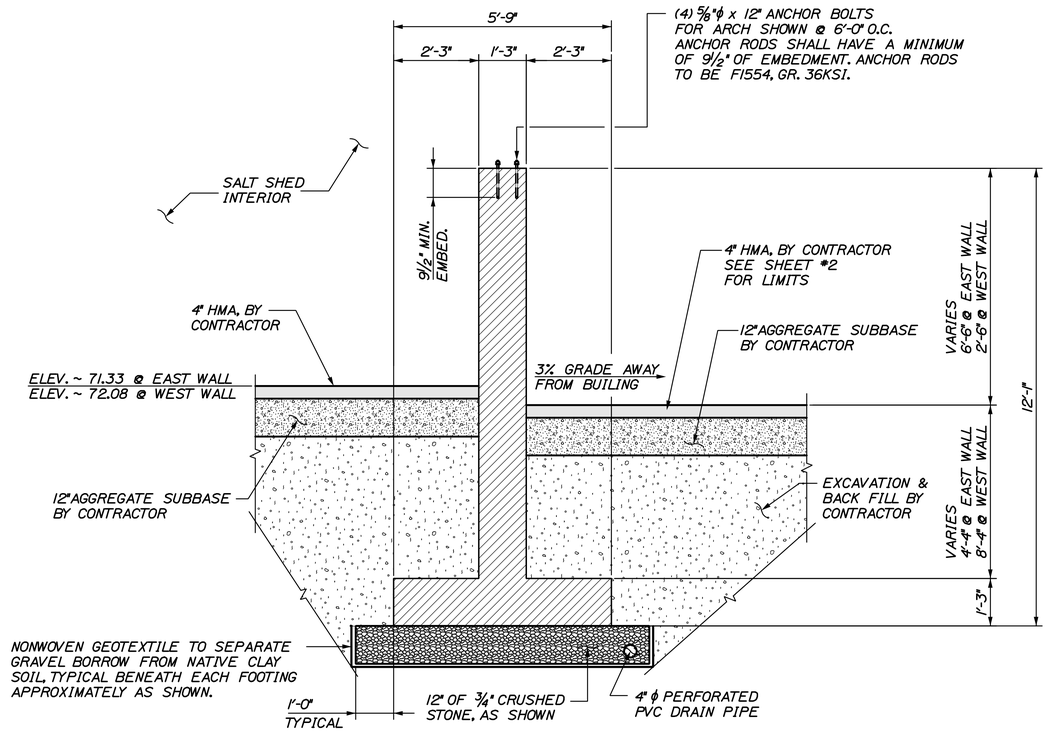

B/5 SIDEWALL SECTION
SCALE: ½"=1'-0"

CALDERWOOD ENGINEERING, ETC.
STRUCTURAL ENGINEERING • DETAILING SERVICES
222 RIVER RD, RICHMOND, ME 04357 PH/FX (207)737-2007/(207) 737-2008

PREPARED FOR:
STATE OF MAINE DOT
BANGOR, MAINE SALT SHED
CEE 042-ST-11

STATE OF MAINE
ERIC A. CALDERWOOD
No. 9099
LICENSED
PROFESSIONAL ENGINEER

P.E. NUMBER 9099
DATE JUNE 2011

DESIGN-DETAILED	OGK	BY	JJH	DATE	JUNE 2011
CHECKED-REVIEWED			ETC		
REVISIONS 1					
REVISIONS 2					
REVISIONS 3					
REVISIONS 4					
FIELD CHANGES					

BANGOR MAINTANANCE SALT SHED

NORTH & SOUTH SIDEWALL DIMENSIONAL DETAILS

SHEET NUMBER
5

Filename: ...\005_Sidewall_Dtls.dgn Workgroup: Structures Division Username: common Date:6/21/2011

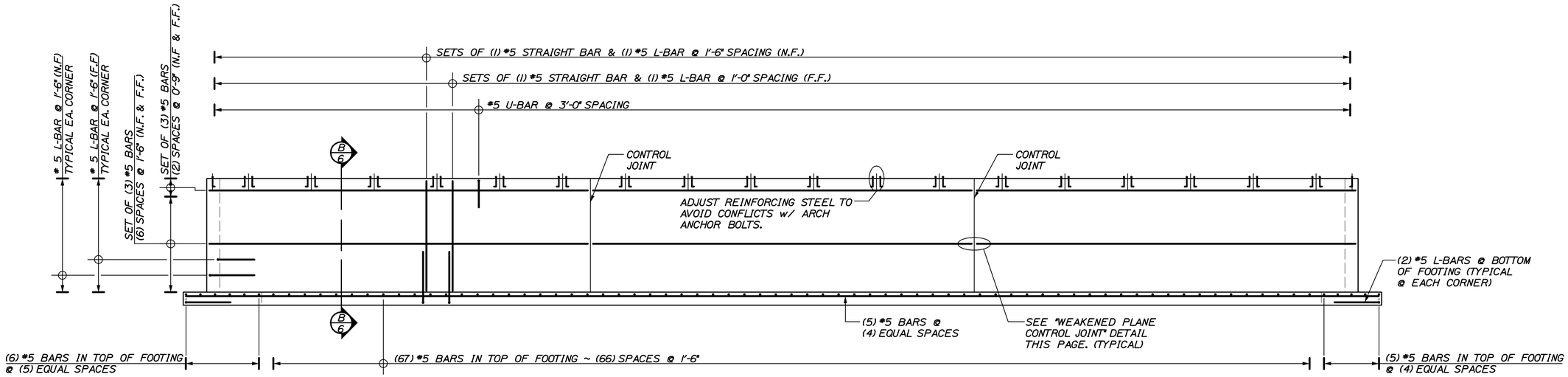

A/6 SIDEWALL REINFORCING

SCALE: 3/16" = 1'-0"
TYPICAL FOR NORTH AND SOUTH SIDEWALLS
ARCHES NOT SHOWN

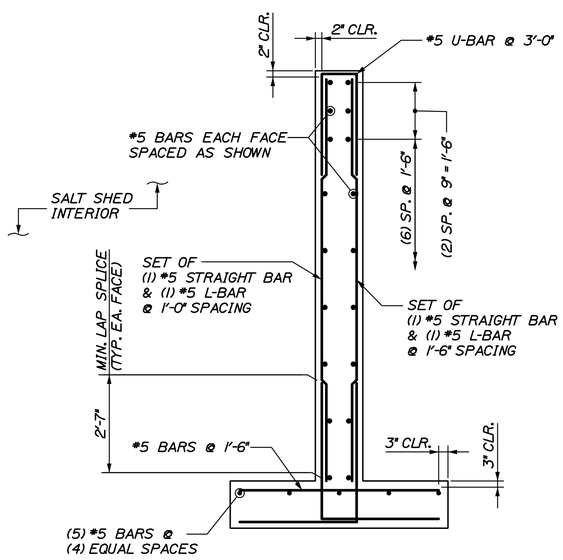

B/6 SIDEWALL REINFORCING SECTION

SCALE: 1/2" = 1'-0"

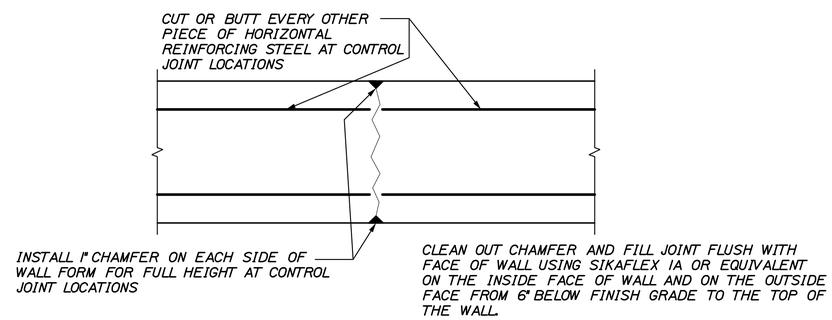

WEAKENED PLANE CONTROL JOINT

SCALE: 1 1/2" = 1'-0"

CALDERWOOD ENGINEERING, ETC.
STRUCTURAL ENGINEERING • DETAILING SERVICES
222 RIVER RD, RICHMOND, ME 04357 PH/FX (207)737-2007/(207) 737-2008

PREPARED FOR:
STATE OF MAINE DOT
BANGOR, MAINE SALT SHED
CEE 042-ST-11

STATE OF MAINE ERIC CALDERWOOD No. 9099 LICENSED PROFESSIONAL ENGINEER

P.E. NUMBER 9099
DATE JUNE 2011

	BY	DATE
DESIGN-DETAILED	OGK	JUNE 2011
CHECKED-REVIEWED	JJH	
	ETC	
REVISIONS 1		
REVISIONS 2		
REVISIONS 3		
REVISIONS 4		
FIELD CHANGES		

BANGOR MAINTANANCE SALT SHED

NORTH & SOUTH SIDEWALL REINFORCING DETAILS

SHEET NUMBER
6

Filename: ...\006_Sidewall_Reinforce.dwg Workgroup: Structures Division Username: common Date:6/21/2011

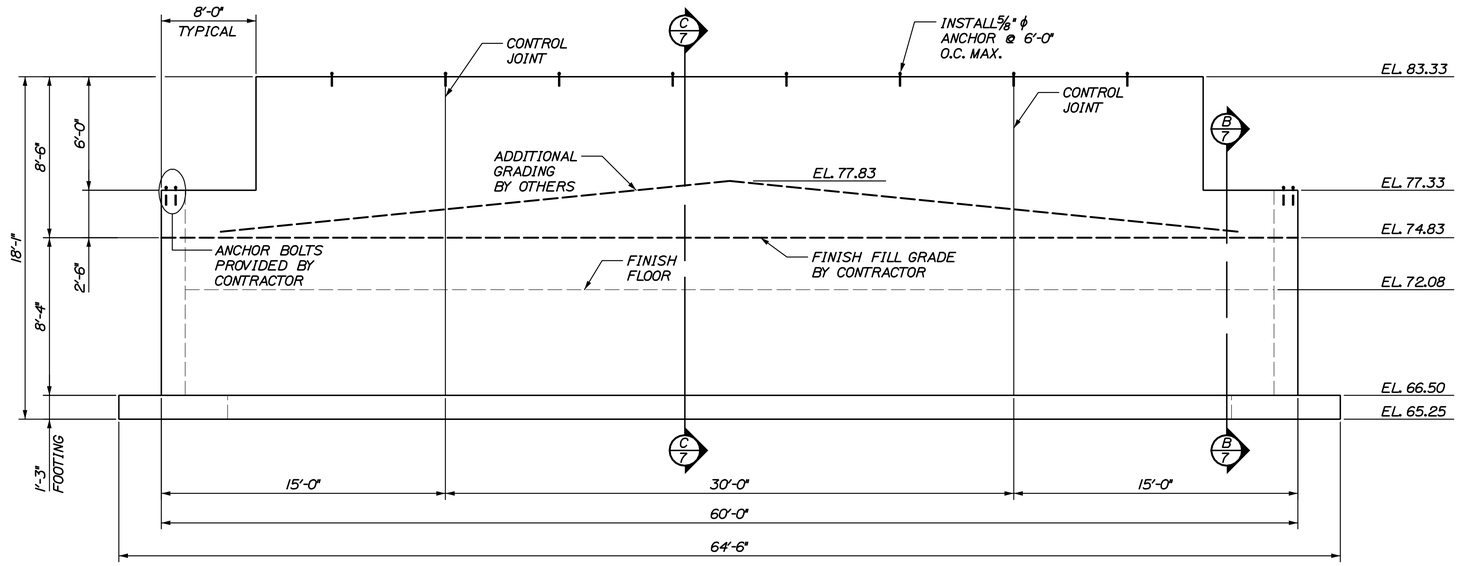

A/7 WEST END WALL ELEVATION
SCALE: 1/4" = 1'-0"

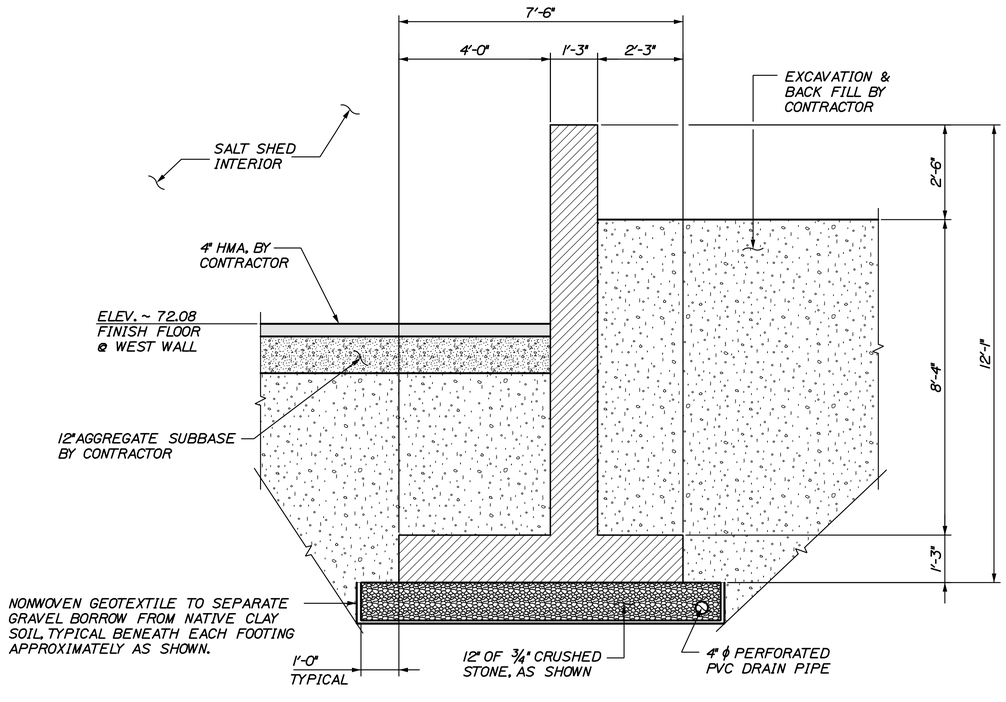

B/7 WEST END WALL SECTION
SCALE: 1/2"=1'-0"

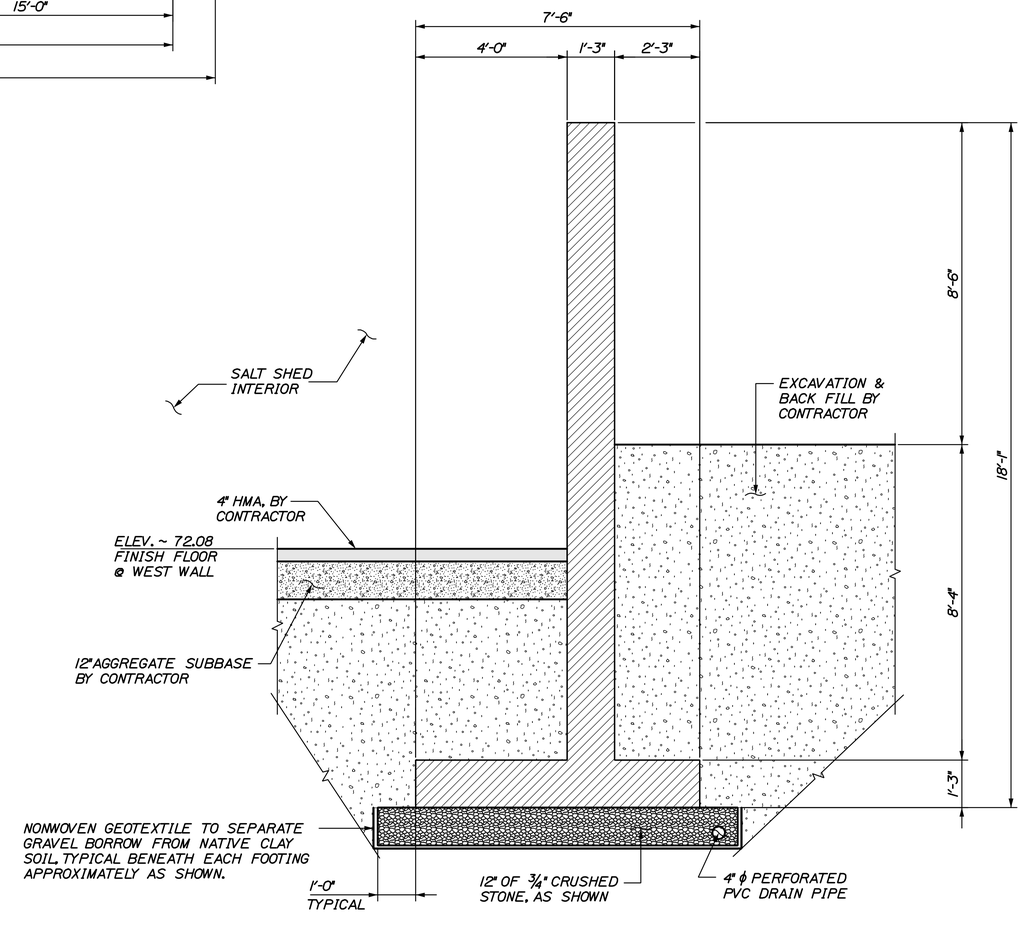

C/7 WEST END WALL SECTION
SCALE: 1/2"=1'-0"

CALDERWOOD ENGINEERING, ETC.
STRUCTURAL ENGINEERING • DETAILING SERVICES
222 RIVER RD, RICHMOND, ME 04357 PH/FX (207)737-2007/(207) 737-2008

PREPARED FOR:
STATE OF MAINE DOT
BANGOR, MAINE SALT SHED
CEE 042-ST-11

STATE OF MAINE
ERIC J. CALDERWOOD
No. 9099
LICENSED
PROFESSIONAL ENGINEER

9099
P.E. NUMBER
DATE JUNE 2011

	BY	DATE
DESIGN-DETAILED	OGK	JUNE 2011
CHECKED-REVIEWED	JJH	
	ETC	
REVISIONS 1		
REVISIONS 2		
REVISIONS 3		
REVISIONS 4		
FIELD CHANGES		

BANGOR MAINTANANCE SALT SHED

WEST END WALL DIMENSIONAL DETAILS

SHEET NUMBER
7

Filename: ...\007_WestWall_Dtls.dgn Workgroup: Structures Division Username: common Date:6/21/2011

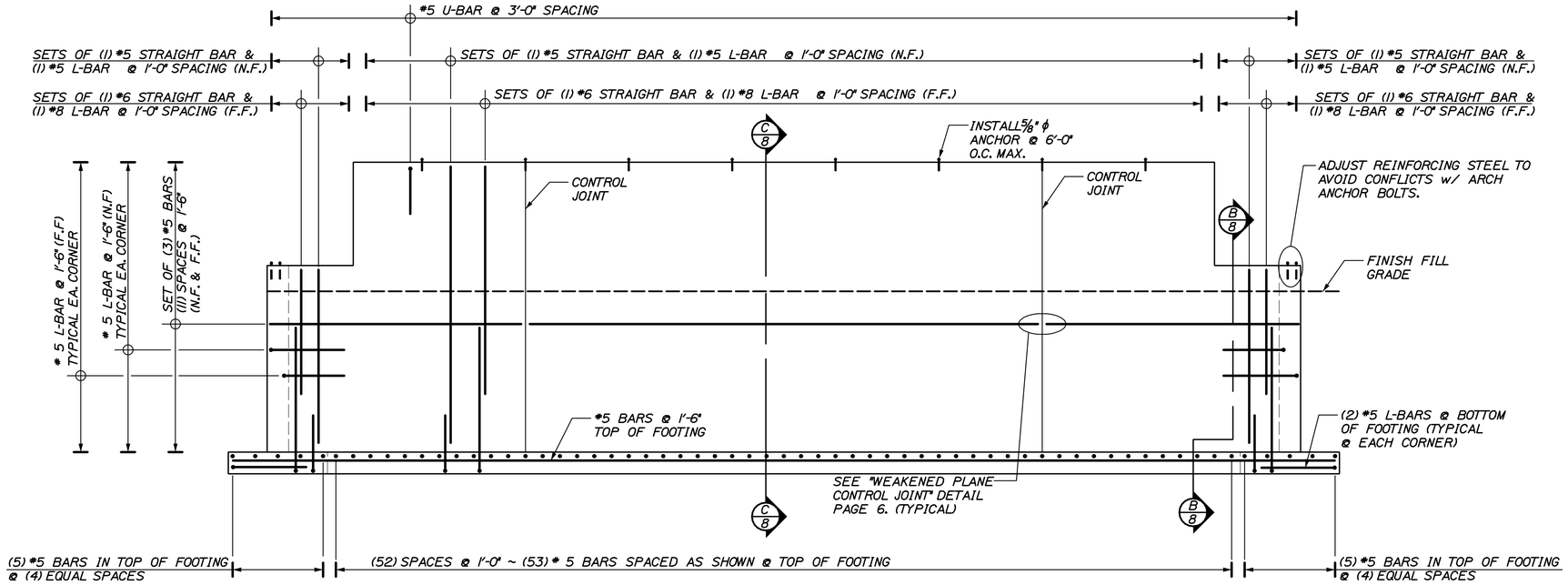

A/8 WEST END WALL REINFORCING
SCALE: 1/4" = 1'-0"

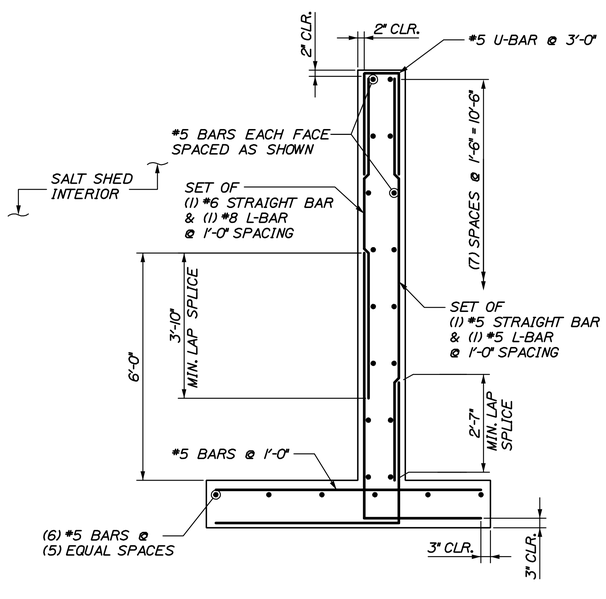

B/8 EAST END WALL REINFORCING SECTION
SCALE: 1/2" = 1'-0"

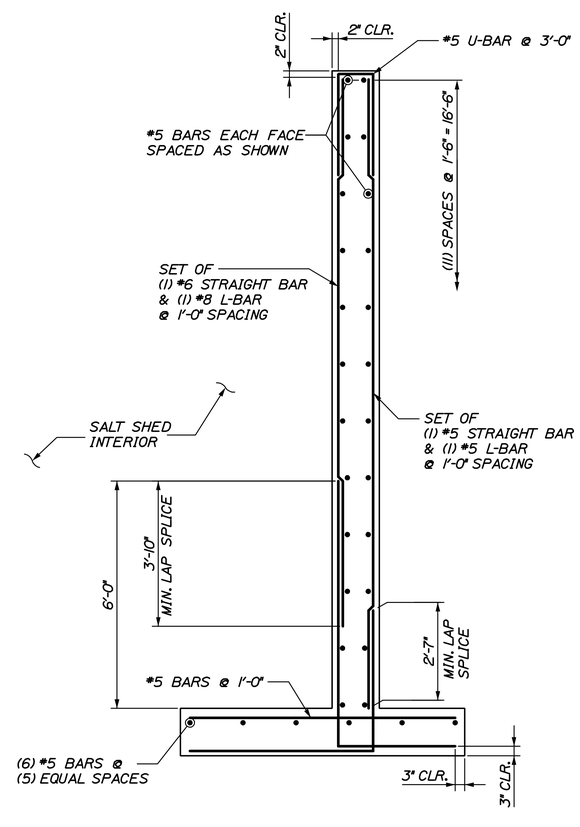

C/8 WEST END WALL REINFORCING SECTION
SCALE: 1/2" = 1'-0"

CALDERWOOD ENGINEERING, ETC.
STRUCTURAL ENGINEERING • DETAILING SERVICES
222 RIVER RD, RICHMOND, ME 04357 PH/FX (207) 737-2007/(207) 737-2008

PREPARED FOR:
STATE OF MAINE DOT
BANGOR, MAINE SALT SHED
CEE 042-ST-11

STATE OF MAINE ERIC CALDERWOOD No. 9099 LICENSED PROFESSIONAL ENGINEER

P.E. NUMBER 9099
DATE JUNE 2011

	BY	DATE
DESIGN-DETAILED	OGK	JUNE 2011
CHECKED-REVIEWED	JJH	
	ETC	
REVISIONS 1		
REVISIONS 2		
REVISIONS 3		
REVISIONS 4		
FIELD CHANGES		

BANGOR MAINTANANCE SALT SHED

WEST END WALL REINFORCING DETAILS

SHEET NUMBER
8

Filename: ...\008_WestWall_Reinforce.dwg Workgroup: Structures Division Username: common Date:6/21/2011

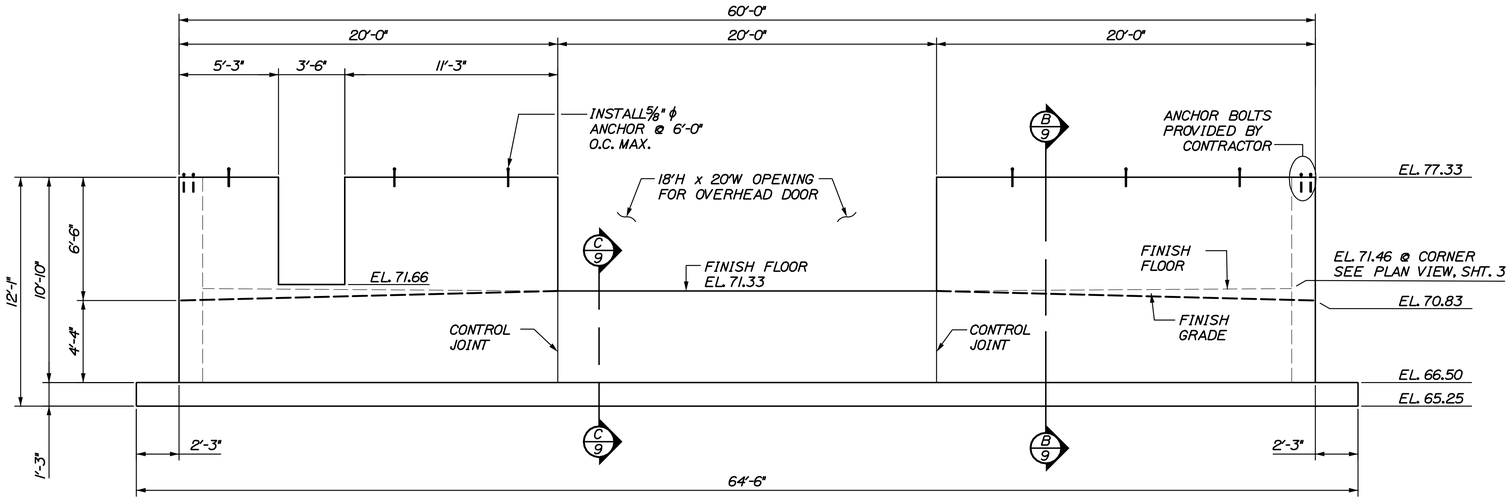

A 9 EAST END WALL ELEVATION
SCALE: 1/4" = 1'-0"

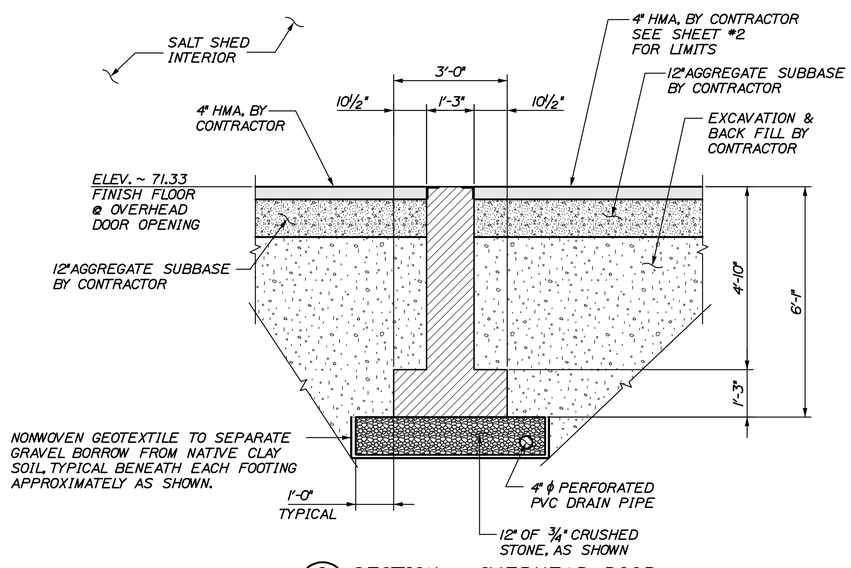

C 9 SECTION @ OVERHEAD DOOR
SCALE: 1/2"=1'-0"

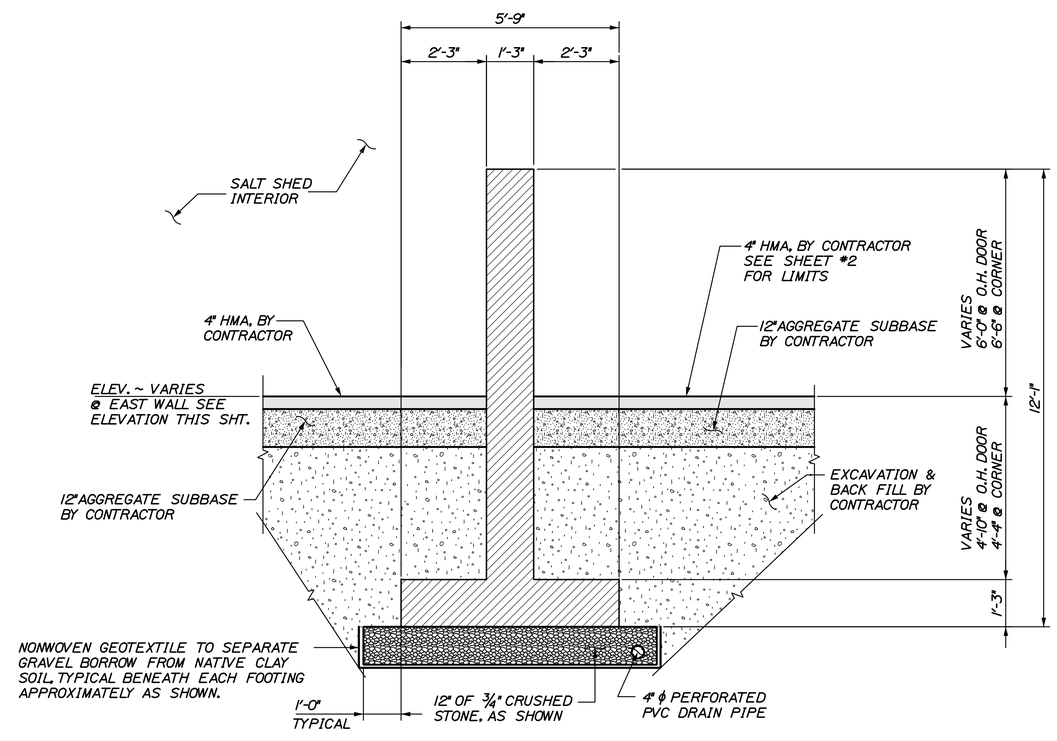

B 9 EAST END WALL SECTION
SCALE: 1/2"=1'-0"

CALDERWOOD ENGINEERING, ETC.
STRUCTURAL ENGINEERING • DETAILING SERVICES
222 RIVER RD, RICHMOND, ME 04357 PH/FX (207)737-2007/(207) 737-2008

PREPARED FOR:
STATE OF MAINE DOT

BANGOR, MAINE SALT SHED
CEE 042-ST-11

STATE OF MAINE ERIC CALDERWOOD No. 9099 LICENSED PROFESSIONAL ENGINEER

P.E. NUMBER 9099

DATE JUNE 2011

	BY	DATE
DESIGN-DETAILED	OGK	JUN
CHECKED-REVIEWED		ETC
REVISIONS 1		
REVISIONS 2		
REVISIONS 3		
REVISIONS 4		
FIELD CHANGES		

BANGOR MAINTANANCE SALT SHED

EAST END WALL DIMENSIONAL DETAILS

SHEET NUMBER
9

Filename: ...\009_EastWall_Dtls.dgn Workgroup: Structures Division Username: common Date:6/21/2011

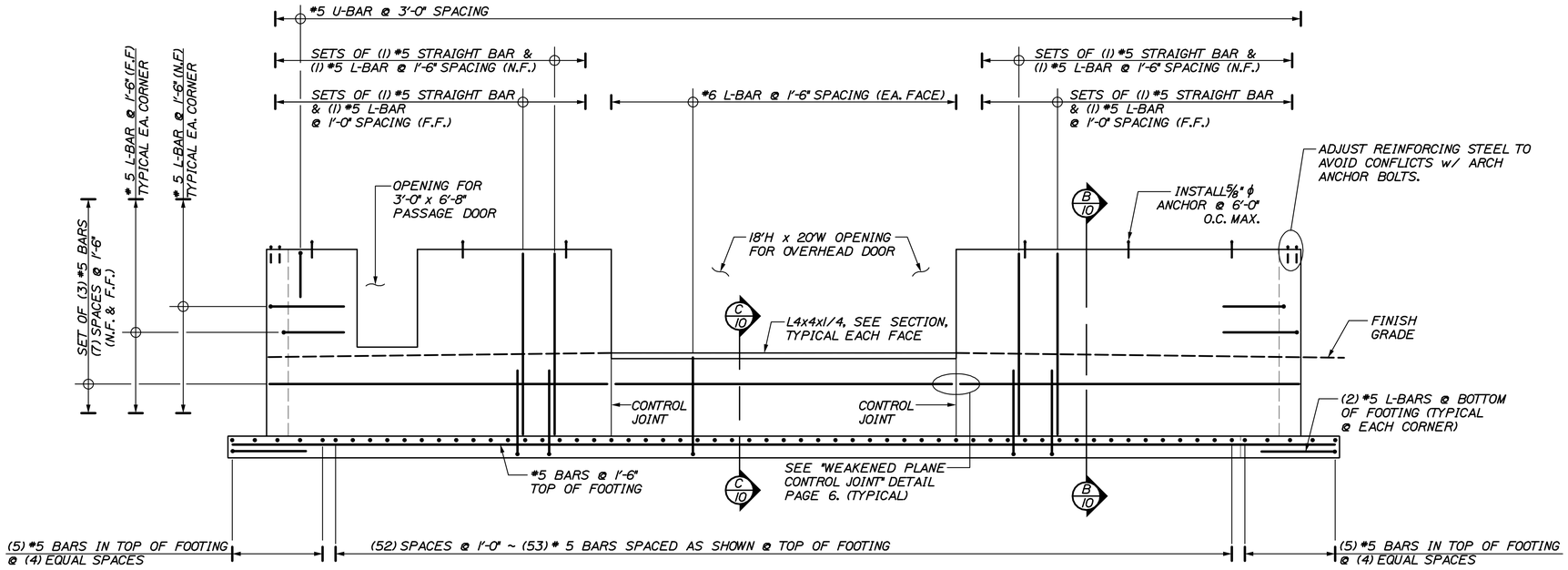

NOTE: CUT REINFORCING STEEL AS NECESSARY AT DOOR OPENINGS

A/10 EAST END WALL REINFORCING
SCALE: 1/4" = 1'-0"

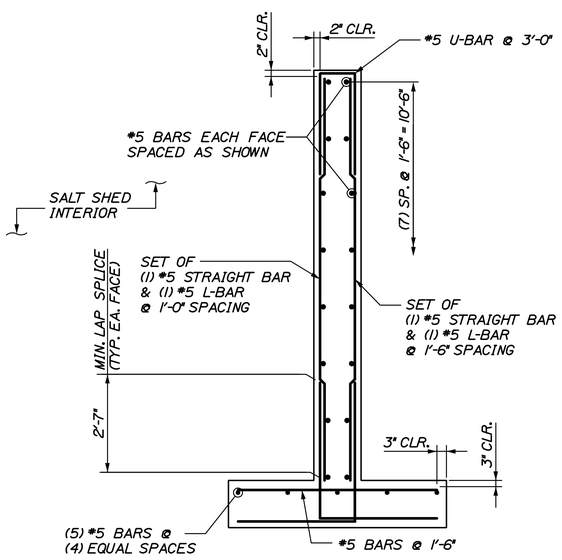

B/10 EAST END WALL REINFORCING SECTION
SCALE: 1/2"=1'-0"

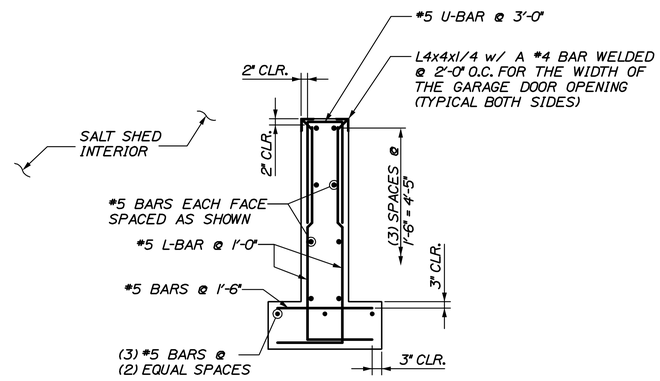

C/10 REINFORCING SECTION @ OVERHEAD DOOR
SCALE: 1/2"=1'-0"

CALDERWOOD ENGINEERING, ETC.
STRUCTURAL ENGINEERING • DETAILING SERVICES
222 RIVER RD, RICHMOND, ME 04357 PH/FX (207)737-2007/(207) 737-2008

PREPARED FOR:
STATE OF MAINE DOT
BANGOR, MAINE SALT SHED
CEE 042-ST-11

STATE OF MAINE ERIC J. CALDERWOOD No. 9099 LICENSED PROFESSIONAL ENGINEER

P.E. NUMBER 9099
DATE JUNE 2011

	BY	DATE
DESIGN-DETAILED	OGK	JUN 2011
CHECKED-REVIEWED	JJH	
	ETC	
REVISIONS 1		
REVISIONS 2		
REVISIONS 3		
REVISIONS 4		
FIELD CHANGES		

BANGOR MAINTANANCE SALT SHED

EAST END WALL REINFORCING DETAILS

SHEET NUMBER
10

Filename: ...\010_EastWall_Reinforce.dwg Workgroup: Structures Division Username: common Date:6/21/2011

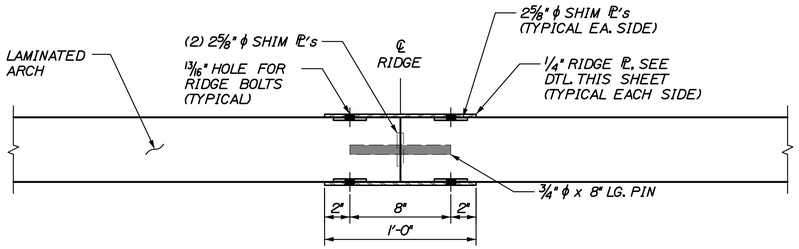

PLAN VIEW

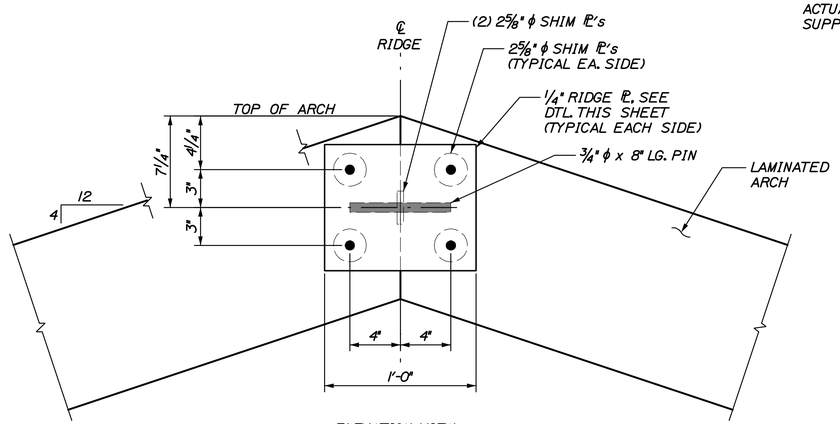

ELEVATION VIEW

RIDGE CONNECTION
SCALE: 2" = 1'-0"

NOTE:
DEPENDING ON SIZE AND TYPE OF ARCH SELECTED, LOCATION OF CONNECTION BOLTS AND AND PINS AT THE RIDGE MAY CHANGE.
ACTUAL RIDGE CONNECTION TO BE DESIGNED AND SUPPLIED BY ARCH MANUFACTURER.

METAL ROOFING NOTES

1. THE SALT SHED IS TO BE ROOFED WITH THE EVERLAST DL-150 PRODUCT, OR AN EQUIVALENT PRODUCT. THIS PRODUCT USES DOUBLE-LOCK STANDING SEAM ROOF PANELS.

2. THE FINISH IS TO BE BARE GALVALUME.

3. THE PANELS ARE TO BE DELIVERED TO THE JOB SITE BY THE SUPPLIER IN STRAIGHT, UNFORMED PANELS. THE SUPPLIER WILL THEN FORM THE PANELS ON SITE TO THE SHAPE AND RADIUS OF THE ROOF. THE CONTRACTOR MAY BE REQUIRED TO PROVIDE ADDITIONAL MAN-POWER TO THE SUPPLIER TO AID IN MOVING THE PANELS.

4. NO BUTT SEAMS WILL BE ALLOWED ON THE ROOF. THE PANELS WILL BE FORMED FROM 1 PIECE THAT BEGINS AT THE BOTTOM OF THE ROOF AND CONTINUES ALL THE WAY TO THE RIDGE.

5. NO EXPOSED FASTENERS WILL BE ALLOWED ON THE ROOF PANELS.

6. PANELS MUST BE INSTALLED IN A SEQUENTIAL PATTERN.

7. A 30# ROOFING FELT OR AN APPROVED EQUAL SHOULD BE INSTALLED OVER SUBSTRATE PRIOR TO INSTALLATION OF PANELS.

8. PANELS MUST BE LOCKED IN THE FIELD BY A MECHANICAL SEAMER.

9. IF PANELS REQUIRE STORAGE BEFORE BEING INSTALLED, THEY SHOULD BE STORED IN A WELL-VENTILATED, DRY PLACE WHERE NO MOISTURE CAN COME IN CONTACT WITH THEM. IF STORED OUTSIDE, COVER WITH VENTED TARP OR WATERPROOF PAPER COVER (NOT PLASTIC). KEEP MATERIAL OFF THE GROUND.

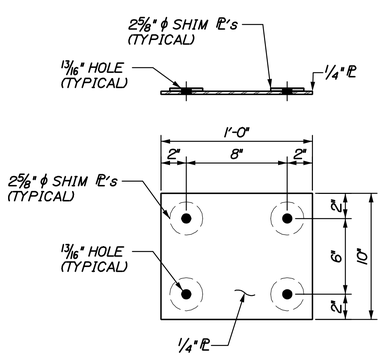

RIDGE CONNECTION PL
SCALE: 2" = 1'-0"

NOTE:
RIDGE CONNECTION PL SHOWN IS AN EXAMPLE. COORDINATE WITH ARCH MANUFACTURER FOR ACTUAL PLATE TO BE USED.

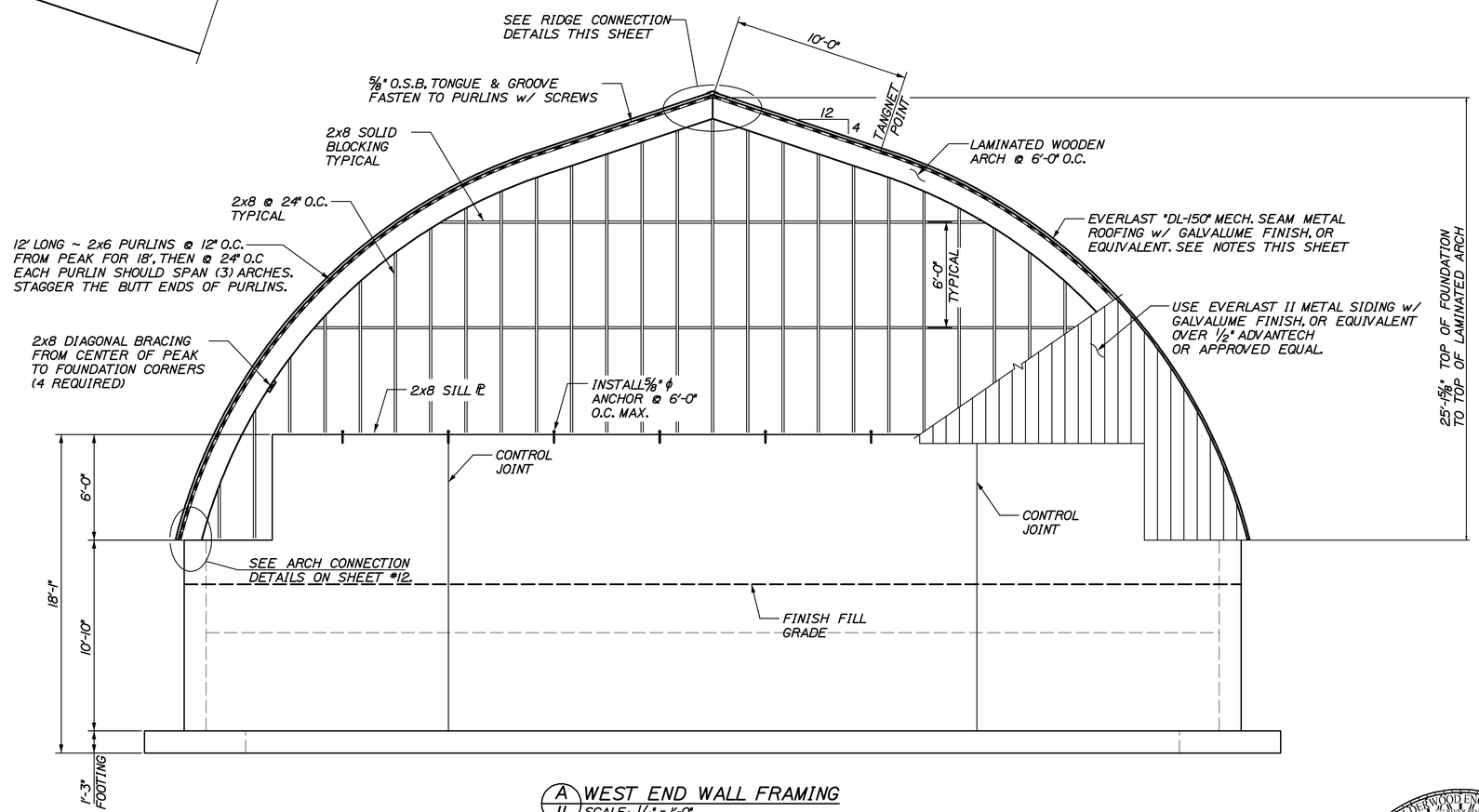

A/11 WEST END WALL FRAMING
SCALE: 1/4" = 1'-0"

CALDERWOOD ENGINEERING, ETC.
STRUCTURAL ENGINEERING • DETAILING SERVICES
222 RIVER RD, RICHMOND, ME 04357 PH/FX (207)737-2007/(207) 737-2008

PREPARED FOR:
STATE OF MAINE DOT
BANGOR, MAINE SALT SHED
CEE 042-ST-11

STATE OF MAINE ERIC J. CALDERWOOD No. 9099 LICENSED PROFESSIONAL ENGINEER

P.E. NUMBER 9099
DATE JUNE 2011

	BY	DATE
DESIGN-DETAILED	OGK	JUNE 2011
CHECKED-REVIEWED	JJH	
	ETC	
REVISIONS 1		
REVISIONS 2		
REVISIONS 3		
REVISIONS 4		
FIELD CHANGES		

BANGOR MAINTANANCE SALT SHED

WEST END WALL FRAMING LAMINATED ARCH DETAILS

SHEET NUMBER
11

Filename: ...\011_WestWall_Arch.dgn Workgroup: Structures Division Username: common Date:6/21/2011

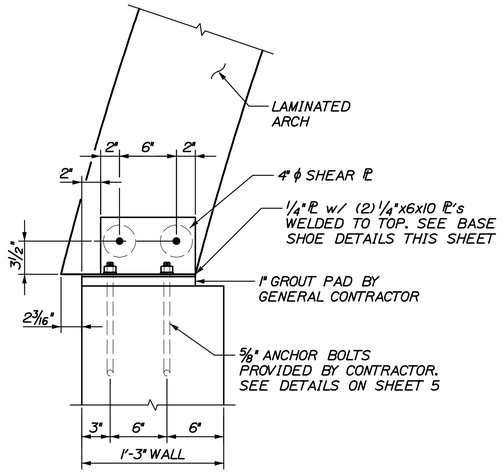

TYPICAL ARCH TO FOUNDATION CONNECTION

SCALE: 1 1/2" = 1'-0"

NOTE:
DEPENDING ON SIZE AND TYPE OF ARCH SELECTED, ANCHOR BOLT LAYOUT MAY CHANGE.
ACTUAL ANCHOR BOLT LAYOUT TO BE COORDINATED WITH THE LAMINATED ARCH MANUFACTURER.
GENERAL CONTRACTOR IS RESPONSIBLE FOR CHECKING LAYOUT OF ANCHOR BOLTS WITH ARCH BASE PLATES TO ENSURE A PROPER FIT.
BASE SHOES, SHEAR PL's, AND ARCH BOLTS TO BE DESIGNED AND SUPPLIED BY ARCH MANUFACTURER.

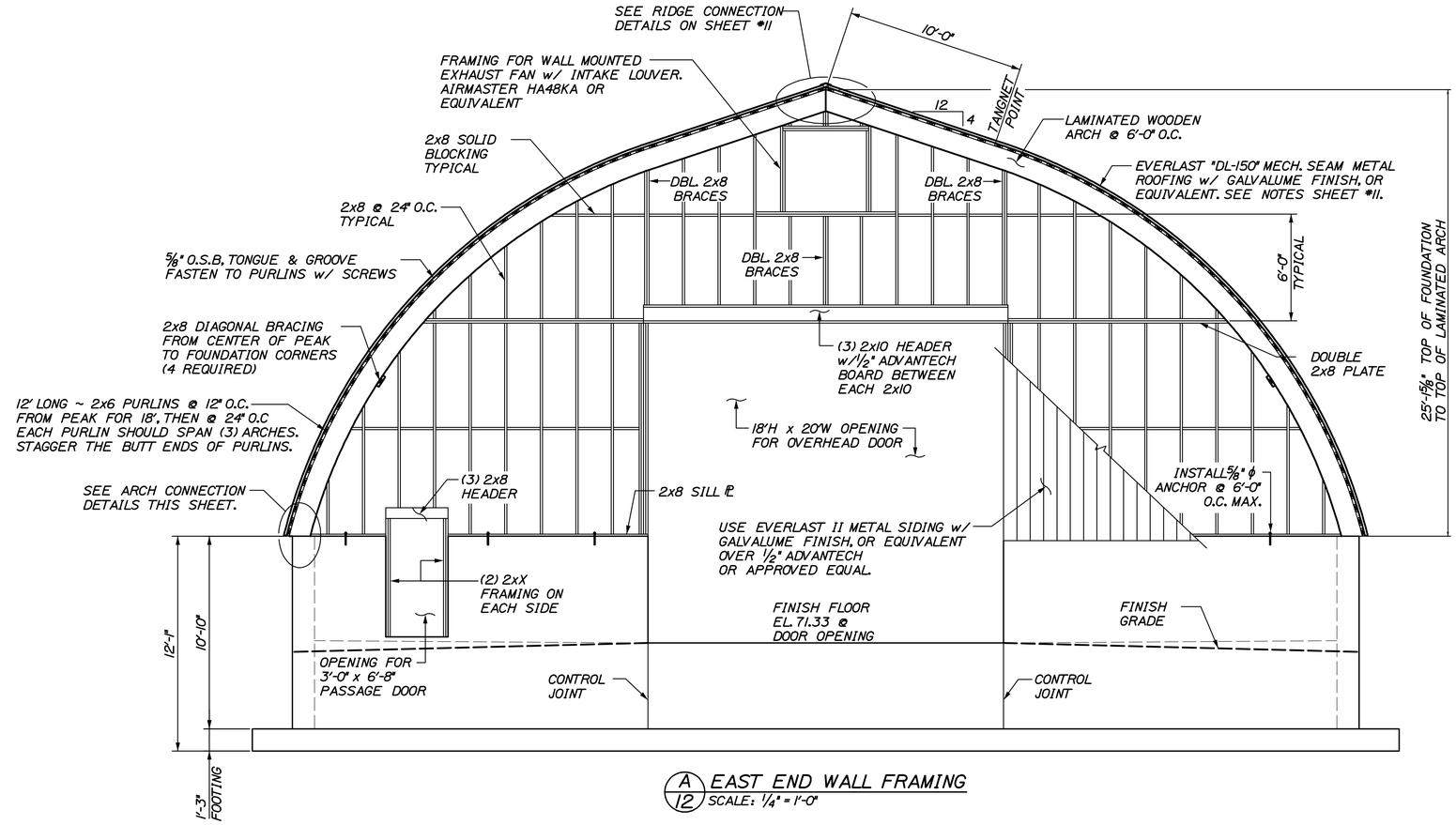

A/12 EAST END WALL FRAMING

SCALE: 1/4" = 1'-0"

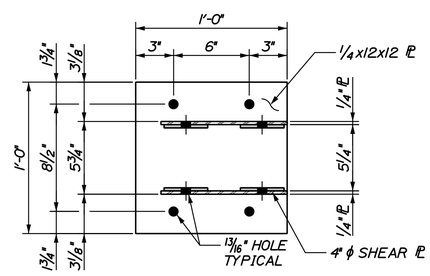

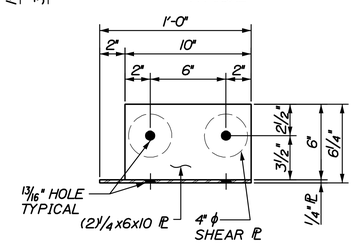

TYPICAL BASE SHOE (EXAMPLE ONLY)

SCALE: 2" = 1'-0"

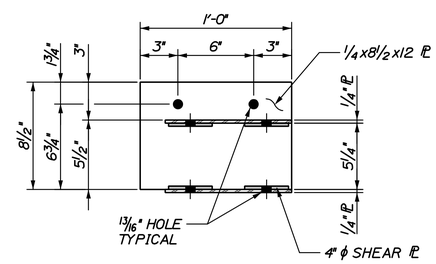

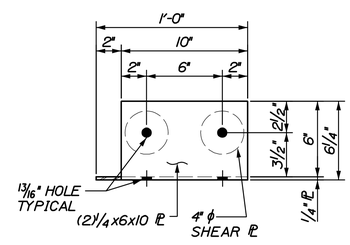

CORNER BASE SHOE (EXAMPLE ONLY)

SCALE: 2" = 1'-0"

NOTE:
BASE SHOES SHOWN ARE EXAMPLES. COORDINATE WITH ARCH MANUFACTURER FOR ACTUAL SHOES TO BE USED.

CALDERWOOD ENGINEERING, ETC.
STRUCTURAL ENGINEERING • DETAILING SERVICES
222 RIVER RD, RICHMOND, ME 04357 PH/FX (207)737-2007/(207) 737-2008

PREPARED FOR:
STATE OF MAINE DOT
BANGOR, MAINE SALT SHED
CEE 042-ST-11

STATE OF MAINE ERIC J. CALDERWOOD No. 9099 LICENSED PROFESSIONAL ENGINEER

P.E. NUMBER 9099

DATE JUNE 2011

	BY	DATE
DESIGN-DETAILED	GSK	JJH	JUNE 2011
CHECKED-REVIEWED		ETC	
REVISIONS 1			
REVISIONS 2			
REVISIONS 3			
REVISIONS 4			
FIELD CHANGES			

BANGOR MAINTANANCE SALT SHED

EAST END WALL FRAMING LAMINATED ARCH DETAILS

SHEET NUMBER

12

Filename: ...\012_EastWall_Arch.dgn Workgroup: Structures Division Username: common Date:6/21/2011

ELECTRICAL LEGEND	
A	H.E. WILLIAMS, 5" DEEP, FULLY ENCLOSED INDUSTRIAL LIGHT FIXTURE, MODEL #92-8-454T5H-A-EB2/2-SSLATCH-SSMB w/ ATTACHED HUBBELL FIXTURE MOUNTED OCCUPANCY SENSORS
B	250W METAL HALLIDE FLOOD LIGHT EQUIV. TO LUMARK NIGHTHAWK III W/ PHOTOCELL AND SWITCH.
S	WEATHERPROOF SWITCH
WP	GFCI RECEPTACLE W/ WEATHERPROOF COVER
M	OVERHEAD DOOR OPERATOR

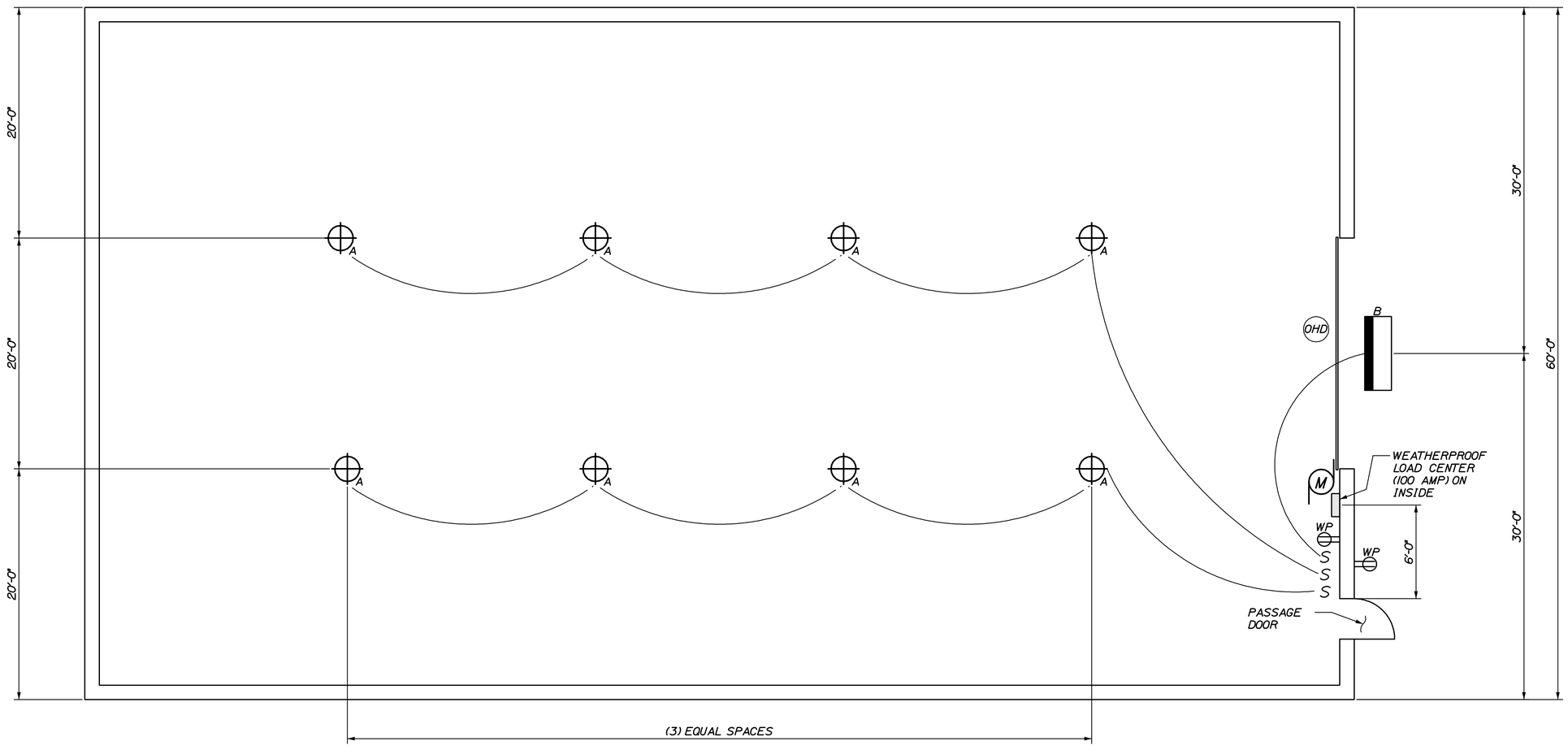

A/15 ELECTRICAL FLOOR PLAN
3/16"=1'-0"

Filename: ...\013_Electrical_Plan.dgn Workgroup: Structures Division Username: common Date:6/21/2011

CALDERWOOD ENGINEERING, ETC.
STRUCTURAL ENGINEERING • DETAILING SERVICES
222 RIVER RD, RICHMOND, ME 04357 PH/FX (207)737-2007/(207) 737-2008
PREPARED FOR:
STATE OF MAINE DOT
BANGOR, MAINE SALT SHED
CEE 042-ST-11

STATE OF MAINE
ERIC J. CALDERWOOD
No. 9099
LICENSED
PROFESSIONAL ENGINEER

P.E. NUMBER 9099
DATE JUNE 2011

	BY	DATE
DESIGN-DETAILED	OGK	JUNE 2011
CHECKED-REVIEWED	JJH	
	ETC	
REVISIONS 1		
REVISIONS 2		
REVISIONS 3		
REVISIONS 4		
FIELD CHANGES		

BANGOR MAINTANANCE SALT SHED

ELECTRICAL FLOOR PLAN

SHEET NUMBER
13

CALDERWOOD ENGINEERING, ETC.
222 RIVER ROAD
RICHMOND, ME 04357
TEL (207) 737-2007 FAX (207) 737-2008