STATE OF MAINE
DEPARTMENT OF TRANSPORTATION

TRAFFIC DATA

Current (2010) AADT	4700
Future (2020) AADT	5170
DHV - % of AADT	10
Design Hour Volume	564
Heavy Trucks (% of AADT)	10
Heavy Trucks (% of DHV)	8
Directional Distribution (% of DHV)	60
18 kip Equivalent P 2.0	471
18 kip Equivalent P 2.5	449
Design Speed (mph)	55

HYDROLOGIC DATA

Drainage Area	12.0 sq mi
Design Discharge (Q50)	837.5 cfs
Check Discharge (Q100)	988.5 cfs
Headwater Elevation (Q50)	327.6 ft
Headwater Elevation (Q100)	328.8 ft
Discharge Velocity (Q50)	12.1 fps
Discharge Velocity (Q100)	12.2 fps
Headwater Elevation (Q1.1)	321.4 ft
Discharge Velocity (Q1.1)	7.8 fps

MATERIALS

Invert Lining	Shotcrete, Class "A" CIP concrete or composite
Fish Weirs:	
Internal	Shotcrete, Class "A" CIP concrete or composite
External	Class "A" CIP concrete or composite
Reinforcing Steel	ASTM A 615/A 615M, Grade 60

BASIC DESIGN STRESSES

Concrete:	
Class "A"	f 'c = 4350 psi
Shotcrete	f 'c = 5000 psi
Reinforcing Steel	f y = 60,000 psi

UTILITIES

Central Maine Power Company
Northern New England Telephone Operations LLC
Time Warner Cable

MAINTENANCE OF TRAFFIC

Maintain two 11'-0" wide lanes of two - way traffic with occasional alternating two - way traffic using flaggers when a lane closure is necessary.

CORNISH / LIMINGTON
YORK COUNTY
TANNERY BRIDGE
OVER
DOUGLAS BROOK
STATE ROUTES 25/117
STATE PROJECT NO. 017875.00

BRIDGE CULVERT REHABILITATION
BRIDGE NO. 3024

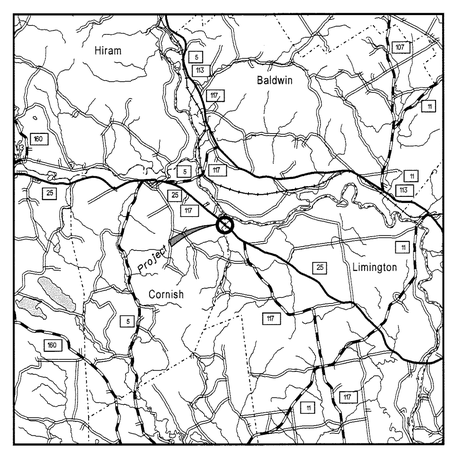

LOCATION MAP

2 0 2 4
Scale of Miles

LIST OF DRAWINGS

Title Sheet	1
Estimated Quantities & Notes	2
General Plan	3
Pipe Plan & Elevation	4
Pipe Details	5
Internal Weirs	6
External Weirs	7 - 8
Reinforcing Steel Schedule	9
Right of Way Map	10

PIN 17875.00

STATE OF MAINE
DEPARTMENT OF TRANSPORTATION
APPROVED
COMMISSIONER: DATE 5/17/11
CHIEF ENGINEER: 5-17-11

STATE OF MAINE Nathaniel D. Benoit 10651 LICENSED PROFESSIONAL ENGINEER

SIGNATURE
P.E. NUMBER 10651
DATE 5-16-11

PROJECT INFORMATION

PROGRAM	BRIDGE PROGRAM
PROJECT MANAGER	MARK PARLIN
DESIGNER	JOEL VEILLEUX
CONSULTANT	N/A
PROJECT RESIDENT	CRAIG HURD
CONTRACTOR	
PROJECT COMPLETION DATE	

CORNISH / LIMINGTON
TANNERY BRIDGE
TITLE SHEET

SHEET NUMBER
1
OF 10

Filename:\00\BRIDGE\MSTA\001_Title.dgn Division: BRIDGE Username: Joel.R.Veilleux Date:5/16/2011

ESTIMATED QUANTITIES

ITEM NO.	DESCRIPTION	QUANTITY	UNIT
502.325	STRUCTURAL CONCRETE CULVERT INVERT LINING (28 CY)	1	LS
502.326	STRUCTURAL CONCRETE - FISH WEIRS (12 CY)	1	LS
503.12	REINFORCING STEEL, FABRICATED AND DELIVERED	5000	LB
503.13	REINFORCING STEEL, PLACING	5000	LB
511.07	COFFERDAM: UPSTREAM	1	LS
511.07	COFFERDAM: DOWNSTREAM	1	LS
610.08	PLAIN RIPRAP	40	CY
613.319	EROSION CONTROL BLANKET	10	SY
618.1411	SEEDING METHOD NUMBER 3 - PLAN QUANTITY	3	UN
619.1201	MULCH - PLAN QUANTITY	3	UN
619.1401	EROSION CONTROL MIX	10	CY
629.05	HAND LABOR, STRAIGHT TIME	20	HR
631.12	ALL PURPOSE EXCAVATOR (INCLUDING OPERATOR)	10	HR
631.172	TRUCK - LARGE (INCLUDING OPERATOR)	10	HR
639.19	FIELD OFFICE TYPE B	1	EA
652.33	DRUM	10	EA
652.34	CONE	20	EA
652.35	CONSTRUCTION SIGNS	100	SF
652.361	MAINTENANCE OF TRAFFIC CONTROL DEVICES (60 CD)	1	LS
652.38	FLAGGER	200	HR
656.75	TEMPORARY SOIL EROSION AND WATER POLLUTION CONTROL	1	LS
659.10	MOBILIZATION	1	LS

GENERAL CONSTRUCTION NOTES

1. For easements, construction limits and right of way lines, refer to Right of Way Map.

2. The clearing limits will be established in the field by the Resident. Payment for clearing will be considered incidental to Contract items.

3. All work shall be done in accordance with the latest revision of the Maine Department of Transportation's Best Management Practices for Erosion and Sediment Control.

4. Project information referred to below may be accessed at the following MaineDOT web address: http://www.maine.gov/mdot/comprehensive-list-projects/project-information.php.

5. The existing bridge plans may be accessed at the MaineDOT web address. The plans are reproductions of the original drawings as prepared for the construction of the bridge. It is very unlikely that the plans will show any construction field changes or any alterations which may have been made to the bridge during its life span.

6. The hydrologic report of the bridge site may be accessed at the MaineDOT web address. The hydrologic report is based on MaineDOT's interpretation of the information obtained for the subject site. No assurance is given that the information or the conclusions of the report will be representative of actual conditions at the time of construction.

7. Quantities included for pay items measured and paid for by Lump Sum are estimated quantities and are provided by MaineDOT for informational purposes only. Lump Sum pay items will be paid for at the Contract Bid amount, with no addition or reduction in payment to the Contractor if the actual final quantities are different from the MaineDOT provided estimated quantities, except as follows:

   a. If a Lump Sum pay item is eliminated, the requirements of Standard Specifications Section 109.2, Elimination of Items, will take precedence.

   b. If other Contract Documents specifically allow a change in payment for a Lump Sum pay item, those requirements will be followed.

   c. If a design change results in changes to estimated quantities for Lump Sum pay items, price adjustments will be made in accordance with Standard Specifications Section 109.7, Equitable Adjustments to Compensation.

8. Any excavation and backfill required to construct the external weirs shall be considered incidental to pay item 502.326 Structural Concrete - Fish Weirs in accordance with Standard Specifications Section 206 - Structural Excavation for minor structures.

9. Any of material excavated while constructiong the riprap aprons and external weirs shall remain on site and be reused, as directed by the Resident, to fill and feather into nearby slopes. This work wil be considered incidental to related Contract items.

STATE OF MAINE
DEPARTMENT OF TRANSPORTATION

STATE PROJECT No. 017875.00

PIN 17875.00

BRIDGE NO. 3024

BRIDGE PLANS

PROJ. MANAGER	M. Pearlin	BY	DATE
DESIGN-DETAILED	J. Velleux	D. Damren	5/2011
CHECKED-REVIEWED	MAP		3/2011
DESIGN2-DETAILED2			
DESIGN3-DETAILED3			
REVISIONS 1			
REVISIONS 2			
REVISIONS 3			
REVISIONS 4			
FIELD CHANGES			

SIGNATURE

P.E. NUMBER

DATE

TANNERY BRIDGE
DOUGLAS BROOK
CORNISH \ LIMINGTON YORK COUNTY

ESTIMATED QUANTITIES & NOTES

SHEET NUMBER
2
OF 10

Filename: ...\BRIDGE\MSTA\002_Estimate.dgn Division: BRIDGE Username: Joel.R.Veilleux Date:5/17/2011

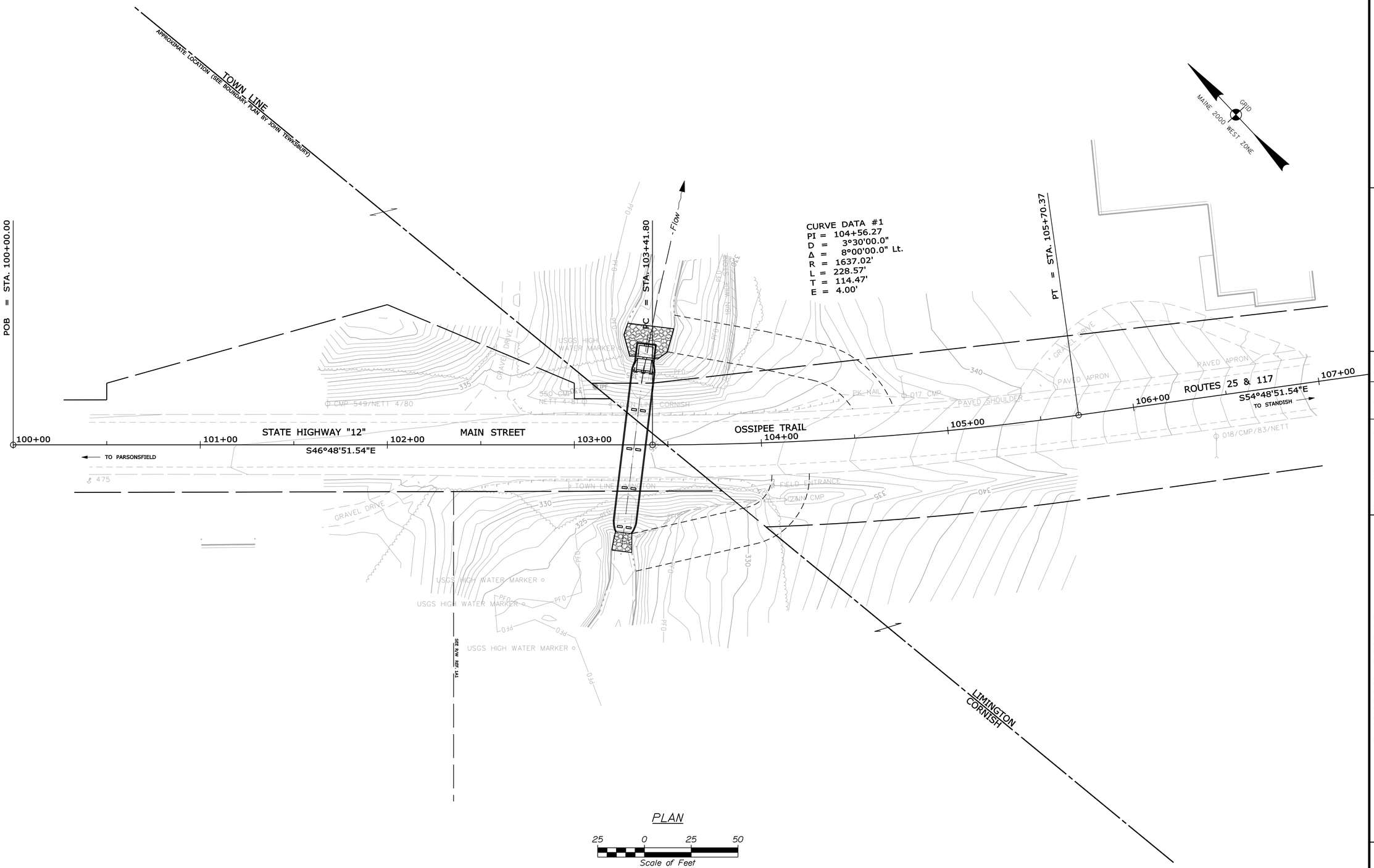

PLAN

25 0 25 50

Scale of Feet

STATE OF MAINE
DEPARTMENT OF TRANSPORTATION

STATE PROJECT No. 017875.00

PIN 17875.00

BRIDGE NO. 3024

BRIDGE PLANS

		BY	DATE
PROJ. MANAGER	M. Perkins		
DESIGN-DETAILED	J. Velleux	D. Domren	5/2011
CHECKED-REVIEWED	MAP		3/2011
DESIGN2-DETAILED2			
DESIGN3-DETAILED3			
REVISIONS 1			
REVISIONS 2			
REVISIONS 3			
REVISIONS 4			
FIELD CHANGES			

SIGNATURE

P.E. NUMBER

DATE

TANNERY BRIDGE
DOUGLAS BROOK
CORNISH \ LIMINGTON YORK COUNTY

GENERAL PLAN

SHEET NUMBER

3

OF 10

Filename: ...\msta\003_General Plan.dgn Division: BRIDGE Username: Joel.R.Veilleux Date:5/16/2011

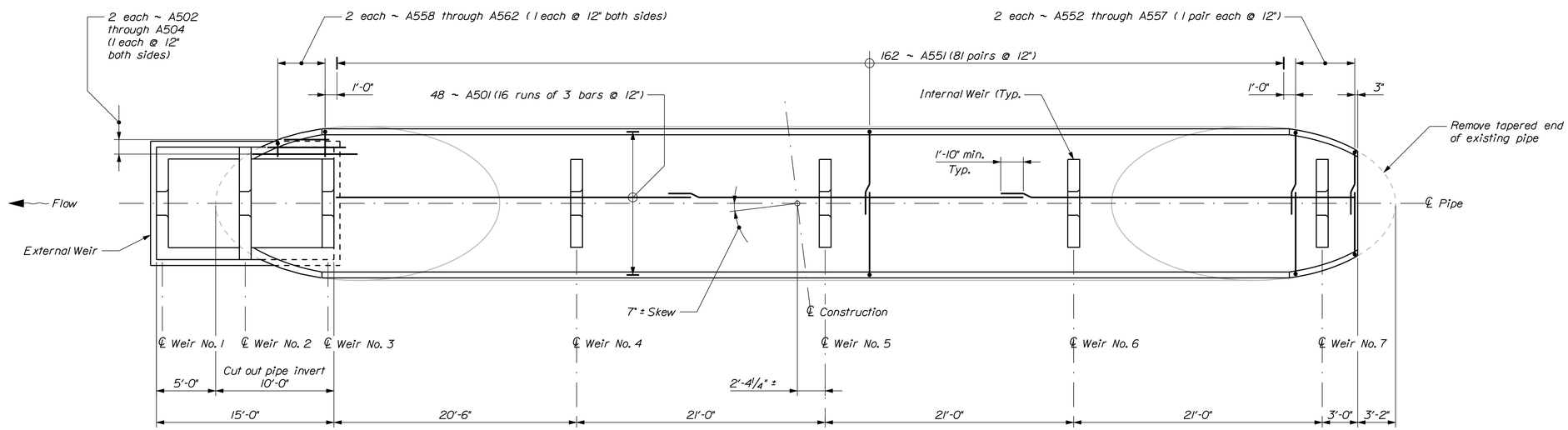

PIPE PLAN

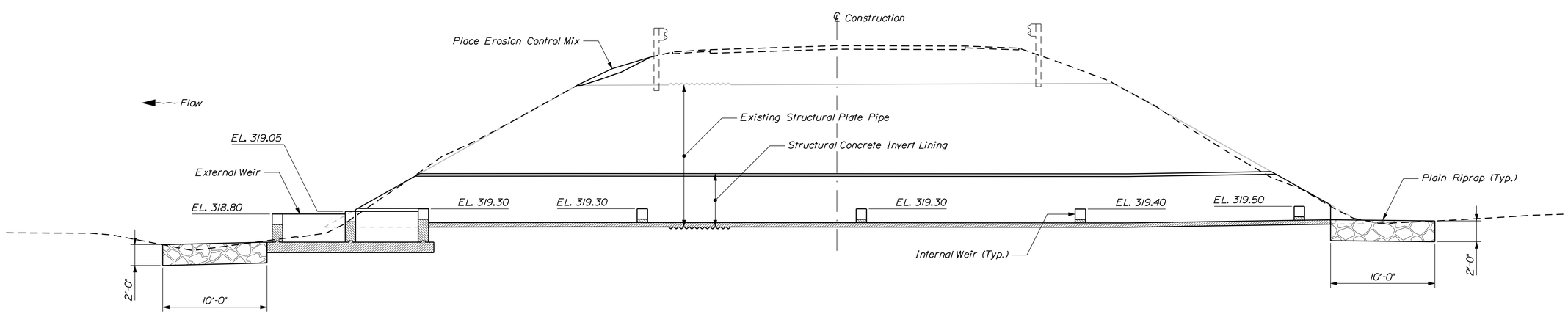

LONGITUDINAL PIPE SECTION

STATE OF MAINE
DEPARTMENT OF TRANSPORTATION

STATE PROJECT No. 017875.00

PIN 17875.00

BRIDGE NO. 3024

BRIDGE PLANS

PROJ. MANAGER	M. Parlin	BY	DATE
DESIGN-DETAILED	J. Velleux	D. Damren	5/2011
CHECKED-REVIEWED	MAP		3/2011
DESIGN2-DETAILED2			
DESIGN3-DETAILED3			
REVISIONS 1			
REVISIONS 2			
REVISIONS 3			
REVISIONS 4			
FIELD CHANGES			

SIGNATURE

P.E. NUMBER

DATE

TANNERY BRIDGE
DOUGLAS BROOK
CORNISH \ LIMINGTON YORK COUNTY

PIPE PLAN & ELEVATION

SHEET NUMBER

4

OF 10

Filename: ...\004_Pipe_Plan & Elevation.dgn Division: BRIDGE Username: Joel.R.Veilleux Date:5/16/2011

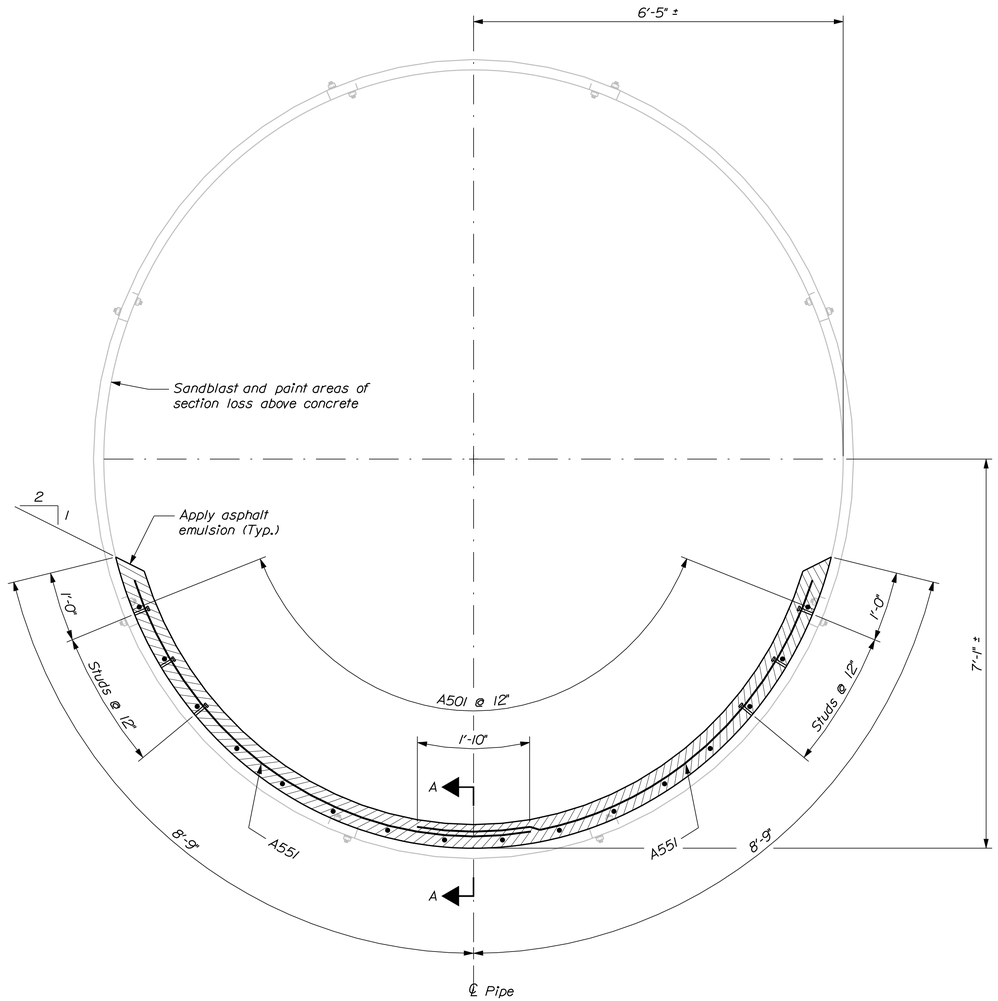

TRANSVERSE PIPE SECTION

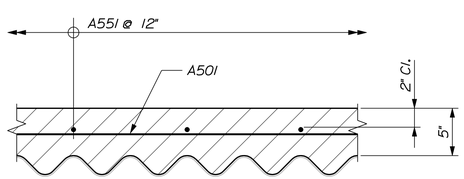

SECTION A - A

INVERT LINING NOTES

1. All debris in the existing pipe shall be removed and disposed of properly. Surfaces of the pipe against which concrete is to be placed shall be thoroughly cleaned so as to remove all loose corrosion. In areas where the metal is nonexistent, a preliminary concrete placement shall be made, using forms where required, to fill voids and to establish the original lines of the pipe. Payment for this work will be considered incidental to Item No. 502.325, Structural Concrete Invert Lining. The final concrete placement shall then be made as shown.

2. Three rows of shear connectors shall be staggered longitudially at 12-in. spacing along each side of the pipe barrel. Shear conncectors shall be ½-in. x 3-in. studs or machine bolts welded to the crests of the pipe corrugations. Approximately 530 shear connectors are required.

3. The existing pipe may have a slight deformation requiring field bending and/or cutting of the reinforcing steel. Payment for any necessary adjustments will be considered incidental to related Contract items.

4. Reinforcing steel shall have a minimum concrete cover of 2 inches unless otherwise noted.

5. Payment for removing the ends of the pipe will be considered incidental to Contract items.

6. Payment for the asphalt emusion will be considered incidental to related Contract items.

7. Stream water shall not be allowed contact with fresh concrete until the PH factor is 8.5 or less and within the PH unit of the background PH level in the stream.

STATE OF MAINE
DEPARTMENT OF TRANSPORTATION

STATE PROJECT No. 017875.00

BRIDGE NO. 3024

PIN 17875.00

BRIDGE PLANS

		BY	DATE
PROJ. MANAGER	M. Purin		
DESIGN-DETAILED	J. Velleux	D. Damren	5/2011
CHECKED-REVIEWED	MAP		3/2011
DESIGN2-DETAILED2			
DESIGN3-DETAILED3			
REVISIONS 1			
REVISIONS 2			
REVISIONS 3			
REVISIONS 4			
FIELD CHANGES			

SIGNATURE

P.E. NUMBER

DATE

TANNERY BRIDGE
DOUGLAS BROOK
CORNISH \ LIMINGTON YORK COUNTY

PIPE DETAILS

SHEET NUMBER

5

OF 10

Filename: ...\msta\005_Pipe_Details.dgn Division: BRIDGE Username: Joel.R.Veilleux Date:5/16/2011

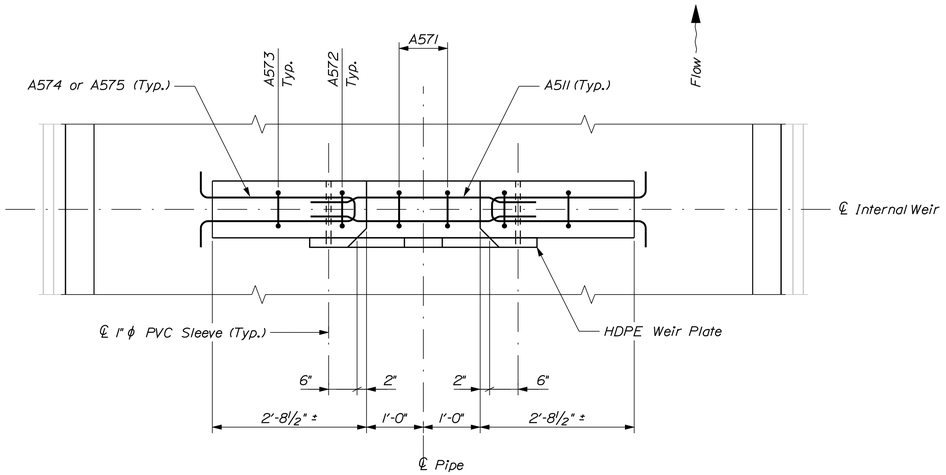

INTERNAL WEIR PLAN

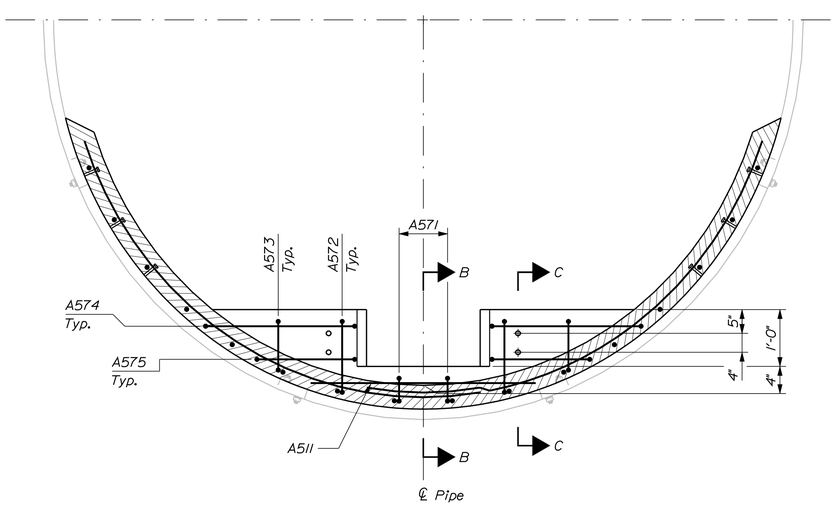

INTERNAL WEIR ELEVATION
Looking Downstream

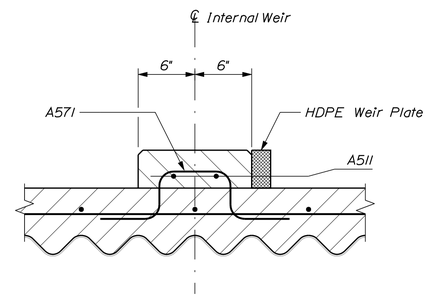

SECTION B - B

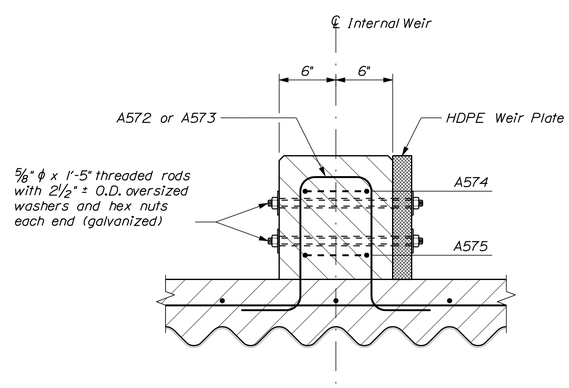

SECTION C - C

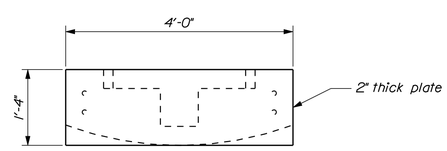

HDPE WEIR PLATE ELEVATION

HDPE WEIR PLATE NOTES

1. HDPE Weir Plates shall be any commercially available black, high density polyethylene (HDPE) stock meeting the size requirements shown.

2. Plates for the internal weirs shall be cut, by the contractor, to fit the circular shape of the concrete invert lining. The exact notch opening being cut out of the weir plates will be determined and performed by a representative of MaineDOT, Environmental Office. Each plate shall have 4 ~ 1-in. diameter holes to match the PVC sleevelocations in the concrete weirs.

3. Each weir plate shall be clearly marked to indicate its location and orientation using the number of the weir and the word "flow" with an arrow to indicate the direction of the stream flow.

4. Arrangements shall be made to deliver the weir plates and connectors to the MaineDOT Environmental Office upon completion of the project by contacting Charlie Hebson or John Perry at 207-624-3100.

5. Payment for all work and materials associated with the HDPE Weir Plates, including connectors, will be considered incidental to Item No. 502.326, Structural Concrete Fish Weirs.

INTERNAL WEIR NOTES

1. For construction of the concrete weirs, the Contractor may use stay - in - place FRP forms (designed by others) in place of traditional formwork.

STATE OF MAINE
DEPARTMENT OF TRANSPORTATION

STATE PROJECT No. 017875.00

PIN 17875.00

BRIDGE NO. 3024

BRIDGE PLANS

		BY	DATE
PROJ. MANAGER	M. Purin		
DESIGN-DETAILED	J. Velleux	D. Damren	5/2011
CHECKED-REVIEWED	MAP		3/2011
DESIGN2-DETAILED2			
DESIGN3-DETAILED3			
REVISIONS 1			
REVISIONS 2			
REVISIONS 3			
REVISIONS 4			
FIELD CHANGES			

SIGNATURE

P.E. NUMBER

DATE

TANNERY BRIDGE
DOUGLAS BROOK
CORNISH / LIMINGTON YORK COUNTY

INTERNAL WEIRS

SHEET NUMBER
6
OF 10

Filename: ...\msta\006_Internal Weirs.dgn Division: BRIDGE Username: Joel.R.Veilleux Date:5/16/2011

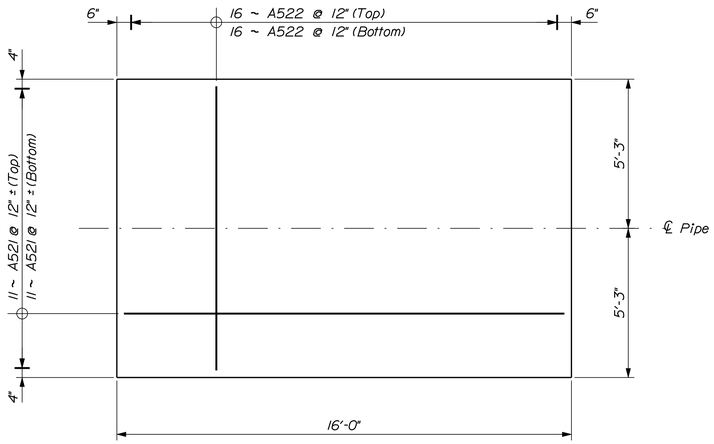

EXTERNAL WEIR FOOTING PLAN

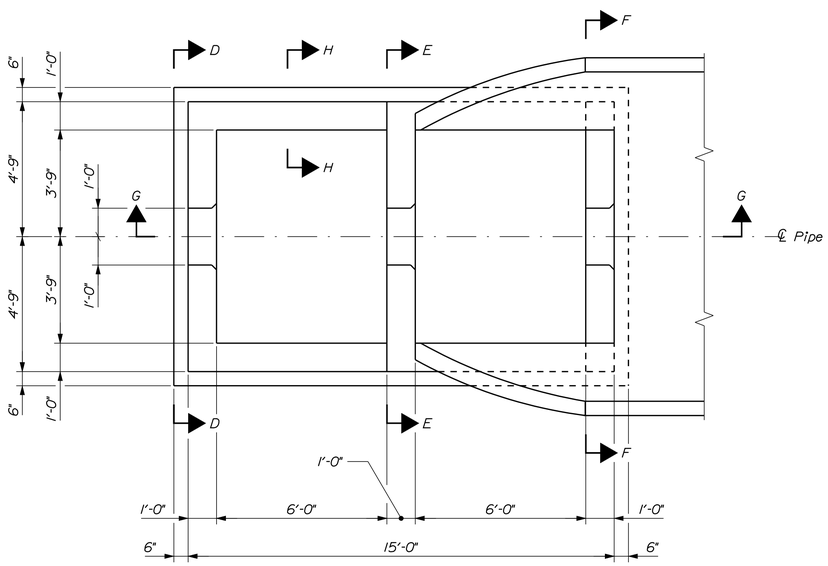

EXTERNAL WEIR PLAN

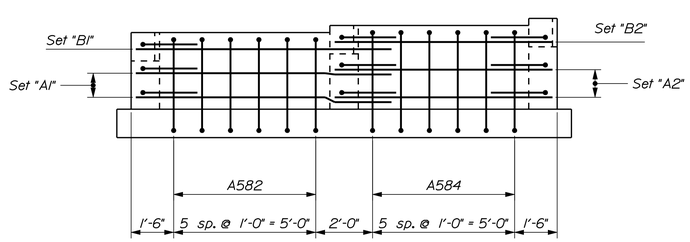

EXTERNAL WEIR ELEVATION

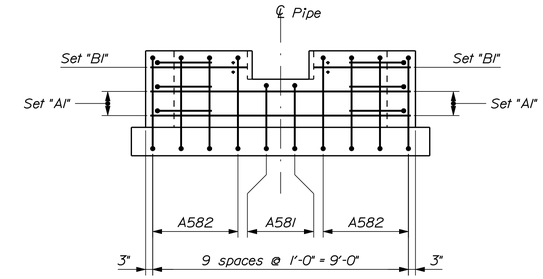

VIEW D - D

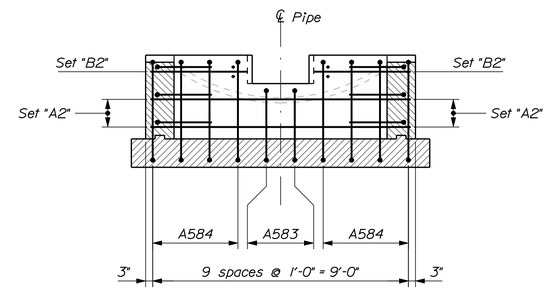

SECTION E - E

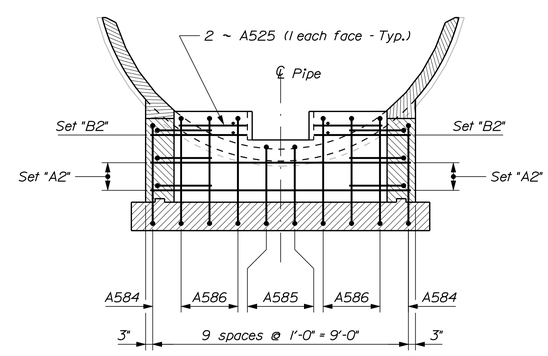

SECTION F - F

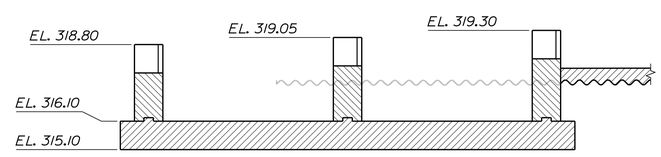

SECTION G - G

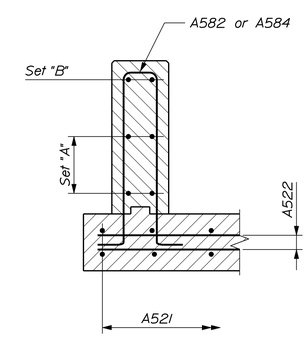

SECTION H - H

EXTERNAL WEIR NOTES

1. Reinforcing steel shall have a minimum concrete cover of 2 inches in the walls and 3 inches in the footings unless otherwise noted.

2. The external weir shall be backfilled with the material excavated to construct the weir. Payment will be considered incidental to Item No. 502.326, Structural Concrete Fish Weirs.

STATE OF MAINE
DEPARTMENT OF TRANSPORTATION

STATE PROJECT No. 017875.00

PIN 17875.00

BRIDGE NO. 3024

BRIDGE PLANS

		BY	DATE
PROJ. MANAGER	M. Parlin		
DESIGN-DETAILED	J. Veilleux	D. Damren	5/2011
CHECKED-REVIEWED	MAP		3/2011
DESIGN2-DETAILED2			
DESIGN3-DETAILED3			
REVISIONS 1			
REVISIONS 2			
REVISIONS 3			
REVISIONS 4			
FIELD CHANGES			

SIGNATURE

P.E. NUMBER

DATE

TANNERY BRIDGE
DOUGLAS BROOK
CORNISH \ LIMINGTON YORK COUNTY

EXTERNAL WEIRS

SHEET NUMBER

7

OF 10

Filename: ...\msta\007_External Weirs.dgn Division: BRIDGE Username: Joel.R.Veilleux Date:5/16/2011

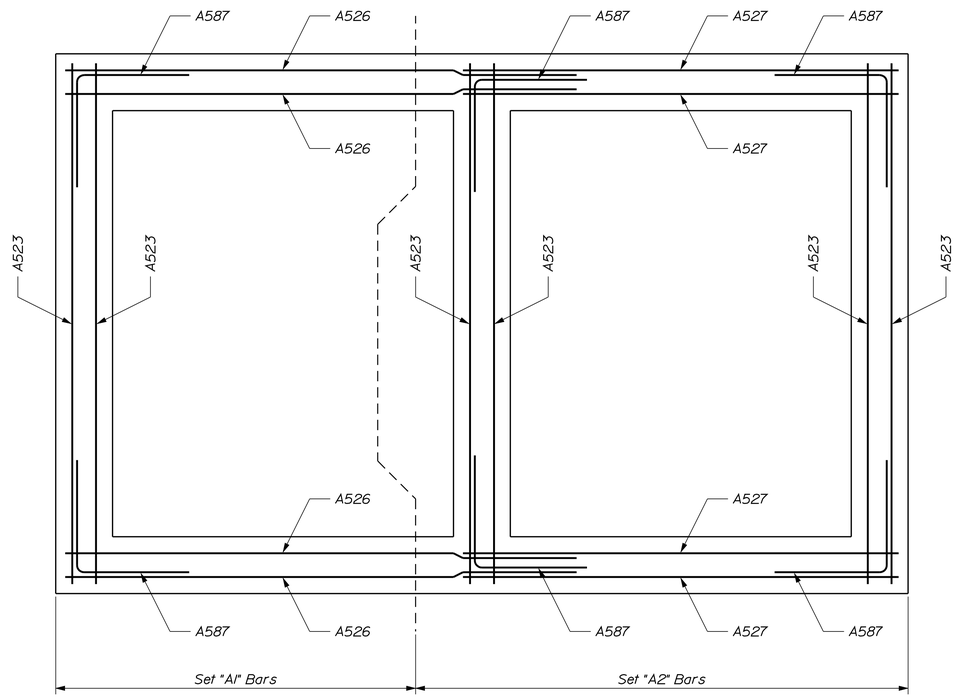

REINFORCING SET "A"

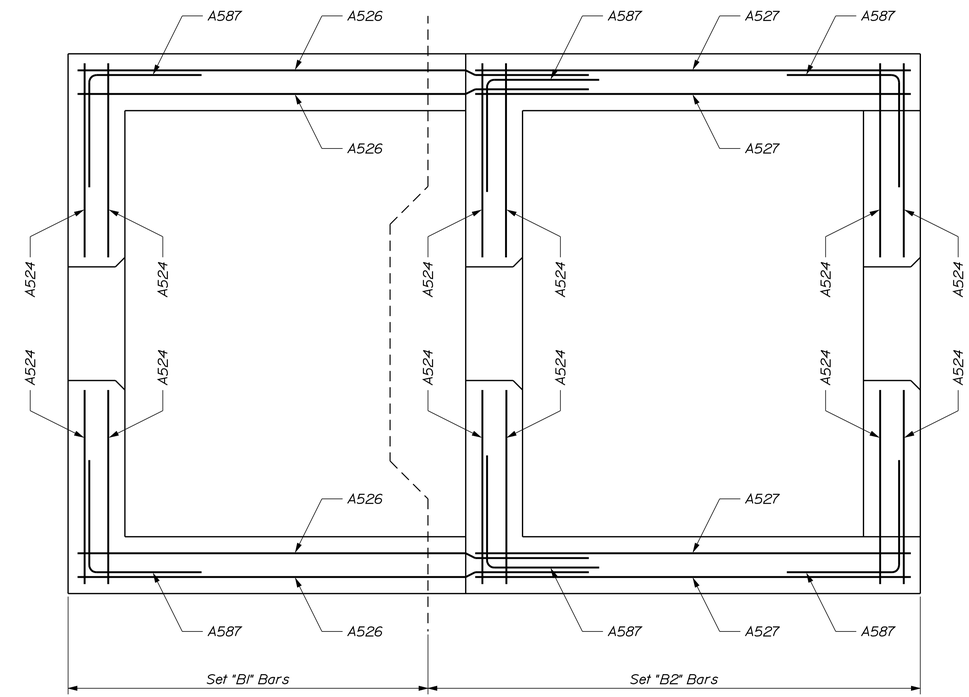

REINFORCING SET "B"

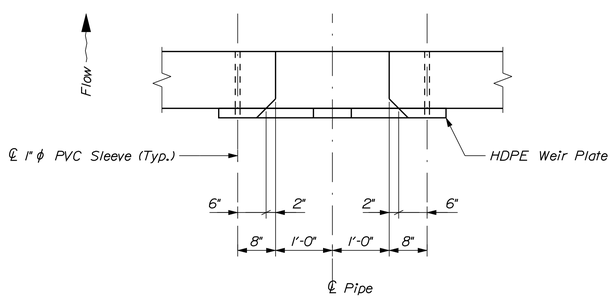

WEIR TROUGH PLAN

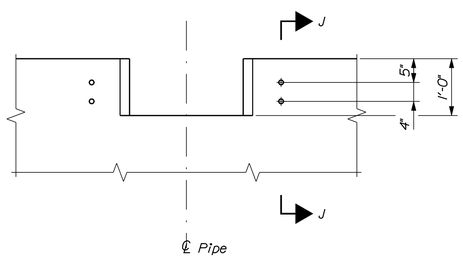

WEIR TROUGH ELEVATION
Looking Downstream

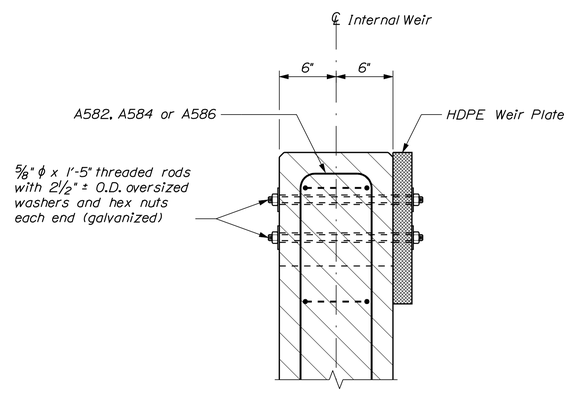

SECTION J - J

STATE OF MAINE
DEPARTMENT OF TRANSPORTATION

STATE PROJECT No. 017875.00

PIN 17875.00

BRIDGE NO. 3024

BRIDGE PLANS

PROJ. MANAGER	M. Parlin	BY	DATE
DESIGN-DETAILED	J. Velleux	D. Damren	5/2011
CHECKED-REVIEWED	MAP		3/2011
DESIGN2-DETAILED2			
DESIGN3-DETAILED3			
REVISIONS 1			
REVISIONS 2			
REVISIONS 3			
REVISIONS 4			
FIELD CHANGES			

SIGNATURE

P.E. NUMBER

DATE

TANNERY BRIDGE
DOUGLAS BROOK
CORNISH \ LIMINGTON YORK COUNTY

EXTERNAL WEIRS

SHEET NUMBER

8

OF 10

Filename: ...\msta\008_External Weirs.dgn Division: BRIDGE Username: Joel.R.Veilleux Date:5/16/2011

STRAIGHT BARS

MARK	QTY.	LENGTH	LOCATION	MARK	QTY.	LENGTH	LOCATION
			INVERT LINING				
A501	48	30'-0"	Longitudinal				
A502	2	9'-0"	Longitudinal				
A503	2	7'-0"	Longitudinal				
A504	2	4'-0"	Longitudinal				
			INTERNAL FISH WEIR				
A511	8	4'-0"	Horizontal				
			EXTERNAL FISH WEIR				
A521	22	15'-6"	Footing				
A522	32	10'-0"	Footing				
A523	12	9'-2"	Horizontal				
A524	12	3'-5"	Horizontal				
A525	4	2'-5"	Horizontal				
A526	12	9'-0"	Horizontal				
A527	12	7'-8"	Horizontal				

BENT BARS

MARK	QTY.	LENGTH	TYPE	A	B	C	D	E	F	G	H	O	R	LOCATION
								INVERT LINING						
A551	162	9'-0"	PR	--	--	--	--	--	--	--	1'-6"	8'-3"	--	Transverse
A552	2	8'-9"	PR	--	--	--	--	--	--	--	1'-5"	8'-0"	--	Transverse
A553	2	8'-2"	PR	--	--	--	--	--	--	--	1'-3"	7'-7"	--	Transverse
A554	2	7'-6"	PR	--	--	--	--	--	--	--	1'-1"	7'-1"	--	Transverse
A555	2	6'-10"	PR	--	--	--	--	--	--	--	0'-11"	6'-7"	--	Transverse
A556	2	6'-1"	PR	--	--	--	--	--	--	--	0'-9"	5'-10"	--	Transverse
A557	2	5'-4"	PR	--	--	--	--	--	--	--	0'-7"	5'-2"	--	Transverse
A558	2	1'-0"	PR	--	--	--	--	--	--	--	0'-0 1/2"	1'-0"	--	Transverse
A559	2	1'-9"	PR	--	--	--	--	--	--	--	0'-0 3/4"	1'-9"	--	Transverse
A560	2	2'-5"	PR	--	--	--	--	--	--	--	0'-11 1/2"	2'-5"	--	Transverse
A561	2	3'-1"	PR	--	--	--	--	--	--	--	0'-2"	3'-0"	--	Transverse
A562	2	3'-8"	PR	--	--	--	--	--	--	--	0'-3"	3'-7"	--	Transverse
								INTERNAL FISH WEIR						
A571	8	2'-8"	SL	0'-6"	0'-6"	0'-8"	0'-6"	--	--	0'-6"	--	--	--	Vertical
A572	8	4'-4"	SL	0'-6"	1'-4"	0'-8"	1'-4"	--	--	0'-6"	--	--	--	Vertical
A573	8	3'-6"	SL	0'-6"	0'-11"	0'-8"	0'-11"	--	--	0'-6"	--	--	--	Vertical
A574	8	6'-11"	SL	0'-6"	2'-8"	0'-6 1/2"	2'-8"	--	--	0'-6"	--	--	--	Horizontal
A575	8	5'-1"	SL	0'-6"	1'-9"	0'-6 1/2"	1'-9"	--	--	0'-6"	--	--	--	Horizontal
								EXTERNAL FISH WEIR						
A581	2	6'-0"	SL	0'-6"	2'-2"	0'-8"	2'-2"	--	--	0'-6"	--	--	--	Vertical
A582	20	8'-0"	SL	0'-6"	3'-2"	0'-8"	3'-2"	--	--	0'-6"	--	--	--	Vertical
A583	2	6'-6"	SL	0'-6"	2'-5"	0'-8"	2'-5"	--	--	0'-6"	--	--	--	Vertical
A584	22	8'-6"	SL	0'-6"	3'-5"	0'-8"	3'-5"	--	--	0'-6"	--	--	--	Vertical
A585	2	7'-0"	SL	0'-6"	2'-8"	0'-8"	2'-8"	--	--	0'-6"	--	--	--	Vertical
A586	6	9'-0"	SL	0'-6"	3'-8"	0'-8"	3'-8"	--	--	0'-6"	--	--	--	Vertical
A587	18	4'-0"	SL	0'-6"	2'-0"	0'-8"	2'-0"	--	--	0'-6"	--	--	--	Horizontal

TYPE - BENDING DIAGRAMS

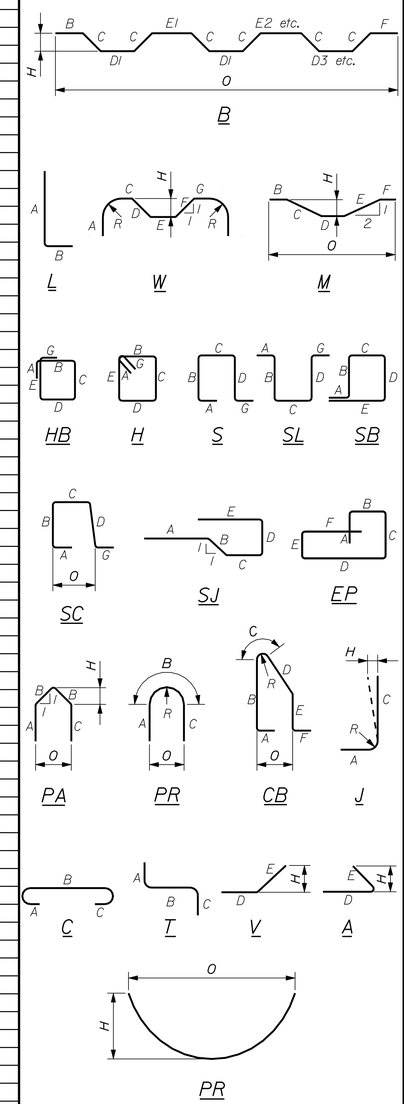

All dimensions are out-to-out of bar.

Bending details and hooks shall conform to the recommendations of the current revision of ACI Standard 315 and ACI Standard 318.

Reinforcing Bar: ASTM A615/A615M, Grade 60

GENERAL NOTES

1. The first two digits following the letter(s) of the mark indicate the size ofthe bar:

   Mark "A502" = bar size #5
   Mark "P805" = bar size #8
   Mark "S650" = bar size #6

2. Each crank bar, Type B, may be replaced by two (2) straight bars (one top and one bottom) of the same bar size as the crank bar. Payment in either case shall be based on crank bars as schedule on the plans.

STATE OF MAINE
DEPARTMENT OF TRANSPORTATION

STATE PROJECT No. 017875.00

BRIDGE NO. 3024

PIN 17875.00

BRIDGE PLANS

PROJ. MANAGER	M. Parlin	BY	DATE	
DESIGN-DETAILED	J. Velleux	D. Damren	5/2011	
CHECKED-REVIEWED	MAP		3/2011	
DESIGN2-DETAILED2				
DESIGN3-DETAILED3				
REVISIONS 1				
REVISIONS 2				
REVISIONS 3				
REVISIONS 4				
FIELD CHANGES				

SIGNATURE

P.E. NUMBER

DATE

TANNERY BRIDGE
DOUGLAS BROOK
CORNISH \ LIMINGTON YORK COUNTY

REINFORCING STEEL SCHEDULE

SHEET NUMBER

9

OF 10

Filename: ...\00\bridge\msta\009_Rebar.dgn Division: BRIDGE Username: Joel.R.Veilleux Date:5/16/2011

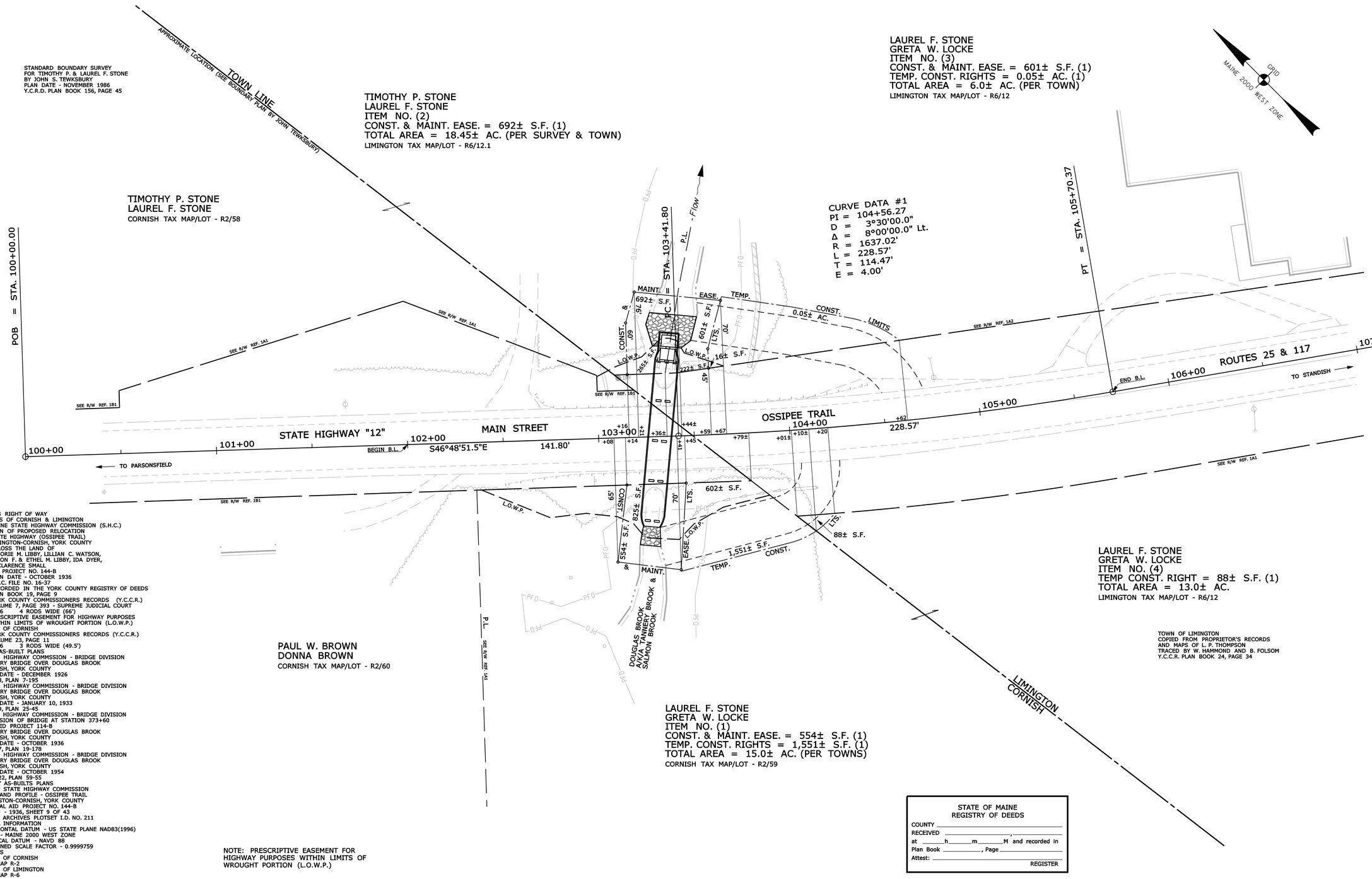

1) EXISTING RIGHT OF WAY
   A) TOWNS OF CORNISH & LIMINGTON
      1) MAINE STATE HIGHWAY COMMISSION (S.H.C.)
         PLAN OF PROPOSED RELOCATION
         STATE HIGHWAY (OSSIPEE TRAIL)
         LIMINGTON-CORNISH, YORK COUNTY
         ACROSS THE LAND OF
         MAJORIE M. LIBBY, LILLIAN C. WATSON,
         SIMON F. & ETHEL M. LIBBY, IDA DYER,
         & CLARENCE SMALL
         F.A. PROJECT NO. 144-B
         PLAN DATE - OCTOBER 1936
         S.H.C. FILE NO. 16-37
         RECORDED IN THE YORK COUNTY REGISTRY OF DEEDS
         PLAN BOOK 19, PAGE 9
      2) YORK COUNTY COMMISSIONERS RECORDS (Y.C.C.R.)
         VOLUME 7, PAGE 393 - SUPREME JUDICIAL COURT
         1826 4 RODS WIDE (66')
      3) PRESCRIPTIVE EASEMENT FOR HIGHWAY PURPOSES
         WITHIN LIMITS OF WROUGHT PORTION (L.O.W.P.)
   B) TOWN OF CORNISH
      1) YORK COUNTY COMMISSIONERS RECORDS (Y.C.C.R.)
         VOLUME 23, PAGE 11
         1876 3 RODS WIDE (49.5')
2) BRIDGE AS-BUILT PLANS
   A) MAINE HIGHWAY COMMSSION - BRIDGE DIVISION
      TANNERY BRIDGE OVER DOUGLAS BROOK
      CORNISH, YORK COUNTY
      PLAN DATE - DECEMBER 1926
      REEL 3, PLAN 7-195
   B) MAINE HIGHWAY COMMISSION - BRIDGE DIVISION
      TANNERY BRIDGE OVER DOUGLAS BROOK
      CORNISH, YORK COUNTY
      PLAN DATE - JANUARY 10, 1933
      REEL 9, PLAN 25-45
   C) STATE HIGHWAY COMMISSION - BRIDGE DIVISION
      EXTENSION OF BRIDGE AT STATION 373+60
      FED. AID PROJECT 114-B
      TANNERY BRIDGE OVER DOUGLAS BROOK
      CORNISH, YORK COUNTY
      PLAN DATE - OCTOBER 1936
      REEL 7, PLAN 19-178
   D) STATE HIGHWAY COMMISSION - BRIDGE DIVISION
      TANNERY BRIDGE OVER DOUGLAS BROOK
      CORNISH, YORK COUNTY
      PLAN DATE - OCTOBER 1954
      REEL 22, PLAN 59-55
3) HIGHWAY AS-BUILTS PLANS
   A) MAINE STATE HIGHWAY COMMISSION
      PLAN AND PROFILE - OSSIPEE TRAIL
      LIMINGTON-CORNISH, YORK COUNTY
      FEDERAL AID PROJECT NO. 144-B
      DATED - 1936, SHEET 9 OF 43
      EPLAN ARCHIVES PLOTSET I.D. NO. 211
4) CONTROL INFORMATION
   A) HORIZONTAL DATUM - US STATE PLANE NAD83(1996)
      ZONE - MAINE 2000 WEST ZONE
      VERTICAL DATUM - NAVD 88
      COMBINED SCALE FACTOR - 0.9999759
5) TAX MAPS
   A) TOWN OF CORNISH
      TAX MAP R-2
   B) TOWN OF LIMINGTON
      TAX MAP R-6

NOTE: PRESCRIPTIVE EASEMENT FOR HIGHWAY PURPOSES WITHIN LIMITS OF WROUGHT PORTION (L.O.W.P.)

PIN 17875.00

SYMBOLS
- IP or ● R/F (IRON PIPE or PIN FOUND)
- ST. (SEPTIC TANK)
- (ROW MONUMENT)
- &BM (TRAVERSE POINT)
- WELL
- GROUNDING UNIT LINE
- CONSTRUCTION LIMIT LINE
- PROPERTY LINE
- LIMITS OF WRO. RIGHT PORTION (L.O.W.P.)
- EXISTING RIGHT OF WAY
- NEW RIGHT OF WAY
- NEW ROW WITHIN EXIST. ROW
- CONTROL OF ACCESS
- WATER LINE
- GAS LINE
- ELECTRIC LINE
- TELEPHONE LINE
- SEWER LINE

ITEM	TECH	CHECKED
BASE MAP		
EXIST. R/W	G.L.L.	C.W.K.
PROP. LINES	G.L.L.	
AREAS	G.L.L.	

STATE OF MAINE
DEPARTMENT OF TRANSPORTATION
16 STATE HOUSE STATION - AUGUSTA, ME 04333-0016
CORNISH/LIMINGTON
RIGHT OF WAY MAP

REVISIONS

NO.	DATE	DESCRIPTION	BY

PLAN FILED IN PLAN BOOK PAGE COUNTY RECORD

NO.	GRANTOR	INSTRUMENT	DATE	BOOK	PAGE

DAVID A. COLE
COMMISSIONER
KENNETH L. SWEENEY
CHIEF ENGINEER

DATE

STATE OF MAINE
CHRISTOPHER W. KNIGHT 2327
PROFESSIONAL LAND SURVEYOR

To the best of my knowledge and belief the Highway Right of Way lines depicted hereon are based upon a survey conforming to the Standards of Practice promulgated by the Maine Board of Licensure for Professional Land Surveyors 02-360 CMR, Chapter 90; Exceptions: (1) No separate survey report, (2) Monumentation only as shown on plan. See sheet X of this plan set for coordinates. (3) Other boundary lines, including lines between abutters are approximate and for general reference purposes only.

STATE HIGHWAY "12"
ROUTE 25 & 117 - MAIN STREET/OSSIPEE TRAIL
CORNISH/LIMINGTON YORK COUNTY
FEDERAL AID PROJECT NO. STP-1787(500)X

OCTOBER 2010	RIGHT-OF-WAY MAP	D.O.T. FILE NO. 16-472
SCALE 1" = 25'	SHEET 1 OF 1	

SHEET NUMBER
10
OF 10

Filename: ...\00\ROW\MSTA\010_RWPLAN1.dgn Division: BRIDGE Username: Joel.R.Veilleux Date:5/16/2011