STATE OF MAINE
DEPARTMENT OF TRANSPORTATION

TMSI

PROJECT AREA

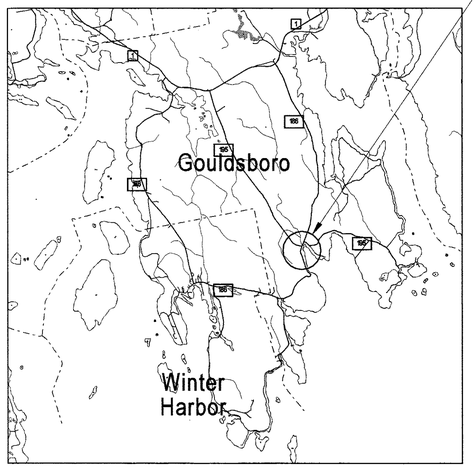

LOCATION MAP

2 0 2 4

Scale in Miles

GOULDSBORO
HANCOCK COUNTY

ROUTE 186

PROJECT NO. SB-2008-ME-8

HIGHWAY IMPROVEMENT PROJECT

(SCHOODIC NATIONAL SCENIC BYWAY GATEWAY FACILITY)

INDEX OF SHEETS

Description	Sheet No.
Title Sheet	1
Typical Sections & Details	2
Estimated Quantities & Earthwork Summary	3
Construction Notes & Drainage Summary	4
Geometry/Layout Plan	5
Grading Plan	6
Site Plan	7

PLAN LEGEND

Town, County, State
Property Lines
R/W Lines-Existing
R/W Lines-Proposed

Culvert-Existing
Culvert Proposed

Curbing — Existing — Proposed
Type 1
Type 3
Type 5

Outline of Bodies of Water
Ledge
Buildings

Trees — Conifer — Deciduous
Tree Line
Clearing Limit Line — CLL

Centerline-Existing
Centerline-Proposed — 10+00
Travelway-Existing
Travelway-Proposed
Railroad

Catch Basins — Existing — Proposed
Manholes — Existing — Proposed
Proposed Underdrain
Proposed Ditch
Existing Ditch

Utility Poles — Existing — Proposed
Fire Hydrants — Existing — Proposed
Existing Water Line — W
Existing San. Sewer
Existing San. Sewer Manhole

Guardrail-Existing
Guardrail-Proposed
Guardrail-Cable, Other

TRAFFIC DATA

Current (2011) AADT **1570**
Design Speed (mph) **30**
Functional Class: ... **MAJOR COLLECTOR**

PROGRAM AREA: HIGHWAY PROGRAM

SCOPE OF WORK: SCENIC BYWAY FACILITY PARKING LOT, SIDEWALKS, and AMENITIES

STATE OF MAINE
DEPARTMENT OF TRANSPORTATION

APPROVED

	DATE
COMMISSIONER:	4/21/11
CHIEF ENGINEER:	4/29/11

STATE OF MAINE — JAMES L. EASON No. 7960 — LICENSED PROFESSIONAL ENGINEER

SIGNATURE	
P.E. NUMBER	7960
DATE	APRIL 29, 2011

PIN: 17639.00

PROJECT INFORMATION

PROGRAM	HIGHWAY
PROJECT MANAGER	ANDY MACDONALD
DESIGNER	LARRY JOHANNESMAN
CONSULTANT	TERRA MAGNA SERVICES, INC.
PROJECT RESIDENT	
CONTRACTOR	
PROJECT COMPLETION DATE	

SB-2008-ME-8

GOULDSBORO
SCHOODIC BYWAY

TITLE SHEET

SHEET NUMBER

1

1 OF 7

Filename: $file$ Division: $wkgroup$ Username: $user$ Date: $date$

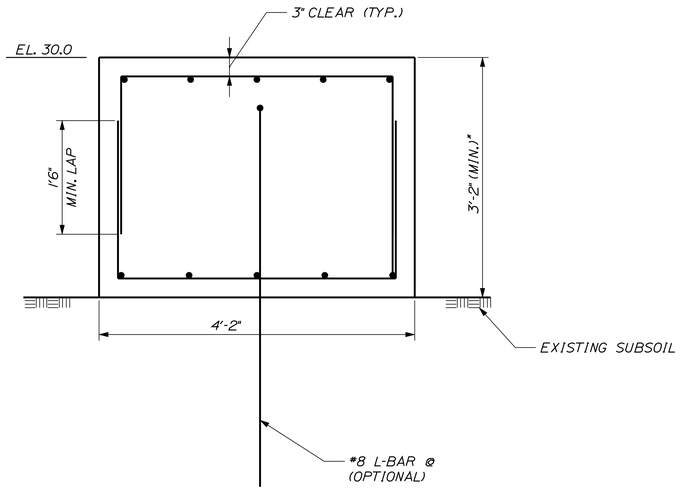

SIDE VIEW

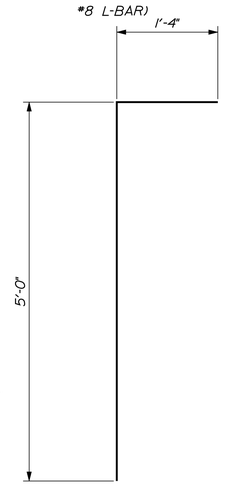

#8 EPOXY COATED DOWEL @ 2' O.C., DRILLED AND GROUTED IN 2.5 * HOLE. MIN. EMBED = 2'-6" (OPTIONAL, NOT REQUIRED)

IF USED, DOWELS, DRILLING, AND GROUTING WILL BE INCIDENTAL TO PAY ITEM 502.III.

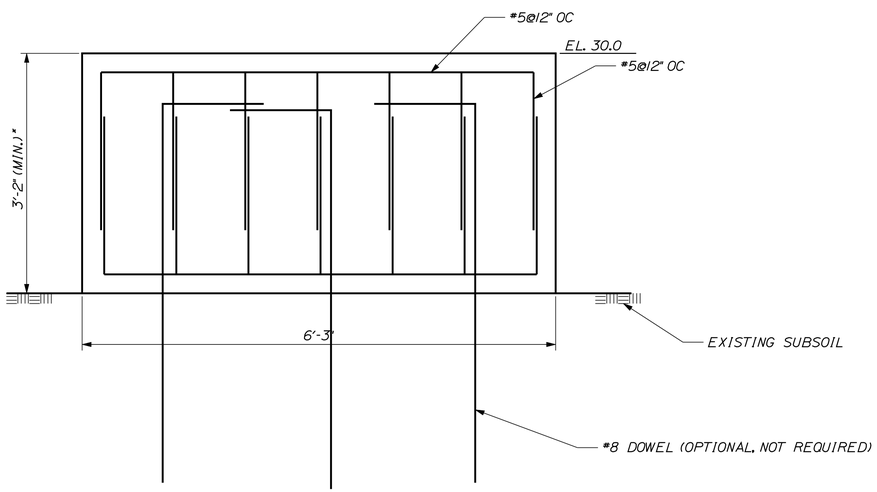

FRONT VIEW

CAST-IN-PLACE SCULPTURE FOUNDATION

NOTES:

1. IF NO BEDROCK ENCOUNTERED, RECOMMENDED SOIL PRESSURE OF 3000 PSF.
2. CONCRETE SHALL BE CLASS 'A'.
3. PLACE CONCRETE IN DRY CONDITION.
4. ANY DEWATERING NECESSARY TO PLACE CONCRETE SHALL BE CONSIDERED INCIDENTAL TO ITEM 502.III CONCRETE FOOTING.
5. * FIELD VERIFY DEPTH OF BEDROCK. IF GREATER THAN 3'-2" BELOW TOP OF FOUNDATION, EXTEND CONCRETE TO BEDROCK AND LENGTHEN REINFORCING ACCORDINGLY.
6. PAYMENT FOR CAST-IN-PLACE SCULPTURE FOUNDATION WILL BE MADE UNDER PAY ITEM 502.III. REINFORCING STEEL SUPPLIED, DELIVERED AND PLACED WILL BE INCIDENTAL TO PAY ITEM 502.III.

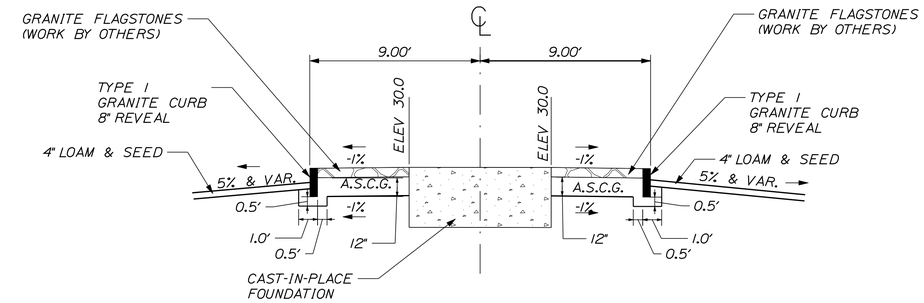

RAISED SCULPTURE ISLAND

STA. 20+00.00, 50.83' LT

FLAGSTONE PAVING BY OTHERS. TOP OF CURB ELEVATION TO BE SET IN FIELD PENDING STONE THICKNESS

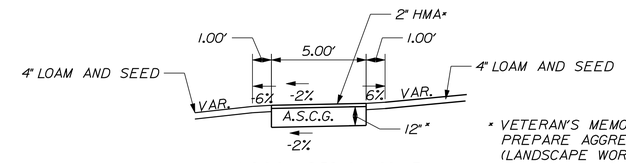

A.S.C.G. = 18.52 CU/100 LF

TYPICAL 5' HMA WALK

STA. 20+36.82 TO STA. 20+74.61 LT
STA. 20+97.80 TO STA. 21+63.88 LT
STA. 20+73.38 TO STA. 20+87.84 LT
STA. 10+12.80 TO STA. 10+86.30 LT

* VETERAN'S MEMORIAL AREA USE 14" A.S.C.G. PREPARE AGGREGATE BASE TO FINAL GRADE (LANDSCAPE WORK BY OTHERS)

* MODEL LIGHTHOUSE PAD USE 14" A.S.C.G. PREPARE AGGREGATE BASE TO FINAL GRADE (LANDSCAPE PAVERS BY OTHERS)

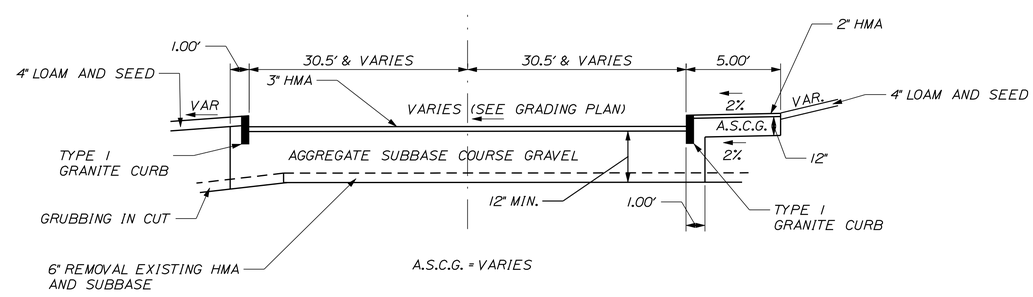

PROPOSED PARKING LOT

STA. 10+14.3 TO STA. 11+03.8

REMOVE EXISTING PAVEMENT AND GRASSED AREAS TO TYPICAL DEPTH OF 6" AND REGRADE. PLACE VARIABLE DEPTH AGGREGATE SUBBASE COURSE GRAVEL TO VARIABLE DEPTH.

NOTE:

1. THE PAVEMENT, BASE, AND SUBBASE DEPTHS AS SHOWN ON THE PLANS ARE INTENDED TO BE NOMINAL.
2. EXCEPT WHERE NOTED, THE GRAVEL QUANTITY CALCULATION IS BASED ON 4" LOAM. THE ACTUAL DEPTH MAY VARY. SEE THE GENERAL NOTES.
3. THE STATIONING SHOWN UNDER EACH TYPICAL IS APPROXIMATE.
4. A.S.C.G. = AGGREGATE SUBBASE COURSE - GRAVEL
   H.M.A. = HOT MIX ASPHALT

NOT TO SCALE

STATE OF MAINE
DEPARTMENT OF TRANSPORTATION

SB-2008-ME-8

PIN 17639.00

HIGHWAY PLANS

	BY	DATE
PROJ. MANAGER	A. MACDONALD	
DESIGN-DETAILED	JLE	4-11
CHECKED-REVIEWED	ALG	4-11
DESIGN2-DETAILED2		
DESIGN3-DETAILED3		
REVISIONS 1		
REVISIONS 2		
REVISIONS 3		
REVISIONS 4		
FIELD CHANGES		

SIGNATURE
7960
P.E. NUMBER
APRIL 29, 2011
DATE

GOULDSBORO
SCHOODIC BYWAY

TYPICAL SECTIONS & DETAILS

SHEET NUMBER
2
OF 7

Filename: $file$ Division: $wkgroup$ Username: $user$ Date: $date$

ESTIMATED QUANTITIES

	ITEM NO.	DESCRIPTION	QUANTITY	UNIT
	203.2001	COMMON EXCAVATION - PLAN QUANTITY	300	CY
	203.24	COMMON BORROW	350	CY
*	203.25	GRANULAR BORROW	50	CY
*	206.061	STRUCTURAL EARTH EXC-DRAIN & MINOR STRUCT-BELOW GRADE	25	CY
	304.10	AGGREGATE SUBBASE COURSE - GRAVEL	320	CY
	403.209	HOT MIX ASPHALT, 9.5mm (SW, DRIVES, INCIDENTALS)	91	TON
	502.111	STR CONCRETE FOOTING	3	CY
	603.16	15" CULVERT PIPE OPTION I	120	LF
	609.11	VERTICAL CURB TYPE I	58	LF
	609.12	VERTICAL CURB TYPE I - CIRCULAR	57	LF
	609.238	TERMINAL CURB TYPE I - 8 FT	4	EA
	610.08	PLAIN RIPRAP	10	CY
	613.319	EROSION CONTROL BLANKET	30	SY
	615.0701	LOAM - PLAN QUANTITY	120	CY
	618.1301	SEEDING METHOD NUMBER 1 - PLAN QUANTITY	10	UNIT
	619.1201	MULCH - PLAN QUANTITY	10	UNIT
	620.58	EROSION CONTROL GEOTEXTILE	20	SY
	627.733	4" WHITE OR YELLOW PAINT PVMNT MARKING LINE	250	LF
	627.75	WHITE OR YELLOW PAVEMENT AND CURB MARKING	16	SF
	629.05	HAND LABOR	20	HR
	631.12	ALL PURPOSE EXCAVATOR (INCLUDING OPERATOR)	5	HR
	631.172	TRUCK - LARGE (INCLUDING OPERATOR)	5	HR
	631.22	FRONT END LOADER (INCLUDING OPERATOR)	5	HR
	645.271	REG WARN CONF RTE SIGNS TYPE I	2	SF
	652.34	CONE	20	EA
	652.35	CONSTRUCTION SIGNS	200	SF
	652.361	MAINTENANCE OF TRAFFIC CONTROL DEVICES	1	LS
	652.38	FLAGGER	40	HR
	656.75	TEMP SOIL EROSION AND WATER POLLUTION CONTROL PLAN	1	LS
	659.10	MOBILIZATION	1	LS

* UNDETERMINED LOCATION

SUMMARY OF EARTHWORK AND BORROW

COMMON EXCAVATION FOR ESTIMATE			
PAVEMENT REMOVAL	35 CY		
GRUBBING IN FILL	265 CY		
TOTAL COMMON EXCAVATION			300 CY
FILL FOR BORROW CALCULATIONS			
COMMON FILL	85 CY		
GRUBBING IN FILL	265 CY		
TOTAL FILL			350 CY
ROCK EXCAVATION FOR ESTIMATE			
ROCK EXCAVATION	0 CY		
TOTAL ROCK EXCAVATION			0 CY
AVAILABLE COMMON EXCAVATION FOR BORROW CALCULATIONS			
(1) TOTAL COMMON EXCAVATION			300 CY
DEDUCTIONS:			
GRUBBING IN FILL	265 CY		
PAVEMENT SALVAGE REMOVAL	35 CY		
(2) TOTAL DEDUCTIONS			300 CY
TOTAL AVAILABLE NON-ROCK EXCAVATION (1) MINUS (2)			0 CY
COMPUTATION OF COMMON BORROW FOR ESTIMATE			
(3) TOTAL FILL			350 CY
TOTAL AVAILABLE NON-ROCK EXCAV.	0	X 0.85 =	0 CY
TOTAL AVAILABLE ROCK EXCAV.	0	X 1.33 =	0 CY
(4) TOTAL AVAILABLE EXCAVATION			0 CY
BORROW NEEDED (3) MINUS (4)			350 CY

STATE OF MAINE
DEPARTMENT OF TRANSPORTATION

SB-2008-ME-8

PIN 17639.00

HIGHWAY PLANS

		BY	DATE
PROJ. MANAGER	A. MACDONALD		
DESIGN-DETAILED	ALG	JLE	4-11
CHECKED-REVIEWED	ALG	ALG	4-11
DESIGN2-DETAILED2	JLE	JLE	
DESIGN3-DETAILED3			
REVISIONS 1			
REVISIONS 2			
REVISIONS 3			
REVISIONS 4			
FIELD CHANGES			

SIGNATURE
7960
P.E. NUMBER
APRIL 29, 2011
DATE

GOULDSBORO
SCHOODIC BYWAY

ESTIMATED QUANTITIES
AND EARTHWORK SUMMARY

SHEET NUMBER
3
OF 7

Filename: $file$ Division: $wkgroup$ Username: $user$ Date:$date$

GENERAL NOTES

1. THE UTILITIES INVOLVED IN THIS CONTRACT ARE AS FOLLOWS:

   FAIRPOINT COMMUNICATIONS
   TIME WARNER CABLE
   BANGOR HYDRO-ELECTRIC

2. ALL UTILITY FACILITIES SHALL BE ADJUSTED BY THE RESPECTIVE UTILITIES UNLESS OTHERWISE NOTED.

3. THE CONTRACTOR SHALL COORDINATE WORK WITH THE TOWN OF GOULDSBORO AND THE RESIDENT TO ASSURE INSTALLATION OF PROPOSED UNDERGROUND UTILITIES.

4. ALL CLEARING SHALL BE CONSIDERED INCIDENTAL TO THE CONTRACT AND NO SEPARATE PAYMENT WILL BE MADE. THE ACTUAL LINES FOR CLEARING SHALL BE ESTABLISHED IN THE FIELD BY THE CONTRACTOR AS INDICATED ON THE PLANS AND APPROVED BY THE RESIDENT.

5. GRUBBING IN FILL AREAS ARE APPROXIMATE AND HAVE BEEN USED FOR ESTIMATING PURPOSES ONLY. ACTUAL GRUBBING LIMITS MAY VARY BASED ON FIELD CONDITIONS AS DIRECTED BY THE RESIDENT. ESTIMATED GRUBBING DEPTHS ARE 9 INCHES IN FIELD AREAS.

6. ALL INSLOPE AND DITCHES IN CUT AREAS SHALL BE GRADED AS SHOWN ON THE TYPICALS OR FLATTER, OR AS DIRECTED BY THE RESIDENT.

7. THE CONTRACTOR SHALL PLAN AND CONDUCT THEIR WORK ACCORDINGLY SO THAT UPON FINAL COMPLETION OF THE PROJECT THERE IS NO DROP-OFF FROM THE EDGE OF SHOULDER PAVEMENT. ALL REMAINING OR DISTURBED MATERIAL ON SLOPES OR IN DITCHES ON THE PROJECT SHALL BE CAPABLE OF ATTAINING A GROWTH OF GRASS THAT IS ACCEPTABLE ACCORDING TO STANDARD SPECIFICATION 618.10. NO SEPARATE PAYMENT WILL BE MADE FOR THIS WORK.

8. DRIVEWAY FILL SIDE SLOPES SHALL BE THE 4:1 UNLESS OTHERWISE NOTED ON THE PLANS.

9. ALL WASTE MATERIAL NOT USED ON THE PROJECT SHALL BE DISPOSED OF OFF THE PROJECT IN WASTE AREAS APPROVED BY THE RESIDENT.

10. REQUIRED DITCH PROTECTION SHOWN ON THE PLANS OR IN THE CONSTRUCTION NOTES IS FOR ESTIMATING PURPOSES ONLY. THE ACTUAL TYPE AND LOCATION OF DITCH PROTECTION MAY BE ALTERED BY THE RESIDENT.

11. IF FOUNDATION MATERIAL IS REQUIRED UNDER CULVERTS, IT SHALL MEET THE REQUIREMENTS FOR GRANULAR BORROW - UNDERWATER BACKFILL AND WILL PAID FOR AS GRANULAR BORROW.

12. GRANULAR BORROW USED TO BACKFILL MUCK EXCAVATION OR IN LOW WET AREAS TO 1' ABOVE WATER LEVEL OR OLD GROUND SHALL MEET REQUIREMENTS FOR GRANULAR BORROW UNDERWATER BACKFILL.

13. PAVED ENTRANCES AND PARKING LOT SHALL BE CONSTRUCTED WITH:

    3" HOT MIX ASPHALT AND 12" AGGREGATE SUBBASE COURSE GRAVEL.

14. ALL PAVED WALKS TO BE CONSTRUCTED WITH:

    12" AGGREGATE SUBBASE COURSE-GRAVEL AND 2" HOT MIX ASPHALT UNLESS OTHERWISE NOTED IN THE PLANS OR DIRECTED BY THE RESIDENT.

15. THE FOLLOWING SHALL BE INCIDENTAL TO THE 603 ITEM(S):
    - o ALL DITCHING AT PIPE ENDS
    - o GRANULAR BORROW UNDER THE PIPE SHALL MEET THE REQUIREMENTS FOR UNDERWATER BACKFILL
    - o FLOW LINES MAY BE CHANGED TO MATCH FIELD CONDITIONS

16. NO EXISTING DRAINAGE SHALL BE ABANDONED, REMOVED OR PLUGGED WITHOUT PRIOR APPROVAL OF THE RESIDENT.

17. INLETS AND OUTLETS OF ALL CULVERTS SHALL BE RIPRAPPED UNLESS OTHERWISE NOTED ON THE PLANS OR DIRECTED BY THE RESIDENT.

18. THE CULVERT SIZES SHOWN ON THE PLANS AND CROSS SECTIONS ARE FOR SMOOTHLINED PIPES. FOR COMPARABLE CORRUGATED SIZES SEE THE DRAINAGE TABULATION.

19. LOAM HAS BEEN ESTIMATED FOR DISTURBED LAWN AREAS. ACTUAL PLACEMENT OF THE LOAM SHALL BE AS NOTED ON THE PLANS OR DESIGNATED BY THE RESIDENT.

20. UNLESS OTHERWISE NOTED SEEDING METHOD NO. 1 SHALL BE UTILIZED ON ALL AREAS.

21. LOAM SHALL BE PLACED TO A NOMINAL DEPTH OF 4 INCHES UNLESS OTHERWISE NOTED OR DIRECTED.

22. ANY DAMAGE TO THE SLOPES CAUSED BY THE CONTRACTOR'S EQUIPMENT, PERSONNEL, OR OPERATION SHALL BE REPAIRED TO THE SATISFACTION OF THE RESIDENT. ALL WORK, EQUIPMENT, AND MATERIALS REQUIRED TO MAKE REPAIRS SHALL BE AT THE CONTRACTOR'S EXPENSE.

23. AREAS REQUIRING FILL ON THE PROJECT WILL COME FROM SUITABLE EXCAVATION FROM EXCAVATION AREAS.

24. ESTIMATED QUANTITIES FOR REQUIRED STRUCTURAL EARTH EXCAVATION, DRAINAGE AND MINOR STRUCTURES ARE INFORMATIONAL ONLY AND REPRESENT THE APPROXIMATE MINIMUM QUANTITY REQUIRED TO INSTALL DRAINAGE STRUCTURES. ADDITIONAL EXCAVATION FOR THE CONTRACTOR'S CONVENIENCE OR TO COMPLY WITH BACKSLOPING REQUIREMENTS WILL NOT BE PAID FOR DIRECTLY BUT WILL BE CONSIDERED INCIDENTAL TO THE RELATED DRAINAGE ITEMS.

25. NO SEPARATE PAYMENT FOR SUPERINTENDENT OR FOREMAN WILL BE MADE FOR THE SUPERVISION OF EQUIPMENT BEING PAID FOR UNDER THE EQUIPMENT RENTAL ITEMS.

26. "UNDETERMINED LOCATIONS" SHALL BE DETERMINED BY THE RESIDENT.

27. ALL WORK SHALL BE DONE IN ACCORDANCE WITH THE MAINE DEPARTMENT OF TRANSPORTATION'S BEST MANAGEMENT PRACTICES FOR EROSION CONTROL & SEDIMENT CONTROL, FEBRUARY, 2008.

28. SURVEY INFORMATION BASED ON SKETCH OF EXISTING CONDITIONS PLAN FOR "RHONDA K. SAUL TO INHABITANTS OF TOWN OF GOULDSBORO" BY SHYKA, SHEPPARD, & GARSTER DATED FEBRUARY 25, 2010 PROVIDED FOR USE BY MAINE DEPARTMENT OF TRANSPORTATION.

29. REMOVAL OF EXISTING WOOD OVER CONCRETE STEPS, HANDICAP RAMP, FOUNDATION SHRUBS, MODEL LIGHTHOUSE, TIMBERS AND PLANTS AROUND TOWN SIGN SHALL BE DONE BY TOWN OF GOULDSBORO PRIOR TO CONSTRUCTION.

30. ALL LOCAL PERMITS HAVE BEEN OBTAINED BY THE TOWN OF GOULDSBORO.

31. THE TOWN OFFICE AND WOMAN'S CLUB BUILDING WILL BE AVAILABLE FOR PROJECT MEETINGS.

STATION	CULVERT PIPE											CATCH BASIN					PIPE ARCH				MH	UNDERDRAIN						ELBOWS, TEES, WYES AND INLET GRATE UNITS	REMARKS
	RCP			CMP		OPTION I		OPTION III														TYPE B		TYPE C					
								SMOOTHLINED		CORRUGATED									GAGE OR WALL THICKNESS			TYPE B	OUTLET	SMOOTHLINED		CORRUGATED		DESCRIPTIONS	
	SIZE	LENGTH	CLASS	SIZE	LENGTH	SIZE	LENGTH	SIZE	LENGTH	SIZE	LENGTH	A1-C	B1-C		E	F	SPAN	RISE	LENGTH			LENGTH	LENGTH	SIZE	LENGTH	SIZE	LENGTH		
STA. 10+36.3, 77'± RT TO STA. 10+96.3, 76'± RT						15"	60'																						
STA. 20+62.8, 19.5'± LT TO STA. 21+20.0, 21.0'± LT						15"	60'																						

STATE OF MAINE
DEPARTMENT OF TRANSPORTATION

SB-2008-ME-8

PIN
17639.00

HIGHWAY PLANS

PROJ. MANAGER	A. MACDONALD	BY	DATE
DESIGN-DETAILED	ALG	JLE	4-11
CHECKED-REVIEWED	ALG	ALG	4-11
DESIGN2-DETAILED2	JLE		
DESIGN3-DETAILED3			
REVISIONS 1			
REVISIONS 2			
REVISIONS 3			
REVISIONS 4			
FIELD CHANGES			

SIGNATURE
7960
P.E. NUMBER
APRIL 29, 2011
DATE

GOULDSBORO
SCHOODIC BYWAY

CONSTRUCTION NOTES & DRAINAGE SUMMARY

SHEET NUMBER
4
OF 7

Filename: $file$ Division: $wkgroup$ Username: $user$ Date:$date$

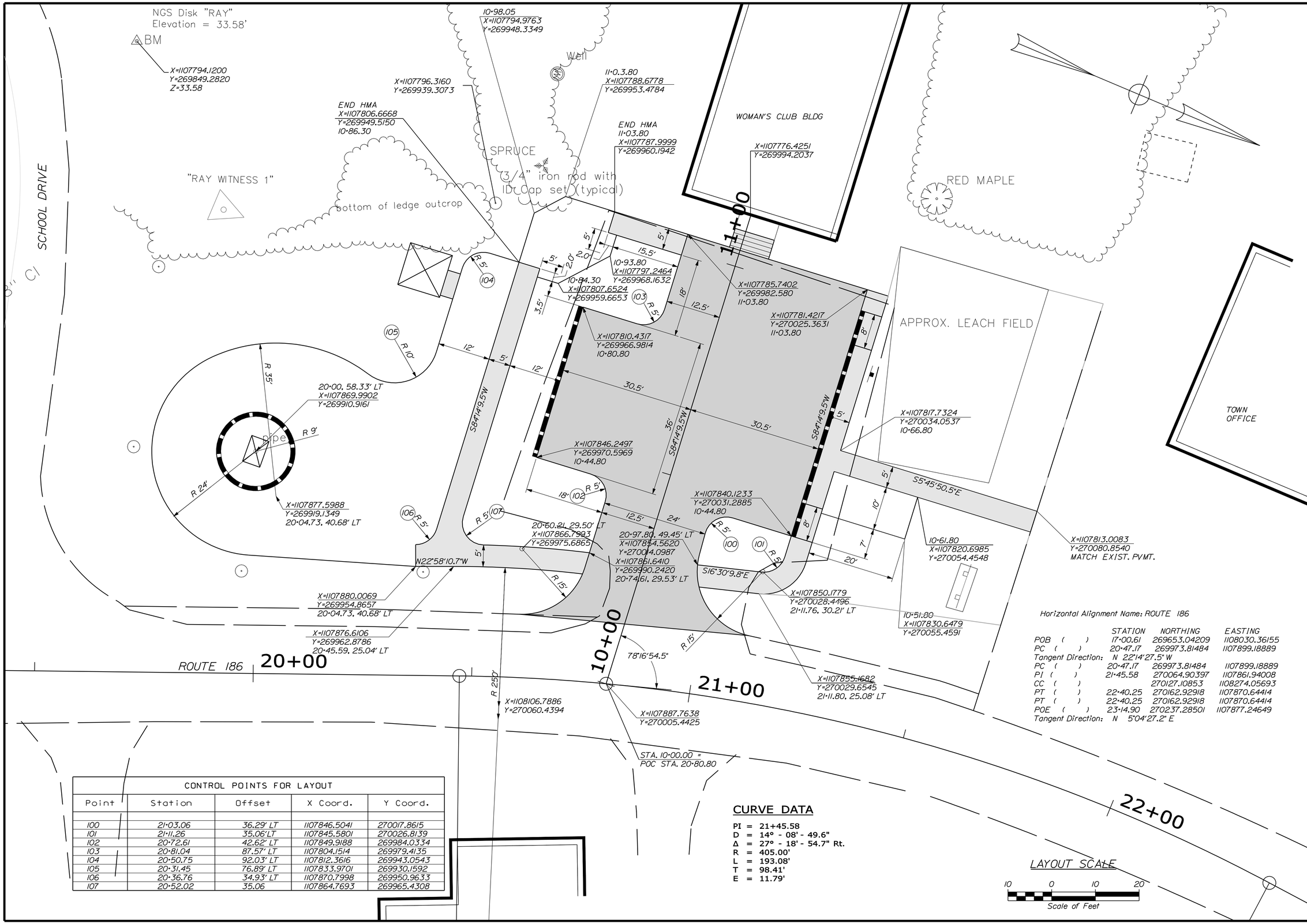

Horizontal Alignment Name: ROUTE 186

	STATION	NORTHING	EASTING
POB ( )	17+00.61	269653.04209	1108030.36155
PC ( )	20+47.17	269973.81484	1107899.18889
Tangent Direction: N 22°14'27.5" W			
PC ( )	20+47.17	269973.81484	1107899.18889
PI ( )	21+45.58	270064.90397	1107861.94008
CC ( )		270127.10853	1108274.05693
PT ( )	22+40.25	270162.92918	1107870.64414
PT ( )	22+40.25	270162.92918	1107870.64414
POE ( )	23+14.90	270237.28501	1107877.24649
Tangent Direction: N 5°04'27.2" E			

CONTROL POINTS FOR LAYOUT

Point	Station	Offset	X Coord.	Y Coord.
100	21+03.06	36.29' LT	1107846.5041	270017.8615
101	21+11.26	35.06'LT	1107845.5801	270026.8139
102	20+72.61	42.62' LT	1107849.9188	269984.0334
103	20+81.04	87.57' LT	1107804.1514	269979.4135
104	20+50.75	92.03' LT	1107812.3616	269943.0543
105	20+31.45	76.89' LT	1107833.9701	269930.1592
106	20+36.76	34.93' LT	1107870.7998	269950.9633
107	20+52.02	35.06	1107864.7693	269965.4308

CURVE DATA

PI = 21+45.58
D = 14° - 08' - 49.6"
Δ = 27° - 18' - 54.7" Rt.
R = 405.00'
L = 193.08'
T = 98.41'
E = 11.79'

LAYOUT SCALE

10 0 10 20
Scale of Feet

STATE OF MAINE
DEPARTMENT OF TRANSPORTATION

SB-2008-ME-8

PIN
17639.00

HIGHWAY PLANS

	BY	DATE
PROJ. MANAGER	A. MACDONALD	
DESIGN-DETAILED	JLE	4-11
CHECKED-REVIEWED	ALG	4-11
DESIGN2-DETAILED2		
DESIGN3-DETAILED3		
REVISIONS 1		
REVISIONS 2		
REVISIONS 3		
REVISIONS 4		
FIELD CHANGES		

SIGNATURE
7960
P.E. NUMBER
APRIL 29, 2011
DATE

GOULDSBORO
SCHOODIC BYWAY

GEOMETRY/LAYOUT PLAN

SHEET NUMBER
5
OF 7

Filename: $file$ Division: $wkgroup$ Username: $user$ Date:$date$

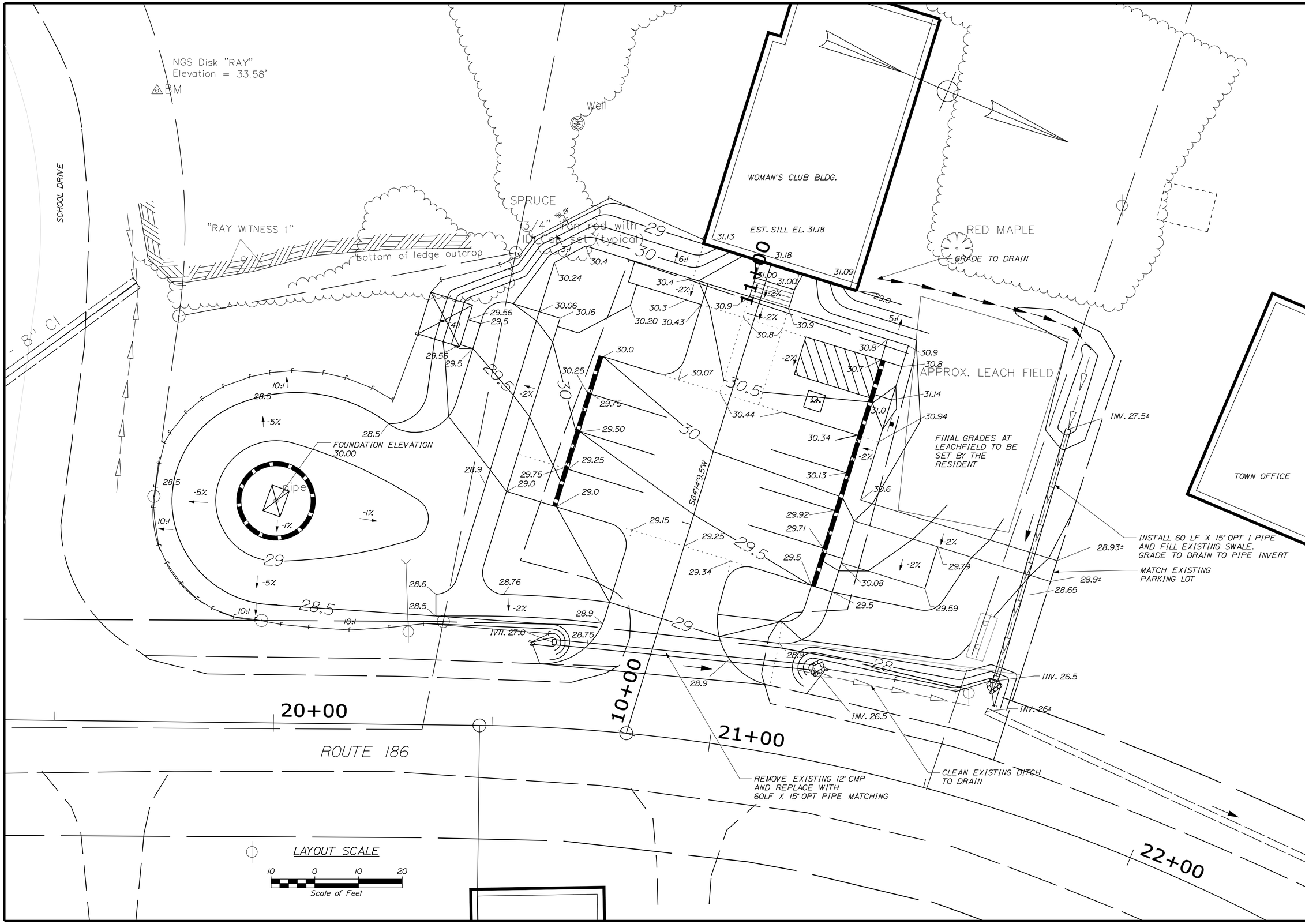

STATE OF MAINE
DEPARTMENT OF TRANSPORTATION

SB-2008-ME-8

PIN 17639.00

HIGHWAY PLANS

	BY	DATE
PROJ. MANAGER	A. MACDONALD	
DESIGN-DETAILED	JLE	4-11
CHECKED-REVIEWED	ALG	4-11
DESIGN2-DETAILED2		
DESIGN3-DETAILED3		
REVISIONS 1		
REVISIONS 2		
REVISIONS 3		
REVISIONS 4		
FIELD CHANGES		

SIGNATURE
7960
P.E. NUMBER
APRIL 29, 2011
DATE

GOULDSBORO
SCHOODIC BYWAY

GRADING PLAN

SHEET NUMBER
6
OF 7

Filename: $file$ Division: $wkgroup$ Username: $user$ Date: $date$

NOTE:

1. SURVEY INFORMATION BASED ON SKETCH OF EXISTING CONDITIONS PLAN FOR "RHONDA K. SAUL TO INHABITANTS OF TOWN OF GOULDSBORO" BY SHYKA, SHEPPARD, & GARSTER DATED FEBRUARY 25, 2010 PROVIDED FOR USE BY MAINE DEPARTMENT OF TRANSPORTATION.

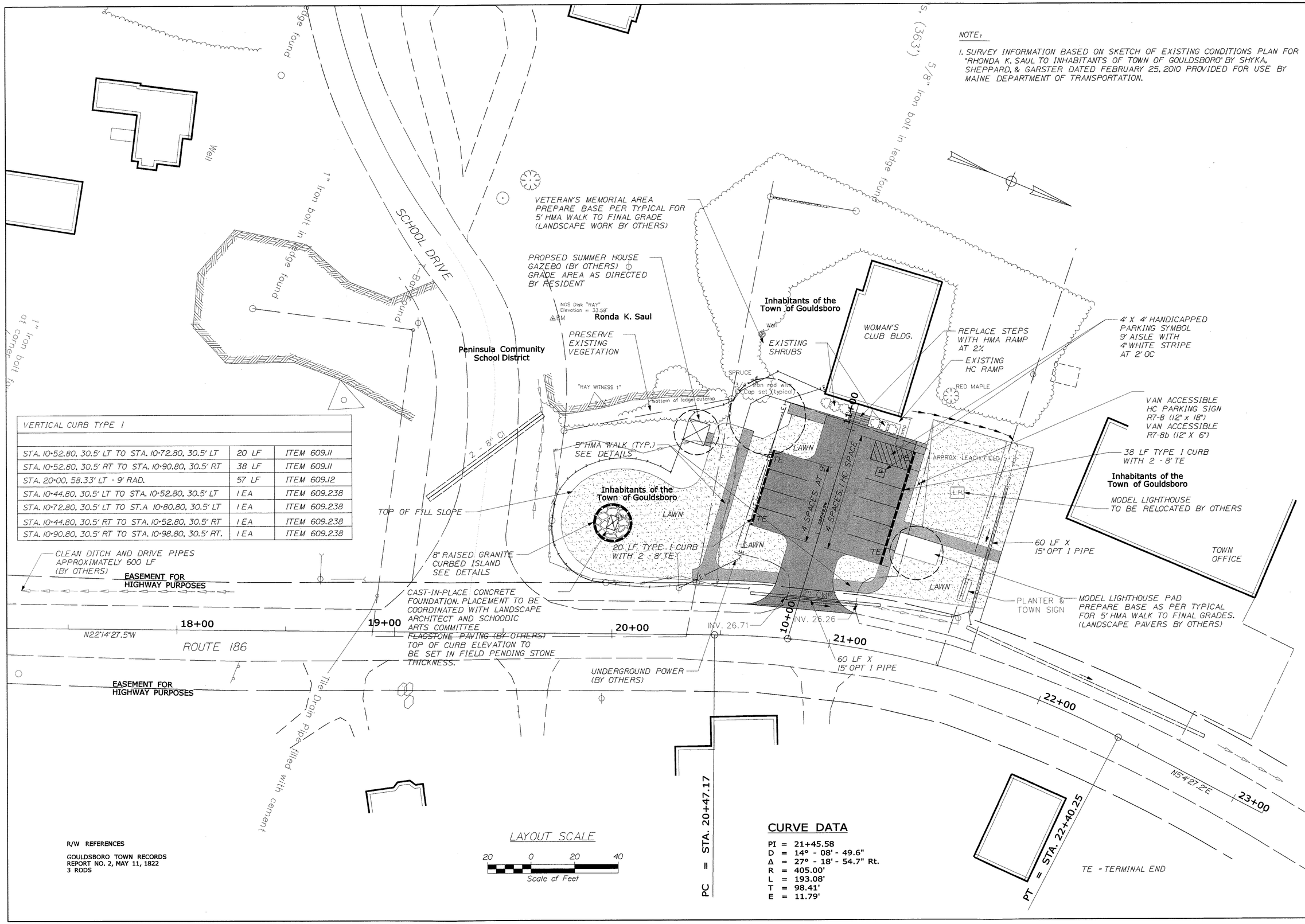

VERTICAL CURB TYPE I		
STA. 10+52.80, 30.5' LT TO STA. 10+72.80, 30.5' LT	20 LF	ITEM 609.11
STA. 10+52.80, 30.5' RT TO STA. 10+90.80, 30.5' RT	38 LF	ITEM 609.11
STA. 20+00, 58.33' LT - 9' RAD.	57 LF	ITEM 609.12
STA. 10+44.80, 30.5' LT TO STA. 10+52.80, 30.5' LT	1 EA	ITEM 609.238
STA. 10+72.80, 30.5' LT TO ST.A 10+80.80, 30.5' LT	1 EA	ITEM 609.238
STA. 10+44.80, 30.5' RT TO STA. 10+52.80, 30.5' RT	1 EA	ITEM 609.238
STA. 10+90.80, 30.5' RT TO STA. 10+98.80, 30.5' RT.	1 EA	ITEM 609.238

R/W REFERENCES

GOULDSBORO TOWN RECORDS
REPORT NO. 2, MAY 11, 1822
3 RODS

CURVE DATA

PI = 21+45.58
D = 14° - 08' - 49.6"
Δ = 27° - 18' - 54.7" Rt.
R = 405.00'
L = 193.08'
T = 98.41'
E = 11.79'

STATE OF MAINE
DEPARTMENT OF TRANSPORTATION

SB-2008-ME-8

PIN 17639.00

HIGHWAY PLANS

STATE OF MAINE JAMES L. GASSON No. 7960 LICENSED PROFESSIONAL ENGINEER

SIGNATURE
7960
P.E. NUMBER
APRIL 29, 2011
DATE

	BY	DATE
PROJ. MANAGER	A. MACDONALD	
DESIGN-DETAILED	JLE	4-11
CHECKED-REVIEWED	ALG	4-11
DESIGN2-DETAILED2		
DESIGN3-DETAILED3		
REVISIONS 1		
REVISIONS 2		
REVISIONS 3		
REVISIONS 4		
FIELD CHANGES		

GOULDSBORO
SCHOODIC BYWAY

SITE PLAN

SHEET NUMBER
7
OF 7

Filename: $file$ Division: $wkgroup$ Username: $user$ Date:$date$