STATE OF MAINE
DEPARTMENT OF TRANSPORTATION

MINOT
ANDROSCOGGIN COUNTY
ROUTE 119
STATE PROJECT NO. 17530.00
PROJECT LENGTH : 0.076 MILES
REHABILITATION

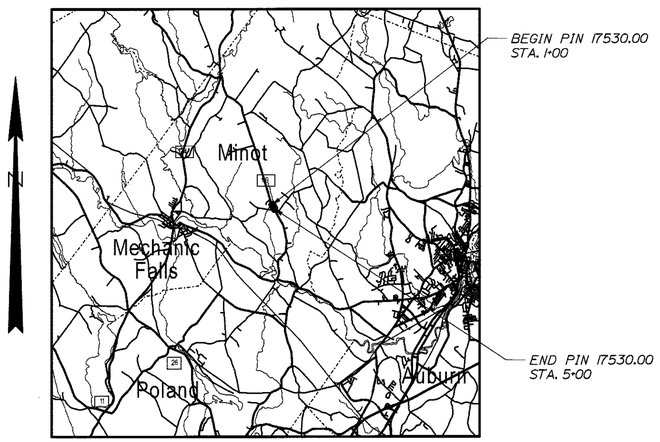

LOCATION MAP

2 0 2 4
Scale in Miles

INDEX OF SHEETS

Description	Sheet No.
Title Sheet	1
Typical Sections	2-3
Box Typical	4-5
General Notes	6
Plan/Profile	7
Cross - Sections	8 - 12
Right of Way	13

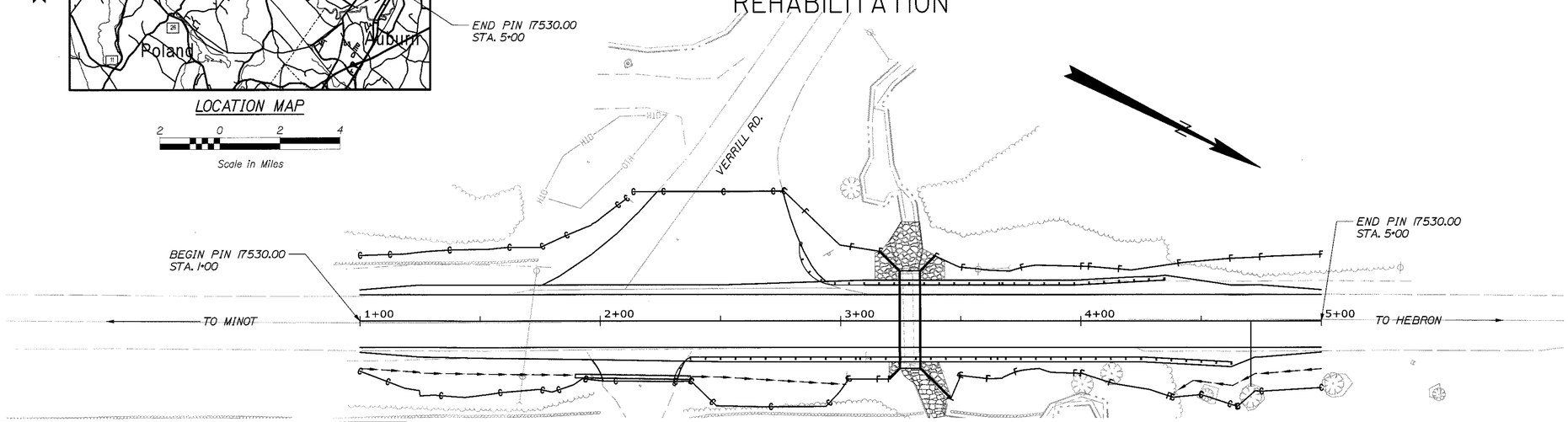

PLAN LEGEND

Town, County, State
Property Lines
R/W Lines-Existing
R/W Lines-Proposed
Culvert-Existing
Culvert Proposed
Curbing — Existing — Proposed
Type 1
Type 3
Type 5
Outline of Bodies of Water
Ledge
Buildings
Trees — Conifer — Deciduous
Tree Line
Clearing Limit Line — CLL
Centerline-Existing
Centerline-Proposed — 10+00
Travelway-Existing
Travelway-Proposed
Railroad
Catch Basins — Existing — Proposed
Manholes — Existing — Proposed
Proposed Underdrain
Proposed Ditch
Existing Ditch
Utility Poles — Existing — Proposed
Fire Hydrants — Existing — Proposed
Existing Water Line
Existing San. Sewer
Existing San. Sewer Manhole
Guardrail-Existing
Guardrail-Proposed
Guardrail-Cable, Other

LAYOUT SCALE

25 0 25 50
Scale in Feet

TRAFFIC DATA

Current (2010) AADT	2120
Future (2022) AADT	2630
Design Speed (mph)	50
Functional Class:	MINOR COLLECTOR

PROGRAM AREA: STRUT REGION I
SCOPE OF WORK: STRUT REPLACEMENT

STATE OF MAINE
DEPARTMENT OF TRANSPORTATION

APPROVED — DATE 3/11/11
COMMISSIONER:
CHIEF ENGINEER: — DATE 3/9/11

STATE OF MAINE — LICENSED — 9318 — PROFESSIONAL ENGINEER

SIGNATURE 9318
P.E. NUMBER 3-9-11
DATE

PROJECT INFORMATION

PROGRAM		
PROJECT MANAGER		
DESIGNER		
CONSULTANT		
PROJECT RESIDENT		
CONTRACTOR		
PROJECT COMPLETION DATE		

PIN 17530.00

MINOT
ROUTE 119

TITLE SHEET

SHEET NUMBER
1
OF 13

Filename: ...\00\HIGHWAY\MSTA\001_Title.dgn Division: HIGHWAY Username: Christopher.Gallant Date:3/9/2011

ROUTE 119
CONSTRUCT EXISTING SHOULDERS
4" HOT MIX ASPHALT

STA. 1+00 TO STA. 1+76.43
STA. 4+35 TO STA. 5+00

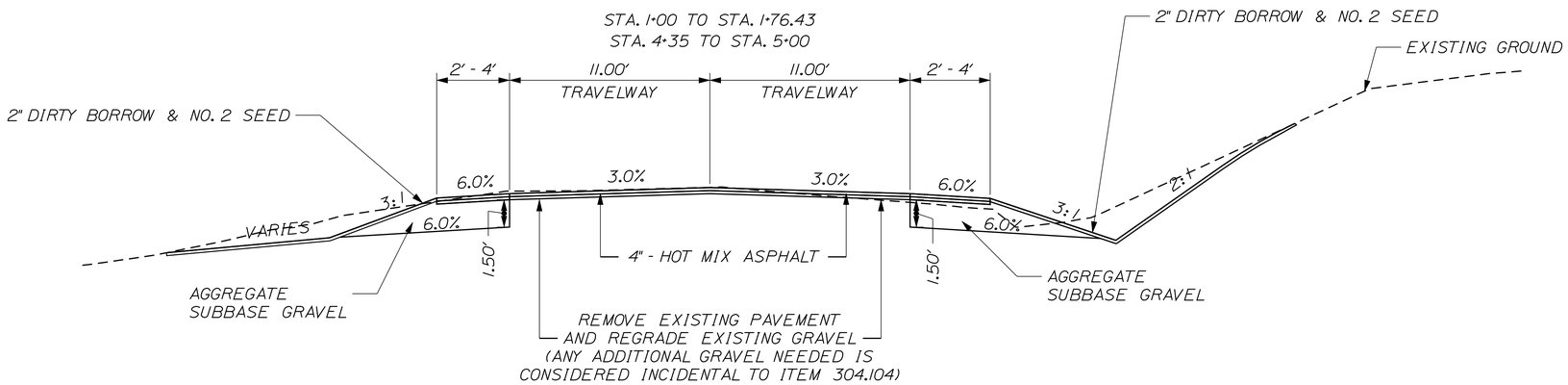

ROUTE 119
CONSTRUCT RT. SHOULDER / REGRADE VERRILL RD
4" HOT MIX ASPHALT

STA. 1+76.43 TO STA. 2+37.5

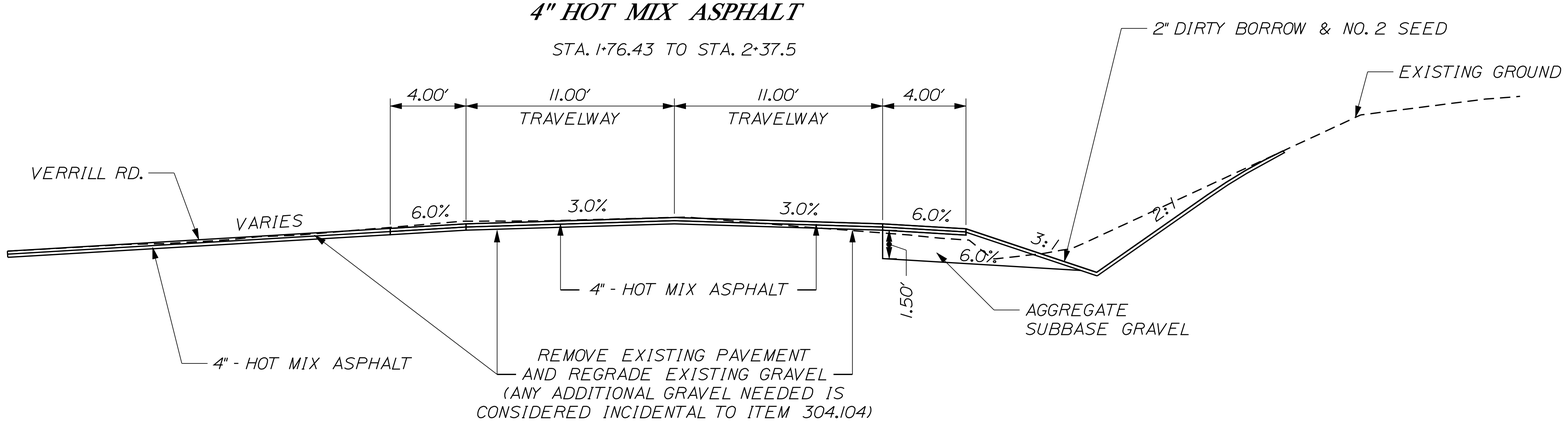

ROUTE 119
CONSTRUCT RT. SHOULDER / REGRADE VERRILL RD
4" HOT MIX ASPHALT

STA. 2+37.5 TO STA. 2+97.5

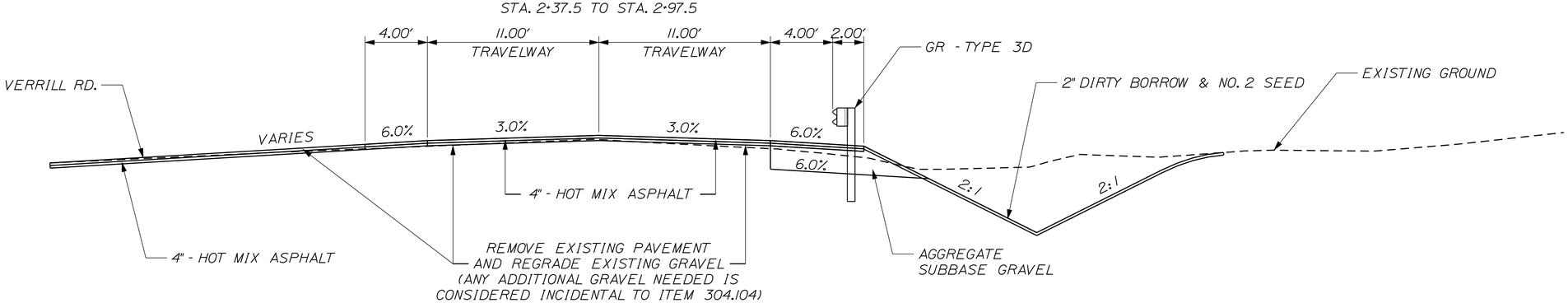

NOT TO SCALE

NOTE:

1. THE PAVEMENT, BASE AND SUBBASE DEPTHS AS SHOWN ON THE PLANS ARE INTENDED TO BE NOMINAL.

2. WHEN SUPERELEVATION EXCEEDS THE SLOPE OF THE LOW SIDE SHOULDER, THE LOW SIDE SHOULDER SHALL HAVE THE SAME SLOPE AS THE TRAVELWAY.

3. CROWNS FOR BOTH NORMAL AND SUPERELEVATION SECTIONS FOR ALL COURSES OF SUBBASE AND PAVEMENT SHALL BE STRAIGHT.

4. THE ALGEBRAIC DIFFERENCE BETWEEN THE SHOULDER AND TRAVEWAY CROSS SLOPES "ROLLOVER" SHALL NOT EXCEED 8%.

5. THE STATIONING SHOWN UNDER EACH TYPICAL IS APPROXIMATE.

STATE OF MAINE
DEPARTMENT OF TRANSPORTATION

17530.00

PIN 17530.00

HIGHWAY PLANS

	BY	DATE
PROJ. MANAGER	R. HOUGH	
DESIGN-DETAILED	C. GALLANT	OCT. 2010
CHECKED-REVIEWED		
DESIGN2-DETAILED2		
DESIGN3-DETAILED3		
REVISIONS 1		
REVISIONS 2		
REVISIONS 3		
REVISIONS 4		
FIELD CHANGES		

SIGNATURE

P.E. NUMBER

DATE

MINOT
RTE 119 STRUT REPLACEMENT

TYPICAL SECTIONS

SHEET NUMBER
2
OF 13

Filename: ...\highway\msta\002_Typical.dgn Division: HIGHWAY Username: michael.lenko Date:3/9/2011
48.34

ROUTE 119
CONSTRUCT EXISTING SHOULDERS
4" HOT MIX ASPHALT

STA. 2+97.5 TO STA. 3+22.67
STA. 3+35 TO 3+87.5

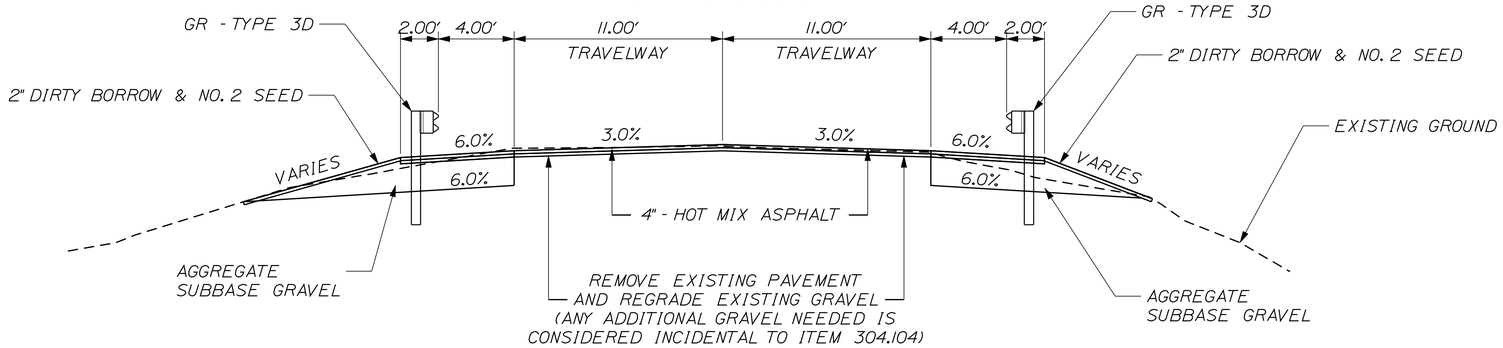

ROUTE 119
STRUT REPLACEMENT PAY LIMITS
4" HOT MIX ASPHALT

STA. 3+22.67 TO STA. 3+35

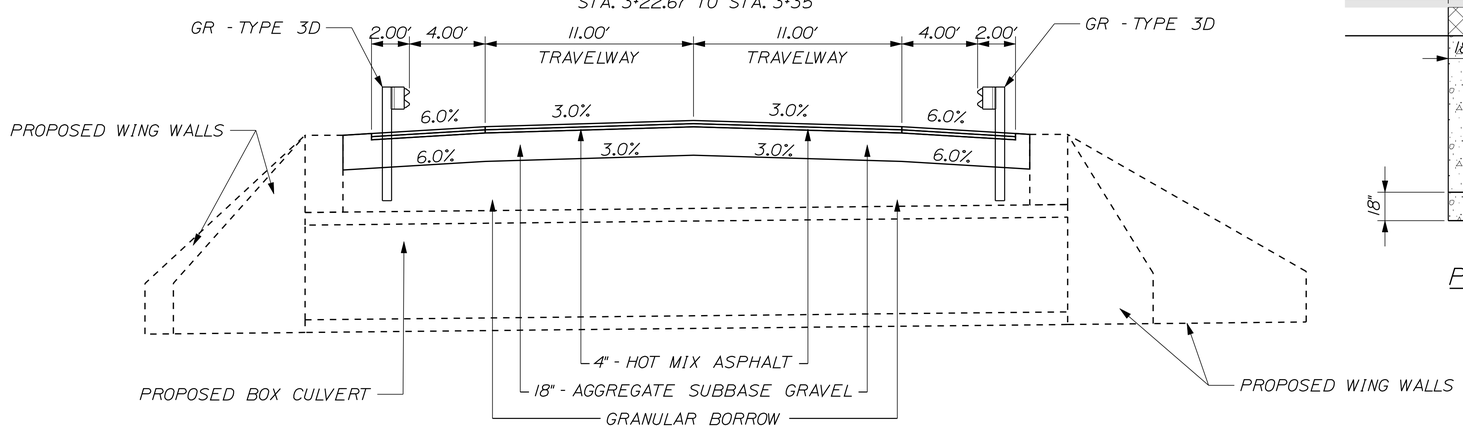

ROUTE 119
CONSTRUCT EXISTING SHOULDERS
4" HOT MIX ASPHALT

STA. 3+87.5 TO STA. 4+35

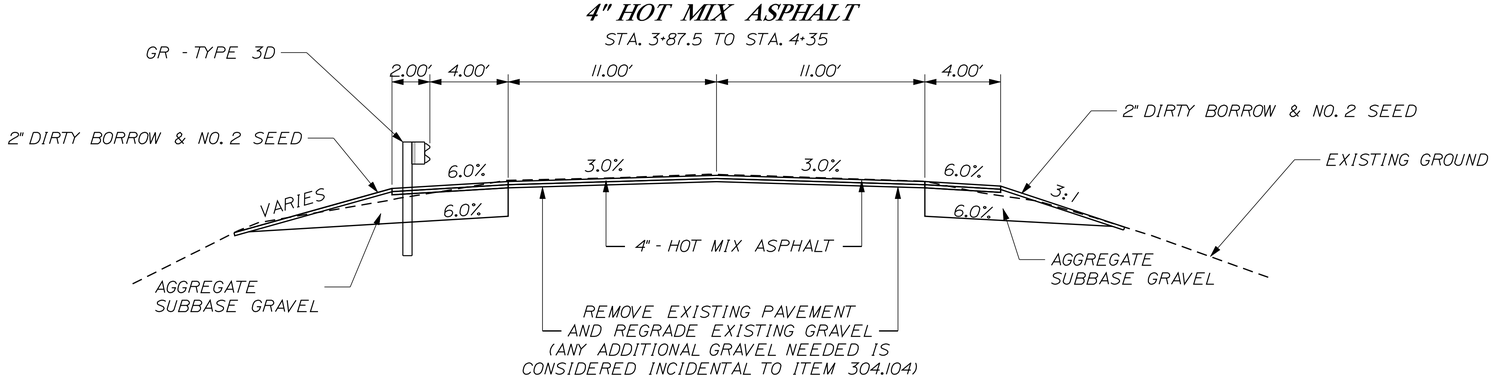

NOTE:

1. THE PAVEMENT, BASE AND SUBBASE DEPTHS AS SHOWN ON THE PLANS ARE INTENDED TO BE NOMINAL.

2. WHEN SUPERELEVATION EXCEEDS THE SLOPE OF THE LOW SIDE SHOULDER, THE LOW SIDE SHOULDER SHALL HAVE THE SAME SLOPE AS THE TRAVELWAY.

3. CROWNS FOR BOTH NORMAL AND SUPERELEVATION SECTIONS FOR ALL COURSES OF SUBBASE AND PAVEMENT SHALL BE STRAIGHT.

4. THE ALGEBRAIC DIFFERENCE BETWEEN THE SHOULDER AND TRAVEWAY CROSS SLOPES "ROLLOVER" SHALL NOT EXCEED 8%.

5. THE STATIONING SHOWN UNDER EACH TYPICAL IS APPROXIMATE.

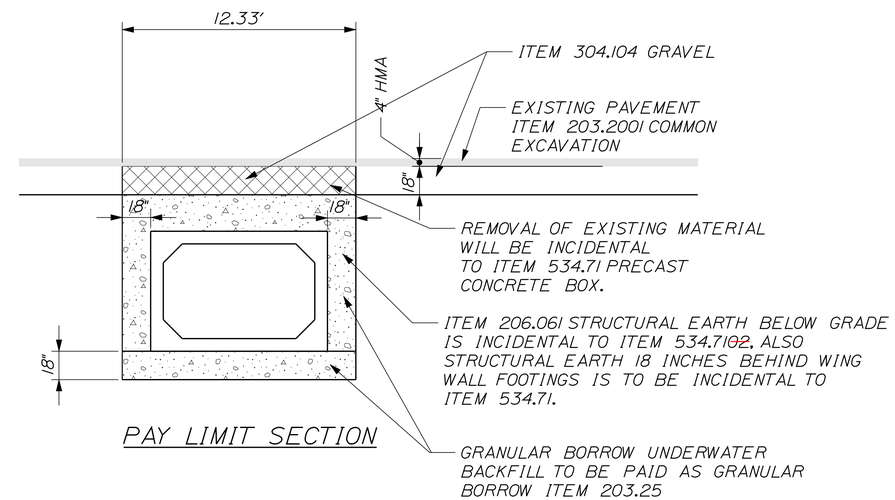

PAY LIMIT SECTION

NOT TO SCALE

STATE OF MAINE
DEPARTMENT OF TRANSPORTATION

17530.00

PIN 17530.00

HIGHWAY PLANS

	BY	DATE
PROJ. MANAGER	R. HOUGH	
DESIGN-DETAILED	C. GALLANT	OCT. 2010
CHECKED-REVIEWED		
DESIGN2-DETAILED2		
DESIGN3-DETAILED3		
REVISIONS 1		
REVISIONS 2		
REVISIONS 3		
REVISIONS 4		
FIELD CHANGES		

SIGNATURE

P.E. NUMBER

DATE

MINOT
RTE 119 STRUT REPLACEMENT

TYPICAL SECTIONS

SHEET NUMBER
3
OF 13

Filename: ...\highway\rnsta\003_Typical.dgn Division: HIGHWAY Username: michael.lenko Date:3/9/2011

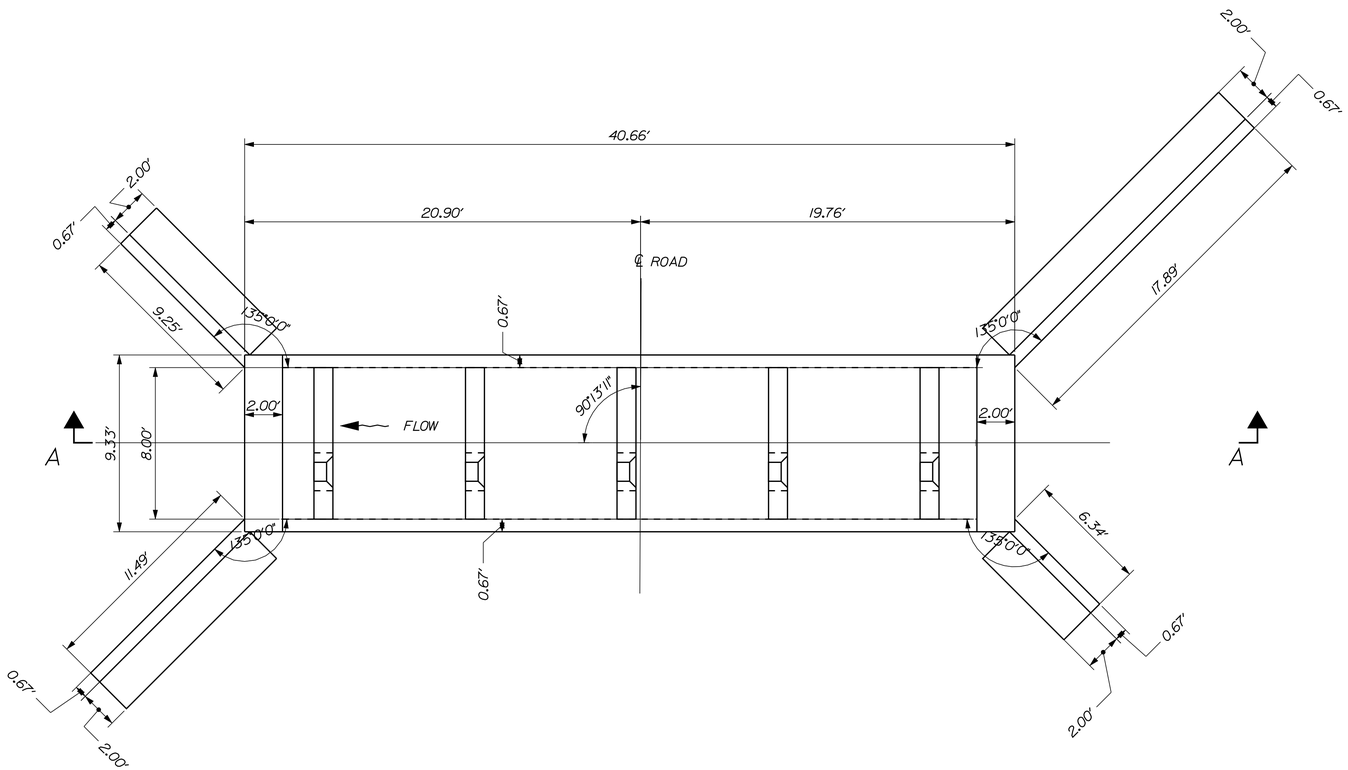

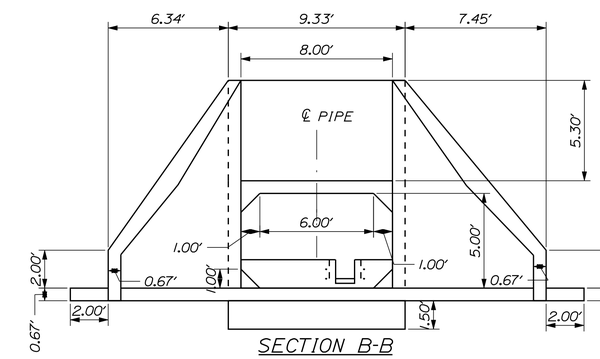

SECTION B-B

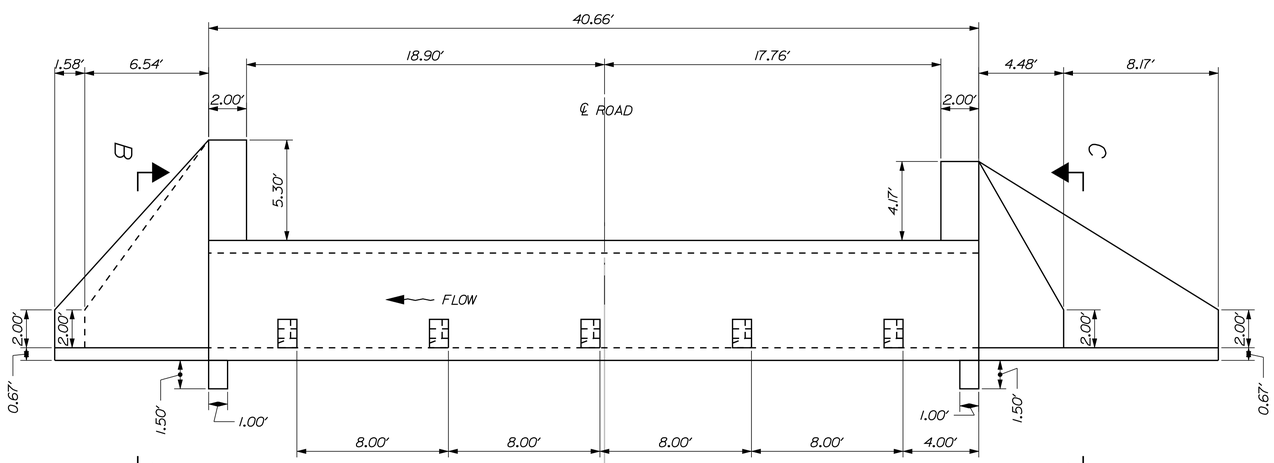

SECTION A-A

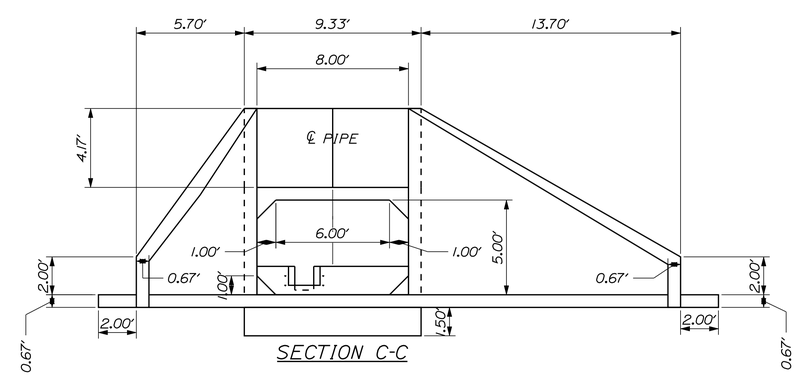

SECTION C-C

NOT TO SCALE

STATE OF MAINE
DEPARTMENT OF TRANSPORTATION

17530.00

PIN
17530.00

HIGHWAY PLANS

PROJ. MANAGER	R. HOUGH	BY	DATE
DESIGN-DETAILED	C. GALLANT	-----	OCT. 2010
CHECKED-REVIEWED	-----	-----	-----
DESIGN2-DETAILED2	-----	-----	-----
DESIGN3-DETAILED3	-----	-----	-----
REVISIONS 1	-----	-----	-----
REVISIONS 2	-----	-----	-----
REVISIONS 3	-----	-----	-----
REVISIONS 4	-----	-----	-----
FIELD CHANGES	-----	-----	-----

SIGNATURE

P.E. NUMBER

DATE

MINOT
RTE 119 STRUT REPLACEMENT

PLANS

SHEET NUMBER

4

OF 13

Filename: ...\msta\004_Box Typical.dgn Division: HIGHWAY Username: michael.lenko Date:3/9/2011

FISH WEIR TYPICAL

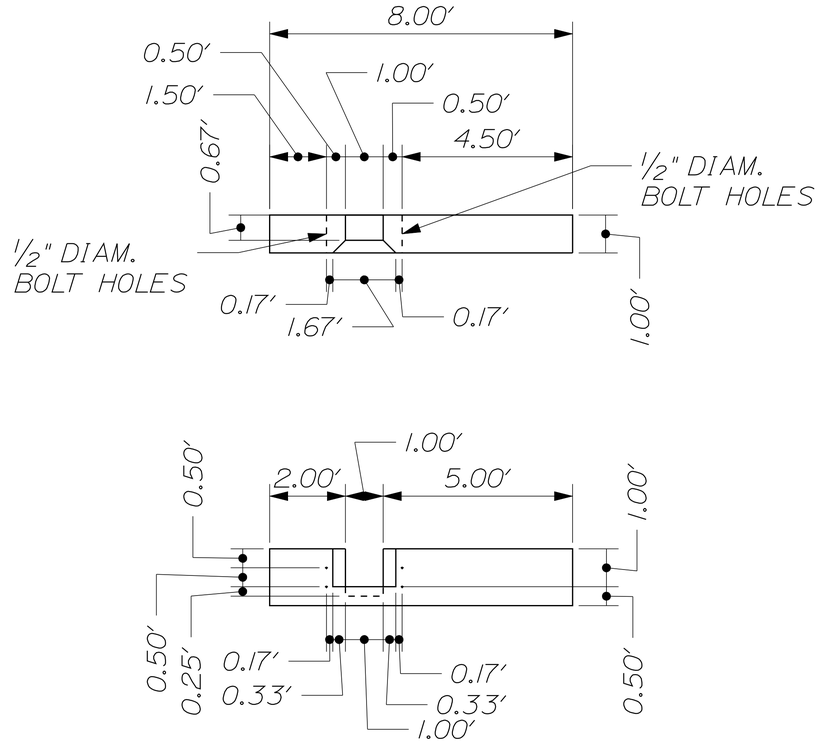

NOTE:

1. WEIRS TO BE ATTACHED TO PRECAST STRUCTURE DURING MANUFACTURING.

2. WEIRS SHALL BE MANUFACTURED WITH HOLES PROPERLY SIZED WEIR PLATE BOLTS.

3. WEIR PLATES SHALL BE MANUFACTURED FROM 1" THICK PLASTIC WITH HOLES PREDRILLED.

4. CONTRACTOR SHALL PROVIDE (5) PLASTIC WEIR PLATES, (20) 3/8 " X 18" STAINLESS STEEL BOLTS, AND (40) STAINLESS STEAL WASHERS AND LOCK BOLTS.

5. ALL MATERIALS SHALL BE DELIVERED WITH THE CONCRETE STRUCTURE. THE DEPARTMENT WILL INSTALL WEIR PLATES AT LATER DATE.

WEIR PLATE TYPICAL

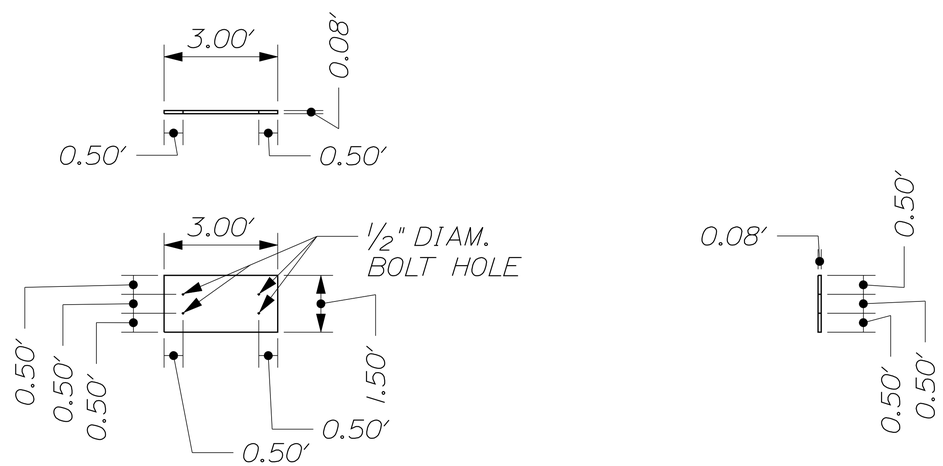

STATE OF MAINE
DEPARTMENT OF TRANSPORTATION

17530.00

PIN
17530.00

HIGHWAY PLANS

PROJ. MANAGER	R. HOUGH	BY	DATE
DESIGN-DETAILED	C. GALLANT	------	OCT. 2010
CHECKED-REVIEWED	-----	------	------
DESIGN2-DETAILED2	------	------	------
DESIGN3-DETAILED3	------	------	------
REVISIONS 1	------	------	------
REVISIONS 2	------	------	------
REVISIONS 3	------	------	------
REVISIONS 4	------	------	------
FIELD CHANGES	------	------	------

SIGNATURE

P.E. NUMBER

DATE

MINOT
RTE 119 STRUT REPLACEMENT

PLANS

SHEET NUMBER

5

OF 13

Filename: ...\msta\005_Weir Typical.dgn Division: HIGHWAY Username: michael.lenko Date:3/9/2011

GENERAL NOTES

1. THE UTILITIES INVOLVED IN THIS CONTRACT ARE AS FOLLOWS:

CMP
FAIRPOINT
TIME WARNER CABLE

2. ALL UTILITY FACILITIES SHALL BE ADJUSTED BY THE RESPECTIVE UTILITIES UNLESS OTHERWISE NOTED.

3. ALL INSLOPE AND DITCHES IN CUT AREAS SHALL BE GRADED AS SHOWN ON THE TYPICALS OR FLATTER, OR AS DIRECTED BY THE RESIDENT.

4. WHERE NO DITCHING OR INSLOPE EXCAVATION IS NEEDED, THE GRADING OF EXISTING MATERIAL OR THE ADDITION OF MATERIAL FOR 3 FEET BEYOND SHOULDER BREAK TO MATCH THE EXISTING SLOPE SHALL BE INCIDENTAL TO THE CONTRACT.

5. DRIVEWAY FILL SIDE SLOPES SHALL BE 3:1 UNLESS OTHERWISE NOTED ON THE PLANS.

6. ALL WASTE MATERIAL NOT USED ON THE PROJECT SHALL BE DISPOSED OF OFF THE PROJECT IN WASTE AREAS APPROVED. ALL GRADING, SEEDING, AND MULCHING OF WASTE AREA SHALL BE CONSIDERED INCIDENTAL TO THE CONTRACT.

7. IF THE RESIDENT DETERMINES THAT FOUNDATION MATERIAL IS REQUIRED UNDER CULVERTS, IT SHALL MEET THE REQUIREMENTS FOR GRANULAR BORROW - UNDERWATER BACKFILL AND WILL BE PAID FOR AS GRANULAR BORROW ITEM 203.25.

8. RESIDENTIAL PAVED ENTRANCES SHALL BE CONSTRUCTED WITH: 2" HOT MIX ASPHALT AND 12" AGGREGATE SUBBASE COURSE GRAVEL.

9. UNPAVED ENTRANCES SHALL BE CONSTRUCTED WITH 14" AGGREGATE SUBBASE COURSE GRAVEL.

10. A 3' PAVED LIP SHALL BE PLACED AT ALL GRAVEL ENTRANCES.

11. NO EXISTING DRAINAGE SHALL BE ABANDONED, REMOVED OR PLUGGED WITHOUT PRIOR APPROVAL OF THE RESIDENT.

12. INLETS AND OUTLETS OF ALL CULVERTS SHALL BE RIPRAPPED UNLESS OTHERWISE NOTED ON THE PLANS OR DIRECTED BY THE RESIDENT.

13. GUARDRAIL END TREATMENTS SHALL BE INSTALLED CONCURRENTLY WITH THE PLACEMENT OF EACH SECTION OF BEAM GUARDRAIL.

14. ITEM 606.353 REFLECTORIZED GUARDRAIL MARKERS WILL BE PLACED TWO AT THE TRAILING END AND TWO AT THE LEADING END FOR EACH RUN OF GUARDRAIL.

15. DIRTY BORROW HAS BEEN ESTIMATED FOR DISTURBED LAWN AREAS. ACTUAL PLACEMENT OF THE DIRTY BORROW SHALL BE AS NOTED ON THE PLANS OR DESIGNATED BY THE RESIDENT.

16. THE CONTRACTOR WILL BE RESPONSIBLE FOR MAINTAINING ALL EXISTING MAILBOXES TO ENSURE THAT THE MAIL WILL BE DELIVERABLE. NO SEPARATE PAYMENT WILL BE MADE FOR THIS WORK; IT SHALL BE CONSIDERED INCIDENTAL TO THE CONTRACT.

17. ANY DAMAGE TO THE SLOPES CAUSED BY THE CONTRACTOR'S EQUIPMENT, PERSONNEL, OR OPERATION SHALL BE REPAIRED TO THE SATISFACTION OF THE RESIDENT. ALL WORK, EQUIPMENT, AND MATERIALS REQUIRED TO MAKE REPAIRS SHALL BE AT THE CONTRACTOR'S EXPENSE.

18. THE FILL QUANTITY SHOWN ON THE CROSS SECTIONS INCLUDES THE WASTE STORAGE.

19. AREAS REQUIRING FILL ON THE PROJECT WILL COME FROM SUITABLE EXCAVATION FROM EXCAVATION AREAS.

20. NO SEPARATE PAYMENT FOR SUPERINTENDENT OR FOREMAN WILL BE MADE FOR THE SUPERVISION OF EQUIPMENT BEING PAID FOR UNDER THE EQUIPMENT RENTAL ITEMS.

21. ALL WORK SHALL BE DONE IN ACCORDANCE WITH THE MAINE DEPARTMENT OF TRANSPORTATION'S BEST MANAGEMENT PRACTICES FOR EROSION CONTROL & SEDIMENT CONTROL FEBRUARY, 2008, ALSO WITHIN THE INSTREAM WORK WINDOW 7/15 TO 9/30.

22. DURING CONSTRUCTION, THE CONTRACTOR WILL BE RESPONSIBLE FOR MAINTAINING ONE LANE OF TRAFFIC AT ALL TIMES. TEMPORARY TRAFFIC SIGNALS WILL BE REQUIRED AND PAID FOR UNDER ITEM 643.72.

23. ALL COSTS FOR EXCAVATING AND REMOVING EXISTING BOX CULVERT WILL BE INCIDENTAL TO THE CONTRACT.

24. ESTIMATED QUANTITIES FOR REQUIRED STRUCTURAL EARTH EXCAVATION, DRAINAGE AND MINOR STRUCTURES ARE INFORMATIONAL ONLY AND REPRESENT THE APPROXIMATE MINIMUM QUANTITY REQUIRED TO INSTALL DRAINAGE STRUCTURES. ADDITIONAL EXCAVATION FOR THE CONTRACTOR'S CONVENIENCE OR TO COMPLY WITH BACKSLOPING REQUIREMENTS WILL NOT BE PAID FOR DIRECTLY BUT WILL BE CONSIDERED INCIDENTAL TO THE RELATED DRAINAGE ITEMS.

25. EXCAVATIONS ACCOMPLISHED AS PART OF THIS PROJECT SHALL BE CONSTRUCTED IN ACCORDANCE WITH SUBPART P OF 29 CFR PART 1926.650-.652 (CONSTRUCTION STANDARD FOR EXCAVATIONS).

26. ALL COST FOR REMOVING EXISTING DRAINAGE ITEMS WILL BE CONSIDERED INCIDENTAL TO THE CONTRACT.

27. ALL PAVEMENT REMOVAL SHALL BE CONSIDERED INCIDENTAL TO ITEM 203.2001.

28. ANY CLEARING SHALL BE CONSIDERED INCIDENTAL TO THE CONTRACT.

CONSTRUCTION NOTES

201.23 REMOVING SINGLE TREE TOP ONLY

Station	Side	Size
4+12.8	Rt.	16"
4+52.5	Rt.	12"
4+70.7	Rt.	16"

201.23 REMOVING STUMP

Station	Side	Size
4+12.8	Rt.	16"
4+52.5	Rt.	12"
4+70.7	Rt.	16"

527.303 ET-PLUS

Station	Station	Side
3+97.5	4+35	Lt.
4+25	4+62.5	Rt.

603.17 18" CULVERT PIPE OPTION 1

Station	Station	Side
1+89.6	2+37.6	Rt.

606.24 GR TYPE 3D - SINGLE RAIL

Station	Station	Side
2+37.5	4+25	Rt.
2+97.5	3+97.5	Lt.

606.242 GR TYPE 3D - OVER 15' RADIUS

Station	Station	Side	Length
2+30.4	2+37.5	Rt.	12.5'
2+83.6	2+97.5	Lt.	25'

606.265 TERM END - SINGLE RAIL

Station	Side
2+30.4	Rt.
2+83.6	Lt.

STATE OF MAINE
DEPARTMENT OF TRANSPORTATION

17530.00

PIN 17530.00

HIGHWAY PLANS

		BY	DATE
PROJ. MANAGER	R. HOUGH		
DESIGN-DETAILED	C. GALLANT		OCT. 2010
CHECKED-REVIEWED			
DESIGN2-DETAILED2			
DESIGN3-DETAILED3			
REVISIONS 1			
REVISIONS 2			
REVISIONS 3			
REVISIONS 4			
FIELD CHANGES			

SIGNATURE

P.E. NUMBER

DATE

MINOT
RTE 119 STRUT REPLACEMENT

GENERAL NOTES

SHEET NUMBER
6
OF 13

Filename: ...\msta\006_GeneralNotes.dgn Division: HIGHWAY Username: michael.lenko Date:3/9/2011

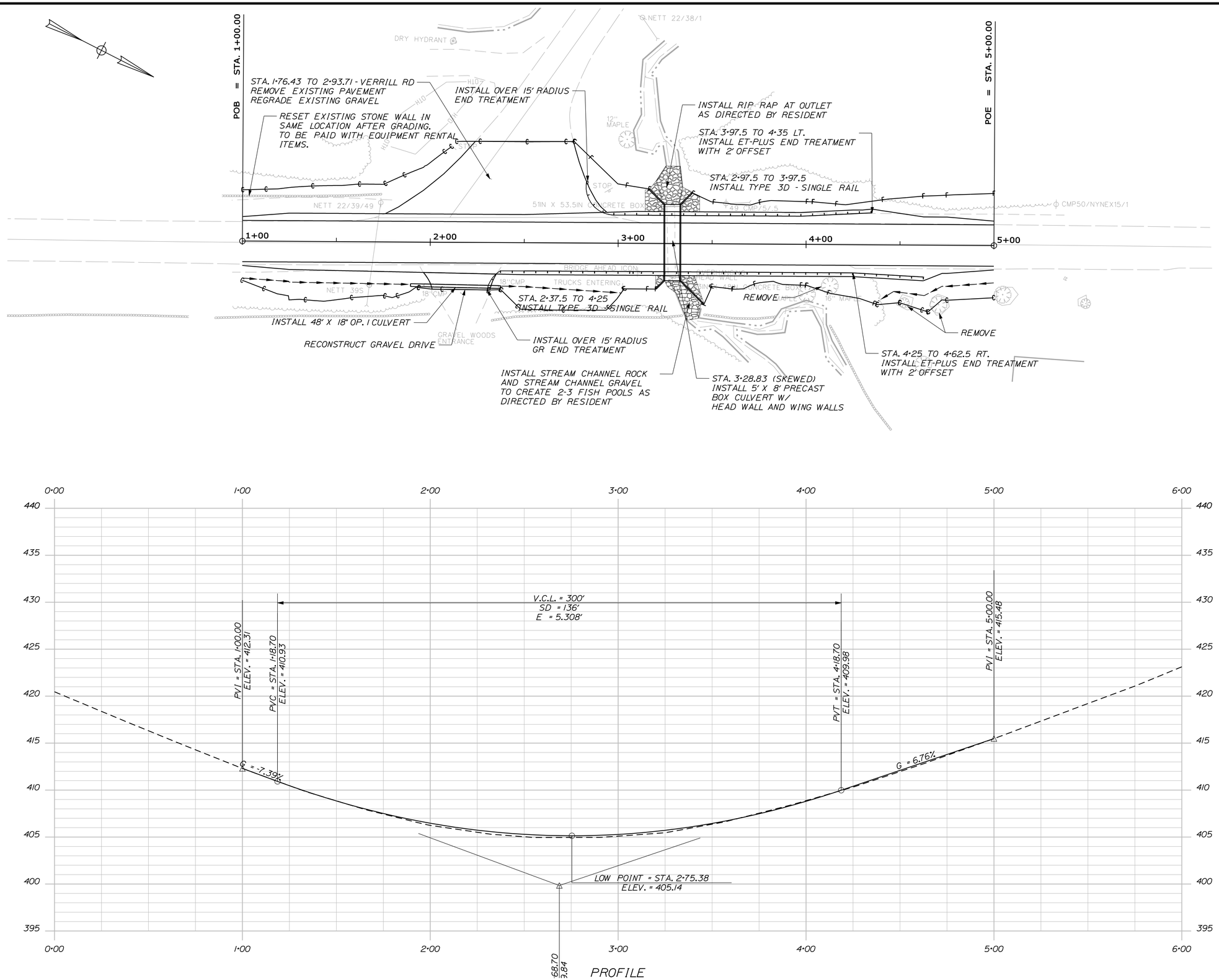

STA. 0+00.00 TO STA. 6+00.00

STATE OF MAINE
DEPARTMENT OF TRANSPORTATION

17530.00

PIN 17530.00

HIGHWAY PLANS

PROJ. MANAGER	R. HOUGH	BY	DATE
DESIGN-DETAILED	C. GALLANT	------	OCT 2010
CHECKED-REVIEWED	------	------	------
DESIGN2-DETAILED2	------	------	------
DESIGN3-DETAILED3	------	------	------
REVISIONS 1	------	------	------
REVISIONS 2	------	------	------
REVISIONS 3	------	------	------
REVISIONS 4	------	------	------
FIELD CHANGES	------	------	------

SIGNATURE

P.E. NUMBER

DATE

MINOT
RTE 119 STRUT REPLACEMENT

PLANS

SHEET NUMBER

7

OF 13

Filename: ...\highway\rmsla\007_HDPLAN1.DGN Division: HIGHWAY Username: michael.lenko Date:3/9/2011

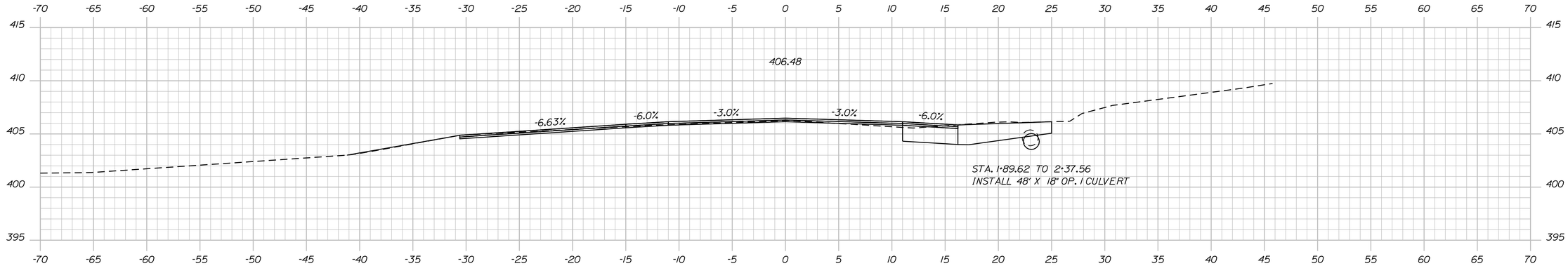

2+00.00

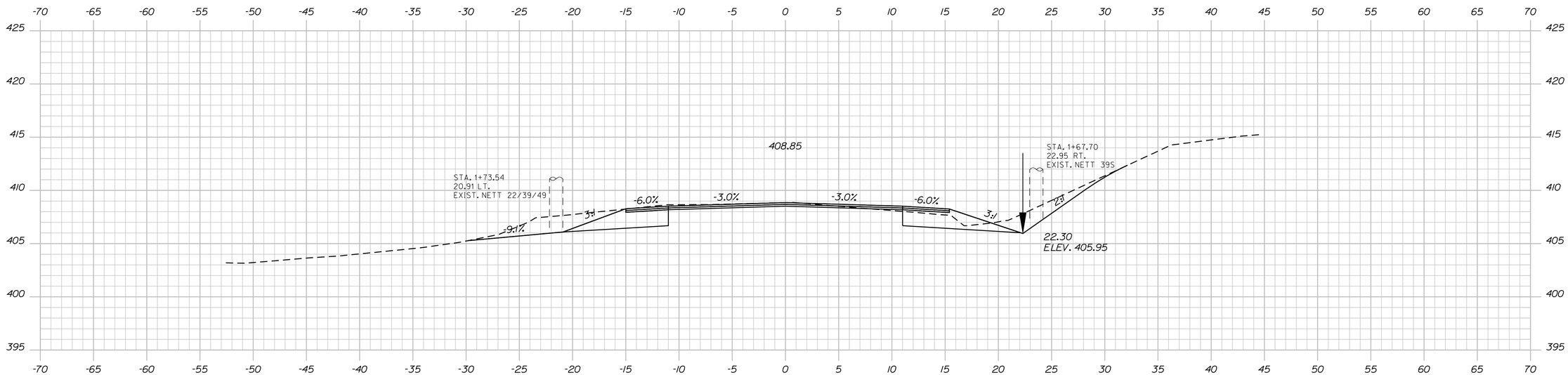

1+50.00

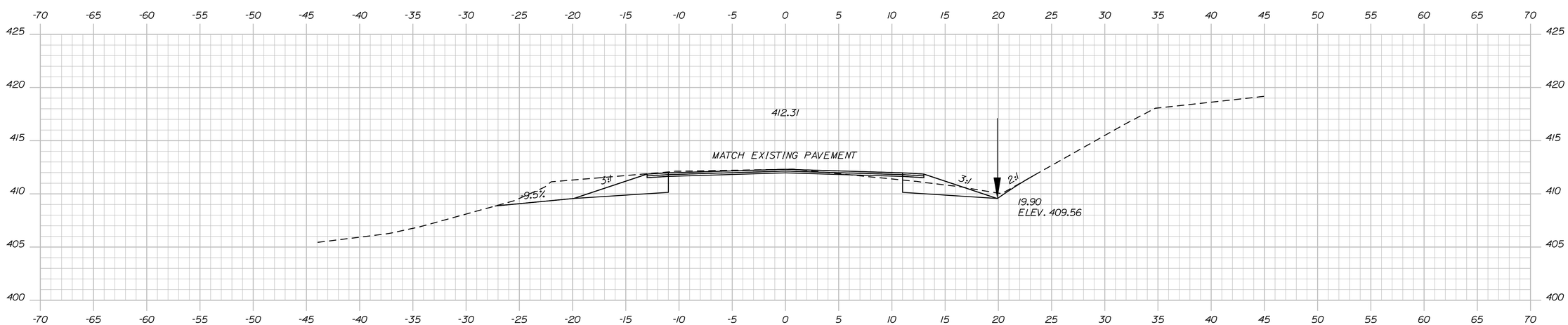

1+00.00

STATE OF MAINE
DEPARTMENT OF TRANSPORTATION

17530.00

PIN
17530.00

HIGHWAY PLANS

PROJ. MANAGER	R. HOUGH	BY	DATE
DESIGN-DETAILED	C. GALLANT	----	OCT. 2010
CHECKED-REVIEWED	----	----	----
DESIGN2-DETAILED2	----	----	----
DESIGN3-DETAILED3	----	----	----
REVISIONS 1	----	----	----
REVISIONS 2	----	----	----
REVISIONS 3	----	----	----
REVISIONS 4	----	----	----
FIELD CHANGES	----	----	----

SIGNATURE

P.E. NUMBER

DATE

MINOT
RTE 119 STRUT REPLACEMENT

CROSS SECTIONS

SHEET NUMBER

8

OF 13

Filename: ...\msta\008_Xsect_1+00_001.dgn Division: HIGHWAY Username: michael.lenko Date:3/9/2011

Sta. 1+00.00 to Sta. 2+00.00

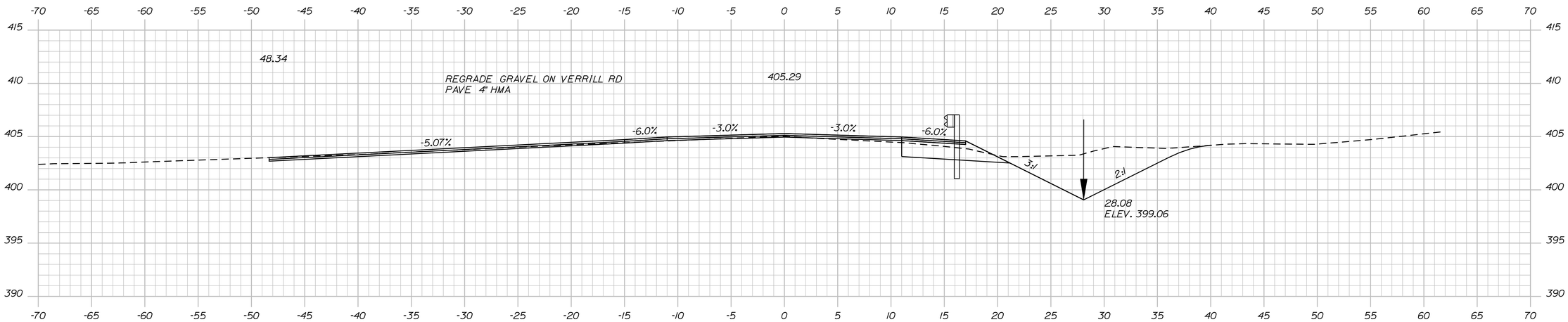

2+50.00

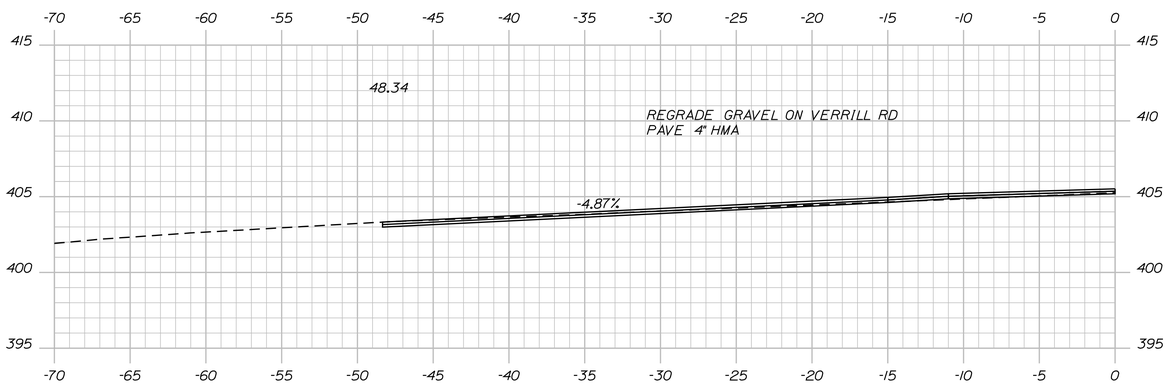

2+35.14

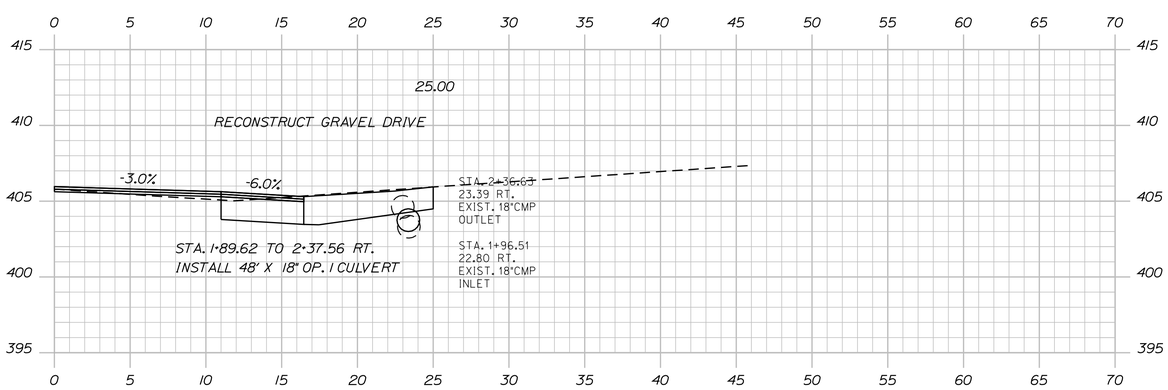

2+16.37

STATE OF MAINE
DEPARTMENT OF TRANSPORTATION

17530.00

PIN
17530.00

HIGHWAY PLANS

	BY	DATE
PROJ. MANAGER	R. HOUGH	
DESIGN-DETAILED	C. CALLANT	OCT 2010
CHECKED-REVIEWED		
DESIGN2-DETAILED2		
DESIGN3-DETAILED3		
REVISIONS 1		
REVISIONS 2		
REVISIONS 3		
REVISIONS 4		
FIELD CHANGES		

SIGNATURE

P.E. NUMBER

DATE

MINOT
RTE 119 STRUT REPLACEMENT

CROSS SECTIONS

SHEET NUMBER
9
OF 13

Filename: ...\msto\009_Xsect_2+16_002.dgn Division: HIGHWAY Username: michael.lenko Date:3/9/2011

Sta. 2+16.37 to Sta. 2+50.00

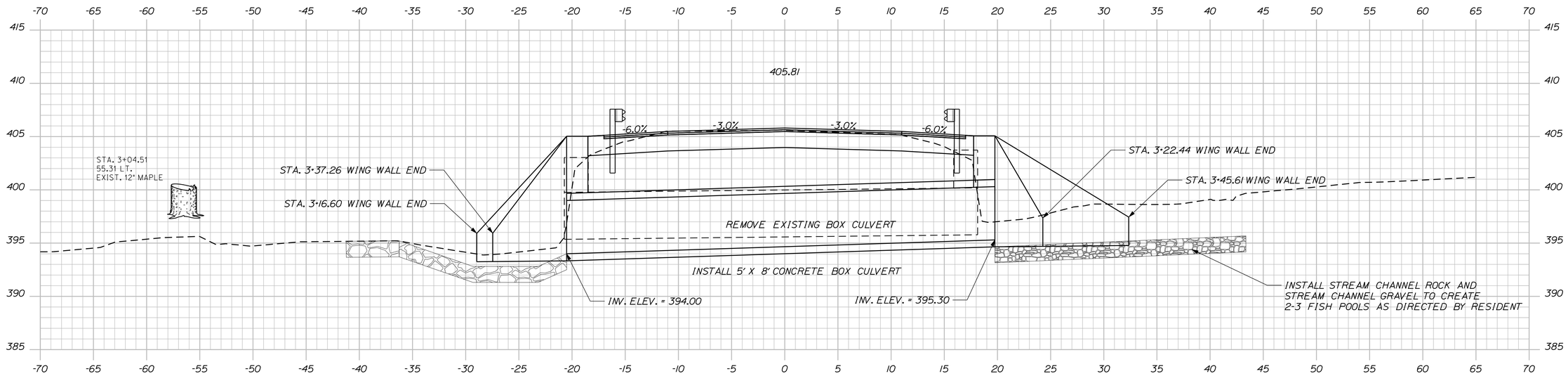

3+28.83

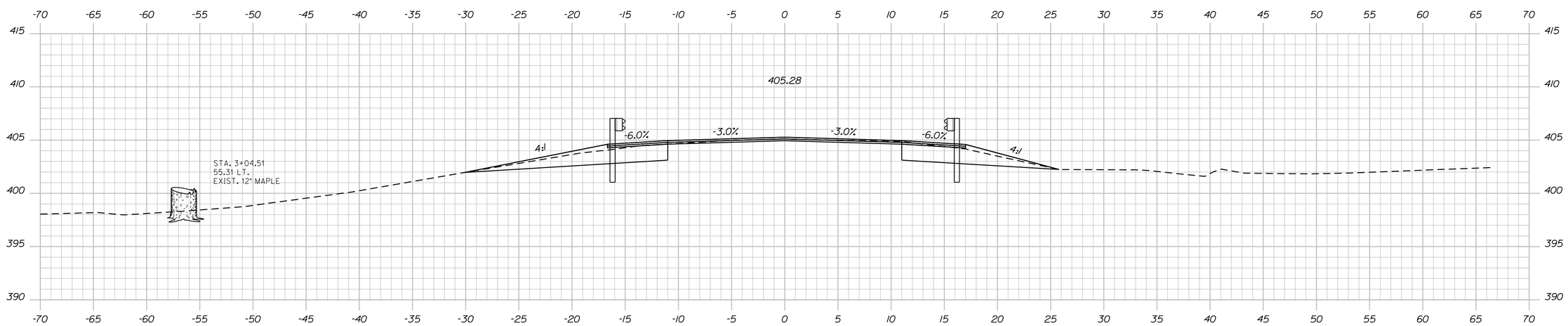

3+00.00

STATE OF MAINE
DEPARTMENT OF TRANSPORTATION

17530.00

PIN
17530.00

HIGHWAY PLANS

PROJ. MANAGER	R. HOUGH	BY	DATE
DESIGN-DETAILED	C. CALLANT		OCT. 2010
CHECKED-REVIEWED			
DESIGN2-DETAILED2			
DESIGN3-DETAILED3			
REVISIONS 1			
REVISIONS 2			
REVISIONS 3			
REVISIONS 4			
FIELD CHANGES			

SIGNATURE

P.E. NUMBER

DATE

MINOT
RTE 119 STRUT REPLACEMENT

CROSS SECTIONS

SHEET NUMBER
10
OF 13

Sta. 3+00.00 to Sta. 3+28.83

Filename: ...\mnsto\010_Xsect_3+00_003.dgn Division: HIGHWAY Username: michael.lenko Date:3/9/2011

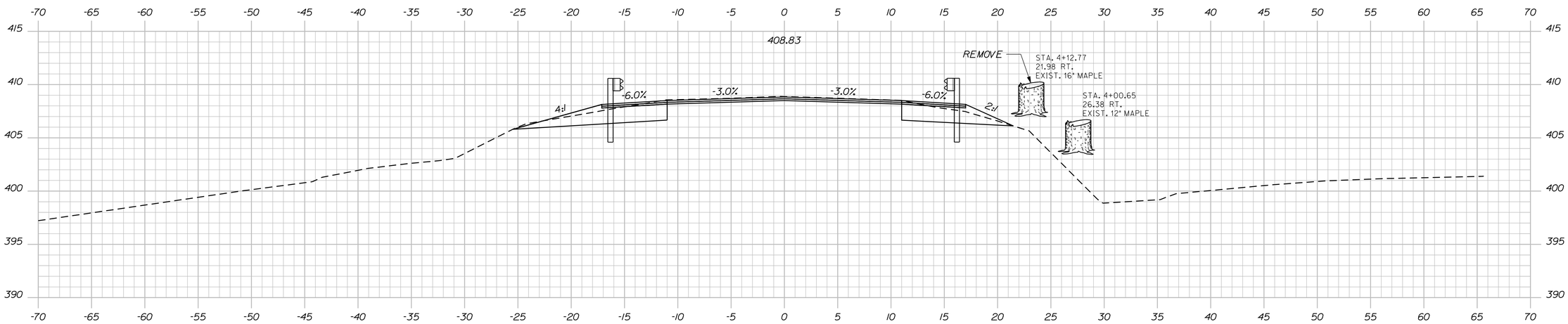

4+00.00

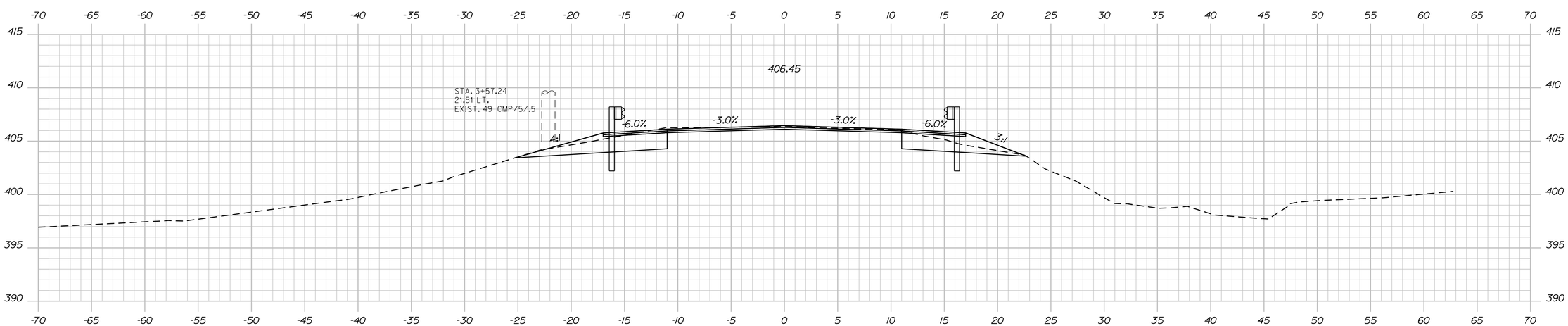

3+50.00

STATE OF MAINE
DEPARTMENT OF TRANSPORTATION

17530.00

PIN
17530.00

HIGHWAY PLANS

		BY	DATE
PROJ. MANAGER	R. HOUGH		
DESIGN-DETAILED	C. GALLANT		OCT 2010
CHECKED-REVIEWED			
DESIGN2-DETAILED2			
DESIGN3-DETAILED3			
REVISIONS 1			
REVISIONS 2			
REVISIONS 3			
REVISIONS 4			
FIELD CHANGES			

SIGNATURE

P.E. NUMBER

DATE

MINOT
RTE 119 STRUT REPLACEMENT

CROSS SECTIONS

SHEET NUMBER
11
OF 13

Sta. 3+50.00 to Sta. 4+00.00

Filename: ...\msta\011_Xsect_3-50_004.dgn Division: HIGHWAY Username: michael.lenko Date:3/9/2011

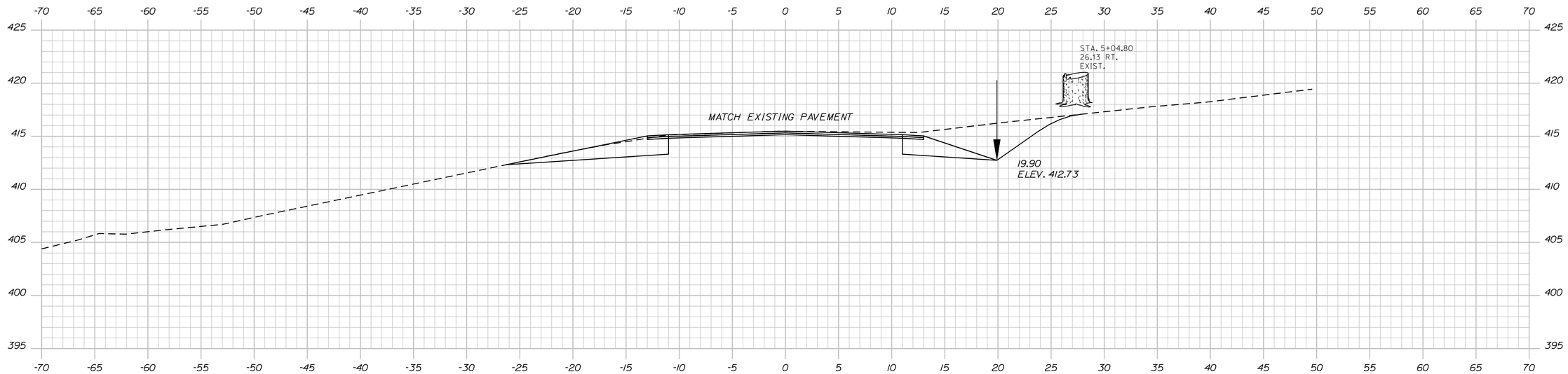

5+00.00

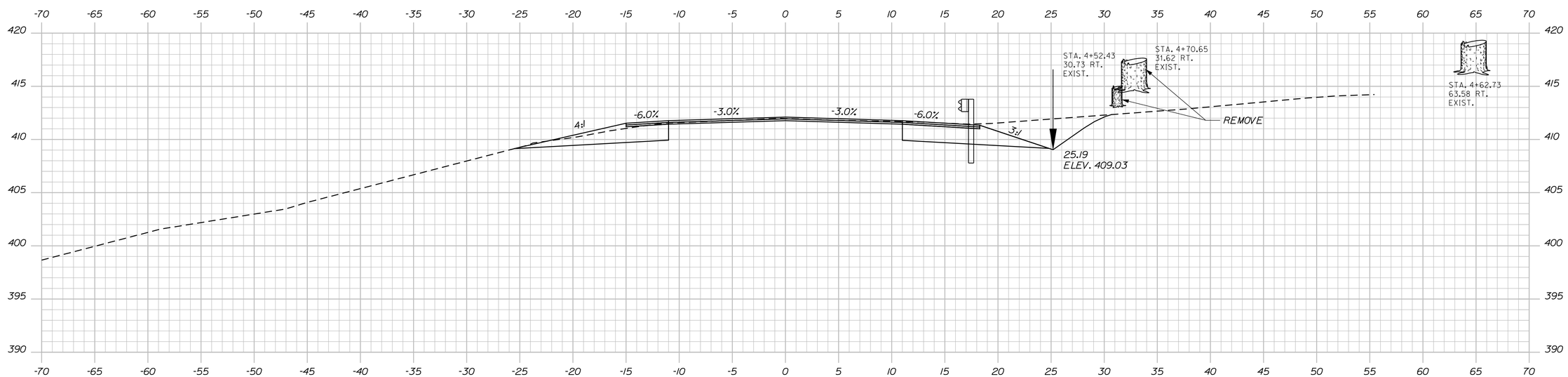

4+50.00

Sta. 4+50.00 to Sta. 5+00.00

STATE OF MAINE
DEPARTMENT OF TRANSPORTATION

17530.00

PIN
17530.00

HIGHWAY PLANS

PROJ. MANAGER	R. HOUGH	BY	DATE
DESIGN-DETAILED	C. GALLANT	------	OCT. 2010
CHECKED-REVIEWED	------	------	------
DESIGN2-DETAILED2	------	------	------
DESIGN3-DETAILED3	------	------	------
REVISIONS 1	------	------	------
REVISIONS 2	------	------	------
REVISIONS 3	------	------	------
REVISIONS 4	------	------	------
FIELD CHANGES	------	------	------

SIGNATURE

P.E. NUMBER

DATE

MINOT
RTE 119 STRUT REPLACEMENT

CROSS SECTIONS

SHEET NUMBER
12
OF 13

Filename: ...\msta\012_Xsect_4+50_005.dgn Division: HIGHWAY Username: michael.lenko Date:3/9/2011

CONTROL INFORMATION

HORIZONTAL DATUM - US STATE PLANE NAD83(1996)
ZONE - MAINE 2000 WEST ZONE
VERTICAL DATUM NAVD 88
COMBINED SCALE FACTOR - 0.9999607

GRID
MAINE 2000 WEST ZONE

DAVID TUFTS
ITEM NO. (1)
TEMP. CONST. RIGHTS = 911± S.F. (1)
TOTAL AREA = 5.6± AC. (PER TAX MAP)
TAX MAP/LOT- R2/39C

DAVID K. TUFTS
ITEM NO. (2)
CONST. AND MAINT. EASE. = 446± S.F. (1)
TOTAL AREA = 4.0± AC. (PER TAX MAP)
TAX MAP/LOT- R2/40A

RYAN L. GODDARD
MELANIE A. HARRINGTON
ITEM NO. (3)
CONST. & MAINT. EASE. = 472± S.F. (1)
TEMP. CONST. RIGHTS = 925± S.F. (1)
TOTAL AREA = 2.0± AC. (PER DEED)
TAX MAP/LOT- R2/40

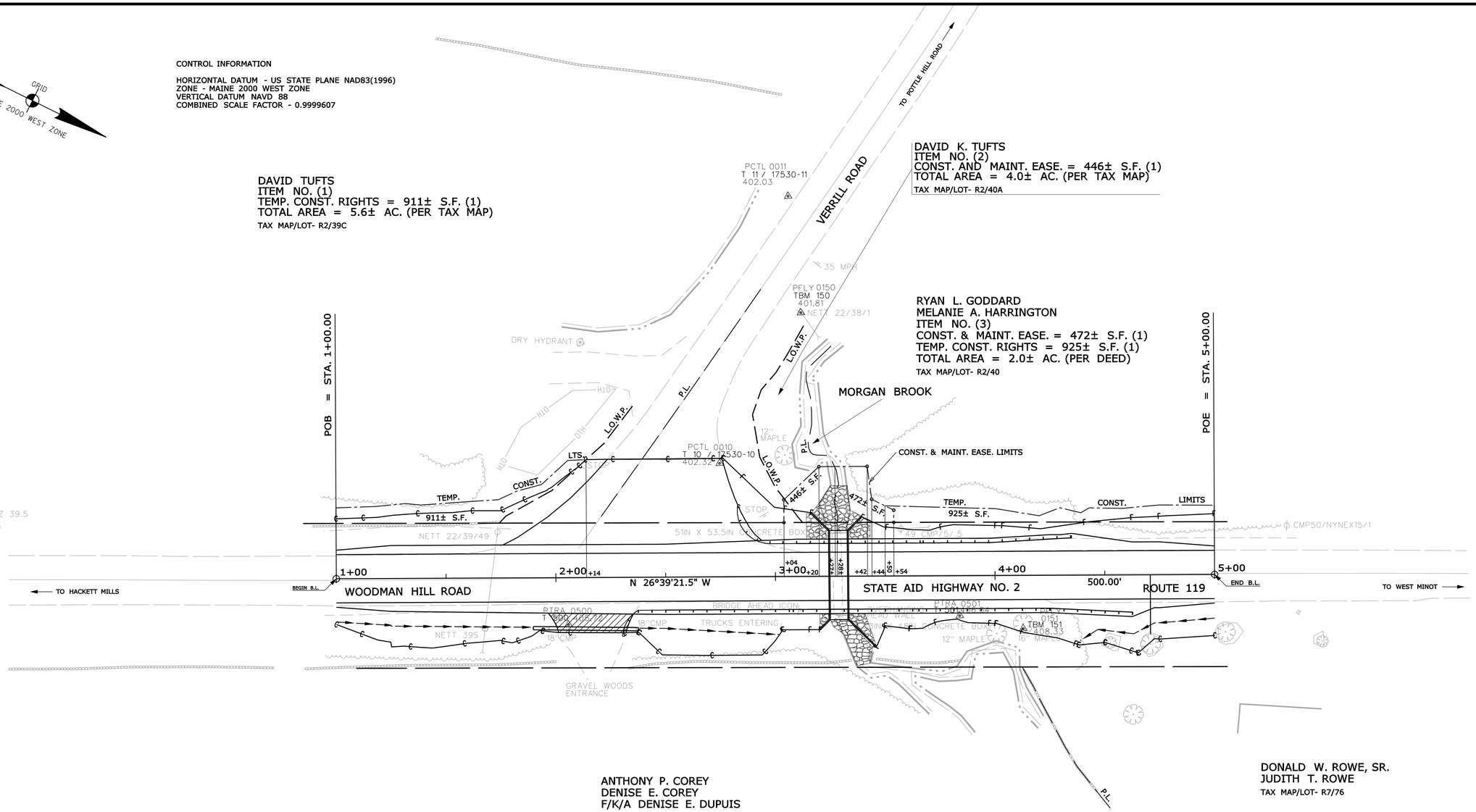

ANTHONY P. COREY
DENISE E. COREY
F/K/A DENISE E. DUPUIS
TAX MAP/LOT- R7/75

DONALD W. ROWE, SR.
JUDITH T. ROWE
TAX MAP/LOT- R7/76

EXISTING RIGHT OF WAY

ROUTE 119
A) CUMBERLAND COUNTY COMMISSIONERS RECORDS
VOLUME 2 PAGE 350
1793 4 & 6 RODS WIDE (66' & 99')

VERRILL ROAD
A) PRESCRIPTIVE EASEMENT FOR
HIGHWAY PURPOSES WITHIN LIMITS OF
WROUGHT PORTION (L.O.W.P.)

STRUT APPROXIMATE LOCATION
LAT. - N 44-07-05
LONG - W 70-20-02

STATE OF MAINE
REGISTRY OF DEEDS
COUNTY _____
RECEIVED _____, _____
at _____h_____m_____M and recorded in
Plan Book _____, Page _____
Attest: _____
REGISTER

PIN 17530.00

SYMBOLS
IP or IPF (IRON PIPE or PIN FOUND)
ST. (SEPTIC TANK)
(ROW MONUMENT)
BM (TRAVERSE POINT)
WELL
GROUNDING UNIT LINE
CONSTRUCTION LIMIT LINE
PROPERTY LINE
LIMITS OF "VERRILL" RIGHT PORTION (L.O.W.P.)
EXISTING RIGHT OF WAY
NEW RIGHT OF WAY
NEW ROW WITHIN EXIST. ROW
CONTROL OF ACCESS
WATER LINE
GAS LINE
ELECTRIC LINE
TELEPHONE LINE
SEWER LINE

ITEM	TECH	CHECKED
BASE MAP		
EXIST. R/W	G.L.L.	C.W.K.
PROP. LINES	G.L.L.	N.B.D.
AREAS	G.L.L.	N.T.A.

STATE OF MAINE
DEPARTMENT OF TRANSPORTATION
16 STATE HOUSE STATION - AUGUSTA, ME 04333-0016

MINOT
RIGHT OF WAY MAP

REVISIONS

NO.	DATE	DESCRIPTION	BY

PLAN FILED IN PLAN BOOK	PAGE	COUNTY RECORD			
NO.	GRANTOR	INSTRUMENT	DATE	BOOK	PAGE

DAVID A. COLE
COMMISSIONER
KENNETH L. SWEENEY
CHIEF ENGINEER
DATE

STATE OF MAINE
CHRISTOPHER W. KNIGHT 2257
PROFESSIONAL LAND SURVEYOR

To the best of my knowledge and belief the Highway Right of Way lines depicted hereon are based upon a survey conforming to the Standards of Practice promulgated by the Maine Board of Licensure for Professional Land Surveyors 02-360 CMR, Chapter 90; Exceptions: (1) No separate survey report, (2) Monumentation only as shown on plan. See sheet X of this plan set for coordinates. (3) Other boundary lines, including lines between abutters are approximate and for general reference purposes only.

STATE AID HIGHWAY NO. 2
WOODMAN HILL ROAD
MINOT ANDROSCOGGIN COUNTY
STATE PROJECT NO. 17530.00

JANUARY 2011 | RIGHT-OF-WAY MAP | D.O.T. FILE NO. 1-300
SCALE 1" = 25' | SHEET 1 OF 1

SHEET NUMBER
13
OF 13

Filename: ...\00\ROW\MSTA\013_RWPLAN1.dgn Division: HIGHWAY Username: michael.lenko Date:3/9/2011