STATE OF MAINE
DEPARTMENT OF TRANSPORTATION
AUGUSTA, MAINE

CASCO BAY
TIMBER PIER REHABILITATION
WIN NO. 17455.10

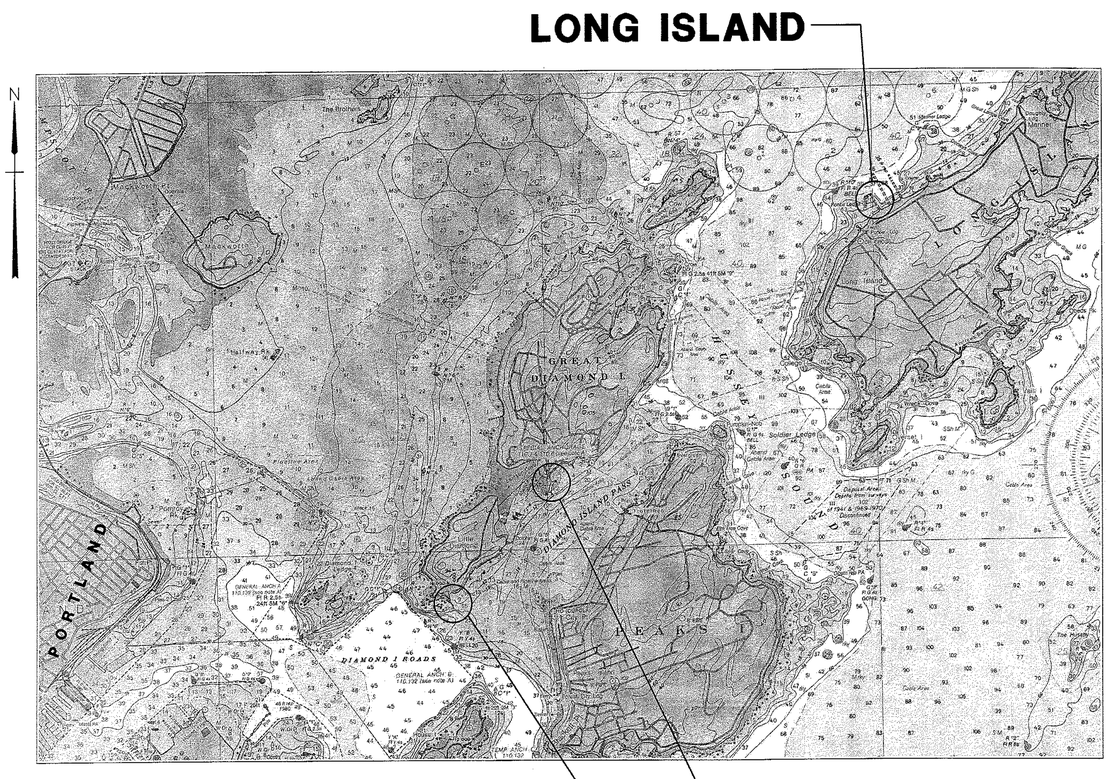

LOCATION MAP

FROM NOAA CHART
(NOT TO BE USED FOR
NAVIGATION, NOT TO SCALE)

LIST OF DRAWINGS

DISCIPLINE NO.	SHEET NO.	DRAWING TITLE
G1	1	TITLE SHEET – LOCATION MAP AND INDEX
G2	2	GENERAL NOTES
C1	3	LITTLE DIAMOND ISLAND – GENERAL PLAN AND TYPICAL SECTIONS
C2	4	GREAT DIAMOND ISLAND – GENERAL PLAN AND TYPICAL SECTIONS
D1	5	LITTLE DIAMOND ISLAND – DEMOLITION PLAN
D2	6	GREAT DIAMOND ISLAND – DEMOLITION PLAN
D3	7	LONG ISLAND – DEMOLITION PLAN
S1	8	LITTLE DIAMOND ISLAND – PILE, FRAMING AND DECK PLANS
S2	9	LITTLE DIAMOND ISLAND – PIER DETAILS – PART 1
S3	10	LITTLE DIAMOND ISLAND – PIER DETAILS – PART 2
S4	11	LITTLE DIAMOND ISLAND – FENDER SYSTEM DETAILS
S5	12	GREAT DIAMOND ISLAND – PILE, FRAMING AND DECK PLANS
S6	13	GREAT DIAMOND ISLAND – PIER DETAILS – PART 1
S7	14	GREAT DIAMOND ISLAND – PIER DETAILS – PART 2
S8	15	LONG ISLAND – FENDER DETAILS
RD1	16	LITTLE DIAMOND ISLAND – REFERENCE DRAWING 1
RD2	17	LITTLE DIAMOND ISLAND – REFERENCE DRAWING 2
RD3	18	LITTLE DIAMOND ISLAND – REFERENCE DRAWING 3
RD4	19	LITTLE DIAMOND ISLAND – REFERENCE DRAWING 4
RD5	20	GREAT DIAMOND ISLAND – REFERENCE DRAWING 1
RD6	21	GREAT DIAMOND ISLAND – REFERENCE DRAWING 2
RD7	22	GREAT DIAMOND ISLAND – REFERENCE DRAWING 3
RD8	23	GREAT DIAMOND ISLAND – REFERENCE DRAWING 4
RD9	24	GREAT DIAMOND ISLAND – REFERENCE DRAWING 5

STATE OF MAINE
DEPARTMENT OF TRANSPORTATION

APPROVED | DATE
COMMISSIONER: | 10/25/11
CHIEF ENGINEER: | 10/24/11

STATE OF MAINE ROBERT E. BEITCLING No. 8721 LICENSED PROFESSIONAL ENGINEER

SIGNATURE | 8721
P.E. NUMBER | 10/18/2011
DATE

PROJECT INFORMATION

PROGRAM	MULTIMODAL
PROJECT MANAGER	PAUL POTTLE
DESIGNER	DMH/MKN
CONSULTANT	FAY, SPOFFORD & THORNDIKE
PROJECT RESIDENT	
CONTRACTOR	
PROJECT COMPLETION DATE	

CASCO BAY
TIMBER PIER REHABILITATION

TITLE SHEET – LOCATION MAP AND INDEX

SHEET NUMBER
G1
1 OF 24

R:\tm-091 casco bay\cadd\COVER.dwg 10/18/11 10:03 [43.21] By nicola_m

GENERAL NOTES:

1. UTILITIES NOT SHOWN ON THESE PLANS MAY EXIST. VERIFY THE LOCATION ELEVATION, SIZE AND MATERIAL OF ALL UTILITIES. PROTECT ALL UTILITY LINES AND STRUCTURES THROUGHOUT ALL PHASES OF WORK. NO UTILITY SERVICES SHALL BE INTERRUPTED WITHOUT PRIOR APPROVAL FROM THE TOWN.
2. CALL DIGSAFE AT 1-888-DIGSAFE PRIOR TO ANY WORK.
3. UNLESS OTHERWISE NOTED, VERIFY, LOCATE AND PROTECT ALL EXISTING FEATURES TO REMAIN, INCLUDING, BUT NOT LIMITED TO, SIGNS, SIGN POSTS, CURBS AND BUILDINGS.
4. PREVENT ANY DISTURBANCE OR DAMAGE TO ADJACENT PROPERTIES.
5. WHERE THE WORK COINCIDES WITH EXISTING TRAVELED WAYS, THE CONTRACTOR SHALL PERFORM THE WORK IN A MANNER ACCEPTABLE TO THE OWNER SO THAT INTERFERENCE WITH AND INCONVENIENCE TO OPERATIONS, ON ACCOUNT OF THE WORK, IS KEPT TO A MINIMUM. MAINTAIN SAFE AND REASONABLE INGRESS TO AND EGRESS FROM ABUTTING BUILDINGS AND TRAVELED WAYS. MAINTAIN SAFE AND UNENCUMBERED ACCESS THROUGHOUT THE WORK AREA AT ALL TIMES FOR EMERGENCY AND PUBLIC SAFETY SERVICES.
6. PROJECT DATUM IS MEAN LOW WATER = 0.0'

DEMOLITION NOTES:

1. FOR DETAILS OF EXISTING STRUCTURES, SEE REFERENCE DRAWINGS.
2. DEMOLISH SHALL MEAN TO INCLUDE THE TRANSPORT AND LAWFUL DISPOSAL OF ALL DEMOLISHED OR DISASSEMBLED FEATURES.
3. A CONTAINMENT BOOM SHALL BE IN PLACE PRIOR TO AND DURING ALL DEMOLITION AND CONSTRUCTION ACTIVITIES AND SHALL BE INSPECTED EVERY OTHER DAY OR AS DIRECTED AND REPAIRS SHALL BE MADE IMMEDIATELY.
4. NO MATERIAL SHALL BE ALLOWED TO DROP INTO THE WATER.
5. PILE DEMOLITION SHALL CONSIST OF PULLING THE PILES IN THEIR ENTIRETY.
6. EXISTING TIMBER FOUNDATION PILES, BRACING AND DECKING TIMBERS, EXCEPT FENDER PILES, SHALL BE ASSUMED TO BE CCA TREATED.

STRUCTURAL NOTES:

A. TIMBER PILES:

1. TIMBER PILES FOR PIER FOUNDATIONS SHALL BE SOUTHERN YELLOW PINE, CLEAN-PEELED AND TREATED WITH CCA IN ACCORDANCE WITH AWPA U1-10 AND T1-10. CCA SHALL CONFORM TO AWPA P5. THE RETENTION OF PRESERVATIVE SHALL NOT BE LESS THAN 2.5 PCF.
2. TIMBER PILES FOR FENDER SHALL BE GREENHEART (NECTANDRA RODIOEI), CLEAN-PEELED CONFORMING TO THE GUYANA GRADING RULES.

LEGEND:

o VERTICAL PILE

BATTER PILE (4:12)

B. TIMBER:

1. ALL TIMBER SHALL BE TREATED SOUTHERN YELLOW PINE AS LISTED BELOW:

ITEM	TREATMENT ACQ	TREATMENT CCA	DRESSING	GRADE
DECK PLANKING	0.6 PCF		S4S	S.Y.P. No. 1 DENSE
CURB & RAILING	0.6 PCF		S4S	S.Y.P. No. 1
CAPS, INTERIOR STRINGERS, CRIB PLANKS		2.5 PCF	S2E	S.Y.P. No. 1 DENSE
EXTERIOR STRINGERS		2.5 PCF	S4S	S.Y.P. No. 1 DENSE
BRACING		2.5 PCF	S2S	S.Y.P. No. 1 DENSE

2. PRESSURE TREATMENT SHALL BE IN ACCORDANCE WITH AWPA STANDARD P5. TREATMENT SHALL BE BY THE FULL CELL PROCESS IN ACCORDANCE WITH AWPA STANDARDS U1-10 AND T1-10.
3. TIMBER SHALL BE INSPECTED BY AN INDEPENDENT COMMERCIAL LABORATORY PRIOR TO DELIVERY TO THE SITE.

C. HARDWARE:

1. ALL HARDWARE AND FASTENERS SHALL BE HOT DIP GALVANIZED, UNLESS NOTED OTHERWISE.
2. ALL CONNECTION PLATES AND ANGLES SHALL CONFORM TO ASTM A36 AND BE HOT DIP GALVANIZED.
3. ALL GALVANIZED BOLTS AND RELATED HARDWARE SHALL CONFORM TO ASTM A307.

DESIGN LIVE LOADS:

PIER – LITTLE DIAMOND ISLAND

1. VERTICAL LOADS:
   A. UNIFORM LOAD – 100 P.S.F.
   OR
   B. VEHICLE LOAD – H10 TRUCK

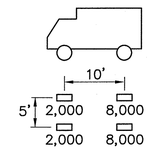

WHEEL LOADS – LBS.

2. HORIZONTAL LOAD:
   A. 325 LBS. PER LINEAR FOOT
3. RAILINGS:
   A. 300 LBS. CONCENTRATED LOAD ANY DIRECTION
   B. 100 LBS. PER LINEAR FOOT UNIFORM LOAD ANY DIRECTION

RAILING LOADS ARE NONCONCURRENT AND ARE APPLIED TO TOP RAIL.

FENDER DESIGN LOADS:

VESSELS:	MV MAQUOIT II	MV AUCOCISCO III
LENGTH	98'	110'
BEAM	32'	32'
MAX. DISPLACEMENT	285 LONG TONS	278 LONG TONS

BERTHING LOADS:

BERTHING VELOCITY		ENERGY TO FENDER	MINIMUM FENDER DESIGN ENERGY	MAX. REACTION
SHIP VELOCITY (Vs)	⊥ TO FENDER			
2.0 KNOTS	0.54 KNOTS	8,000 FT. LBS.	12,000 FT. LBS.	25,000 LB.

ABBREVIATIONS:

ACQ	ALKALINE COPPER QUAT
ADA	AMERICAN WITH DISABILITIES ACT
ADD'L	ADDITIONAL
ASTM	AMERICAN SOCIETY OF
AWPA	AMERICAN WOOD PROTECTION ASSOCIATION
B'HEAD	BUTTONHEAD
CCA	CHROMATED COPPER ARSENATE
CONT.	CONTINUOUS
C'SINK	COUNTERSINK
DIA or ø	DIAMETER
DO	DITTO
EL.	ELEVATION
HDG	HOT DIP GALVANIZED
LBS	POUNDS
LG.	LONG
MACH.	MACHINE
MAX	MAXIMUM
MIN	MINIMUM
MHW	MEAN HIGH WATER
MLLW	MEAN LOWER LOW WATER
MLW	MEAN LOW WATER
O.C.	ON CENTER
PCF	POUNDS PER CUBIC FOOT
PL	PLATE
PSF	POUNDS PER SQUARE FOOT
PTL	PRESSURE TREATED LUMBER
SPCS.	SPACES
SST	STAINLESS STEEL
S.Y.P.	SOUTHERN YELLOW PINE
SQ	SQUARE
TYP.	TYPICAL

DESIGN LIVE LOADS:

PIER – GREAT DIAMOND ISLAND

1. VERTICAL LOADS:
   A. UNIFORM LOAD – 250 P.S.F.
   OR
   B. VEHICLE LOAD – H20 TRUCK

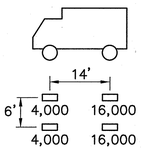

WHEEL LOADS – LBS.

2. HORIZONTAL LOAD:
   A. 325 LBS. PER LINEAR FOOT
3. RAILINGS:
   A. 300 LBS. CONCENTRATED LOAD ANY DIRECTION
   B. 100 LBS. PER LINEAR FOOT UNIFORM LOAD ANY DIRECTION

RAILING LOADS ARE NONCONCURRENT AND ARE APPLIED TO TOP RAIL.

WALKWAY:

1. VERTICAL LOAD – 100 P.S.F.
2. RAILINGS – SAME AS PIER RAILING

STATE OF MAINE
DEPARTMENT OF TRANSPORTATION

APPROVED — DATE

COMMISSIONER:

CHIEF ENGINEER:

STATE OF MAINE — ROBERT E. BERTOLINO No. 8721 — LICENSED PROFESSIONAL ENGINEER

Robert E Bertolino — SIGNATURE

8721 — P.E. NUMBER

10/18/2011 — DATE

PROJECT INFORMATION

PROGRAM	
PROJECT MANAGER	
DESIGNER	
CONSULTANT	FAY, SPOFFORD & THORNDIKE
PROJECT RESIDENT	
CONTRACTOR	
PROJECT COMPLETION DATE	

CASCO BAY
TIMBER PIER REHABILITATION

GENERAL NOTES

SHEET NUMBER

G2

R:\tm-091 casco bay\cadd\SHEET 2.dwg 09/29/11 09:48 [23.97] By tripp_r

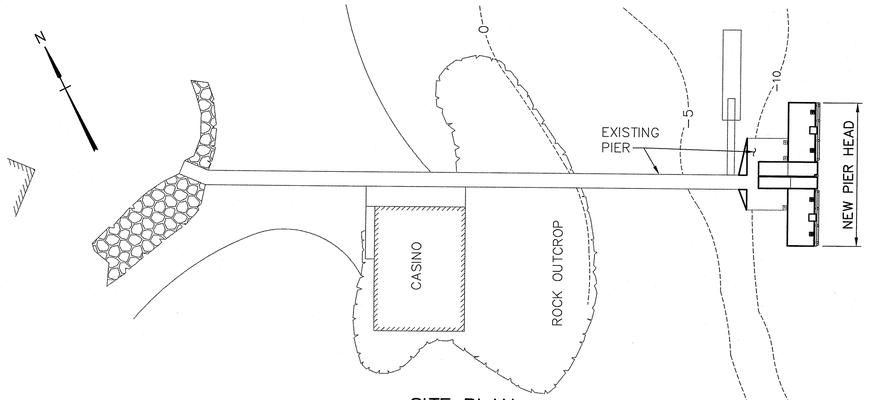

SITE PLAN
SCALE: 1"=40'

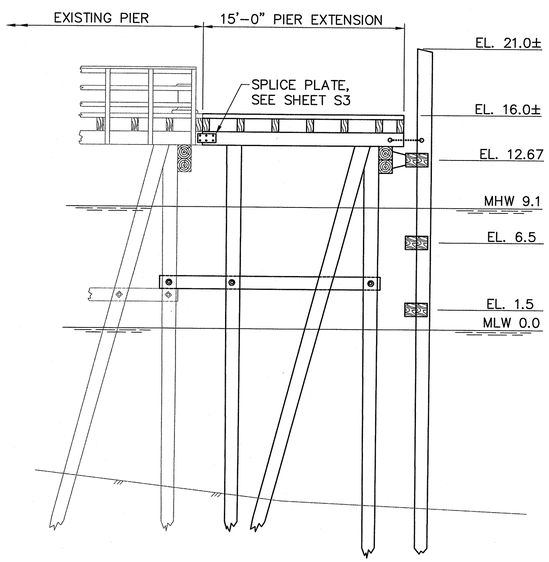

SECTION A-A
SCALE: 3/16"=1'-0"

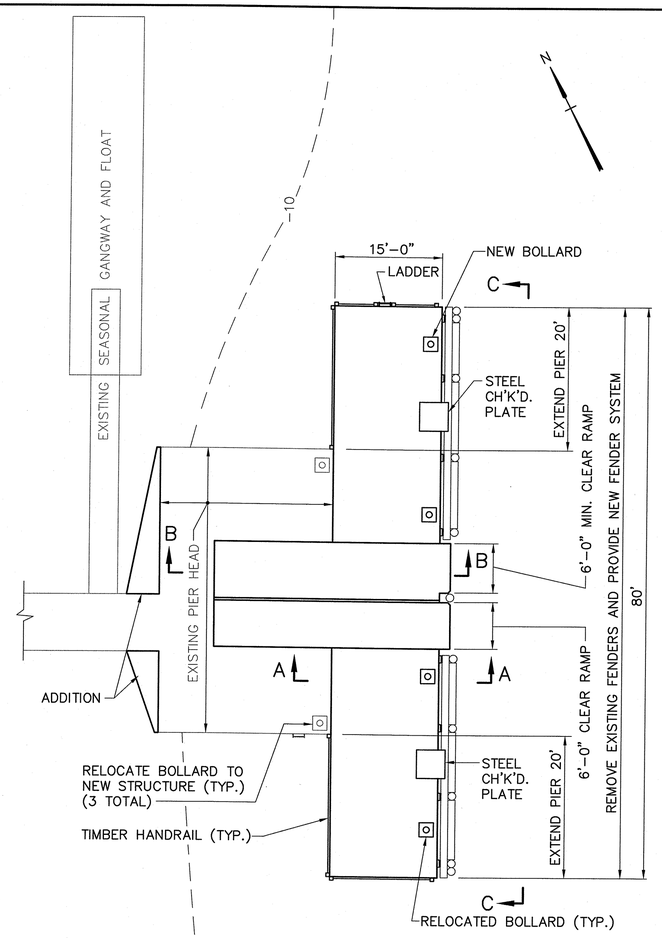

PIER HEAD PLAN
SCALE: 1"=10'

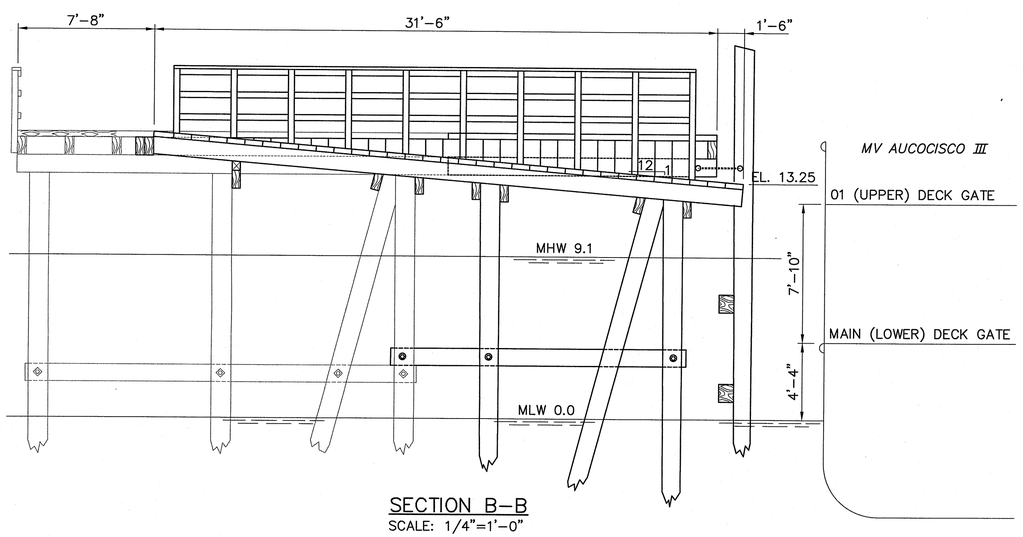

SECTION B-B
SCALE: 1/4"=1'-0"

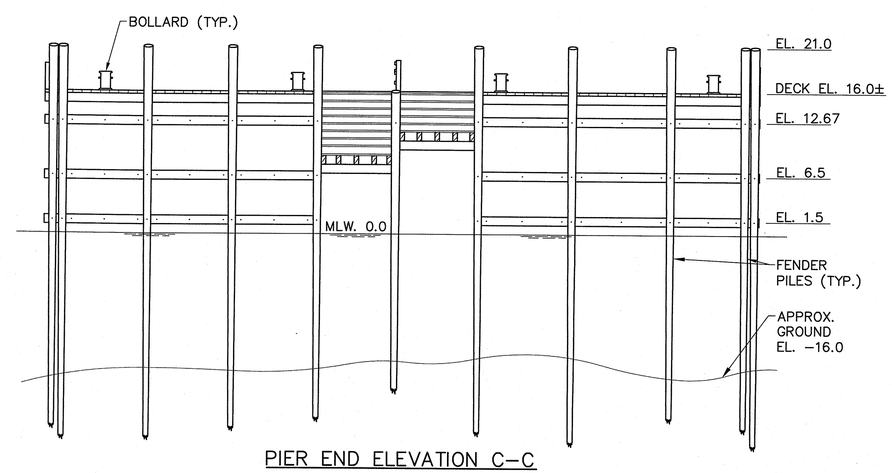

PIER END ELEVATION C-C
SCALE: 1/8" = 1'-0"

STATE OF MAINE
DEPARTMENT OF TRANSPORTATION

APPROVED | DATE
COMMISSIONER:
CHIEF ENGINEER:

STATE OF MAINE ROBERT E. BIERTOLINO No. 8721 LICENSED PROFESSIONAL ENGINEER

SIGNATURE
8721
P.E. NUMBER
10/18/2011
DATE

PROJECT INFORMATION

PROGRAM	
PROJECT MANAGER	
DESIGNER	
CONSULTANT	FAY, SPOFFORD & THORNDIKE
PROJECT RESIDENT	
CONTRACTOR	
PROJECT COMPLETION DATE	

CASCO BAY
TIMBER PIER REHABILITATION

LITTLE DIAMOND ISLAND – GENERAL PLAN AND TYPICAL SECTIONS

SHEET NUMBER
C1

R:\tm-091 casco bay\cadd\LDI SITE.dwg 10/06/11 13:15 [24.84] By tripp_r

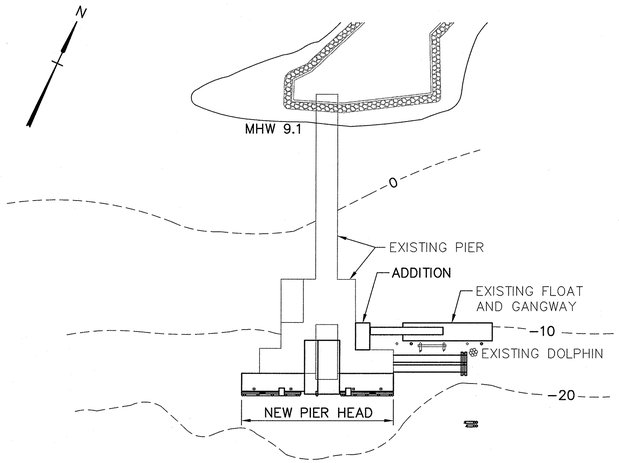

SITE PLAN
SCALE: 1"=40'

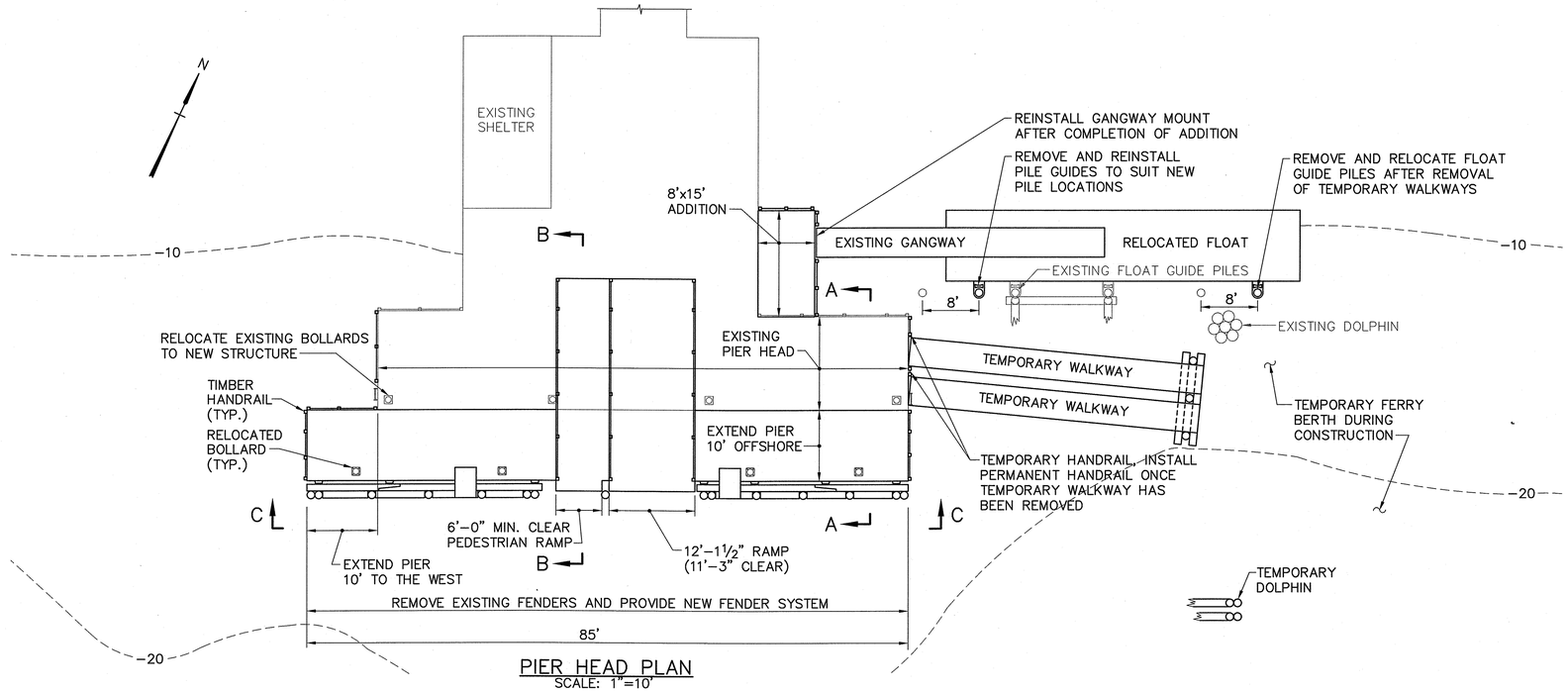

PIER HEAD PLAN
SCALE: 1"=10'

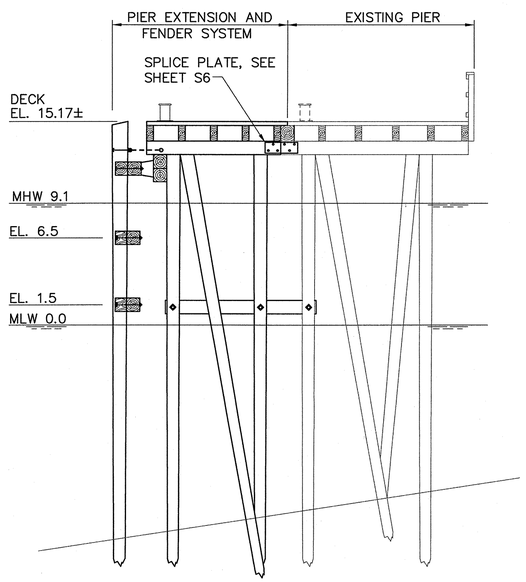

SECTION A-A
SCALE: 3/16"=1'-0"

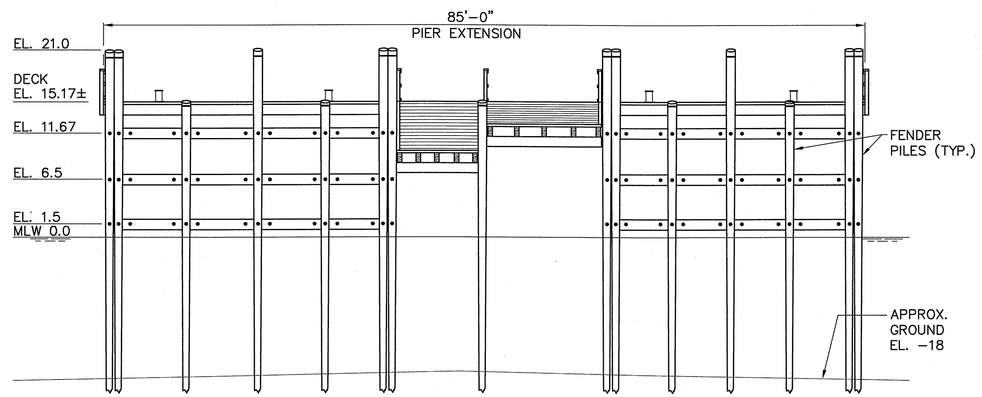

PIER ELEVATION C-C
SCALE: 1/8"=1'-0"

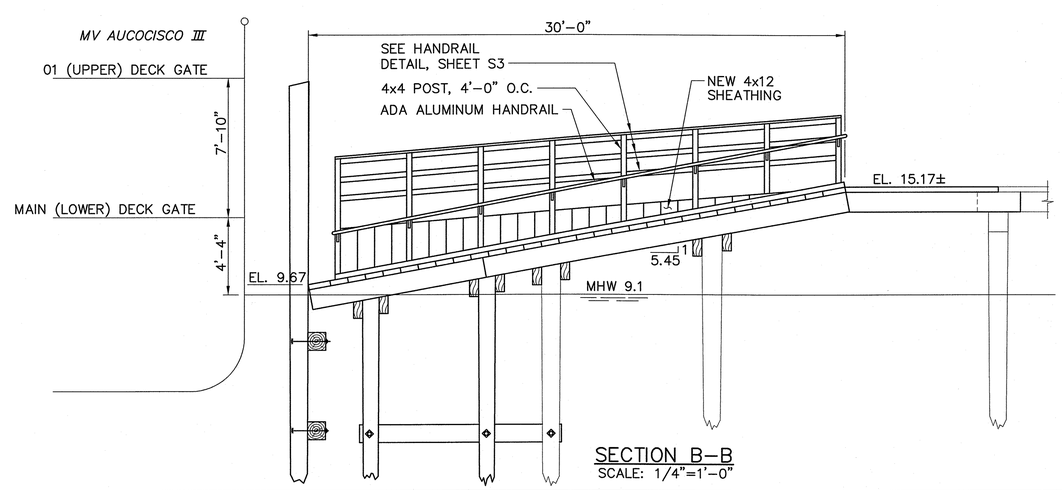

SECTION B-B
SCALE: 1/4"=1'-0"

TEMPORARY DOLPHIN/WALKWAY NOTES:

1. WALKWAY DESIGN LOAD – SEE SHEET G2, DESIGN LIVE LOADS.
2. ACTUAL WALKWAY LOCATION TO BE DETERMINED IN THE FIELD WITH THE RESIDENT AND FERRY SERVICE.
3. CONTRACTOR SHALL DESIGN AND MAINTAIN TEMPORARY WALKWAYS AND DOLPHIN THROUGHOUT CONSTRUCTION.
4. WALKWAYS SHALL BE WIDE ENOUGH TO ACCOMODATE PASSENGER RAMPS USED BY FERRIES. COORDINATE WITH CASCO BAY FERRY.

RELOCATED FLOAT:

REMOVE AND REINSTALL FLOAT GUIDES TO ACCOMODATE NEW FLOAT/PILE LOCATION. SEE SHEET S6 FOR DETAIL.

STATE OF MAINE
DEPARTMENT OF TRANSPORTATION

APPROVED | DATE
COMMISSIONER:
CHIEF ENGINEER:

STATE OF MAINE ROBERT E. BERTOLINO No. 8721 LICENSED PROFESSIONAL ENGINEER

SIGNATURE
8721
P.E. NUMBER
10/18/2011
DATE

PROJECT INFORMATION

PROGRAM	
PROJECT MANAGER	
DESIGNER	
CONSULTANT	FAY, SPOFFORD & THORNDIKE
PROJECT RESIDENT	
CONTRACTOR	
PROJECT COMPLETION DATE	

CASCO BAY
TIMBER PIER REHABILITATION

GREAT DIAMOND ISLAND – GENERAL PLAN AND TYPICAL SECTIONS

SHEET NUMBER
C2

R:\tm-091 casco bay\cadd\GDI SITE.dwg 09/29/11 09:44 [26.40] By tripp_r

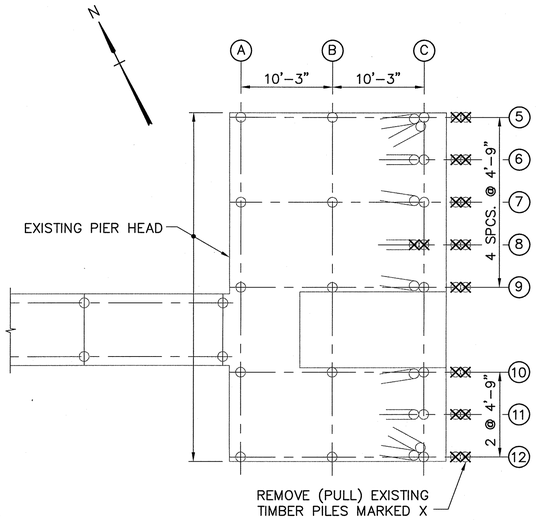

EXISTING PILE PLAN AND REMOVALS
SCALE: 1/8"=1'–0"

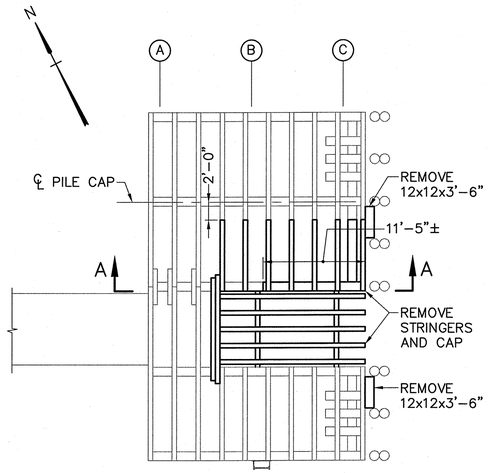

EXISTING FRAMING PLAN AND REMOVALS
SCALE: 1/8"=1'–0"

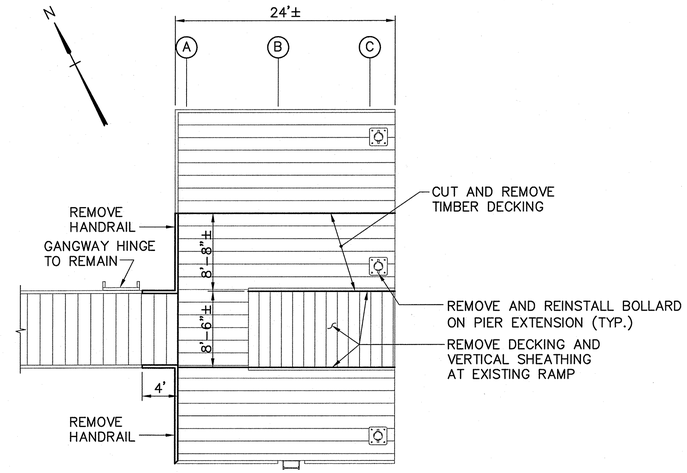

EXISTING DECK PLAN AND REMOVALS
SCALE: 1/8"=1'–0"

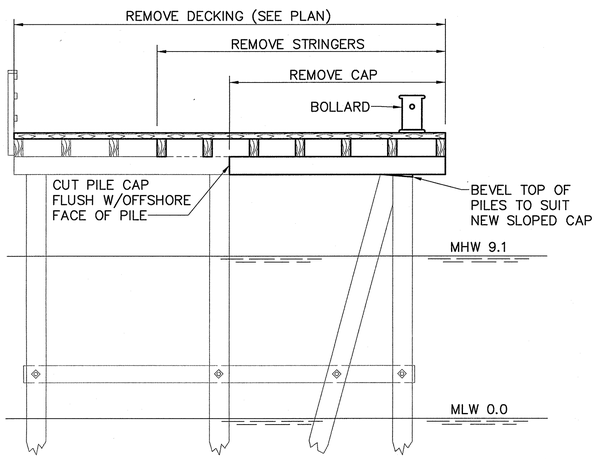

SECTION A–A
SCALE: 1/4"=1'–0"

NOTE:
SEE REFERENCE DRAWINGS FOR
EXISTING PIER DETAILS

STATE OF MAINE
DEPARTMENT OF TRANSPORTATION

APPROVED | DATE
COMMISSIONER:
CHIEF ENGINEER:

STATE OF MAINE
ROBERT E. BERTOLINO
No. 8721
LICENSED
PROFESSIONAL ENGINEER

SIGNATURE	
8721	P.E. NUMBER
	10/18/2011
	DATE

PROJECT INFORMATION

PROGRAM	
PROJECT MANAGER	
DESIGNER	
CONSULTANT	FAY, SPOFFORD & THORNDIKE
PROJECT RESIDENT	
CONTRACTOR	
PROJECT COMPLETION DATE	

CASCO BAY
TIMBER PIER REHABILITATION

LITTLE DIAMOND ISLAND
DEMOLITION PLAN

SHEET NUMBER
D1

R:\tm-091 casco bay\cadd\SHEET D1.dwg 09/29/11 09:48 [33.41] By tripp_r

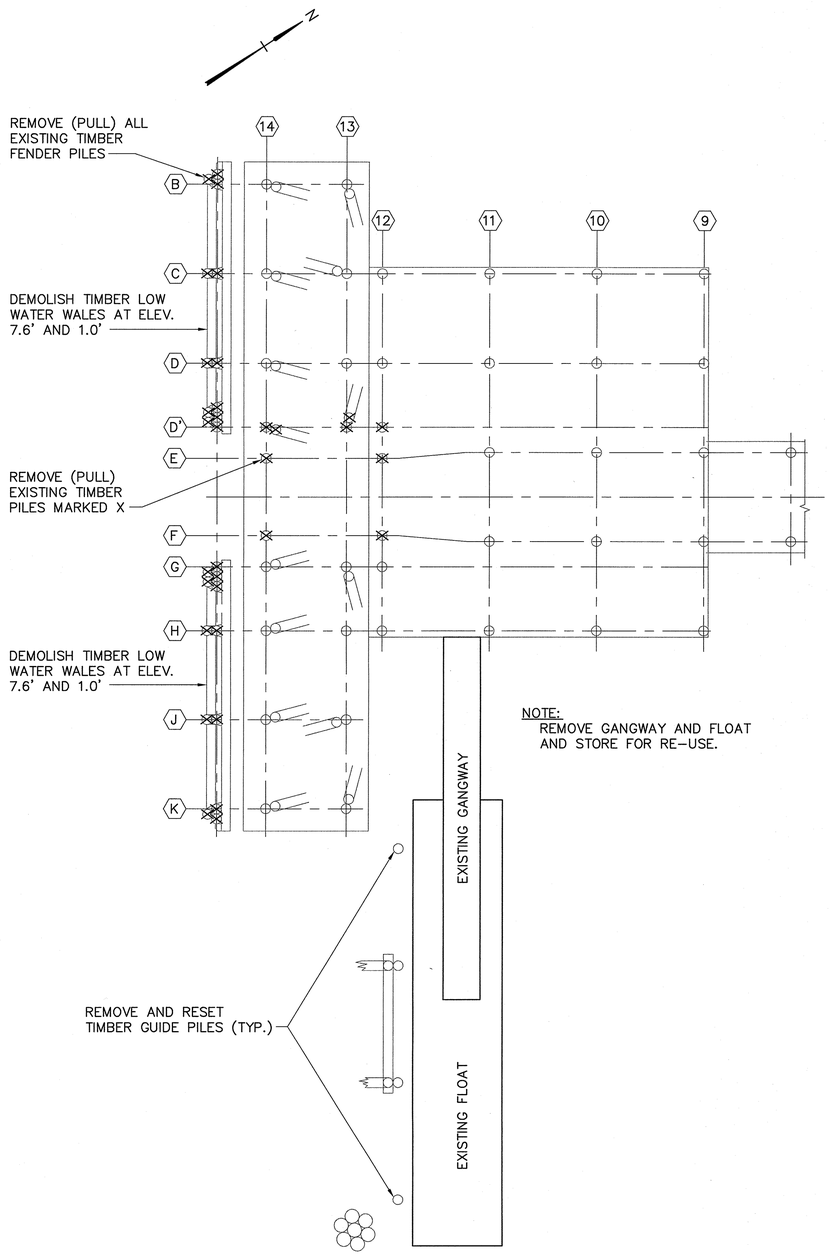

EXISTING PILE PLAN AND REMOVALS

SCALE: 1/8" = 1'-0"

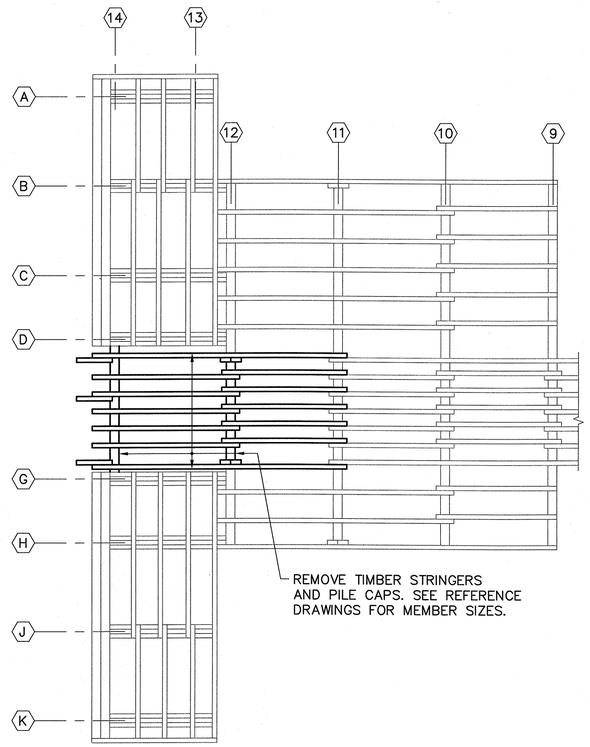

EXISTING FRAMING PLAN AND REMOVALS

SCALE: 1/8" = 1'-0"

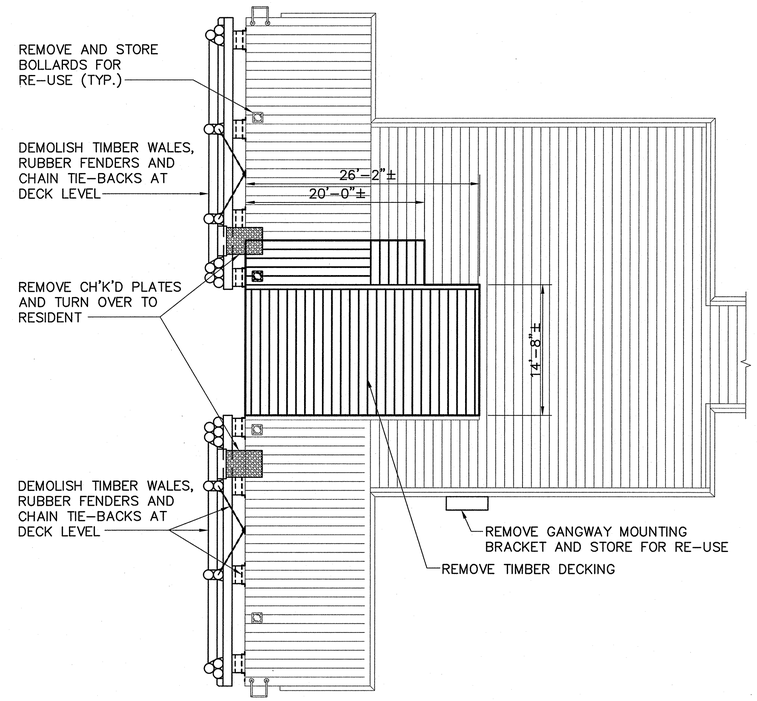

EXISTING DECK PLAN AND REMOVALS

SCALE: 1/8" = 1'-0"

NOTE: SEE REFERENCE DRAWINGS FOR EXISTING PIER DETAILS

STATE OF MAINE
DEPARTMENT OF TRANSPORTATION

APPROVED

	DATE
COMMISSIONER:	
CHIEF ENGINEER:	

STATE OF MAINE ROBERT E. BERTOLINO No. 8721 LICENSED PROFESSIONAL ENGINEER

SIGNATURE	
8721	P.E. NUMBER
FAY, SPOFFORD & THORNDIKE	10/18/2011
	DATE

PROJECT INFORMATION

PROGRAM	
PROJECT MANAGER	
DESIGNER	
CONSULTANT	FAY, SPOFFORD & THORNDIKE
PROJECT RESIDENT	
CONTRACTOR	
PROJECT COMPLETION DATE	

CASCO BAY
TIMBER PIER REHABILITATION

GREAT DIAMOND ISLAND
DEMOLITION PLAN

SHEET NUMBER

D2

R:\tm-091 casco bay\cadd\GDI Demo plan.dwg 09/29/11 09:42 [25.01] By tripp_r

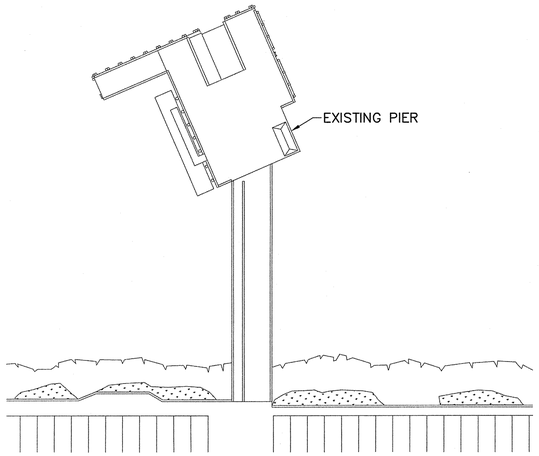

LONG ISLAND

SITE PLAN
SCALE: 1"=40'

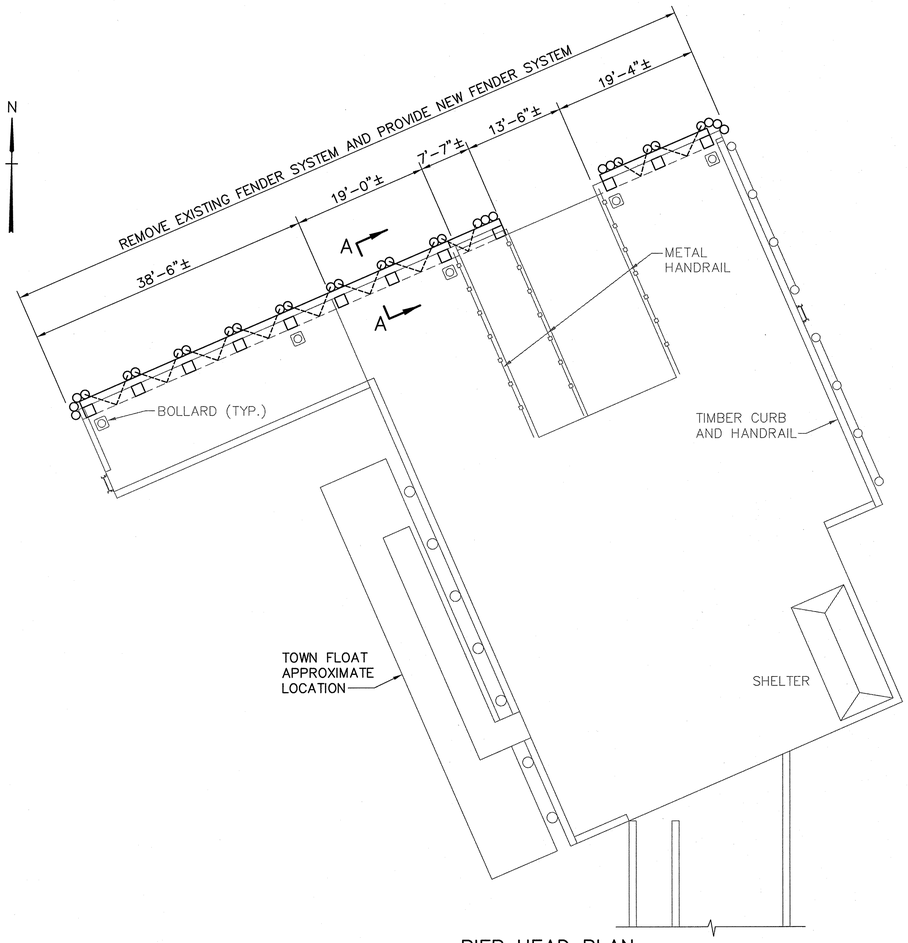

PIER HEAD PLAN
SCALE: 1"=10'

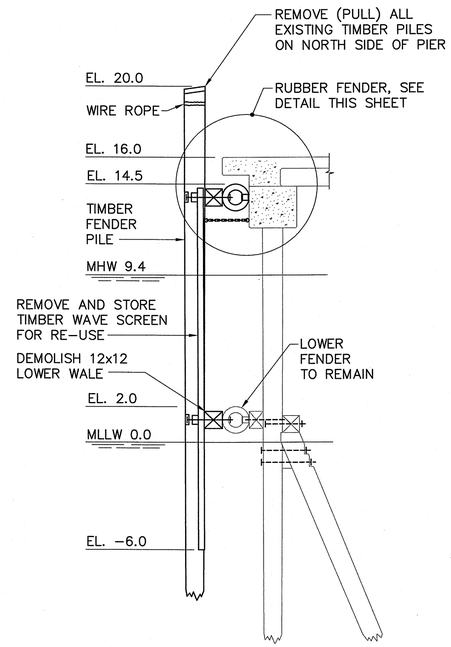

SECTION A–A
SCALE: 1/4"=1'-0"

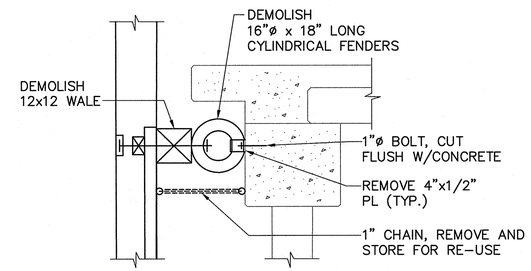

SECTION
FENDER DETAIL
SCALE: 1/2"=1'-0"

NOTE:

CARE SHALL BE TAKEN WHEN REMOVING TIMBER WAVE SCREEN. WAVE SCREEN SHALL BE REINSTALLED ONCE NEW FENDER SYSTEM IS INSTALLED.

STATE OF MAINE
DEPARTMENT OF TRANSPORTATION

APPROVED

	DATE
COMMISSIONER:	
CHIEF ENGINEER:	

STATE OF MAINE ROBERT E. BERTOLINO No. 8721 LICENSED PROFESSIONAL ENGINEER

PROJECT INFORMATION	
PROGRAM	
PROJECT MANAGER	
DESIGNER	
CONSULTANT	FAY, SPOFFORD & THORNDIKE
PROJECT RESIDENT	
CONTRACTOR	
PROJECT COMPLETION DATE	

SIGNATURE
8721
P.E. NUMBER
10/18/2011
DATE

CASCO BAY
TIMBER PIER REHABILITATION

LONG ISLAND
DEMOLITION PLAN

SHEET NUMBER
D3

R:\tm-091 casco bay\cadd\LI SITE.dwg 09/29/11 09:47 [18.96] By tripp_r

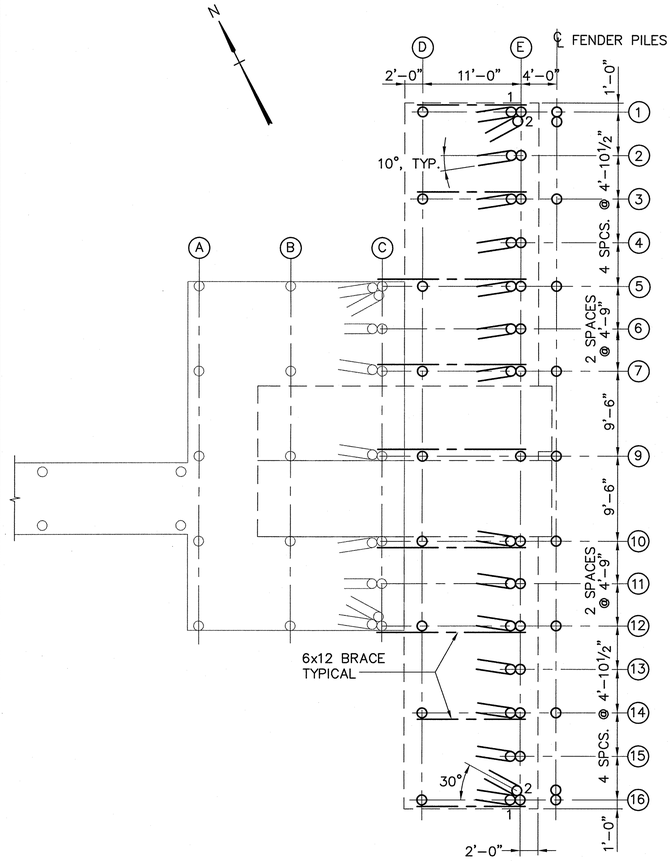

PILE PLAN
SCALE: ⅛"=1'-0"

NOTE: PILES AT LINE 8 WERE REMOVED DURING DEMOLITION

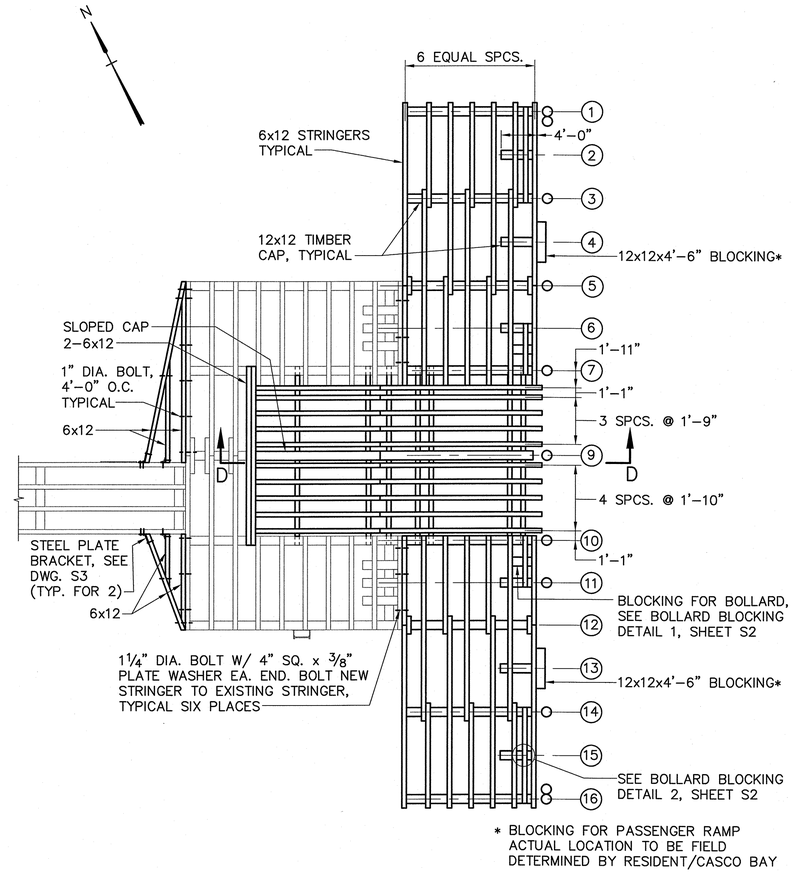

* BLOCKING FOR PASSENGER RAMP ACTUAL LOCATION TO BE FIELD DETERMINED BY RESIDENT/CASCO BAY

FRAMING PLAN
SCALE: ⅛"=1'-0"

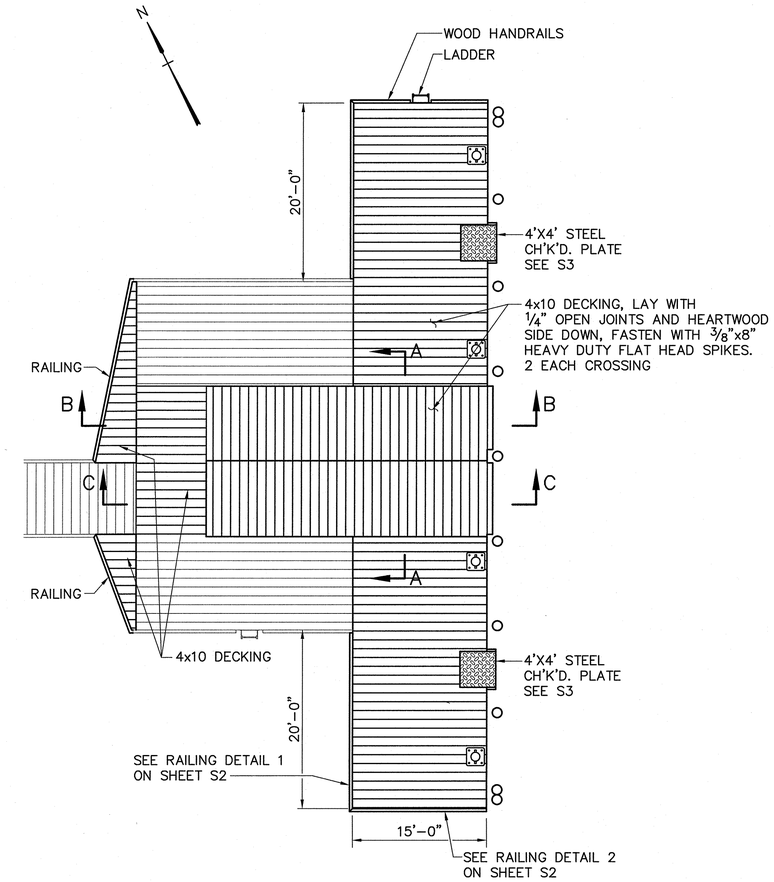

DECK PLAN
SCALE: ⅛"=1'-0"

THE ESTIMATED TIP ELEVATIONS FOR THE TIMBER PILES ARE SHOWN BELOW. THE PILES SHALL BE INSTALLED IN ACCORDANCE WITH THE CONTRACT REQUIREMENTS TO THE REQUIRED CAPACITY. DUE TO VARYING SOIL CONDITIONS, ACTUAL TIP ELEVATIONS MAY DEVIATE FROM THE ESTIMATED ELEVATION.

SCHEDULE OF PILE TIP ELEVATIONS

BENT No.	ROW No.	ESTIMATED TIP ELEVATION
1–16	D	–45.0
1–16	E	–45.0
1–16	E, BATTER PILE	–45.0

PILE DESIGN LOAD: COMPRESSION = 8 TONS
TENSION = 1.5 TONS

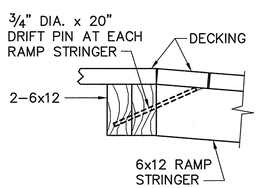

DETAIL 1
SCALE: ¾"=1'-0"

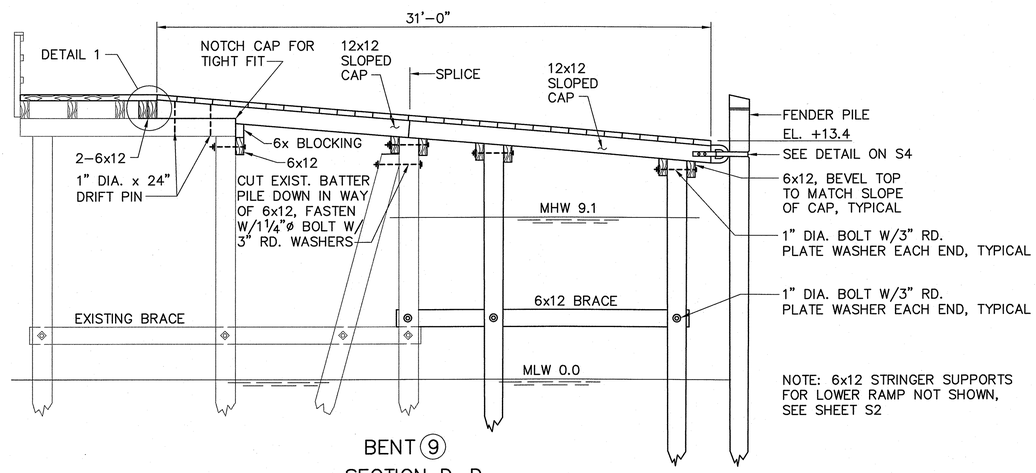

BENT 9
SECTION D–D
SCALE: ¼"=1'-0"

NOTE:
1. SECTIONS A, B & C ARE SHOWN ON SHEET S2
2. RELOCATE SIGNS AS DIRECTED BY THE RESIDENT. ASSUME 4 SIGNS.

STATE OF MAINE
DEPARTMENT OF TRANSPORTATION

APPROVED — DATE
COMMISSIONER:
CHIEF ENGINEER:

STATE OF MAINE — ROBERT E. BERTOLINO No. 8721 — LICENSED PROFESSIONAL ENGINEER

SIGNATURE
8721 — P.E. NUMBER
FAY, SPOFFORD & THORNDIKE
10/18/2011 — DATE

PROJECT INFORMATION
PROGRAM
PROJECT MANAGER
DESIGNER
CONSULTANT
PROJECT RESIDENT
CONTRACTOR
PROJECT COMPLETION DATE

CASCO BAY
TIMBER PIER REHABILITATION

LITTLE DIAMOND ISLAND
PILE, FRAMING AND DECK PLAN

SHEET NUMBER
S1
8 OF 24

R:\tm-091 casco bay\cadd\LDI pile plan.dwg 10/07/11 08:11 [40.57] By tripp_r

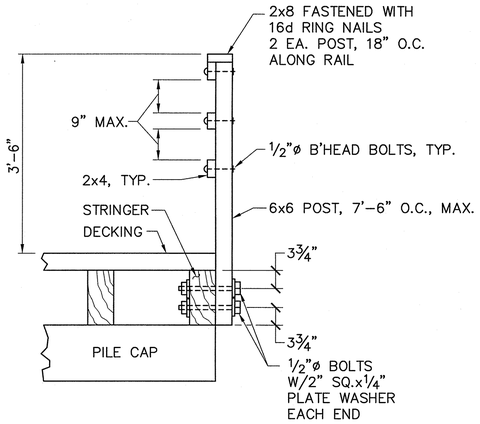

RAILING DETAIL 1
SCALE: ¾"=1'-0"

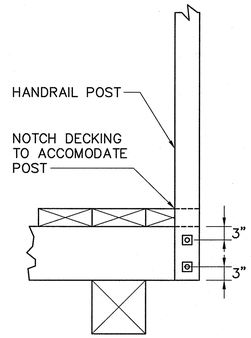

RAILING DETAIL 2
SCALE: ¾"=1'-0"

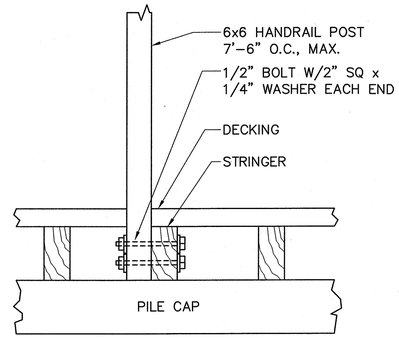

ELEVATION
RAILING DETAIL 2
SCALE: ¾"=1'-0"

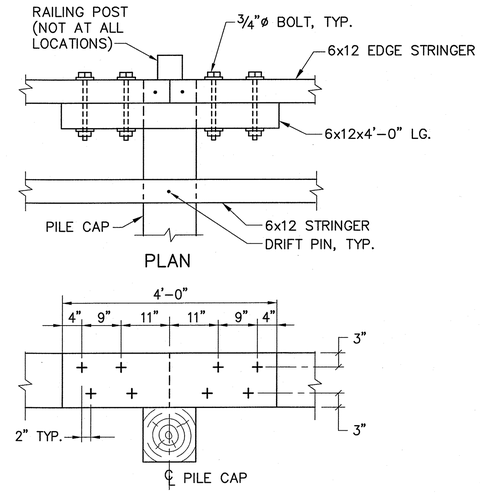

ELEVATION
SPLICE DETAIL
SCALE: ¾"=1'-0"

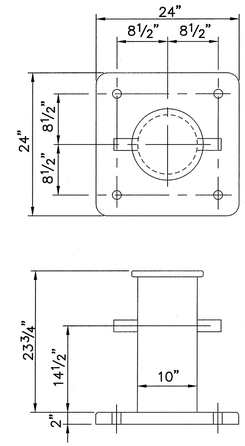

BOLLARD DETAIL
SCALE: 1"=1'-0"

NOTE: PROVIDE ONE BOLLARD FOR INSTALLATION ON PIER EXTENSION. 3 EXISTING BOLLARDS TO BE RELOCATED TO PIER EXTENSION.

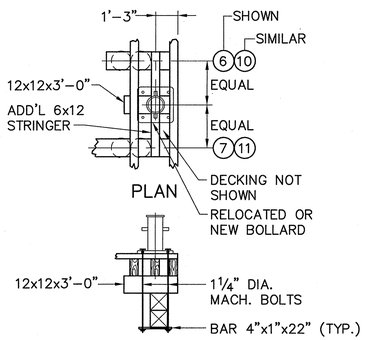

BOLLARD BLOCKING DETAIL 1
SCALE: ¼"=1'-0"

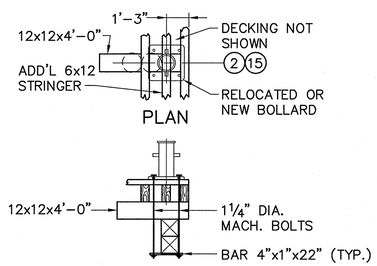

BOLLARD BLOCKING DETAIL 2
SCALE: ¼"=1'-0"

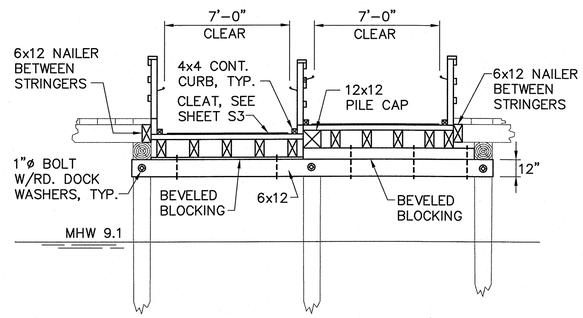

SECTION D-D
SCALE: ¼"=1'-0"

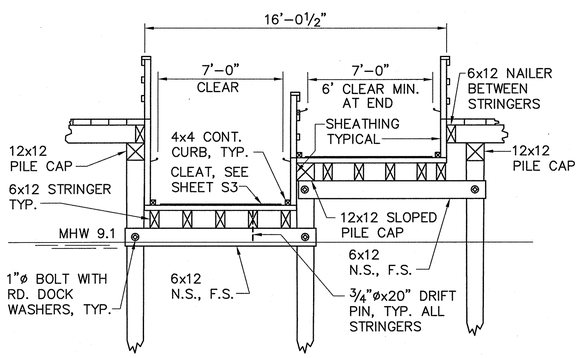

SECTION A-A
SCALE: ¼"=1'-0"

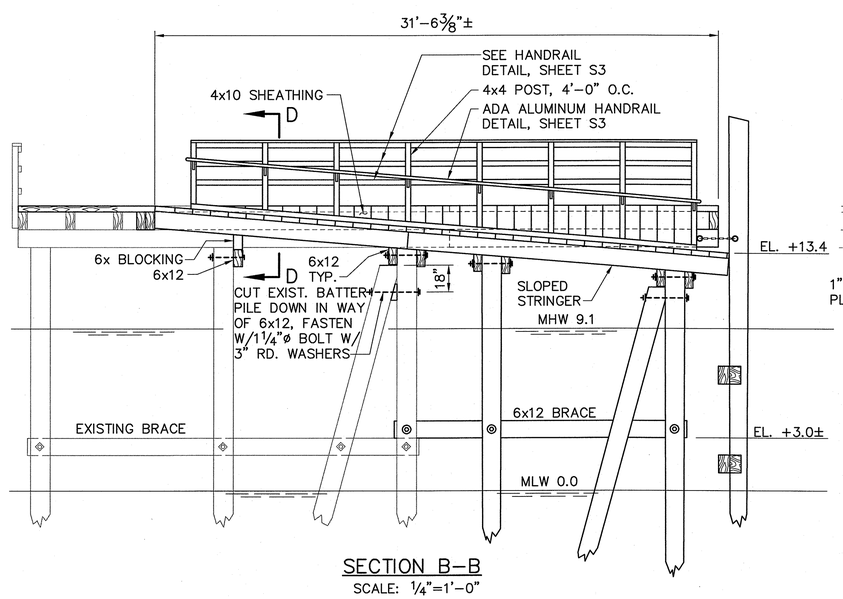

SECTION B-B
SCALE: ¼"=1'-0"

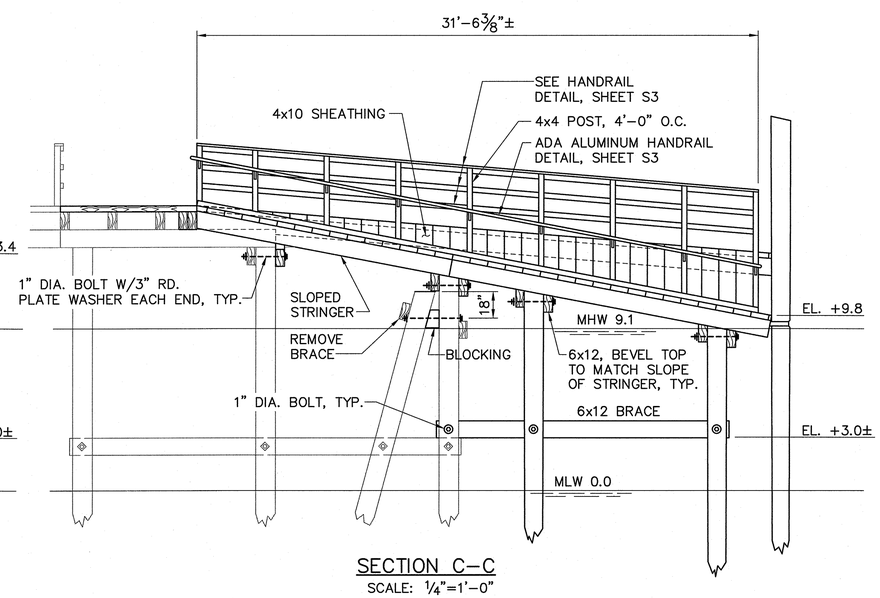

SECTION C-C
SCALE: ¼"=1'-0"

NOTE:
SECTIONS A, B & C ARE TAKEN ON SHEET S1

STATE OF MAINE
DEPARTMENT OF TRANSPORTATION

APPROVED — DATE
COMMISSIONER:
CHIEF ENGINEER:

STATE OF MAINE — ROBERT E. BERTOLINO No. 8721 — LICENSED PROFESSIONAL ENGINEER

SIGNATURE
8721
P.E. NUMBER
10/18/2011
DATE

PROJECT INFORMATION

PROGRAM	
PROJECT MANAGER	
DESIGNER	
CONSULTANT	FAY, SPOFFORD & THORNDIKE
PROJECT RESIDENT	
CONTRACTOR	
PROJECT COMPLETION DATE	

CASCO BAY
TIMBER PIER REHABILITATION

LITTLE DIAMOND ISLAND
PIER DETAILS – PART 1

SHEET NUMBER
S2
9 OF 24

R:\tm-091 casco bay\cadd\LDI MISC DETAILS.dwg 10/06/11 14:19 [28.17] By tripp_r

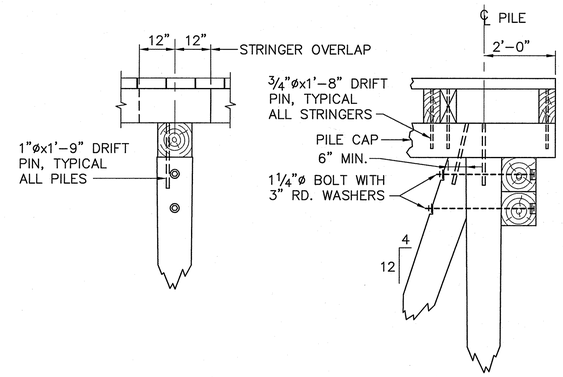

PILE, CAP & STRINGER FASTENING DETAILS
SCALE: 1/2"=1'-0"

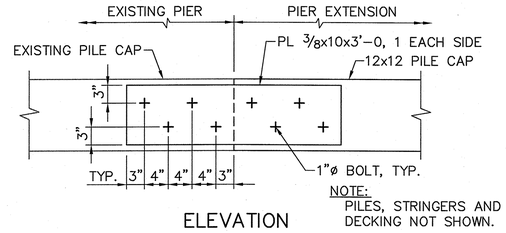

ELEVATION

PILE CAP SPLICE DETAIL
SCALE: 1"=1'-0"

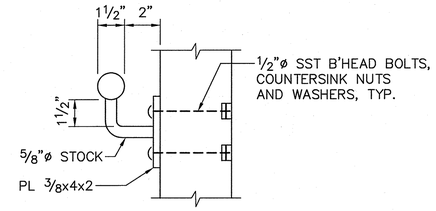

ADA ALUMINUM HANDRAIL DETAIL
SCALE: 3"=1'-0"

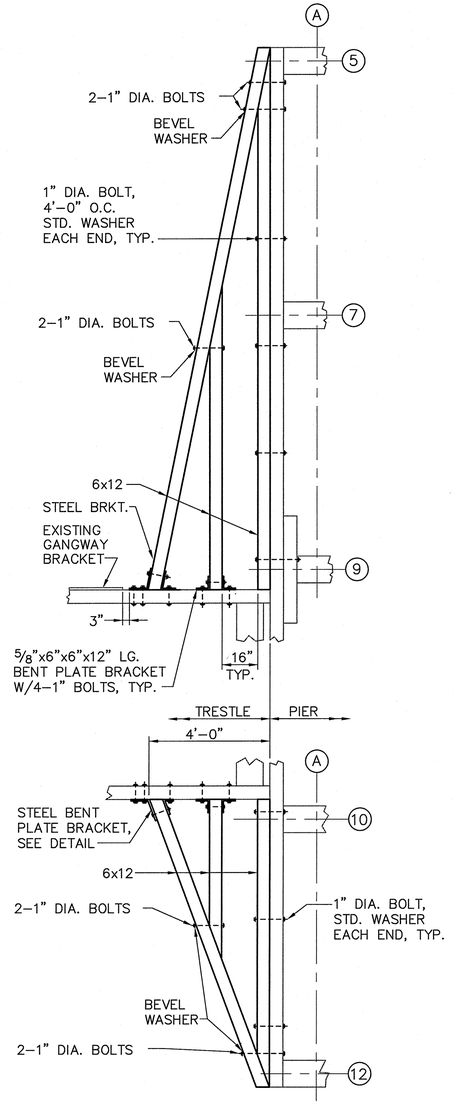

NOTE: DECKING NOT SHOWN

PART PLANS
SCALE: 3/8"=1'-0"

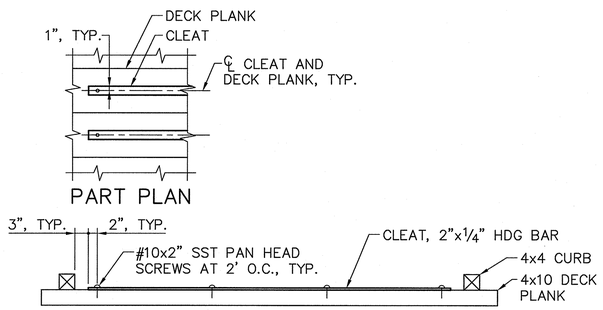

PART PLAN

ELEVATION

CLEAT DETAIL
SCALE: 3/4"=1'-0"

NOTES:
1. PROVIDE 1 CLEAT PER DECK PLANK.
2. STRINGERS AND SHEATHING NOT SHOWN.

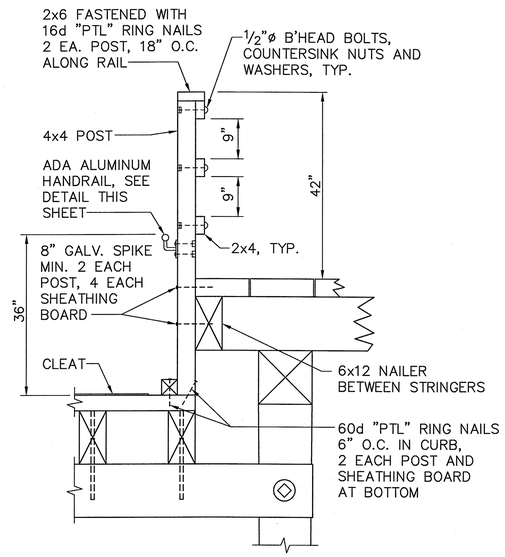

HANDRAIL DETAIL AT RAMP
SCALE: 3/4"=1'-0"

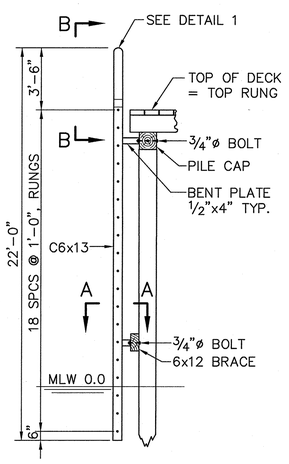

TYPICAL NEW LADDER SECTION
SCALE: 1/4"=1'=0"

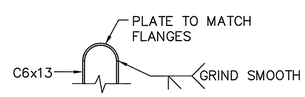

DETAIL 1
SCALE: 1/2"=1'-0"

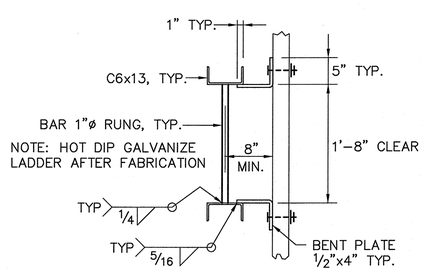

SECTION A-A
SCALE: 1/2"=1'-0"

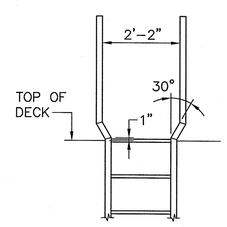

ELEVATION B-B
SCALE: 1/2"=1'-0"

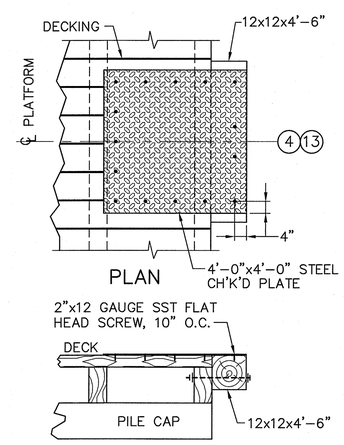

PLAN

SECTION

PLATFORM DETAIL
SCALE: 1/2"=1'-0"

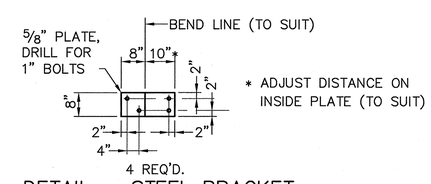

DETAIL - STEEL BRACKET
SCALE: 1/2"=1'-0"

STATE OF MAINE
DEPARTMENT OF TRANSPORTATION

APPROVED | DATE
COMMISSIONER:
CHIEF ENGINEER:

STATE OF MAINE ROBERT E. BERTOLINO No. 8721 LICENSED PROFESSIONAL ENGINEER

Robert E. Bertolino
SIGNATURE
8721
P.E. NUMBER
10/18/2011
DATE

PROJECT INFORMATION

PROGRAM	
PROJECT MANAGER	
DESIGNER	FAY, SPOFFORD & THORNDIKE
CONSULTANT	
PROJECT RESIDENT	
CONTRACTOR	
PROJECT COMPLETION DATE	

CASCO BAY
TIMBER PIER REHABILITATION

LITTLE DIAMOND ISLAND
PIER DETAILS - PART 2

SHEET NUMBER
S3
10 OF 24

R:\tm-091 casco bay\cadd\LDI DETAILS-PART2.dwg 10/18/11 12:59 [36.27] By nicola_m

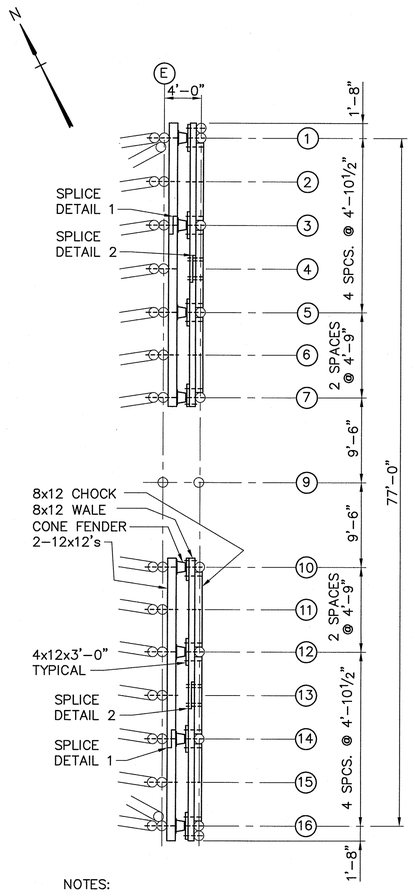

NOTES:
1. SPLICES MAY BE ELIMINATED WITH CONTINUOUS TIMBERS
2. WALES AND CHOCKS SIMILAR AT ELEVATIONS 1.5 AND 6.5

PLAN – FENDER SYSTEM AT ELEVATION 12.67
SCALE: 1/8"=1'-0"

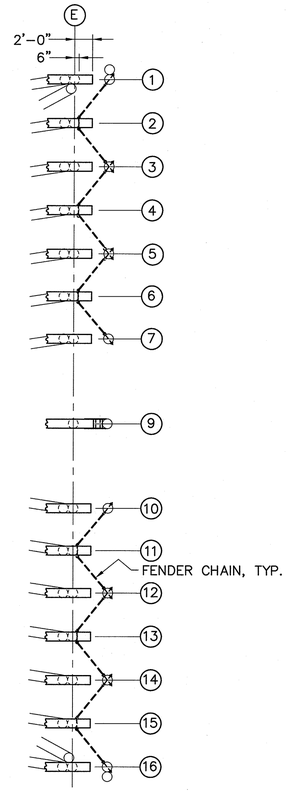

PLAN – FENDER SYSTEM AT FENDER CHAINS
SCALE: 1/8"=1'-0"

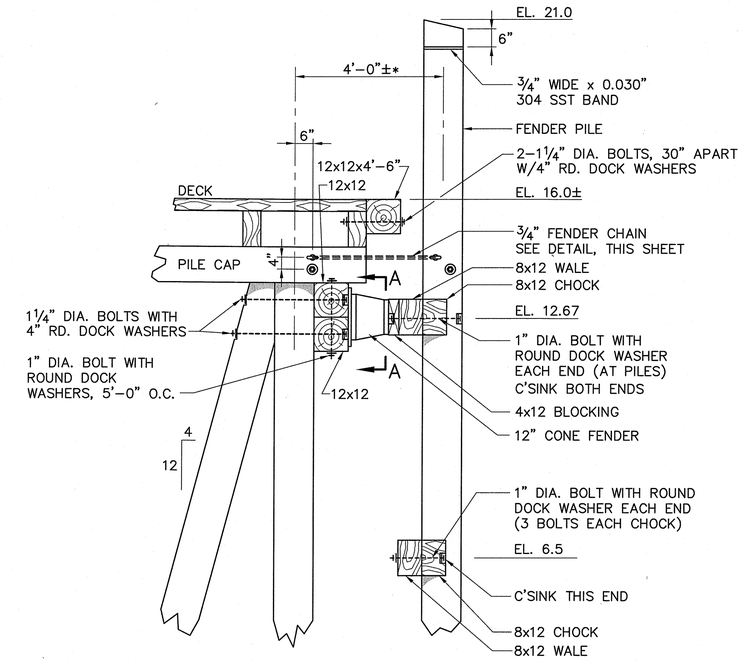

* CONTRACTOR SHALL ADJUST DISTANCE TO SUIT ACTUAL PILE AND LUMBER DIMENSIONS

TYPICAL FENDER SYSTEM SECTION
SCALE: 1/2"=1'-0"

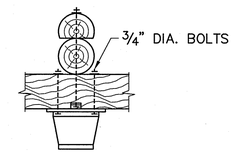

PLAN B–B
SCALE: 1/2"=1'-0"

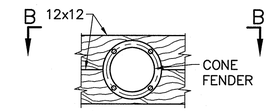

SHOWING ORIENTATION OF BOLTS

ELEVATION A–A
SCALE: 1/2"=1'-0"

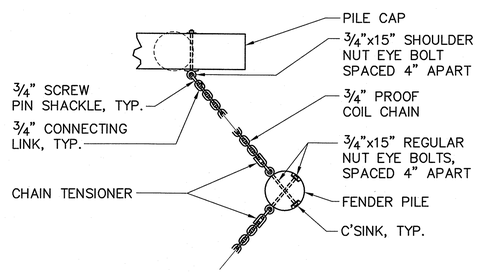

PLAN

FENDER CHAIN DETAIL
SCALE: 1/2"=1'-0"

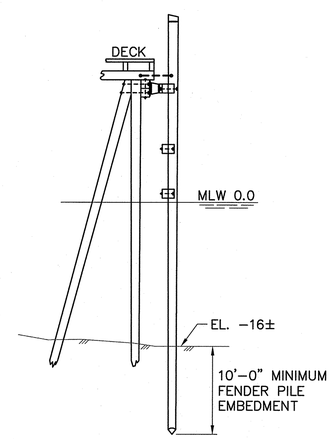

FENDER SYSTEM SECTION
SCALE: 1/8"=1'-0"

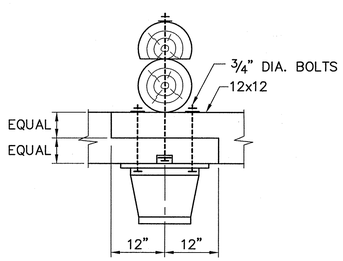

NOTE: SPLICE OF UPPER 12x12 AND LOWER 12x12 MUST BE STAGGERED

PLAN – SPLICE DETAIL 1
SCALE: ¾"=1'-0"

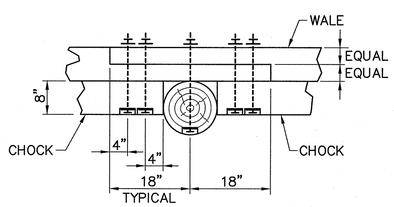

PLAN

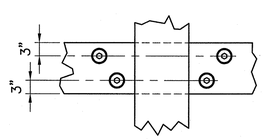

ELEVATION

NOTE: WALE SPLICE MUST BE STAGGERED FROM 12x12 SPLICES BEHIND CONE FENDER

SPLICE DETAIL 2
SCALE: ¾"=1'-0"

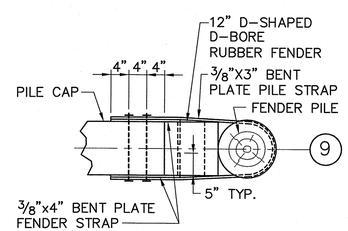

PLAN

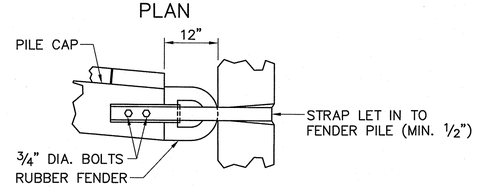

ELEVATION

DETAIL – FENDER PILE 9
SCALE: ¾"=1'-0"

STATE OF MAINE
DEPARTMENT OF TRANSPORTATION

APPROVED | DATE
COMMISSIONER:
CHIEF ENGINEER:

STATE OF MAINE ROBERT E. BERTOLINO No. 8721 LICENSED PROFESSIONAL ENGINEER

PROJECT INFORMATION

PROGRAM	
PROJECT MANAGER	
DESIGNER	
CONSULTANT	FAY, SPOFFORD & THORNDIKE
PROJECT RESIDENT	
CONTRACTOR	
PROJECT COMPLETION DATE	

SIGNATURE
8721 P.E. NUMBER
10/18/2011 DATE

CASCO BAY
TIMBER PIER REHABILITATION

LITTLE DIAMOND ISLAND
FENDER SYSTEM DETAILS

SHEET NUMBER
S4

R:\tm-091 casco bay\cadd\LDI fender system.dwg 10/06/11 13:50 [23.61] By tripp_r

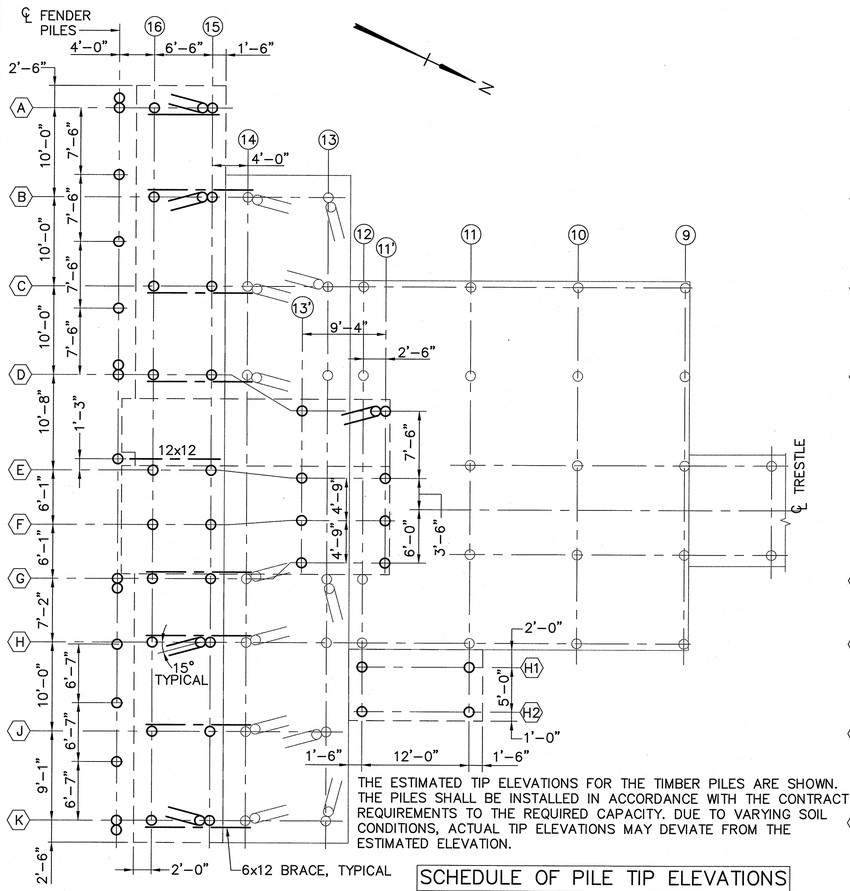

THE ESTIMATED TIP ELEVATIONS FOR THE TIMBER PILES ARE SHOWN. THE PILES SHALL BE INSTALLED IN ACCORDANCE WITH THE CONTRACT REQUIREMENTS TO THE REQUIRED CAPACITY. DUE TO VARYING SOIL CONDITIONS, ACTUAL TIP ELEVATIONS MAY DEVIATE FROM THE ESTIMATED ELEVATION.

PILE PLAN

SCALE: 1/8" = 1'-0"

SCHEDULE OF PILE TIP ELEVATIONS

BENT No.	ROW No.	ESTIMATED TIP ELEVATION
A–K	16	–50.0
A–K	15	–50.0
A–K	16, BATTER PILE	–50.0
D–G	13	–50.0
D–G	11'	–50.0
H1–H2	12	–50.0
H1–H2	11	–50.0

DESIGN PILE LOAD = 10 TONS COMPRESSION

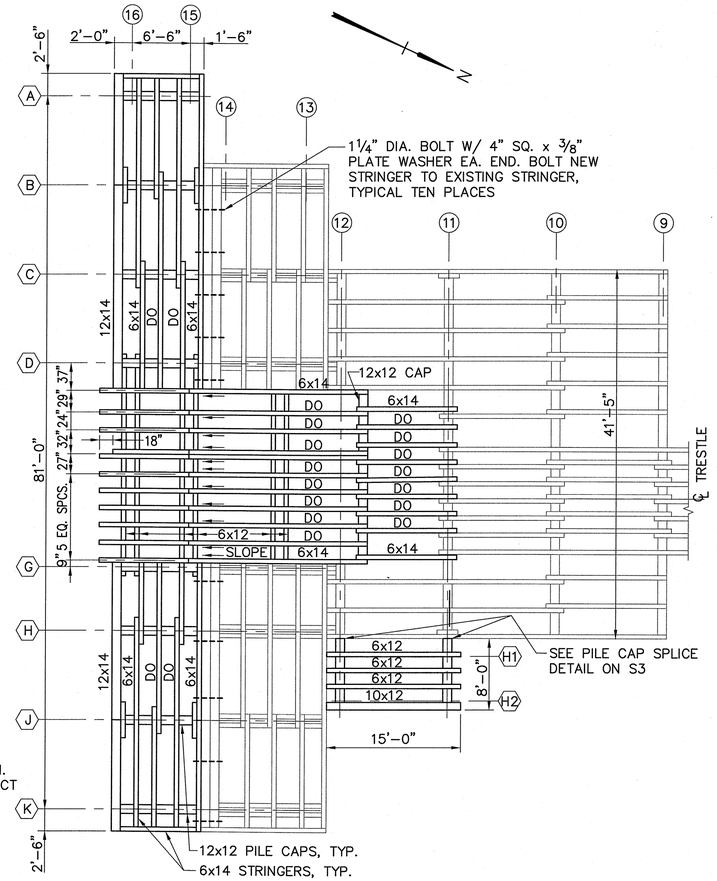

FRAMING PLAN

SCALE: 1/8" = 1'-0"

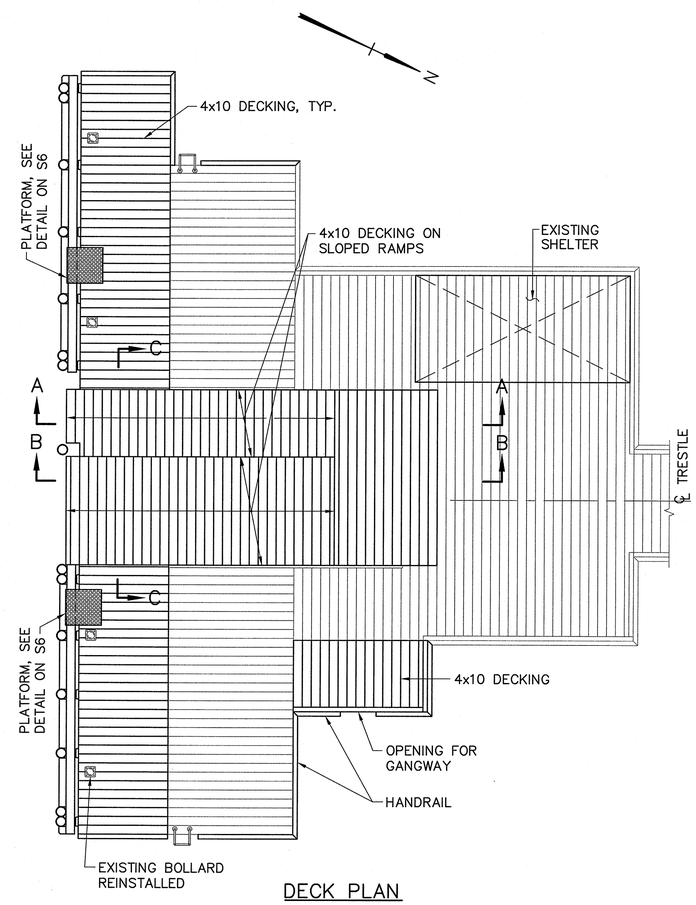

DECK PLAN

SCALE: 1/8" = 1'-0"

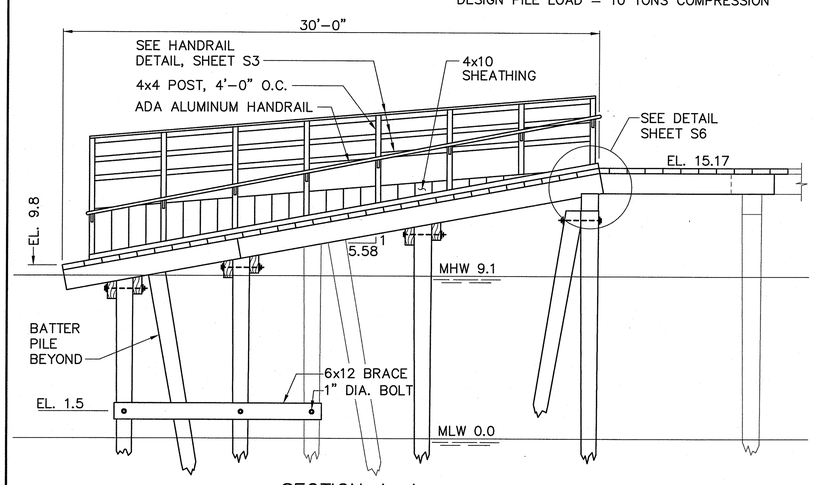

SECTION A–A

SCALE: 1/4"=1'-0"

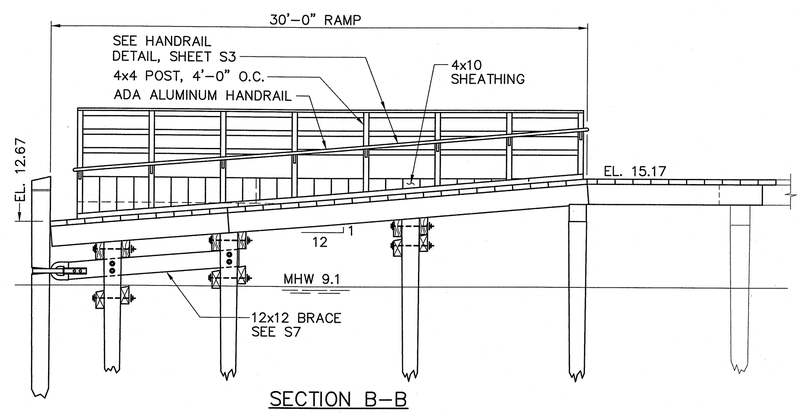

SECTION B–B

SCALE: 1/4"=1'-0"

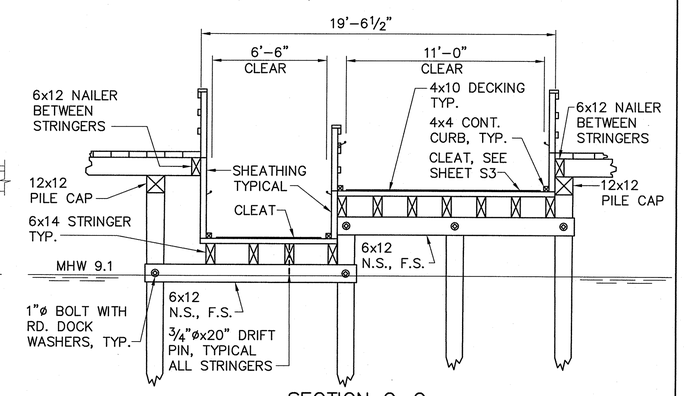

SECTION C–C

SCALE: 1/4"=1'-0"

STATE OF MAINE
DEPARTMENT OF TRANSPORTATION

APPROVED — DATE
COMMISSIONER:
CHIEF ENGINEER:

STATE OF MAINE — ROBERT E. BERTOLD — LICENSED — PROFESSIONAL ENGINEER — No. 8721

SIGNATURE
8721 — P.E. NUMBER
10/18/2011 — DATE

PROJECT INFORMATION

PROGRAM	
PROJECT MANAGER	
DESIGNER	
CONSULTANT	FAY, SPOFFORD & THORNDIKE
PROJECT RESIDENT	
CONTRACTOR	
PROJECT COMPLETION DATE	

CASCO BAY
TIMBER PIER REHABILITATION

GREAT DIAMOND ISLAND
PILE, FRAMING AND DECK PLAN

SHEET NUMBER
S5

R:\tm-091 casco bay\cadd\GDI pile plan.dwg 10/07/11 07:50 [42.94] By tripp_r

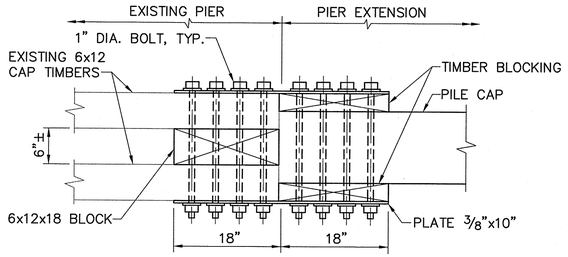

PLAN

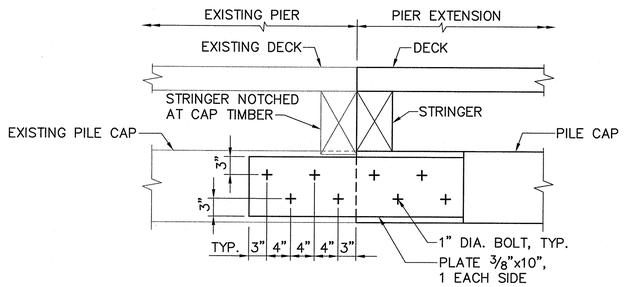

ELEVATION

PILE CAP SPLICE DETAIL

SCALE: 1"=1'-0"

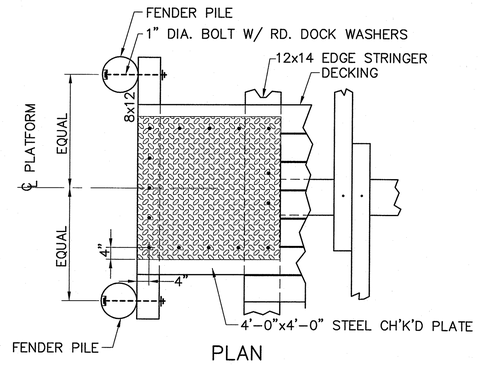

PLAN

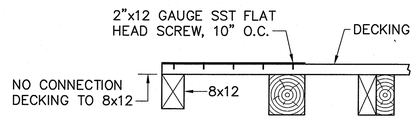

SECTION

PLATFORM DETAIL

SCALE: 1/2"=1'-0"

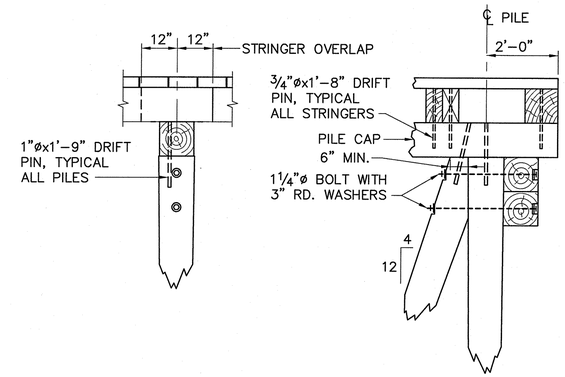

PILE, CAP & STRINGER FASTENING DETAILS

SCALE: 1/2"=1'-0"

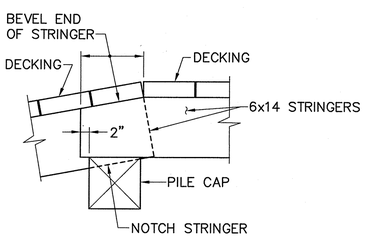

NOTE: DRIFT PINS NOT SHOWN

SECTION

TOP OF RAMP DETAIL

SCALE: 3/4"=1'-0"

STATE OF MAINE
DEPARTMENT OF TRANSPORTATION

APPROVED | DATE

COMMISSIONER:

CHIEF ENGINEER:

STATE OF MAINE ROBERT E. BERTOLINO No. 8721 LICENSED PROFESSIONAL ENGINEER

PROJECT INFORMATION

PROGRAM	
PROJECT MANAGER	
DESIGNER	
CONSULTANT	FAY, SPOFFORD & THORNDIKE
PROJECT RESIDENT	
CONTRACTOR	
PROJECT COMPLETION DATE	

SIGNATURE 8721

P.E. NUMBER 10/18/2011

DATE

CASCO BAY
TIMBER PIER REHABILITATION

GREAT DIAMOND ISLAND
PIER DETAILS – PART 1

SHEET NUMBER

S6

R:\tm-091 casco bay\cadd\GDI PIER DETS-PART1.dwg 10/07/11 07:58 [35.17] By tripp_r

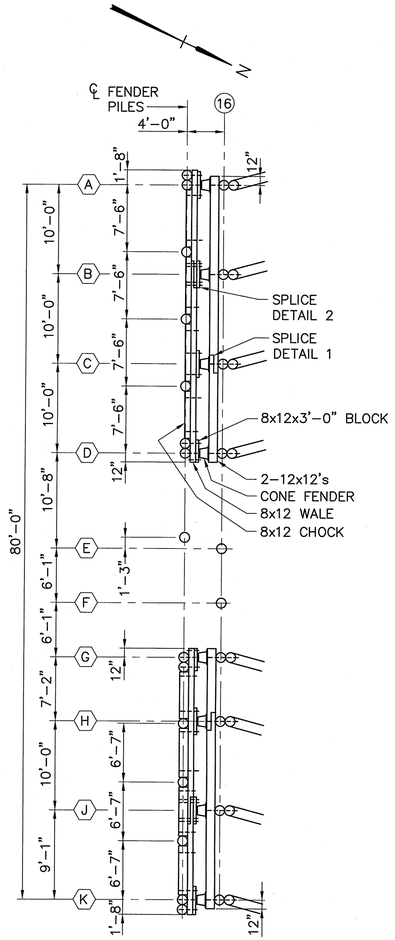

NOTES:
1. SPLICES MAY BE ELIMINATED WITH CONTINUOUS TIMBERS
2. WALES AND CHOCKS SIMILAR AT ELEVATION 1.5 AND 6.5

PLAN – FENDER SYSTEM AT ELEVATION 12.67
SCALE: 1/8"=1'-0"

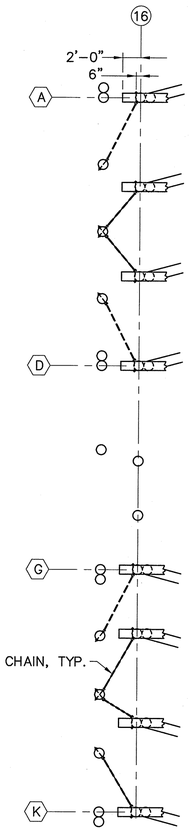

PLAN – FENDER SYSTEM AT FENDER CHAINS
SCALE: 1/8"=1'-0"

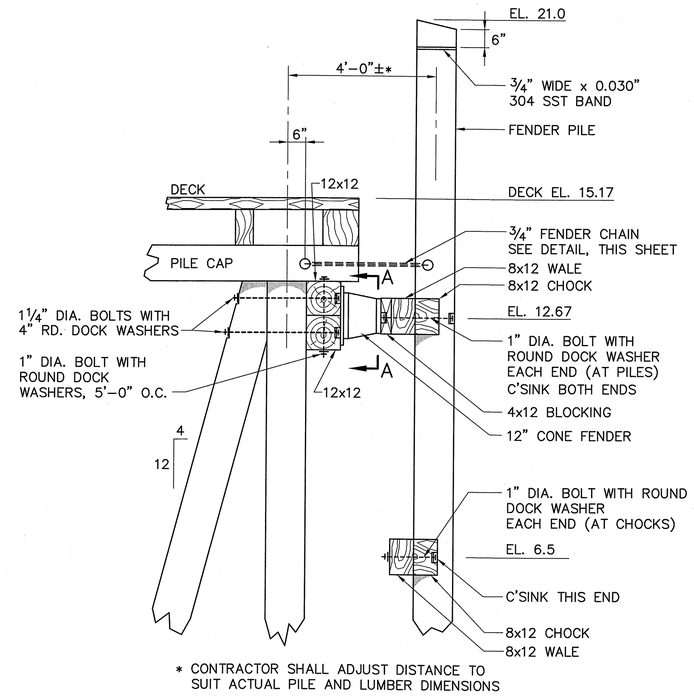

* CONTRACTOR SHALL ADJUST DISTANCE TO SUIT ACTUAL PILE AND LUMBER DIMENSIONS

TYPICAL FENDER SYSTEM SECTION
SCALE: 1/2"=1'-0"

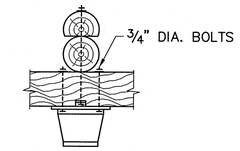

PLAN B–B
SCALE: 1/2"=1'-0"

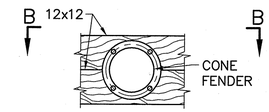

SHOWING ORIENTATION OF BOLTS

ELEVATION A–A
SCALE: 1/2"=1'-0"

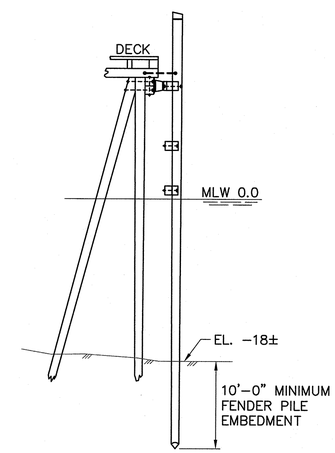

FENDER SYSTEM SECTION
SCALE: 1/8"=1'-0"

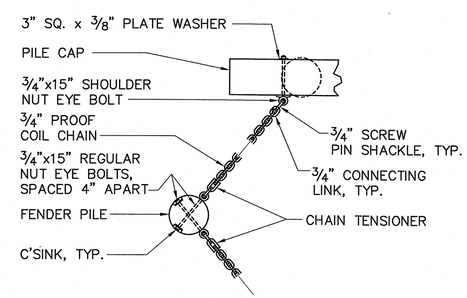

PLAN

FENDER CHAIN DETAIL
SCALE: 1/2"=1'-0"

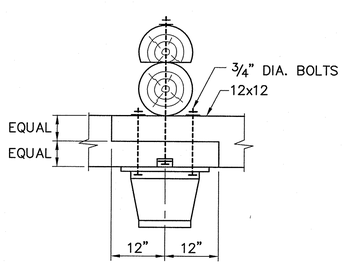

NOTE: SPLICE OF UPPER 12x12 AND LOWER 12x12 MUST BE STAGGERED

PLAN – SPLICE DETAIL 1
SCALE: 3/4"=1'-0"

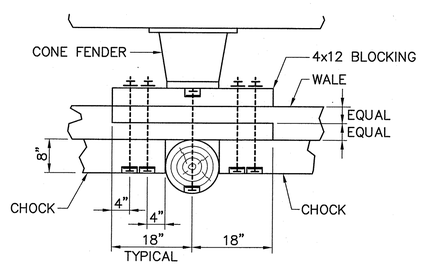

PLAN

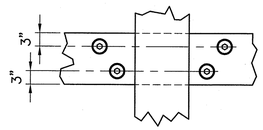

ELEVATION

NOTE: WALE SPLICE MUST BE STAGGERED FROM 12x12 SPLICES BEHIND CONE FENDER

SPLICE DETAIL 2
SCALE: 3/4"=1'-0"

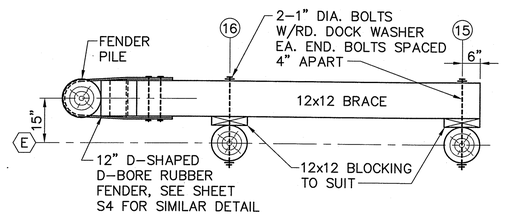

PLAN

FENDER BRACE DETAIL
SCALE: 1/2"=1'-0"

STATE OF MAINE
DEPARTMENT OF TRANSPORTATION

APPROVED | DATE
COMMISSIONER:
CHIEF ENGINEER:

STATE OF MAINE — ROBERT E. BERGELAND No. 8721 — LICENSED PROFESSIONAL ENGINEER

SIGNATURE	
8721	
P.E. NUMBER	
10/18/2011	
DATE	

PROJECT INFORMATION

PROGRAM	
PROJECT MANAGER	
DESIGNER	
CONSULTANT	FAY, SPOFFORD & THORNDIKE
PROJECT RESIDENT	
CONTRACTOR	
PROJECT COMPLETION DATE	

CASCO BAY
TIMBER PIER REHABILITATION

GREAT DIAMOND ISLAND
FENDER SYSTEM DETAILS

SHEET NUMBER
S7

R:\tm-091 casco bay\cadd\GDI fender system.dwg 09/29/11 14:32 [24.48] By tripp_r

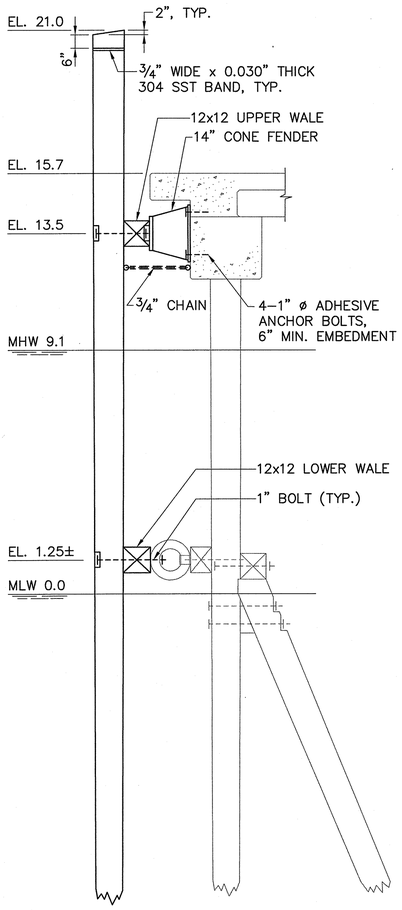

NOTE: TIMBER WAVE SCREEN NOT SHOWN

SECTION – FENDER SYSTEM

SCALE: 3/8"=1'-0"

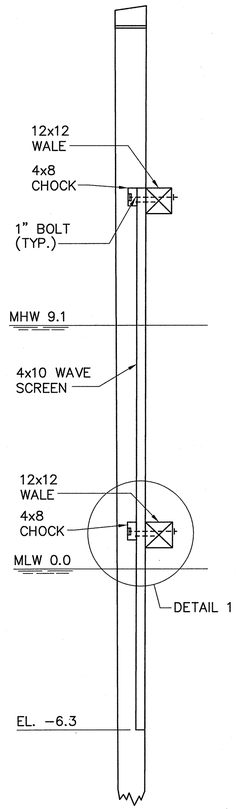

SECTION – WAVE SCREEN

SCALE: 3/8"=1'-0"

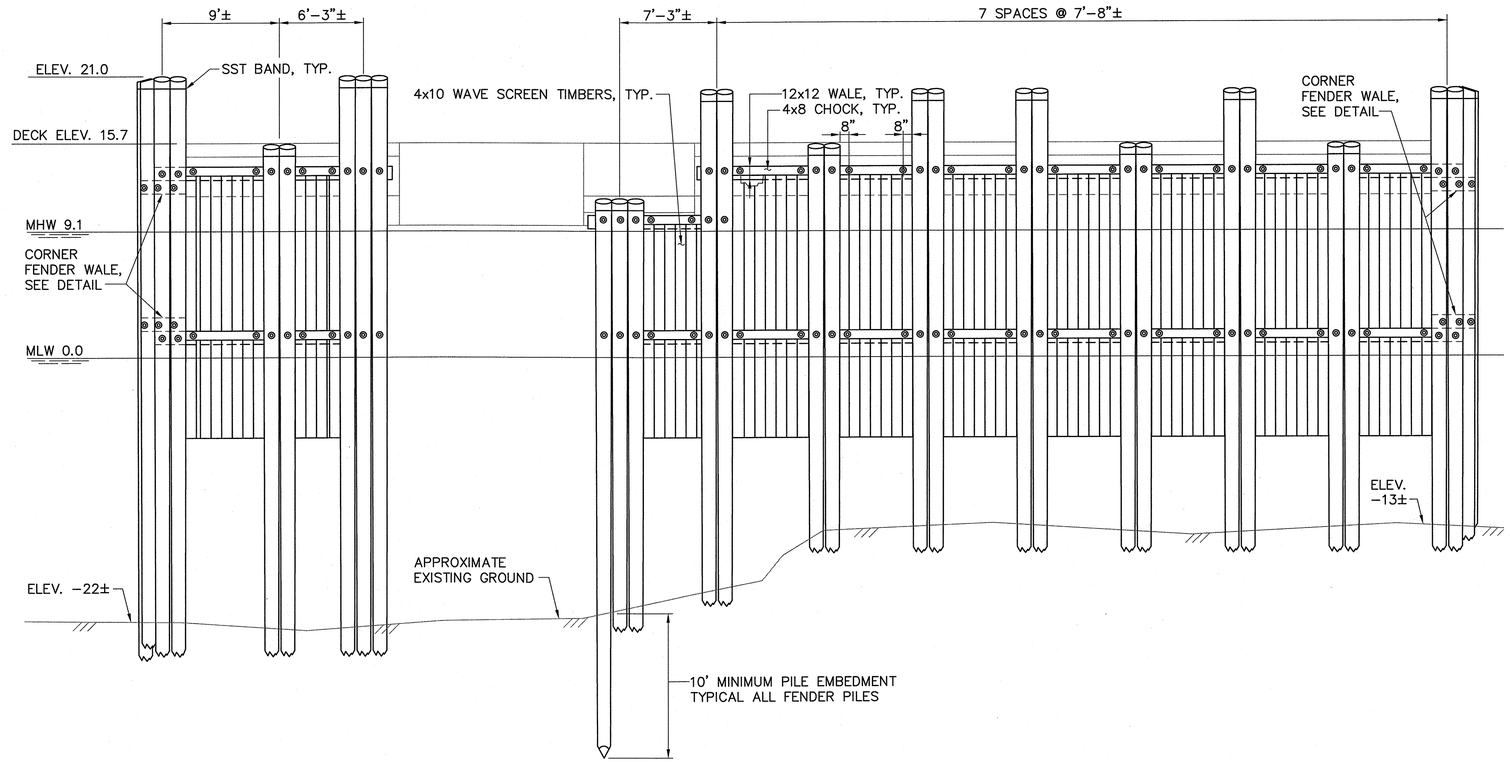

ELEVATION – FENDER SYSTEM

SCALE: 3/16"=1'-0"

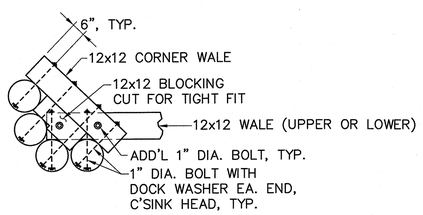

NOTE: CORNER WALE AND BLOCKING ARE BELOW THE UPPER WALE AND ABOVE THE LOWER WALE

DETAIL – CORNER FENDER WALE

SCALE: 3/8"=1'-0"

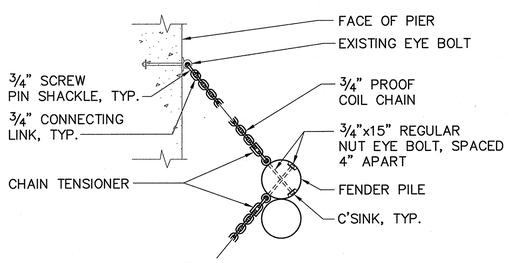

PLAN

FENDER CHAIN DETAIL

SCALE: 1/2"=1'-0"

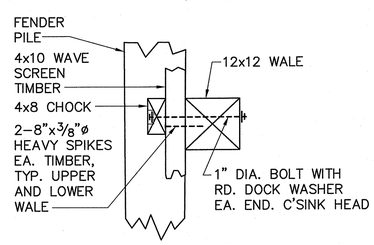

DETAIL 1

SCALE: 3/4"=1'-0"

NOTES:

1. CONTRACTOR TO MEASURE EXISTING FENDER PILE SPACING AND REPLACE IN KIND.
2. WAVE SCREEN IS EXISTING AND SHALL BE SALVAGED AND REINSTALLED ON THE NEW FENDER SYSTEM. FOR BIDDING PURPOSES, ASSUME 1,000 BOARD FEET OF WAVE SCREEN TO BE UNSALVAGEABLE.
3. MATCH EXISTING GAP BETWEEN 4x10 WAVE SCREEN TIMBERS.
4. REUSE EXISTING WALES AS DIRECTED BY THE RESIDENT. FOR BIDDING PURPOSES, ASSUME 500 BOARD FEET OF WALE TO BE REPLACED.

STATE OF MAINE
DEPARTMENT OF TRANSPORTATION

APPROVED

DATE

COMMISSIONER:

CHIEF ENGINEER:

STATE OF MAINE
ROBERT E. BERTOLINO
No. 8721
LICENSED
PROFESSIONAL ENGINEER

SIGNATURE
8721
P.E. NUMBER
10/18/2011
DATE

PROJECT INFORMATION

PROGRAM	
PROJECT MANAGER	
DESIGNER	
CONSULTANT	FAY, SPOFFORD & THORNDIKE
PROJECT RESIDENT	
CONTRACTOR	
PROJECT COMPLETION DATE	DATE

CASCO BAY
TIMBER PIER REHABILITATION

LONG ISLAND – FENDER DETAILS

SHEET NUMBER

S8

R:\tm-091 casco bay\cadd\LI FENDER.dwg 10/06/11 13:35 [24:52] By tripp_r

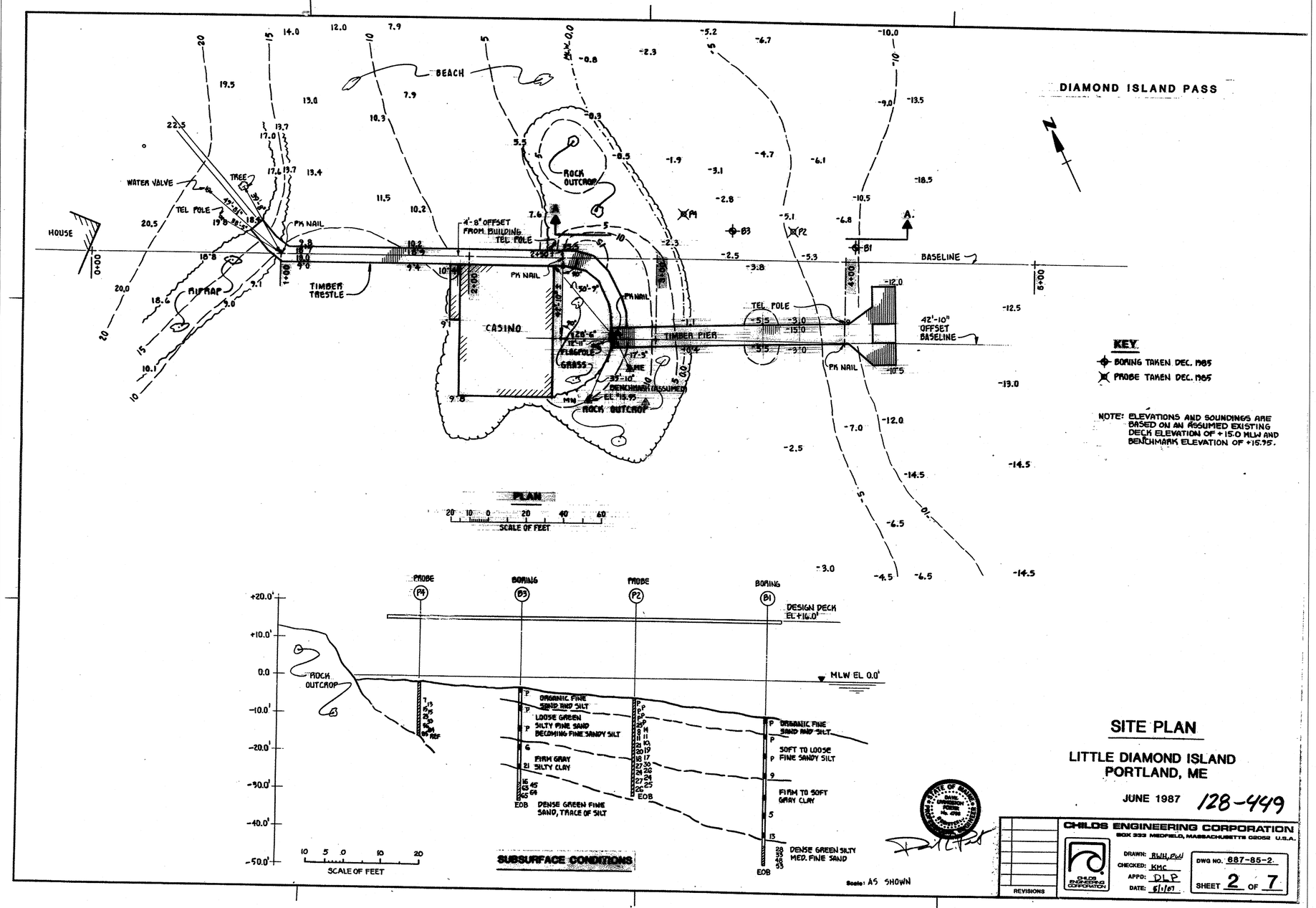

STATE OF MAINE
DEPARTMENT OF TRANSPORTATION

APPROVED | DATE
COMMISSIONER:
CHIEF ENGINEER:

PROJECT INFORMATION

PROGRAM	
PROJECT MANAGER	
DESIGNER	
CONSULTANT	FAY, SPOFFORD & THORNDIKE
PROJECT RESIDENT	
CONTRACTOR	
PROJECT COMPLETION DATE	

SIGNATURE
P.E. NUMBER
DATE

CASCO BAY
TIMBER PIER REHABILITATION

LITTLE DIAMOND ISLAND
REFERENCE DRAWING 1

SHEET NUMBER
RD1

R:\tm-091 casco bay\cadd\LDI REF DWG 1.dwg 09/29/11 09:45 [22.04] By tripp_r

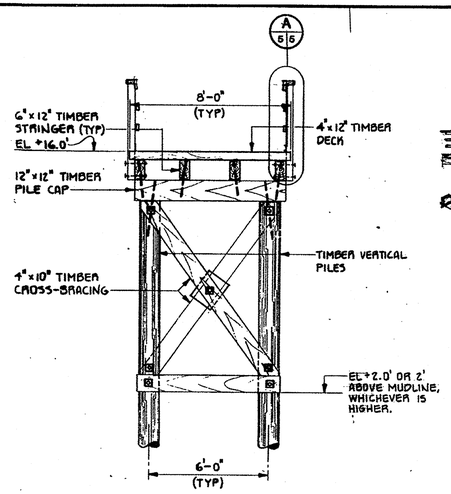

A 4/5 TYPICAL CROSS SECTION
SCALE: 3/8" = 1'-0"

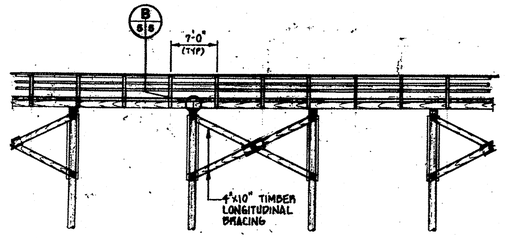

B 4/5 TYPICAL SIDE ELEVATION
SCALE: 3/8" = 1'-0"

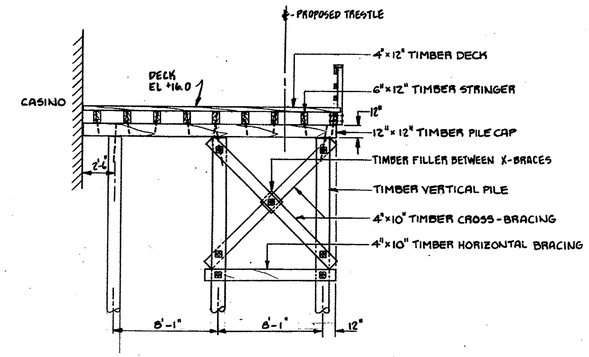

C 4/5 TYPICAL TRESTLE SECTION (AT CASINO)
SCALE: 1/4" = 1'-0"

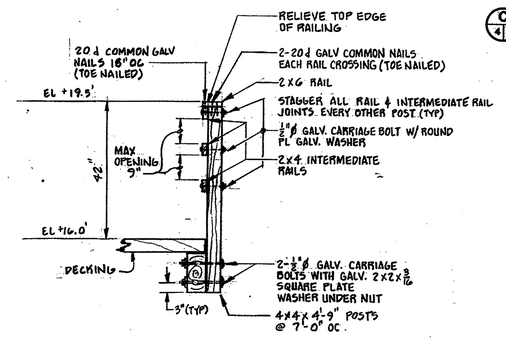

A 5/5 TRESTLE & RAIL DETAIL
SCALE: 3/4" = 1'-0"

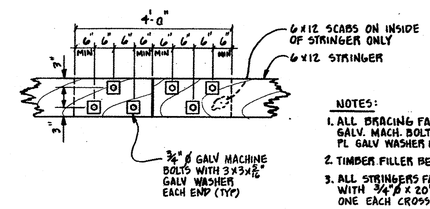

B 5/5 STRINGER SPLICE DETAIL
SCALE: 3/4" = 1'-0"

NOTES:
1. ALL BRACING FASTENED WITH 1"ϕ GALV. MACH. BOLTS W/ 4×4×3/8 SQ PL GALV WASHER EACH END EACH CROSSING.
2. TIMBER FILLER BETWEEN X-BRACES.
3. ALL STRINGERS FASTENED TO PILE CAPS WITH 3/4"ϕ × 20" BLANK BOLTS, ONE EACH CROSSING.
4. ALL PILE CAPS FASTENED TO PILES WITH 3/4"ϕ × 2'-6" BLANK BOLT, ONE EACH PILE.
5. INTERIOR STRINGERS MAY BE LAPPED AT PILE CAP. MIN OVERLAP 18". OUTSIDE STRINGERS MUST BE BUTTED AND SCABBED AT PILE CAPS.

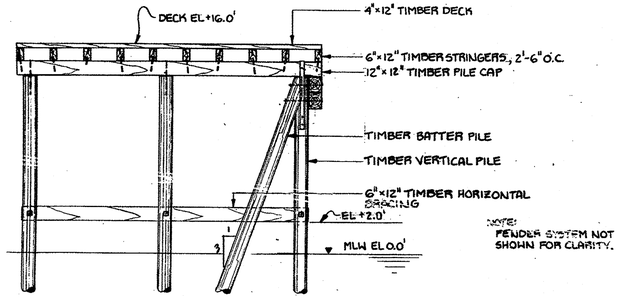

D 4/5 TYPICAL PIERHEAD SECTION
SCALE: 1/4" = 1'-0"

STRUCTURAL DETAILS

LITTLE DIAMOND ISLAND
PORTLAND, ME

JUNE 1987 128-452

STATE OF MAINE — DAVID LIVINGSTON PORTER No. 4748 — REGISTERED PROFESSIONAL ENGINEER

CHILDS ENGINEERING CORPORATION
BOX 333 MEDFIELD, MASSACHUSETTS 02052 U.S.A.

REVISIONS

DRAWN: M. FOLEY / RWH
CHECKED: KMC
APPD: DLP
DATE: 5/1/87

DWG NO. 687-85-5
SHEET 5 OF 7

STATE OF MAINE
DEPARTMENT OF TRANSPORTATION

APPROVED — DATE
COMMISSIONER:
CHIEF ENGINEER:

PROJECT INFORMATION
PROGRAM
PROJECT MANAGER
DESIGNER
CONSULTANT: FAY, SPOFFORD & THORNDIKE
PROJECT RESIDENT
CONTRACTOR
PROJECT COMPLETION DATE

SIGNATURE
P.E. NUMBER
DATE

CASCO BAY
TIMBER PIER REHABILITATION

LITTLE DIAMOND ISLAND
REFERENCE DRAWING 2

SHEET NUMBER
RD2

R:\tm-091 casco bay\cadd\LDI REF DWG 2.dwg 09/29/11 09:46 [21.65] By tripp_r

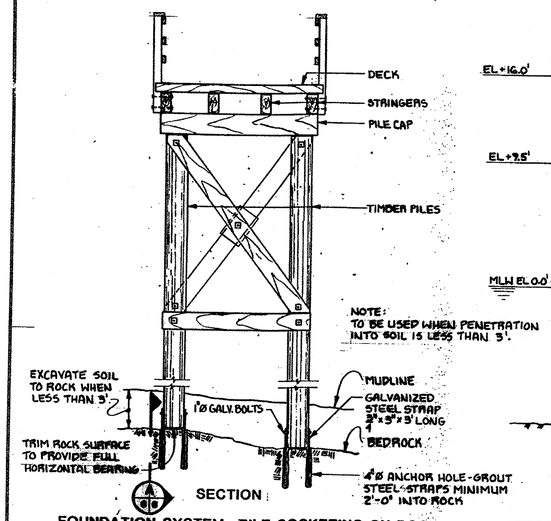

FOUNDATION SYSTEM- PILE SOCKETING ON ROCK
SCALE: 3/8"=1'-0"

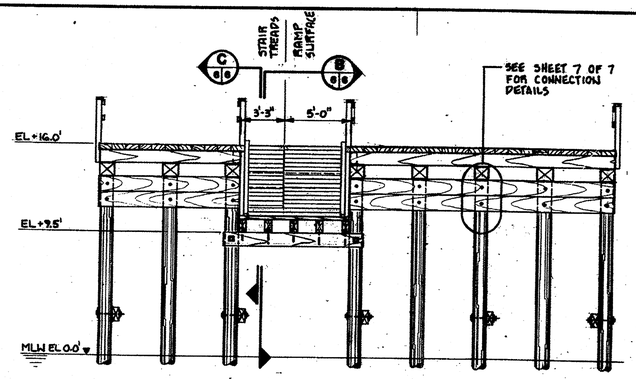

A 7/6 ELEVATION PASSENGER RAMP
SCALE: 1/4"=1'-0"

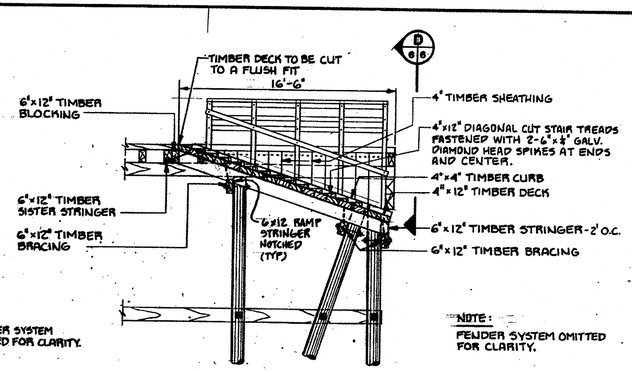

B 6/6 SECTION - PASSENGER RAMP
SCALE: 1/4"=1'-0"

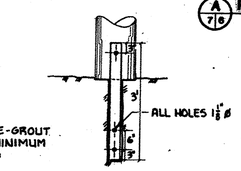

A 6/6 DETAIL - STEEL ANCHOR STRAP
SCALE: 3/4"=1'-0"

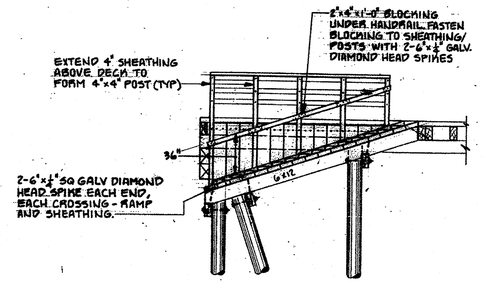

C 6/6 SECTION - PASSENGER RAMP
SCALE: 1/4"=1'-0"

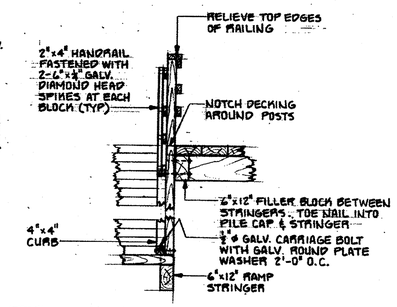

D 6/6 DETAIL - RAMP HANDRAIL CONNECTION
SCALE: 1/2"=1'-0"

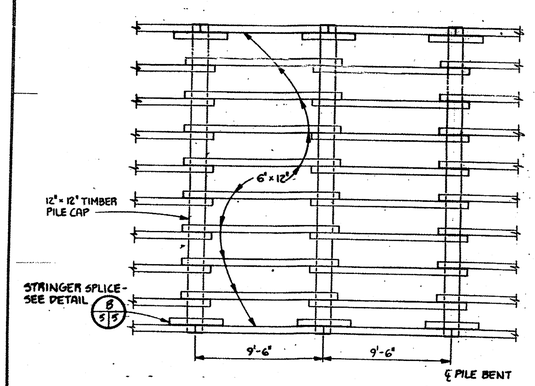

PIERHEAD
STRINGER PLAN - TYPICAL
SCALE: 1/4"=1'-0"

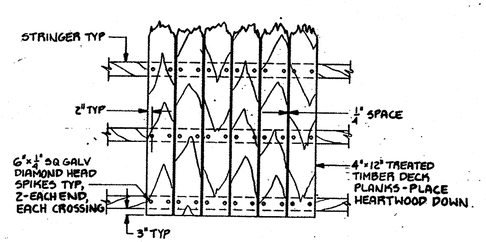

DECKING PLAN - TYPICAL
SCALE: 1/2"=1'-0"

NOTE:
SEE SHEET 5 OF 7 FOR NOTES ON ALL STANDARD FASTENERS REQUIRED.

MISCELLANEOUS DETAILS

LITTLE DIAMOND ISLAND
PORTLAND, ME

JUNE 1987 128-453

STATE OF MAINE DAVID LUNDQUIST PORTLAND No. 4710 PROFESSIONAL ENGINEER

REVISIONS	CHILDS ENGINEERING CORPORATION BOX 333 MEDFIELD, MASSACHUSETTS 02052 U.S.A.	
	DRAWN: RWH, RW CHECKED: KMC APPD: DLP DATE: 5/1/87	DWG NO. 687-85-6 SHEET 6 OF 7

STATE OF MAINE
DEPARTMENT OF TRANSPORTATION

		DATE
APPROVED		
COMMISSIONER:		
CHIEF ENGINEER:		

PROJECT INFORMATION

PROGRAM		SIGNATURE	
PROJECT MANAGER			
DESIGNER		P.E. NUMBER	
CONSULTANT	FAY, SPOFFORD & THORNDIKE		
PROJECT RESIDENT		DATE	
CONTRACTOR			
PROJECT COMPLETION DATE			

CASCO BAY
TIMBER PIER REHABILITATION

LITTLE DIAMOND ISLAND
REFERENCE DRAWING 3

SHEET NUMBER
RD3

R:\tm-091 casco bay\cadd\LDI REF DWG 3.dwg 09/29/11 09:46 [23.84] By tripp_r

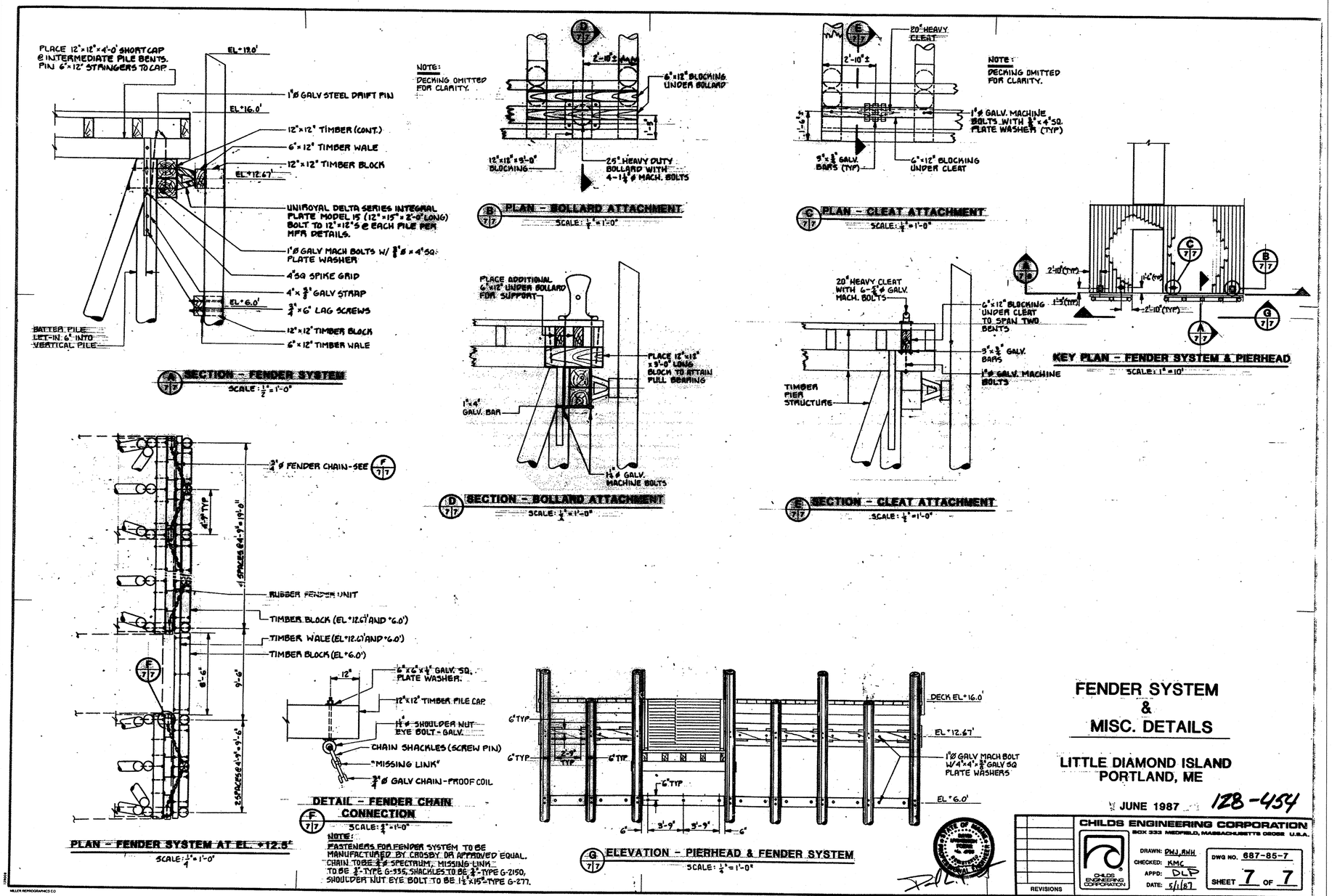

STATE OF MAINE
DEPARTMENT OF TRANSPORTATION

APPROVED | DATE
COMMISSIONER:
CHIEF ENGINEER:

PROJECT INFORMATION

PROGRAM	
PROJECT MANAGER	
DESIGNER	
CONSULTANT	FAY, SPOFFORD & THORNDIKE
PROJECT RESIDENT	
CONTRACTOR	
PROJECT COMPLETION DATE	

SIGNATURE
P.E. NUMBER
DATE

CASCO BAY
TIMBER PIER REHABILITATION

LITTLE DIAMOND ISLAND
REFERENCE DRAWING 4

SHEET NUMBER
RD4

R:\tm-091 casco bay\cadd\LDI REF DWG 4.dwg 09/29/11 09:46 [21.75] By tripp_r

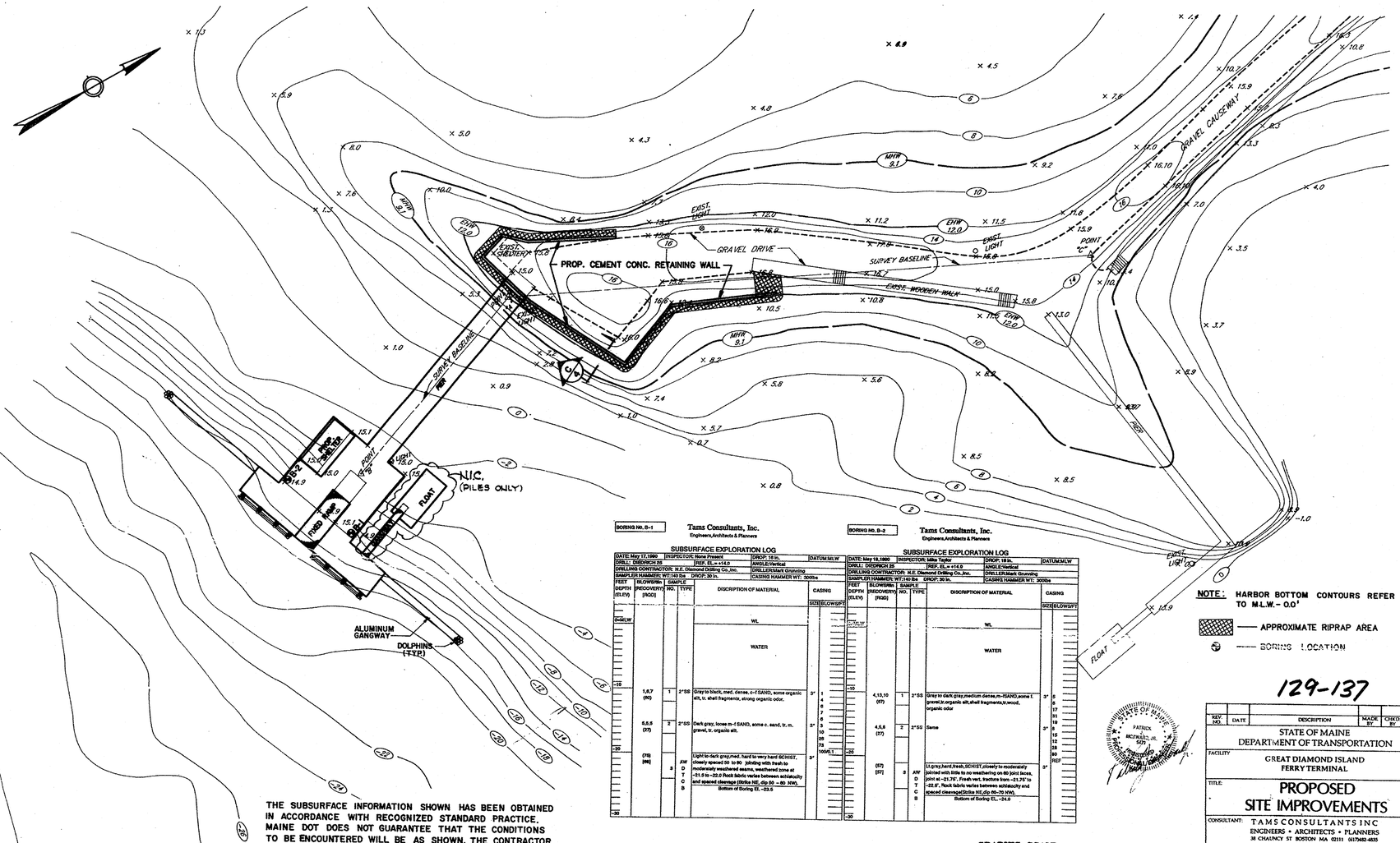

THE SUBSURFACE INFORMATION SHOWN HAS BEEN OBTAINED IN ACCORDANCE WITH RECOGNIZED STANDARD PRACTICE. MAINE DOT DOES NOT GUARANTEE THAT THE CONDITIONS TO BE ENCOUNTERED WILL BE AS SHOWN. THE CONTRACTOR SHALL PERFORM THE WORK IN ACCORDANCE WITH CONTRACT DOCUMENTS REGARDLESS OF CONDITIONS ENCOUNTERED.

BORING No. B-1

Tams Consultants, Inc.
Engineers, Architects & Planners

SUBSURFACE EXPLORATION LOG

DATE: May 17, 1990	INSPECTOR: Steve Prasnek	DROP: 18 in.	DATUM: MLW
DRILL: DIEDRICH D5	REF. EL.= +14.0	ANGLE: Vertical	
DRILLING CONTRACTOR: M.E. Diamond Drilling Co. Inc.		DRILLER: Mark Gruneing	
SAMPLER HAMMER: WT.: 140 lbs	DROP: 30 in.	CASING HAMMER WT.: 300lbs	

FEET DEPTH (ELEV)	BLOWS/6in (RECOVERY) (RQD)	SAMPLE NO.	TYPE	DESCRIPTION OF MATERIAL	CASING SIZE	BLOWS/FT
0=MLW				WL		
				WATER		
-10						
	1,6,7 (50)	1	2"SS	Gray to black, med. dense, c-f SAND, some organic silt, tr. shell fragments, strong organic odor.	3"	1 4 6 7 8 5 5 10 25 75 100/0.1
	5,5,5 (27)	2	2"SS	Dark gray, loose m-f SAND, some c. sand, tr. m. gravel, tr. organic silt.	3"	
-20						
	(75) [88]	3	AW D T C B	Light to dark gray,med. hard to very hard SCHIST, closely spaced 50 to 90 Joinding with fresh to moderately weathered seams, weathered zone at ~21.8 to ~22.0 Rock fabric varies between schistosity and spaced cleavage (Strike NE, dip 50 - 80 NW). Bottom of Boring EL. -23.5	3"	
-30						

BORING No. B-2

Tams Consultants, Inc.
Engineers, Architects & Planners

SUBSURFACE EXPLORATION LOG

DATE: May 18, 1990	INSPECTOR: Mike Taylor	DROP: 18 in.	DATUM: MLW
DRILL: DIEDRICH D5	REF. EL.= +14.0	ANGLE: Vertical	
DRILLING CONTRACTOR: M.E. Diamond Drilling Co. Inc.		DRILLER: Mark Gruneing	
SAMPLER HAMMER: WT.: 140 lbs	DROP: 30 in.	CASING HAMMER WT.: 300lbs	

FEET DEPTH (ELEV)	BLOWS/6in (RECOVERY) (RQD)	SAMPLE NO.	TYPE	DESCRIPTION OF MATERIAL	CASING SIZE	BLOWS/FT
0=MLW				WL		
				WATER		
-10						
	4,13,10 (07)	1	2"SS	Grey to dark gray,medium dense,m-fSAND,some f. gravel,tr.organic silt,shell fragments,tr.wood, organic odor	3"	5 6 17 31 19
	4,5,8 (27)	2	2"SS	Same	3"	16 12 28 20 REF
-20						
	(57) [57]	3	AW D T C B	Lt.gray,hard,fresh,SCHIST,closely to moderately jointed with little to no weathering on 60 joint faces, joint at ~21.76', Fresh vert. fractura bien ~21.76' to ~22.8', Rock fabric varies between schistosity and spaced cleavage(Strike NE,dip 60-70 NW). Bottom of Boring EL. -24.0	3"	
-30						

GRAPHIC SCALE

20 0 10 20 40 60

(IN FEET)
1 inch = 20 ft.

NOTE: HARBOR BOTTOM CONTOURS REFER TO M.L.W. - 0.0'

APPROXIMATE RIPRAP AREA

BORING LOCATION

129-137

REV. NO.	DATE	DESCRIPTION	MADE BY	CHK'D BY	APV'D BY

STATE OF MAINE
DEPARTMENT OF TRANSPORTATION

FACILITY: GREAT DIAMOND ISLAND FERRY TERMINAL

TITLE: PROPOSED SITE IMPROVEMENTS

CONSULTANT: TAMS CONSULTANTS INC
ENGINEERS • ARCHITECTS • PLANNERS
38 CHAUNCY ST BOSTON MA 02111 (617)482-4835

DES: WJP CHK: TPD DR: WJP
SCALE: AS NOTED DATE: JAN 1991
APPROVED BY BUREAU OF TRANSPORTATION SERVICES: TPD
SHEET 3 OF 11

STATE OF MAINE
DEPARTMENT OF TRANSPORTATION

APPROVED

COMMISSIONER: DATE

CHIEF ENGINEER:

PROJECT INFORMATION

PROGRAM	
PROJECT MANAGER	SIGNATURE
DESIGNER	
CONSULTANT	FAY, SPOFFORD & THORNDIKE P.E. NUMBER
PROJECT RESIDENT	
CONTRACTOR	DATE
PROJECT COMPLETION DATE	

CASCO BAY
TIMBER PIER REHABILITATION

GREAT DIAMOND ISLAND
REFERENCE DRAWING 1

SHEET NUMBER
RD5

R:\tm-091 casco bay\cadd\GDI REF DWG 1.dwg 09/29/11 09:43 [22.04] By tripp_r

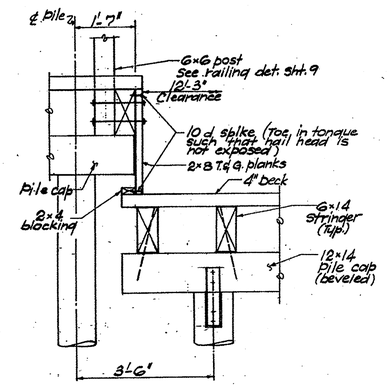

B/7 SECTION
SCALE: 3/4"=1'-0"

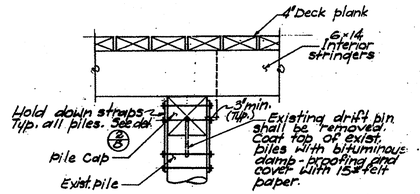

C/7 SECTION
SCALE: 3/4"=1'-0"

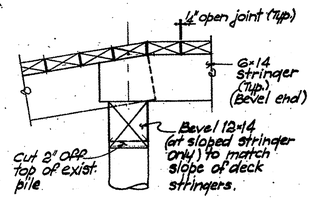

G/7 SECTION
SCALE: 3/4"=1'-0"

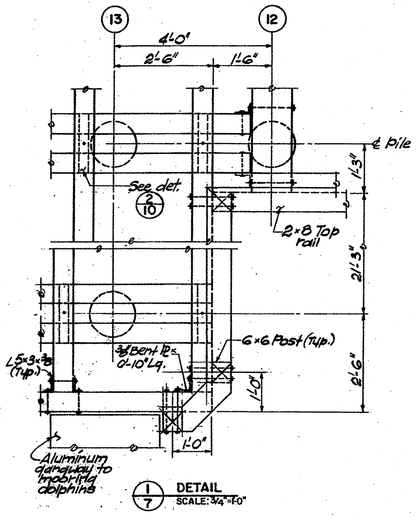

I/7 DETAIL
SCALE: 3/4"=1'-0"

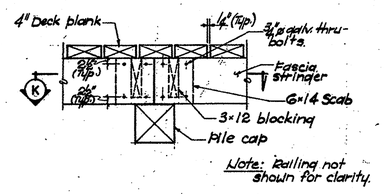

D/7 SECTION
SCALE: 3/4"=1'-0"

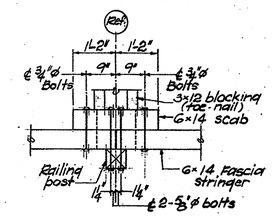

K SECTION
SCALE: 3/4"=1'-0"

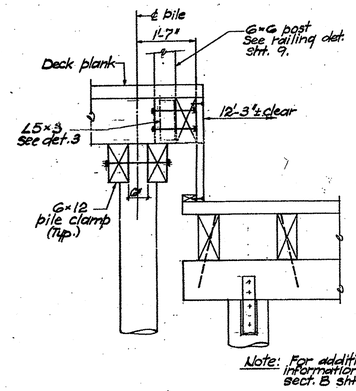

A/7 SECTION
SCALE: 3/4"=1'-0"

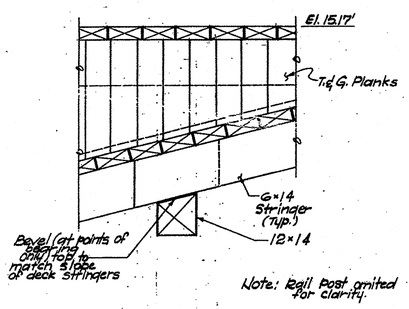

E/7 SECTION
SCALE: 3/4"=1'-0"

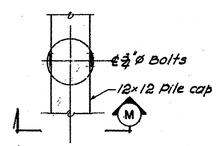

F/7 DETAIL
SCALE: 3/4"=1'-0"

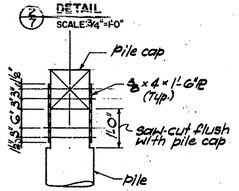

M SECTION
SCALE: 3/4"=1'-0"

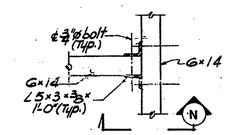

J/7 DETAIL
SCALE: 3/4"=1'-0"

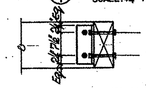

N SECTION
SCALE: 3/4"=1'-0"

Note:
Typical at all similar conditions.

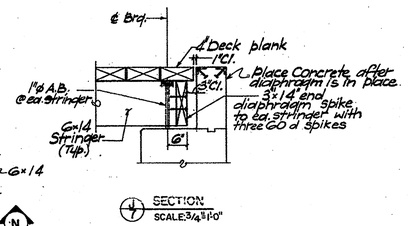

H/7 SECTION
SCALE: 3/4"=1'-0"

129-142

REV. NO.	DATE	DESCRIPTION	MADE BY	CHKD. BY	APPD. BY

STATE OF MAINE
DEPARTMENT OF TRANSPORTATION

FACILITY: GREAT DIAMOND ISLAND FERRY TERMINAL

TITLE: PIER DETAILS

CONSULTANT: TAMS CONSULTANTS INC
ENGINEERS • ARCHITECTS • PLANNERS
38 CHAUNCY ST BOSTON MA 02111 617/482-4455

DES: WBS | CHK: TPD | DR: SZ
SCALE: AS NOTED | DATE: JAN 1991
APPROVED BY BUREAU OF TRANSPORTATION SERVICES: PDP
SHEET 8 OF 11

STATE OF MAINE
DEPARTMENT OF TRANSPORTATION
APPROVED | DATE
COMMISSIONER:
CHIEF ENGINEER:

PROJECT INFORMATION
PROGRAM
PROJECT MANAGER
DESIGNER
CONSULTANT: FAY, SPOFFORD & THORNDIKE
PROJECT RESIDENT
CONTRACTOR
PROJECT COMPLETION DATE

SIGNATURE
P.E. NUMBER
DATE

CASCO BAY
TIMBER PIER REHABILITATION

GREAT DIAMOND ISLAND
REFERENCE DRAWING 2

SHEET NUMBER
RD6

R:\tm-091 casco bay\cadd\GDI REF DWG 2.dwg 09/29/11 08:43 [21.81] By tripp_r

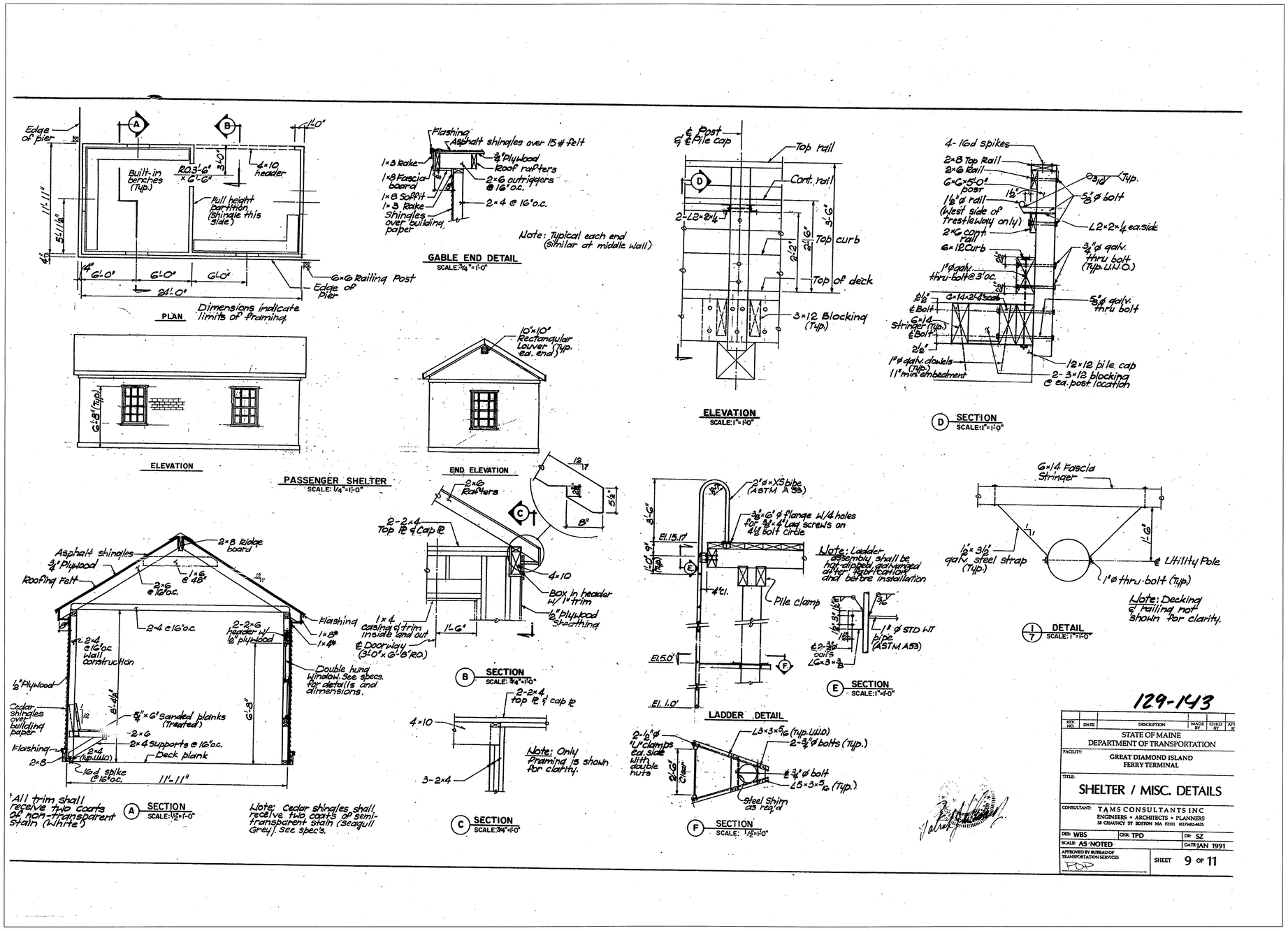

STATE OF MAINE
DEPARTMENT OF TRANSPORTATION

APPROVED | DATE
COMMISSIONER:
CHIEF ENGINEER:

PROJECT INFORMATION

PROGRAM	
PROJECT MANAGER	
DESIGNER	
CONSULTANT	FAY, SPOFFORD & THORNDIKE
PROJECT RESIDENT	
CONTRACTOR	
PROJECT COMPLETION DATE	

SIGNATURE
P.E. NUMBER
DATE

CASCO BAY
TIMBER PIER REHABILITATION

GREAT DIAMOND ISLAND
REFERENCE DRAWING 3

SHEET NUMBER
RD7

22 OF 24

R:\tm-091 casco bay\cadd\GDI REF DWG 3.dwg 09/29/11 09:43 [21.84] By tripp_r

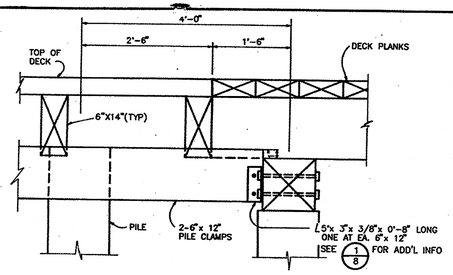

A/7 SECTION
SCALE 1"=1'-0"

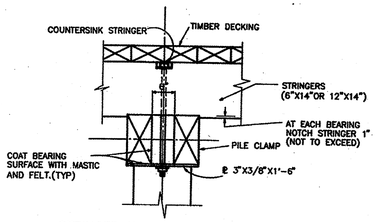

2/7 STRINGER FASTENING DETAIL
(TYPICAL FOR EACH INTERSECTION)
SCALE 1"=1'-0"

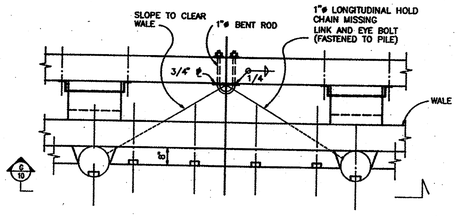

F/10 SECTION
SCALE 1/2"=1'-0"
(GALVANIZED STEEL CHECKERED ℄ NOT SHOWN FOR CLARITY)

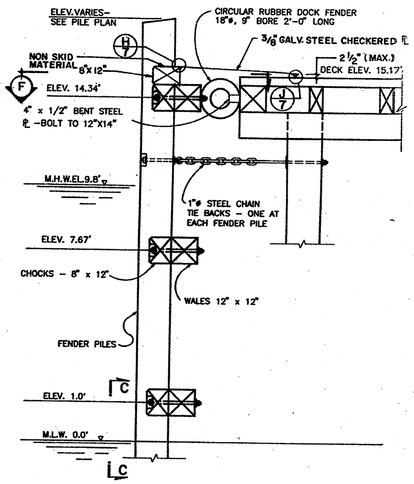

D/7 SHIP FENDERS
SCALE 1/2"=1'-0"

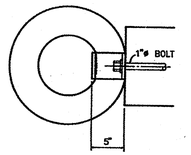

E/10 SECTION B–B
SCALE 1-1/2"=1'-0"

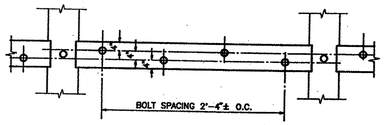

G/10 SECTION
SCALE 1/2"=1'-0"

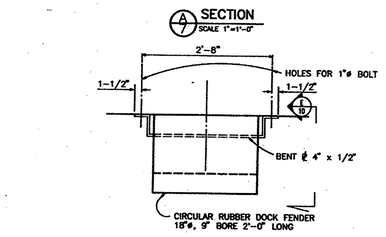

1/7 FASTENING FOR RUBBER DOCK FENDER
SCALE 1"=1'-0"

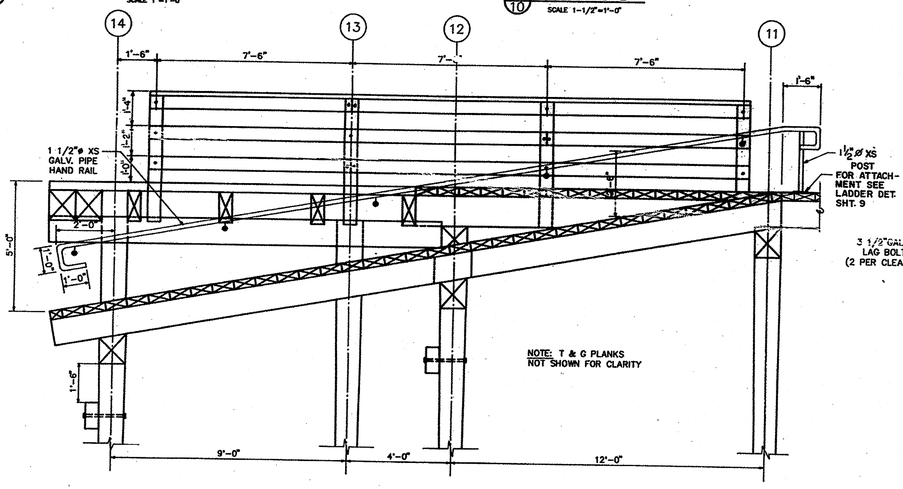

B/11 B/7 LONGITUDINAL SECTION THROUGH RAMP
SCALE 1/2"=1'-0"

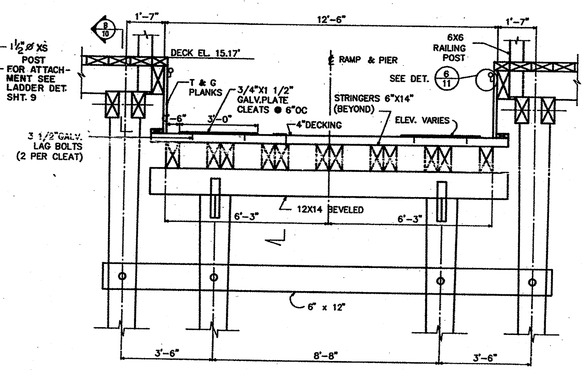

C/7 SECTION THROUGH RAMP
SCALE 1/2"=1'-0"

129-144

REV. NO.	DATE	DESCRIPTION	MADE BY	CHK'D BY

STATE OF MAINE
DEPARTMENT OF TRANSPORTATION

FACILITY: GREAT DIAMOND ISLAND FERRY TERMINAL

TITLE: **FENDER SYSTEM/. RAMP**

CONSULTANT: TAMS CONSULTANTS INC
ENGINEERS + ARCHITECTS + PLANNERS
38 CHAURCY ST BOSTON MA 02111 617/542-6025

DES: JP CHK: IG DR: SZ
SCALE: AS NOTED DATE: JAN 1991
APPROVED BY BUREAU OF TRANSPORTATION SERVICES
SHEET 10 OF 11

STATE OF MAINE
DEPARTMENT OF TRANSPORTATION
APPROVED
DATE
COMMISSIONER:
CHIEF ENGINEER:

PROJECT INFORMATION

PROGRAM	
PROJECT MANAGER	
DESIGNER	
CONSULTANT	FAY, SPOFFORD & THORNDIKE
PROJECT RESIDENT	
CONTRACTOR	
PROJECT COMPLETION DATE	

SIGNATURE
P.E. NUMBER
DATE

CASCO BAY
TIMBER PIER REHABILITATION

GREAT DIAMOND ISLAND
REFERENCE DRAWING 4

SHEET NUMBER
RD8
23 OF 24

R:\tm-091 casco bay\cadd\GDI REF DWG 4.dwg 09/29/11 09:43 [21.87] By tripp_r

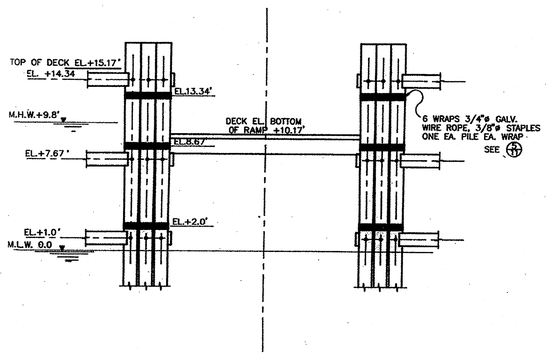

C/7 ELEVATION
SCALE 1/4"=1'-0"

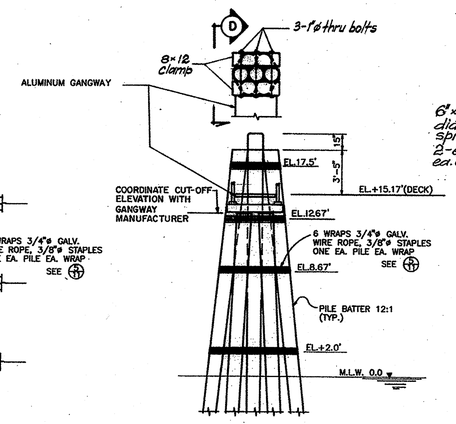

TIMBER MOORING DOLPHIN
SCALE 1/4"=1'-0"

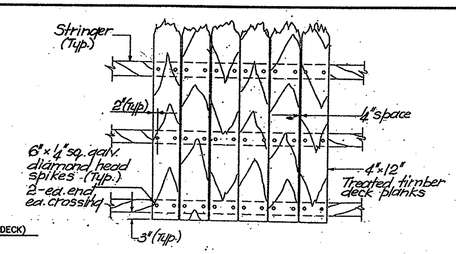

DECKING PLAN - TYPICAL
SCALE: 1/2"=1'-0"

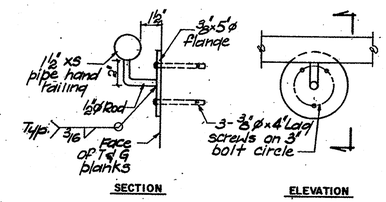

6/10 DETAIL
SCALE 3"=1'-0"

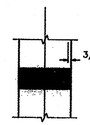

5/11 DETAIL
N.T.S.

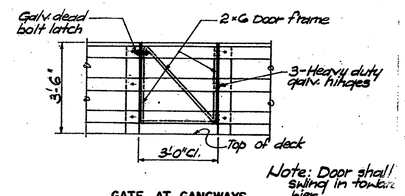

GATE AT GANGWAYS
SCALE: 1/2"=1'-0"

Note: Door shall swing in toward pier.

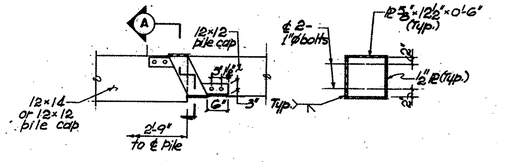

4/7 DETAIL
SCALE: 3/4"=1'-0"

A SECTION
SCALE: 3/4"=1'-0"

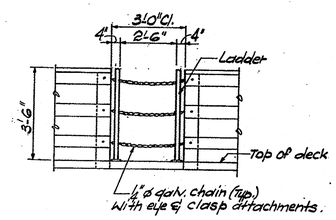

OPENING AT LADDER
SCALE: 1/2"=1'-0"

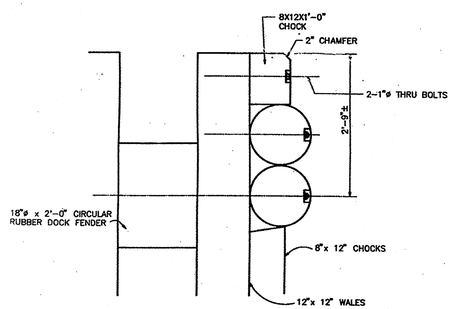

7/7 END DETAIL - FENDER SYSTEM
SCALE 1"=1'-0"

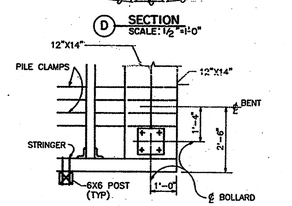

D SECTION
SCALE: 1/2"=1'-0"

3/7 BOLLARD CONNECTION DETAIL (TYP)
SCALE 1/2"=1'-0"

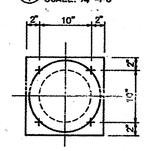

PLAN

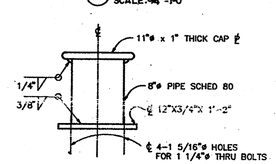

ELEVATION

2/7 BOLLARD DETAIL
SCALE 1-1/2"=1'-0"

129-145

REV. NO.	DATE	DESCRIPTION	MADE BY	CHKD BY	APPD BY

STATE OF MAINE
DEPARTMENT OF TRANSPORTATION

FACILITY: GREAT DIAMOND ISLAND FERRY TERMINAL

TITLE: FENDER SYSTEM DETAILS

CONSULTANT: TAMS CONSULTANTS INC
ENGINEERS • ARCHITECTS • PLANNERS
38 CHAUNCY ST BOSTON MA 02111 (617)482-4035

DES: JP | CHK: IG | DR: NYO
SCALE: AS NOTED | DATE: JAN 1991
APPROVED BY BUREAU OF TRANSPORTATION SERVICES: PDP
SHEET 11 OF 11

TM-091

STATE OF MAINE
DEPARTMENT OF TRANSPORTATION
APPROVED | DATE
COMMISSIONER:
CHIEF ENGINEER:

PROJECT INFORMATION

PROGRAM	
PROJECT MANAGER	
DESIGNER	
CONSULTANT	FAY, SPOFFORD & THORNDIKE
PROJECT RESIDENT	
CONTRACTOR	
PROJECT COMPLETION DATE	

SIGNATURE
P.E. NUMBER
DATE

CASCO BAY
TIMBER PIER REHABILITATION

GREAT DIAMOND ISLAND
REFERENCE DRAWING 5

SHEET NUMBER
RD9

R:\tm-091 casco bay\cadd\GDI REF DWG 5.dwg 09/29/11 09:44 [22.20] By tripp_r