STATE OF MAINE
DEPARTMENT OF TRANSPORTATION

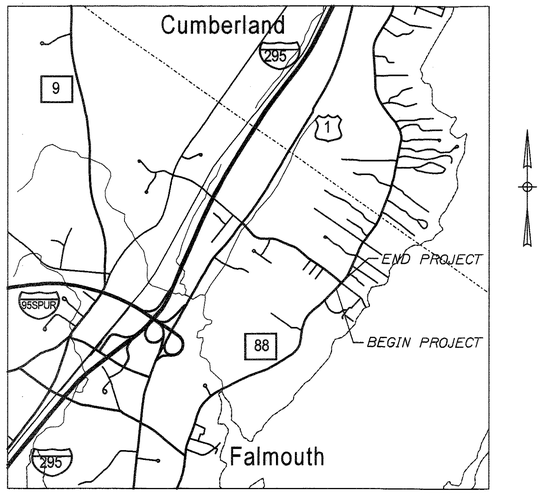

LOCATION MAP

2 0 2 4
Scale in Miles

FALMOUTH
CUMBERLAND COUNTY
STATE ROUTE 88
STP-1733(100)X
PROJECT LENGTH : 0.14 mi.
SIDEWALK IMPROVEMENTS

INDEX OF SHEETS

Description	Sheet No.
Title Sheet	1
Typical Sections	2
Earthwork Summary	3
General Notes	4
Plan	5
Cross Sections	6 - 8

SHEET 5 (TOP) SHEET 5 (BOTTOM)

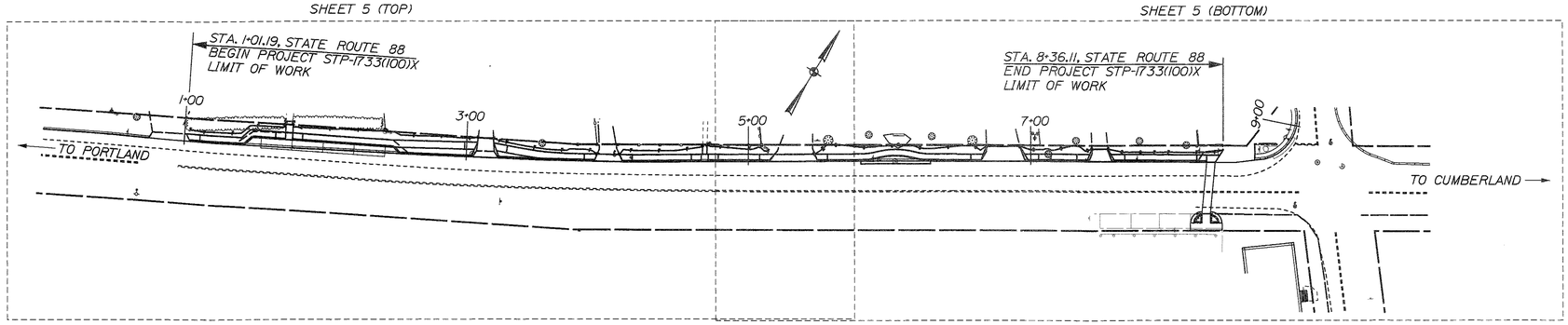

TRAFFIC DATA

Current (Est. 2011) AADT 3740
Design Speed (mph) 35

LAYOUT SCALE

50 0 50 100
Scale in Feet

STP-1733(100)X PIN 17331.00

TY·LIN INTERNATIONAL

STATE OF MAINE
DEPARTMENT OF TRANSPORTATION
APPROVED
DATE
COMMISSIONER: 5/8/11
CHIEF ENGINEER: 5-4-11

STATE OF MAINE DARIN W. BRYANT No. 6653 PROFESSIONAL ENGINEER

PROJECT INFORMATION	
PROGRAM	MULTI-MODAL
PROJECT MANAGER	DWB
DESIGNER	TSK
CONSULTANT	T.Y.LIN INTERNATIONAL
PROJECT RESIDENT	
CONTRACTOR	
PROJECT COMPLETION DATE	

SIGNATURE 6653 P.E. NUMBER
4/29/2011 DATE

FALMOUTH
STATE ROUTE 88 SIDEWALK
TITLE SHEET

SHEET NUMBER
1
OF 8

Filename: ...\HIGHWAY\MSTA\001_Title.dgn Division: HIGHWAY Username: pmcclure Date:4/29/2011

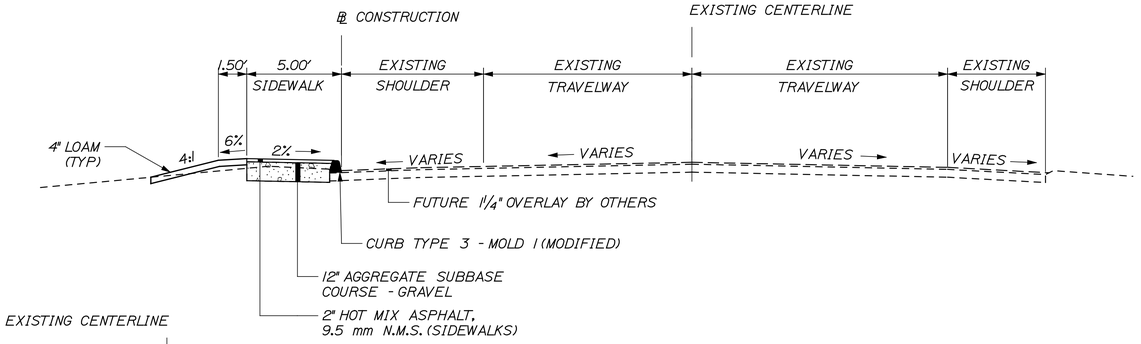

STATE ROUTE 88 SIDEWALK TYPICAL SECTION

STATION TO STATION
1+01.19 TO 1+48.33
2+48.38 TO 8+91.80

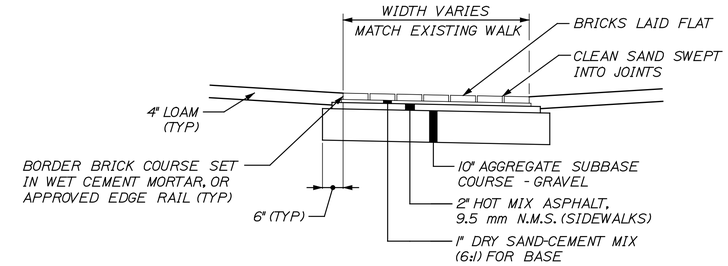

BRICKS TO BE USED:

BRICKS SHALL MEET MAINE DEPARTMENT OF TRANSPORTATION STANDARD SPECIFICATIONS SECTION 704.02 AND SHALL MATCH THE EXISTING BRICKS AS CLOSELY AS POSSIBLE. FINAL BRICK SELECTION TO BE APPROVED BY THE RESIDENT.

ITEM 608.15 BRICK WALK WITH BITUMINOUS BASE

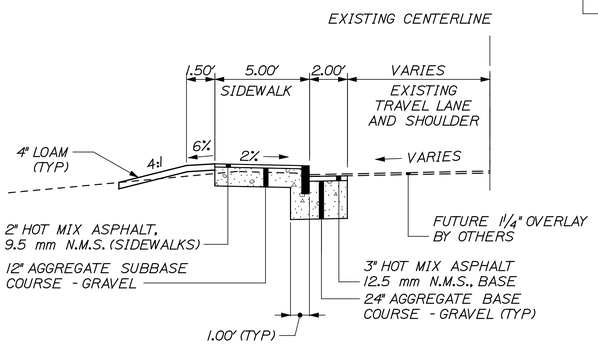

NOTE:

CURB TYPE 1 SHALL BE SET 1¼" HIGHER THAN SHOWN ON MAINE DEPARTMENT OF TRANSPORTATION STANDARD DETAILS TO ACCOMMODATE THE FUTURE 1¼" OVERLAY BY OTHERS (EXCEPT STA 1+42.50 TO 2+52.62 WHERE CURB SHALL BE SET AT STANDARD HEIGHT).

BID OPTION #2

STATION TO STATION
1+01.19 TO 8+24.51 LT

BID OPTION #2 REPLACES THE CURB TYPE 3 ALONG THE SIDEWALK WITH CURB TYPE 1. SEE BID BOOK FOR REVISED QUANTITIES.

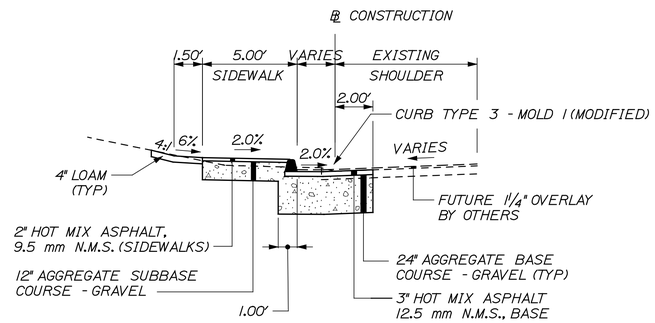

STATION 5+79.63 TO 6+28.97

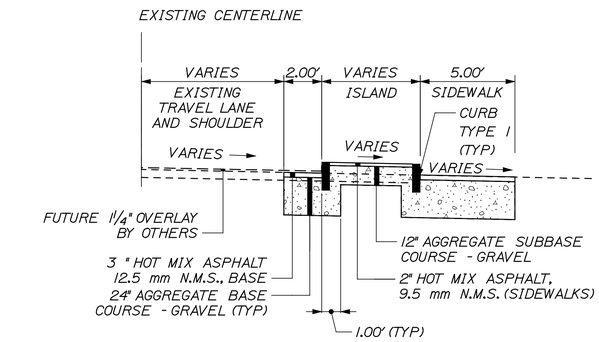

NOTE:

CURB TYPE 1 SHALL BE SET 1¼" HIGHER THAN SHOWN ON MAINE DEPARTMENT OF TRANSPORTATION STANDARD DETAILS TO ACCOMMODATE THE FUTURE 1¼" OVERLAY BY OTHERS.

ISLAND

STATION TO STATION
8+13.10 TO 8+21.44 RT
8+27.44 TO 8+33.01 RT

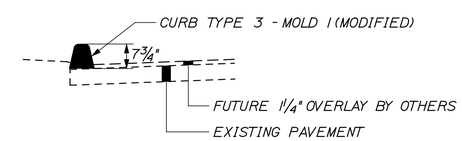

NOTE:

MAINE DEPARTMENT OF TRANSPORTATION STANDARD DETAILS SHOW CURB HEIGHT TO BE 6½" FOR TYPE 3 - MOLD 1. THIS MODIFIED CURB SHALL HAVE A HEIGHT OF 7¾" TO ACCOMMODATE THE FUTURE 1¼" OVERLAY BY OTHERS.

CURB TYPE 3 - MOLD 1 (MODIFIED)

USE FOR ALL BITUMINOUS CURB EXCEPT FOR STA 1+42.50 TO 2+52.62 WHERE CURB SHALL BE SET AT STANDARD HEIGHT.

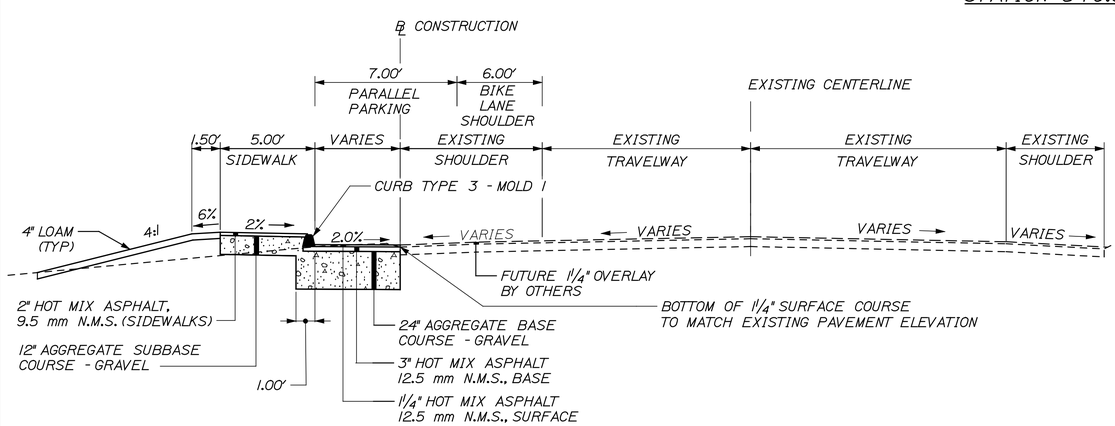

STATE ROUTE 88 SIDEWALK TYPICAL SECTION (W/PARKING)

STATION TO STATION
1+42.50 TO 2+52.62

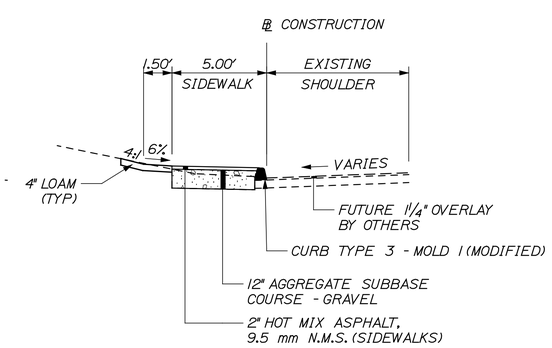

NOTES:

1. THE PAVEMENT, BASE, AND SUBBASE DEPTHS AS SHOWN ON THE PLANS ARE INTENDED TO BE NOMINAL.
2. THE STATIONING SHOWN UNDER EACH TYPICAL IS APPROXIMATE.
3. ALL DETAILS ON THIS SHEET REFER TO BID OPTION #1 EXCEPT THOSE SPECIFICALLY LABELED BID OPTION #2.

NOT TO SCALE

TYLIN INTERNATIONAL

STATE OF MAINE
DEPARTMENT OF TRANSPORTATION

STP-1733(100)X

PIN 17331.00

HIGHWAY PLANS

PROJ. MANAGER	KEK			
DESIGN-DETAILED	T. KELLEY	T. KELLEY	11/10	
CHECKED-REVIEWED	D. BRYANT	K. KERN	12/10	
DESIGN2-DETAILED2				
DESIGN3-DETAILED3				
REVISIONS 1		J. DAVIS	3/11	
REVISIONS 2				
REVISIONS 3				
REVISIONS 4				
FIELD CHANGES				

SIGNATURE

P.E. NUMBER

DATE

FALMOUTH
STATE ROUTE 88 SIDEWALK

TYPICAL SECTIONS

SHEET NUMBER

2

OF 8

Filename: ...\highway\msta\002_Typical.dgn Division: HIGHWAY Username: dbryant Date:5/13/2011

COMMON EXCAVATION FOR ESTIMATE

COMMON EXCAVATION (FROM CROSS SECTIONS)	160.6	
DRIVES	48.7	
ISLANDS	2.3	
GRUBBING IN FILL	0.8	
DITCHES	0	
PAVEMENT SALVAGE IN FILL	0	
PAVEMENT REMOVAL OUTSIDE CUT/FILL LIMITS	0	
TOTAL COMMON EXCAVATION		212.5

FILL FOR BORROW CALCULATIONS

COMMON FILL (FROM CROSS SECTIONS)	25.2	
GRUBBING IN FILL	0.8	
PAVEMENT SALVAGE IN FILL	0	
TOTAL FILL		26.0

ROCK EXCAVATION FOR ESTIMATE

ROCK EXCAVATION (FROM CROSS SECTIONS)	0	
TOTAL ROCK EXCAVATION		0

AVAILABLE COMMON EXCAVATION FOR BORROW CALCULATIONS

(1) TOTAL COMMON EXCAVATION		212.5
DEDUCTIONS:		
GRUBBING IN CUT	42.6	
GRUBBING IN FILL	0.8	
PAVEMENT SALVAGE IN CUT	0	
PAVEMENT SALVAGE IN FILL	0	
PAVEMENT REMOVAL OUTSIDE CUT/FILL LIMITS	0	
(2) TOTAL DEDUCTIONS		43.3
TOTAL AVAILABLE COMMON EXCAVATION [(1) - (2)]		169.1
TOTAL AVAILABLE STRUCT. EXCAVATION (UNDERDRAIN ONLY)		0
TOTAL AVAILABLE EXCAVATION FROM RIPRAP IN CUT		0
TOTAL AVAILABLE NON-ROCK EXCAVATION		169.1
TOTAL AVAILABLE ROCK EXCAVATION		0

COMPUTATION OF WASTE STORAGE & WASTE MATERIAL

TOTAL AVAILABLE WASTE STORAGE AREA (FROM CROSS SECTIONS)		0
GRUBBING IN CUT	42.6	
GRUBBING IN FILL	0.8	
TOTAL WASTE MATERIAL		43.3
TOTAL WASTE MATERIAL TO BE UTILIZED		0
(3) TOTAL WASTE MATERIAL TO BE WASTED		43.3

COMPUTATION OF COMMON BORROW FOR ESTIMATE

(4) TOTAL FILL REQUIRED				26.0
TOTAL AVAIL. NON-ROCK EXCAVATION	169.1	x0.85=	143.7	
TOTAL AVAIL. ROCK EXCAVATION	0	x1.33=	0	
TOTAL AVAIL. STR. ROCK EXCAVATION	0	x1.33=	0	
TOTAL WASTE MAT. TO BE UTILIZED	0	x1.00=	0	
(5) TOTAL AVAILABLE EXCAVATION				143.7
BORROW NEEDED [(4) - (5)]				
TOTAL SURPLUS MATERIAL [(3) + (5) - (4)]				161.1

SURPLUS AVAILABLE EXCAVATION

NOTES:

1. FOR ESTIMATED QUANTITIES SEE THE BID BOOK.
2. THE EARTHWORK SUMMARY SHOWN ON THIS SHEET REFERS ONLY TO BID OPTION #1.

T·Y·LIN INTERNATIONAL

STATE OF MAINE
DEPARTMENT OF TRANSPORTATION

STP-1733(100)X

PIN 17331.00

HIGHWAY PLANS

PROJ. MANAGER	D. BRYANT	BY	DATE	
DESIGN-DETAILED	T. KELLEY	T. KELLEY	12/10	
CHECKED-REVIEWED	D. BRYANT	K. KERN	12/10	SIGNATURE
DESIGN2-DETAILED2				
DESIGN3-DETAILED3		J. DAVIS	3/11	P.E. NUMBER
REVISIONS 1				
REVISIONS 2				
REVISIONS 3				DATE
REVISIONS 4				
FIELD CHANGES				

FALMOUTH
STATE ROUTE 88 SIDEWALK

EARTHWORK SUMMARY

SHEET NUMBER
3
OF 8

Filename: ...\HIGHWAY\MSTA\003_Estimate.dgn Division: HIGHWAY Username: dbryant Date:5/13/2011

GENERAL NOTES

1. THE UTILITIES INVOLVED IN THIS CONTRACT ARE AS FOLLOWS: CENTRAL MAINE POWER COMPANY, FAIRPOINT COMMUNICATIONS, PORTLAND WATER DISTRICT, OXFORD NETWORK, TOWN OF FALMOUTH (SEWER SYSTEM) AND TIME WARNER CABLE.

2. ALL UTILITY FACILITIES SHALL BE ADJUSTED BY THE RESPECTIVE UTILITIES UNLESS OTHERWISE NOTED.

3. WHERE PAVEMENT UNDER THIS CONTRACT JOINS AN EXISTING PAVEMENT, THE EXISTING PAVEMENT SHALL BE SAW CUT ALONG A SMOOTH LINE TO A NEAT, EVEN, VERTICAL JOINT AS DIRECTED BY THE RESIDENT. BROKEN OR RAVELED EDGES WILL NOT BE PERMITTED. ALL WORK NECESSARY FOR THE PREPARATION OF THIS JOINT WILL BE CONSIDERED INCIDENTAL TO THE RELATED CONTRACT ITEMS.

4. GRUBBING AREAS HAVE BEEN SHOWN ON THE CROSS SECTIONS AND THE QUANTITIES NOTED. THESE LIMITS ARE APPROXIMATE AND HAVE BEEN USED FOR ESTIMATING PURPOSES ONLY. ACTUAL GRUBBING LIMITS MAY VARY BASED ON FIELD CONDITIONS AS DIRECTED BY THE RESIDENT. ESTIMATED GRUBBING DEPTHS ARE 6 INCHES.

5. ALL WASTE MATERIAL NOT USED ON THE PROJECT SHALL BE DISPOSED OF OFF THE PROJECT IN WASTE AREAS APPROVED BY THE RESIDENT.

6. GRANULAR BORROW USED TO BACKFILL MUCK EXCAVATION OR IN LOW WET AREAS TO 1 FT ABOVE WATER LEVEL OR OLD GROUND SHALL MEET REQUIREMENTS FOR GRANULAR BORROW UNDERWATER BACKFILL.

7. DRIVEWAY FILL SLOPES SHALL BE THE SAME AS THE FILL SLOPES SHOWN ON THE TYPICAL SECTIONS UNLESS OTHERWISE NOTED ON THE PLANS.

8. RESIDENTIAL PAVED ENTRANCES SHALL BE CONSTRUCTED WITH: 2" HOT MIX ASPHALT AND 12" AGGREGATE SUBBASE COURSE GRAVEL.

9. COMMERCIAL PAVED ENTRANCES SHALL BE CONSTRUCTED WITH: 3" HOT MIX ASPHALT AND 11" AGGREGATE SUBBASE COURSE GRAVEL.

10. BACKING UP BITUMINOUS CURB IS INCIDENTAL TO CURB ITEMS. IN AREAS WHERE PROPOSED BITUMINOUS CURB IS DESIGNATED TO REPLACE EXISTING BITUMINOUS CURB, THE REMOVAL OF EXISTING BITUMINOUS CURB SHALL BE PAID FOR AS COMMON EXCAVATION.

11. LOAM HAS BEEN ESTIMATED FOR ALL DISTURBED AREAS. ACTUAL PLACEMENT OF THE LOAM SHALL BE AS NOTED ON THE PLANS OR DESIGNATED BY THE RESIDENT.

12. LOAM SHALL BE PLACED TO A NOMINAL DEPTH OF 4 INCHES IN LAWN AREAS UNLESS OTHERWISE NOTED OR DIRECTED.

13. ACRYLIC LATEX COLOR FINISH GREEN (ITEM 658.20) SHALL BE PLACED ON ALL PAVED ISLANDS.

14. UNLESS OTHERWISE NOTED, SEEDING METHOD NO. 1 SHALL BE UTILIZED ON ALL LAWNS AND DEVELOPED AREAS.

15. A REFLECTORIZED FLEXIBLE GUARDRAIL MARKER (ITEM 606.353) WILL BE INSTALLED AT THE SOUTHERLY END OF BITUMINOUS CURB AT THE LIMIT OF WORK.

16. WHITE PAVEMENT CURB MARKING (ITEM 627.75) SHALL BE APPLIED TO BITUMINOUS CURB ENDS AT DRIVEWAY OPENINGS AS DIRECTED BY THE RESIDENT.

17. PAVEMENT MARKINGS SHALL CONFORM TO STANDARD DETAILS AND LATEST EDITION OF THE MANUAL ON UNIFORM TRAFFIC CONTROL DEVICES AND AS DIRECTED BY THE RESIDENT. THE ABBREVIATIONS SHOWN IN THE PLANS ARE AS FOLLOWS:

    SWEL: SINGLE WHITE EDGE LINE WITH 4" WIDE STRIPING

18. THE CONTRACTOR WILL BE RESPONSIBLE FOR MAINTAINING ALL EXISTING MAILBOXES TO ENSURE THAT THE MAIL WILL BE DELIVERABLE. NO SEPARATE PAYMENT WILL BE MADE FOR THIS WORK. IT SHALL BE CONSIDERED INCIDENTAL TO THE CONTRACT.

19. ANY DAMAGE TO THE SLOPES CAUSED BY THE CONTRACTOR'S EQUIPMENT, PERSONNEL, OR OPERATION SHALL BE REPAIRED TO THE SATISFACTION OF THE RESIDENT. ALL WORK, EQUIPMENT, AND MATERIALS REQUIRED TO MAKE REPAIRS SHALL BE AT THE CONTRACTOR'S EXPENSE.

20. AREAS REQUIRING FILL ON THE PROJECT WILL COME FROM SUITABLE EXCAVATION FROM EXCAVATION AREAS.

21. NO SEPARATE PAYMENT FOR SUPERINTENDENT OR FOREMAN WILL BE MADE FOR THE SUPERVISION OF EQUIPMENT BEING PAID FOR UNDER THE EQUIPMENT RENTAL ITEMS.

22. 'UNDETERMINED LOCATIONS' SHALL BE DETERMINED BY THE RESIDENT.

23. ALL WORK SHALL BE DONE IN ACCORDANCE WITH THE MAINE DEPARTMENT OF TRANSPORTATION'S BEST MANAGEMENT PRACTICES FOR EROSION CONTROL & SEDIMENT CONTROL, FEBRUARY, 2008.

24. CURB TYPE 3 SHALL BE INSTALLED WITH MOLD 1 OR MOLD 1 (MODIFIED), AND SHALL BE PLACED ON THE EXISTING PAVEMENT UNLESS OTHERWISE NOTED ON THE PLANS OR TYPICAL SECTIONS. WHERE CURB TYPE 3 MOLD 1 (MODIFIED) IS USED IT SHALL BE SET AT AN ELEVATION WHICH ACCOUNTS FOR A FUTURE 1.25" OVERLAY BY THE TOWN OF FALMOUTH (SEE TYPICAL SECTIONS).

25. TEMPORARY EROSION CONTROL MEASURES SHALL BE MAINTAINED AS SPECIFIED IN THE SOIL EROSION AND WATER POLLUTION CONTROL PLAN. PAYMENT WILL BE MADE UNDER 656.75 - TEMPORARY SOIL EROSION AND WATER POLLUTION CONTROL, LUMP SUM.

26. ITEM 608.26 - CURB RAMP DETECTABLE WARNING FIELD SHALL BE INSTALLED AT EACH CURB RAMP ADJACENT TO A MARKED CROSSWALK. ACTUAL PLACEMENT SHALL BE AS REQUIRED BY THE SPECIAL PROVISIONS, DETAILS, AND AS DIRECTED BY THE RESIDENT. PAYMENT FOR THIS ITEM SHALL INCLUDE ALL CONCRETE AND WORK REQUIRED BY THE DETAILS.

27. CONTRACTOR SHALL COORDINATE WITH THE TOWN OF FALMOUTH REGARDING THEIR DESIRE TO COMPLETE THE PAVEMENT OVERLAY OF ROUTE 88 AFTER THE CURB HAS BEEN INSTALLED BUT PRIOR TO APPLICATION OF PAVEMENT MARKINGS.

28. TRIM ALL BRANCHES TO 8 FEET ABOVE THE SIDEWALK AND 3' FROM EDGE OF SIDEWALK, AS WELL AS ANY BRANCHES DAMAGED BY THE CONTRACTOR DURING CONSTRUCTION. WORK SHALL BE COMPLETED ACCORDING TO SECTION 201 OF THE MAINE DEPARTMENT OF TRANSPORTATION STANDARD SPECIFICATIONS. PAYMENT SHALL BE INCIDENTAL TO THE RELATED CONTRACT ITEMS.

29. IF SIDEWALK IS OPENED TO PEDESTRIANS PRIOR TO THE OVERLAY BY THE TOWN OF FALMOUTH, CONTRACTOR SHALL ENSURE THAT SIDEWALK RAMPS AT CROSSWALKS MEET ADA REQUIREMENTS.

30. BID OPTION #1 PROVIDES CURB TYPE 3 ALONG THE SIDEWALK. BID OPTION #2 REPLACES THE CURB WITH VERTICAL CURB TYPE 1. THE PLANS AND CROSS SECTIONS IN THIS PLAN SET ALL REFER TO BID OPTION #1 ONLY. SEE THE BID BOOK FOR REVISED QUANTITIES FOR BID OPTION #2.

T·Y·LIN INTERNATIONAL

STATE OF MAINE
DEPARTMENT OF TRANSPORTATION

STP-1733(100)X

PIN 17331.00

HIGHWAY PLANS

PROJ. MANAGER	D. BRYANT	BY	DATE
DESIGN-DETAILED	T. KELLEY	T. KELLEY	12/10
CHECKED-REVIEWED	D. BRYANT	K. KERN	12/10
DESIGN2-DETAILED2			
DESIGN3-DETAILED3		J. DAVIS	3/11
REVISIONS 1			
REVISIONS 2			
REVISIONS 3			
REVISIONS 4			
FIELD CHANGES			

SIGNATURE

P.E. NUMBER

DATE

FALMOUTH
STATE ROUTE 88 SIDEWALK

GENERAL NOTES

SHEET NUMBER

4

OF 8

Filename: ...\HIGHWAY\MSTA\004_GenNotes.dgn Division: HIGHWAY Username: dbryant Date:5/13/2011

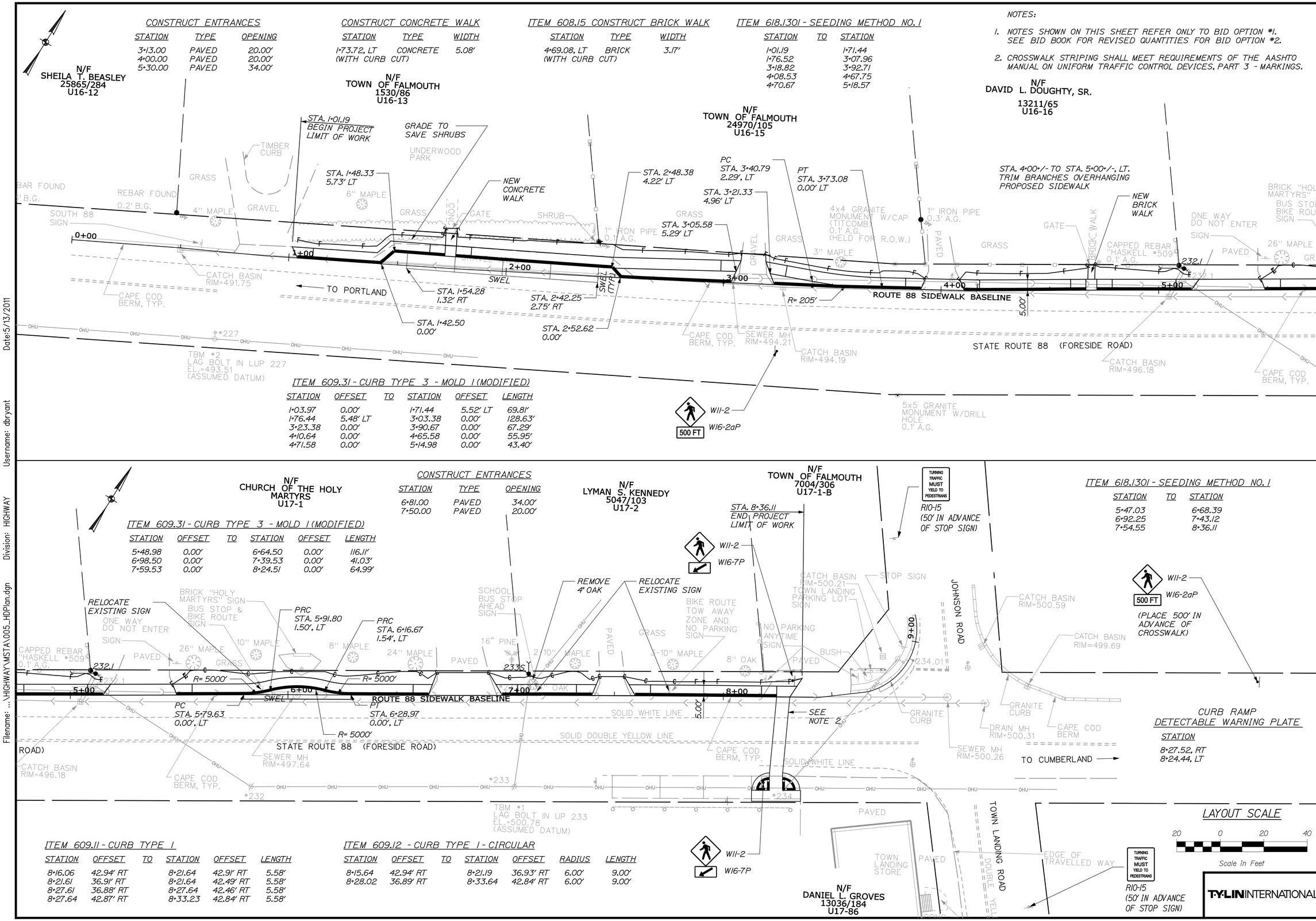

CONSTRUCT ENTRANCES

STATION	TYPE	OPENING
3+13.00	PAVED	20.00'
4+00.00	PAVED	20.00'
5+30.00	PAVED	34.00'

CONSTRUCT CONCRETE WALK

STATION	TYPE	WIDTH
1+73.72, LT (WITH CURB CUT)	CONCRETE	5.08'

ITEM 608.15 CONSTRUCT BRICK WALK

STATION	TYPE	WIDTH
4+69.08, LT (WITH CURB CUT)	BRICK	3.17'

ITEM 618.1301 - SEEDING METHOD NO. 1

STATION	TO	STATION
1+01.19		1+71.44
1+76.52		3+07.96
3+18.82		3+92.71
4+08.53		4+67.75
4+70.67		5+18.57

NOTES:

1. NOTES SHOWN ON THIS SHEET REFER ONLY TO BID OPTION #1. SEE BID BOOK FOR REVISED QUANTITIES FOR BID OPTION #2.
2. CROSSWALK STRIPING SHALL MEET REQUIREMENTS OF THE AASHTO MANUAL ON UNIFORM TRAFFIC CONTROL DEVICES, PART 3 - MARKINGS.

ITEM 609.31 - CURB TYPE 3 - MOLD 1 (MODIFIED)

STATION	OFFSET	TO	STATION	OFFSET	LENGTH
1+03.97	0.00'		1+71.44	5.52' LT	69.81'
1+76.44	5.48' LT		3+03.38	0.00'	128.63'
3+23.38	0.00'		3+90.67	0.00'	67.29'
4+10.64	0.00'		4+65.58	0.00'	55.95'
4+71.58	0.00'		5+14.98	0.00'	43.40'

CONSTRUCT ENTRANCES

STATION	TYPE	OPENING
6+81.00	PAVED	34.00'
7+50.00	PAVED	20.00'

ITEM 609.31 - CURB TYPE 3 - MOLD 1 (MODIFIED)

STATION	OFFSET	TO	STATION	OFFSET	LENGTH
5+48.98	0.00'		6+64.50	0.00'	116.11'
6+98.50	0.00'		7+39.53	0.00'	41.03'
7+59.53	0.00'		8+24.51	0.00'	64.99'

ITEM 618.1301 - SEEDING METHOD NO. 1

STATION	TO	STATION
5+47.03		6+68.39
6+92.25		7+43.12
7+54.55		8+36.11

ITEM 609.11 - CURB TYPE 1

STATION	OFFSET	TO	STATION	OFFSET	LENGTH
8+16.06	42.94' RT		8+21.64	42.91' RT	5.58'
8+21.61	36.91' RT		8+21.64	42.49' RT	5.58'
8+27.61	36.88' RT		8+27.64	42.46' RT	5.58'
8+27.64	42.87' RT		8+33.23	42.84' RT	5.58'

ITEM 609.12 - CURB TYPE 1 - CIRCULAR

STATION	OFFSET	TO	STATION	OFFSET	RADIUS	LENGTH
8+15.64	42.94' RT		8+21.19	36.93' RT	6.00'	9.00'
8+28.02	36.89' RT		8+33.64	42.84' RT	6.00'	9.00'

STATE OF MAINE
DEPARTMENT OF TRANSPORTATION

STP-1733(100)X

PIN 17331.00

HIGHWAY PLANS

	BY	DATE
PROJ. MANAGER	D. BRYANT	
DESIGN-DETAILED	T. KELLEY	12/10
CHECKED-REVIEWED	K. DUCHARME	12/10
DESIGN2-DETAILED2	D. BRYANT	
DESIGN3-DETAILED3		
REVISIONS 1	J. DAVIS	3/11
REVISIONS 2		
REVISIONS 3		
REVISIONS 4		
FIELD CHANGES		

SIGNATURE

P.E. NUMBER

DATE

FALMOUTH
STATE ROUTE 88 SIDEWALK
PLAN

SHEET NUMBER

5

OF 8

T·Y·LIN INTERNATIONAL

Filename: ...\HIGHWAY\MSTA\005_HDPlan.dgn Division: HIGHWAY Username: dbryant Date:5/13/2011

NOTE:
CROSS SECTIONS SHOW BID OPTION #1 ONLY.
REFER TO BID BOOK FOR REVISED QUANTITIES FOR BID OPTION #2.

C = 12.8 CY
F = 4.2 CY
G = 0.5 CY

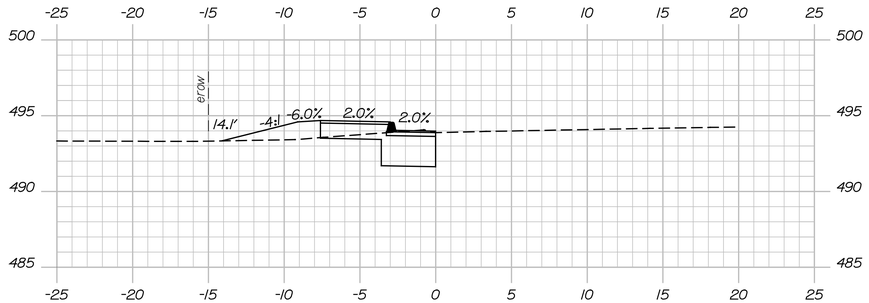

2+50.00

C = 22.7 CY
F = 6.2 CY

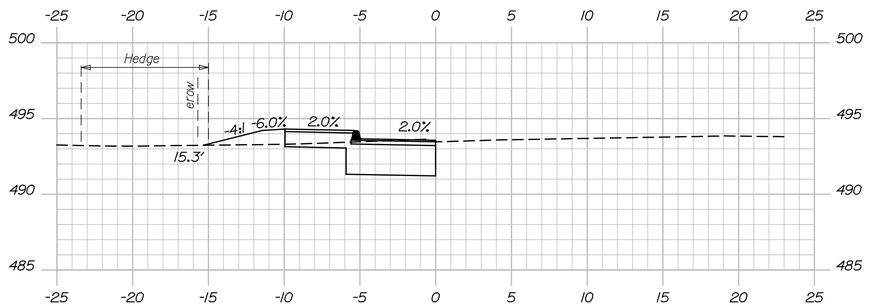

2+00.00

C = 33.1 CY
F = 4.9 CY

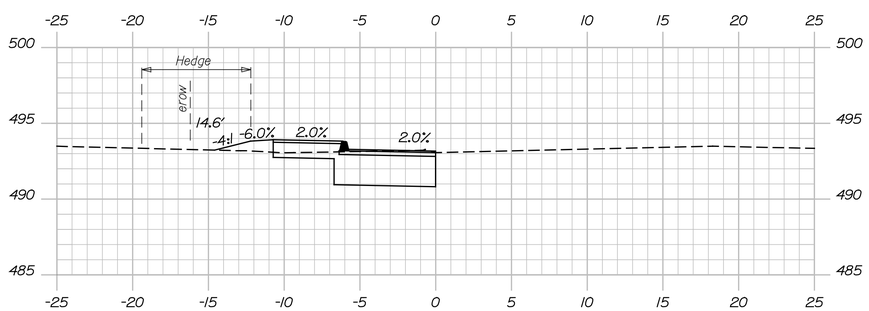

1+50.00

STA. 1+01.19
BEGIN PROJECT
LIMIT OF WORK

C = 2.3 CY
F = 2.3 CY

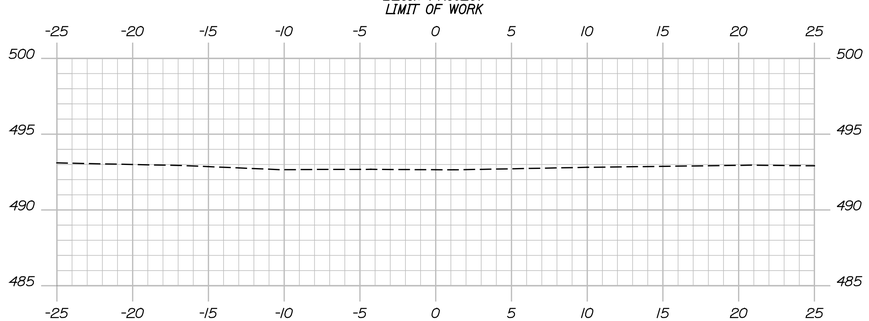

1+00.00

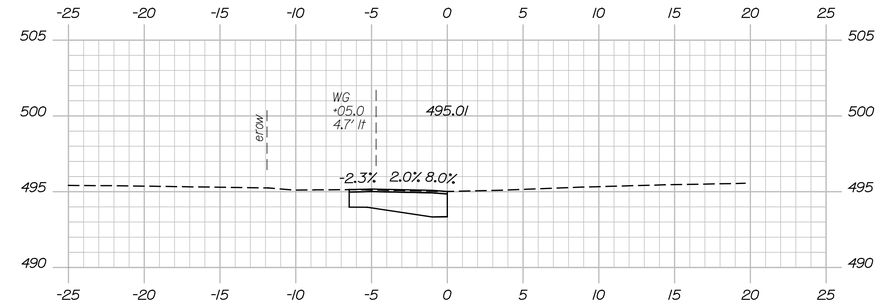

Driveway, Lt. 4+00.00

C = 5.8 CY
F = 0.7 CY

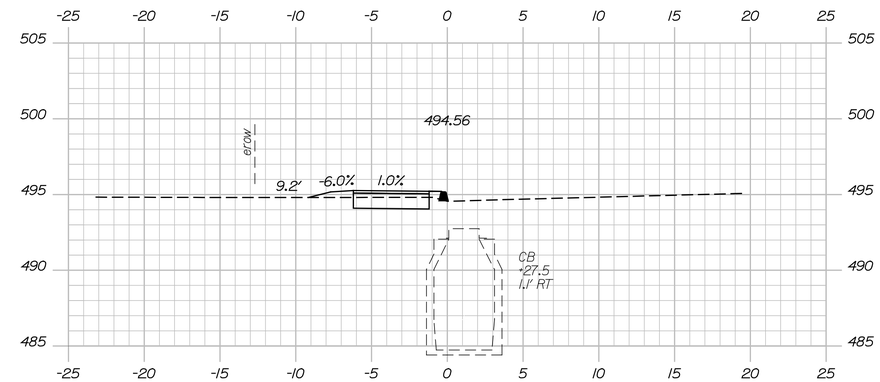

3+50.00

C = 4.9 CY
F = 0.8 CY
G = 0.7 CY

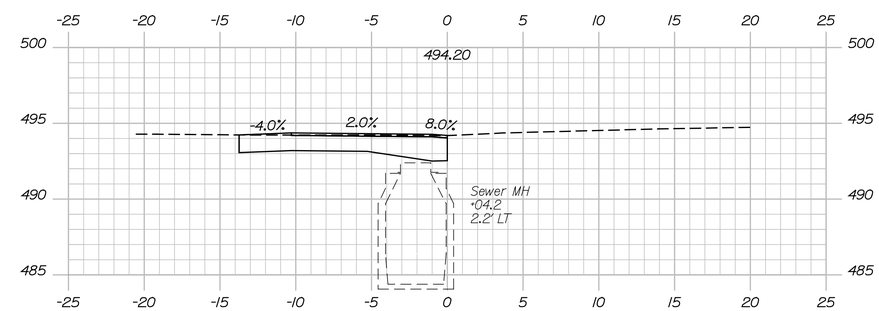

Driveway, Lt. 3+13.00

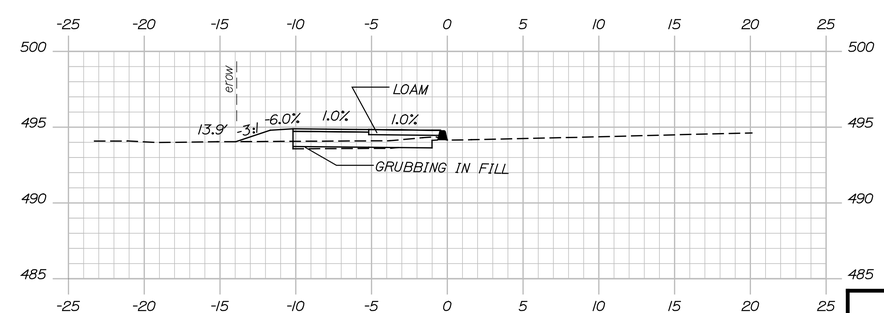

3+00.00

T·Y·LIN INTERNATIONAL

STATE OF MAINE
DEPARTMENT OF TRANSPORTATION

STP-1733(100)X

PIN
17331.00

HIGHWAY PLANS

PROJ. MANAGER	D. BRYANT	BY	DATE
DESIGN-DETAILED	T. KELLEY	T. KELLEY	12/10
CHECKED-REVIEWED	D. BRYANT	K. DUCHARME	12/10
DESIGN2-DETAILED2			
DESIGN3-DETAILED3		J. DAVIS	3/11
REVISIONS 1			
REVISIONS 2			
REVISIONS 3			
REVISIONS 4			
FIELD CHANGES			

SIGNATURE

P.E. NUMBER

DATE

FALMOUTH
STATE ROUTE 88 SIDEWALK

CROSS SECTIONS

SHEET NUMBER
6
OF 8

Filename: ...\HIGHWAY\MSTA\006_XSections.dgn Division: HIGHWAY Username: dbryant Date:5/13/2011

Sta. 1+00.00 to Sta. 4+00.00

NOTE:
CROSS SECTIONS SHOW BID OPTION #1 ONLY.
REFER TO BID BOOK FOR REVISED QUANTITIES FOR BID OPTION #2.

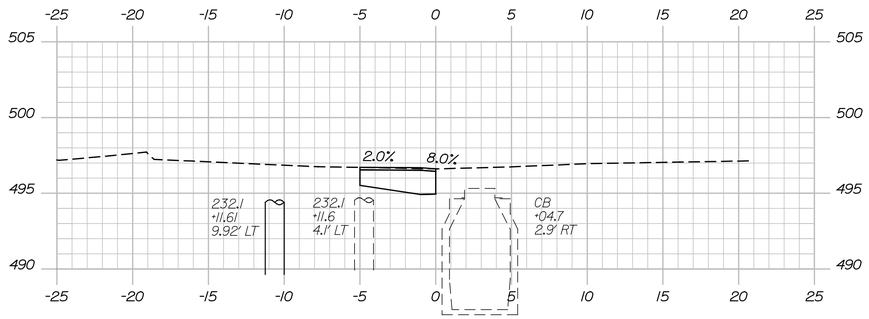

Driveway, Lt. 5+30.00

C = 1.9 CY
F = 0.7 CY

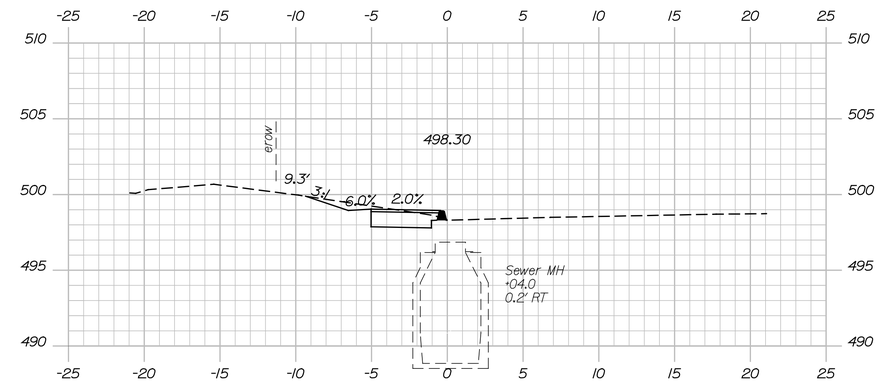

6+50.00

C = 24.5 CY
F = 0.0 CY

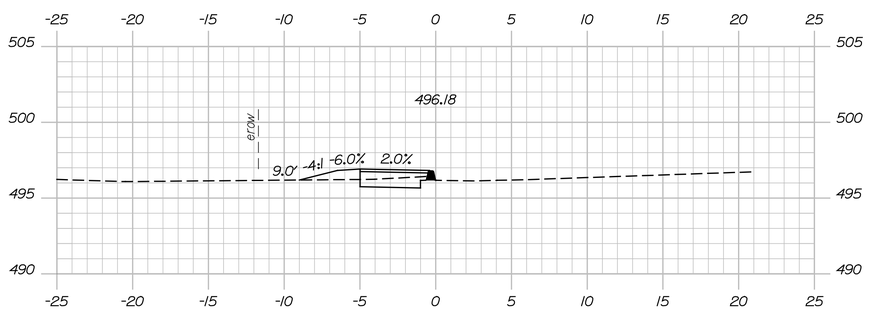

5+00.00

C = 4.6 CY
F = 2.4 CY

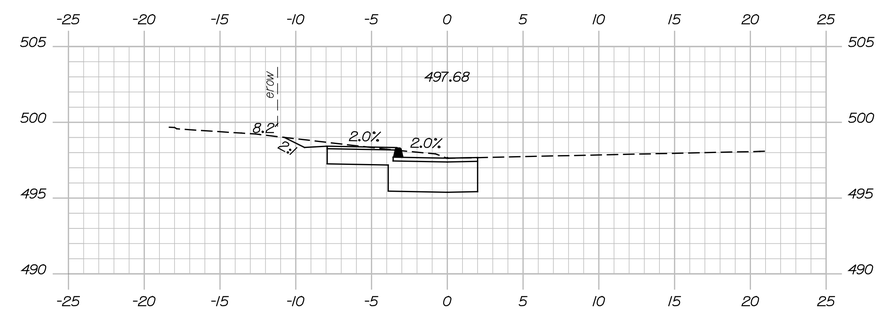

6+00.00

C = 21.6 CY
F = 0.2 CY

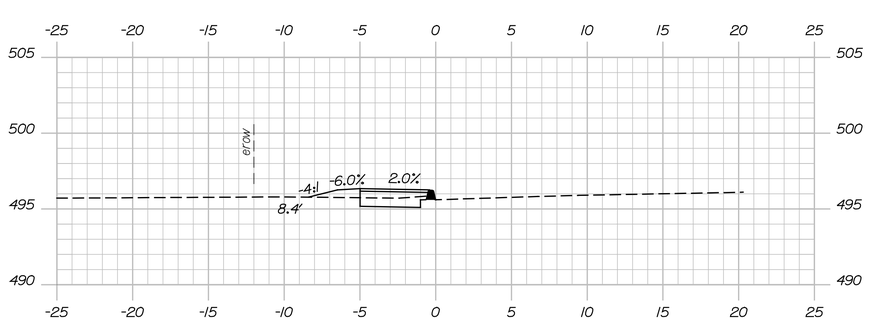

4+50.00

C = 3.8 CY
F = 2.3 CY

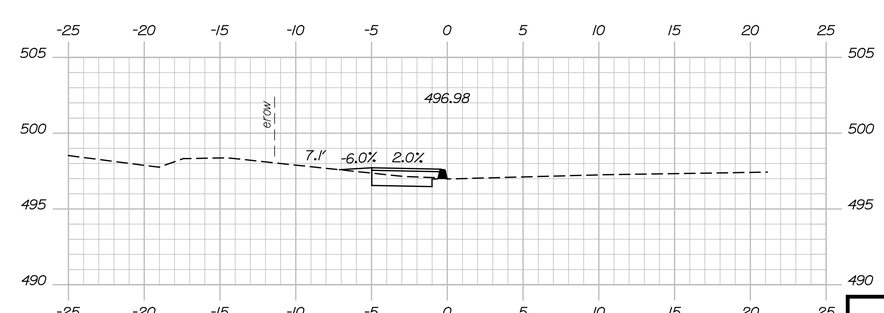

5+50.00

C = 24.5 CY
F = 0.0 CY

T·Y·LIN INTERNATIONAL

STATE OF MAINE
DEPARTMENT OF TRANSPORTATION

STP-1733(100)X

PIN
17331.00

HIGHWAY PLANS

PROJ. MANAGER	D. BRYANT	BY	DATE
DESIGN-DETAILED	T. KELLEY	T. KELLEY	12/10
CHECKED-REVIEWED	D. BRYANT	K. DUCHARME	12/10
DESIGN2-DETAILED2			
DESIGN3-DETAILED3		J. DAVIS	3/11
REVISIONS 1			
REVISIONS 2			
REVISIONS 3			
REVISIONS 4			
FIELD CHANGES			

SIGNATURE

P.E. NUMBER

DATE

FALMOUTH
STATE ROUTE 88 SIDEWALK

CROSS SECTIONS

SHEET NUMBER
7
OF 8

Sta. 4+50.00 to Sta. 6+50.00

Filename: ...\HIGHWAY\MSTA\006_XSections.dgn Division: HIGHWAY Username: dbryant Date:5/13/2011

NOTE:
CROSS SECTIONS SHOW BID OPTION #1 ONLY.
REFER TO BID BOOK FOR REVISED QUANTITIES FOR BID OPTION #2.

C = 5.2 CY
F = 0.4 CY

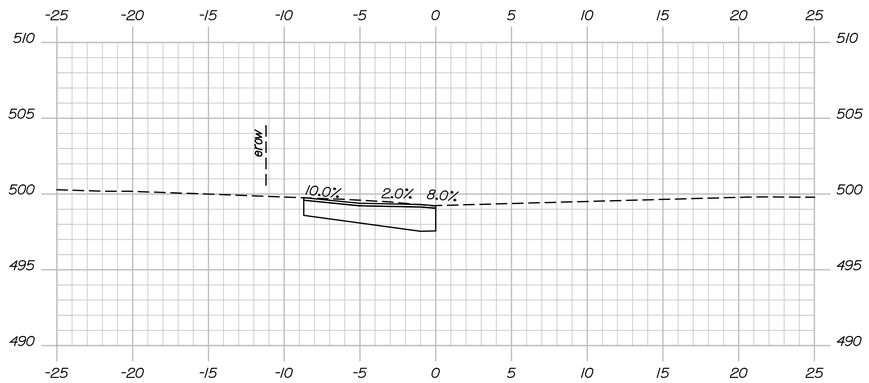

Driveway, Lt. 7+50.00

C = 9.5 CY
F = 0.0 CY

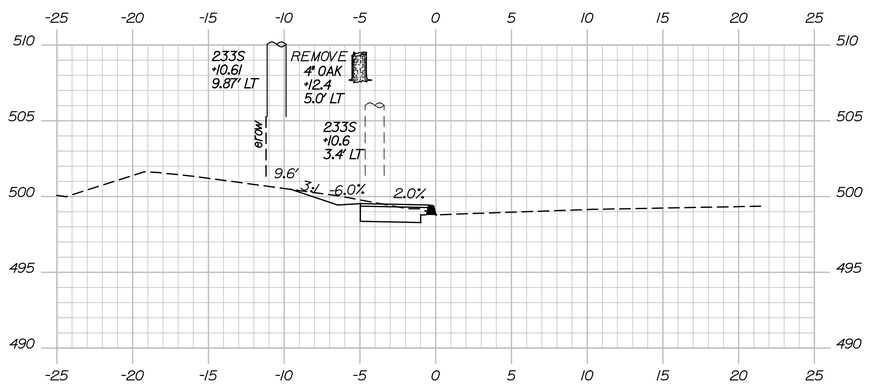

7+00.00

C = 4.1 CY
F = 0.0 CY

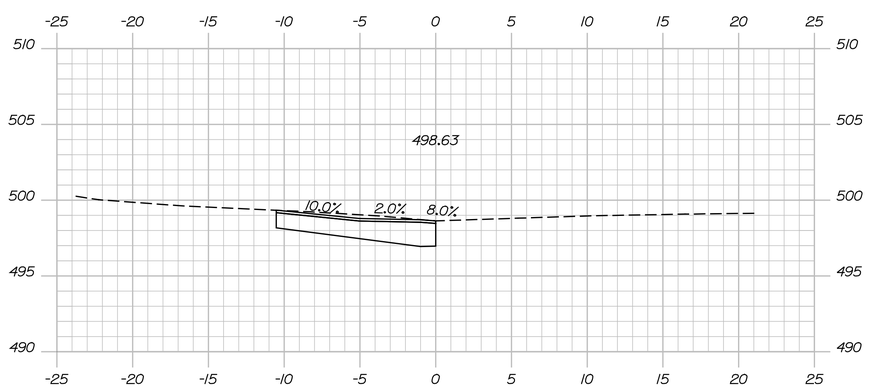

Driveway, Lt. 6+81.50

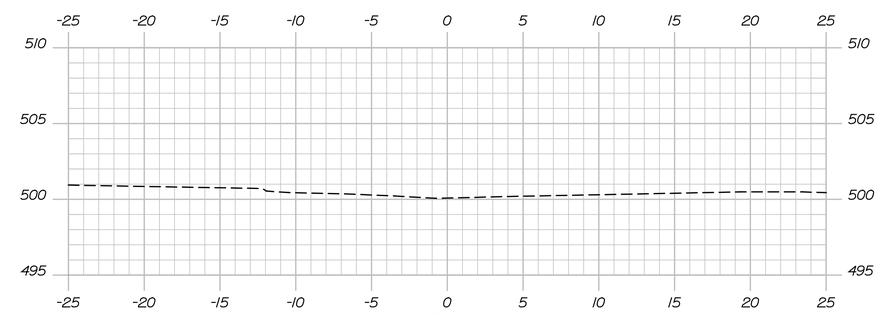

8+50.00

STA. 8+36.11
END PROJECT
LIMIT OF WORK

C = 3.9 CY
F = 0.3 CY

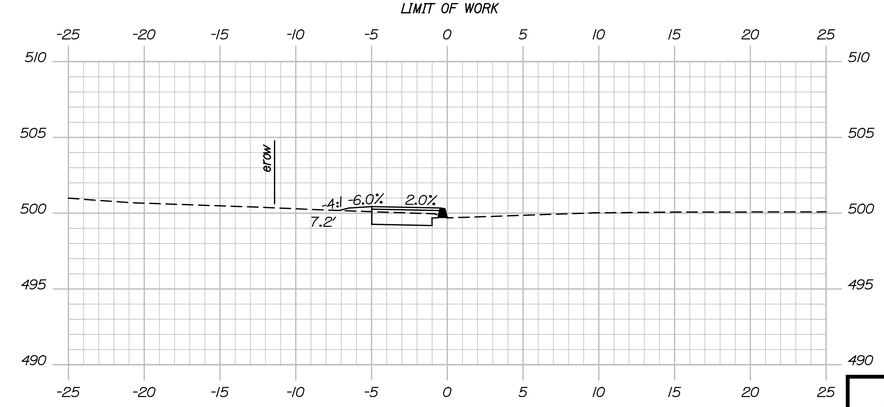

8+00.00

T·Y·LIN INTERNATIONAL

STATE OF MAINE
DEPARTMENT OF TRANSPORTATION

STP-1733(100)X

PIN
17331.00

HIGHWAY PLANS

		BY	DATE
PROJ. MANAGER	D. BRYANT		
DESIGN-DETAILED	T. KELLEY	T. KELLEY	12/10
CHECKED-REVIEWED	D. BRYANT	K. DUCHARME	12/10
DESIGN2-DETAILED2			
DESIGN3-DETAILED3		J. DAVIS	3/11
REVISIONS 1			
REVISIONS 2			
REVISIONS 3			
REVISIONS 4			
FIELD CHANGES			

SIGNATURE

P.E. NUMBER

DATE

FALMOUTH
STATE ROUTE 88 SIDEWALK

CROSS SECTIONS

SHEET NUMBER
8
OF 8

Filename: ...\HIGHWAY\MSTA\006_XSections.dgn Division: HIGHWAY Username: dbryant Date:5/13/2011

Sta. 6+81.50 to Sta. 8+50.00