STATE OF MAINE
DEPARTMENT OF TRANSPORTATION
16 STATE HOUSE STATION
AUGUSTA, MAINE 04333-0016

Paul R. LePage
GOVERNOR

David Bernhardt
COMMISSIONER

August 26, 2011
Subject: **Highway Reconstruction**
Location: **Saco-Buxton**
State Pin No: **009493.10**
Amendment No. 2

Dear Sir/Ms:

Make the following changes to the Bid Documents:

In the Bid Book (pages 4 thru 12) **REMOVE** the "SCHEDULE OF ITEMS" 12 pages dated 110808 and **REPLACE** with the attached new "SCHEDULE OF ITEMS" 12 pages dated 110826.

In the Bid Book (pages 31 thru 33) **REMOVE** "General Decision Number: ME100009 09/03/2010" (Federal Wage Rates) and **REPLACE** with the attached new "General Decision Number: ME100009 08/26/2011".

In the Bid Book after page 142 **ADD** the attached "SPECIAL PROVISION, SECTION 803, TEST PITS" 1 page dated August 25, 2011.

In the Plans **REMOVE** the following Plan Sheets and **REPLACE** with the attached new Plan Sheets;

Sheet 2 of 187
Sheet 3 of 187
Sheet 4 of 187
Sheet 5 of 187
Sheet 10 of 187
Sheet 11 of 187
Sheet 12 of 187

NOTE: Plan Sheets will be FedExed/Mailed to those who purchased plans in the quantity and size ordered.

The following questions have been received:

Question: Reference "Special Provisions Section 104 Utilities", page 13 of 14, Maritimes Northeast Pipeline. Please provide the minimum distance that the contractor is allowed to excavate from their pipeline without notice.

PRINTED ON RECYCLED PAPER

Response: Maritimes Northeast will require notification when the contractor is working within 50' either side of their 30" line.

Question: Special Provision, Section 543 – Precast Concrete Inlet Dam, section 534.21 Hardware paragraph 2 states "The lifting machinery shall be power operated two light duty winches or rotor and cable mechanisms …". Is the electrical work (electrical service, meter, wire, conduit etc.) paid for separately or is it considered incidental?

Response: Considered Incidental.

Question: Special Provision, Section 104 – Utilities page 13 (of 14) paragraph 2, 2nd sentence states "The Contractor is urged to use the test pit item provided in this contract, in advance, to determine if a conflict exist …". We do not find a test pit item in the schedule of items for this project. How will test pits be paid if they are required?

Response: Test pits if needed will be paid for under item 803.011 Test Pits. Please see the attached new schedule of Items.

Question: Can the Contractor salvage the existing bituminous pavement and utilize it for the aggregate base course – crushed provided it meets the required gradation?

Response: No. The Department would accept recycled pavement at 1 ½" minus for the top 3" of the subbase.

Question: Plan Sheet 8 of 187 – Cellar Drain Connection Detail Ditch note 2 states that the 6" pipe will be paid for under item 605.10. Plan Sheet 12 of 187 lists the 6" pipe under the underdrain column not the outlet column. Based on the quantities in the schedule of items it appears that the 6" pipe for the cellar drain connections has been carried under item 605.06 6" underdrain not 605.10 underdrain outlet. Please clarify which pay item payment will be made under.

Response: Please see attached revised Schedule of Items and drainage sheets.

Consider these changes and information prior to submitting your bid on August 31, 2011.

Sincerely,

for Scott Bickford
Contracts & Specifications Engineer

CONTRACT ID: 009493.10 PROJECT(S): STP 9493(100)X

CONTRACTOR :_____

LINE NO	ITEM DESCRIPTION	APPROX. QUANTITY AND UNITS	UNIT PRICE DOLLARS	UNIT PRICE CTS	BID AMOUNT DOLLARS	BID AMOUNT CTS
	SECTION 0001 PROJECT ITEMS					
0010	201.11 CLEARING	2.300 HA				
0020	201.23 REMOVING SINGLE TREE TOP ONLY	101.000 EA				
0030	201.24 REMOVING STUMP	105.000 EA				
0040	202.08 REMOVING BUILDING NO.: 1	LUMP	LUMP			
0050	202.08 REMOVING BUILDING NO.: 2	LUMP	LUMP			
0060	202.15 REMOVING MANHOLE OR CATCH BASIN	1.000 EA				
0070	202.202 REMOVING PAVEMENT SURFACE	9875.000 M2				
0080	202.203 PAVEMENT BUTT JOINTS	670.000 M2				
0090	203.21 ROCK EXCAVATION	100.000 M3				
0100	203.25 GRANULAR BORROW	100.000 M3				

CONTRACT ID: 009493.10 PROJECT(S): STP 9493(100)X

CONTRACTOR :_____

LINE NO	ITEM DESCRIPTION	APPROX. QUANTITY AND UNITS	UNIT PRICE DOLLARS	UNIT PRICE CTS	BID AMOUNT DOLLARS	BID AMOUNT CTS
0110	206.061 STRUCTURAL EARTH EXCAVATION - DRAINAGE AND MINOR STRUCTURES, BELOW GRADE	50.000 M3				
0120	206.07 STRUCTURAL ROCK EXCAVATION - DRAINAGE AND MINOR STRUCTURES	50.000 M3				
0130	304.10 AGGREGATE SUBBASE COURSE - GRAVEL	31400.000 M3				
0140	403.209 HOT MIX ASPHALT 9.5 MM (SIDEWALKS, DRIVES, INCIDENTALS)	775.000 MG				
0150	403.210 HOT MIX ASPHALT 9.5 MM	2425.000 MG				
0160	403.211 HOT MIX ASPHALT (SHIM)	1300.000 MG				
0170	502.341 STRUCTURAL CONCRETE ROADWAY MEDIAN	225.000 M3				
0180	512.081 FRENCH DRAINS	LUMP	LUMP			
0190	527.303 ENERGY ABSORBING SYSTEM (ETPLUS)	5.000 EA				
0200	534.50 PRECAST STRUCTURAL CONCRETE INLET DAM	LUMP	LUMP			
0210	603.16 375 MM CULVERT PIPE OPTION I	719.000 M				

CONTRACT ID: 009493.10 PROJECT(S): STP 9493(100)X

CONTRACTOR :_____

LINE NO	ITEM DESCRIPTION	APPROX. QUANTITY AND UNITS	UNIT PRICE DOLLARS	UNIT PRICE CTS	BID AMOUNT DOLLARS	BID AMOUNT CTS
0220	603.169 375 MM CULVERT PIPE OPTION III	312.000 M				
0230	603.17 450 MM CULVERT PIPE OPTION I	22.000 M				
0240	603.175 450 MM RCP CLASS III	52.000 M				
0250	603.179 450 MM CULVERT PIPE OPTION III	70.000 M				
0260	603.19 600 MM CULVERT PIPE OPTION I	25.000 M				
0270	603.195 600 MM RCP CLASS III	50.000 M				
0280	603.199 600 MM CULVERT PIPE OPTION III	20.000 M				
0290	603.205 750 MM REINFORCED CONCRETE PIPE CLASS III	181.000 M				
0300	603.209 750 MM CULVERT PIPE OPTION III	48.000 M				
0310	603.215 900 MM REINFORCED CONCRETE PIPE CLASS III	27.000 M				
0320	603.219 900 MM CULVERT PIPE OPTION III	10.000 M				

CONTRACT ID: 009493.10 PROJECT(S): STP 9493(100)X

CONTRACTOR :_____

LINE NO	ITEM DESCRIPTION	APPROX. QUANTITY AND UNITS	UNIT PRICE DOLLARS	UNIT PRICE CTS	BID AMOUNT DOLLARS	BID AMOUNT CTS
0330	603.235 1200 MM REINFORCED CONCRETE PIPE CLASS III	25.000 M				
0340	603.255 1500 MM RCP CLASS III	25.000 M				
0350	604.09 CATCH BASIN TYPE B1	2.000 EA				
0360	604.092 CATCH BASIN TYPE B1-C	21.000 EA				
0370	604.096 1500 MM CATCH BASIN TYPE B1-C	4.600 EA				
0380	604.18 ADJUSTING MANHOLE OR CATCH BASIN TO GRADE	42.000 EA				
0390	604.2405 HDPE CATCH BASIN	1.000 EA				
0400	604.245 CATCH BASIN TYPE F4-C	5.000 EA				
0410	604.246 CATCH BASIN TYPE F5	1.000 EA				
0420	604.247 CATCH BASIN TYPE F5-C	10.000 EA				
0430	604.249 CATCH BASIN TYPE F6-C	1.000 EA				

CONTRACT ID: 009493.10 PROJECT(S): STP 9493(100)X

CONTRACTOR :_____

LINE NO	ITEM DESCRIPTION	APPROX. QUANTITY AND UNITS		UNIT PRICE DOLLARS	CTS	BID AMOUNT DOLLARS	CTS
0440	605.09 150 MM UNDERDRAIN TYPE B	486.000	M				
0450	605.10 150 MM UNDERDRAIN OUTLET	116.000	M				
0460	605.11 300 MM UNDERDRAIN TYPE C	1018.000	M				
0470	605.12 375 MM UNDERDRAIN TYPE C	520.000	M				
0480	605.13 450 MM UNDERDRAIN TYPE C	138.000	M				
0490	605.15 600 MM UNDERDRAIN TYPE C	361.000	M				
0500	605.17 750 MM UNDERDRAIN TYPE C	175.000	M				
0510	605.18 900 MM UNDERDRAIN TYPE C	139.000	M				
0520	606.23 GUARDRAIL TYPE 3C - SINGLE RAIL	538.000	M				
0530	606.232 GUARDRAIL TYPE 3C - OVER 4.5 M RADIUS	69.000	M				
0540	606.265 TERMINAL END - SINGLE RAIL - GALVANIZED STEEL	9.000	EA				

CONTRACT ID: 009493.10 PROJECT(S): STP 9493(100)X

CONTRACTOR :_____

LINE NO	ITEM DESCRIPTION	APPROX. QUANTITY AND UNITS	UNIT PRICE DOLLARS	UNIT PRICE CTS	BID AMOUNT DOLLARS	BID AMOUNT CTS
0550	606.353 REFLECTORIZED FLEXIBLE GUARDRAIL MARKER	28.000 EA				
0560	606.356 UNDERDRAIN DELINEATOR POST	46.000 EA				
0570	606.47 SINGLE WOOD POST	15.000 EA				
0580	609.31 CURB TYPE 3	2455.000 M				
0590	609.34 CURB TYPE 5	92.000 M				
0600	610.08 PLAIN RIPRAP	100.000 M3				
0610	610.18 STONE DITCH PROTECTION	95.000 M3				
0620	613.319 EROSION CONTROL BLANKET	12115.000 M2				
0630	615.07 LOAM	6525.000 M3				
0640	618.1301 SEEDING METHOD NUMBER 1 - PLAN QUANTITY	145.000 UN				
0650	618.1401 SEEDING METHOD NUMBER 2 - PLAN QUANTITY	380.000 UN				

CONTRACT ID: 009493.10 PROJECT(S): STP 9493(100)X

CONTRACTOR :_____

LINE NO	ITEM DESCRIPTION	APPROX. QUANTITY AND UNITS	UNIT PRICE DOLLARS	UNIT PRICE CTS	BID AMOUNT DOLLARS	BID AMOUNT CTS
0660	618.1411 SEEDING METHOD NUMBER 3 - PLAN QUANTITY	220.000 UN				
0670	619.1201 MULCH - PLAN QUANTITY	745.000 UN				
0680	620.54 STABILIZATION GEOTEXTILE	1000.000 M2				
0690	620.58 EROSION CONTROL GEOTEXTILE	620.000 M2				
0700	621.021 EVERGREEN TREES (600 MM - 900 MM) GROUP C	12.000 EA				
0710	621.025 EVERGREEN TREES (900 MM - 1200 MM) GROUP A	12.000 EA				
0720	621.026 EVERGREEN TREES (900 MM - 1200 MM) GROUP B	12.000 EA				
0730	621.027 EVERGREEN TREES (900 MM - 1200 MM) GROUP C	3.000 EA				
0740	621.196 MEDIUM DECIDUOUS TREE (45 MM - 50 MM CALIPER) GROUP B	12.000 EA				
0750	621.267 LARGE DECIDUOUS TREE (45 MM - 50 MM CALIPER) GROUP A	15.000 EA				
0760	621.269 LARGE DECIDUOUS TREE (45 MM - 50 MM CALIPER) GROUP C	6.000 EA				

CONTRACT ID: 009493.10 PROJECT(S): STP 9493(100)X

CONTRACTOR :_____

LINE NO	ITEM DESCRIPTION	APPROX. QUANTITY AND UNITS	UNIT PRICE DOLLARS	UNIT PRICE CTS	BID AMOUNT DOLLARS	BID AMOUNT CTS
0770	621.388 DWARF EVERGREENS (300 MM - 375 MM)	12.000 EA				
0780	621.389 DWARF EVERGREENS (375 MM - 450 MM) GROUP A	12.000 EA				
0790	621.397 DWARF EVERGREENS (450 MM - 600 MM) GROUP C	12.000 EA				
0800	621.402 DWARF EVERGREENS (600 MM - 750 MM) GROUP B	12.000 EA				
0810	621.403 DWARF EVERGREENS (600 MM - 750 MM) GROUP C	12.000 EA				
0820	621.546 DECIDUOUS SHRUBS (600 MM - 900 MM) GROUP A	36.000 EA				
0830	621.71 HERBACEOUS PERENNIALS GROUP A	24.000 EA				
0840	621.80 ESTABLISHMENT PERIOD	LUMP	LUMP			
0850	627.733 100 MM WHITE OR YELLOW PAINTED PAVEMENT MARKING LINE	44225.000 M				
0860	627.75 WHITE OR YELLOW PAVEMENT & CURB MARKING	45.000 M2				
0870	627.76 TEMPORARY PAVEMENT MARKING LINE, WHITE OR YELLOW	LUMP	LUMP			

CONTRACT ID: 009493.10 PROJECT(S): STP 9493(100)X

CONTRACTOR :_____

LINE NO	ITEM DESCRIPTION	APPROX. QUANTITY AND UNITS	UNIT PRICE DOLLARS	UNIT PRICE CTS	BID AMOUNT DOLLARS	BID AMOUNT CTS
0880	627.811 TEMPORARY BI-DIRECTIONAL YELLOW DELINEATORS	150.000 EA				
0890	629.05 HAND LABOR, STRAIGHT TIME	100.000 HR				
0900	631.12 ALL PURPOSE EXCAVATOR (INCLUDING OPERATOR)	20.000 HR				
0910	631.172 TRUCK - LARGE (INCLUDING OPERATOR)	40.000 HR				
0920	631.18 CHAIN SAW RENTAL (INCLUDING OPERATOR)	20.000 HR				
0930	631.20 STUMP CHIPPER (INCLUDING OPERATOR)	20.000 HR				
0940	631.22 FRONT END LOADER (INCLUDING OPERATOR)	10.000 HR				
0950	631.32 CULVERT CLEANER (INCLUDING OPERATOR)	10.000 HR				
0960	639.18 FIELD OFFICE TYPE A	1.000 EA				
0970	652.31 TYPE I BARRICADE	25.000 EA				
0980	652.311 TYPE II BARRICADE	25.000 EA				

CONTRACT ID: 009493.10 PROJECT(S): STP 9493(100)X

CONTRACTOR :_____

LINE NO	ITEM DESCRIPTION	APPROX. QUANTITY AND UNITS	UNIT PRICE DOLLARS	UNIT PRICE CTS	BID AMOUNT DOLLARS	BID AMOUNT CTS
0990	652.33 DRUM	75.000 EA				
1000	652.34 CONE	200.000 EA				
1010	652.35 CONSTRUCTION SIGNS	100.000 M2				
1020	652.361 MAINTENANCE OF TRAFFIC CONTROL DEVICES	LUMP	LUMP			
1030	652.38 FLAGGER	10000.000 HR				
1040	656.75 TEMPORARY SOIL EROSION AND WATER POLLUTION CONTROL	LUMP	LUMP			
1050	658.20 ACRYLIC LATEX COLOR FINISH, GREEN	200.000 M2				
1060	659.10 MOBILIZATION	LUMP	LUMP			
1070	660.21 ON-THE-JOB TRAINING (BID)	4000.000 HR				
1080	803.01 TEST PITS	3.000 EA				
1090	823.332 GATE VALVE BOX, ADJUST TO GRADE	10.000 EA				
	SECTION 0001 TOTAL					.

CONTRACT ID: 009493.10 PROJECT(S): STP 9493(100)X

CONTRACTOR :_____

LINE NO	ITEM DESCRIPTION	APPROX. QUANTITY AND UNITS	UNIT PRICE DOLLARS	UNIT PRICE CTS	BID AMOUNT DOLLARS	BID AMOUNT CTS
	SECTION 0002 ALTERNATE 1-HMA ALT GROUP AP1					
1100	203.20 COMMON EXCAVATION	58300.000 M3				
1110	304.09 AGGREGATE BASE COURSE - CRUSHED	10700.000 M3				
1120	403.208 HOT MIX ASPHALT 12.5 MM, SURFACE	6700.000 MG				
1130	403.213 HOT MIX ASPHALT 12.5 MM, BASE	18200.000 MG				
1140	409.15 BITUMINOUS TACK COAT APPLIED	22125.000 L				
	SECTION 0002 TOTAL					.
	SECTION 0003 ALTERNATE 2- PMRAP ALT GROUP AP2					
1150	203.20 COMMON EXCAVATION	52400.000 M3				
1160	304.09 AGGREGATE BASE COURSE - CRUSHED	7500.000 M3				
1170	310.24 PLANT MIX RECYCLED ASPHALT PAVEMENT - 100 MM DEPTH	52700.000 M2				

CONTRACT ID: 009493.10 PROJECT(S): STP 9493(100)X

CONTRACTOR :_____

LINE NO	ITEM DESCRIPTION	APPROX. QUANTITY AND UNITS	UNIT PRICE DOLLARS	UNIT PRICE CTS	BID AMOUNT DOLLARS	BID AMOUNT CTS
1180	403.208 HOT MIX ASPHALT 12.5 MM, SURFACE	6700.000 MG				
1190	403.213 HOT MIX ASPHALT 12.5 MM, BASE	12900.000 MG				
1200	409.15 BITUMINOUS TACK COAT APPLIED	24450.000 L				
	SECTION 0003 TOTAL					
	TOTAL BID					

General Decision Number: ME100009 08/26/2011 ME9

Superseded General Decision Number: ME20080009

State: Maine

Construction Type: Highway

Counties: Aroostook, Franklin, Hancock, Kennebec, Knox, Lincoln, Oxford, Piscataquis, Sagadahoc, Somerset, Waldo and York Counties in Maine.

HIGHWAY CONSTRUCTION PROJECTS excluding major bridging (for example: bascule, suspension and spandrel arch bridges; those bridging waters presently navigating or to be navigatable; and those involving marine construction in any degree); tunnels, building structures in rest area projects and railroad construction.

Modification Number	Publication Date
0	03/12/2010
1	03/26/2010
2	05/14/2010
3	09/03/2010
4	08/26/2011

* ENGI0004-015 06/01/2011

	Rates	Fringes
Power equipment operators:		
Asphalt Roller	$ 19.10	22.82
Pavers	$ 19.10	22.82

SUME2000-008 10/24/2000

	Rates	Fringes
CARPENTER	$ 11.60	1.51
Ironworkers:		
Structural	$ 12.03	1.58
Laborers:		
Drillers	$ 10.00	2.50
Flaggers	$ 7.25	
Guardrail Installers	$ 7.92	
Landscape	$ 7.87	.16

Line Stripper	$ 8.69	.23
Pipelayers	$ 9.21	2.31
Rakers	$ 9.00	1.51
Sign Erectors	$ 10.00	
Unskilled	$ 8.66	1.38
Wheelman	$ 8.50	.43
Power equipment operators:		
Backhoes	$ 11.87	2.05
Bulldozers	$ 12.33	2.88
Cranes	$ 14.06	1.75
Excavators	$ 12.38	2.48
Graders	$ 13.06	3.73
Loaders	$ 11.41	2.87
Mechanics	$ 13.18	2.57
Truck drivers:		
Dump	$ 9.35	3.10
Tri axle	$ 8.70	1.18
Two axle	$ 8.56	2.19

WELDERS - Receive rate prescribed for craft performing operation to which welding is incidental.

==========

Unlisted classifications needed for work not included within the scope of the classifications listed may be added after award only as provided in the labor standards contract clauses (29CFR 5.5 (a) (1) (ii)).

In the listing above, the "SU" designation means that rates listed under the identifier do not reflect collectively bargained wage and fringe benefit rates. Other designations indicate unions whose rates have been determined to be prevailing.

WAGE DETERMINATION APPEALS PROCESS

1.) Has there been an initial decision in the matter? This can be:

* an existing published wage determination
* a survey underlying a wage determination
* a Wage and Hour Division letter setting forth a position on a wage determination matter

* a conformance (additional classification and rate) ruling

On survey related matters, initial contact, including requests for summaries of surveys, should be with the Wage and Hour Regional Office for the area in which the survey was conducted because those Regional Offices have responsibility for the Davis-Bacon survey program. If the response from this initial contact is not satisfactory, then the process described in 2.) and 3.) should be followed.

With regard to any other matter not yet ripe for the formal process described here, initial contact should be with the Branch of Construction Wage Determinations. Write to:

Branch of Construction Wage Determinations
Wage and Hour Division
U.S. Department of Labor
200 Constitution Avenue, N.W.
Washington, DC 20210

2.) If the answer to the question in 1.) is yes, then an interested party (those affected by the action) can request review and reconsideration from the Wage and Hour Administrator (See 29 CFR Part 1.8 and 29 CFR Part 7). Write to:

Wage and Hour Administrator
U.S. Department of Labor
200 Constitution Avenue, N.W.
Washington, DC 20210

The request should be accompanied by a full statement of the interested party's position and by any information (wage payment data, project description, area practice material, etc.) that the requestor considers relevant to the issue.

3.) If the decision of the Administrator is not favorable, an interested party may appeal directly to the Administrative Review Board (formerly the Wage Appeals Board). Write to:

Administrative Review Board
U.S. Department of Labor
200 Constitution Avenue, N.W.
Washington, DC 20210

4.) All decisions by the Administrative Review Board are final.

==========

END OF GENERAL DECISION

SPECIAL PROVISION
SECTION 803
TEST PITS

Description. This work shall consist of excavating test pits for buried site features. At least 8 M3 of material must be excavated to qualify as a test pit. Only one test pit payment per specific site will be made.

Method of Measurement. Test Pits will be measured by the unit each, complete.

Basis of Payment. Payment for test pits shall include clearing, excavation, dewatering, backfill and compaction in locations as shown on the plans or as directed.

Pay Item		Pay Unit
803.01	Test Pits	Each

METRIC	1. All dimensions are in millimeters unless otherwise noted. 2. All elevations and stations are in meters.

F.H.W.A. REG. NO.	STATE	PROJECT NUMBER	SHEET NO.	TOTAL SHEETS
1	MAINE	STP-9493(100)X	2	187

9493.10

200 mm HOT MIX ASPHALT *

FULL CONSTRUCTION - HMA (OPTION 1)

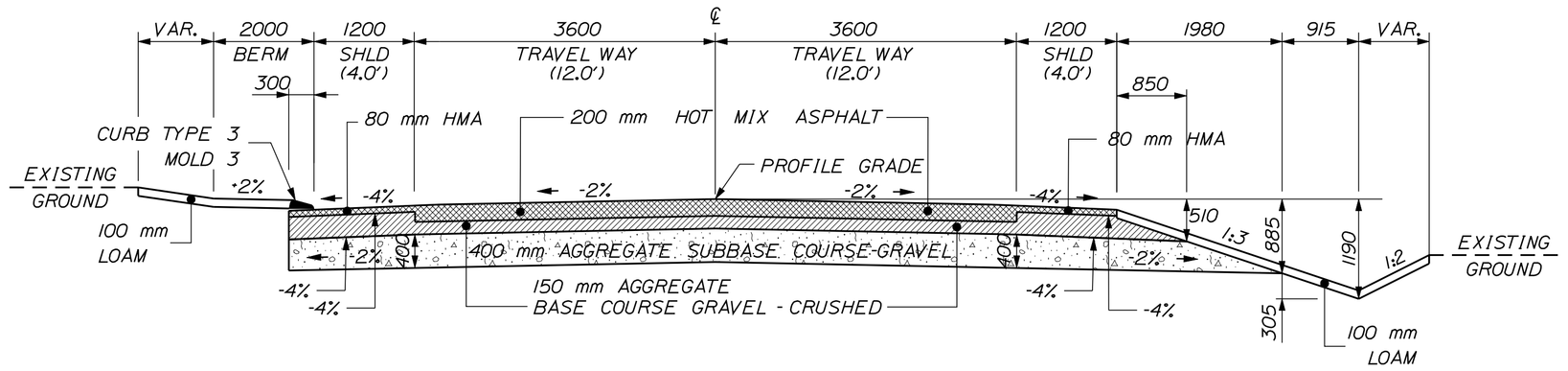

NORMAL FULL CONSTRUCTION

1200 mm SHOULDER with CURB
A. B. C. G.-C. = 0.405 m³/m
A. S. C.-G. = 0.568 m³/m
STA. TO STA.
6+608.476 TO 6+860.000 LT.
6+608.500 TO 6+706.100 RT.
6+952.635 TO 7+005.710 LT.
7+128.476 TO 7+211.520 LT.
8+080.000 TO 8+091.524 LT.
8+998.476 TO 9+061.524 LT.
9+380.000 TO 9+413.570 LT. (AT END OF DRIVE)
9+620.000 TO 9+681.476 RT.
9+858.5 TO 9+888.150 RT.
10+080.000 TO 10+220.000 LT.
10+617.460 TO 10+640.000 LT.
11+160.000 TO 11+231.500 RT.
11+160.000 TO 11+431.830 LT.

2 - 3600 mm TRAVELWAYS
150 mm A. B. C. G.-C. = 1.079 m³/m
400 mm A. S. C.-G. = 2.879 m³/m
STA. TO STA.
6+460.000 TO 7+280.000
7+600.000 TO 7+640.000
8+080.000 TO 8+300.000
8+680.000 TO 9+140.000
9+380.000 TO 9+420.000
9+620.000 TO 9+900.000
10+080.000 TO 10+220.000
10+600.000 TO 10+640.000
11+160.000 TO 11+600.000

1200 mm SHOULDER with 1:3 SLOPE	
A. B. C. G.-C. = 0.426 m³/m	
A. S. C.-G. = 0.965 m³/m	
STA. TO STA.	STA. TO STA. (cont.)
6+460.000 TO 6+600.000 LT.	8+680.000 TO 9+140.000 RT.
6+460.000 TO 6+600.000 RT.	9+380.000 TO 9+420.000 RT.
6+720.000 TO 7+280.000 RT.	9+070.000 TO 9+140.000 LT.
6+870.000 TO 6+927.466 LT.	9+620.000 TO 9+850.000 LT.
7+600.000 TO 7+640.000 RT.	9+689.000 TO 9+865.200 RT. (AT END OF CULVERT)
7+013.710 TO 7+120.000 LT.	
7+220.000 TO 7+280.000 LT.	10+080.000 TO 10+220.000 RT.
7+600.000 TO 7+640.000 LT.	11+240.000 TO 11+600.000 RT.
8+100.000 TO 8+125.864 LT.	11+440.000 TO 11+600.000 LT.
8+191.566 TO 8+300.000 LT.	
8+680.000 TO 8+980.000 LT.	

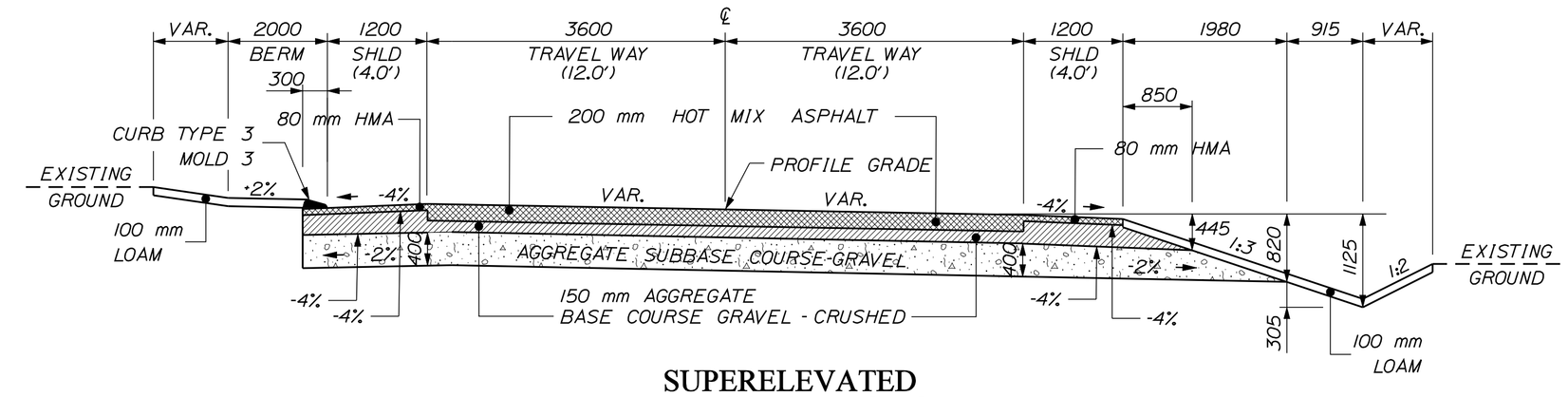

SUPERELEVATED FULL CONSTRUCTION

1200 mm SHOULDER with CURB
A. B. C. G.-C. = 0.405 m³/m
A. S. C.-G. = 0.568 m³/m
STA. TO STA.
7+340.00 TO 7+400.000 RT.
7+920.000 TO 8+020.000 LT.
9+263.476 TO 9+320.000 LT.
9+288.476 TO 9+320.000 RT.
9+518.476 TO 9+560.000 RT.
9+990.519 TO 10+020.000 LT.
10+280.000 TO 10+340.000 LT.
10+460.000 TO 10+461.830 LT.
10+700.000 TO 10+760.000 RT.
10+700.000 TO 10+760.000 LT.
10+860.000 TO 10+877.371 LT.
11+000.000 TO 11+063.410 LT.
11+020.000 TO 11+100.000 RT.

2 - 3600 mm TRAVELWAYS
150 mm A. B. C. G.-C. = 1.079 m³/m
400 mm A. S. C.-G. = 2.879 m³/m
STA. TO STA.
7+340.000 TO 7+400.000
7+440.000 TO 7+540.000
7+700.000 TO 7+800.000
7+920.000 TO 8+020.000
8+360.000 TO 8+420.000
8+520.000 TO 8+620.000
9+200.000 TO 9+320.000
9+480.000 TO 9+560.000
9+960.000 TO 10+020.000
10+280.000 TO 10+340.000
10+460.000 TO 10+540.000
10+700.000 TO 10+760.000
10+860.000 TO 10+900.000
11+000.000 TO 11+100.000

1200 mm SHOULDER with 1:3 SLOPE
A. B. C. G.-C. = 0.426 m³/m
A. S. C.-G. = 0.965 m³/m
STA. TO STA.
7+340.000 TO 7+400.000 LT.
7+440.000 TO 7+540.000 LT.
7+456.000 TO 7+540.000 RT.
7+700.000 TO 7+800.000 LT.
7+700.000 TO 7+800.000 RT.
8+520.000 TO 8+620.000 RT.
8+360.000 TO 8+420.000 LT.
8+520.000 TO 8+620.000 LT.
9+200.000 TO 9+260.000 LT.
9+200.000 TO 9+283.000 RT.
9+480.000 TO 9+510.000 RT.
9+480.000 TO 9+560.000 LT.
10+000.000 TO 10+020.000 RT.
10+280.000 TO 10+322.301 RT.
10+460.000 TO 10+480.000 RT.
10+470.000 TO 10+521.634 LT. (AT END OF CULVERT)
10+860.000 TO 10+900.000 RT.

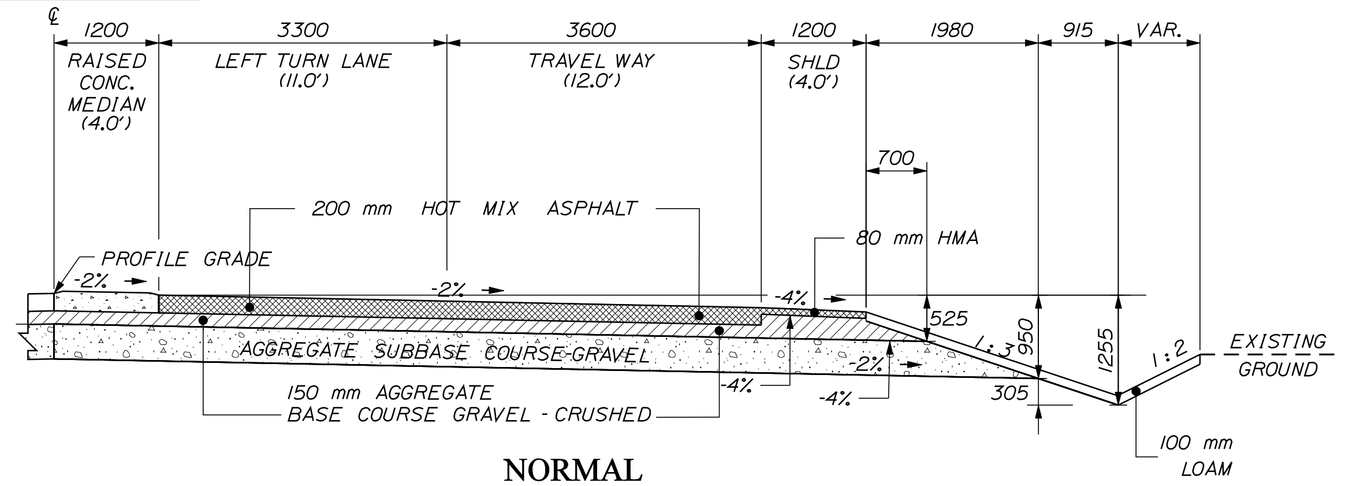

NORMAL FULL CONSTRUCTION WITH RAISED CONCRETE MEDIAN

1200 mm RAISED CONCRETE MEDIAN
150 mm A. B. C. G.-C. = 0.180 m³/m
400 mm A. S. C.-G. = 0.480 m³/m
STA. TO STA.
8+060.000 TO 8+140.000 RT.

(SEE RAISED CONCRETE MEDIAN DETAILS)

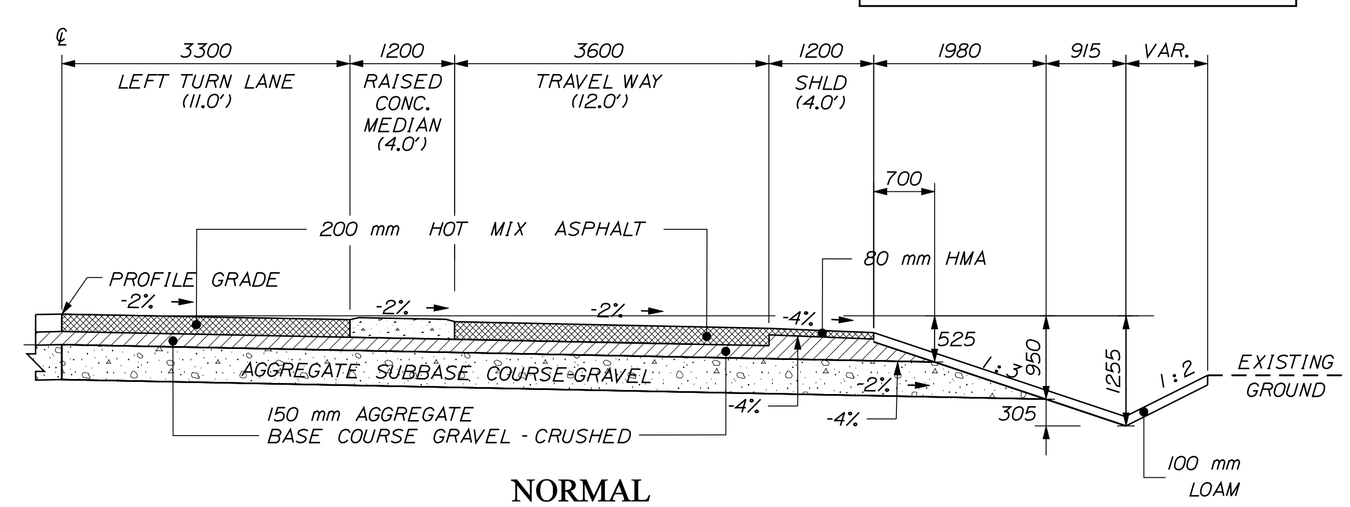

NORMAL FULL CONSTRUCTION WITH RAISED CONCRETE MEDIAN

1200 mm RAISED CONCRETE MEDIAN
150 mm A. B. C. G.-C. = 0.180 m³/m
400 mm A. S. C.-G. = 0.480 m³/m
STA. TO STA.
8+184.600 TO 8+220.000 RT.

(SEE RAISED CONCRETE MEDIAN DETAILS)

* NOTES:

1. THE PAVEMENT, BASE & SUBBASE DEPTHS AS SHOWN ON THE PLANS ARE INTENDED TO BE NOMINAL.
2. CROWNS FOR BOTH NORMAL AND SUPERELEVATED SECTIONS FOR ALL COURSES OF SUBBASE AND PAVEMENT SHALL BE STRAIGHT.
3. THE ALGEBRAIC DIFFERENCE ("ROLLOVER") BETWEEN SUPERELEVATED TRAVEL LANE CROSS SLOPE AND SHOULDER CROSS SLOPE SHALL NOT EXCEED 8%.
4. STATIONING SHOWN UNDER TYPICALS ARE APPROXIMATE AND MAY BE ADJUSTED IN THE FIELD BY THE RESIDENT.
5. STATIONING SHOWN UNDER TYPICAL SECTIONS REFLECT STATION TO STATION GRAVEL QUANTITIES & DO NOT INCLUDE TRANSITION AREAS.
6. AGGREGATE SUBBASE COURSE - GRAVEL IS ABBREVIATED AS A.S.C.-G. & AGGREGATE BASE COURSE GRAVEL - CRUSHED IS ABBREVIATED AS A.B.C.G.-C. & HOT MIX ASPHALT IS ABBREVIATED AS H.M.A.
7. AGGREGATE BASE COURSE GRAVEL - CRUSHED IS TO BE TYPE "B".
8. WHEN SUPERELEVATION EXCEEDS 4% THE LOW SIDE SHOULDERS SHALL HAVE THE SAME SLOPE AS THE TRAVELWAYS AND THE HIGH SIDE SHOULDERS SHALL BE -2%.

PROJECT DESIGN ENGINEER	BY	DATE
DESIGN-DETAILED	J. MANZER	W. ADAMS/J.H.	FEB. 2010
CHECKED	-----	-----	-----
REVISIONS	-----	-----	-----
FIELD CHANGES	-----	-----	-----

PLANS

Filename: ...\msta\002_Typical HMA 01.dgn Division: HIGHWAY Username: Sarah.K.LeBlanc Date:8/26/2011

STATE OF MAINE
DEPARTMENT OF TRANSPORTATION

TYPICAL SECTIONS

SACO - BUXTON

ROUTE 112

NOT TO SCALE

SHEET 1 OF 5 AUGUSTA, MAINE

200 mm HOT MIX ASPHALT *

FULL CONSTRUCTION - HMA (OPTION 1)

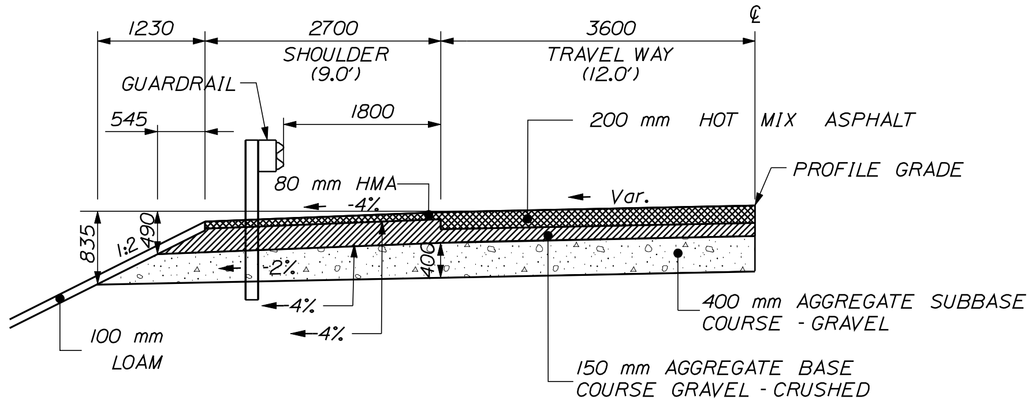

NORMAL & SUPERELEVATED FULL CONSTRUCTION

2700 mm SHOULDER WITH GUARDRAIL A. B. C. G.-C. = 0.796 m³/m** A. S. C.-G. = 1.285 m³/m**			
STA. TO STA.			
8+444.148	TO	8+483.096	Rt.
9+892.000	TO	9+991.060	Rt.
9+902.327	TO	9+974.058	Lt.
10+511.476	TO	10+632.500	Rt.
10+526.433	TO	10+603.275	Lt.
10+889.818	TO	10+981.425	Lt.
10+910.355	TO	10+944.568	Rt.

**NOTE: ASSUME -4% SHOULDER SLOPE & -2% SUBGRADE SLOPE

CONSTRUCTION JOINT DETAIL

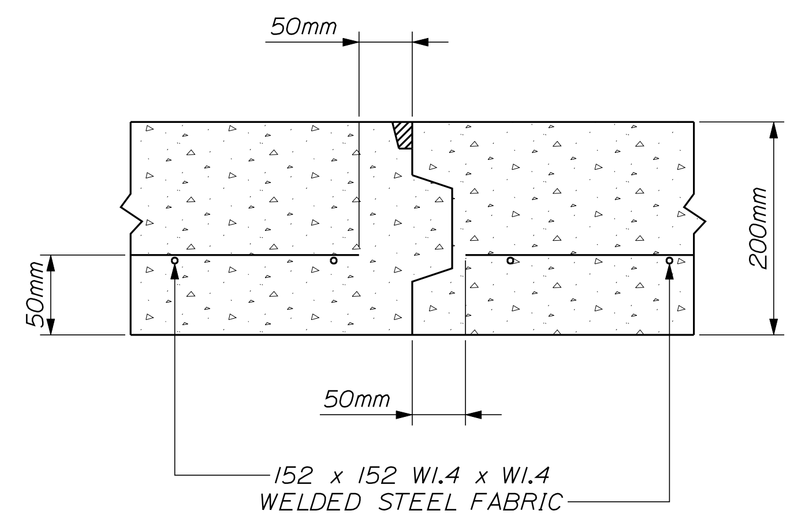

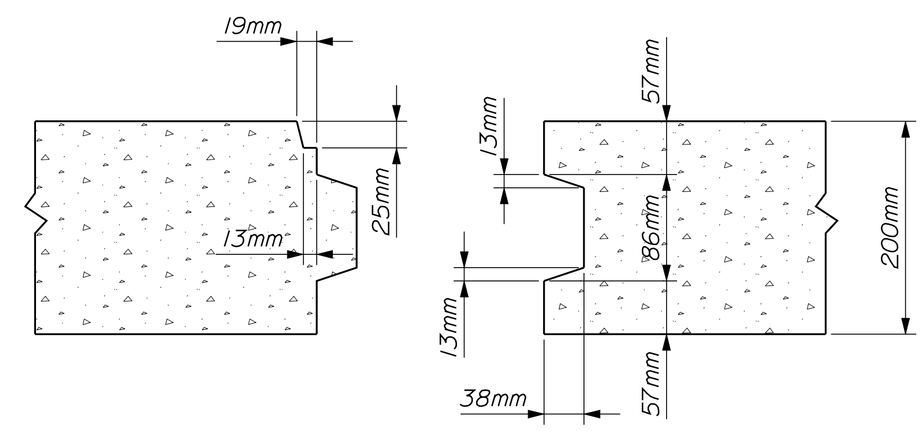

25mm RAISED CONCRETE MEDIAN

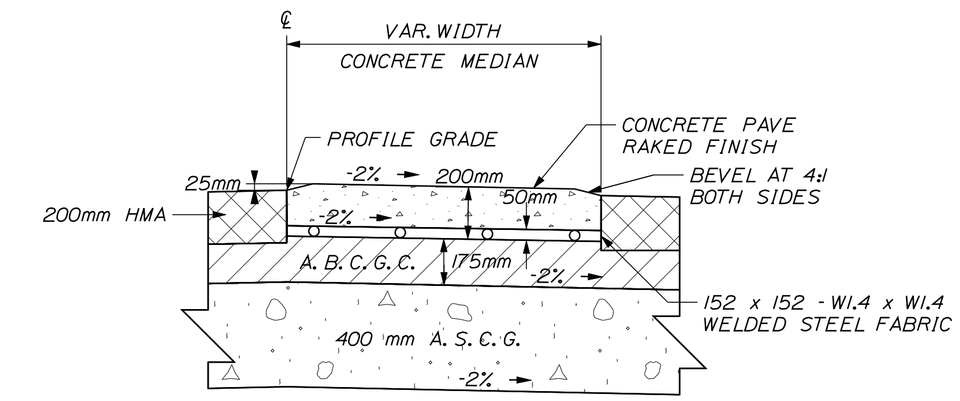

CONCRETE NOTES

1. APPLY TACK COAT (ITEM NO. 409.15) TO ALL VERTICAL JOINTS PRIOR TO PLACEMENT OF ADJACENT HOT MIX ASPHALT.
2. CONSTRUCT CONCRETE MEDIAN WITH CLASS A CONCRETE CONFORMING TO SPECIFIED GRADE AS DIRECTED BY THE RESIDENT. CONTAINING HIGH-RANGE WATER REDUCING ADMIXTURE (SUBSECTION 701.0401) AND SILICA FUME ADDITIVE.
3. SILICA FUME ADDITIVE HAS BEEN ESTIMATED AT THE RATE OF 23.7 KG PER CUBIC METER OF CONCRETE. ACTUAL RATE SHALL BE ESTABLISHED IN THE MIX DESIGN.
4. FILL ALL EXPANSION JOINTS AND SEAL WITH AN APPROVED JOINT SEALANT.
5. ALL WORK DESCRIBED, INCLUDING REINFORCEMENT, WILL BE INCIDENTAL TO ITEM 502.341, STRUCTURAL CONCRETE - ROADWAY MEDIAN, UNLESS OTHERWISE NOTED.
6. CONSTRUCT EXPANSION JOINTS AT 3m SPACING.

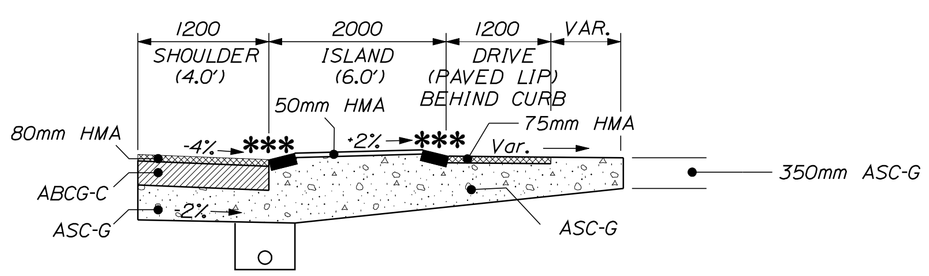

2000 PAVED ISLAND WITH GRANITE CURB TYPE 5
STA. TO STA.
6+655.000 TO 6+669.000 LT.
6+682.000 TO 6+690.000 LT.
6+702.750 TO 6+708.750 LT.
6+724.000 TO 6+742.000 LT.

***NOTE: GRANITE CURB TYPE 5 IS TO BE INSTALLED AT A 4:1 SLOPE IN ALL LOCATIONS WHERE TYPE 5 CURB IS SPECIFIED. THE ISLAND ENDS SHALL BE TIPPED DOWN, AS DIRECTED BY THE RESIDENT

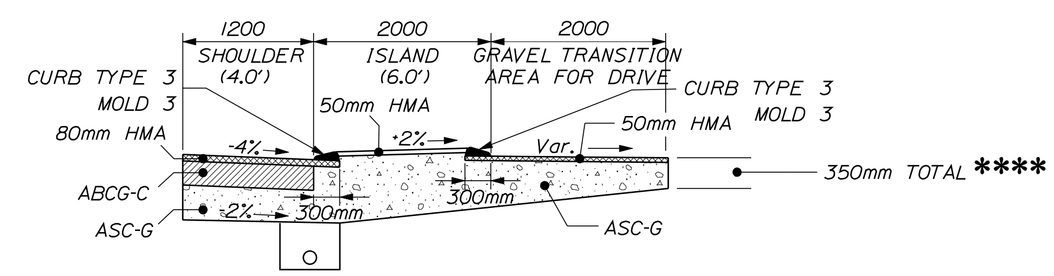

2000 PAVED ISLAND WITH CURB TYPE 3 - MOLD 3
STA. TO STA.
7+908.843 TO 7+913.228 LT. (PAVED)
9+356.205 TO 9+400.770 LT. (PAVED)
10+832.713 TO 10+839.360 RT. (GRAVEL)

****NOTE: THE 350mm TOTAL IS TO BE 50mm HMA & 300mm A.S.C.-G. IN PAVED DRIVES OR 350mm A.S.C.-G. IN UNPAVED DRIVES

* NOTES:

1. THE PAVEMENT, BASE & SUBBASE DEPTHS AS SHOWN ON THE PLANS ARE INTENDED TO BE NOMINAL.
2. CROWNS FOR BOTH NORMAL AND SUPERELEVATED SECTIONS FOR ALL COURSES OF SUBBASE AND PAVEMENT SHALL BE STRAIGHT.
3. THE ALGEBRAIC DIFFERENCE ("ROLLOVER") BETWEEN SUPERELEVATED TRAVEL LANE CROSS SLOPE AND SHOULDER CROSS SLOPE SHALL NOT EXCEED 8%.
4. STATIONING SHOWN UNDER TYPICALS ARE APPROXIMATE AND MAY BE ADJUSTED IN THE FIELD BY THE RESIDENT.
5. STATIONING SHOWN UNDER TYPICAL SECTIONS REFLECT STATION TO STATION GRAVEL QUANTITIES & DO NOT INCLUDE TRANSITION AREAS.
6. AGGREGATE SUBBASE COURSE - GRAVEL IS ABBREVIATED AS A.S.C.-G. & AGGREGATE BASE COURSE GRAVEL - CRUSHED IS ABBREVIATED AS A.B.C.G.-C. & HOT MIX ASPHALT IS ABBREVIATED AS H.M.A.
7. AGGREGATE BASE COURSE GRAVEL - CRUSHED IS TO BE TYPE "B".
8. WHEN SUPERELEVATION EXCEEDS 4% THE LOW SIDE SHOULDERS SHALL HAVE THE SAME SLOPE AS THE TRAVELWAYS AND THE HIGH SIDE SHOULDERS SHALL BE -2%.

STATE OF MAINE
DEPARTMENT OF TRANSPORTATION

TYPICAL SECTIONS

SACO - BUXTON

ROUTE 112

NOT TO SCALE

Filename: ...\msta\003_Typical HMA 02.dgn Division: HIGHWAY Username: Sarah.K.LeBlanc Date:8/26/2011

PROJECT DESIGN ENGINEER	BY	DATE
DESIGN-DETAILED	J. MANZER	BT TRAN	09/2010
CHECKED	-----	-----	-----
REVISIONS	-----	-----	-----
FIELD CHANGES	-----	-----	-----

PLANS

METRIC	1. All dimensions are in millimeters unless otherwise noted. 2. All elevations and stations are in meters.

F.H.W.A. REG. NO.	STATE	PROJECT NUMBER	SHEET NO.	TOTAL SHEETS
1	MAINE	STP-9493(100)X	4	187

9493.10

125 mm HOT MIX ASPHALT*

FULL CONSTRUCTION - PMRAP (OPTION 2)

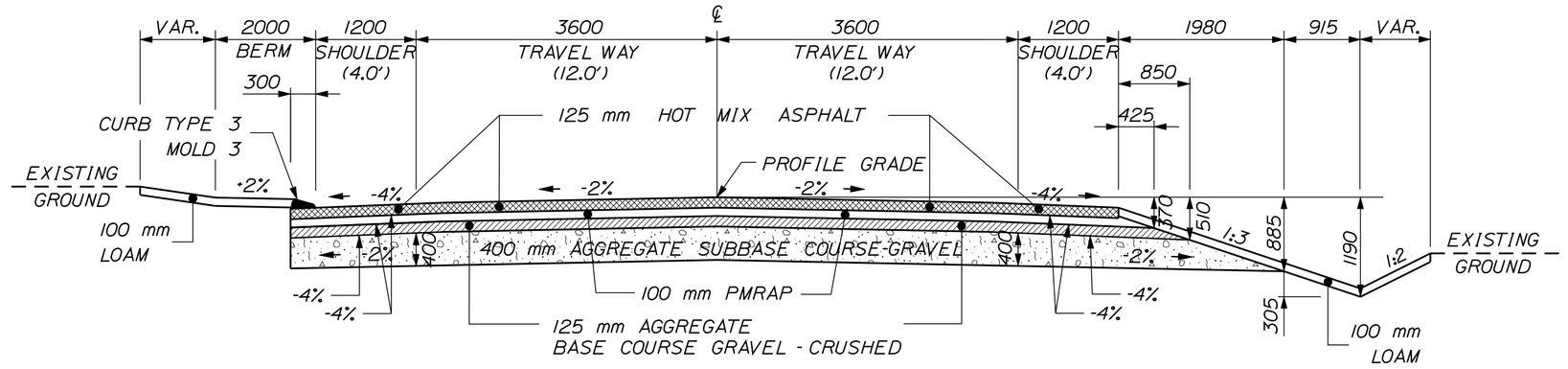

NORMAL FULL CONSTRUCTION

1200 mm SHOULDER with CURB
A. B. C. G.-C. = 0.188 m³/m
A. S. C.-G. = 0.568 m³/m
STA. TO STA.
6+608.476 TO 6+860.000 LT.
6+608.500 TO 6+706.100 RT.
6+952.635 TO 7+005.710 LT.
7+128.476 TO 7+211.520 LT.
8+080.000 TO 8+091.524 LT.
8+998.476 TO 9+061.524 LT.
9+380.000 TO 9+413.570 LT. (AT END OF DRIVE)
9+620.000 TO 9+681.476 RT.
9+858.5 TO 9+888.150 RT.
10+080.000 TO 10+220.000 LT.
10+617.460 TO 10+640.000 LT.
11+160.000 TO 11+231.500 RT.
11+160.000 TO 11+431.830 LT.

2 - 3600 mm TRAVELWAYS
125 mm A. B. C. G.-C. = 0.899 m³/m
400 mm A. S. C.-G. = 2.879 m³/m
STA. TO STA.
6+460.000 TO 7+280.000
7+600.000 TO 7+640.000
8+080.000 TO 8+300.000
8+680.000 TO 9+140.000
9+380.000 TO 9+420.000
9+620.000 TO 9+900.000
10+080.000 TO 10+220.000
10+600.000 TO 10+640.000
11+160.000 TO 11+600.000

1200 mm SHOULDER with 1:3 SLOPE	
A. B. C. G.-C. = 0.230 m³/m	
A. S. C.-G. = 0.965 m³/m	
STA. TO STA.	STA. TO STA. (cont.)
6+460.000 TO 6+600.000 LT.	8+680.000 TO 9+140.000 RT.
6+460.000 TO 6+600.000 RT.	9+380.000 TO 9+420.000 RT.
6+720.000 TO 7+280.000 RT.	9+070.000 TO 9+140.000 LT.
6+870.000 TO 6+927.466 LT.	9+620.000 TO 9+850.000 LT.
7+600.000 TO 7+640.000 RT.	9+689.000 TO 9+865.200 RT. (AT END OF CULVERT)
7+013.710 TO 7+120.000 LT.	10+080.000 TO 10+220.000 RT.
7+220.000 TO 7+280.000 LT.	11+240.000 TO 11+600.000 RT.
7+600.000 TO 7+640.000 LT.	11+440.000 TO 11+600.000 LT.
8+100.000 TO 8+125.864 LT.	
8+191.566 TO 8+300.000 LT.	
8+680.000 TO 8+980.000 LT.	

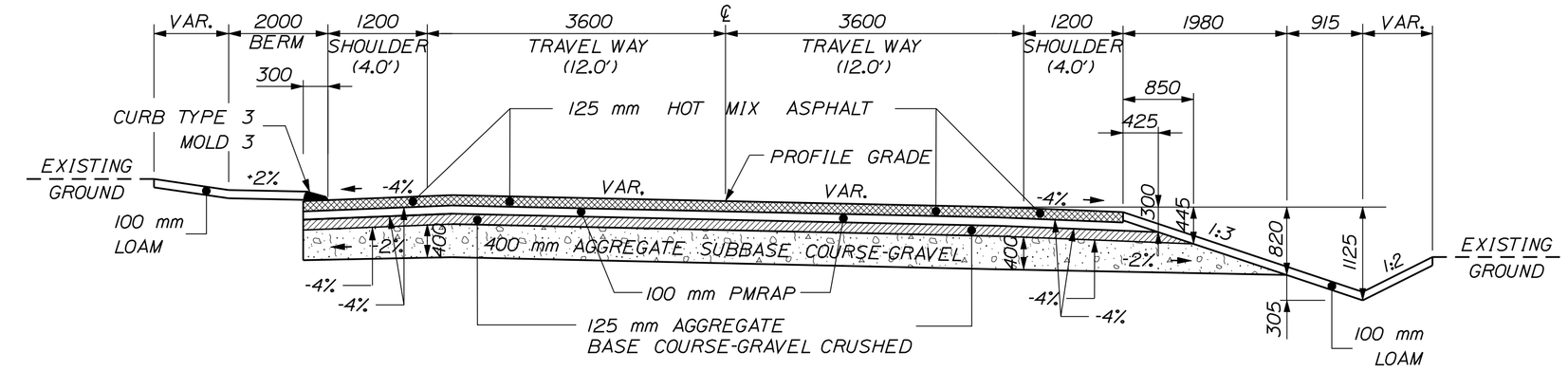

SUPERELEVATED FULL CONSTRUCTION

1200 mm SHOULDER with CURB
A. B. C. G.-C. = 0.188 m³/m
A. S. C.-G. = 0.568 m³/m
STA. TO STA.
7+340.00 TO 7+400.000 RT.
7+920.000 TO 8+020.000 LT.
9+263.476 TO 9+320.000 LT.
9+288.476 TO 9+320.000 RT.
9+518.476 TO 9+560.000 RT.
9+990.519 TO 10+020.000 LT.
10+280.000 TO 10+340.000 LT.
10+460.000 TO 10+461.830 LT.
10+700.000 TO 10+760.000 RT.
10+700.000 TO 10+760.000 LT.
10+860.000 TO 10+877.371 LT.
11+000.000 TO 11+063.410 LT.
11+020.000 TO 11+100.000 RT.

2 - 3600 mm TRAVELWAYS
125 mm A. B. C. G.-C. = 0.899 m³/m
400 mm A. S. C.-G. = 2.879 m³/m
STA. TO STA.
7+340.000 TO 7+400.000
7+440.000 TO 7+540.000
7+700.000 TO 7+800.000
7+920.000 TO 8+020.000
8+360.000 TO 8+420.000
8+520.000 TO 8+620.000
9+200.000 TO 9+320.000
9+480.000 TO 9+560.000
9+960.000 TO 10+020.000
10+280.000 TO 10+340.000
10+460.000 TO 10+540.000
10+700.000 TO 10+760.000
10+860.000 TO 10+900.000
11+000.000 TO 11+100.000

1200 mm SHOULDER with 1:3 SLOPE
A. B. C. G.-C. = 0.230 m³/m
A. S. C.-G. = 0.965 m³/m
STA. TO STA.
7+340.000 TO 7+400.000 LT.
7+440.000 TO 7+540.000 LT.
7+456.000 TO 7+540.000 RT.
7+700.000 TO 7+800.000 LT.
7+700.000 TO 7+800.000 RT.
8+520.000 TO 8+620.000 RT.
8+360.000 TO 8+420.000 LT.
8+520.000 TO 8+620.000 LT.
9+200.000 TO 9+260.000 LT.
9+200.000 TO 9+283.000 RT.
9+480.000 TO 9+510.000 RT.
9+480.000 TO 9+560.000 LT.
10+000.000 TO 10+020.000 RT.
10+280.000 TO 10+322.301 RT.
10+460.000 TO 10+480.000 RT.
10+470.000 TO 10+521.634 LT. (AT END OF CULVERT)
10+860.000 TO 10+900.000 RT.

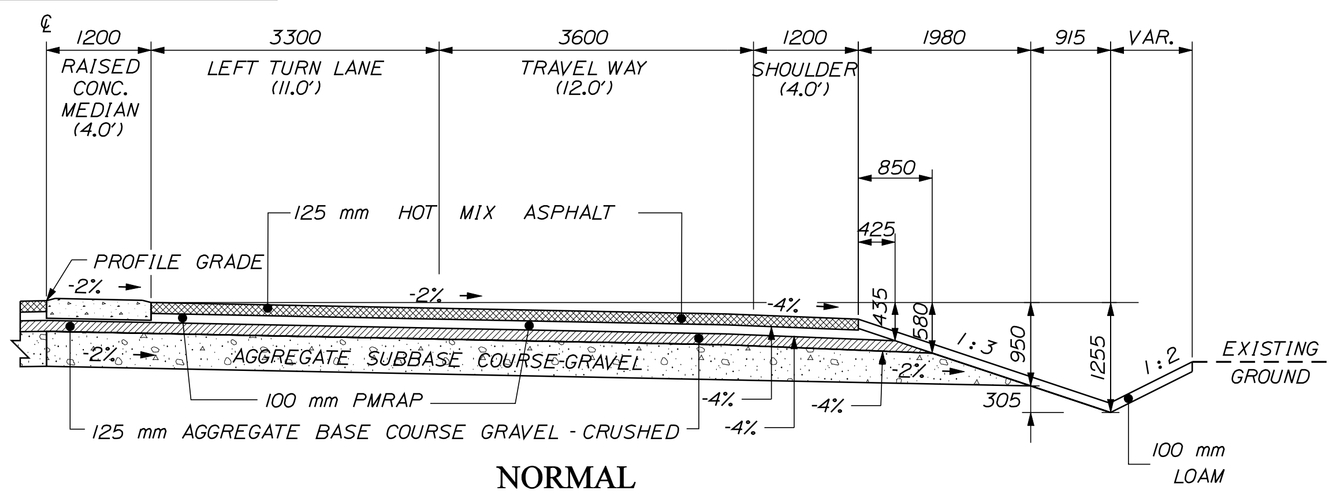

NORMAL FULL CONSTRUCTION WITH RAISED CONCRETE MEDIAN

1200 mm RAISED CONCRETE MEDIAN
125 mm A. B. C. G.-C. = 0.150 m³/m
400 mm A. S. C.-G. = 0.480 m³/m
STA. TO STA.
8+060.000 TO 8+140.000 RT.

(SEE RAISED CONCRETE MEDIAN DETAILS)

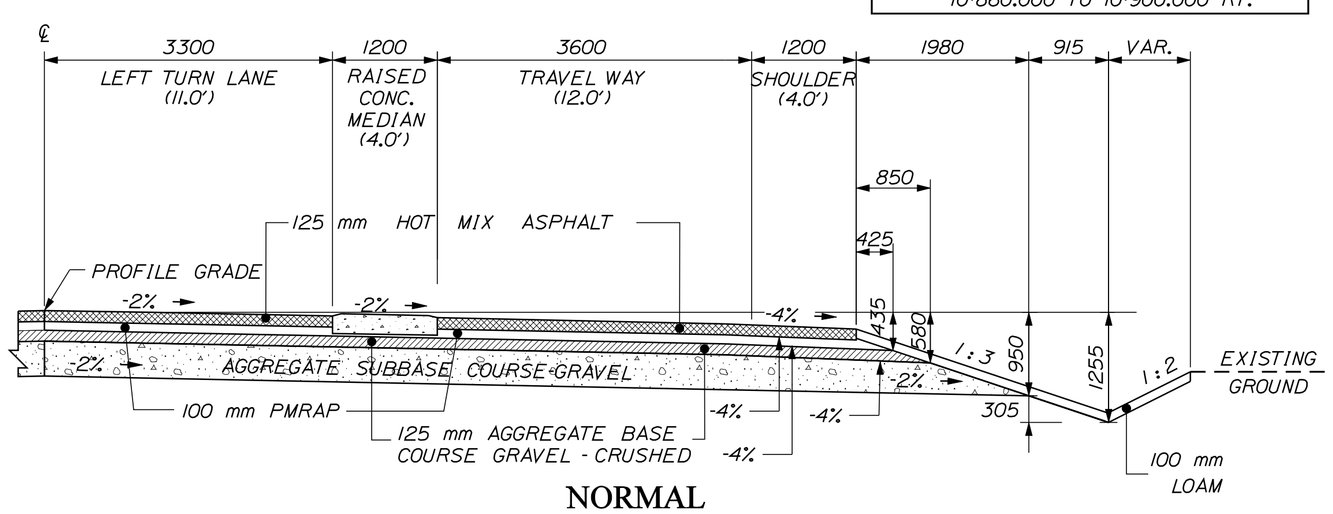

NORMAL FULL CONSTRUCTION WITH RAISED CONCRETE MEDIAN

1200 mm RAISED CONCRETE MEDIAN
125 mm A. B. C. G.-C. = 0.150 m³/m
400 mm A. S. C.-G. = 0.480 m³/m
STA. TO STA.
8+184.600 TO 8+220.000 RT.

(SEE RAISED CONCRETE MEDIAN DETAILS)

* NOTES:

1. THE PAVEMENT, BASE & SUBBASE DEPTHS AS SHOWN ON THE PLANS ARE INTENDED TO BE NOMINAL.
2. CROWNS FOR BOTH NORMAL AND SUPERELEVATED SECTIONS FOR ALL COURSES OF SUBBASE AND PAVEMENT SHALL BE STRAIGHT.
3. THE ALGEBRAIC DIFFERENCE ("ROLLOVER") BETWEEN SUPERELEVATED TRAVEL LANE CROSS SLOPE AND SHOULDER CROSS SLOPE SHALL NOT EXCEED 8%.
4. STATIONING SHOWN UNDER TYPICALS ARE APPROXIMATE AND MAY BE ADJUSTED IN THE FIELD BY THE RESIDENT.
5. STATIONING SHOWN UNDER TYPICAL SECTIONS REFLECT STATION TO STATION GRAVEL QUANTITIES & DO NOT INCLUDE TRANSITION AREAS.
6. AGGREGATE SUBBASE COURSE - GRAVEL IS ABBREVIATED AS A.S.C.-G. & AGGREGATE BASE COURSE GRAVEL - CRUSHED IS ABBREVIATED AS A.B.C.G.-C. & HOT MIX ASPHALT IS ABBREVIATED AS H.M.A.
7. AGGREGATE BASE COURSE GRAVEL - CRUSHED IS TO BE TYPE "B".
8. WHEN SUPERELEVATION EXCEEDS 4% THE LOW SIDE SHOULDERS SHALL HAVE THE SAME SLOPE AS THE TRAVELWAYS AND THE HIGH SIDE SHOULDERS SHALL BE -2%.

PROJECT DESIGN ENGINEER	BY	DATE
DESIGN-DETAILED	J. MANZER	W. ADAMS/J.H. FEB. 2010
CHECKED	-----	-----
REVISIONS	-----	-----
FIELD CHANGES		

PLANS

Filename: ...\msta\004_Typical PMRAP 01.dgn Division: HIGHWAY Username: Sarah.K.LeBlanc Date:8/26/2011

STATE OF MAINE
DEPARTMENT OF TRANSPORTATION

TYPICAL SECTIONS

SACO - BUXTON

ROUTE 112

NOT TO SCALE

AUGUSTA, MAINE

METRIC	1. All dimensions are in millimeters unless otherwise noted. 2. All elevations and stations are in meters.	F.H.W.A. REG. NO.	STATE	PROJECT NUMBER	SHEET NO.	TOTAL SHEETS
		1	MAINE	STP-9493(100)X	5	187

9493.10

125 mm HOT MIX ASPHALT *

FULL CONSTRUCTION - PMRAP (OPTION 2)

3 METER SHOULDER WITH GUARDRAIL

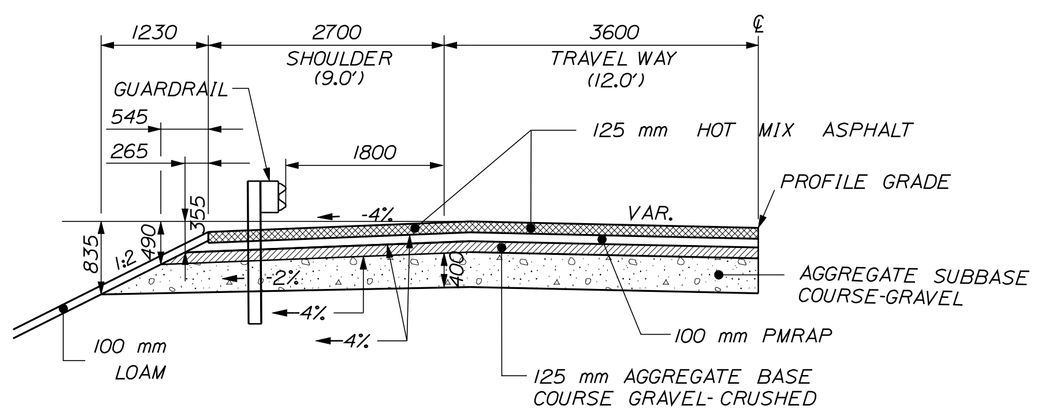

NORMAL & SUPERELEVATED FULL CONSTRUCTION

2700 mm SHOULDER WITH GUARDRAIL A. B. C. G.-C. = 0.388 m³/m** A. S. C.-G. = 1.285m³/m **			
STA. TO STA.			
8+445.148	TO	8+483.096	Rt.
9+892.000	TO	9+991.060	Rt.
9+902.327	TO	9+974.058	Lt.
10+511.476	TO	10+632.500	Rt.
10+526.433	TO	10+603.275	Lt.
10+889.818	TO	10+981.425	Lt.
10+910.355	TO	10+944.568	Rt.

**NOTE: ASSUME -4% SHOULDER SLOPE & -2% SUBGRADE SLOPE

CONSTRUCTION JOINT DETAIL

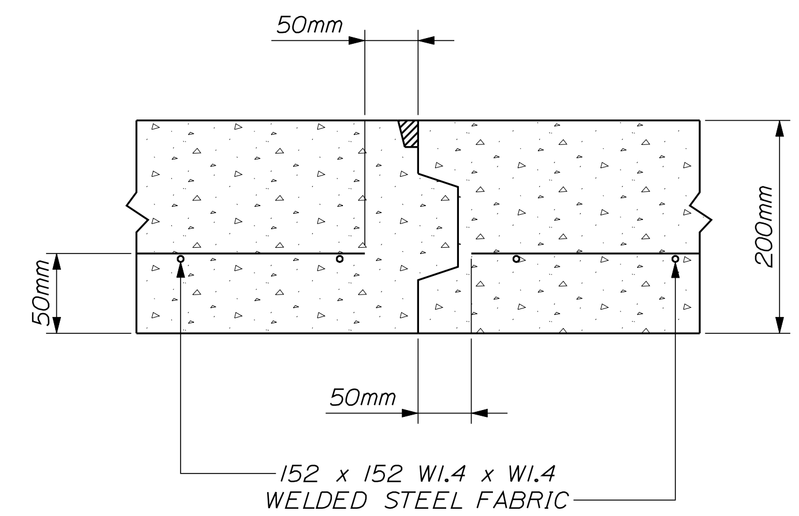

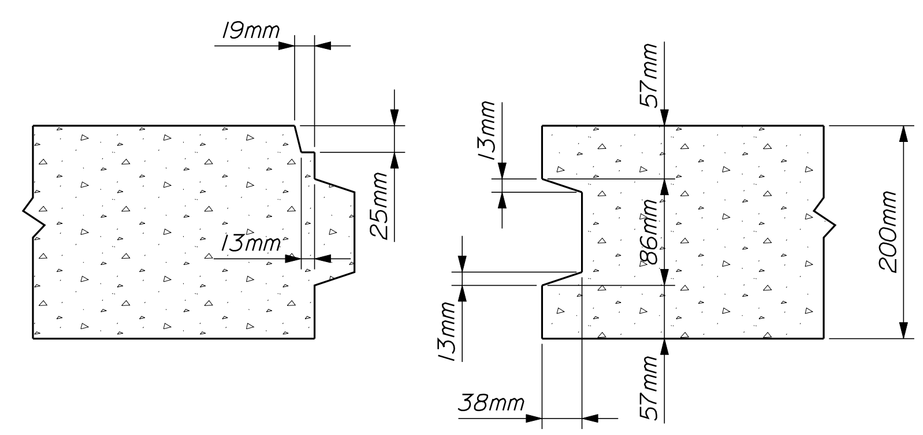

25mm RAISED CONCRETE MEDIAN

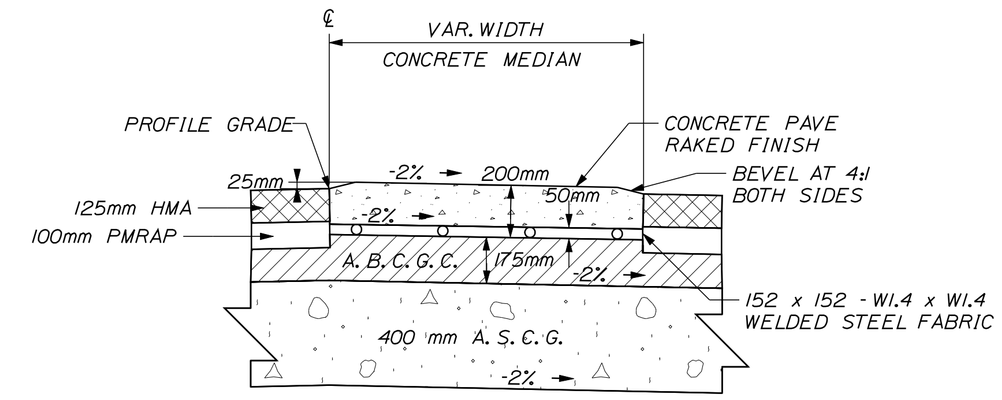

CONCRETE NOTES

1. APPLY TACK COAT (ITEM NO. 409.15) TO ALL VERTICAL JOINTS PRIOR TO PLACEMENT OF ADJACENT HOT MIX ASPHALT.
2. CONSTRUCT CONCRETE MEDIAN WITH CLASS A CONCRETE CONFORMING TO SPECIFIED GRADE AS DIRECTED BY THE RESIDENT. CONTAINING HIGH-RANGE WATER REDUCING ADMIXTURE (SUBSECTION 701.0401) AND SILICA FUME ADDITIVE.
3. SILICA FUME ADDITIVE HAS BEEN ESTIMATED AT THE RATE OF 23.7 KG PER CUBIC METER OF CONCRETE. ACTUAL RATE SHALL BE ESTABLISHED IN THE MIX DESIGN.
4. FILL ALL EXPANSION JOINTS AND SEAL WITH AN APPROVED JOINT SEALANT.
5. ALL WORK DESCRIBED, INCLUDING REINFORCEMENT, WILL BE INCIDENTAL TO ITEM 502.341, STRUCTURAL CONCRETE - ROADWAY MEDIAN, UNLESS OTHERWISE NOTED.
6. CONSTRUCT EXPANSION JOINTS AT 3m SPACING.

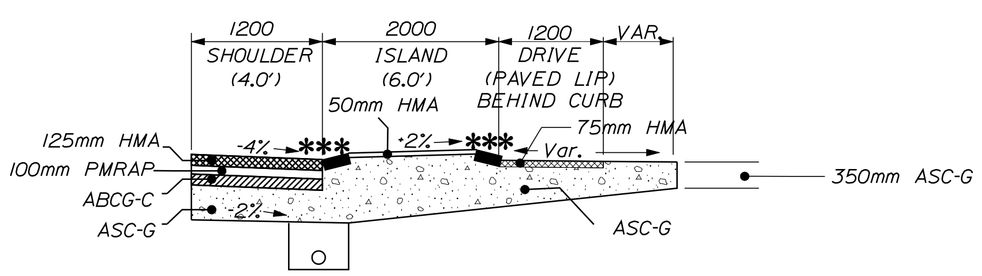

2000 PAVED ISLAND WITH GRANITE CURB TYPE 5
STA. TO STA.
6+655.000 TO 6+669.000 LT.
6+682.000 TO 6+690.000 LT.
6+702.750 TO 6+708.750 LT.
6+724.000 TO 6+742.000 LT.

***NOTE: TYPE 5 GRANITE CURB IS TO BE INSTALLED AT A 4:1 SLOPE IN ALL LOCATIONS WHERE TYPE 5 CURB IS SPECIFIED. THE ISLAND ENDS SHALL BE TIPPED DOWN, AS DIRECTED BY THE RESIDENT

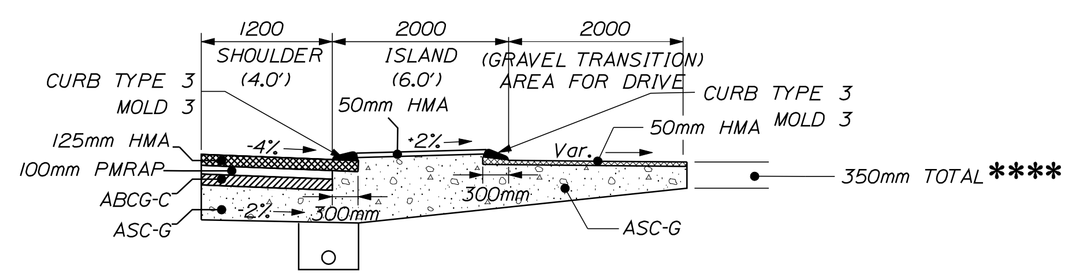

2000 PAVED ISLAND WITH CURB TYPE 3 - MOLD 3
STA. TO STA.
7+908.843 TO 7+913.228 LT. (PAVED)
9+356.205 TO 9+400.770 LT. (PAVED)
10+832.713 TO 10+839.360 RT. (GRAVEL)

****NOTE: THE 350mm TOTAL IS TO BE 50mm HMA & 300mm A.S.C.-G. IN PAVED DRIVES OR 350mm A.S.C.-G. IN UNPAVED DRIVES

* NOTES:

1. THE PAVEMENT, BASE & SUBBASE DEPTHS AS SHOWN ON THE PLANS ARE INTENDED TO BE NOMINAL.
2. CROWNS FOR BOTH NORMAL AND SUPERELEVATED SECTIONS FOR ALL COURSES OF SUBBASE AND PAVEMENT SHALL BE STRAIGHT.
3. THE ALGEBRAIC DIFFERENCE ("ROLLOVER") BETWEEN SUPERELEVATED TRAVEL LANE CROSS SLOPE AND SHOULDER CROSS SLOPE SHALL NOT EXCEED 8%.
4. STATIONING SHOWN UNDER TYPICALS ARE APPROXIMATE AND MAY BE ADJUSTED IN THE FIELD BY THE RESIDENT.
5. STATIONING SHOWN UNDER TYPICAL SECTIONS REFLECT STATION TO STATION GRAVEL QUANTITIES & DO NOT INCLUDE TRANSITION AREAS.
6. AGGREGATE SUBBASE COURSE - GRAVEL IS ABBREVIATED AS A.S.C.-G. & AGGREGATE BASE COURSE GRAVEL - CRUSHED IS ABBREVIATED AS A.B.C.G.-C. & HOT MIX ASPHALT IS ABBREVIATED AS H.M.A.
7. AGGREGATE BASE COURSE GRAVEL - CRUSHED IS TO BE TYPE "B".
8. WHEN SUPERELEVATION EXCEEDS 4% THE LOW SIDE SHOULDERS SHALL HAVE THE SAME SLOPE AS THE TRAVELWAYS AND THE HIGH SIDE SHOULDERS SHALL BE -2%.

STATE OF MAINE
DEPARTMENT OF TRANSPORTATION

TYPICAL SECTIONS

SACO - BUXTON

ROUTE 112

NOT TO SCALE

SHEET 4 OF 5 AUGUSTA, MAINE

PROJECT DESIGN ENGINEER		BY	DATE
	DESIGN-DETAILED	J. MANZER	BI TRAN	09/2010
	CHECKED	------	------	------
	REVISIONS	------	------	------
	FIELD CHANGES			

PLANS

Filename: ...\msta\005_TypicalPMRAP 02.dgn Division: HIGHWAY Username: Sarah.K.LeBlanc Date:8/26/2011

METRIC	1. All dimensions are in millimeters unless otherwise noted. 2. All elevations and stations are in meters.	F.H.W.A. REG. NO.	STATE	PROJECT NUMBER	SHEET NO.	TOTAL SHEETS
		1	MAINE	STP-9493(100)X	10	187

9493.10

ESTIMATED QUANTITIES

	Item	Item Description	Unit	Quantity
	201.11	CLEARING	HA	2.3
	201.23	REMOVING SINGLE TREE TOP ONLY	EA	101
	201.24	REMOVING STUMP	EA	105
	202.08	REMOVING BUILDING NO.: 1	LS	1
	202.08	REMOVING BUILDING NO.: 2	LS	1
	202.15	REMOVING MANHOLE OR CATCH BASIN	EA	1
	202.202	REMOVING PAVEMENT SURFACE	M2	9875
	202.203	PAVEMENT BUTT JOINTS	M2	670
	203.21	ROCK EXCAVATION	M3	100
	203.25	GRANULAR BORROW	M3	100
*	206.061	STRUCTURAL EARTH EXCAVATION - DRAINAGE AND MINOR STRUCTURES, BELOW GRADE	M3	50
*	206.07	STRUCTURAL ROCK EXCAVATION - DRAINAGE AND MINOR STRUCTURES	M3	50
	304.10	AGGREGATE SUBBASE COURSE - GRAVEL	M3	31400
	403.209	HOT MIX ASPHALT 9.5 MM (SIDEWALKS, DRIVES, INCIDENTALS)	MG	775
	403.210	HOT MIX ASPHALT 9.5 MM NOMINAL MAX SIZE	MG	2425
	403.211	HOT MIX ASPHALT (SHIM)	MG	1300
	502.341	STRUCTURAL CONCRETE ROADWAY MEDIAN	M3	225
*	512.081	FRENCH DRAINS	LS	1
	527.303	ENERGY ABSORBING SYSTEM (ETPLUS)	EA	5
	534.50	PRECAST STRUCTURAL CONCRETE INLET DAM	LS	1
	603.16	375 MM CULVERT PIPE OPTION I	M	719
	603.169	375 MM CULVERT PIPE OPTION III	M	312
	603.17	450 MM CULVERT PIPE OPTION I	M	22
	603.175	450 MM RCP CLASS III	M	52
	603.179	450 MM CULVERT PIPE OPTION III	M	70
	603.19	600 MM CULVERT PIPE OPTION I	M	25
	603.195	600 MM RCP CLASS III	M	50
	603.199	600 MM CULVERT PIPE OPTION III	M	20
	603.205	750 MM REINFORCED CONCRETE PIPE CLASS III	M	181
	603.209	750 MM CULVERT PIPE OPTION III	M	48
	603.215	900 MM REINFORCED CONCRETE PIPE CLASS III	M	27
	603.219	900 MM CULVERT PIPE OPTION III	M	10
	603.235	1200 MM REINFORCED CONCRETE PIPE CLASS III	M	25
	603.255	1500 MM RCP CLASS III	M	25
	604.09	CATCH BASIN TYPE B1	EA	2
	604.092	CATCH BASIN TYPE B1-C	EA	21
	604.096	1500 MM CATCH BASIN TYPE B1-C	EA	4.6
	604.18	ADJUSTING MANHOLE OR CATCH BASIN TO GRADE	EA	42
	604.2405	HDPE CATCH BASIN	EA	1
	604.245	CATCH BASIN TYPE F4-C	EA	5
	604.246	CATCH BASIN TYPE F5	EA	1
	604.247	CATCH BASIN TYPE F5-C	EA	10
	604.249	CATCH BASIN TYPE F6-C	EA	1
	605.09	150 MM UNDERDRAIN TYPE B	M	486
	605.10	150 MM UNDERDRAIN OUTLET	M	116
	605.11	300 MM UNDERDRAIN TYPE C	M	1018
	605.12	375 MM UNDERDRAIN TYPE C	M	520
	605.13	450 MM UNDERDRAIN TYPE C	M	138
	605.15	600 MM UNDERDRAIN TYPE C	M	361
	605.17	750 MM UNDERDRAIN TYPE C	M	175
	605.18	900 MM UNDERDRAIN TYPE C	M	139
	606.23	GUARDRAIL TYPE 3C - SINGLE RAIL	M	538
	606.232	GUARDRAIL TYPE 3C - OVER 4.5 M RADIUS	M	69
	606.265	TERMINAL END - SINGLE RAIL - GALVANIZED STEEL	EA	9
	606.353	REFLECTORIZED FLEXIBLE GUARDRAIL MARKER	EA	28
	606.356	UNDERDRAIN DELINEATOR POST	EA	46
*	606.47	SINGLE WOOD POST	EA	15
	609.31	CURB TYPE 3	M	2455
	609.34	CURB TYPE 5	M	92
	610.08	PLAIN RIPRAP	M3	100
	610.18	STONE DITCH PROTECTION	M3	95
	613.319	EROSION CONTROL BLANKET	M2	12115
	615.07	LOAM	M3	6525
	618.1301	SEEDING METHOD NUMBER 1 - PLAN QUANTITY	UN	145
	618.1401	SEEDING METHOD NUMBER 2 - PLAN QUANTITY	UN	380
	618.1411	SEEDING METHOD NUMBER 3 - PLAN QUANTITY	UN	220
	619.1201	MULCH - PLAN QUANTITY	UN	745
	620.54	STABILIZATION/REINFORCEMENT GEOTEXTILE - NON-WOVEN	M2	1000
	620.58	EROSION CONTROL GEOTEXTILE - NON-WOVEN	M2	620
	621.021	EVERGREEN TREES (600 MM - 900 MM) GROUP C	EA	12
	621.025	EVERGREEN TREES (900 MM - 1200 MM) GROUP A	EA	12
	621.026	EVERGREEN TREES (900 MM - 1200 MM) GROUP B	EA	12
	621.027	EVERGREEN TREES (900 MM - 1200 MM) GROUP C	EA	3
	621.196	MEDIUM DECIDUOUS TREE (45 MM - 50 MM CALIPER) GROUP B	EA	12
	621.267	LARGE DECIDUOUS TREE (45 MM - 50 MM CALIPER) GROUP A	EA	15
	621.269	LARGE DECIDUOUS TREE (45 MM - 50 MM CALIPER) GROUP C	EA	6
	621.388	DWARF EVERGREENS (300 MM - 375 MM)	EA	12
	621.389	DWARF EVERGREENS (375 MM - 450 MM) GROUP A	EA	12
	621.397	DWARF EVERGREENS (450 MM - 600 MM) GROUP C	EA	12
	621.402	DWARF EVERGREENS (600 MM - 750 MM) GROUP B	EA	12
	621.403	DWARF EVERGREENS (600 MM - 750 MM) GROUP C	EA	12
	621.546	DECIDUOUS SHRUBS (600 MM - 900 MM) GROUP A	EA	36
	621.71	HERBACEOUS PERENNIALS GROUP A	EA	24
	621.80	ESTABLISHMENT PERIOD	LS	1
	627.733	100 MM WHITE OR YELLOW PAINTED PAVEMENT MARKING LINE	M	44225
	627.75	WHITE OR YELLOW PAVEMENT AND CURB MARKING	M2	45
	627.76	TEMPORARY PAVEMENT MARKING LINE, WHITE OR YELLOW	LS	1
*	627.811	TEMPORARY BI-DIRECTIONAL YELLOW DELINEATORS	EA	150
	629.05	HAND LABOR, STRAIGHT TIME	HR	100
	631.12	ALL PURPOSE EXCAVATOR (INCLUDING OPERATOR)	HR	20
	631.172	TRUCK - LARGE (INCLUDING OPERATOR)	HR	40
	631.18	CHAIN SAW RENTAL (INCLUDING OPERATOR)	HR	20
	631.20	STUMP CHIPPER (INCLUDING OPERATOR)	HR	20

* *UNDETERMINED LOCATIONS*

EARTHWORK SUMMARY

	Option 1- ALL HMA			Option 2- PMRAP		
COMMON EXCAVATION FOR ESTIMATE						
COMMON EXCAVATION (FROM CROSS SECTIONS)	49,857			46,885 **		
EARTH FROM DRIVES, OLD ROAD, ETC.	3,931			3,931		
GRUBBING IN FILL	1,524			1,524		
PAVEMENT SALVAGE IN FILL	2,966			0		
TOTAL COMMON EXCAVATION			58,278			52,340
FILL FOR BORROW CALCULATIONS						
COMMON FILL (FROM CROSS SECTIONS)	8,832			8,832		
FILL FOR DRIVES	12			12		
GRUBBING IN FILL	1,524			1,524		
PAVEMENT SALVAGE IN FILL	2,966			2,966		
TOTAL FILL			13,334			13,334
ROCK EXCAVATION FOR ESTIMATE						
ROCK EXCAVATION (FROM CROSS SECTIONS)	100			100		
TOTAL ROCK EXCAVATION			100			100
AVAILABLE COMMON EXCAVATION FOR BORROW CALCULATIONS						
TOTAL COMMON EXCAVATION			58,278			52,340
DEDUCTIONS:						
GRUBBING IN CUT	9,471			9,471		
GRUBBING IN FILL	1,524			1,524		
PAVEMENT SALVAGE (CUT & FILL)	5,938					
TOTAL DEDUCTIONS			16,933			10,995
TOTAL COMMON EXCAVATION MINUS TOTAL DEDUCTIONS			41,345			41,345
TOTAL AVAILABLE STRUCT. EXCAVATIONS (UNDERDRAIN ONLY)			2,124			2,124
TOTAL AVAILABLE NON-ROCK EXCAVATION			43,469			43,469
COMPUTATION OF WASTE MATERIAL						
GRUBBING IN CUT	9,471			9,471		
GRUBBING IN FILL	1,524			1,524		
TOTAL AVAILABLE WASTE MATERIAL			10,995			10,995
COMPUTATION OF GRANULAR BORROW FOR ESTIMATE						
GRANULAR BORROW =	87	x 1.15=	100	87	x 1.15=	100
COMPUTATION FOR COMMON BORROW FOR ESTIMATE						
TOTAL FILL			13,334			13,334
TOTAL AVAIL. NON-ROCK EXCAV.	43,469 x 0.85 =	36,949		43,469 x 0.85 =	36,949	
TOTAL AVAIL. ROCK EXCAV.	100 x 1.33 =	133		100 x 1.33 =	133	
TOTAL AVAILABLE EXCAVATION			37,082		=	37,082
TOTAL AVAILABLE EXCAVATION - TOTAL FILL + TOTAL WASTE MATERIAL			**34,743**			**34,743**
(WASTE MATERIAL TO BE DISPOSED OF OFF PROJECT)						
SURPLUS MATERIAL =	**34,743**			**SURPLUS MATERIAL =**	**34,743**	

*** = EXCLUDES PAVEMENT SALVAGE IN CUT WHICH IS TO BE PAID FOR UNDER ITEM 310.24 PLANT MIX RECYCLED PAVEMENT - 100 mm*

631.22	FRONT END LOADER (INCLUDING OPERATOR)	HR	10
631.32	CULVERT CLEANER (INCLUDING OPERATOR)	HR	10
639.18	FIELD OFFICE TYPE A	EA	1
652.31	TYPE I BARRICADE	EA	25
652.311	TYPE II BARRICADE	EA	25
652.33	DRUM	EA	75
652.34	CONE	EA	200
652.35	CONSTRUCTION SIGNS	M2	100
652.361	MAINTENANCE OF TRAFFIC CONTROL DEVICES	LS	1
652.38	FLAGGER	HR	10000
656.75	TEMPORARY SOIL EROSION AND WATER POLLUTION CONTROL	LS	1
658.20	ACRYLIC LATEX COLOR FINISH, GREEN	M2	200
659.10	MOBILIZATION	LS	1
660.21	ON-THE-JOB TRAINING (BID)	HR	4000
803.01	TEST PITS	EA	3
823.332	GATE VALVE BOX, ADJUST TO GRADE	EA	10

ALTERNATE 1

203.20	COMMON EXCAVATION	M3	58300
304.09	AGGREGATE BASE COURSE - CRUSHED	M3	10700
403.208	HOT MIX ASPHALT 12.5 MM, SURFACE	MG	6700
403.213	HOT MIX ASPHALT 12.5 MM, BASE	MG	18200
409.15	BITUMINOUS TACK COAT APPLIED	L	22125

ALTERNATE 2

203.20	COMMON EXCAVATION	M3	52400
304.09	AGGREGATE BASE COURSE - CRUSHED	M3	7500
310.24	PLANT MIX RECYCLED ASPHALT PAVEMENT - 100 MM DEPTH	M2	52700
403.208	HOT MIX ASPHALT 12.5 MM, SURFACE	MG	6700
403.213	HOT MIX ASPHALT 12.5 MM, BASE	MG	12900
409.15	BITUMINOUS TACK COAT APPLIED	L	24450

STATE OF MAINE
DEPARTMENT OF TRANSPORTATION

ESTIMATED QUANTITIES
&
EARTHWORK SUMMARY

SACO - BUXTON

ROUTE 112

SHEET 1 OF 1 AUGUSTA, MAINE

PROJECT DESIGN ENGINEER		BY	DATE
DESIGN-DETAILED	J. MANZER	W. ADAMS/J.H.	FEB 2010
CHECKED	------	------	------
REVISIONS	------	------	------
FIELD CHANGES			

PLANS

Filename: ...\highway\msto\010_Estimate.dgn Division: HIGHWAY Username: Sarah.K.LeBlanc Date:8/26/2011

METRIC	1. All dimensions are in millimeters unless otherwise noted. 2. All elevations and stations are in meters.	F.H.W.A. REG. NO.	STATE	PROJECT NUMBER	SHEET NO.	TOTAL SHEETS
		1	MAINE	STP-9493(100)X	11	187

9493.10

STATION	CULVERT PIPE RCP SIZE	CULVERT PIPE RCP LENGTH	CULVERT PIPE RCP CLASS	CULVERT PIPE OPTION I SIZE	CULVERT PIPE OPTION I LENGTH	CULVERT PIPE OPTION III SMOOTHLINED SIZE	CULVERT PIPE OPTION III SMOOTHLINED LENGTH	CULVERT PIPE OPTION III CORRUGATED SIZE	CULVERT PIPE OPTION III CORRUGATED LENGTH	CATCH BASIN B1	CATCH BASIN B1-C	CATCH BASIN F4-C	CATCH BASIN F5	CATCH BASIN F5-C	CATCH BASIN F6-C	CATCH BASIN HDPE	PIPE ARCH RISE	PIPE ARCH LENGTH	PIPE ARCH GAGE OR WALL THICKNESS	MH	UNDERDRAIN TYPE B TYPE B LENGTH	UNDERDRAIN TYPE B OUTLET LENGTH	UNDERDRAIN TYPE C SMOOTHLINED SIZE	UNDERDRAIN TYPE C SMOOTHLINED LENGTH	UNDERDRAIN TYPE C CORRUGATED SIZE	UNDERDRAIN TYPE C CORRUGATED LENGTH	ELBOWS, TEES, WYES AND INLET GRATE UNITS DESCRIPTIONS	REMARKS
CATCHBASINS																												
CB #1- STA. 6+610.000, LT												1																
CB #2- STA. 6+610.000, RT												1																
CB #3- STA. 6+685.850, LT												1																
CB #3A- STA. 6+704.706, RT													1															
CB #4- STA. 6+780.000, LT												1																
CB #4A- STA. 7+130.000, LT														1														
STA. 7+144.068, 7.485 m LT																1												
CB #5- STA. 7+210.000, LT														1														
CB #6- STA. 7+911.022, LT											1																	
CB #7- STA. 8+030.000, LT											1																	
CB #8- STA. 8+090.000, LT											1																	WITH FLAT TOP
CB #9- STA. 9+000.000, LT											1																	WITH FLAT TOP
CB #9A- STA. 9+060.000, LT											1																	
CB #10- STA. 9+265.000, LT														1														
CB #11- STA. 9+290.000, RT														1														
CB #12- STA. 9+340.000, LT														1														
CB #13- STA. 9+360.000, RT														1														
CB #14- STA. 9+415.000, LT															1													
CB #15- STA. 9+520.000, RT												1																
CB #16- STA. 9+620.000, RT														1														
CB #17- STA. 9+680.000, RT												1																
CB #17A- STA. 9+860.000, LT											1																	
CB #17B- STA. 9+886.626, LT											1																	
CB #18- STA. 9+992.043, LT											1																	WITH FLAT TOP
CB #19- STA. 10+078.762, LT											1																	WITH FLAT TOP
CB #19A- STA. 10+289.085, LT											1.6																	1500 mm OVERSIZED BASIN
CB #20- STA. 10+335.592, LT											1																	
CB #21- STA. 10+460.000, LT														1														
CB #22- STA. 10+620.000, LT											1																	
CB #23- STA. 10+666.550, RT														1														
CB #24- STA. 10+700.000, LT											1																	
CB #25- STA. 10+875.237, LT											1																	WITH FLAT TOP
CB #26- STA. 10+925.000, LT											1.6																	1500 mm OVERSIZED BASIN
CB #27- STA. 11+000.000, LT											1.6																	
CB #28- STA. 11+063.320, LT											1.4																	1500 mm OVERSIZED BASIN
CB #29- STA. 11+063.520, RT											1																	
CB #30-STA. 11+103.027, LT											1.2																	
CB #31- STA. 11+150.000, RT											1																	
CB #32- STA. 11+170.000, LT											1.2																	
CB #33- STA. 11+230.000, LT											1																	
CB #34-STA. 11+230.000, RT										1																		
CB #35- STA. 11+321.974, LT											1																	
CB #36- STA. 11+430.000, LT										1																		
OPTION III																												
CB #1 TO STA. 6+600.000, LT						375	9.75	375	9.75																			RIPRAP OUTLET
CB #2 TO STA. 6+600.000, RT						375	9.75	375	9.75																			RIPRAP OUTLET
CB #3A TO STA. 6+720.000, RT						375	15.85	375	15.85																			RIPRAP INLET
CB #4A TO STA. 7+120.000, LT						450	9.75	450	9.75																			RIPRAP INLET
CB #5 TO STA. 7+220.000, LT						450	9.75	450	9.75																			RIPRAP OUTLET
CB #6 TO STA. 7+890.000, LT						375	20.75	375	20.75																			RIPRAP OUTLET
CB #8 TO STA. 8+100.000, LT						375	9.75	375	9.75																			RIPRAP OUTLET
CB #9 TO STA. 8+980.000, LT						600	19.50	600	19.50																			RIPRAP OUTLET
STA. 8+996.290 TO STA. 9+011.540, RT						375	15.25	375	15.25																			RIPRAP INLET & OUTLET
CB #9A TO STA. 9+070.000, LT						450	9.75	450	9.75																			RIPRAP INLET
STA. 9+132.130 TO STA. 9+150.370, RT						375	18.25	375	18.25																			RIPRAP INLET & OUTLET
CB #10 TO STA. 9+260.000, LT						375	6.10	375	6.10																			RIPRAP OUTLET
CB #11 TO STA. 9+283.000, RT						375	7.95	375	7.95																			RIPRAP OUTLET
CB #13 TO STA. 9+369.000, RT						375	8.55	375	8.55																			RIPRAP INLET
CB #14 TO STA. 9+420.000, LT						375	6.00	375	6.00																			RIPRAP INLET
CB #15 TO STA. 9+510.000, RT						375	9.75	375	9.75																			RIPRAP OUTLET
STA. 9+523.370 TO STA. 9+539.750, LT						375	15.85	375	15.85																			RIPRAP INLET & OUTLET
CB #17 TO STA. 9+689.080, RT						375	8.55	375	8.55																			RIPRAP OUTLET
STA. 9+780.150 TO STA. 9+796.000, RT						375	15.85	375	15.85																			RIPRAP INLET & OUTLET
STA. 9+813.460 TO STA. 9+829.310, LT						375	15.85	375	15.85																			RIPRAP INLET & OUTLET
CB #17A TO STA. 9+850.000, LT						375	9.75	375	9.75																			RIPRAP INLET
CB #17B TO STA. 9+900.000, LT						375	14.65	375	14.65																			RIPRAP OUTLET
CB #18 TO STA. 9+975.000, LT						375	17.05	375	17.05																			RIPRAP OUTLET
CB #19A TO STA. 0+053.000, LT (DITCH EXTENSION)								750	47.55																		PLUS ELBOW	RIPRAP OUTLET
STA. 10+325.400 TO STA. 10+343.630, RT						375	18.25	375	18.25																			RIPRAP INLET & OUTLET
CB #21 TO STA. 10+470.000, LT						375	10.35	375	10.35																			RIPRAP OUTLET
CB #22 TO STA. 10+600.000, LT						450	20.75	450	20.75																			RIPRAP OUTLET
CB #23 TO STA. 10+650.000, RT						375	17.05	375	17.05																			RIPRAP OUTLET
CB #25 TO STA. 10+890.000, LT						375	15.75	375	15.75																			RIPRAP OUTLET
CB #26 TO STA. 10+922.000, LT						900	9.75	900	9.75																			RIPRAP OUTLET
CB #34 TO STA. 11+240.000, RT						450	9.75	450	9.75																			RIPRAP INLET
STA. 11+416.700 TO STA. 11+432.000, RT						375	15.25	375	15.25																			RIPRAP INLET & OUTLET
CB #36 TO STA. 11+440.000, LT						450	9.75	450	9.75																			RIPRAP INLET

PROJECT DESIGN ENGINEER	BY	DATE
DESIGN-DETAILED	J. MANZER	-----
CHECKED	W. ADAMS/J.H.	-----
REVISIONS	-----	-----
FIELD CHANGES	-----	-----

PLANS

STATE OF MAINE
DEPARTMENT OF TRANSPORTATION

DRAINAGE SHEET

SACO - BUXTON

ROUTE 112

SHEET 1 OF 3 AUGUSTA, MAINE

Filename: ...\msta\011_Drainage_1.dgn Division: HIGHWAY Username: Sarah.K.LeBlanc Date:8/26/2011

METRIC 1. All dimensions are in millimeters unless otherwise noted. 2. All elevations and stations are in meters.

F.H.W.A. REG. NO.	STATE	PROJECT NUMBER	SHEET NO.	TOTAL SHEETS
1	MAINE	STP-9493(100)X	12	187

9493.10

STATION	CULVERT PIPE RCP SIZE	CULVERT PIPE RCP LENGTH	CULVERT PIPE RCP CLASS	CULVERT PIPE OPTION I SIZE	CULVERT PIPE OPTION I LENGTH	CULVERT PIPE OPTION III SMOOTHLINED SIZE	CULVERT PIPE OPTION III SMOOTHLINED LENGTH	CULVERT PIPE OPTION III CORRUGATED SIZE	CULVERT PIPE OPTION III CORRUGATED LENGTH	CATCH BASIN B1	CATCH BASIN B1-C	CATCH BASIN F4-C	CATCH BASIN F5	CATCH BASIN F5-C	CATCH BASIN F6-C	CATCH BASIN HDPE	PIPE ARCH RISE	PIPE ARCH LENGTH	PIPE ARCH GAGE OR WALL THICKNESS	MH	UNDERDRAIN TYPE B LENGTH	UNDERDRAIN TYPE B OUTLET LENGTH	UNDERDRAIN TYPE C SMOOTHLINED SIZE	UNDERDRAIN TYPE C SMOOTHLINED LENGTH	UNDERDRAIN TYPE C CORRUGATED SIZE	UNDERDRAIN TYPE C CORRUGATED LENGTH	ELBOWS, TEES, WYES AND INLET GRATE UNITS DESCRIPTIONS	REMARKS
UNDERDRAIN																												
CB #1 TO CB #3, LT																							300	74.70				
CB #3 TO CB #4, LT																							300	92.90				
CB #4 TO STA. 6+860.000, LT																					79.40							
CB #2 TO CB #3A, RT																							375	93.60				
CB #4A TO CB #5, LT																							450	78.80				
STA. 7+300.000 TO STA. 7+320.000, RT																						20.40					PLUS ELBOW	
STA. 7+320.000 TO STA. 7+440.000, RT																					117.10							
STA. 7+440.000 TO STA. 7+456.000, RT																						16.30					PLUS ELBOW	
CB #6 TO CB #7, LT																							300	99.20				
CB #7 TO CB #8, LT																							300	58.80				
CB #9 TO CB #9A, LT																							450	58.80				
CB #10 TO CB #12, LT																							375	72.80				
CB #12 TO CB #14, LT																							375	73.80				
CB #11 TO CB #13, RT																							300	69.50				
CB #15 TO CB #16, RT																							300	99.40				
CB #16 TO CN #17, RT																							300	58.80				
CB #17A TO CB #17B, LT																							375	25.60				
CB #18 TO CB #19, LT																							300	86.80				
CB #19 TO CB #19A, LT																							300	209.00				
CB #19A TO CB #20, LT																							300	45.40				
CB #20 TO CB #21, LT																							300	122.80				
CB #22 TO CB #24, LT																							375	78.90				
CB #24 TO CB #25, LT																							375	174.40				
CB #23 TO STA. 10+790.000, RT																					123.00							
STA. 10+790.000 TO STA. 10+800.000, RT																						10.50						
CB #26 TO CB #27, LT																							900	74.10				
CB #27 TO CB #28, LT																							900	64.10				
CB #28 TO CB #30, LT																							750	39.60				
CB #30 TO CB #32, LT																							750	66.40				
CB #32 TO CB #33, LT																							750	68.80				
CB #33 TO CB #35, LT																							600	90.80				
CB #35 TO CB #36, LT																							600	106.80				
STA. 11+000.000 TO STA. 11+020.000, RT																						20.30						
STA. 11+020.000 TO STA. 11+060.000, RT																					40.00							
CB #29 TO CB #31, RT																							600	84.00				
CB #31 TO CB #34, RT																							600	78.80				
CB #28 TO STA. 38+060.000, LT (BOYNTON RD.)																					73.00							
CB #30 TO STA. 38+060.000, RT (BOYNTON RD.)																					53.20							
STA. 7+144.068 LT.																						2.70						CELLAR DRAIN CONNECTION
STA. 7+167.076 RT.																						5.00						CELLAR DRAIN CONNECTION
STA. 8+925.262 RT.																						5.00						CELLAR DRAIN CONNECTION
STA. 8+959.679 RT.																						5.00						CELLAR DRAIN CONNECTION
STA. 9+084.694 RT.																						5.00						CELLAR DRAIN CONNECTION
STA. 9+706.556 LT.																						5.00						CELLAR DRAIN CONNECTION
STA. 9+797.003 LT.																						5.00						CELLAR DRAIN CONNECTION
STA. 9+901.290 RT.																						5.00						CELLAR DRAIN CONNECTION
STA. 11+456.551 RT.																						5.00						CELLAR DRAIN CONNECTION
STA. 11+526.752 RT.																						5.00						CELLAR DRAIN CONNECTION
CROSS PIPES (RCP)																												
STA. 6+876.625, 6.4m RT TO STA. 6+878.117, 6.9m LT	450	13.40	III																									RIPRAP INLET & OUTLET
STA. 7+295.430, 7.3m LT TO STA. 7+295.430, 7.3m RT	450	14.65	III																									RIPRAP INLET & OUTLET
STA. 7+695.640, 12.0 RT TO STA. 7+698.000, 11.0m LT	450	23.15	III																									RIPRAP INLET & OUTLET
STA. 8+180.000, 11.2m LT TO STA. 8+180.000, 12.0m RT	750	23.15	III																									RIPRAP INLET & OUTLET TWIN CULVERTS
STA. 8+180.000, 11.2m LT TO STA. 8+180.000, 12.0m RT	750	23.15	III																									
STA. 8+301.740, 10.5m RT TO STA. 8+303.870, 8.5m LT	750	19.50	III																									RIPRAP INLET & OUTLET TWIN CULVERTS
STA. 8+301.740, 10.5m RT TO STA. 8+303.870, 8.5m LT	750	19.50	III																									
STA. 8+442.230, 15.8m LT TO STA. 8+473.400, 15.0m RT	750	43.90	III																									RIPRAP INLET & OUTLET
STA. 8+831.250, 7.2m RT TO STA. 8+831.250, 7.5m LT	600	14.65	III																									RIPRAP INLET & OUTLET
STA. 9+927.700, 12.5m LT TO STA. 9+933.500, 11.3m RT	1500	24.50	III																									RIPRAP INLET & OUTLET WITH PRECAST WEIRS
CB #19A LT TO STA. 10+293.410, 9.6m RT	750	14.65	III																									RIPRAP INLET
STA. 10+566.600, 14.1m LT TO STA. 10+571.300, 12.4m RT	900	26.85	III																									RIPRAP INLET & OUTLET
STA. 10+914.400, 10.5m RT TO STA. 10+914.400, 14.8m LT	1200	24.40	III																									RIPRAP INLET & OUTLET
CB #28 LT TO CB #29 RT	600	8.25	III																									
STA. 29+030.000, 6.7m LT TO STA. 29+030.000, 6.7m RT	750	13.40	III	(GRANT RD.)																								RIPRAP INLET & OUTLET TWIN CULVERTS
STA. 29+030.000, 6.7m LT TO STA. 29+030.000, 6.7m RT	750	13.40	III	(GRANT RD.)																								
STA. 30+060.000, 11.2m LT TO STA. 30+060.000, 7.0m RT	750	18.25	III	(RT. 117)																								RIPRAP INLET & OUTLET TWIN CULVERTS
STA. 30+060.000, 11.2m LT TO STA. 30+060.000, 7.0m RT	750	18.25	III	(RT. 117)																								

PROJECT DESIGN ENGINEER	BY	DATE
DESIGN-DETAILED	J. MANZER	WA\JH\NC\SL
CHECKED	------	------
REVISIONS	------	------
FIELD CHANGES	------	------

PLANS

Filename: ...\msta\012_Drainage_2.dgn Division: HIGHWAY Username: Sarah.K.LeBlanc Date:8/26/2011

STATE OF MAINE
DEPARTMENT OF TRANSPORTATION

DRAINAGE SHEET

SACO - BUXTON

ROUTE 112

SHEET 2 OF 3 AUGUSTA, MAINE