STANDARD H-BEAM POSTS for TYPE 1 SIGNS

SINGLE SUPPORT SIGNS								
Foundation Size	Sign Area (A)	Sign Width (W)	Post Size	Base Plate (1), (3)	Material	Anchor Bolts (2)	Bolt Circle	Maximum Mounting Height
	$0 - 1m^2$	Use Wood Posts			A709 Grade 250			4m to Center of Sign
450	$1 < A \leq 1.5m^2$	W = 1 200 Max. But includes 1 500 Yield Sign	W150X14	300X300X25 18kg		24M X 900'	300	
450	$1.5 < A \leq 2.3m^2$	W = 1 500 Max.	W150X22	300X300X25 18kg		24M X 900	300	
600	$2.3 < A \leq 3.9m^2$	W = 2 100 Max.	W200X36	350X350X25 25kg		30M X 1 050	350	
MULTIPLE SUPPORT SIGNS								
600	To $5.5m^2$/Post	Varible	W200X27	350X350X25 25kg	A709 Grade 250	30M X 1 050	350	6m to Center of Sign
600	$5.5 - 7.9m^2$/Post		W250X33	300X430X32 33kg		30M X 1 050	375	
750	$7.9 - 10.2m^2$/Post		W300X39	330X480X32 40kg		36M X 1 200	425	
750	$10.2 - 12.5m^2$/Post		W350X44	350X530X32 47kg		36M X 1 200	475	

NOTES-

(1) Bolts to be 50,000 PSI minimum yield strength.
(2) Post to base plate weld shall be 8mm ($^5/_{16}$") fillet weld.
(3) Base plates and H-Beams shall be hot dipped galvanized after fabrication in accordance with section 720.06.
(4) Payment for the weight of base plate shall be incidental to ITEM NO. 645.289.
(5) Posts to be equipped with breakaway devices shall have holes drilled or punched before galvanizing.
Posts equipped with breakaway devices shall have the post size die stamped, before galvanizing, near the bottom end of beam.
(6) W - Shapes utilized with Breakaway Devices shall be in strict conformance with ASTM A6, Table 16, A, Depth.
(7) Anchors for use with breakaway devices shall be set for the deepest potential W-Shape, depth +4mm ($^1/_8$"). Gaps between the post (W-Shape) and the breakaway device shall be filled with galvanized shims that have the same area and hole pattern as the breakaway device. The maximum difference between the breakaway device opening and beam depth, including shims, is 2mm ($^1/_{16}$"). Shims will be incidental to the breakaway device.

ANCHOR BOLT LAYOUT

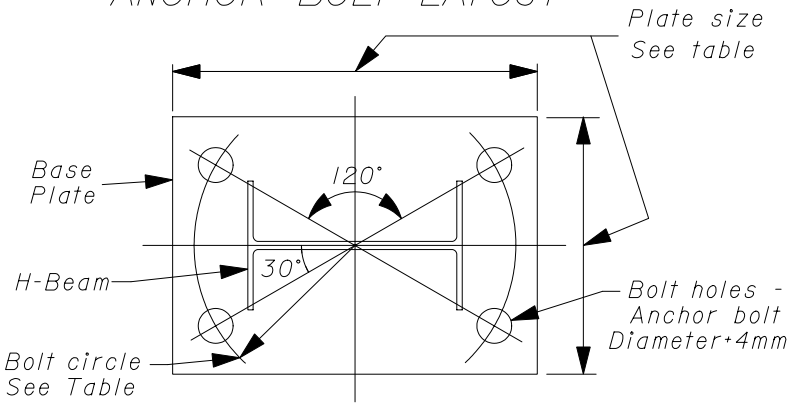

W250X33, W300X39, W350X44

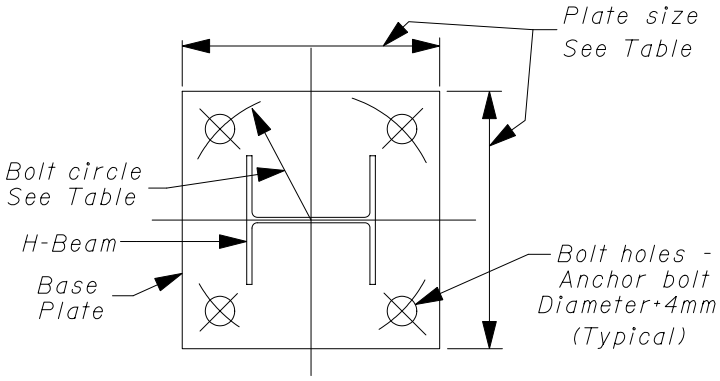

W150X14, W150X22, W200X27, W200X36

H-BEAM POSTS
HIGHWAY SIGNING

645(06)

Revised July 21, 2004

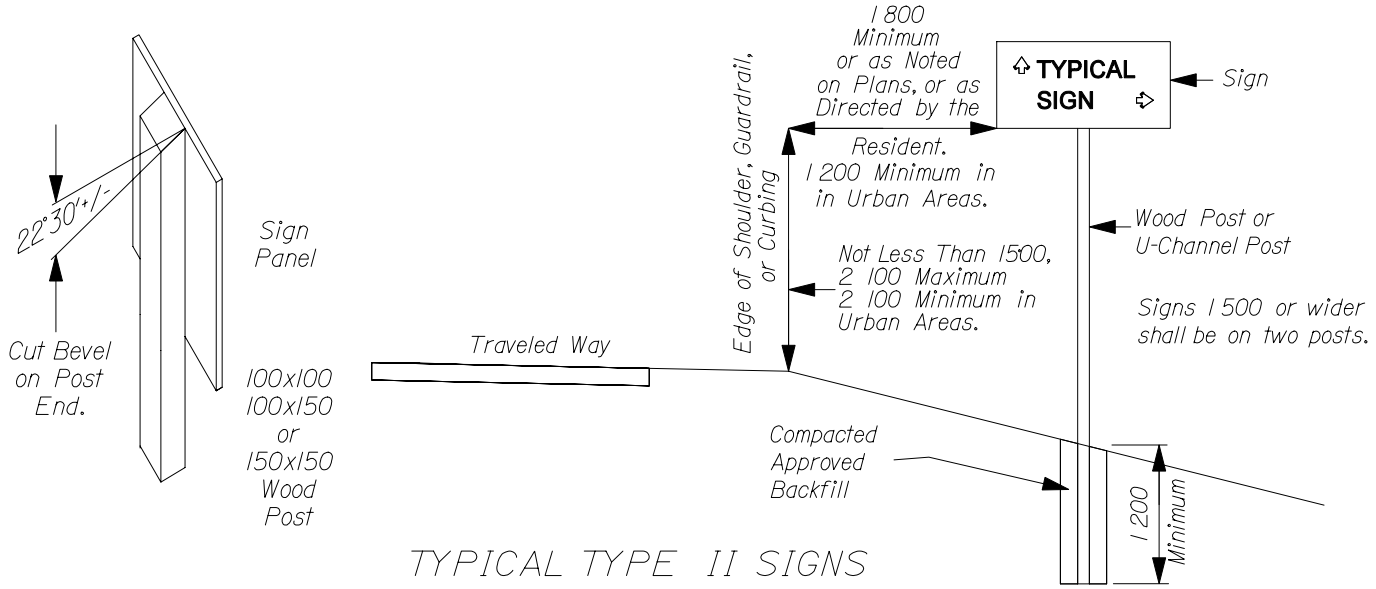

TYPICAL TYPE II SIGNS

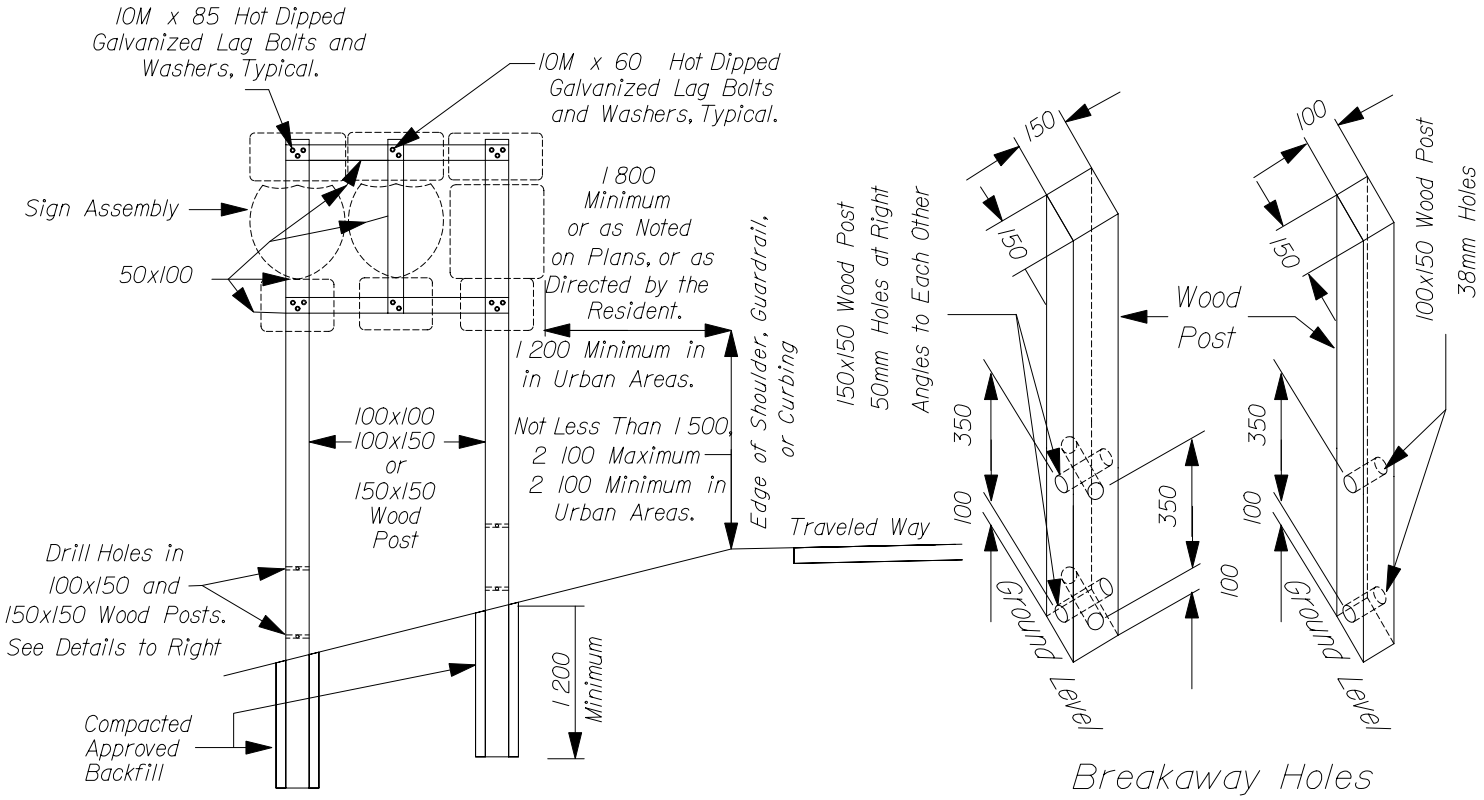

TYPICAL SIGN ASSEMBLY

Breakaway Holes in Wood Posts

NOTES:

Refer to Section 645.061 of the Standard Specifications to determine the size of wood posts. All wood posts and brackets shall be pressure treated to CCA 40.

On 150x150 and 100x150 wood posts, drill holes as shown above, to meet breakaway standards.

ITEM NO. 645.291
ITEM NO. 645.292

INSTALLATION OF TYPE II SIGNS

HIGHWAY SIGNING

645(09)

Revised 1 - 17 - 2003