GUARDRAIL STANDARD DETAIL

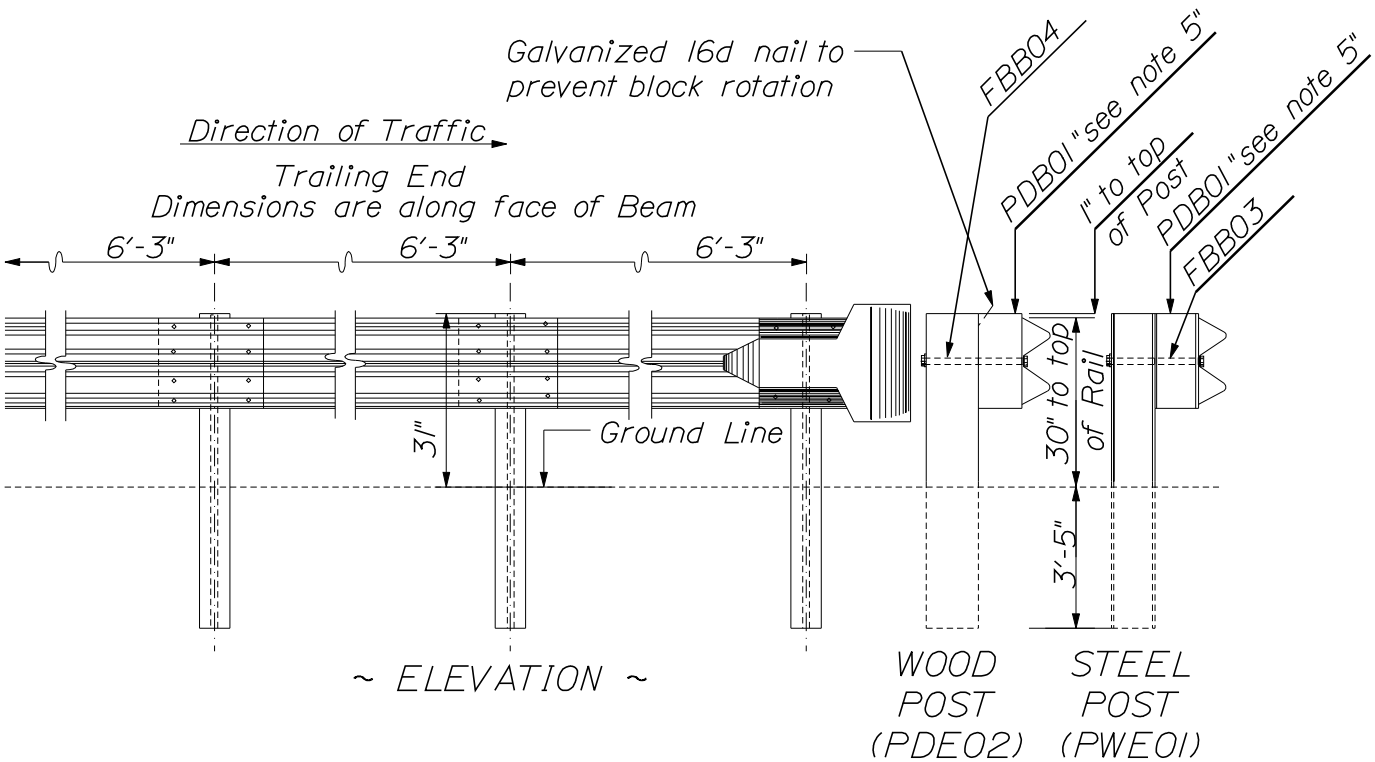

NOTES:

1. Intermediate post spacing shall be 6'-3" unless otherwise shown.
2. Wood posts for Guardrail shall be 6" nom. (5 1/2 " min.) x 8" nom. (7 1/2 " min.) and offset blocks shall be 6" x 8" nom. (5 1/2 " x 7 1/2 " min.).
3. Steel posts for Guardrail shall be W6x9.0.
4. Steel posts punched with holes in addition to those specified to accommodate other types of Guardrail, will be accepted subject to the approval of the Resident.
5. Composite offset blocks may be used as an alternative to wood offset blocks provided that they meet NCHRP 350 requirements and are installed according to manufacturers specifications.
6. Beam type Guardrail set on a radius of 150' or less shall be circular Guardrail.
7. Offset blocks shall be installed on all posts.
8. Guardrail Terminal End (RWE03A) to be used only on trailing end of Guardrail on divided highways. Washers (FWR03) shall be installed on the last 9 posts.
9. Identification letters and numbers on drawings refer to the standard detail drawings shown in "A guide to Standardized Highway Barrier Hardware" by AASHTO-AGC-ARTBA Joint Committee. chantemaza@hotmail.com
10. Where guardrail with 30 inch height to top of rail will be installed with a connection to bridge transition type "I", a 25 foot transition shall be provided to match the height of the bridge transition as directed by the resident.
Work shall be paid for under the appropriate

GUARDRAIL
606(03)

Revised on 05/10/12