| METRIC | 1. All dimensions are in millimeters unless otherwise noted. 2. All elevations and stations are in meters. | F.H.W.A. REG. NO. | STATE | PROJECT NUMBERS | SHEET NO. | TOTAL SHEETS |
|---|---|---|---|---|---|---|
| | | 1 | MAINE | BR-1006(700)X & STP-1006(800)X | 42 | 44 |

10067.00 & 10068.00

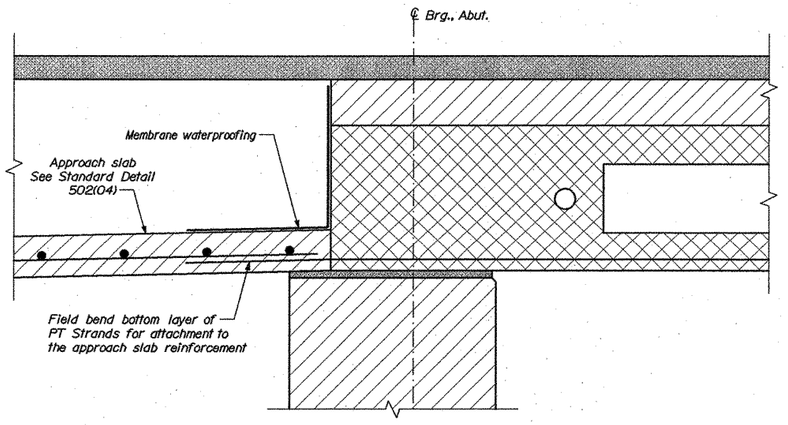


APPROACH SLAB DETAIL - GREAT SOUTH BRIDGE

Great North Bridge similiar

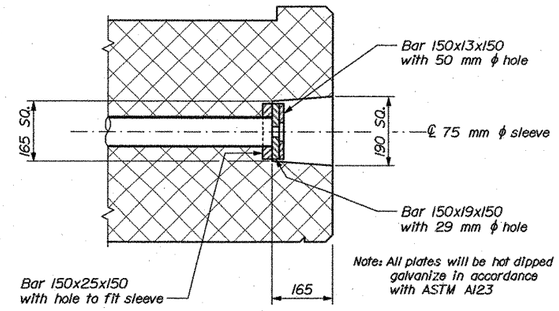


POST - TENSIONING BLOCK - OUT DETAIL

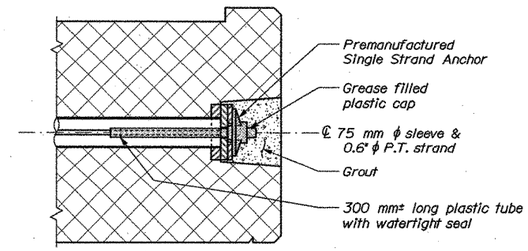


POST - TENSIONING ANCHORAGE DETAIL

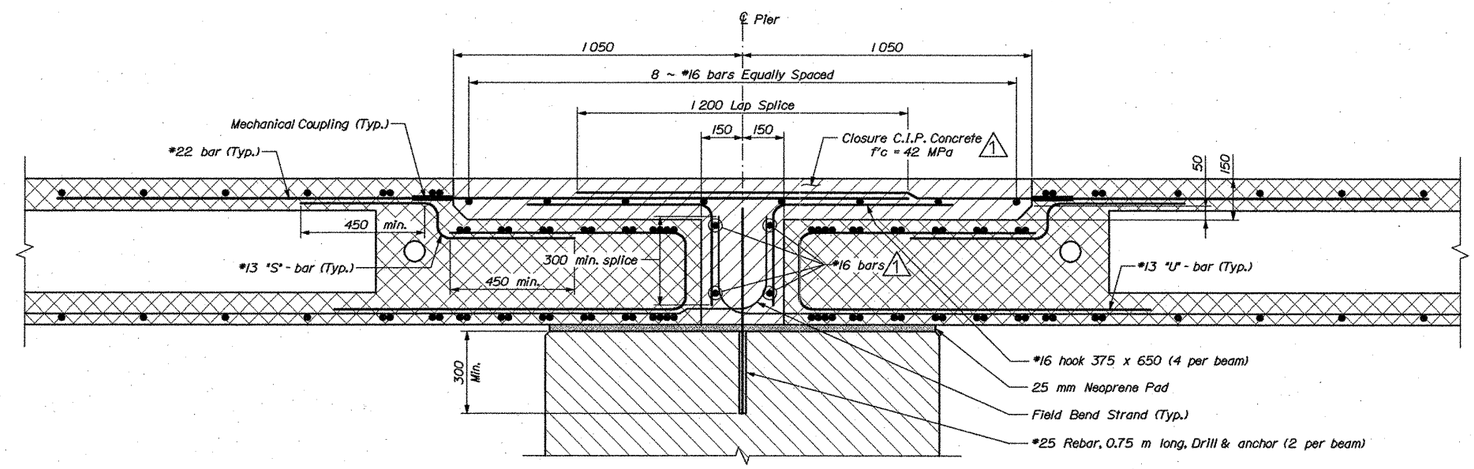


LONGITUDINAL SECTION OVER PIER - GREAT SOUTH BRIDGE

See voided slab details for precast reinforcing

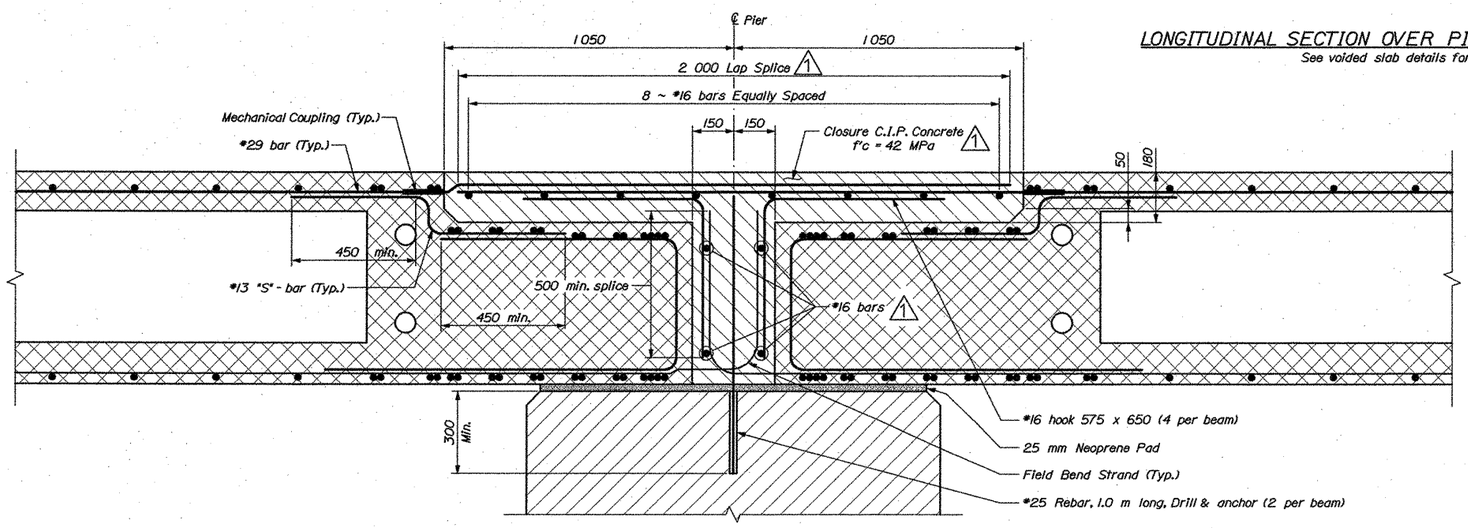


LONGITUDINAL SECTION OVER PIER - GREAT NORTH BRIDGE

See box beam details for precast reinforcing

1 Revised: September 12, 2007

BRIDGE NOS. 1475 & 3280

STATE OF MAINE
DEPARTMENT OF TRANSPORTATION

# GREAT SOUTH AND GREAT NORTH BRIDGE
OVER
# NARRAGAUGUS RIVER
IN THE TOWN OF
# MILBRIDGE
## SUPERSTRUCTURE DETAILS

SHEET OF

AUGUSTA, MAINE

| PROJECT DESIGN ENGINEER | BY | DATE |
|---|---|---|
| DESIGN-DETAILED | R. BULCER | D. SHAW | JUNE 2007 |
| CHECKED | | |
| REVISIONS | | |
| FIELD CHANGES | | |

PLANS

Filename: ...\042_Superstructure_Details.dgn Division: BRIDGE Username: david.shaw Date:9/13/2007