DO NOT SCALE, IF IN DOUBT ASK

GENERAL NOTES:

1. THE MATERIALS, WORKMANSHIP AND INSTALLATION TO MEET THE REQUIREMENTS OF CFR 46 SUBCHAPTER K AND IEEE 45, AND BE TO THE SATISFACTION OF THE USCG OCMI.

2. ALL DIMENSIONS ARE APPROXIMATE AND SHOULD BE VERIFIED IN THE FIELD PRIOR TO INSTALLATION.

3. CIRCUIT BREAKERS TO BE RATED FOR SWITCHING SERVICE.

4. CIRCUIT BREAKERS ARE TO BE RETAINED BY SCREWS.

5. CABLE PENETRATIONS THROUGH WATERTIGHT AND/OR FIRE RATED BULKHEADS WILL BE IN AN APPROVED MANNER TO RETAIN THE WATERTIGHT AND FIRE INTEGRITY OF THE VESSEL.

6. THE MINIMUM WIRE GAGE FOR POWER CABLES WILL BE 12 AWG AND 14 AWG FOR CONTROL AND LIGHTING CIRCUITS.

7. PANEL LOAD WILL BE BALANCED WITHIN 18% BETWEEN PHASES AS PER IEEE 45.

8. CABLES WILL BE RUN SINGLE BANKED IN TRAYS AND SUPPORTED EVERY 24" WITH METAL CABLE CLAMPS.

9. ALL ELECTRICAL EQUIPMENT LOCATED WITHIN THE MACHINERY SPACE WILL BE OF DRIP PROOF CONSTRUCTION.

10. FLUORESCENT LIGHTS WILL BE UL 1570 LISTED.

11. INSULATION RESISTANCE OF FEEDERS AND BRANCH CIRCUITS WILL BE TESTED IN ACCORDANCE WITH IEEE 45.

12. ALL ELECTRICAL EQUIPMENT ENCLOSURES WILL BE SUITABLY BONDED TO THE VESSEL'S HULL.

13. LIGHTS TO BE LOCATED AT THE TOP AND BOTTOM OF THE ELEVATOR SHAFT.

14. SWITCHES FOR VOID LIGHTS ARE TO BE LOCATED IN CLOSE PROXIMITY TO THE VOID ACCESS HATCHES.

15. ALL ELECTRICAL FIXTURES (SWITCHES, LIGHTS, RECEPTACLES, ETC.) LOCATED OUTSIDE OF THE SUPERSTRUCTURE AND BELOW THE MAIN DECK ARE TO BE EXTERIOR GRADE.

16. BOM QUANTITIES ARE FOR INFORMATION ONLY AND MUST BE VERIFIED BY CONTRACTOR.

17. ALL 120VAC PENDANT LIGHTS TO BE COMPACT FLUORESCENT BULBS.

BILL OF MATERIALS

ITEM	PART CODE	MANUFACTURER	DESCRIPTION	MATERIAL	QTY	MOD.
1	M100R	L.C. DOANE	OVHD, RECESSED MT. 3X20W FLUOR. LT., 2 CIRC., 120 VAC	–	35	–
2	M100R	L.C. DOANE	OVHD. REC, MT. 3X20W FLuOR. LT, 2X20 120 VAC, 1X20 24 VDC	–	18	–
3	M3	L.C. DOANE	OVHD EXT. SURF. MT. 2X20W FLUOR. LT., 120 VAC	–	26	–
4	M3	L.C. DOANE	OVHD. EXT. SURF. MT 3X20W FLuOR. LT. 2X20 120 VAC, 1X20 24 VDC	–	16	–
5	717B	PAULUHN	OVHD SURF MT. PENDANT LT.	–	11	–
6	729B	PAULUHN	BULKHEAD MT. PENDANT LIGHT	–	7	–
7	2722A	PAULUHN	2–WAY INTERIOR LIGHT SWITCH W/BOX	–	14	–
8	2724A	PAULUHN	3–WAY INTERIOR LIGHT SWITCH W/BOX	–	8	–
9	CCF EURO	TAYLORBRITE	SURFACE MOUNT 24 VDC, 7 W READING LIGHT W/SWITCH	–	22	–
10	2705B–125	PAULUHN	INTERIOR DUPLEX RECEPTACLE 120 VAC/20A W/BOX	–	26	–
11	2405A–125	PAULUHN	EXTERIOR DUPLEX RECEPTACLE, 120V, 20A W/BOX	–	14	–
12	B62A	PAULUHN	EXTERIOR 2–WAY LIGHT SWITCH W/BOX, 120 VAC, 20A	–	5	–
13	QA1603	PAULUHN	HALOGEN FLOODLIGHT, 300W, 120 VAC	–	10	–
14	MT421C	L.C. DOANE	PATH/STEP LIGHT, 8W FLUORESCENT	–	25	–
15	1192AS	PAULUHN	RECESSED OVHD LIGHT, 24 VDC	–	2	–

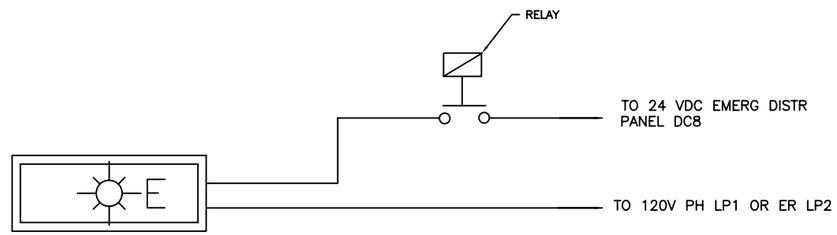

DETAIL 6-D

TYP FOR ALL EMERG LTS (ITEMS 2 AND 4), TO BE POWERED ON AT ALL TIMES

SYMBOL LEGEND

SYMBOL	DESCRIPTION	ITEM NO.
	LIGHT SWITCH, 2–WAY	7 OR 12
3–WAY	LIGHT SWITCH, 3–WAY	8
	120 V, 20A DUPLEX RECEPTACLE	10 or 11
	OVHD INT. RECESSED MOUNT 3X20 FLOR. LT.	1
	OVHD INT. RECESSED MT. FLOR. LT. 2X20 120 VAC AND 1X20 24 VDC	2
	OVHD EXT. SURF. MT. FLOR. LT. 2X20 120 VAC AND 1X20 24 VDC OR 2X20W, 24 VDC	4
	OVERHD EXTERIOR SURF. MTG 2X20 FLOR. 120 VAC	3
	OVERHEAD SURFACE MOUNT PENDANT COMPACT FLOURESCENT	5
	BULKHEAD EMERG. SURF. MT PENDANT LT. W/24 VDC, 25W BULB	6
	200W HALOGEN FLOODLIGHT	13
	PATH/STEP LIGHT	14
	RECESSED 24 VDC INCANDESCENT FIXTURE	15
	SURFACE MOUNT 24 VAC, 7 W READING LIGHT FIXTURE	9
	JUNCTION BOX, QTY AS REQUIRED	N/A

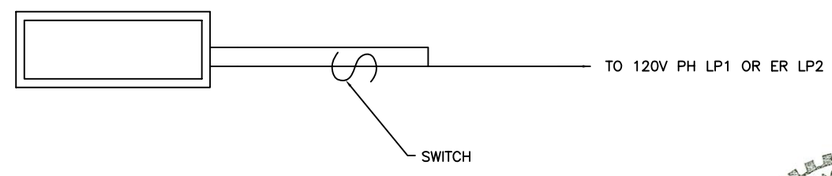

DETAIL 5-B

TYP FOR ALL INSIDE CABIN LTS (ITEM 1), MAIN AND 2ND DK (ITEMS 2 AND 4), SWITCHED

JOHN ALEXANDER HUNTER
STATE OF WASHINGTON
33971
REGISTERED PROFESSIONAL ENGINEER
5-10-10
EXPIRES 5-7-12

APPROVALS:	SUBMIT DATE	APPRVD BY	APPRVD DATE	RE–SUBMIT DATE	APPRVD BY	APPRVD DATE
OWNER	–	–	–	–	–	–
USCG	–	–	–	–	–	–
ABS	–	–	–	–	–	–
USPHS	–	–	–	–	–	–

REV.	DATE	REVISION	PAGE	ZONE	AUTH®	NO.	REFERENCES
–	–	–				7	–
–	–	–				6	–
–	–	–				5	–
–	–	–				4	–
–	–	–				3	–
B	–	–				2	–
A	–	–				1	–

CHECKED JAH 5–10–10 | AUTH® JEK 5–10–10 | SCALE NTS
DRAWN JM | ORIG® DATE 5–10–10 | DIMS IN INCHES UNLESS OTHERWISE STATED

Seaworthy Systems, Inc.
P.O. BOX 965
ESSEX, CT 06426
USA
TEL: (860) 767–9061
FAX: (860) 767–1263

CASCO BAY LINES
PO BOX 4656
PORTLAND, ME 04112

TITLE 399 PASSENGER FERRY
120 VAC AND 24 VDC
LIGHTING SCHEMATIC

DRG No. 283–32A–305 | REV. – | SHEET 1 OF 10

SSI FILE No. s:\active\projnumb\283–32\drafting\active\283–32A–305.dwg

DO NOT SCALE, IF IN DOUBT ASK

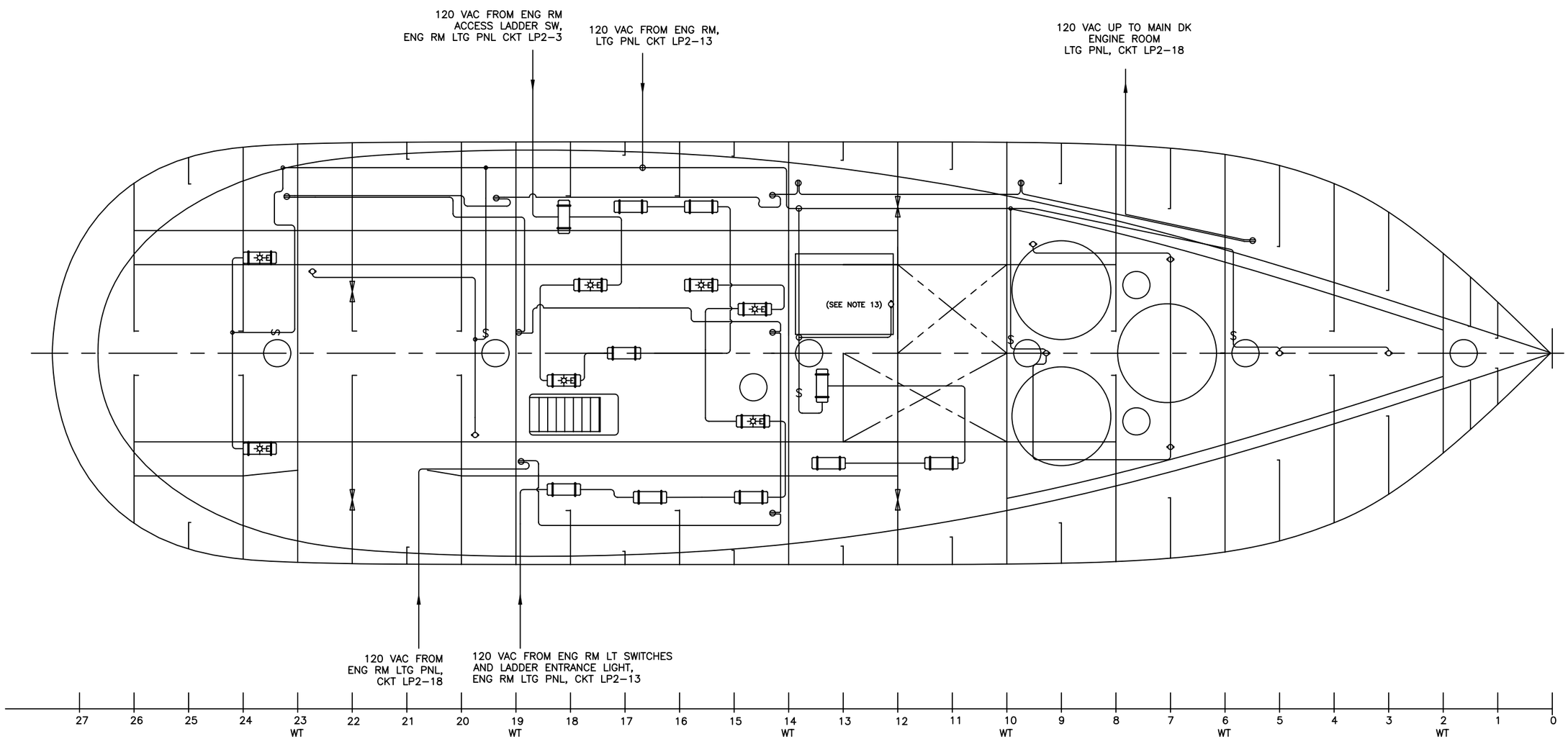

120 VAC LIGHTING PLAN

BELOW MAIN DECK

SCALE AS STATED DIMS IN INCHES UNLESS OTHERWISE STATED	Seaworthy Systems, Inc. P.O. BOX 965 ESSEX, CT 06426 USA TEL: (860) 767-9061 FAX: (860) 767-1263	CASCO BAY LINES PO BOX 4656 PORTLAND, ME 04112	TITLE 399 PASSENGER FERRY 120 VAC AND 24 VDC LIGHTING SCHEMATIC
			DRG No. 283-32A-305 REV. – SHEET 2 OF 10
			SSI FILE No. e:\active\projnumb\283-32\drafting\active\283-32A-305.dwg

DO NOT SCALE, IF IN DOUBT ASK

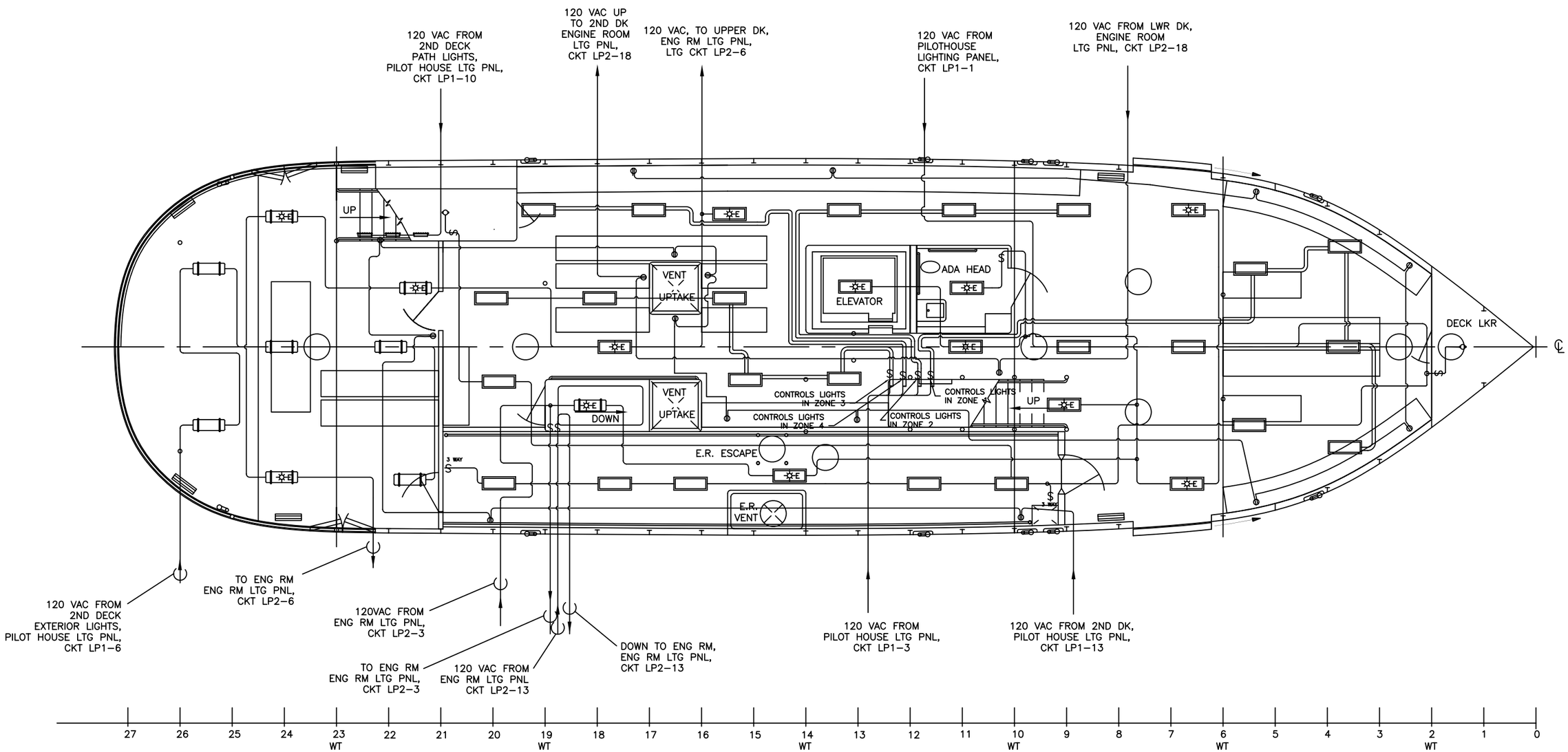

120 VAC LIGHTING PLAN

ABOVE MAIN DECK

SCALE AS STATED DIMS IN INCHES UNLESS OTHERWISE STATED	Seaworthy Systems, Inc. P.O. BOX 965 ESSEX, CT 06426 USA TEL: (860) 767–9061 FAX: (860) 767–1263	CASCO BAY LINES PO BOX 4656 PORTLAND, ME 04112	TITLE 399 PASSENGER FERRY 120 VAC AND 24 VDC LIGHTING SCHEMATIC
			DRG No 283–32A–305 REV. – SHEET 3 OF 10
			SSI FILE No. s:\active\projnumb\283–32\drafting\active\283–32A–305.dwg

DO NOT SCALE, IF IN DOUBT ASK

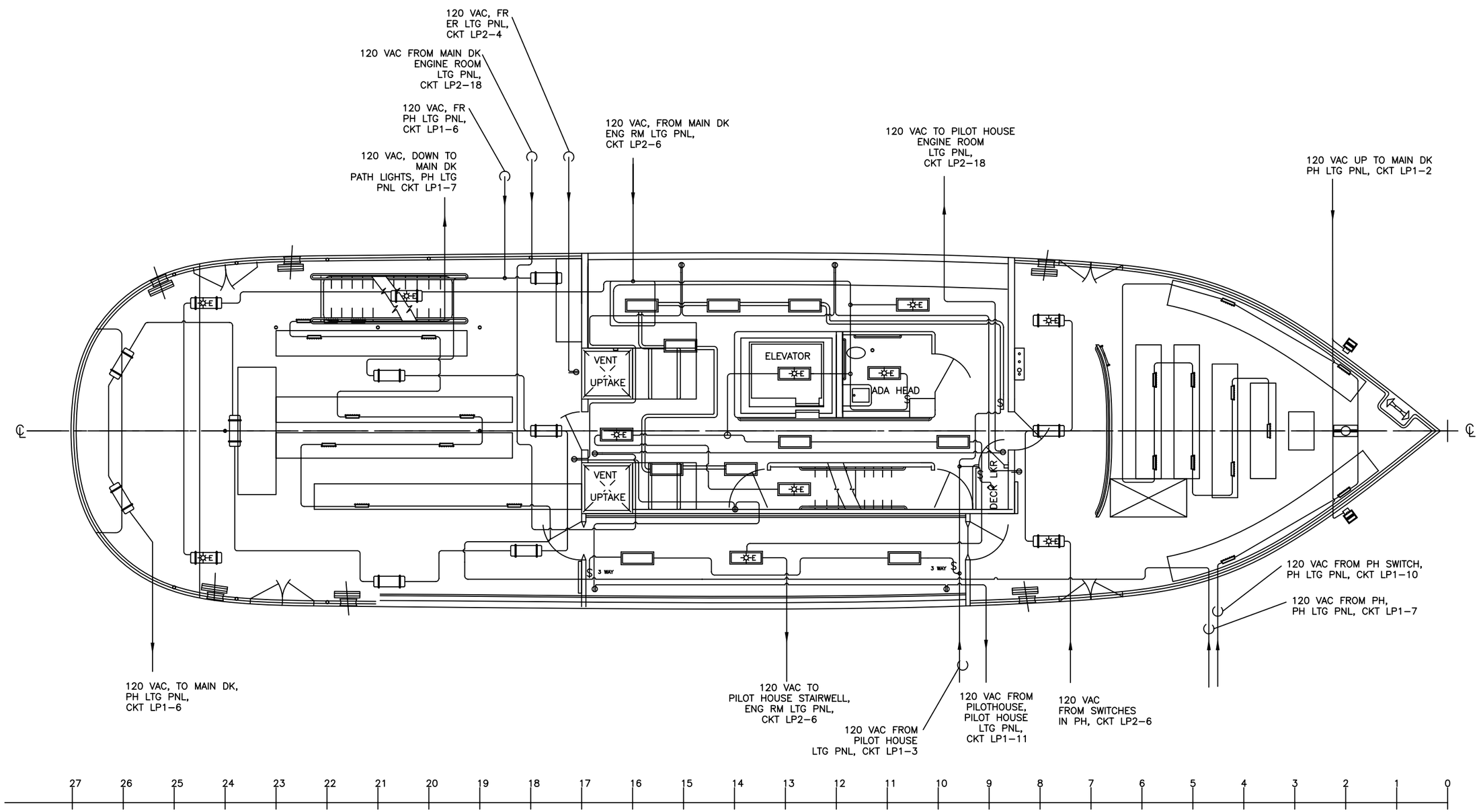

120 VAC LIGHTING PLAN

ABOVE UPPER DECK

SCALE AS STATED DIMS IN INCHES UNLESS OTHERWISE STATED	Seaworthy Systems, Inc. P.O. BOX 965 ESSEX, CT 06426 USA TEL: (860) 767–9061 FAX: (860) 767–1263	CASCO BAY LINES PO BOX 4656 PORTLAND, ME 04112	TITLE 399 PASSENGER FERRY 120 VAC AND 24 VDC LIGHTING SCHEMATIC DRG No. 283–32A–305 REV. – SHEET 4 OF 10 SSI FILE No. e:\active\projnumb\283–32\drafting\active\283–32A–305.dwg

DO NOT SCALE, IF IN DOUBT ASK

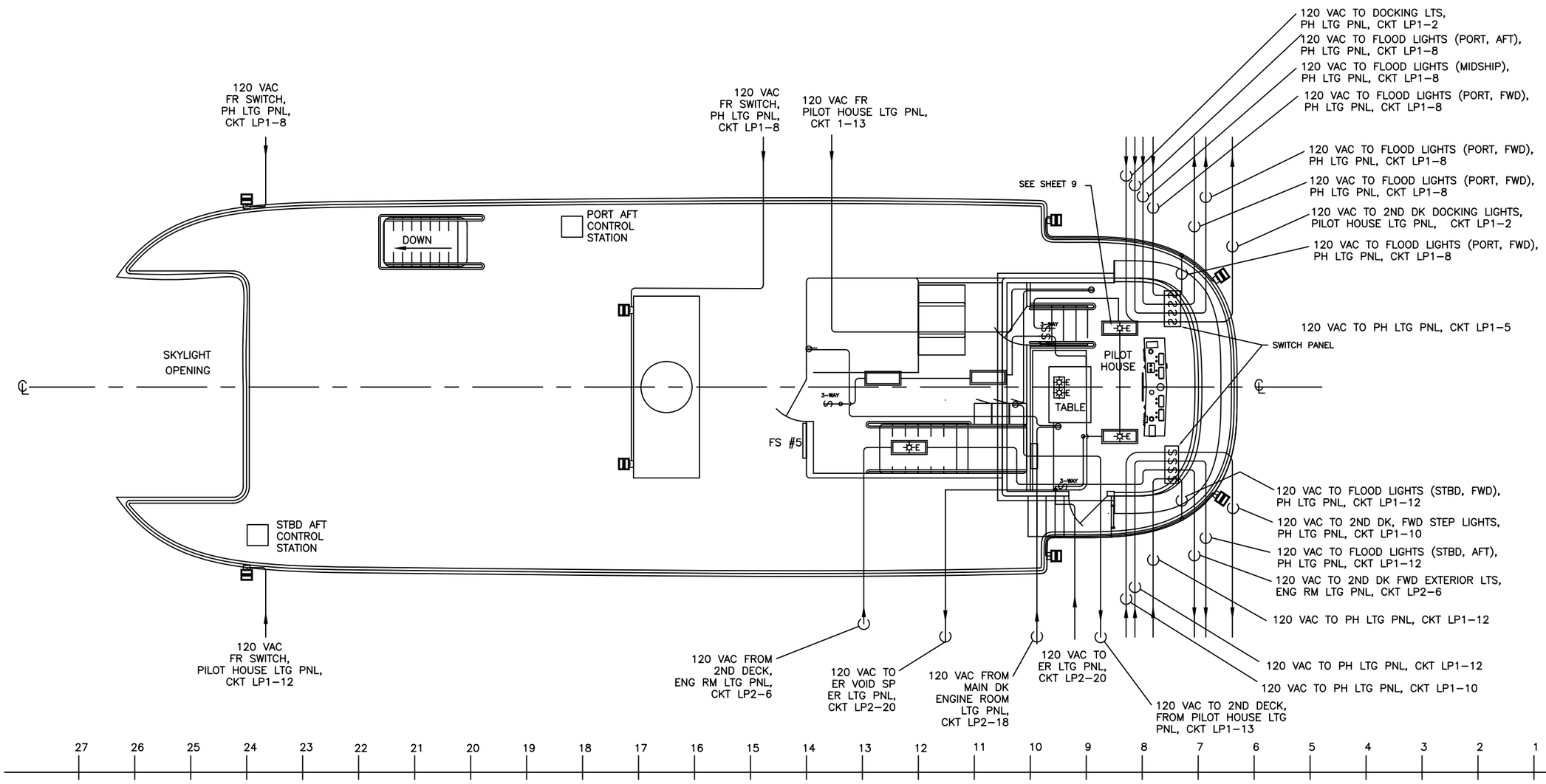

120 VAC LIGHTING PLAN
ABOVE PILOTHOUSE DECK

SCALE AS STATED DIMS IN INCHES UNLESS OTHERWISE STATED	Seaworthy Systems, Inc. P.O. BOX 965 ESSEX, CT 06426 USA TEL: (860) 767-9061 FAX: (860) 767-1263	CASCO BAY LINES PO BOX 4656 PORTLAND, ME 04112	TITLE 399 PASSENGER FERRY 120 VAC AND 24 VDC LIGHTING SCHEMATIC DRG No. 283–32A–305 REV. — SHEET 5 OF 10 SSI FILE No. w:\active\projnumb\283-32\drafting\active\283-32A-305.dwg

DO NOT SCALE, IF IN DOUBT ASK

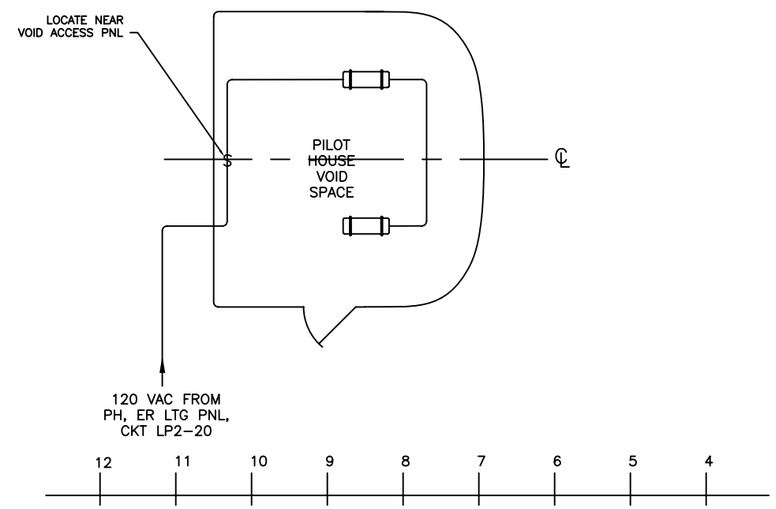

120 VAC LIGHTING PLAN
ABOVE PILOTHOUSE VOID SPACE

SCALE AS STATED DIMS IN INCHES UNLESS OTHERWISE STATED	Seaworthy Systems, Inc. P.O. BOX 965 ESSEX, CT 06426 USA TEL: (860) 767-9061 FAX: (860) 767-1263	CASCO BAY LINES PO BOX 4656 PORTLAND, ME 04112	TITLE 399 PASSENGER FERRY 120 VAC AND 24 VDC LIGHTING SCHEMATIC DRG No. 283-32A-305 REV. — SHEET 6 OF 10 SSI FILE No. s:\active\projnumb\283-32\drafting\active\283-32A-305.dwg

DO NOT SCALE, IF IN DOUBT ASK

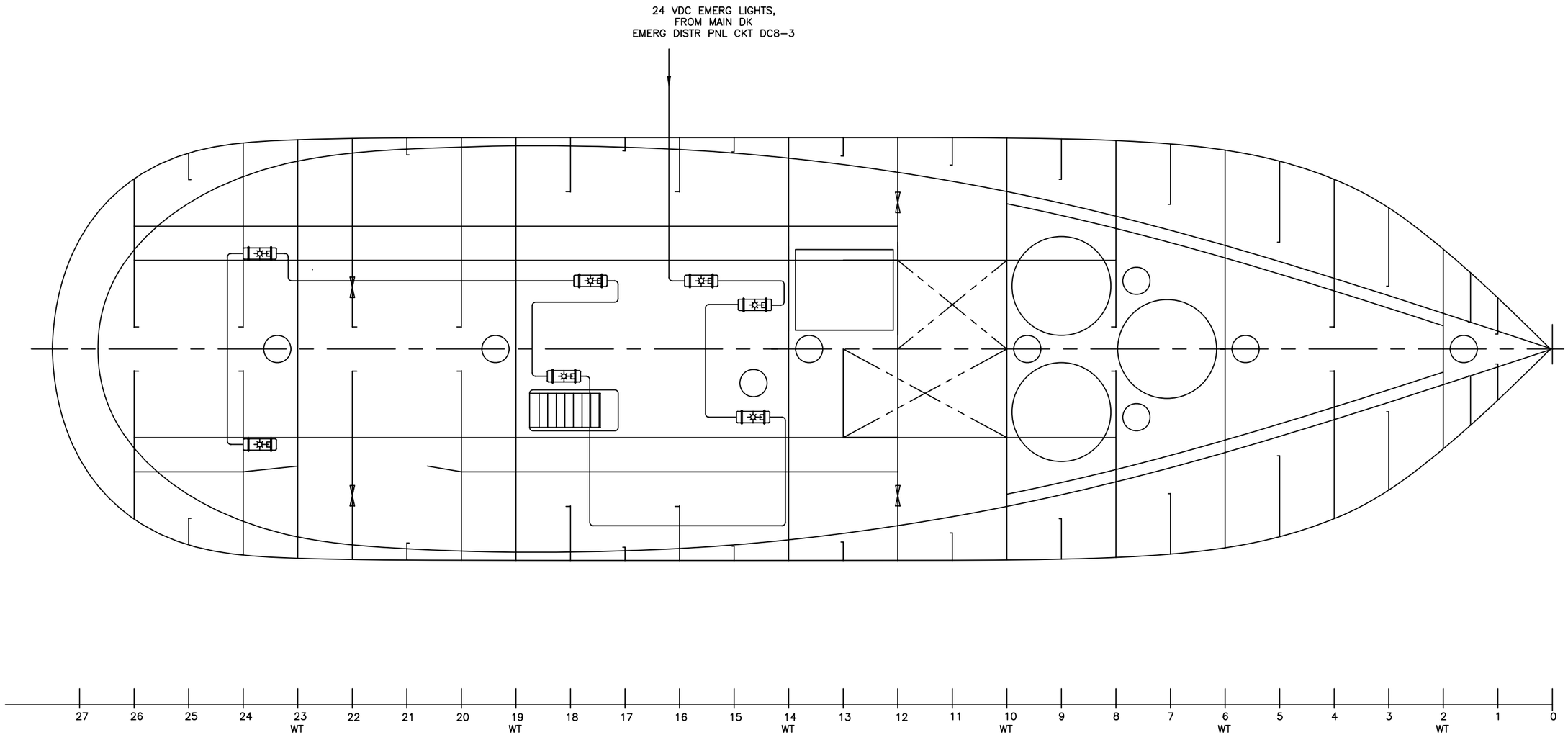

24 VDC EMERGENCY LIGHTING PLAN

BELOW MAIN DECK

SCALE AS STATED DIMS IN INCHES UNLESS OTHERWISE STATED	Seaworthy Systems, Inc. P.O. BOX 965 ESSEX, CT 06426 USA TEL: (860) 767–9061 FAX: (860) 767–1263	CASCO BAY LINES PO BOX 4656 PORTLAND, ME 04112	TITLE 399 PASSENGER FERRY 120 VAC AND 24 VDC LIGHTING SCHEMATIC DRG No. 283–32A–305 REV. – SHEET 7 OF 10 SSI FILE No. e:\active\projnumb\283–32\drafting\active\283–32A–305.dwg

DO NOT SCALE, IF IN DOUBT ASK

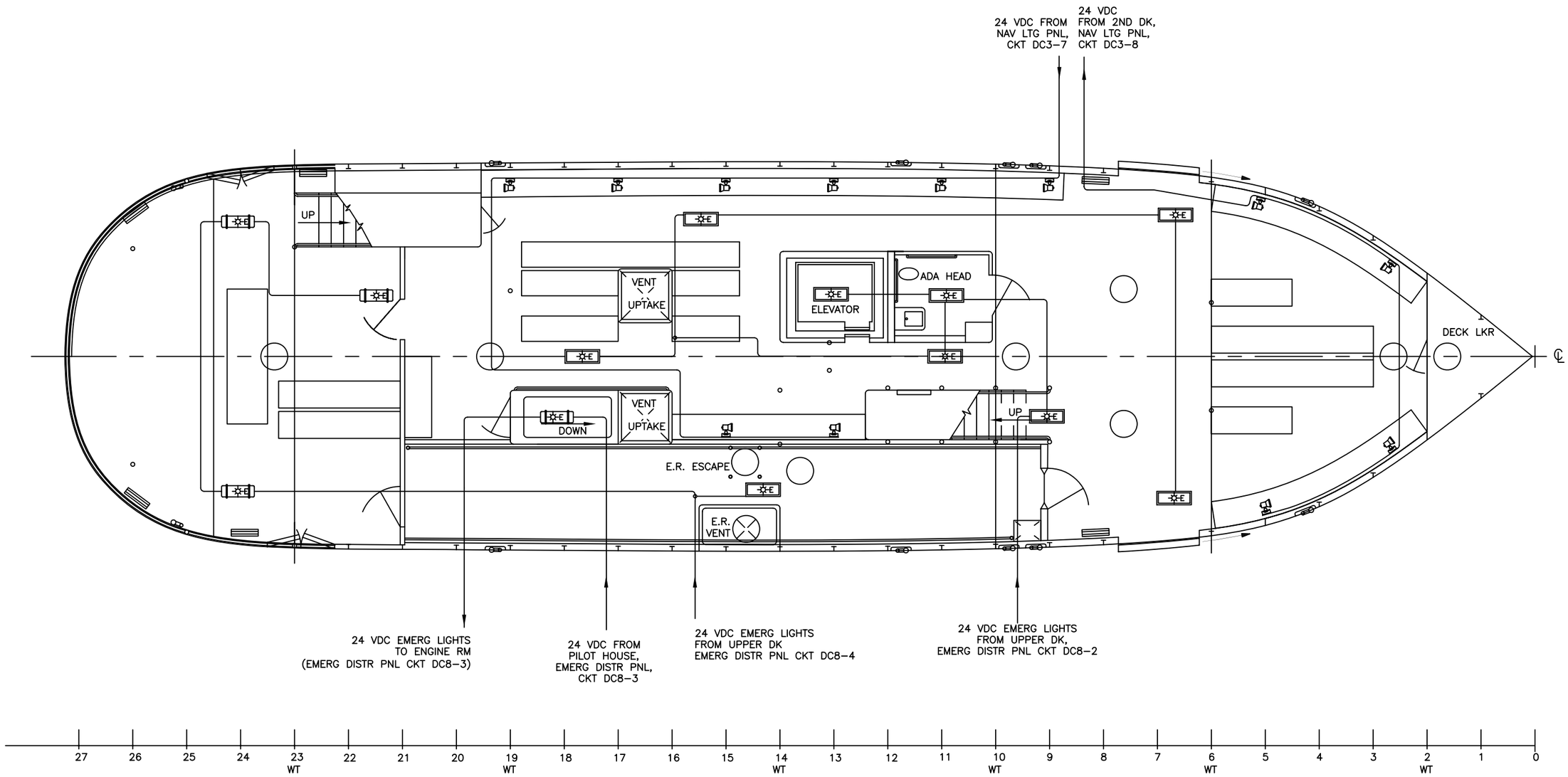

24 VDC EMERGENCY LIGHTING PLAN

ABOVE MAIN DECK

SCALE AS STATED DIMS IN INCHES UNLESS OTHERWISE STATED	Seaworthy Systems, Inc. P.O. BOX 965 ESSEX, CT 06426 USA TEL: (860) 767-9061 FAX: (860) 767-1263	CASCO BAY LINES PO BOX 4656 PORTLAND, ME 04112	TITLE 399 PASSENGER FERRY 120 VAC AND 24 VDC LIGHTING SCHEMATIC DRG No. 283-32A-305 REV. – SHEET 8 OF 10 SSI FILE No. s:\active\projnumb\283-32\drafting\active\283-32A-305.dwg

DO NOT SCALE, IF IN DOUBT ASK

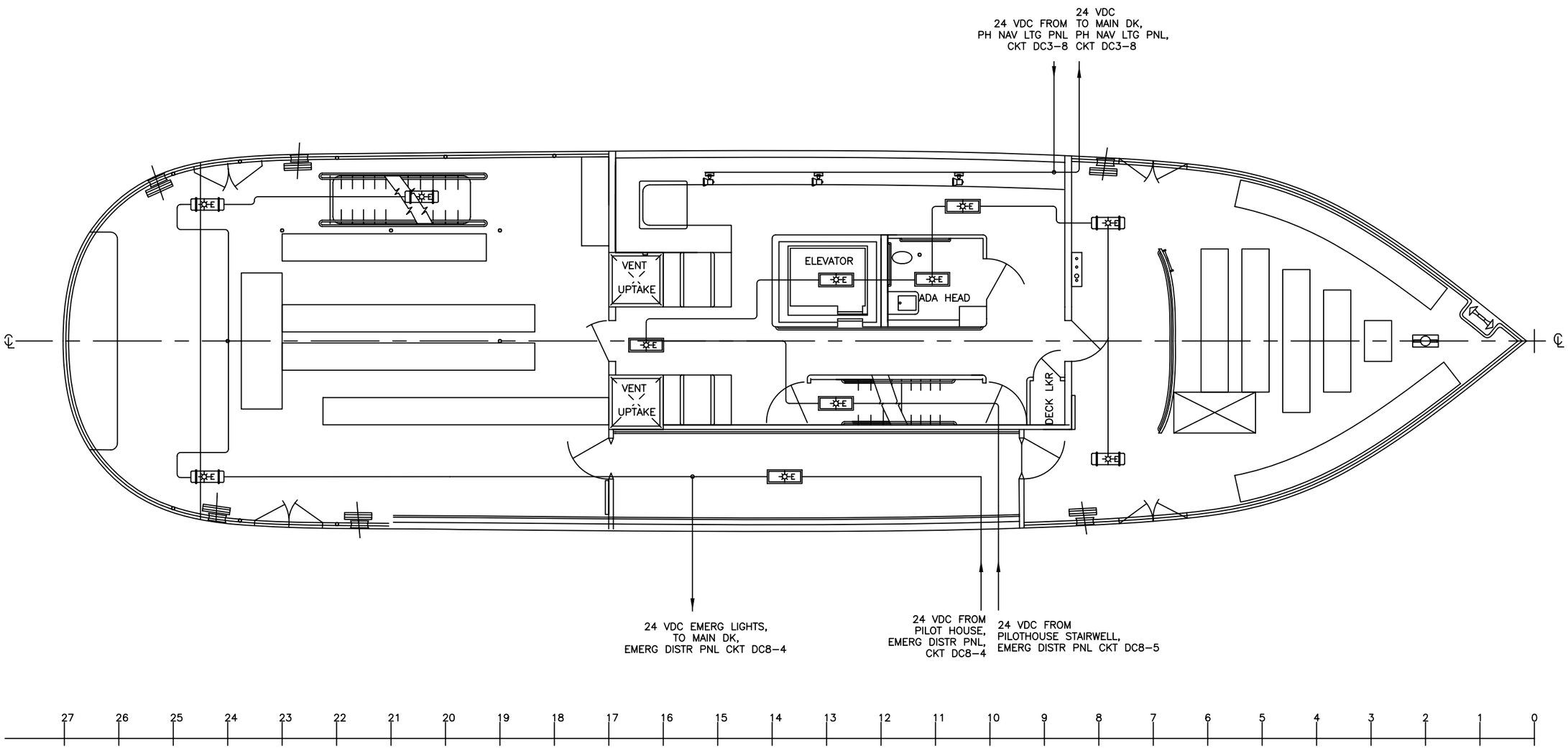

24 VDC EMERGENCY LIGHTING PLAN

ABOVE UPPER DECK

SCALE AS STATED DIMS IN INCHES UNLESS OTHERWISE STATED	Seaworthy Systems, Inc. P.O. BOX 965 ESSEX, CT 06426 USA TEL: (860) 767-9061 FAX: (860) 767-1263	CASCO BAY LINES PO BOX 4656 PORTLAND, ME 04112	TITLE 399 PASSENGER FERRY 120 VAC AND 24 VDC LIGHTING SCHEMATIC DRG No. 283-32A-305 REV. — SHEET 9 OF 10 SSI FILE No. s:\active\projnumb\283-32\drafting\active\283-32A-305.dwg

DO NOT SCALE, IF IN DOUBT ASK

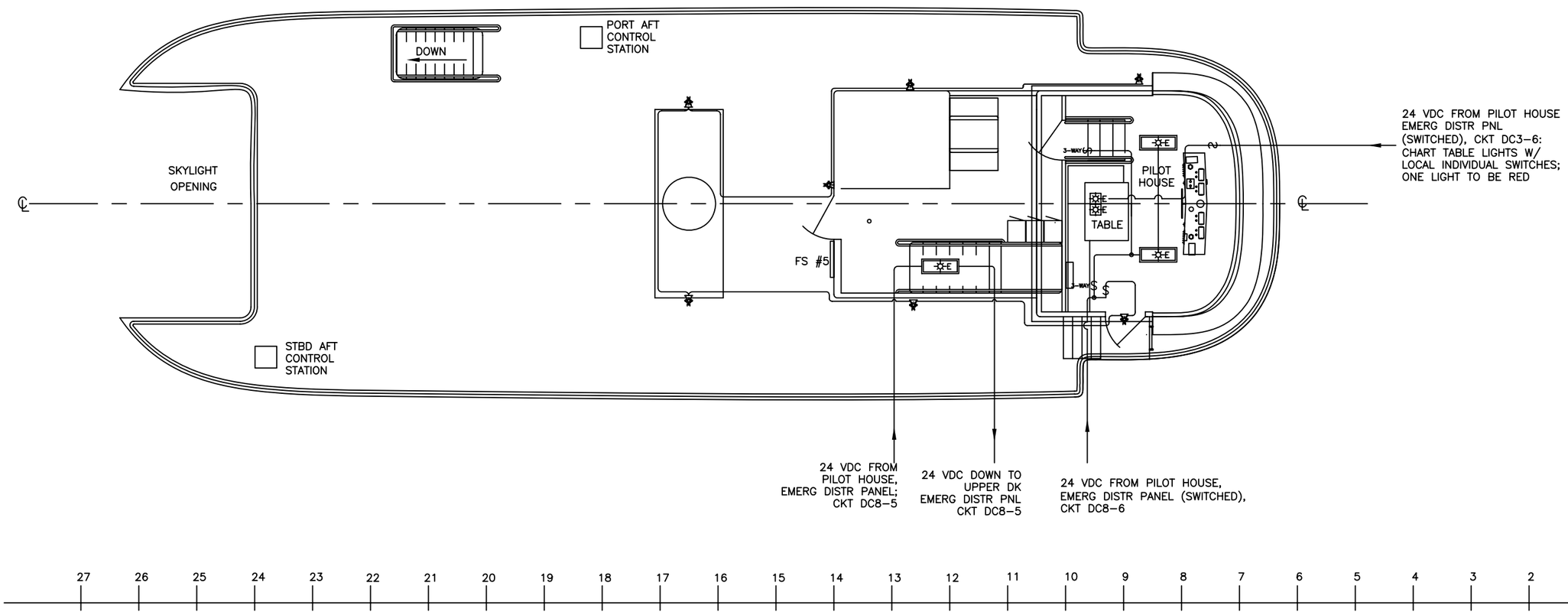

24 VDC EMERGENCY LIGHTING PLAN

ABOVE PILOTHOUSE DECK

SCALE AS STATED DIMS IN INCHES UNLESS OTHERWISE STATED	Seaworthy Systems, Inc. P.O. BOX 965 ESSEX, CT 06426 USA TEL: (860) 767-9061 FAX: (860) 767-1263	CASCO BAY LINES PO BOX 4656 PORTLAND, ME 04112	TITLE 399 PASSENGER FERRY 120 VAC AND 24 VDC LIGHTING SCHEMATIC DRG No. 283–32A–305 REV. — SHEET 10 OF 10 SSI FILE No. m:\active\projnumb\283–32\drafting\active\283–32A–305.dwg