MATERIAL SCHEDULE

SERVICE	DESIGN TEMP & PRESSURE	SIZE	PIPE	TAKEDOWN JOINTS				FITTINGS	VALVES	
				MATERIAL	GASKETS	NUTS	BOLTS		BODY	TRIM
FUEL OIL	BELOW 150° F & 150 PSI (CLASS 2) OPERATING PRESSURE: 150 PSIG & BELOW	2 1/2"	SMLS. OR E.R.W. CARBON STL., ASTM A106 GR B OR A53 GR B TY S OR E	FLGD: SW, WELDNECK OR SLIP ON, CARBON STL. ASTM A105	–	CARBON STL., ASTM A307 GR B	CARBON STL., ASTM A563 GR A	BUTTWELD: CARBON STL., ASTM A234 GR WPB	FLGD., D.I. ASTM A395 OR CARBON STL. ASTM A216 GR WCB OR A105	BRONZE
		2" & BELOW		UNIONS, SW OR SCRD., CARBON STEEL ASTM A105				SW OR SCRD: CARBON STL., ASTM A234 GR WPB OR A105	SW OR SCRD: CARBON STL., ASTM A234 GR WPB OR A105	BRONZE
TLI AIR SYSTEM	–	ALL	STAINLESS STL., TUBING	FLARED OR COMPRESSION, STAINLESS STL.	–	–	–	FLARED OR COMPRESSION, STAINLESS STL.	FLARED OR COMPRESSION, STAINLESS STL.	STAINLESS STEEL

GENERAL NOTES:

1. ALL MATERIALS, WORKMANSHIP AND INSTALLATION TO MEET THE REQUIREMENTS OF CFR 46 SUBCHAPTER K (119.435–119.470) & BE TO THE SATISFACTION OF THE USCG OCMI.

2. ALL LOCATIONS ARE APPROXIMATE AND SHOULD BE FINALIZED IN THE FIELD PRIOR TO INSTALLATION.

3. ALL PIPING TO BE CLASS II CONVEYING DIESEL OIL AT 150 PSIG & BELOW, AND AT 150° F & BELOW.

4. ASTM A–72 PIPE IS NOT TO BE USED.

5. VALVES TO BE CLOCKWISE (TO CLOSE) AND RISING STEM TYPE.

6. TUBING CONNECTIONS AND FITTINGS MUST BE OF NONFERROUS DRAWN OR FORGED METAL OF THE FLARED TYPE EXCEPT THAT FLARELESS FITTINGS OF THE NONBITE TYPE MAY BE USED WHEN THE TUBING SYSTEM IS OF NICKEL–COPPER OR COPPER–NICKEL. WHEN MAKING TUBE CONNECTIONS, THE TUBING MUST BE CUT SQUARE AND FLARED BY SUITABLE TOOLS. TUBE ENDS MUST BE ANNEALED BEFORE FLARING.

7. FUEL LINES MUST BE ACCESSIBLE, PROTECTED FROM MECHANICAL INJURY, AND EFFECTIVELY SECURED AGAINST EXCESSIVE MOVEMENT AND VIBRATION. WHERE PASSING THROUGH BULKHEADS, FUEL LINES MUST BE PROTECTED BY CLOSE FITTING FERRULES OR STUFFING BOXES. ALL FUEL LINES AND FITTINGS MUST BE ACCESSIBLE FOR INSPECTION.

8. FLANGED SHUTOFF VALVES, INSTALLED SO AS TO CLOSE AGAINST THE FUEL FLOW, MUST BE FITTED IN THE FUEL SUPPLY LINES, ONE AT THE TANK CONNECTION AND ONE AT THE ENGINE END OF THE FUEL LINE TO STOP FUEL FLOW WHEN SERVICING ACCESSORIES. THE SHUTOFF VALVE AT THE TANK MUST BE MANUALLY OPERABLE FROM THE OUTSIDE THE COMPARTMENT IN WHICH THE VALVE IS LOCATED.

9. A SHORT LENGTH OF FLEXIBLE HOSE MUST BE INSTALLED IN THE FUEL LINE AT OR NEAR THE ENGINES. THE FLEXIBLE HOSE MUST MEET THE REQUIREMENTS OF §56.60–25 IN SUBCHAPTER F OF THIS CHAPTER.

10. A SUITABLE METAL MARINE TYPE STRAINER (WITH STEEL BOWL), MEETING THE REQUIREMENTS OF THE USCG, MUST BE FITTED IN THE FUEL SUPPLY LINE FOR EACH MAIN ENGINE, GENSET AND HEATING BOILER.

11. ALL ACCESSORIES INSTALLED IN THE FUEL LINE MUST BE INDEPENDENTLY SUPPORTED.

12. VALVE HAND WHEELS TO BE FITTED WITH LABEL PLATES INDICATING LINE FUNCTION.

13. TANK LEVEL INDICATING SYSTEM TO BE INSTALLED IN ACCORDANCE WITH MANUFACTURER'S INSTRUCTION. HIGH AND LOW LEVEL ALARMS TO BE CONNECTED TO ALARM PANELS IN PILOTHOUSE.

14. GALVANIZED PIPE SHALL NOT BE USED ANYWHERE IN DIESEL OIL SYSTEM.

15. QUICK CLOSING VALVE SHALL BE OPERATED BY D–RING CABLE PULL MOUNTED IN GLASS ENCLOSURE LOCATED ON MAIN DECK.

16. BOM QUANTITIES TO BE VERIFIED BY CONTRACTOR.

ABBREVIATIONS

C.S.	CAST STEEL
D.I.	DUCTILE IRON
E.R.W.	ELECTRIC RESISTANCE WELDED
FGD.	FORGED
FLGD.	FLANGED
F.S.	FORGED STEEL
N.C.	NORMALLY CLOSED
SCH.	SCHEDULE
SCRD.	SCREWED
SMLS.	SEAMLESS
S.S.	STAINLESS STEEL
S.W.	SOCKET WELD

SYMBOLS LIST

SYMBOL	DESCRIPTION	SYMBOL	DESCRIPTION
	PIPING		BUTTERFLY VALVE, WAFER TYPE
	GATE VALVE		ANGLE VALVE, STOP CHECK
	GLOBE VALVE		VENT
	BALL VALVE		SUCTION STRAINER
	HORIZ SWING CHECK VALVE		FILTER
	GLOBE STOP CHECK VALVE		FLEXIBLE CONNECTION
	COENCENTRIC REDUCER	A	ALARM
	Y STRAINER		GATE VALVE, WITH REMOTER OPERATOR
	FLANGED JOINT	S	SIMPLEX STRAINER
	BUTTERFLY VALVE, MANUALLY OPERATED	D S	DUPLEX STRAINER
	REACH ROD		LEVEL GAGE
	REDUCER	TLI	TANK LEVEL IND.
(N. C.)	NORMALLY CLOSED		VENT FLOAT & TRAP
	TANK LEVEL ALARM		

BILL OF MATERIALS

ITEM	DESCRIPTION	QTY	MOD.
1	1–1/2" PLUG	2	–
2	FUEL FILTRATION UNITS, USCG APPROVED	4	–
3	1/2" FLEXIBLE HOSE, USCG APPROVED HOSE AND FITTINGS	6	–
4	3/4" FLEXIBLE HOSE, USCG APPROVED HOSE AND FITTINGS	2	–
5	1/2"–300 WOG STOP/CHECK VALVES	4	–
6	1/2"–300 WOG BALL VALVES	5	–
7	3/4"–300 WOG BALL VALVES	10	–
8	1–1/2" –300 WOG BALL VALVE	4	–
9	1–1/2" 300 WOG QUICK CLOSING VALVE W/PULL CABLE	2	–
10	1–1/2" SCREWED CHECK VALVE, 300 WOG	2	–
11	2" SCRD. VENT CHECK VALVE W/FLAME SCREEN, KINGS POINT MACH	2	–
12	TANK LEVEL INDICATOR, SURFACE MOUNT	4	–
13	TANK LEVEL IND., PANEL MT WITH H/L CONTACTS	2	–
14	90 DEG. DECK BOX W/INDICATOR, BFG MARINE	2	–
15	1–1/2"X3/4" PIPE REDUCERS	A/R	–
16	1–1/2"X1/2" PIPE REDUCERS	A/R	–
17	1–1/2" SCHEDULE 40 PIPE	A/R	–
18	1/2" SCHEDULE 40 PIPE OR .1/2"X049 WALL TUBING	A/R	–
19	VISUAL TANK LEVEL INDICATOR WITH ELECTRONIC TRANSMITTER	2	–
20	–	–	–
21	2" SCHEDULE 40 PIPE	–	–
22	3/4" PLUG	1	–

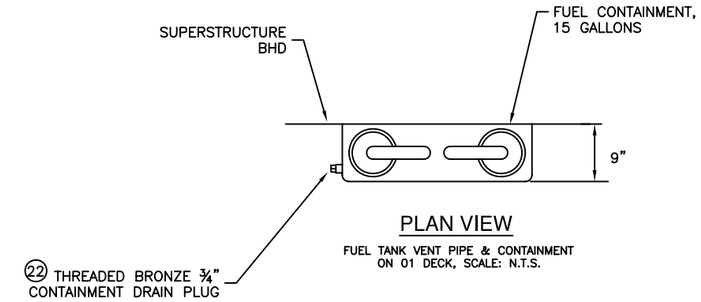

PLAN VIEW

FUEL TANK VENT PIPE & CONTAINMENT ON 01 DECK, SCALE: N.T.S.

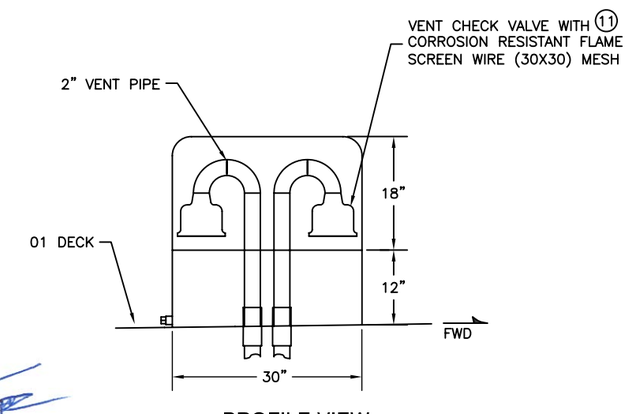

PROFILE VIEW

FUEL TANK VENT PIPE & CONTAINMENT SCALE: N.T.S.

JOHN ALEXANDER HUNT
STATE OF WASHINGTON
33971
REGISTERED PROFESSIONAL ENGINEER
EXPIRES 5-7-12
5-10-10

DO NOT SCALE, IF IN DOUBT ASK

APPROVALS:	SUBMIT DATE	APPRVD BY	APPRVD DATE	RE–SUBMIT DATE	APPRVD BY	APPRVD DATE
OWNER	–	–	–	–	–	–
USCG	–	–	–	–	–	–
ABS	–	–	–	–	–	–
USPHS	–	–	–	–	–	–

REV.	DATE	REVISION	PAGE	ZONE	AUTH.
–	–	–			
–	–	–			
–	–	–			
–	–	–			
–	–	–			
2	–	–			
1	–	–			

NO.	REFERENCES
7	–
6	–
5	–
4	–
3	–
2	–
1	283–32A–010, "GENERAL ARRANGEMENT"

CHECKED JAH 05–10–10 | AUTH. JEK 05–10–10 | SCALE AS STATED
DRAWN DSM | ORIG. DATE 05–10–10 | DIMS IN INCHES UNLESS OTHERWISE STATED

Seaworthy Systems, Inc.
P.O. BOX 965
ESSEX, CT 06426
USA
TEL: (860) 767–9061
FAX: (860) 767–1263

CASCO BAY LINES
PO BOX 4656
PORTLAND, ME 04112

TITLE 399 PASSENGER FERRY
FUEL OIL SYSTEM SCHEMATIC

DRG No. 283–32A–203 | REV. – | SHEET 1 OF 3

SSI FILE No. e:\active\projnumb\283–32\drafting\active\283–32A–203.dwg

DO NOT SCALE, IF IN DOUBT ASK

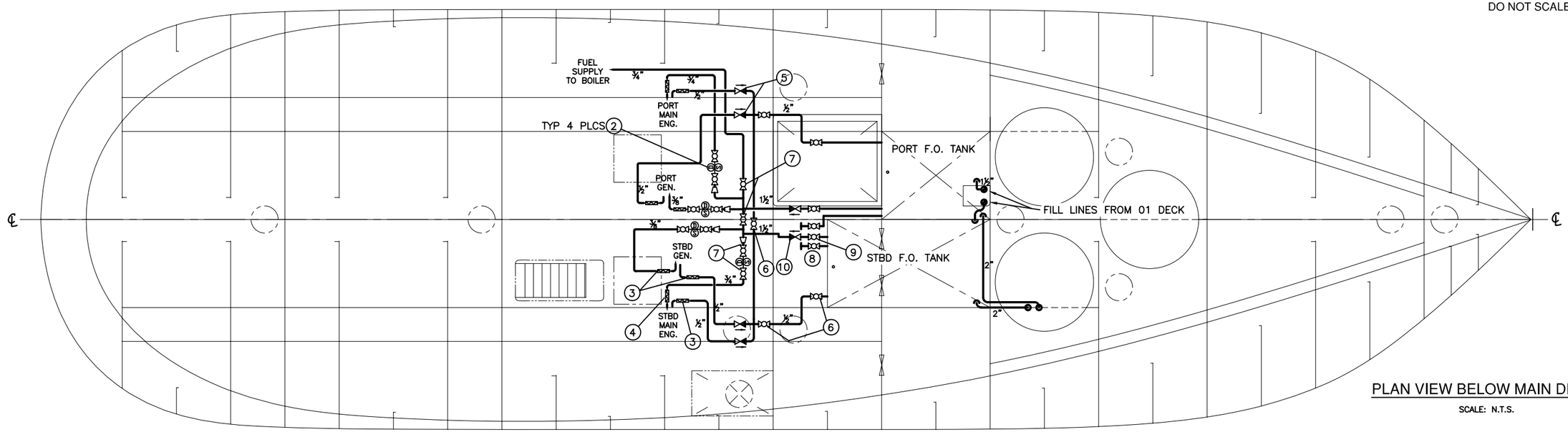

PLAN VIEW BELOW MAIN DECK

SCALE: N.T.S.

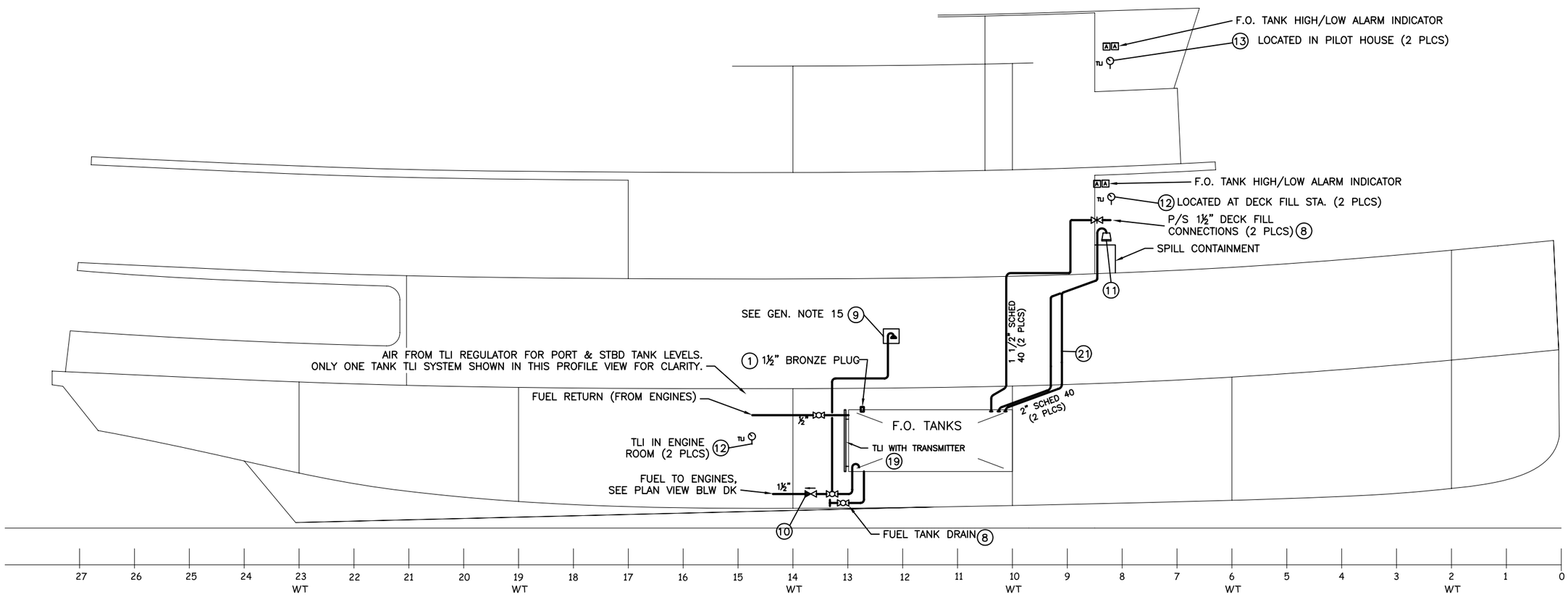

PROFILE VIEW

SCALE: N.T.S.

SCALE AS STATED DIMS IN INCHES UNLESS OTHERWISE STATED	Seaworthy Systems, Inc. P.O. BOX 965 ESSEX, CT 06426 USA TEL: (860) 767-9061 FAX: (860) 767-1263	CASCO BAY LINES PO BOX 4656 PORTLAND, ME 04112	TITLE 399 PASSENGER FERRY FUEL OIL SYSTEM SCHEMATIC DRG No. 283-32A-203 REV. – SHEET 2 OF 3 SSI FILE No. e:\active\projnumb\283-32\drafting\active\283-32A-203.dwg

DO NOT SCALE, IF IN DOUBT ASK

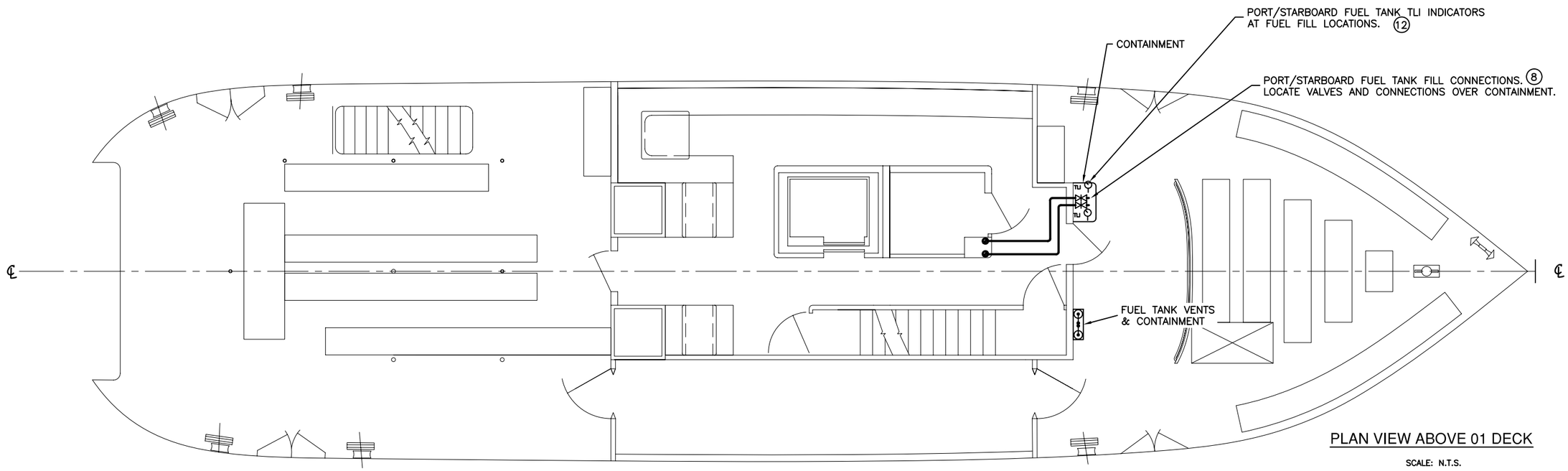

PLAN VIEW ABOVE 01 DECK

SCALE: N.T.S.

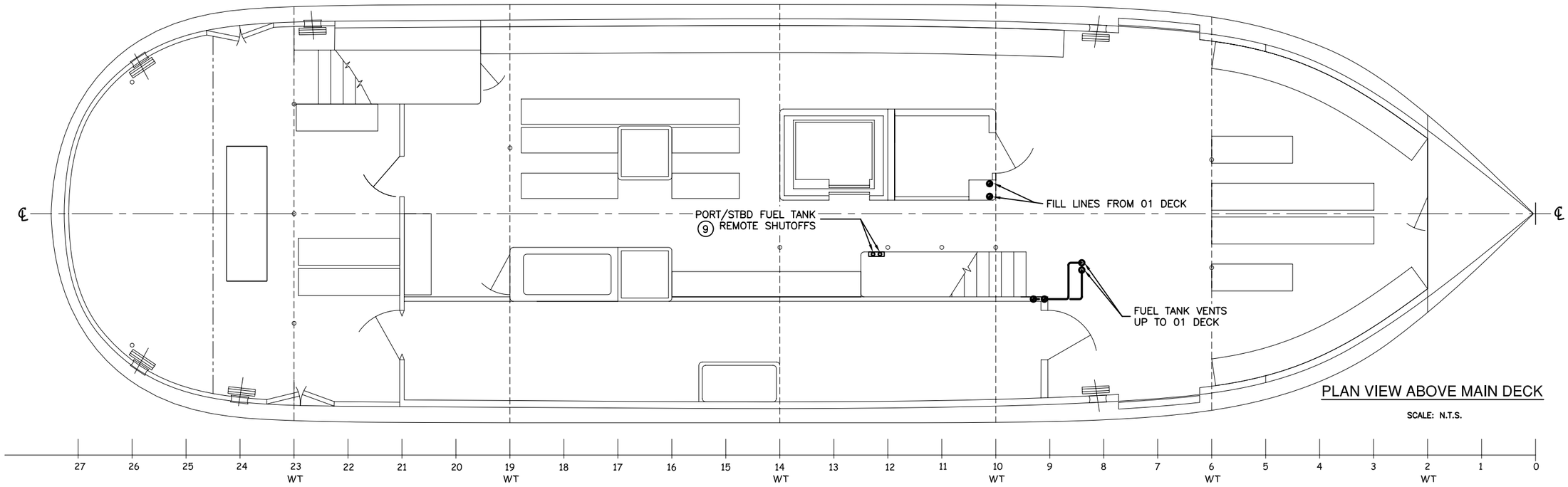

PLAN VIEW ABOVE MAIN DECK

SCALE: N.T.S.

SCALE AS STATED DIMS IN INCHES UNLESS OTHERWISE STATED	Seaworthy Systems, Inc. P.O. BOX 965 ESSEX, CT 06426 USA TEL: (860) 767-9061 FAX: (860) 767-1263	CASCO BAY LINES PO BOX 4656 PORTLAND, ME 04112	TITLE 399 PASSENGER FERRY FUEL OIL SYSTEM SCHEMATIC DRG No. 283-32A-203 REV. – SHEET 3 OF 3 SSI FILE No. s:\active\projnumb\283-32\drafting\active\283-32A-203.dwg