GENERAL NOTES:

1. THE MATERIALS, WORKMANSHIP AND INSTALLATION TO MEET THE REQUIREMENTS OF CFR 46 SUBCHAPTER K AND IEEE 45 , AND BE TO THE SATISFACTION OF THE USCG OCMI.

2. WIRING IS LISTED ON THE FOLLOWING DRAWINGS WITH INSULATION DESIGNATION FOLLOWED BY MCM. E.G. FXIU–83 IS A 4 CONDUCTOR STRANDED COPPER CROSS LINKED POLYETHYLENE INSULATED WITH THERMOPLASTIC JACKET UNARMORED CABLE OF 83,000 CM.

3. CIRCUIT BREAKERS TO BE RATED 10,000 AIC AND FOR SWITCHING SERVICE.

4. CIRCUIT BREAKERS ARE TO BE RETAINED BY SCREWS.

5. CABLE PENETRATIONS THROUGH WATERTIGHT AND/OR FIRE RATED BULKHEADS WILL BE IN AN APPROVED MANNER TO RETAIN THE WATERTIGHT AND FIRE INTEGRITY OF THE VESSEL.

6. THE MINIMUM WIRE GAGE FOR POWER CABLES WILL BE 6.5 MCM (12 AWG) AND 4.1 MCM (14 AWG) FOR CONTROL AND LIGHTING CIRCUITS.

7. PANEL LOAD WILL BE BALANCED WITHIN 18% BETWEEN PHASES AS PER IEEE 45.

8. CABLES WILL BE RUN SINGLE BANKED IN TRAYS AND SUPPORTED EVERY 24" WITH METAL CABLE CLAMPS.

9. ALL ELECTRICAL EQUIPMENT LOCATED WITHIN THE MACHINERY SPACE WILL BE OF DRIP PROOF CONSTRUCTION.

10. FLUORESCENT LIGHTS WILL BE UL 1570 LISTED.

11. INSULATION RESISTANCE OF FEEDERS AND BRANCH CIRCUITS WILL BE TESTED IN ACCORDANCE WITH IEEE 45.

12. ALL ELECTRICAL EQUIPMENT ENCLOSURES WILL BE SUITABLY BONDED TO THE VESSEL'S HULL.

13. BOM QUANTITIES ARE FOR INFORMATION ONLY AND MUST BE VERIFIED BY CONTRACTOR.

SYMBOL	DESCRIPTION
	SWITCH, 2–WAY
	PRESSURE SWITCH
	TEMPERATURE SWITCH
	STOP PUSH BUTTON
	START/STOP PB W/INDICATOR
	2–SPEED PB OPERATOR
	HAND–OFF–AUTO OPERATOR
	MOTOR STARTER (LVR OR LVP)
	ELECTRIC MOTOR
	FLUORESCENT LIGHT FIXTURE
	120 VAC RECEPTACLE
	INCANDESCENT LIGHT FIXTURE
	JUNCTION BOX
	250W HALOGEN FLOODLIGHT
	MISCELLANEOUS ELECTRICAL EQUIPMENT
	CIRCUIT BREAKER (3 PH SHOWN)
	3 PH GENERATOR
	TRANSFORMER
	SEARCHLIGHT

DO NOT SCALE, IF IN DOUBT ASK

CALCULATIONS
65 KW GENERATOR FEEDER AND CIRCUIT BREAKER
RATED AMP OUTPUT = 226A
FEEDER RATED FOR 1.15XRATED AMP OUTPUT = 260A
FEEDER SIZE FOR 90C, 4–COND CABLE = 300MCM
300MCM, 90C, 4–COND CABLE IS RATED FOR 290A

CIRCUIT BREAKER
CIRCUIT BREAKER RATING = 1.15XGENERATOR RATING = 260A

120/208V, 1PH PILOTHOUSE DISTRIBUTION PANEL FEEDER AND CIRCUIT BREAKER
PANEL DEMAND LOAD = TOTAL WATTS/VOLTAGE/1.73
TOTAL WATTS = CONNECTED LOAD + SPARE CIRCUIT BREAKER ALLOWANCE
SPARE CB ALLOWANCE = NO. OF SPARE CB'S X CONNECTED LOAD/NO. OF ACTIVE CIRCUITS
CONNECTED LOAD = 10,560
SPARE CB ALLOWANCE = 2 X 10,560/19 = 1,340
TOTAL WATTS = 10,560 + 1,340 = 11,900
PANEL DEMAND LOAD = 11,900/208/1.73 = 33 A
FEEDER SIZE FOR 90C, 4–COND CABLE = 10 AWG OR 10.4 MCM
FEEDER SELECTED = 1 AWG OR 83.7 MCM
1AWG, 90C, 4–COND CABLE IS RATED AT 131A

CIRCUIT BREAKER RATING
CIRCUIT BREAKER SHOULD BE RATED BETWEEN PANEL DEMAND LOAD AND CABLE RATING
CIRCUIT BREAKER TRIP RATING = 50A

208V, ENGINE ROOM LIGHTING & POWER DISTRIBUTION PANEL FEEDER AND CIRCUIT BREAKER
PANEL DEMAND LOAD = SUM OF FLA + .25*LARGEST MOTOR FLA + SPARE CIRCUIT BREAKER ALLOWANCE
SPARE CB ALLOWANCE = NO.OF SPARE CB'S X CONNECTED LOAD/NO. OF ACTIVE CIRCUITS
CONNECTED LOAD = SUM OF LOAD FLA + .25*LARGEST MOTOR FLA
CONNECTED LOAD = 84.1 A
SPARE CB ALLOWANCE = 2X84.1/22/1.73 = 4.4 A
PANEL DEMAND LOAD = 84.1 + 4.4 = 88.5
FEEDER SIZE FOR 90C, 4–COND CABLE =2 AWG OR 66 MCM
FEEDER SELECTED = 1 AWG OR 83.7 MCM
1 AWG, 90C, 4–COND IS RATED AT 131A

CIRCUIT BREAKER RATING
CIRCUIT BREAKER IS RATED BETWEEN PANEL DEMAND LOAD AND AMPACITY OF CABLE
CIRCUIT BREAKER TRIP RATING = 100A

208V, AIR CURTAIN DISTRIBUTION PANEL FEEDER AND CIRCUIT BREAKER
PANEL DEMAND LOAD = SUM OF FLA + .25*LARGEST MOTOR FLA + SPARE CIRCUIT BREAKER ALLOWANCE
SPARE CB ALLOWANCE = NO.OF SPARE CB'S X CONNECTED LOAD/NO. OF ACTIVE CIRCUITS
CONNECTED LOAD = SUM OF LOAD FLA + .25*LARGEST MOTOR FLA
CONNECTED LOAD = 8.9 A
SPARE CB ALLOWANCE = 2X8.9/8 = 2.2 A
PANEL DEMAND LOAD = 8.9 + 2.2 = 11.1
FEEDER SIZE FOR 90C, 4–COND CABLE =12 AWG OR 6.5 MCM
FEEDER SELECTED = 10 AWG OR 10.4 MCM
10 AWG, 90C, 4–COND IS RATED AT 38 A

CIRCUIT BREAKER RATING
CIRCUIT BREAKER IS RATED BETWEEN PANEL DEMAND LOAD AND AMPACITY OF CABLE
CIRCUIT BREAKER TRIP RATING = 30A

BILL OF MATERIALS

ITEM	PART CODE	MANUFACTURER	DESCRIPTION	MATERIAL	QTY	MOD.
1	M65C2	NORTHERN LIGHTS	208 V, 3 PH, 65 KW DIESEL GENERATOR	–	2	–
2	–	IPS	SWITCHBOARD, USCG SUBCHAPTER K	–	1	–
3	T–3–53546–S	ACME	ISOLATION TRANSFORMER, 230 V, 1 PH/208 V 1 PH, 7.5 KVA	–	1	–
4	NQOD430L100CU/MHC23WP	SQUARE D	208 V, 3 PH DISTRIBUTION PANEL, NEMA 12, 30 POLES W/NEUTRAL	–	2	–
5	NQOD424L100CU/MHC23WP	SQUARE D	208 V, 3 PH DISTRIBUTION PANEL, NEMA 12, 24 POLES W/NEUTRAL	–	1	–
6	–	–	30 A, 2 POLE, 208 VAC SHORE POWER CIRCUIT BREAKER	–	1	–
7	–	–	30, 2 POLE, 230 V SHORE POWER RECEPTACLE	–	1	–
8	JRS5K	GOULD	FRESH WATER PRESSURE SET, 1/2 HP, 208V, 1 PH	–	1	–
9	JRS5K	GOULD	SANITARY WATER PRESSURE SET, 1/2 HP, 208 V, 1 PH	–	1	–
10	44V 24 DK3	HARTZELL	VENTILATION FAN, 208 V, 3 PH, 3 HP, 2 SPEED, 24"	–	1	–
11	CLASS 8810 SCA–1	SQUARE D	VENTILATION FAN MOTOR STARTER, NEMA 1, 2 SPEED	–	1	–
12	T 30	INGERSOL RAND	AIRCOMPRESSOR, 15 SCFM, 175 PSIG	–	1	–
13	SSH–10A SH L 5 BO	GOULD	FIREPUMP, 230 TDH, 85 GPM, 10 HP, 208 V 3 PH	–	1	–
14	CLASS 8526 SDA21	SQUARE D	FIREPUMP MOTOR STARTER, 208 V, 3 PH, NEMA 2	–	1	–
15	K5XL	KANALFLAKT	120 CFM BATHROOM EXHAUST FAN, 120 VAC	–	2	–
16	DPM 5714–D NEMA 4	INNOVATIVE COMPONENTS	TANK LEVEL INDICATORS	–	15	–
17	7163	CRANE DEMING	SEWAGE TANK PUMP, 3 HP, 208 V, 3 PH	–	2	–
18	CLASS 8536 SCA–1	SQUARE D	SEWAGE TANK PUMP MOTOR STARTER, 208 V 3 PH NEMA 1	–	2	–
19	MP–1–36	POWER AIRE	DOOR AIR CURTAIN FANS, MAIN AND UPPER DECK, 208/1/60	–	8	–
20	–	CANTON	ELEVATOR, 20 HP, 208 V, 3 PH	–	1	–
21	M100R	L.C. DOANE	OVHD, RECESSED MT. 3X20W FLUOR. LT., 2–CIRCUIT, 120 VAC	–	27	–
22	M100R	L.C. DOANE	OVHD. REC, MT. 3X20W FLUOR. LT, 2X20 120 VAC, 1X20 24 VDC	–	14	–
23	M3	L.C. DOANE	OVHD EXT. SURF. MT. 2X20W FLUOR. LT., 120 VAC	–	22	–
24	M3	L.C. DOANE	OVHD. EXT. SURF. MT 3X20W FLUOR. LT. 2X20 120 VAC, 1X20 24 VDC	–	18	–
25	717B	PAULUHN	OVHD SURF MT. PENDANT LT. W/75W 120 VAC BULB	–	16	–
26	729B	PAULUHN	BULKHEAD MT. PENDANT LIGHT W/25 W 24 VDC BULB	–	16	–
27	2722A	PAULUHN	2–WAY INTERIOR LIGHT SWITCH W/BOX	–	A/R	–
28	2724A	PAULUHN	3–WAY INTERIOR LIGHT SWITCH W/BOX	–	A/R	–
29	2725A	PAULUHN	4–WAY INTERIOR LIGHT SWITCH W/BOX	–	A/R	–
30	2705B–125	PAULUHN	INTERIOR DUPLEX RECEPTACLE 120 VAC/20A W/BOX	–	A/R	–
31	2405A–125	PAULUHN	EXTERIOR DUPLEX RECEPTACLE, 120V, 20A W/BOX	–	A/R	–
32	862A	PAULUHN	EXTERIOR 2–WAY LIGHT SWITCH W/BOX, 120 VAC, 20A	–	A/R	–
33	QA1603	PAULUHN	HALOGEN FLOODLIGHT, 300W, 120 VAC	–	10	–
34	PT 24–40	NEWMAR	BATTERY CHARGER, 24 VDC 40 A OUTPUT, 120 VAC INPUT W/AMMETER	–	3	–
35	EHD–S	SLOAN	ELECTRIC HAND DRYER, 120 V, 2400 W	–	2	–
36	CC–5200, 5136A	CORNELL–CARR	WINDOW WIPER, EXTERNAL, 120 VAC, W/CONTROL UNIT	–	8	–
37	CREFORM	CARLISLE & FINCH	10" SEARCHLIGHT, 500W, 900,000 CD	–	1	–
38	–	BURNHAM	BOILER, HYDRONIC SYSTEM	–	1	–
39	IQ–301	ANSUL	FIRE DETECTION SYSTEM, USCG APPROVAL	–	1	–
40	100 ISC	PELCO	VIDEO SURVEILLANCE SYSTEM	–	A/R	–
41	TFXU	INDEECO	PILOTHOSE WINDOW DEFOGGER UNIT, 5 KW, 208/3/60	–	1	–
42	–	–	PIPE HEATING TAPE, 6 W/FT, 120 V	–	A/R	–
43	–	SQUARE D	EMERGENCY STOP PB STATION	–	1	–
44	–	SQUARE D	REMOTE START/STOP OPERATOR STATION	–	1	–
45	–	–	CO2 RELEASE STOP SWITCH	–	A/R	–
46	M421C	L.C. DOANE	STEP AND PATH LIGHT, 8W FLORESCENT	–	23	–
47	–	–	HW CIRCULATOR PUMP, 1HP, 208/1/60	–	1	–
48	RP1	CEC	POINT OF USE WATER HEATER, 208V, 2200 W	–	3	–
–	–	–	–	–	–	–
50	–	JASTRAM	STEERING GEAR HPU, 3HP, 208V 3PH	–	2	–
51	–	TRANE	FAN COIL UNIT HEATERS	–	4	–
52	44–12–DA	HARTZELL	PILOTHOUSE DEFOGGER FAN	–	1	–
53	HPRP 35	HANKISON	COMPRESSED AIR DRYER	–	1	–
54	–	–	PILOTHOUSE EXH FAN, 120 V, 125 CFM	–	2	–
55	MP 8	MP PUMPS	BILGE PUMP MOTOR 3 HP, 208V, 3PH	–	1	–
56	CLASS 8536 SCA–1	SQUARE D	BILGE PUMP MOTOR STARTER, 208, 3PH, NEMA 1	–	1	–
57	H324DS	SQUARE D	BOW THRUSTER DISCONN SWITCH, 300A, 250V, 3 POLE, NEMA 4	–	1	–
58	NQOD20L100CU/MHC23WP	SQUARE D	208 V, 1 PH DISTRIBUTION PANEL, NEMA 12, 20 POLES W/NEUTRAL	–	1	–
59	–	TRANE	HEATER, 1 1/4" TRANE ARCH. WALL FIN SLOPE TOP ENCLOSURE	–	120FT	–

JOHN ALEXANDER HUNTER
STATE OF WASHINGTON
33971
REGISTERED PROFESSIONAL ENGINEER
EXPIRES 5-7-12
5-10-10

APPROVALS:	SUBMIT DATE	APPRVD BY	APPRVD DATE	RE–SUBMIT DATE	APPRVD BY	APPRVD DATE
OWNER	–	–	–	–	–	–
USCG	–	–	–	–	–	–
ABS	–	–	–	–	–	–
USPHS	–	–	–	–	–	–

REV.	DATE	REVISION	PAGE	ZONE	AUTH®
–	–	–			
–	–	–			
–	–	–			
–	–	–			
–	–	–			
B	–	–			
A	–	–			

NO.	REFERENCES
7	–
6	–
5	–
4	–
3	–
2	–
1	–

CHECKED JAH 5–10–10
AUTH® JEK 5–10–10
DRAWN DAR
ORIG. DATE 5–10–10
SCALE NTS
DIMS IN INCHES UNLESS OTHERWISE STATED

Seaworthy Systems, Inc.
P.O. BOX 965
ESSEX, CT 06426
USA
TEL: (860) 767–9061
FAX: (860) 767–1263

CASCO BAY LINES
PO BOX 4656
PORTLAND, ME 04112

TITLE 399 PASSENGER FERRY
AC ELECTRICAL SYSTEM ONE LINE DIAGRAM

DRG No. 283–32A–303 REV. – SHEET 1 OF 6
SSI FILE No. e:\active\projnumb\283–32\drafting\active\283–32A–303.dwg

DO NOT SCALE, IF IN DOUBT ASK

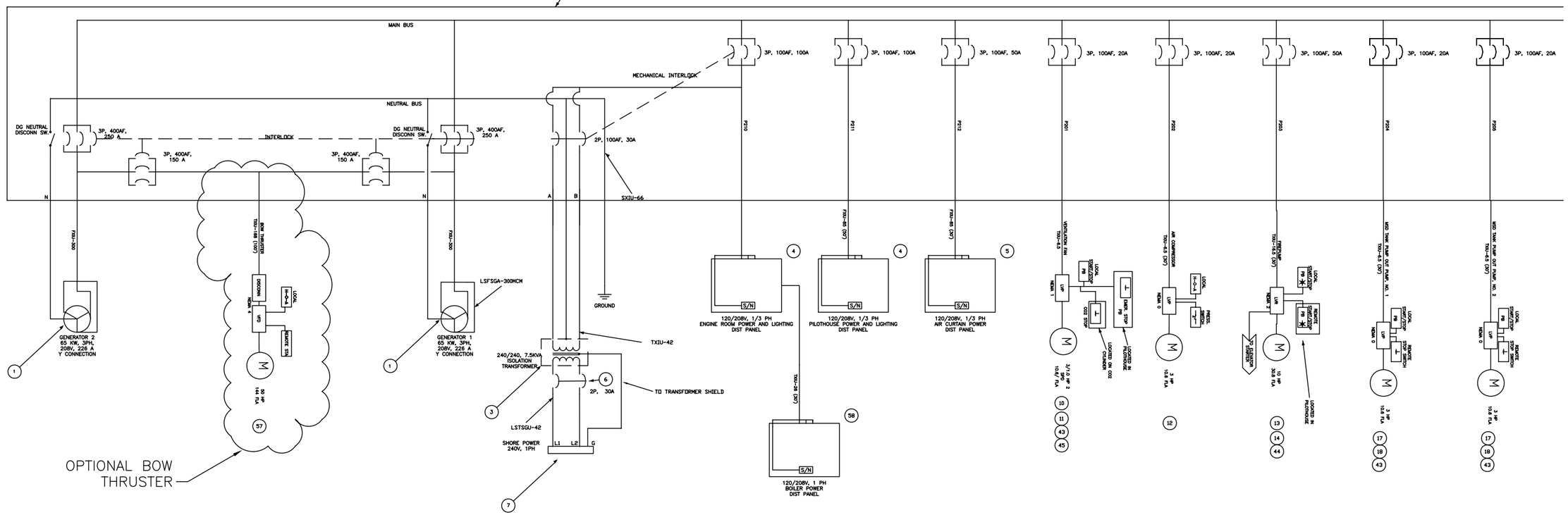

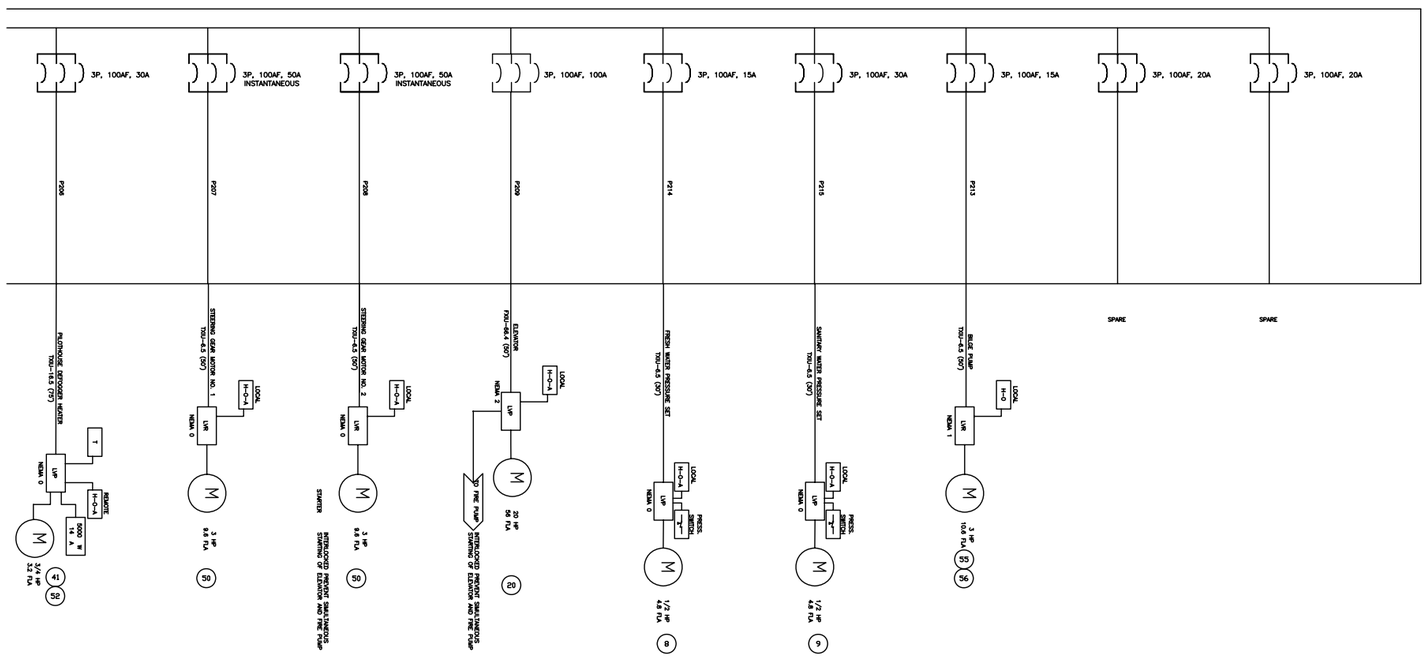

208 V, 3 PH SWITCHBOARD AND DISTRIBUTION

SCALE AS STATED	Seaworthy Systems, Inc. P.O. BOX 965 ESSEX, CT 06426 USA TEL: (860) 767-9061 FAX: (860) 767-1263	CASCO BAY LINES PO BOX 4656 PORTLAND, ME 04112	TITLE 399 PASSENGER FERRY AC ELECTRIC SYSTEM ONE LINE DIAGRAM
DIMS IN INCHES UNLESS OTHERWISE STATED			DRG No. 283-32A-303 REV. — SHEET 2 OF 6
			SSI FILE No. s:\active\projnumb\283-32\drafting\active\283-32A-303.dwg

DO NOT SCALE, IF IN DOUBT ASK

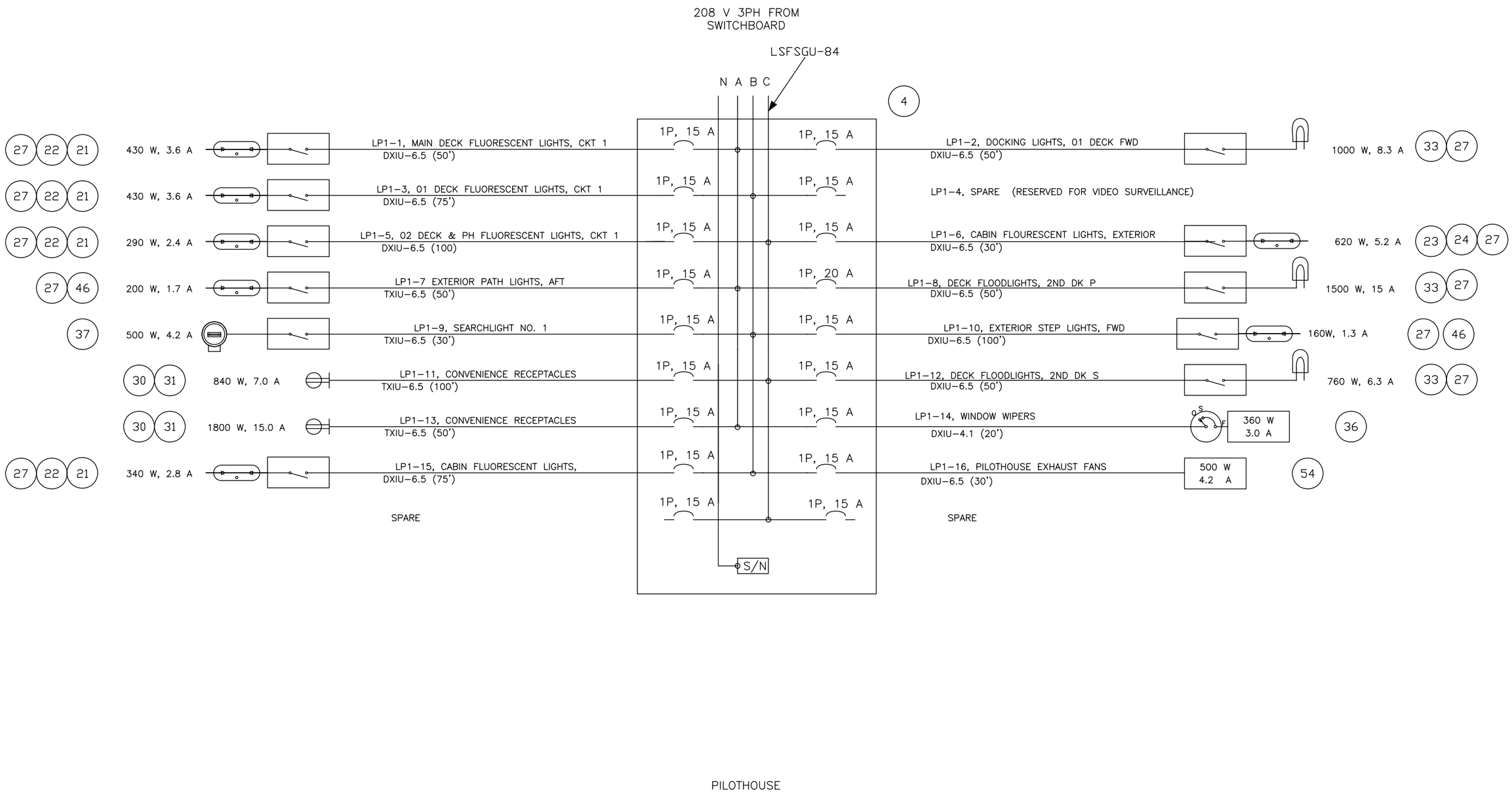

120/208 VAC PILOTHOUSE LIGHTING PANEL LP1

SCALE AS STATED DIMS IN INCHES UNLESS OTHERWISE STATED	Seaworthy Systems, Inc. P.O. BOX 965 ESSEX, CT 06426 USA TEL: (860) 767-9061 FAX: (860) 767-1263	CASCO BAY LINES PO BOX 4656 PORTLAND, ME 04112	TITLE 399 PASSENGER FERRY AC ELECTRIC SYSTEM ONE LINE DIAGRAM DRG No. 283-32A-303 REV. – SHEET 3 OF 6 SSI FILE No. s:\active\projnumb\283-32\drafting\active\283-32A-303.dwg

DO NOT SCALE, IF IN DOUBT ASK

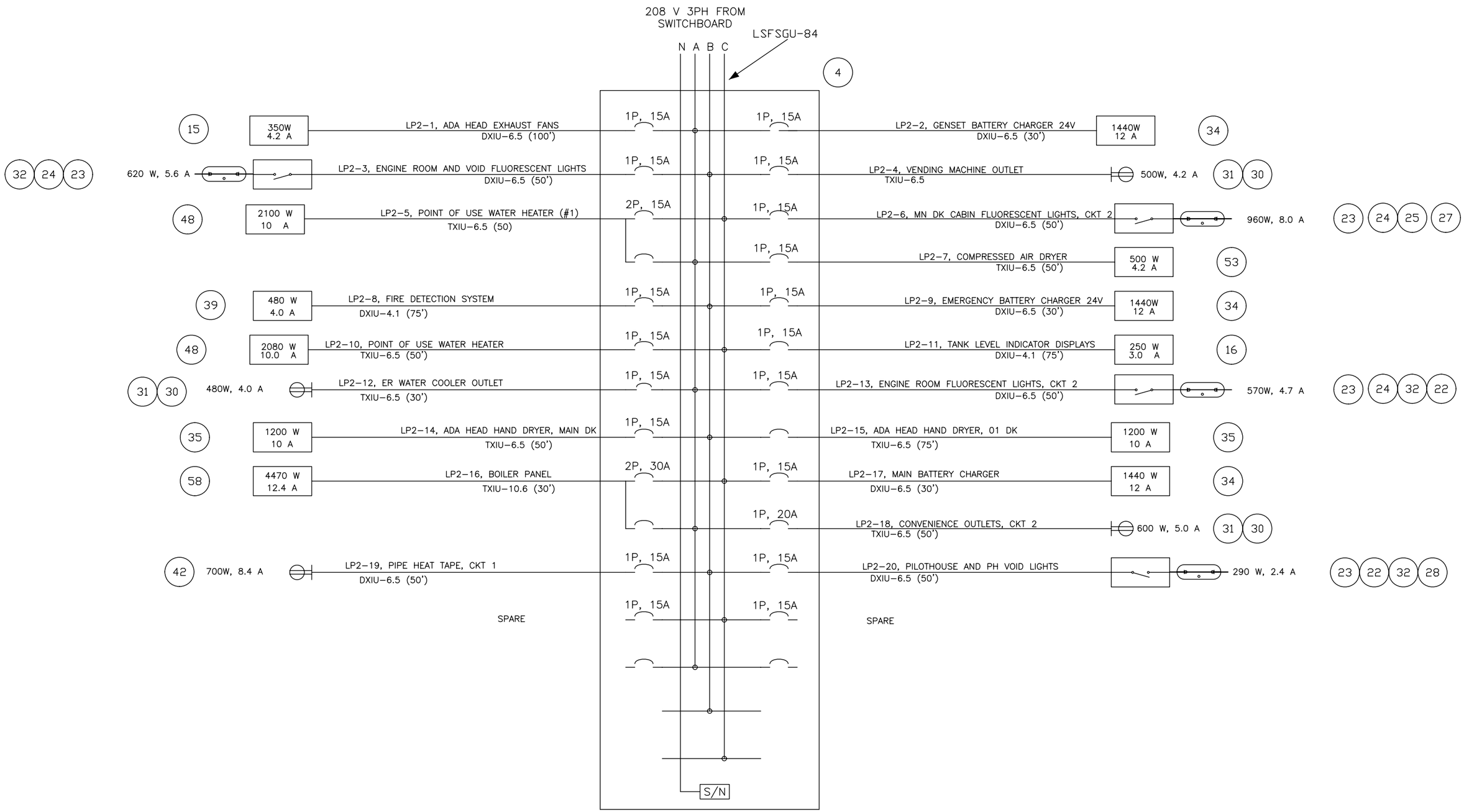

120/208 VAC ENGINE ROOM POWER AND LIGHTING PANEL LP2

SCALE AS STATED DIMS IN INCHES UNLESS OTHERWISE STATED	Seaworthy Systems, Inc. P.O. BOX 965 ESSEX, CT 06426 USA TEL: (860) 767-9061 FAX: (860) 767-1263	CASCO BAY LINES PO BOX 4656 PORTLAND, ME 04112	TITLE 399 PASSENGER FERRY AC ELECTRIC SYSTEM ONE LINE DIAGRAM DRG No. 283-32A-303 REV. – SHEET 4 OF 6 SSI FILE No. s:\active\projnumb\283-32\drafting\active\283-32A-303.dwg

DO NOT SCALE, IF IN DOUBT ASK

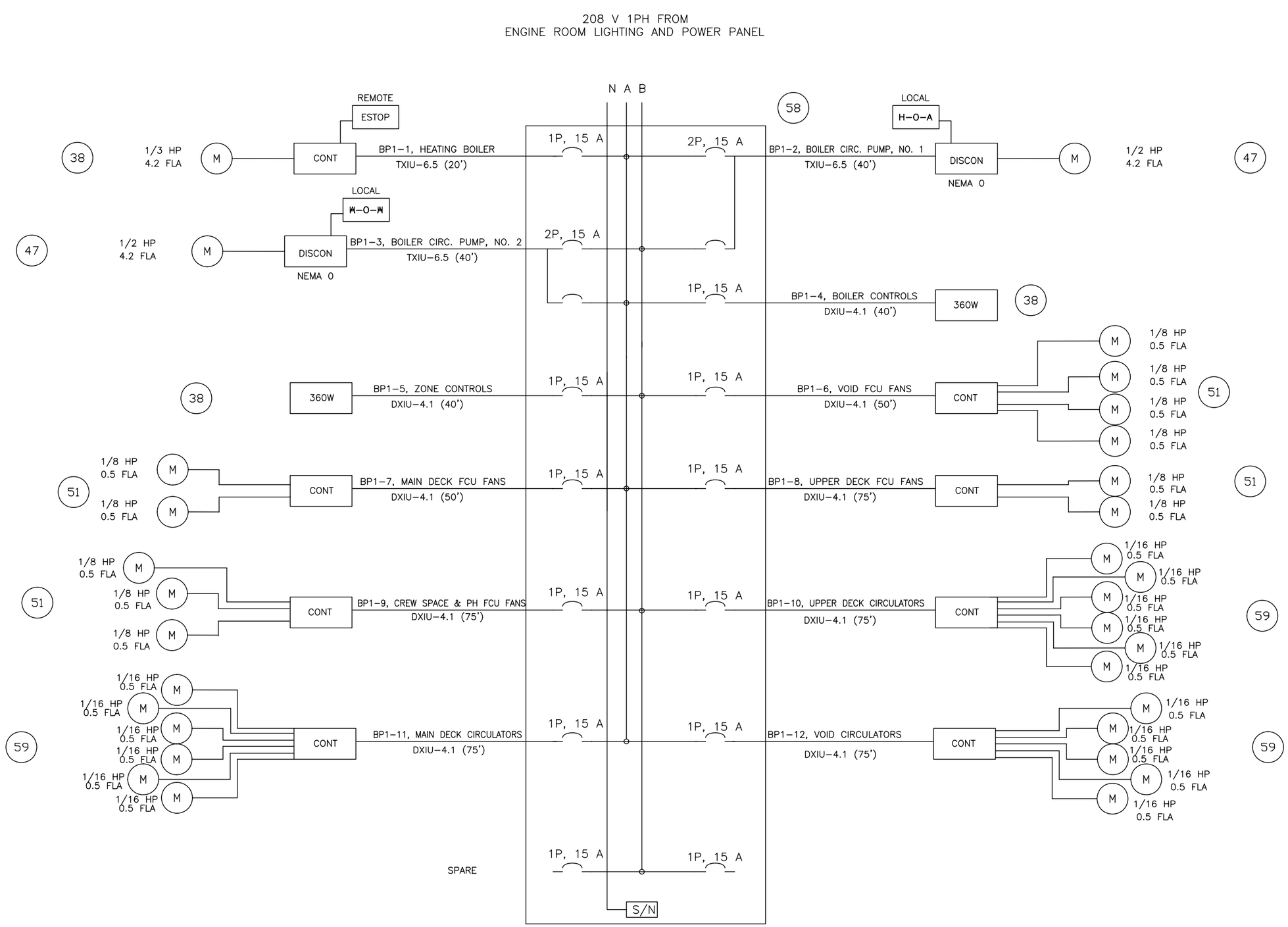

120/208 VAC 1 PH ENGINE ROOM
BOILER POWER PANEL

SCALE AS STATED DIMS IN INCHES UNLESS OTHERWISE STATED	Seaworthy Systems, Inc. P.O. BOX 965 ESSEX, CT 06426 USA TEL: (860) 767-9061 FAX: (860) 767-1263	CASCO BAY LINES PO BOX 4656 PORTLAND, ME 04112	TITLE 399 PASSENGER FERRY AC ELECTRIC SYSTEM ONE LINE DIAGRAM
			DRG No. 283-32A-303 REV. — SHEET 5 OF 6
			SSI FILE No. s:\active\projnumb\283-32\drafting\active\283-32A-303.dwg

DO NOT SCALE, IF IN DOUBT ASK

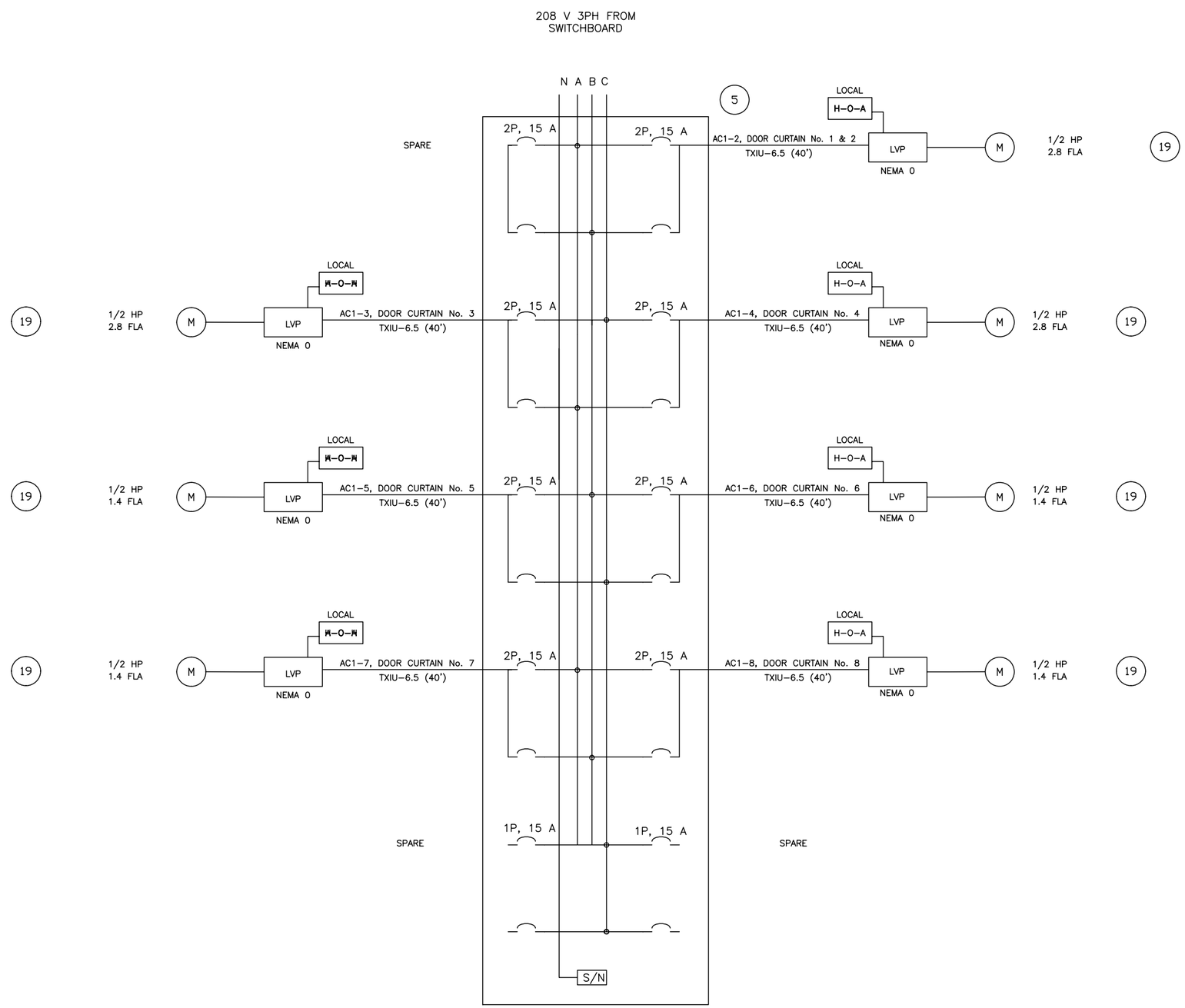

120/208 VAC 3 PH ENGINE ROOM AIR CURTAIN PANEL

SCALE AS STATED DIMS IN INCHES UNLESS OTHERWISE STATED	Seaworthy Systems, Inc. P.O. BOX 965 ESSEX, CT 06426 USA TEL: (860) 767-9061 FAX: (860) 767-1263	CASCO BAY LINES PO BOX 4656 PORTLAND, ME 04112	TITLE 399 PASSENGER FERRY AC ELECTRIC SYSTEM ONE LINE DIAGRAM DRG No 283-32A-303 REV. – SHEET 6 OF 6 SSI FILE No. s:\active\projnumb\283-32\drafting\active\283-32A-303.dwg