GENERAL NOTES:

1. THE MATERIALS, WORKMANSHIP AND INSTALLATION TO MEET THE REQUIREMENTS OF CFR 46 SUBCHAPTER K AND IEEE 45, AND TO BE TO THE SATISFACTION OF THE USCG OCMI.

2. ALL DIMENSIONS ARE APPROXIMATE AND SHOULD BE VERIFIED IN THE FIELD PRIOR TO INSTALLATION.

3. CIRCUIT BREAKERS TO BE RATED FOR SWITCHING SERVICE.

4. CIRCUIT BREAKERS ARE TO BE RETAINED BY SCREWS.

5. CABLE PENETRATIONS THROUGH WATERTIGHT AND/OR FIRE RATED BULKHEADS WILL BE IN AN APPROVED MANNER TO RETAIN THE WATERTIGHT AND FIRE INTEGRITY OF THE VESSEL.

6. THE MINIMUM WIRE GAGE FOR POWER CABLES WILL BE 12 AWG AND 14 AWG FOR CONTROL AND LIGHTING CIRCUITS.

7. PANEL LOAD WILL BE BALANCED WITHIN 18% BETWEEN PHASES AS PER IEEE 45.

8. CABLES WILL BE RUN SINGLE BANKED IN TRAYS AND SUPPORTED EVERY 24" WITH METAL CABLE CLAMPS.

9. ALL ELECTRICAL EQUIPMENT LOCATED WITHIN THE MACHINERY SPACE WILL BE OF DRIP PROOF CONSTRUCTION.

10. FLUORESCENT LIGHTS WILL BE UL 1570 LISTED.

11. INSULATION RESISTANCE OF FEEDERS AND BRANCH CIRCUITS WILL BE TESTED IN ACCORDANCE WITH IEEE 45.

12. ALL ELECTRICAL EQUIPMENT ENCLOSURES WILL BE SUITABLY BONDED TO THE VESSEL'S HULL.

13. BOM QUANTITIES ARE FOR INFORMATION ONLY AND MUST BE VERIFIED BY THE CONTRACTOR.

DO NOT SCALE, IF IN DOUBT ASK

SYMBOL	DESCRIPTION
	SWITCH, 2-WAY
	PRESSURE SWITCH
	TEMPERATURE SWITCH
	STOP PUSH BUTTON
	START/STOP PB W/INDICATOR
	2-SPEED PB OPERATOR
	HAND-OFF-AUTO OPERATOR
	MOTOR STARTER (LVR OR LVP)
	ELECTRIC STARTER
	FLORESCENT LIGHT FIXTURE
	BATTERY SWITCH (ONE POLE SHOWN)
	INCANDESCENT LIGHT FIXTURE
	JUNCTION BOX
	BATTERY
	MISCELLANEOUS ELECTRICAL EQUIPMENT
	CIRCUIT BREAKER (3 PH SHOWN)
	BATTERY CHARGER
	ENGINE DRIVEN ALTERNATOR
	BATTERY ISOLATOR
	VARIABLE SPEED SWITCH

BILL OF MATERIALS

ITEM	PART CODE	MANUFACTURER	DESCRIPTION	MATERIAL	QTY	MOD.
1	90-2061	BASS PANELS	24 VDC DISTRIBUTION PANEL W/100 A MAIN AND BRANCH CIRCUITS	–	1	–
	–		AS NOTED, SURFACE MOUNT, MUST MEET REQMTS OF 46 CFR SUB K	–		–
2	90-3203	BASS PANELS	24 VDC DISTRIBUTION PANEL W/50 A MAIN AND BRANCH CIRCUITS	–	1	–
	–		AS NOTED, FLUSH MOUNT, MUST MEET REQMTS OF 46 CFR SUB K	–		–
3	90-3203	BASS PANELS	24 VDC DISTRIBUTION PANEL W/50 A MAIN AND BRANCH CIRCUITS	–	1	–
	–		AS NOTED, FLUSH MOUNT, MUST MEET REQMTS OF 46 CFR SUB K	–		–
4	90-2061	BASS PANELS	24 VDC DISTRIBUTION PANEL W/50 A MAIN AND BRANCH CIRCUITS	–	4	–
	–		AS NOTED, SURFACE MOUNT, MUST MEET REQMTS OF 46 CFR SUB K	–		–
5	33-28	POWERLINE	BATTERY ISOLATOR	–	2	–
6	–	JASTRAM	STEERING GEAR CONTROLS	–	2	–
7	729B	PAULUHN	BULKHEAD MT. PENDANT LT. W/25 W BULB	–	17	–
8	M3	L.C. DOANE	3X20 W EXTERIOR LT W/1X20 24 VDC CIRCUIT	–	18	–
9	M100R	L.C. DOANE	3X20 W INTERIOR LT W/1X20 24 VDC CIRCUIT	–	14	–
10	004 532-171	HELLA MARINE	24 VDC OVERHEAD LIGHT FIXTURE W/DIMMER SWITCH	–	2	–
11	ST-10ASF	MURPHY	ALARM PANEL, 10 INPUTS	–	3	–
12	32-24-6	NEWMAR	24-12 VDC DC-DC CONVERTER	–	3	–
13	117 AMP	KAHLENGERG	441 HZ WHISTLE	–	1	–
14	1944C/NT	FURUNO	FURUNO 10.4" LCD RADAR W/4' ANTENNA	–	2	–
15	RESERVE	RESERVE	DEPTH SOUNDER W/200 KHZ XDUCER	–	1	–
16	–	JASTRAM	RUDDER ANGLE INDICATOR	–	4	–
17	–	MACKENZIE	PA SYSTEM	–	1	–
18	PT 24-45U	NEWMAR	24 V, 40 A BATTERY CHARGER, W/AMMETER, USCG APPROVED	–	2	–
19	12HHG8DM	ROLLS	ROLLS 12V, 230 A-HR DEEP CYCLE BATTERY	–	6	–
20	HM485	MIDSTATE	2 X 8D BATTERY BOX	–	5	–
21	IC-M602	ICOM	MARINE VHF W/ANTENNA	–	2	–
22	–	–	EMERGENCY LIGHT RELAY, 120 VAC COIL, 2 POLE, 20 AMP	–	5	–
23	55400-1	AQUA SIGNAL	MAST LIGHT, UL1104, 24 VDC	–	1	–
24	55500-1	AQUA SIGNAL	STERN LIGHT, UL1104, 24 VDC	–	1	–
25	55300-1	AQUA SIGNAL	RUNNING LIGHT, PORT, UL1104, 24 VDC	–	1	–
26	55200-1	AQUA SIGNAL	RUNNING LIGHT, STARBOARD, UL1104, 24 VDC	–	1	–
27	CREFORM	CARLISLE & FINCH	10" SEARCHLIGHT, 24 VDC, 500,000 CD	–	1	–
28	ULS-301-S	INNOVATIVE COMPONENTS	ULTRASONIC TANK LEVEL INDICATORS	–	–	–
29	–	–	–	–	–	–
30	–	–	–	–	–	–
31	2300A	GUEST	BATTERY SELECTOR SWITCH	–	1	–
32	2303A	GUEST	BATTERY DISCONNECT SWITCH	–	9	–
33	–	TBD	ENGINE DRIVEN ALTERNATOR, 24 VDC, 80 A	–	4	–
34	M-511	KAHLENGERG	WHISTLE CONTROL, 24 VDC	–	1	–
35	GP37	FURUNO	GPS	–	1	–
36	ST 60	RAYMARINE	ANEMOMETER	–	1	–
37	A-60 RECT	ACTION AIR	750 MM X 750 MM FIRE DAMPER	–	2	–
38	TBD	TBD	FIRE DOOR ELECTRO MAGNETIC HOLD OPEN COILS	–	2	–
39	1192AS	PAULUHN	CHART LIGHT, 24 VDC, 25 W, ONE WHITE/ONE RED W/SWITCH & DIMMER	–	2	–
40	–	–	INSTRUMENT LIGHT2, 24 VDC, W/DIMMER	–	A/R	–
41	90-3203	BASS PANELS	24 VDC DISTRIBUTION PANEL W/100 A MAIN AND BRANCH CIRCUITS	–	1	–
			AS NOTED, FLUSH MOUNT, MUST MEET REQMTS OF 46 CFR SUB K			
42	CCF EURO	TAYLORBRITE	READING LIGHT, 24 VDC, 6.6 W, W/SWITCH	–	11	–
43	17830-024	JABSCO	OIL DRAIN TRANSFER PUMP	–	1	–
44	–	–	–	–	–	–
45	SC-60	FURUNO	GPS SATELLITE COMPASS	–	1	–
46	AP5M/LE-SS-1G	AIPHONE	INTERCOM SYSTEM	–	A/R	–
47	–	HOSE-MCCANN	SOUND POWERED PHONE LIGHT AND BUZZER	–	1	–
48	KB-30	KAHLENBERG	SHIP'S HORN PLUS LOUD HAILER	–	1	–
49	30H 108M	ROLLS	100 A-HR 12 V BATTERY	–	4	–
50	–	–	–	–	–	–

JOHN ALEXANDER HUNTER
STATE OF WASHINGTON
33971
REGISTERED PROFESSIONAL ENGINEER
EXPIRES 5-7-12

5-10-10

APPROVALS:	SUBMIT DATE	APPRVD BY	APPRVD DATE	RE-SUBMIT DATE	APPRVD BY	APPRVD DATE
OWNER	–	–	–	–	–	–
USCG	–	–	–	–	–	–
ABS	–	–	–	–	–	–
USPHS	–	–	–	–	–	–

REV.	DATE	REVISION	PAGE	ZONE	AUTH.
–	–	–			
–	–	–			
–	–	–			
–	–	–			
–	–	–			
B	–	–			
A	–	–	–	–	–

NO.	REFERENCES
7	–
6	–
5	–
4	–
3	–
2	–
1	–

CHECKED	AUTH.	SCALE
JAH 5-10-10	JEK 5-10-10	NTS
DRAWN	ORIG DATE	DIMS IN INCHES UNLESS OTHERWISE STATED
JM	5-10-10	

Seaworthy Systems, Inc.
P.O. BOX 965
ESSEX, CT 06426
USA
TEL: (860) 767-9061
FAX: (860) 767-1263

CASCO BAY LINES
PO BOX 4656
PORTLAND, ME 04112

TITLE 399 PASSENGER FERRY
24 VDC ELECTRICAL SYSTEM
ONE LINE DIAGRAM

DRG No. 283-32A-304 REV. – SHEET 1 OF 6

SSI FILE No. s:\active\projnumb\283-32\drafting\active\283-32A-304.dwg

DO NOT SCALE, IF IN DOUBT ASK

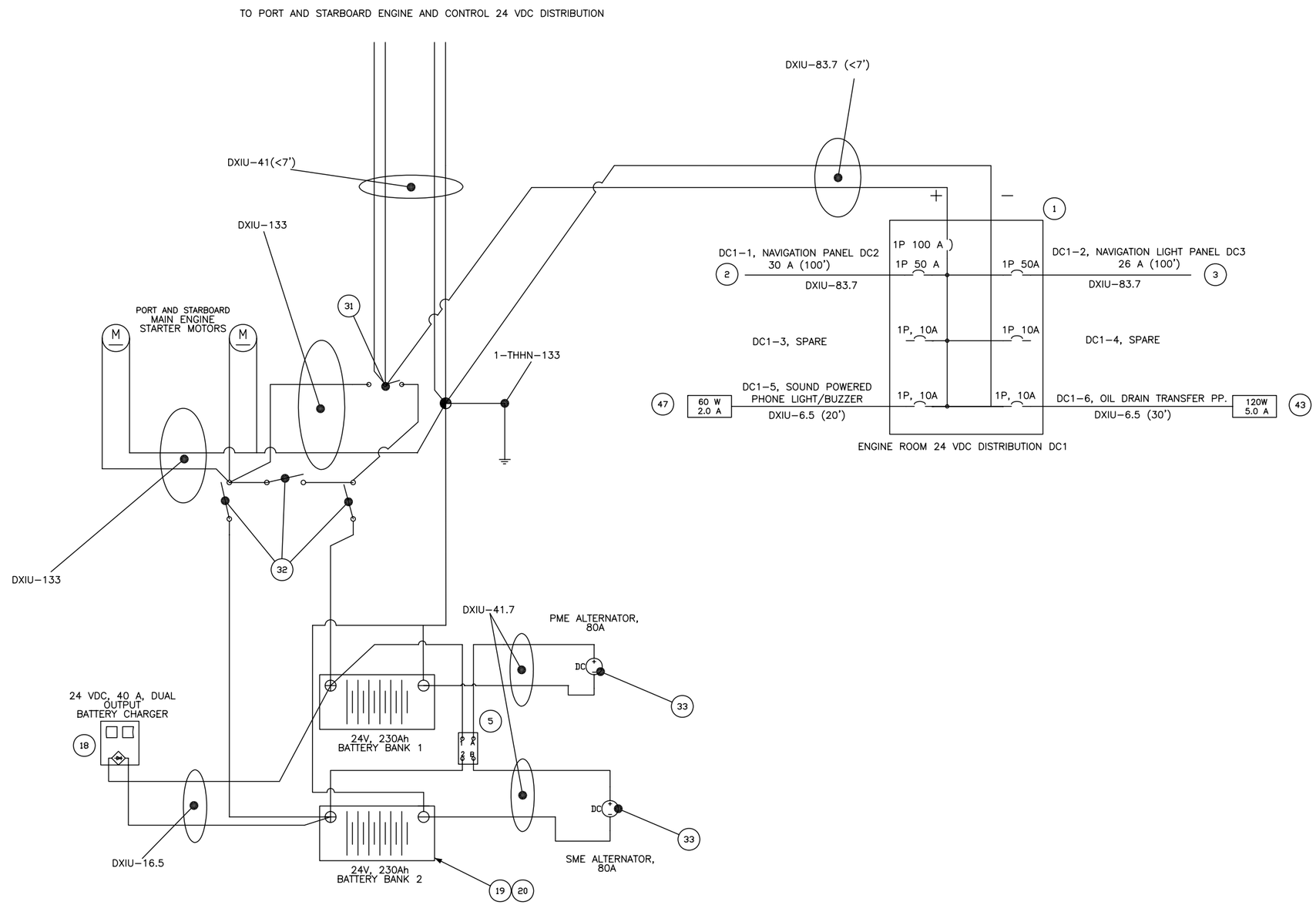

24 VDC MAIN DISTRIBUTION

SCALE AS STATED DIMS IN INCHES UNLESS OTHERWISE STATED	Seaworthy Systems, Inc. P.O. BOX 965 ESSEX, CT 06426 USA TEL: (860) 767–9061 FAX: (860) 767–1263	CASCO BAY LINES PO BOX 4656 PORTLAND, ME 04112	TITLE 399 PASSENGER FERRY 24VDC ELECTRICAL SYSTEM ONE LINE DIAGRAM DRG No. 283–32A–304 REV. – SHEET 2 OF 6 SSI FILE No. e:\active\projnumb\283–32\drafting\active\283–32A–304.dwg

DO NOT SCALE, IF IN DOUBT ASK

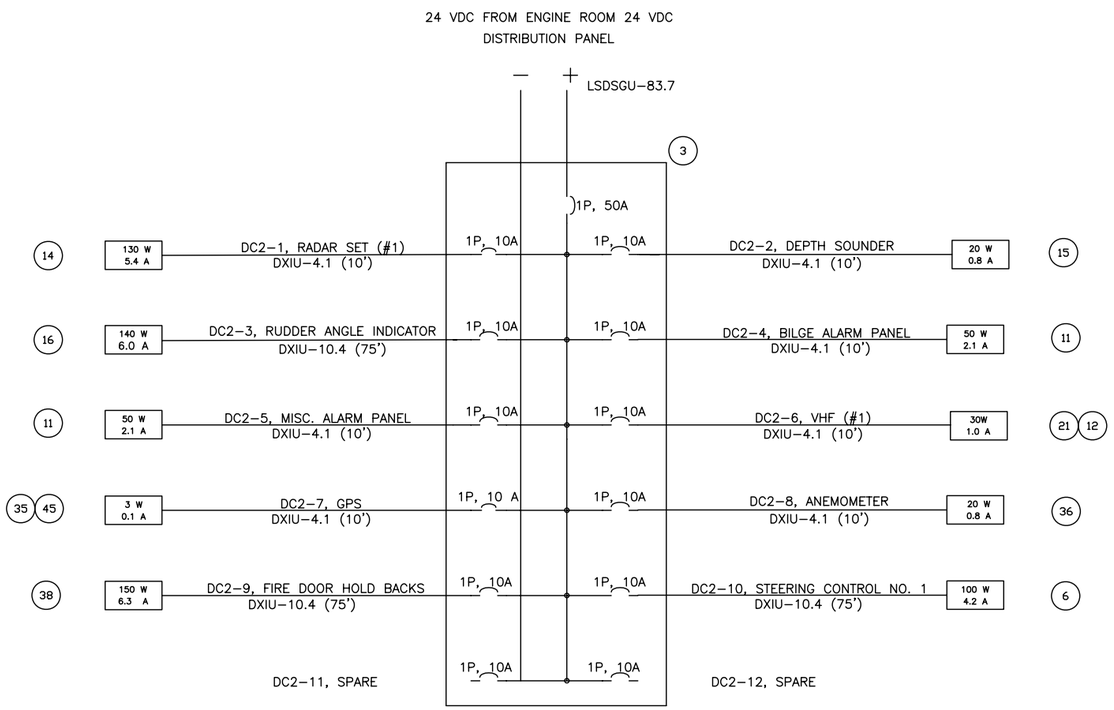

PILOT HOUSE ELECTRONICS PANEL DC 2

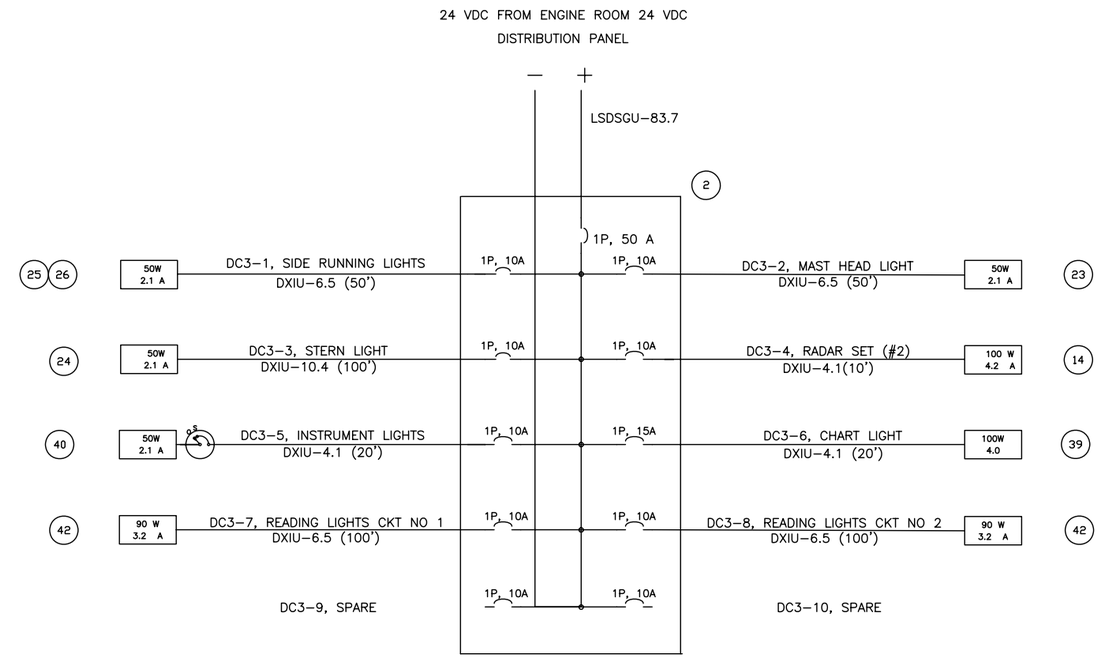

PILOT HOUSE NAVIGATION PANEL DC 3

SCALE AS STATED DIMS IN INCHES UNLESS OTHERWISE STATED	Seaworthy Systems, Inc. P.O. BOX 965 ESSEX, CT 06426 USA TEL: (860) 767–9061 FAX: (860) 767–1263	CASCO BAY LINES PO BOX 4656 PORTLAND, ME 04112	TITLE 399 PASSENGER FERRY 24VDC ELECTRICAL SYSTEM ONE LINE DIAGRAM DRG No. 283–32A–304 REV. – SHEET 3 OF 6 SSI FILE No. s:\active\projnumb\283–32\drafting\active\283–32A–304.dwg

DO NOT SCALE, IF IN DOUBT ASK

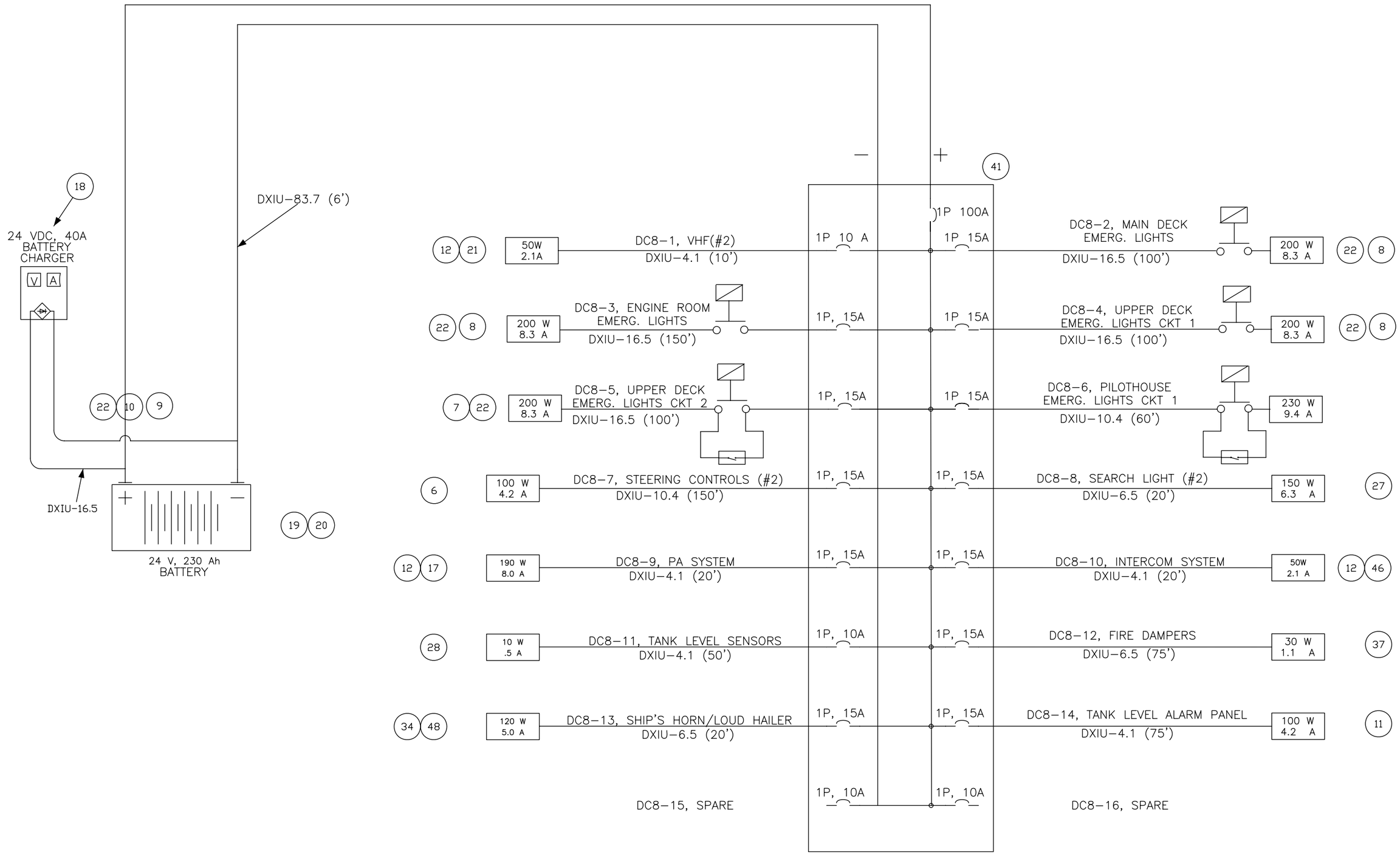

24 VDC EMERGENCY
LIGHTING PANEL DC 8

SCALE AS STATED DIMS IN INCHES UNLESS OTHERWISE STATED	Seaworthy Systems, Inc. P.O. BOX 965 ESSEX, CT 06426 USA TEL: (860) 767–9061 FAX: (860) 767–1263	CASCO BAY LINES PO BOX 4656 PORTLAND, ME 04112	TITLE 399 PASSENGER FERRY 24VDC ELECTRICAL SYSTEM ONE LINE DIAGRAM DRG No. 283–32A–304 REV. – SHEET 4 OF 6 SSI FILE No. e:\active\projnumb\283–32\drafting\active\283–32A–304.dwg

DO NOT SCALE, IF IN DOUBT ASK

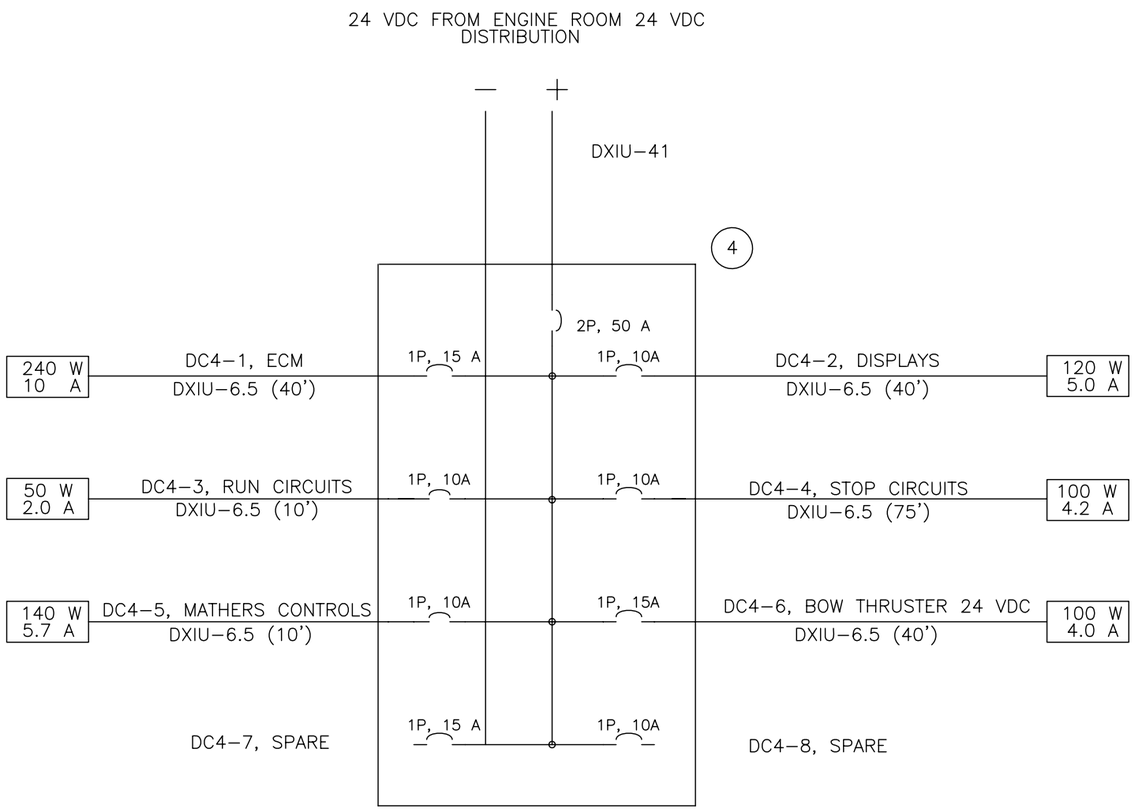

24 VDC STARBOARD ENGINE ELECTRONIC CONTROL PANEL DC 4

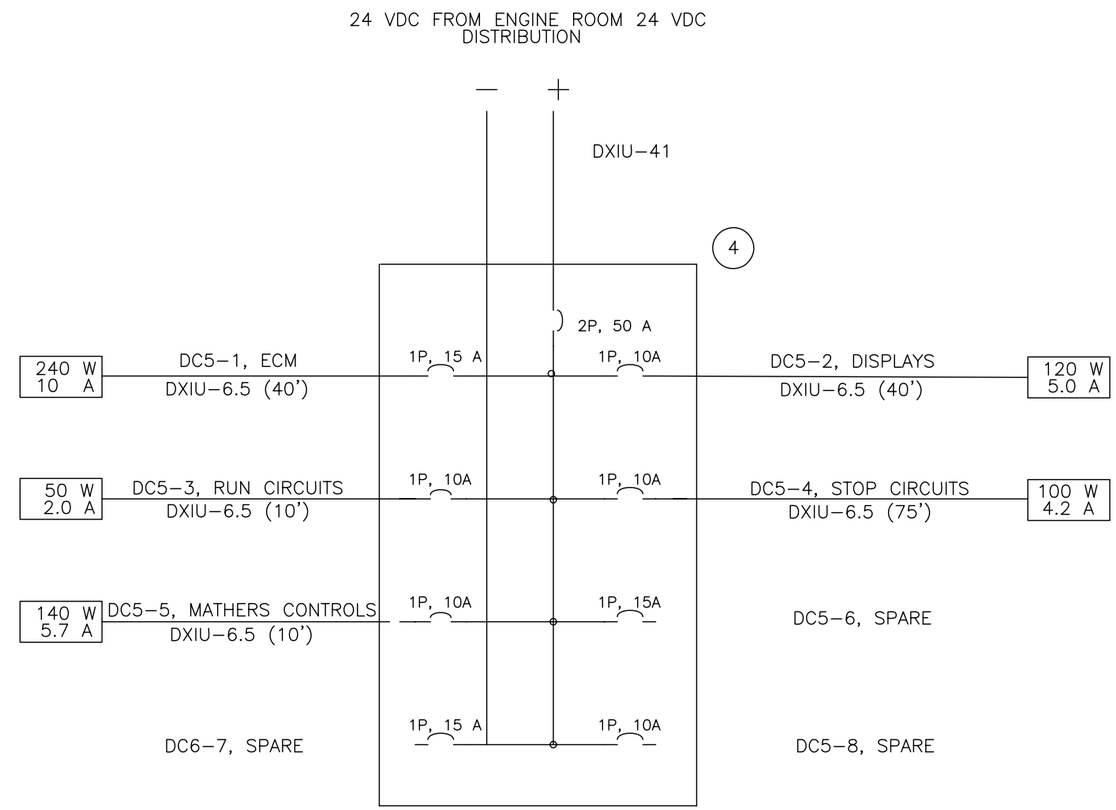

24 VDC PORT ENGINE ELECTRONIC CONTROL PANEL DC 5

SCALE AS STATED DIMS IN INCHES UNLESS OTHERWISE STATED	Seaworthy Systems, Inc. P.O. BOX 965 ESSEX, CT 06426 USA TEL: (860) 767–9061 FAX: (860) 767–1263	CASCO BAY LINES PO BOX 4656 PORTLAND, ME 04112	TITLE 399 PASSENGER FERRY 24VDC ELECTRICAL SYSTEM ONE LINE DIAGRAM DRG No. 283–32A–304 REV. – SHEET 5 OF 6 SSI FILE No. e:\active\projnumb\283–32\drafting\active\283–32A–304.dwg

DO NOT SCALE, IF IN DOUBT ASK

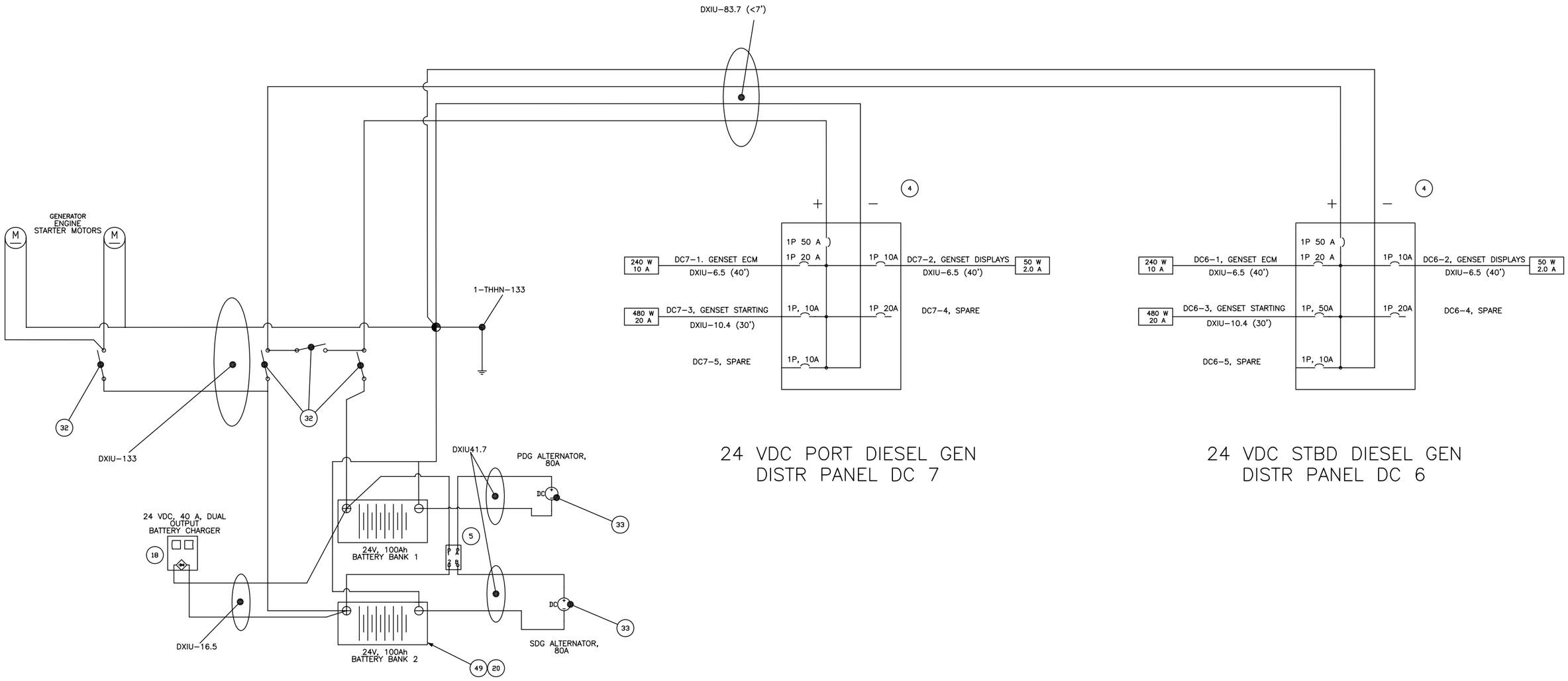

SCALE AS STATED DIMS IN INCHES UNLESS OTHERWISE STATED	Seaworthy Systems, Inc. P.O. BOX 965 ESSEX, CT 06426 USA TEL: (860) 767-9061 FAX: (860) 767-1263	CASCO BAY LINES PO BOX 4656 PORTLAND, ME 04112	TITLE 399 PASSENGER FERRY 24VDC ELECTRICAL SYSTEM ONE LINE DIAGRAM DRG No 283-32A-304 REV. — SHEET 6 OF 6 SSI FILE No. s:\active\projnumb\283-32\drafting\active\283-32A-304.dwg