STATE OF MAINE
DEPARTMENT OF TRANSPORTATION

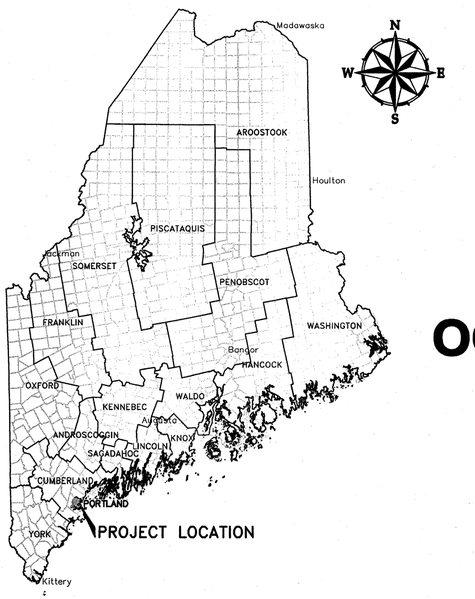

PROJECT LOCATION MAP

50 0 50 100
scale mile

CITY OF PORTLAND
CUMBERLAND COUNTY

OCEAN GATEWAY PIER 2 BERTH 2
PIN: 017832.00

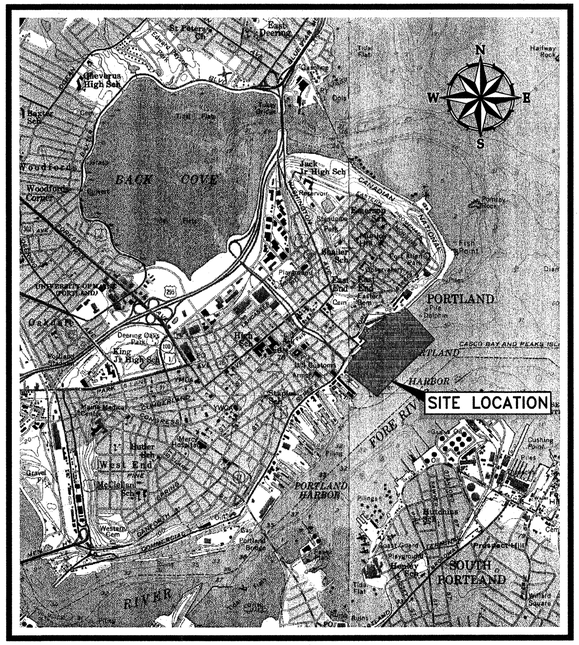

SOURCE: USGS TOPOGRAPHIC MAP

SITE LOCATION MAP

½ 0 ½ 1
scale mile

2000 0 2000 4000
scale feet

SHEET INDEX

GENERAL:
WOODARD & CURRAN INC.

SHEET	SHEET TITLE
G001	TITLE / INDEX SHEET

WATER/MARINE:
PND INCORPORATED, CONSULTING ENGINEERS

SHEET	SHEET TITLE
W001	MARINE / WATER COMPONENTS – GENERAL NOTES
W100 ALT	MARINE / WATER COMPONENTS – SITE PLAN
W400	MARINE / WATER COMPONENTS – PILE SCHEDULE
W401	MARINE / WATER COMPONENTS – PILE DETAILS
W100–D	MARINE / WATER COMPONENTS – DEMOLITION PLAN
W101–D	MARINE / WATER COMPONENTS – DEMOLITION DETAILS

PIER A

SHEET	SHEET TITLE
W102–A ALT	PIER A – DECK PANEL PLAN
W301–A	PIER A – DECK DETAILS
W307–A ALT	PIER A – PIER 2 BERTH 2 PIER A GANGWAY DETAILS

BERTH 2

SHEET	SHEET TITLE
W100–M ALT	PIER 2 BERTH 2 – SITE PLAN
W200–M ALT	PIER 2 BERTH 2 – ELEVATIONS
W300–M ALT	PIER 2 BERTH 2 – BREASTING DOLPHIN NO. 1
W301–M ALT	PIER 2 BERTH 2 – BD1 ACCESS RAMP
W302–M ALT	PIER 2 BERTH 2 – FENDER
W303–M ALT	PIER 2 BERTH 2 – MOORING DOLPHIN
W304–M ALT	PIER 2 BERTH 2 – DOLPHIN CONFIGURATIONS
W305–M ALT	PIER 2 BERTH 2 – FOAM FILLED MARINE FENDER
W306–M ALT	PIER 2 BERTH 2 – CATWALK
W307–M ALT	PIER 2 BERTH 2 – PIER B
W308–M ALT	PIER 2 BERTH 2 – PIER C

BERTH 2 (CONTINUED)

SHEET	SHEET TITLE
W309–M ALT	PIER 2 BERTH 2 – PEDESTRIAN GANGWAYS
W310–M ALT	PIER 2 BERTH 2 – PEDESTRIAN GANGWAY DETAILS
W311–M ALT	PIER 2 BERTH 2 – PEDESTRIAN GANGWAY 3
W312–M ALT	PIER 2 BERTH 2 – GANGWAY LANDING PLATFORM
W313–M ALT	PIER 2 BERTH 2 – FLOAT ACCESS RAMP
W314–M ALT	PIER 2 BERTH 2 – GANGWAY & ACCESS RAMP HANDRAIL DETAILS
W315–M ALT	PIER 2 BERTH 2 – FLOAT PLAN & ELEVATION
W316–M ALT	PIER 2 BERTH 2 – STRUCTURAL PLAN & ELEVATION
W317–M ALT	PIER 2 BERTH 2 – SECTIONS
W318–M ALT	PIER 2 BERTH 2 – DETAILS
W319–M ALT	PIER 2 BERTH 2 – DETAILS
W320–M ALT	PIER 2 BERTH 2 – PILE HOOPS
W321–M ALT	PIER 2 BERTH 2 – LADDER ACCESS PLATFORM
W322–M ALT	PIER 2 BERTH 2 – EXTENSION RAMP

STRUCTURAL:
MOORING PLATFORM
WOODARD & CURRAN INC.

SHEET	SHEET TITLE
S100–D	EXISTING MOORING PLATFORM BLDG DEMO AND RAILING PLAN
S101–D	EXISTING MOORING PLATFORM BLDG SECTION AND DETAILS

ELECTRICAL:
WOODARD & CURRAN INC.

SHEET	SHEET TITLE
E100	ELECTRICAL SITE PLAN

REFERENCE PLANS:

SHEET	SHEET TITLE
10051	DOLPHIN BLDG PLAN AND ELEVATIONS
10080	DOLPHIN BLDG RAISED ROOF AREA PLAN AND SECTION ELEVS.
R35	DRY DOCK MOORING PLATFORM I PLANS AND ELEVATIONS
R37	DRY DOCK MOORING PLATFORM I & II SECTIONS AND DETAILS

NOTE:

1. WATER / MARINE SHEETS CONTAINED HEREIN ORIGINATE FROM THE OCEAN GATEWAY PHASE 1 PROJECT, BID MAY 2005, WITH MINOR REVISIONS AND UPDATES AS NOTED BY MEANS OF REVISION CLOUDS AND REVISION REFERENCES. DISREGARD ALL REFERENCES TO "ALTERNATE" OR "ALT". ALL WORK STATED AS "ALTERNATE" OR "ALT" SHALL BE BID UNDER THE BASE BID ITEM(S) CONTAINED WITHIN THIS BID PACKAGE; THERE ARE NO ALTERNATE BID ITEMS CONTAINED WITHIN THIS BID PACKAGE.
2. SHEET NUMBERING FOR WATER / MARINE PLANS WAS DEVELOPED UNDER THE ORIGINAL OCEAN GATEWAY PHASE 1 PROJECT, BID MAY 2005, AND HAS NOT BEEN UPDATED FOR THIS BID PACKAGE. REFER TO SHEET INDEX LOCATED ON THIS SHEET FOR LIST OF ALL SHEETS INCLUDED WITHIN THIS BID PACKAGE.
3. FLOAT DESIGN SHEETS, INCLUDING W315–M ALT, W316–M ALT, W317–M ALT, W318–M ALT AND W319–M ALT, HAVE NOT BEEN REVISED OR UPDATED FROM THE ORIGINAL OCEAN GATEWAY PHASE 1 PROJECT, BID MAY 2005, AND THEREFORE CONTAIN TITLEBLOCK INFORMATION (PROJECT TITLE, DATES, PLAN SET NUMBERING) INCONSISTENT WITH THE OTHER SHEETS CONTAINED IN THIS BID PACKAGE.

DISCIPLINE CODES
SHEET NUMBER PREFIXES

E	ELECTRICAL
G	GENERAL
S	STRUCTURAL
W	WATER/MARINE

DESIGN ELEMENT CODES
SHEET NUMBER SUFFIXES

A	PIER A
M	PIER 2 BERTH 2
D	DEMOLITION

W310-M ALT

DISCIPLINE CODE (SHEET NUMBER PREFIX)

DESIGN ELEMENT CODE (SHEET NUMBER SUFFIX)

DISREGARD REFERENCE (REFERS TO ORIGINAL BID OF OCEAN GATEWAY PHASE 1 BID DOCUMENTS, 2005)

STATE OF MAINE
DEPARTMENT OF TRANSPORTATION

APPROVED

	DATE
COMMISSIONER:	7/1/10
CHIEF ENGINEER:	7/1/10

STATE OF MAINE BARRY E. BRUNT 9708 PROFESSIONAL ENGINEER

SIGNATURE	
9708	P.E. NUMBER
06/08/10	DATE

PROJECT INFORMATION

PROGRAM	MULTIMODAL
PROJECT MANAGER	PAUL POTTLE
DESIGNER	
CONSULTANT	WOODARD & CURRAN INC.
PROJECT RESIDENT	
CONTRACTOR	
PROJECT COMPLETION DATE	

CITY OF PORTLAND
OCEAN GATEWAY PIER 2 BERTH 2

TITLE / INDEX SHEET

G001

Filename: \\Portland\Projects\12234485 Ocean Gateway P2B2\01 Design\Deliverables\2010.06.08 ACAD Bid Documents to Fil\20348802-G001.dwg, Jun 28, 2010 - 2:34pm

GENERAL NOTES

CODES

1. American Association of State Highway and Transportation Officials. "Standard Specifications for Highway Bridges (AASHTO)", 16th Edition
2. The BOCA National Building Code / 1999
3. American Institute of Steel Construction (AISC), "Steel Construction Manual", 9th Edition
4. American Welding Society (AWS) D1.1, "Structural Welding Code – Steel", Current Edition
5. American Welding Society (AWS) D1.2, "Structural Welding Code – Aluminum", Current Edition
6. American Welding Society (AWS) D1.5, "Bridge Welding Code", Current Edition
7. American Concrete Institute (ACI) 318–02, "Building Code Requirements for Structural Concrete"

DESIGN CRITERIA

DEAD LOAD: Weight of all materials of construction

LIVE LOAD:

Roll–On / Roll–Off Ramp:
- Live: 50 psf uniform load
- Truck: HS20–44 (two lanes)
  HS25–44 (one lane)

Pier A
- Live: 250 psf
- Truck: HS25–44 at turn around portion only.
- Building: Column Reactions (see Architectural General Notes)

Pier 2 Berth 2

Operational Live:

Catwalks and Landings	– 60 psf
Gangways	– 100 psf
Float	– 100 psf

Non–Operational Live:

Catwalks and Landings	– 20 psf
Gangways	– 20 psf
Float	– 20 psf

SNOW LOADS:

Roll–On / Roll–Off Ramp:
- Snow: 60 psf (ground snow)

Operational Restriction: No snow load on Ramp during operation

Pier A
- Snow: 60 psf (ground snow)
- Building: Column Reactions (see Architectural General Notes)

Pier 2 Berth 2
- Snow: 60 psf (ground snow)

Operational Restriction: No snow load on Catwalks, Landings, Gangways or Float during operation

LATERAL LOADS:

Roll–On / Roll–Off Ramp (AASHTO):
- Wind: Ramp – 300 lb / ft
- Current: 1 knot broadside to float

Seismic (abutment only):

Acceleration Coefficient	– A = 0.10
Seismic Performance Category	– SPC = C

Pier 2 Fenders
- Wind: Operational Wind to Vessel: 60 mph reduced to 5–min Wind
- Current: 1 knot broadside to vessel

Berthing (Accidental Impact at Fender System):

Vessel Type:	Scotia Prince (8,200 DT)
Approach Speed:	3.4 ft/sec
Approach Angle:	10 degrees
Kinetic Energy:	32 k–ft (Vessel contacts two fenders simultaneously)
Maximum Reaction at Fender:	42 k

Pier A
- Wind: Design Wind to Structure: 85 mph
  Building Column Reactions (see Architectural General Notes)

Seismic:

Acceleration Coefficient	– A = 0.10
Seismic Performance Category	– SPC = C

Building Column Reactions (see Architectural General Notes)

Pier 2 Berth 2

Wind: Operational Wind to Structure:	60 mph
Operational Wind to Vessel & Float:	60 mph reduced to 5–min Wind
Non–Operational Wind to Structure:	85 mph
Non–Operational Wind to Float:	85 mph reduced to 5–min Wind

- Current: 1 knot broadside to Float

Seismic (Gangway Piers only)

Acceleration Coefficient	– A = 0.10
Seismic Performance Category	– SPC = C

Berthing (Accidental Impact at Fender System):

Vessel Type:	Cruise Vessel (80,000 DT)
Approach Speed:	3 ft/sec
Approach Angle:	10 degrees
Kinetic Energy:	220 k–ft
Maximum Reaction at Fender:	210 k

Mooring: 300 kips net line pull at the following angles: H=45°, V1=30°, V2=30° 1

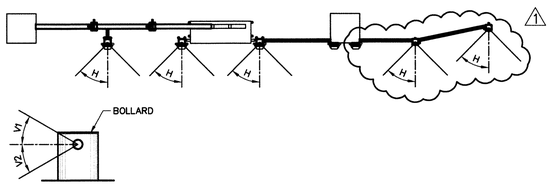

P | N | D ENGINEERS, INC.
811 First Avenue, Suite 570
Seattle, Washington 98104
Phone: 206-624-1387
Fax: 206-624-1388
mail@pndengineers.com

STATE OF MAINE
DEPARTMENT OF TRANSPORTATION

PROJECT NUMBER 017812.00

PIN 017812.00

STATE OF MAINE — DAVID M. PEDICE 9437 — REGISTERED PROFESSIONAL ENGINEER

PROJ. MANAGER	PAUL POTTLE		
DESIGN–DETAILED	TWB	DH	09/01/04
CHECKED–REVIEWED	RJ	DP	09/01/04
DESIGN2–DETAILED2			
DESIGN3–DETAILED3			
REVISIONS 1	P282–REBID 2010		06/08/10
REVISIONS 2			
REVISIONS 3			
REVISIONS 4			
FIELD CHANGES			

SIGNATURE 9437

P.E. NUMBER

6/8/10

DATE

CITY OF PORTLAND
OCEAN GATEWAY PIER 2 BERTH 2

MARINE/WATER COMPONENTS
GENERAL NOTES

W001

9/14/04
Filename: Drawings\2010\104040.01 - Ocean Gateway Pier 2 Berth 2\100% Review\20343802-W001-100.dwg

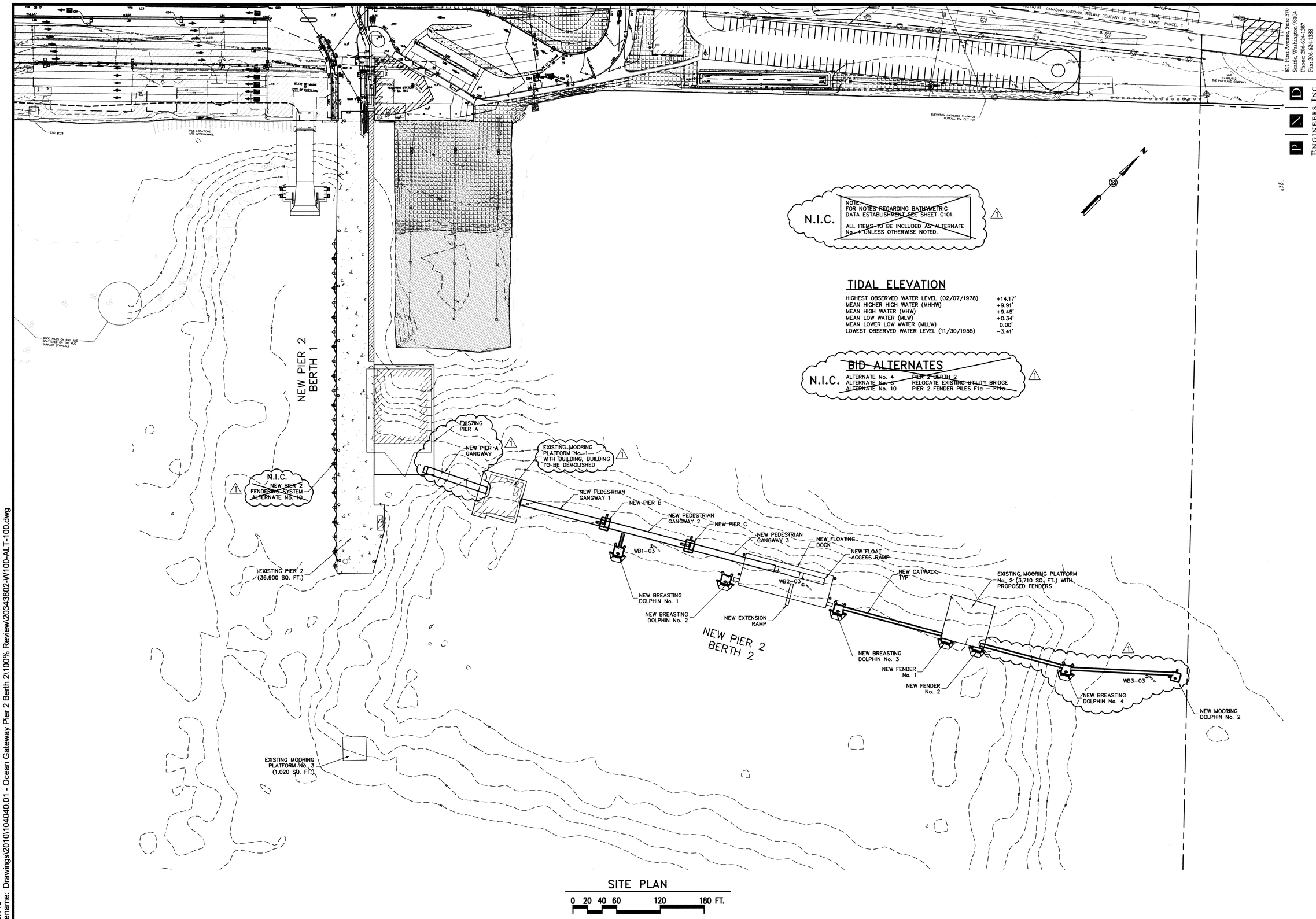

TIDAL ELEVATION

HIGHEST OBSERVED WATER LEVEL (02/07/1978)	+14.17'
MEAN HIGHER HIGH WATER (MHHW)	+9.91'
MEAN HIGH WATER (MHW)	+9.45'
MEAN LOW WATER (MLW)	+0.34'
MEAN LOWER LOW WATER (MLLW)	0.00'
LOWEST OBSERVED WATER LEVEL (11/30/1955)	-3.41'

~~BID ALTERNATES~~

N.I.C.

ALTERNATE No. 4	PIER 2 BERTH 2
ALTERNATE No. 8	RELOCATE EXISTING UTILITY BRIDGE
ALTERNATE No. 10	PIER 2 FENDER PILES F1a – F11a

P | N | D ENGINEERS, INC.
811 First Avenue, Suite 570
Seattle, Washington 98104
Phone: 206-624-1387
Fax: 206-624-1388
mail@pndengineers.com

STATE OF MAINE
DEPARTMENT OF TRANSPORTATION

PROJECT NUMBER 017812.00

PIN 017812.00

STATE OF MAINE
DAVID M. PEDICE
9437
LICENSED
PROFESSIONAL ENGINEER

SIGNATURE	9437		
P.E. NUMBER			
DATE	6/8/10		

PROJ. MANAGER	PAUL POTTLE		
DESIGN-DETAILED	TWB	DH	09/01/04
CHECKED-REVIEWED	RJ	DP	09/01/04
DESIGN2-DETAILED2			
DESIGN3-DETAILED3			
REVISIONS 1	P282-REBID 2010		06/08/10
REVISIONS 2			
REVISIONS 3			
REVISIONS 4			
FIELD CHANGES			

CITY OF PORTLAND
OCEAN GATEWAY PIER 2 BERTH 2

MARINE/WATER COMPONENTS
SITE PLAN

W100
ALT.

5/27/10
Filename: Drawings\2010\104040.01 - Ocean Gateway Pier 2 Berth 2\100% Review\20343802-W100-ALT-100.dwg

PILE SCHEDULE

N.I.C. PIER A

LOCATION		BATTER	PILE DIAMETER (IN)	WALL THICKNESS (IN)	PILE TIP	PILE LENGTH (FT)	UNCOATED LENGTH (FT)	ULTIMATE PILE CAPACITY TENSION (KIPS)	ULTIMATE PILE CAPACITY COMPRESSION (KIPS)
DOCK PILES	A3.1	VERTICAL	24	0.500	SPIN FIN W/ OPEN SHOE	180	60	100	600
	A3.1B	2 TO 1	24	0.500	SPIN FIN W/ OPEN SHOE	200	60	200	200
	A4.5	VERTICAL	24	0.500	SPIN FIN W/ OPEN SHOE	200	60	--	1000
	A7.0	VERTICAL	24	0.500	SPIN FIN W/ OPEN SHOE	200	60	--	1000
	A9.1	VERTICAL	24	0.500	CONICAL	200	60	--	600
	A12.3	VERTICAL	24	0.500	CONICAL	200	60	--	600
	C3.1	VERTICAL	24	0.500	SPIN FIN W/ OPEN SHOE	180	60	100	1200
	C3.1B	2 TO 1	24	0.500	SPIN FIN W/ OPEN SHOE	200	60	200	200
	C4.5	VERTICAL	24	0.500	CONICAL	200	60	--	1400
	C7.0	VERTICAL	24	0.500	CONICAL	200	60	--	1200
	C9.1	VERTICAL	24	0.500	CONICAL	200	60	--	1200
	C12.3	VERTICAL	24	0.500	CONICAL	200	60	--	600
	D3.1	VERTICAL	24	0.500	SPIN FIN W/ OPEN SHOE	180	60	100	1600
	D3.1B	2 TO 1	24	0.500	SPIN FIN W/ OPEN SHOE	180	60	200	200
	D4.5	VERTICAL	24	0.500	CONICAL	180	60	--	1600
	D7.0	VERTICAL	24	0.500	CONICAL	180	60	--	1000
	D9.1	VERTICAL	24	0.500	CONICAL	180	60	--	1600
	D12.3	VERTICAL	24	0.500	CONICAL	180	60	--	600
	E3.1	VERTICAL	24	0.500	SPIN FIN W/ OPEN SHOE	160	60	100	1000
	E3.1B	2 TO 1	24	0.500	SPIN FIN W/ OPEN SHOE	180	60	200	200
	E4.5	VERTICAL	24	0.500	CONICAL	180	60	--	1400
	E7.0	VERTICAL	24	0.500	CONICAL	180	60	--	1000
	E9.1	VERTICAL	24	0.500	CONICAL	180	60	--	1400
	E12.3	VERTICAL	24	0.500	CONICAL	180	60	--	600
	F3.1	VERTICAL	24	0.500	SPIN FIN W/ OPEN SHOE	160	60	100	1000
	F3.1B	2 TO 1	24	0.500	SPIN FIN W/ OPEN SHOE	160	60	200	200
	F4.5	VERTICAL	24	0.500	CONICAL	180	60	--	1200
	F7.0	VERTICAL	24	0.500	CONICAL	180	60	--	1200
	F9.1	VERTICAL	24	0.500	CONICAL	180	60	--	1600
	F12.3	VERTICAL	24	0.500	CONICAL	180	60	--	1000
	G3.1	VERTICAL	24	0.500	SPIN FIN W/ OPEN SHOE	140	40	50	1000
	G3.1B	2 TO 1	24	0.500	SPIN FIN W/ OPEN SHOE	160	40	200	200
	G4.5	VERTICAL	24	0.500	SPIN FIN W/ OPEN SHOE	140	40	50	1000
	G4.5B	2 TO 1	24	0.500	SPIN FIN W/ OPEN SHOE	160	40	200	200
	G7.0	VERTICAL	24	0.500	SPIN FIN W/ OPEN SHOE	140	40	50	1000
	G7.0B	2 TO 1	24	0.500	SPIN FIN W/ OPEN SHOE	160	40	200	200
	G9.1	VERTICAL	24	0.500	SPIN FIN W/ OPEN SHOE	140	40	50	1600
	G9.1B	2 TO 1	24	0.500	SPIN FIN W/ OPEN SHOE	160	40	200	200
	G12.3	VERTICAL	24	0.500	SPIN FIN W/ OPEN SHOE	140	40	50	1000
	G12.3B	2 TO 1	24	0.500	SPIN FIN W/ OPEN SHOE	160	40	200	200

IN ADDITION TO THE PILE LENGTHS STATED ABOVE THE FOLLOWING NUMBER OF PILES SHALL BE SUPPLIED THAT ARE COATED AND MATCH THE PILE SPECIFICATIONS:
(10) 20 FOOT LENGTHS OF 24"ø x 0.500"t PIPE

N.I.C. PIER 2 FENDERS

LOCATION		BATTER	PILE DIAMETER (IN)	WALL THICKNESS (IN)	PILE TIP	PILE LENGTH (FT)	UNCOATED LENGTH (FT)	ULTIMATE PILE CAPACITY TENSION (KIPS)	ULTIMATE PILE CAPACITY COMPRESSION (KIPS)
PIER 2 FENDERS	F1	VERTICAL	30	0.375	CONICAL	100	20	---	100
	F2	VERTICAL	30	0.375	CONICAL	100	20	---	100
	F3	VERTICAL	30	0.375	CONICAL	100	20	---	100
	F4	VERTICAL	30	0.375	CONICAL	100	20	---	100
	F5	VERTICAL	30	0.375	CONICAL	100	20	---	100
	F6	VERTICAL	30	0.375	CONICAL	100	20	---	100
	F7	VERTICAL	30	0.375	CONICAL	100	20	---	100
	F8	VERTICAL	30	0.375	CONICAL	100	20	---	100
	F9	VERTICAL	30	0.375	CONICAL	100	20	---	100
	F10	VERTICAL	30	0.375	CONICAL	100	20	---	100
	F11	VERTICAL	30	0.375	CONICAL	100	20	---	100
	F12	VERTICAL	30	0.375	CONICAL	100	20	---	100
PIER 2 FENDERS ALTERNATE No. 10	F1a	VERTICAL	30	0.375	CONICAL	100	20	---	100
	F2a	VERTICAL	30	0.375	CONICAL	100	20	---	100
	F3a	VERTICAL	30	0.375	CONICAL	100	20	---	100
	F4a	VERTICAL	30	0.375	CONICAL	100	20	---	100
	F5a	VERTICAL	30	0.375	CONICAL	100	20	---	100
	F6a	VERTICAL	30	0.375	CONICAL	100	20	---	100
	F7a	VERTICAL	30	0.375	CONICAL	100	20	---	100
	F8a	VERTICAL	30	0.375	CONICAL	100	20	---	100
	F9a	VERTICAL	30	0.375	CONICAL	100	20	---	100
	F10a	VERTICAL	30	0.375	CONICAL	100	20	---	100
	F11a	VERTICAL	30	0.375	CONICAL	100	20	---	100

PIER 2 BERTH 2 - ALTERNATE No. 4

LOCATION		BATTER	PILE DIAMETER (IN)	WALL THICKNESS (IN)	PILE TIP	PILE LENGTH (FT)	UNCOATED LENGTH (FT)	ULTIMATE PILE DRIVING CAPACITY TENSION (KIPS)	ULTIMATE PILE DRIVING CAPACITY COMPRESSION (KIPS)
BREASTING DOLPHIN No.1	VERTICAL	VERTICAL	30	0.500	SPIN FIN W/ OPEN SHOE	200	60	1300	1200
	BATTER (E)	2 TO 1	30	0.500	SPIN FIN W/ OPEN SHOE	220	60	1500	1000
	BATTER (W)	2 TO 1	30	0.500	SPIN FIN W/ OPEN SHOE	220	60	1500	1000
	FENDER	VERTICAL	18	0.500	CONICAL	100	20	---	50
	FENDER	VERTICAL	18	0.500	CONICAL	100	20	---	50
	FENDER	VERTICAL	18	0.500	CONICAL	100	20	---	50
	FENDER	VERTICAL	18	0.500	CONICAL	100	20	---	50
	FENDER MOORING	VERTICAL	18	0.500	CONICAL	100	20	---	50
	FENDER MOORING	VERTICAL	18	0.500	CONICAL	100	20	---	50
BREASTING DOLPHIN No.2	VERTICAL	VERTICAL	30	0.500	SPIN FIN W/ OPEN SHOE	180	60	1300	1200
	BATTER (E)	2 TO 1	30	0.500	SPIN FIN W/ OPEN SHOE	200	60	1500	1000
	BATTER (W)	2 TO 1	30	0.500	SPIN FIN W/ OPEN SHOE	200	60	1500	1000
	FENDER	VERTICAL	18	0.500	CONICAL	100	20	---	50
	FENDER	VERTICAL	18	0.500	CONICAL	100	20	---	50
	FENDER	VERTICAL	18	0.500	CONICAL	100	20	---	50
	FENDER	VERTICAL	18	0.500	CONICAL	100	20	---	50
	FENDER MOORING	VERTICAL	18	0.500	CONICAL	100	20	---	50
	FENDER MOORING	VERTICAL	18	0.500	CONICAL	100	20	---	50
BREASTING DOLPHIN No.3 AND No.4	VERTICAL	VERTICAL	30	0.500	SPIN FIN W/ OPEN SHOE	160	60	1300	1200
	BATTER (E)	2 TO 1	30	0.500	SPIN FIN W/ OPEN SHOE	180	60	1500	1000
	BATTER (W)	2 TO 1	30	0.500	SPIN FIN W/ OPEN SHOE	180	60	1500	1000
	FENDER	VERTICAL	18	0.500	CONICAL	100	20	---	50
	FENDER	VERTICAL	18	0.500	CONICAL	100	20	---	50
	FENDER	VERTICAL	18	0.500	CONICAL	100	20	---	50
	FENDER	VERTICAL	18	0.500	CONICAL	100	20	---	50
	FENDER MOORING	VERTICAL	18	0.500	CONICAL	100	20	---	50
	FENDER MOORING	VERTICAL	18	0.500	CONICAL	100	20	---	50
FENDER NO. 1	FENDER	VERTICAL	18	0.500	CONICAL	100	20	---	50
	FENDER	VERTICAL	18	0.500	CONICAL	100	20	---	50
	FENDER	VERTICAL	18	0.500	CONICAL	100	20	---	50
	FENDER	VERTICAL	18	0.500	CONICAL	100	20	---	50
	FENDER MOORING	VERTICAL	18	0.500	CONICAL	100	20	---	50
	FENDER MOORING	VERTICAL	18	0.500	CONICAL	100	20	---	50
FENDER NO. 2	FENDER	VERTICAL	18	0.500	CONICAL	100	20	---	50
	FENDER	VERTICAL	18	0.500	CONICAL	100	20	---	50
	FENDER	VERTICAL	18	0.500	CONICAL	100	20	---	50
	FENDER	VERTICAL	18	0.500	CONICAL	100	20	---	50
	FENDER MOORING	VERTICAL	18	0.500	CONICAL	100	20	---	50
	FENDER MOORING	VERTICAL	18	0.500	CONICAL	100	20	---	50
N.I.C. MOORING DOLPHIN No.1	VERTICAL	VERTICAL	24	0.750	SPIN FIN W/ OPEN SHOE	160	60	1600	2400
	BATTER (N)	2 TO 1	24	0.500	SPIN FIN W/ OPEN SHOE	180	60	1300	1300
	BATTER (E)	2TO 1	24	0.500	SPIN FIN W/ OPEN SHOE	180	60	1300	1300
MOORING DOLPHIN No.2	VERTICAL	VERTICAL	24	0.750	SPIN FIN W/ OPEN SHOE	160	60	1600	1200
	BATTER (N)	2 TO 1	24	0.500	SPIN FIN W/ OPEN SHOE	180	60	1300	1000
	BATTER (W)	2 TO 1	24	0.500	SPIN FIN W/ OPEN SHOE	180	60	1300	1000
PIER B	VERTICAL	VERTICAL	24	0.500	CONICAL	200	60	---	550
	BATTER (N)	2 TO 1	24	0.500	CONICAL	220	60	150	150
	BATTER (W)	2 TO 1	24	0.500	CONICAL	220	60	150	150
PIER C	VERTICAL	VERTICAL	24	0.500	CONICAL	200	60	---	550
	BATTER (N)	2 TO 1	24	0.500	CONICAL	220	60	150	150
	BATTER (W)	2 TO 1	24	0.500	CONICAL	220	60	150	150
FLOAT PILES	NE	VERTICAL	30	0.500	CONICAL	160	60	---	200
	NW	VERTICAL	30	0.500	CONICAL	180	60	---	200
	SE	VERTICAL	30	0.500	CONICAL	160	60	---	200
	SW	VERTICAL	30	0.500	CONICAL	180	60	---	200

IN ADDITION TO THE PILE LENGTHS STATED ABOVE THE FOLLOWING NUMBER OF PILES SHALL BE SUPPLIED THAT ARE COATED AND MATCH THE PILE SPECIFICATIONS:
(4) 20 FOOT LENGTHS OF 24"ø x 0.500"t PIPE
(4) 20 FOOT LENGTHS OF 30"ø x 0.500"t PIPE

N.I.C. RO-RO RAMP

LOCATION		BATTER	PILE DIAMETER (IN)	WALL THICKNESS (IN)	PILE TIP	PILE LENGTH (FT)	UNCOATED LENGTH (FT)	ULTIMATE PILE CAPACITY TENSION (KIPS)	ULTIMATE PILE CAPACITY COMPRESSION (KIPS)
FLOAT PILES	RF1	VERTICAL	24	0.500	CONICAL	160	40	---	200
	RF2	VERTICAL	24	0.500	CONICAL	160	40	---	200
	RF3	VERTICAL	24	0.500	CONICAL	160	40	---	200
	RF4	VERTICAL	24	0.500	CONICAL	160	40	---	200
APPROACH DOCK PILES	R1	VERTICAL	24	0.500	CONICAL	140	40	---	200
	R2	VERTICAL	24	0.500	CONICAL	140	40	---	500
	R3	VERTICAL	24	0.500	CONICAL	140	40	---	200
	R4	VERTICAL	24	0.500	CONICAL	140	40	---	250
	R5	VERTICAL	24	0.500	CONICAL	140	40	---	250
	R6	VERTICAL	24	0.500	CONICAL	140	40	---	250
	R7	VERTICAL	24	0.500	CONICAL	140	40	---	250

1

P N D ENGINEERS, INC.
811 First Avenue, Suite 570
Seattle, Washington 98104
Phone: 206-624-1387
Fax: 206-624-1388
mail@pndengineers.com

STATE OF MAINE
DEPARTMENT OF TRANSPORTATION

PROJECT NUMBER 017812.00

PIN 017812.00

STATE OF MAINE DAVID M. PEDE 9437 REGISTERED PROFESSIONAL ENGINEER

SIGNATURE		
P.E. NUMBER 9437		
DATE 6/9/10		

PROJ. MANAGER PAUL POTTLE			
DESIGN-DETAILED	RJJ	DH	09/01/04
CHECKED-REVIEWED	DT	DP	09/01/04
DESIGN2-DETAILED2			
DESIGN3-DETAILED3			
REVISIONS 1	P282-REBID 2010		06/08/10
REVISIONS 2			
REVISIONS 3			
REVISIONS 4			
FIELD CHANGES			

CITY OF PORTLAND
OCEAN GATEWAY PIER 2 BERTH 2

MARINE/WATER COMPONENTS
PILE SCHEDULE

W400

5/27/10
Filename: Drawings\2010\104040.01 - Ocean Gateway Pier 2 Berth 2\100% Review\20343802-W400-100.dwg

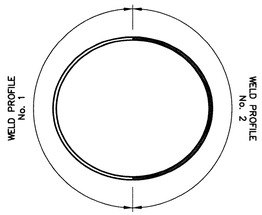

PLAN

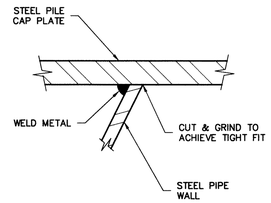

WELD PROFILE No. 1

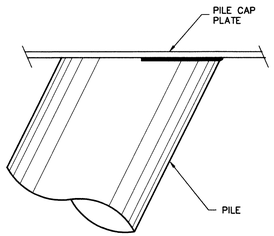

ELEVATION

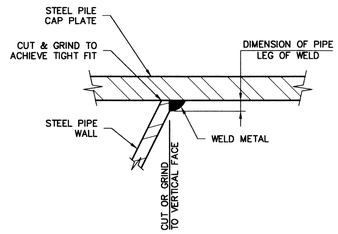

WELD PROFILE No. 2

1 BATTER PILE WELD
N.T.S.

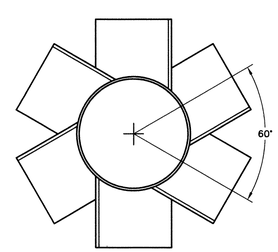

SECTION A
6 FINS FOR 24"ø PILES
N.T.S

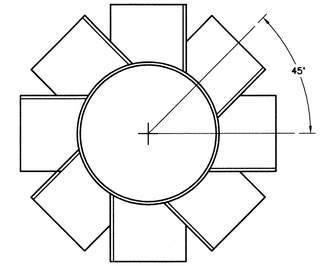

SECTION A
8 FINS FOR 30"ø PILES
N.T.S.

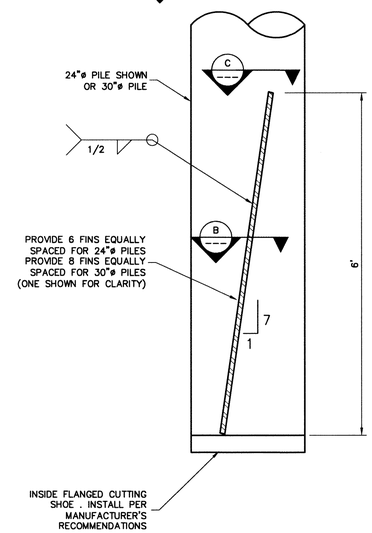

SPIN-FIN TIP
N.T.S.

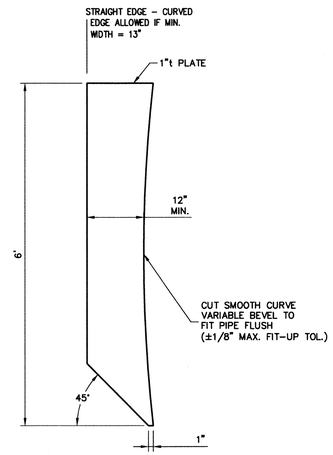

FIN DETAIL
N.T.S.

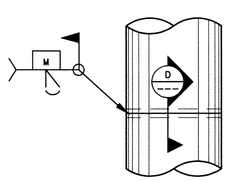

PILE SPLICE
TYPICAL FOR ALL FIELD PIPE PILE SPLICES (SHOP WELDS, SIMILAR)
N.T.S.

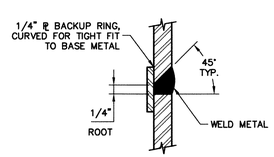

SECTION D
N.T.S.

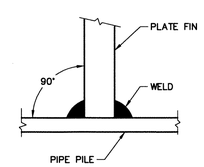

SECTION B
N.T.S.

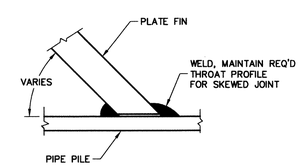

SECTION C
N.T.S.

811 First Avenue, Suite 570
Seattle, Washington 98104
Phone: 206-624-1387
Fax: 206-624-1388
mail@pndengineers.com
PND ENGINEERS, INC.

STATE OF MAINE
DEPARTMENT OF TRANSPORTATION

PROJECT NUMBER 017812.00

PIN 017812.00

STATE OF MAINE DAVID M. PIERCE 9437 REGISTERED PROFESSIONAL ENGINEER

SIGNATURE 9437			
P.E. NUMBER			
DATE 6/8/10			

PROJ. MANAGER	PAUL POTTLE		
DESIGN-DETAILED	RJ	DH	09/01/04
CHECKED-REVIEWED	OT	DP	09/01/04
DESIGN2-DETAILED2			
DESIGN3-DETAILED3	P282-REBID 2010		06/08/10
REVISIONS 1			
REVISIONS 2			
REVISIONS 3			
REVISIONS 4			
FIELD CHANGES			

CITY OF PORTLAND
OCEAN GATEWAY PIER 2 BERTH 2

MARINE/WATER COMPONENTS
PILE DETAILS

W401

9/30/04
Filename: Drawings\2010\104040.01 - Ocean Gateway Pier 2 Berth 2\100% Review\20343802-W401-100.dwg

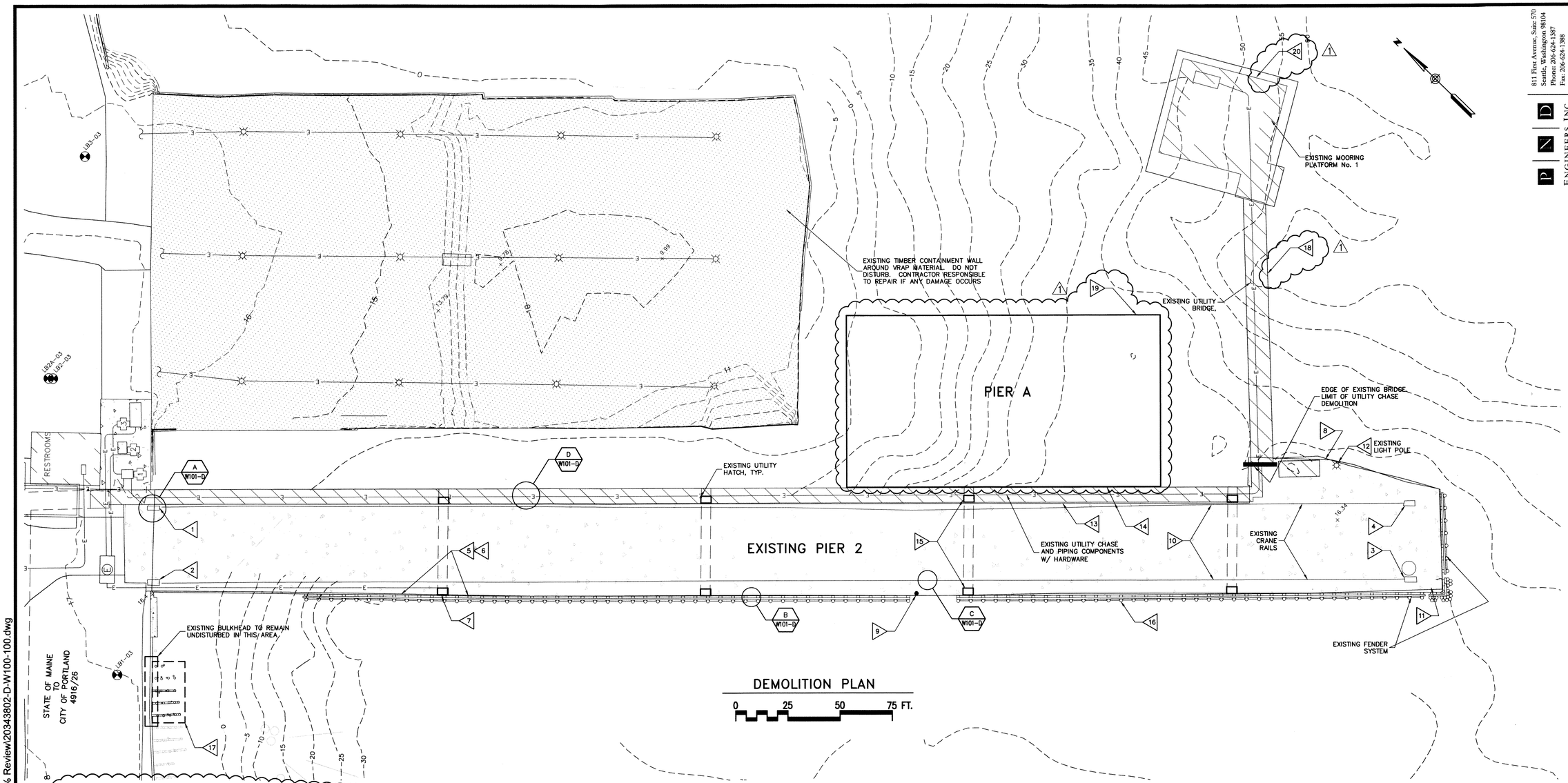

DEMOLITION PLAN

0 25 50 75 FT.

N.I.C.

TASK NO.	SCOPE OF WORK
1 THRU 4	REMOVE CRANE RAIL STOPS. SEE DETAIL A/W101-D FOR FINAL FINISH.
5 THRU 6	REMOVE MISCELLANEOUS PLATES AND BOLTS. SEE DETAILS ON W101-D FOR FINAL FINISH
7 THRU 8	REMOVE HANDRAIL IN ITS ENTIRETY. THIS INCLUDES RAILS FROM BEGINNING OF DOCK ALONG THE WESTERN FACE AND AROUND THE END TO THE UTILITY BRIDGE. SEE DETAIL B/W101-D FOR FINAL FINISH.
9	REMOVE MOORING PLATE. SEE DETAIL A/W101-D FOR SIMILAR FINAL FINISH.
10	REMOVE CRANE RAILS ON BOTH SIDES IN THEIR ENTIRETY. SEE DETAIL C/W101-D FOR FINAL FINISH.
11	REMOVE ALL PLATES AND ATTACHED ITEMS OF PREVIOUS MOORING POINT. THIS INCLUDES GUARD MATERIAL AT THE EDGE OF DOCK FACE. SEE DETAIL A & B/W101-D FOR FINAL FINISH.
12	REMOVE LIGHT POLE. SEE DETAIL B/W101-D FOR FINAL FINISH.
13	REMOVE UTILITY SHED AND ALL UTILITIES RESIDING IN OR ATTACHED TO THE DOCK. THIS INCLUDES METER, BOXES, PANEL BOARDS, INSULATION, ROOFING, SIDING, FRAMES, ETC.
14	REMOVE CURBS AND PATCH TO FINISH FLOOR. SEE DETAIL D/W101-D FOR FINAL FINISH.
15	REMOVE ALL UTILITIES AND ENCLOSURES AND PROVIDE UTILITY CHASE COVER OVER EXISTING UTILITY OPENINGS. COVER SHALL BE SKID RESISTANT AND HAVE A HS25 RATED CAPACITY. ALL HARDWARE SHALL BE STAINLESS STEEL. COVER SHALL HAVE A WEATHER TIGHT SEAL. FIELD VERIFY SIZE. SUBMIT PRODUCT CUT SHEET TO ENGINEER FOR APPROVAL.
16	CUT OFF EXISTING FENDER PILES BELOW MUDLINE WITH THE EXCEPTION OF 28 CCA PILES THAT SHOULD BE PULLED (IDENTIFIED BY DEPARTMENT). THIS INCLUDES FENDER PILES AND DEMOLISHING ASSOCIATED CONNECTIONS, BLOCKING, ETC. ALONG THE WEST AND SOUTH PORTION OF DOCK. REMOVE AND DISPOSE OF CUTOFFS, MISC. TIMBERS, ETC.
17	CUT OFF EXISTING PILES IN THIS AREA BELOW MUDLINE, WITH THE EXCEPTION OF ANY PILE WITHIN A THREE FOOT DIAMETER CIRCLE OF THE CENTERLINE OF A NEW PILE SHALL BE PULLED COMPLETELY.

NOTE:

1. SEE PROJECT MANUAL APPENDIX FOR SITE PHOTOS CORRESPONDING TO TASK NUMBERS.
2. SEE PIER 2 EXISTING CONDITIONS PLANS R24-R34 WHICH PROVIDE ASSUMED BACKGROUND INFORMATION. THESE ARE TO BE CONSIDERED INFORMATIONAL ONLY AND NOT TO BE CONSIDERED ACTUAL AS-BUILTS. THERE IS NO EVIDENCE THAT VERIFY THESE DRAWINGS TO BE TRUE AND ACCURATE. ALL INTERPRETATION OF THIS INFORMATION IS TO BE BY THE CONTRACTOR AND AT THE CONTRACTORS OWN RISK.
3. ALL UTILITIES SHALL BE CAPPED AND ABANDONED AS GOVERNED BY STANDARD CITY OF PORTLAND REQUIREMENTS OR AS OTHERWISE DIRECTED IN THIS PLAN SET.
4. FOR NOTES REGARDING BATHYMETRIC DATA ESTABLISHMENT SEE SHEET C101.

TASK NO.	SCOPE OF WORK
18	DEMOLISH EXISTING UTILITY BRIDGE IN ITS ENTIRETY AND CAP UTILITIES AT EXISTING PIER 2.
19	SAW CUT AND DEMOLISH CONCRETE WALL, SEE SHEET W101-D FOR DETAILS.
20	DEMOLISH EXISTING BUILDING, SEE SHEET S-100D

P | N | D ENGINEERS, INC.
811 First Avenue, Suite 570
Seattle, Washington 98104
Phone: 206-624-1387
Fax: 206-624-1388
mail@pndengineers.com

STATE OF MAINE
DEPARTMENT OF TRANSPORTATION

PROJECT NUMBER 017812.00

PIN 017812.00

STATE OF MAINE DAVID M. PIERCE 9437 REGISTERED PROFESSIONAL ENGINEER

SIGNATURE 9437 | P.E. NUMBER | DATE 6/9/10

		BY	DATE
PROJ. MANAGER	PAUL POTTLE		
DESIGN-DETAILED	TWB	DH	09/01/04
CHECKED-REVIEWED	DP	DP	09/01/04
DESIGN2-DETAILED2			
DESIGN3-DETAILED3			
REVISIONS 1	P282-REBID 2010		06/08/10
REVISIONS 2			
REVISIONS 3			
REVISIONS 4			
FIELD CHANGES			

CITY OF PORTLAND
OCEAN GATEWAY PIER 2 BERTH 2

MARINE/WATER COMPONENTS DEMOLITION PLAN

W100-D

5/27/10
Filename: Drawings\2010\104040.01 - Ocean Gateway Pier 2 Berth 2\100% Review\20343802-D-W100-100.dwg

N.I.C.

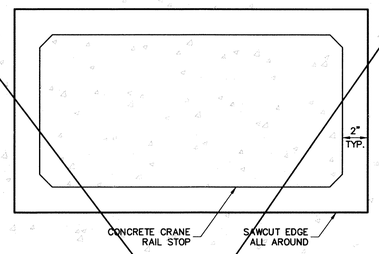

PLAN

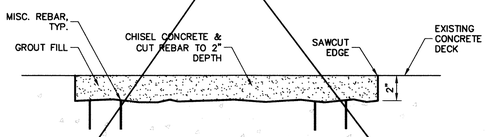

SECTION

A W100-D

CRANE RAIL STOP

N.T.S.

N.I.C.

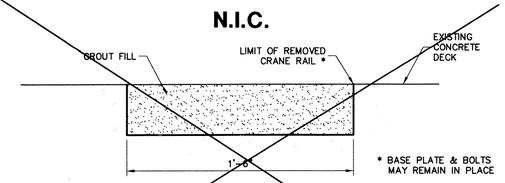

SECTION

C W100-D

CRANE RAIL CLOSURE

N.T.S.

N.I.C.

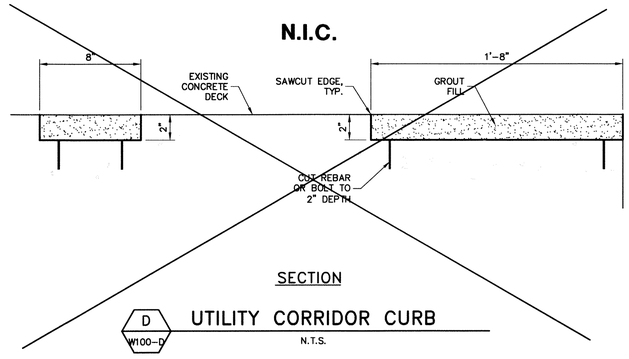

SECTION

D W100-D

UTILITY CORRIDOR CURB

N.T.S.

N.I.C.

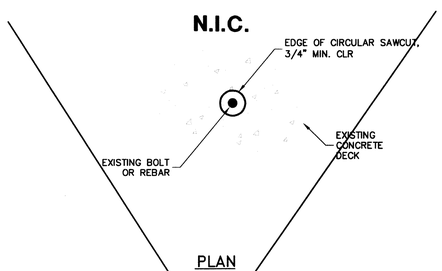

PLAN

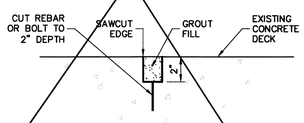

SECTION

B W100-D

BOLT DEMOLITION

N.T.S.

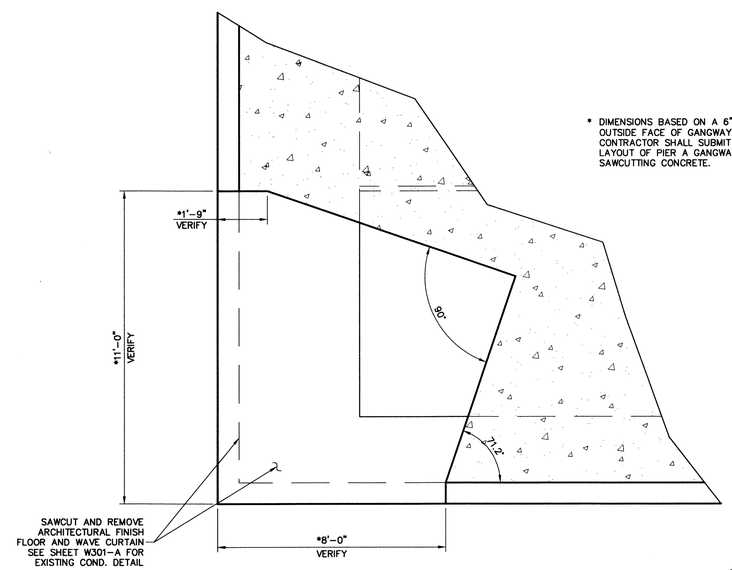

* DIMENSIONS BASED ON A 6" OFFSET FROM OUTSIDE FACE OF GANGWAY CHORD. CONTRACTOR SHALL SUBMIT SURVEYED LAYOUT OF PIER A GANGWAY PRIOR TO SAWCUTTING CONCRETE.

PIER A NORTHEAST CORNER PLAN

1

P N D ENGINEERS, INC.
811 First Avenue, Suite 570
Seattle, Washington 98104
Phone: 206-624-1387
Fax: 206-624-1388
mail@pndengineers.com

STATE OF MAINE
DEPARTMENT OF TRANSPORTATION

PROJECT NUMBER 017812.00

PIN 017812.00

STATE OF MAINE DAVID M. PIERCE 9437 REGISTERED PROFESSIONAL ENGINEER

SIGNATURE 9437

P.E. NUMBER

DATE 6/8/10

PROJ. MANAGER	PAUL POTTLE		
DESIGN-DETAILED	TWB	DH	09/01/04
CHECKED-REVIEWED	DP	DP	09/01/04
DESIGN2-DETAILED2			
DESIGN3-DETAILED3			
REVISIONS 1	P282-REBID 2010		06/08/10
REVISIONS 2			
REVISIONS 3			
REVISIONS 4			
FIELD CHANGES			

CITY OF PORTLAND
OCEAN GATEWAY PIER 2 BERTH 2

MARINE/WATER COMPONENTS
DEMOLITION DETAILS

W101-D

5/27/10
Filename: Drawings\2010\104040.01 - Ocean Gateway Pier 2 Berth 2\100% Review\20343802-D-W101-100.dwg

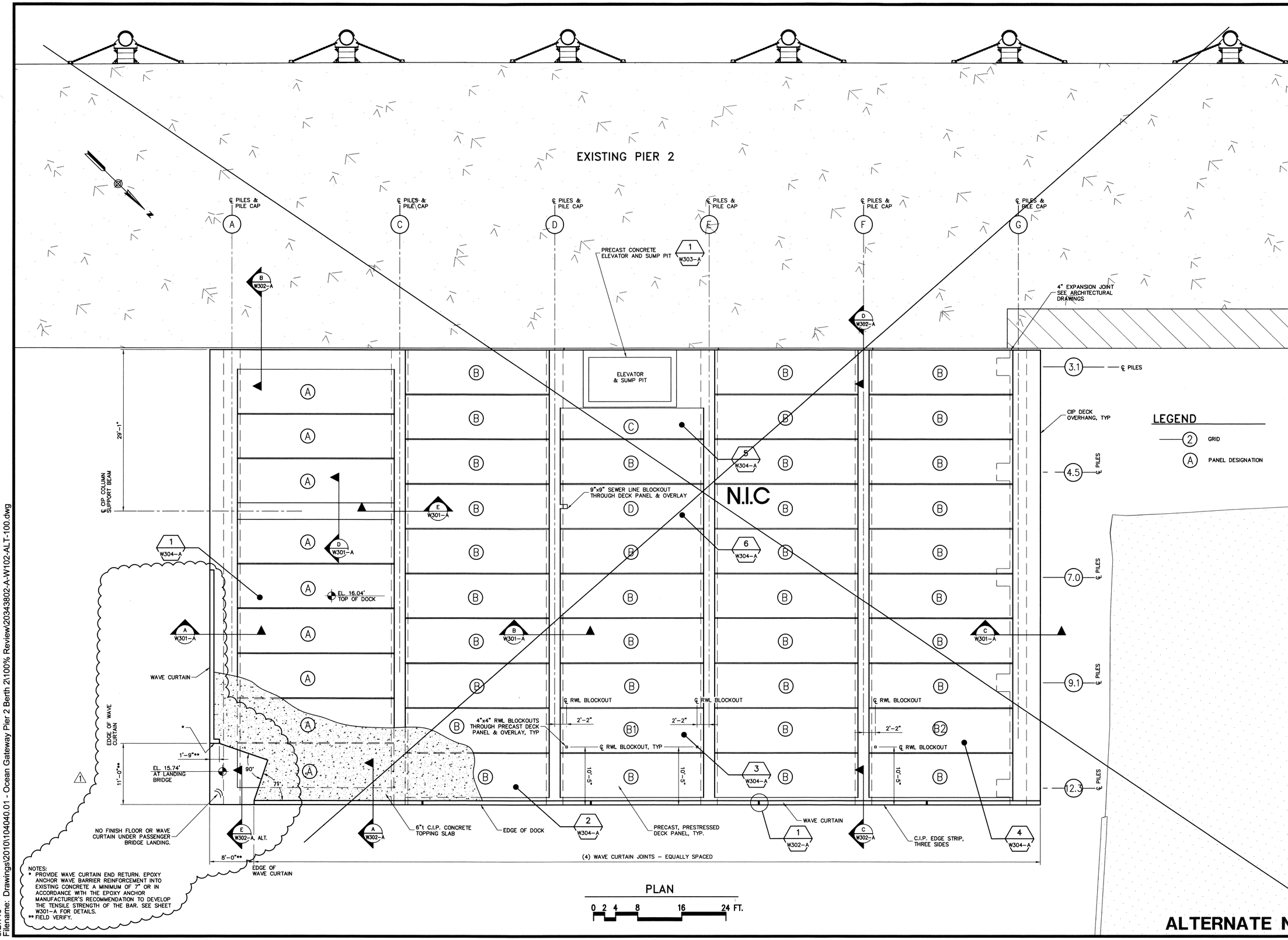

ALTERNATE No. 8

811 First Avenue, Suite 570
Seattle, Washington 98104
Phone: 206-624-1387
Fax: 206-624-1388
mail@pnderngineers.com
PND ENGINEERS, INC.

STATE OF MAINE
DEPARTMENT OF TRANSPORTATION

PROJECT NUMBER 017812.00

PIN 017812.00

STATE OF MAINE DAVID M. PIERCE 9427 REGISTERED PROFESSIONAL ENGINEER

SIGNATURE	9427
P.E. NUMBER	6/9/10
DATE	

PROJ. MANAGER PAUL POTTLE		BY	DATE
DESIGN-DETAILED	RJ	DH	09/01/04
CHECKED-REVIEWED	OT	DP	09/01/04
DESIGN2-DETAILD2			
DESIGN3-DETAILD3			05/08/10
REVISIONS 1	P282-REBID 2010		
REVISIONS 2			
REVISIONS 3			
REVISIONS 4			
FIELD CHANGES			

CITY OF PORTLAND
OCEAN GATEWAY PIER 2 BERTH 2

PIER A
DECK PANEL PLAN

W102-A
ALT.

NOTES:
* PROVIDE WAVE CURTAIN END RETURN. EPOXY ANCHOR WAVE BARRIER REINFORCEMENT INTO EXISTING CONCRETE A MINIMUM OF 7" OR IN ACCORDANCE WITH THE EPOXY ANCHOR MANUFACTURER'S RECOMMENDATION TO DEVELOP THE TENSILE STRENGTH OF THE BAR. SEE SHEET W301-A FOR DETAILS.
** FIELD VERIFY.

5/27/10
Filename: Drawings\2010\104040.01 - Ocean Gateway Pier 2 Berth 2\100% Review\20343802-A-W102-ALT-100.dwg

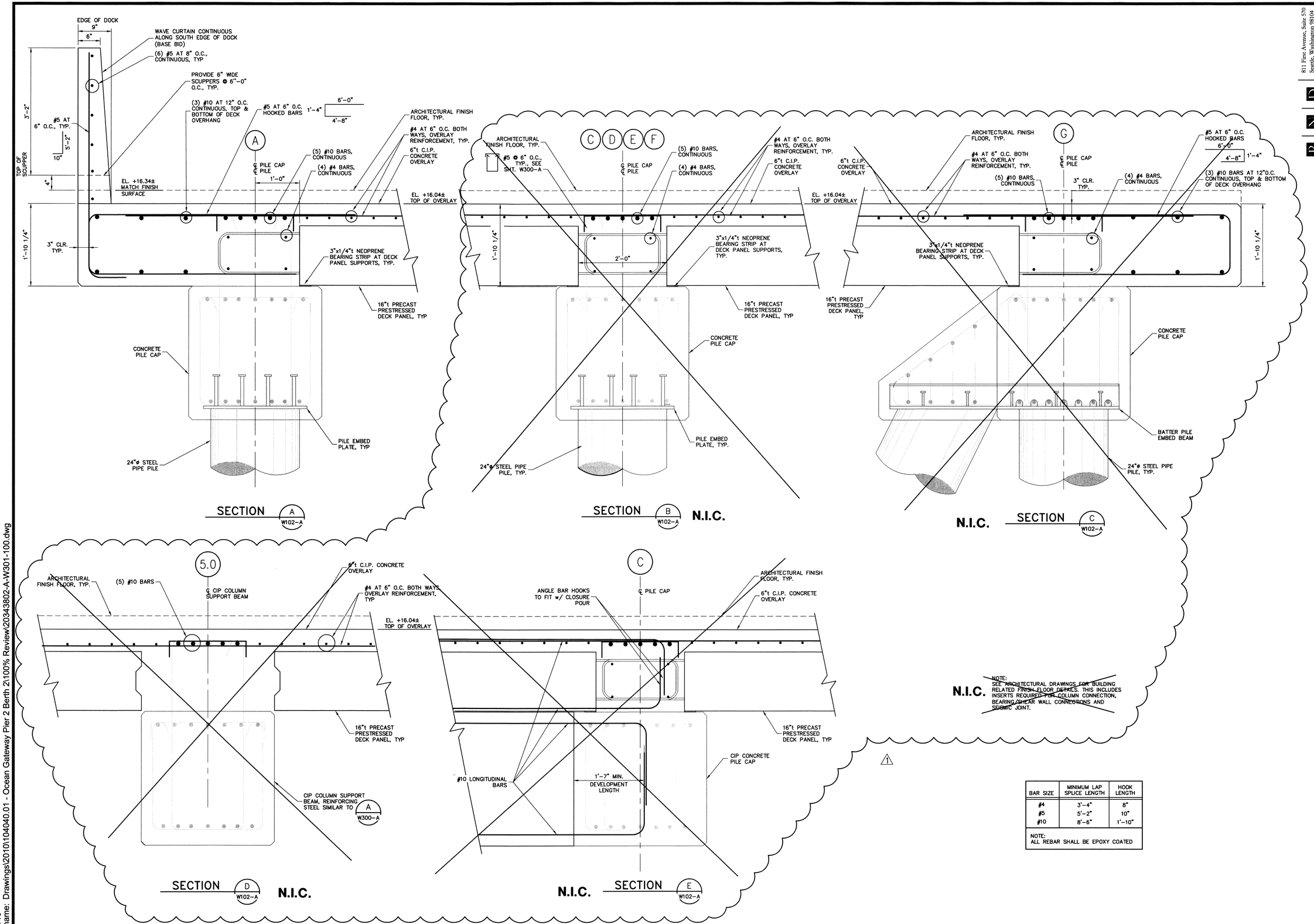

BAR SIZE	MINIMUM LAP SPLICE LENGTH	HOOK LENGTH
#4	3'-4"	8"
#5	5'-2"	10"
#10	8'-6"	1'-10"
NOTE: ALL REBAR SHALL BE EPOXY COATED		

811 First Avenue, Suite 570
Seattle, Washington 98104
Phone: 206-624-1387
Fax: 206-624-1388
mail@pnengineers.com
PND ENGINEERS, INC.

STATE OF MAINE
DEPARTMENT OF TRANSPORTATION

PROJECT NUMBER 017812.00

PIN 017812.00

STATE OF MAINE
DAVID M. PIERCE
9437
REGISTERED PROFESSIONAL ENGINEER

SIGNATURE	9437	
P.E. NUMBER	6/8/10	
DATE		

		BY	DATE
PROJ. MANAGER	PAUL POTTLE		
DESIGN-DETAILED	RJ	DH	09/01/04
CHECKED-REVIEWED	OT	DP	09/01/04
DESIGN2-DETAILED2			
DESIGN3-DETAILED3	P282-REBID 2010		06/08/10
REVISIONS 1			
REVISIONS 2			
REVISIONS 3			
REVISIONS 4			
FIELD CHANGES			

CITY OF PORTLAND
OCEAN GATEWAY PIER 2 BERTH 2

PIER A
DECK DETAILS

W301-A

5/27/10
Filename: Drawings\2010\104040.01 - Ocean Gateway Pier 2 Berth 2\100% Review\20343802-A-W301-100.dwg

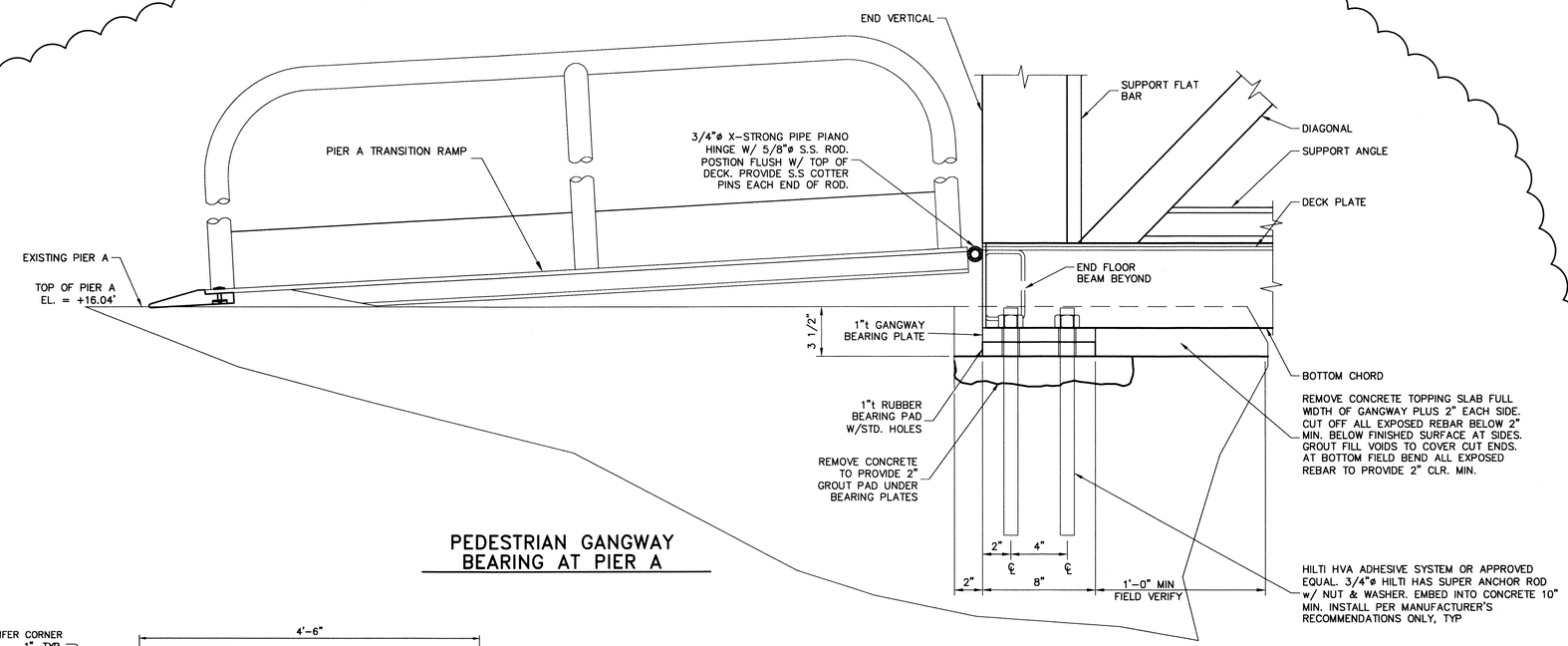

PEDESTRIAN GANGWAY BEARING AT PIER A

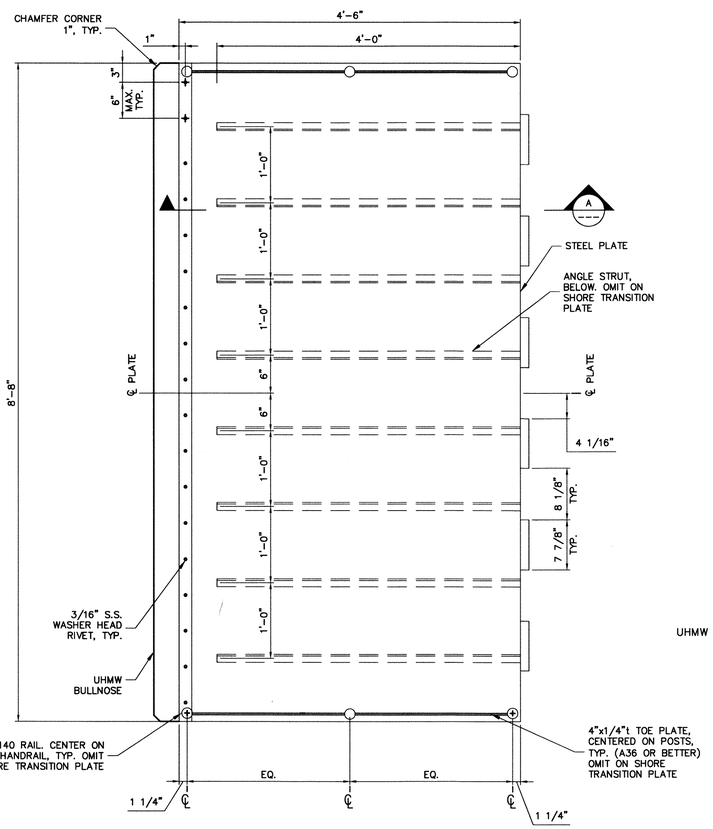

PIER A TRANSITION PLATE DETAIL

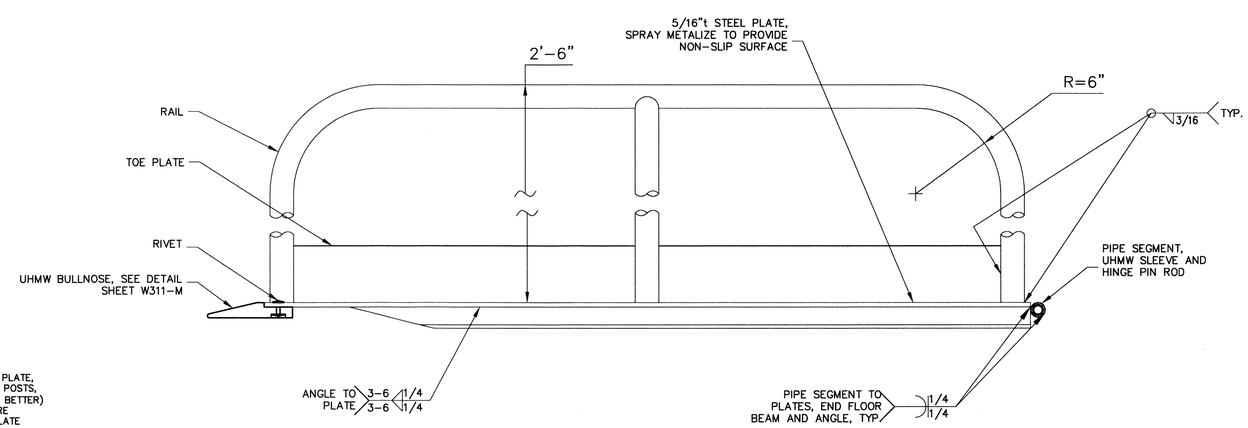

SECTION A

ALTERNATE No. 8

PND ENGINEERS, INC.
811 First Avenue, Suite 570
Seattle, Washington 98104
Phone: 206-624-1387
Fax: 206-624-1388
mail@pndengineers.com

STATE OF MAINE
DEPARTMENT OF TRANSPORTATION

PROJECT NUMBER 017812.00

PIN 017812.00

STATE OF MAINE DAVID M. PEDICE 9437 REGISTERED PROFESSIONAL ENGINEER

SIGNATURE 9437

P.E. NUMBER

DATE 6/8/10

		BY	DATE
PROJ. MANAGER	PAUL POTTLE		
DESIGN-DETAILED	RJ	DH	09/01/04
CHECKED-REVIEWED	DT	GP	09/01/04
DESIGN2-DETAILED2			
DESIGN3-DETAILED3			
REVISIONS 1			06/08/10
REVISIONS 2			
REVISIONS 3			
REVISIONS 4			
FIELD CHANGES			

CITY OF PORTLAND
OCEAN GATEWAY PIER 2 BERTH 2

PIER 2 BERTH 2
PIER A GANGWAY DETAILS

W307-A
ALT.

5/27/10
Filename: 20343802-A-W307-ALT-100

NOTE:
FOR NOTES REGARDING BATHYMETRIC DATA ESTABLISHMENT SEE SHEET C101.

SEE PILE SCHEDULE SHEET W400 FOR PILE INFORMATION.

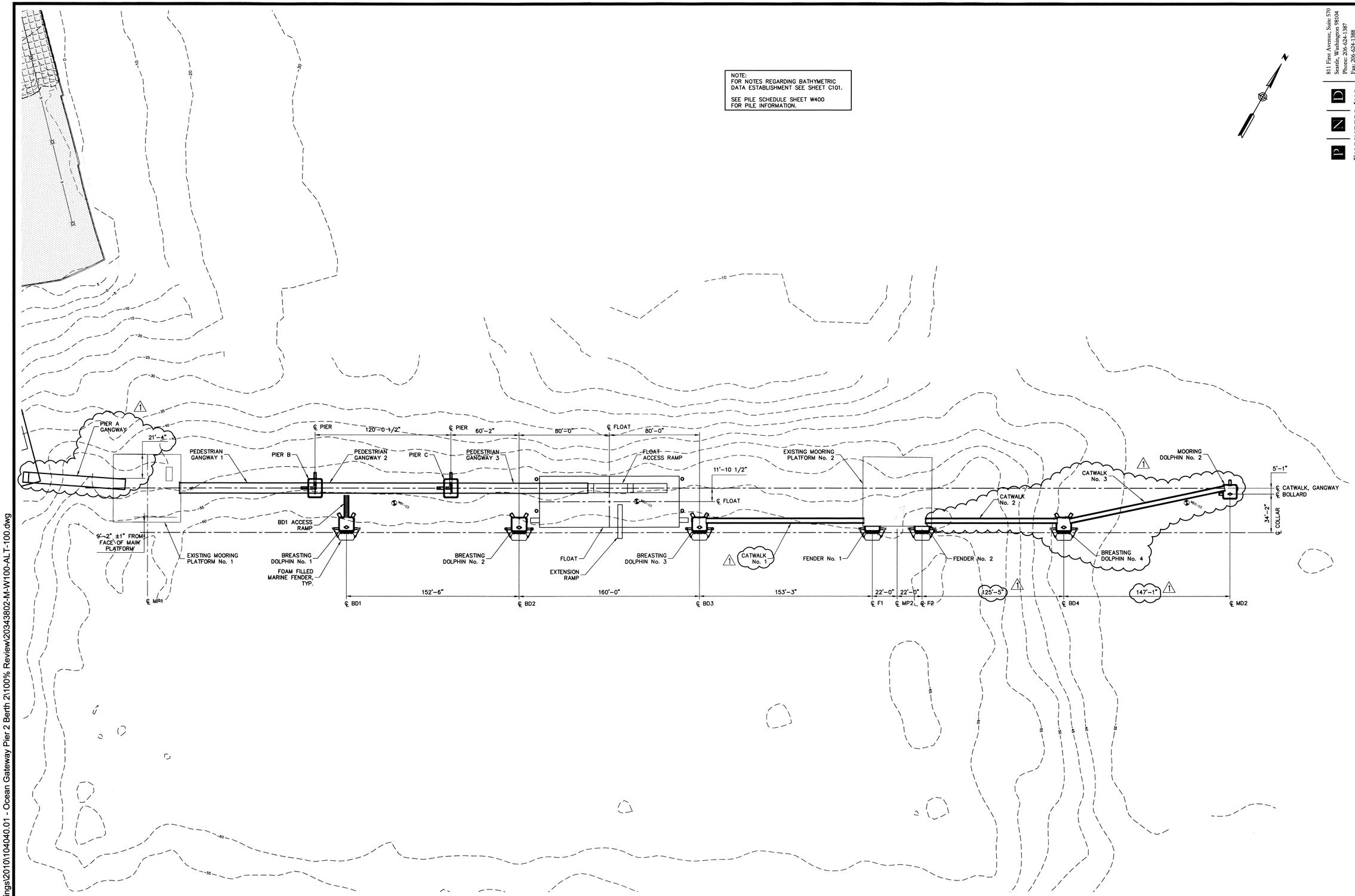

PLAN

0 20 40 80 120 FT.

ALTERNATE No. 4

811 First Avenue, Suite 570
Seattle, Washington 98104
Phone: 206-624-1387
Fax: 206-624-1388
mail@pnd-engineers.com

PND ENGINEERS, INC.

STATE OF MAINE
DEPARTMENT OF TRANSPORTATION

PROJECT NUMBER 017812.00

PIN 017812.00

STATE OF MAINE
DAVID M. PIERCE
9407
REGISTERED PROFESSIONAL ENGINEER

SIGNATURE 9423

P.E. NUMBER

6/9/10
DATE

PROJ. MANAGER	PAUL POTTLE		
DESIGN-DETAILED	TWB	DH	09/01/04
CHECKED-REVIEWED	RJ	DP	09/01/04
DESIGN2-DETAILED2			
DESIGN3-DETAILED3			
REVISIONS 1	P282-REBID 2010		05/08/10
REVISIONS 2			
REVISIONS 3			
REVISIONS 4			
FIELD CHANGES			

CITY OF PORTLAND
OCEAN GATEWAY PIER 2 BERTH 2

PIER 2 BERTH 2
SITE PLAN

W100-M
ALT.

9/30/04
Filename: Drawings\2010\104040.01 - Ocean Gateway Pier 2 Berth 2\100% Review\20343802-M-W100-ALT-100.dwg

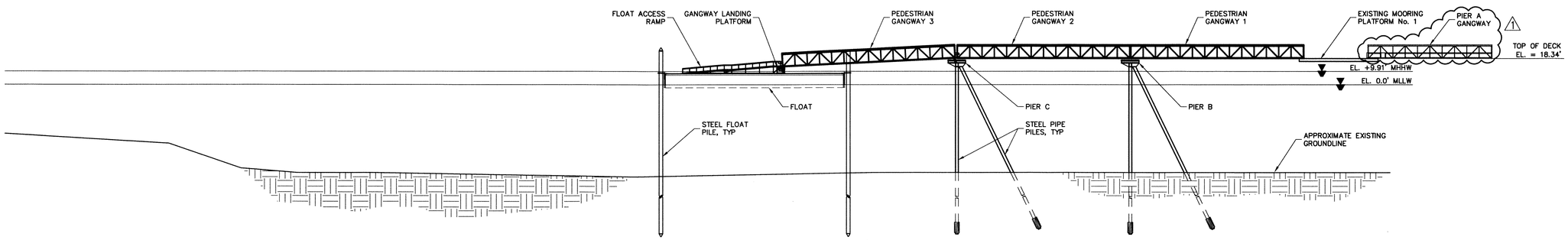

NORTH ELEVATION

0 20 40 80 120 FT.

NOTE:
- EXISTING MOORING PLATFORMS SUPPORT PILES NOT SHOWN FOR CLARITY
-BREASTING/MOORING DOLPHINS, CATWALKS AND FENDERS BEYOND NOT SHOWN FOR CLARITY

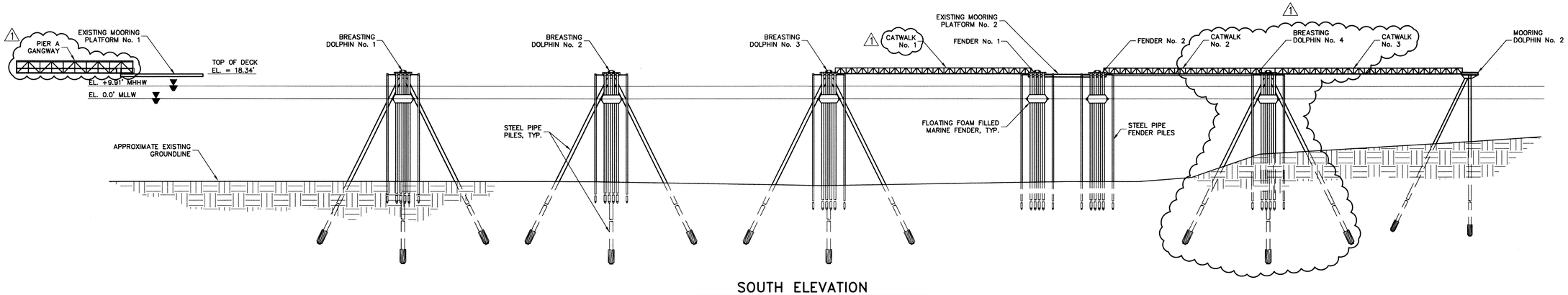

SOUTH ELEVATION

0 20 40 80 120 FT.

NOTE:
- EXISTING MOORING PLATFORMS SUPPORT PILES NOT SHOWN FOR CLARITY
- GANGWAYS AND FLOATS BEYOND NOT SHOWN FOR CLARITY

ALTERNATE No. 4

P N D ENGINEERS, INC.
811 First Avenue, Suite 570
Seattle, Washington 98104
Phone: 206-624-1387
Fax: 206-624-1388
mail@pndengineers.com

STATE OF MAINE
DEPARTMENT OF TRANSPORTATION

PROJECT NUMBER 017812.00

PIN 017812.00

STATE OF MAINE — DAVID M. PIERCE 9437 — REGISTERED PROFESSIONAL ENGINEER

SIGNATURE	9437	DATE
P.E. NUMBER	6/8/10	

PROJ. MANAGER	PAUL POTTLE		
DESIGN-DETAILED	TWG	DH	09/01/04
CHECKED-REVIEWED	RJJ	DP	09/01/04
DESIGN2-DETAILED2			
DESIGN3-DETAILED3			
REVISIONS 1	P282-REBID 2010		05/08/10
REVISIONS 2			
REVISIONS 3			
REVISIONS 4			
FIELD CHANGES			

CITY OF PORTLAND
OCEAN GATEWAY PIER 2 BERTH 2

PIER 2 BERTH 2
ELEVATIONS

W200-M
ALT.

5/27/10
Filename: Drawings\2010\104040.01 - Ocean Gateway Pier 2 Berth 2\100% Review\20343802-M-W200-ALT-100.dwg

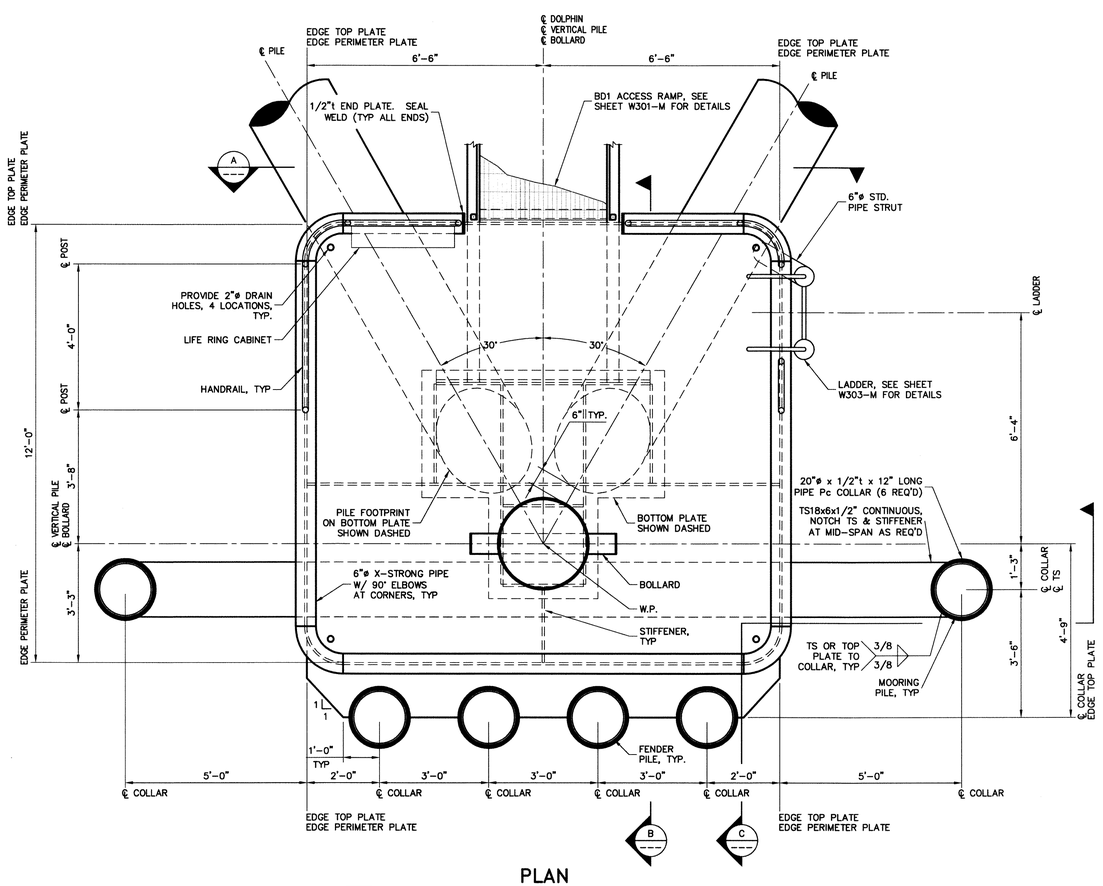

PLAN
BREASTING DOLPHIN No. 1

1 — SCALE: 1/2"=1'-0"
(BREASTING DOLPHIN No. 2, 3 & 4) 1

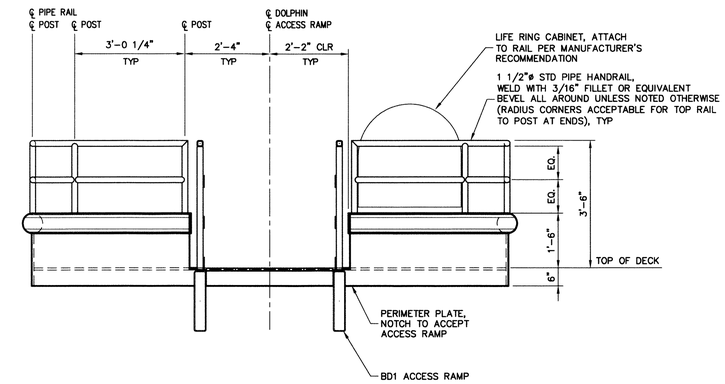

SECTION A

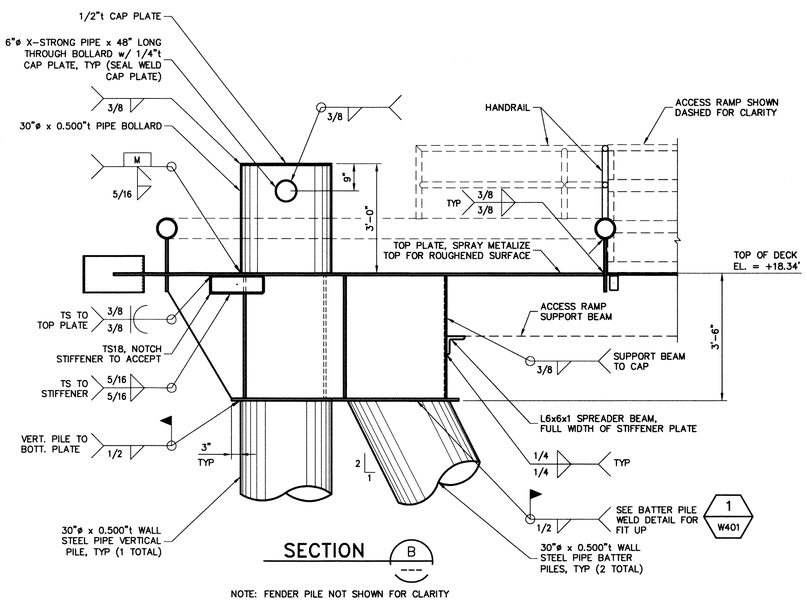

SECTION B

NOTE: FENDER PILE NOT SHOWN FOR CLARITY

NOTE:
ALL PLATES 3/4"t UNLESS OTHERWISE NOTED.

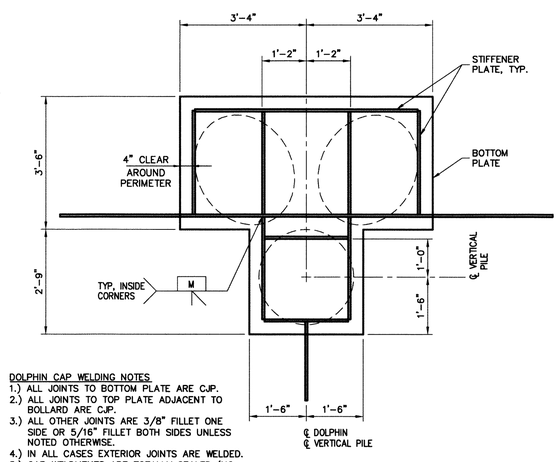

DOLPHIN CAP WELDING NOTES
1.) ALL JOINTS TO BOTTOM PLATE ARE CJP.
2.) ALL JOINTS TO TOP PLATE ADJACENT TO BOLLARD ARE CJP.
3.) ALL OTHER JOINTS ARE 3/8" FILLET ONE SIDE OR 5/16" FILLET BOTH SIDES UNLESS NOTED OTHERWISE.
4.) IN ALL CASES EXTERIOR JOINTS ARE WELDED.
5.) CAP WELDMENTS ARE TOTALLY SEALED (NO RAT HOLES OR DRAIN HOLES).

PLAN
BOTTOM PLATE

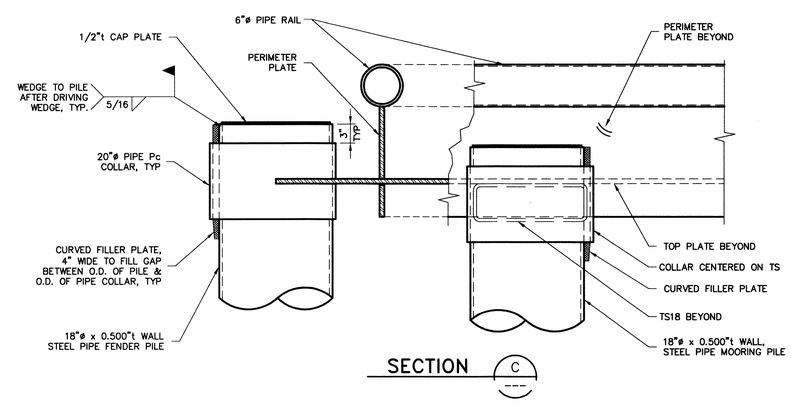

SECTION C

ALTERNATE No. 4

811 First Avenue, Suite 570
Seattle, Washington 98104
Phone: 206-624-1387
Fax: 206-624-1388
mail@pndengineers.com
PND ENGINEERS, INC.

STATE OF MAINE
DEPARTMENT OF TRANSPORTATION

PROJECT NUMBER 017812.00

PIN 017812.00

STATE OF MAINE — DAVID M. PIERCE 9437 — REGISTERED PROFESSIONAL ENGINEER

SIGNATURE 9437

P.E. NUMBER 6/8/10

DATE

		BY	DATE
PROJ. MANAGER	PAUL POTTLE		
DESIGN-DETAILED	TWB	DH	09/01/04
CHECKED-REVIEWED	RJ	DP	09/01/04
DESIGN2-DETAILED2			
DESIGN3-DETAILED3			
REVISIONS 1	P282-REBID 2010		06/08/10
REVISIONS 2			
REVISIONS 3			
REVISIONS 4			
FIELD CHANGES			

CITY OF PORTLAND
OCEAN GATEWAY PIER 2 BERTH 2

PIER 2 BERTH 2
BREASTING DOLPHIN No. 1

W300-M
ALT.

5/27/10
Filename: Drawings\2010\104040.01 - Ocean Gateway Pier 2 Berth 2\100% Review\20343802-M-W300-ALT-100.dwg

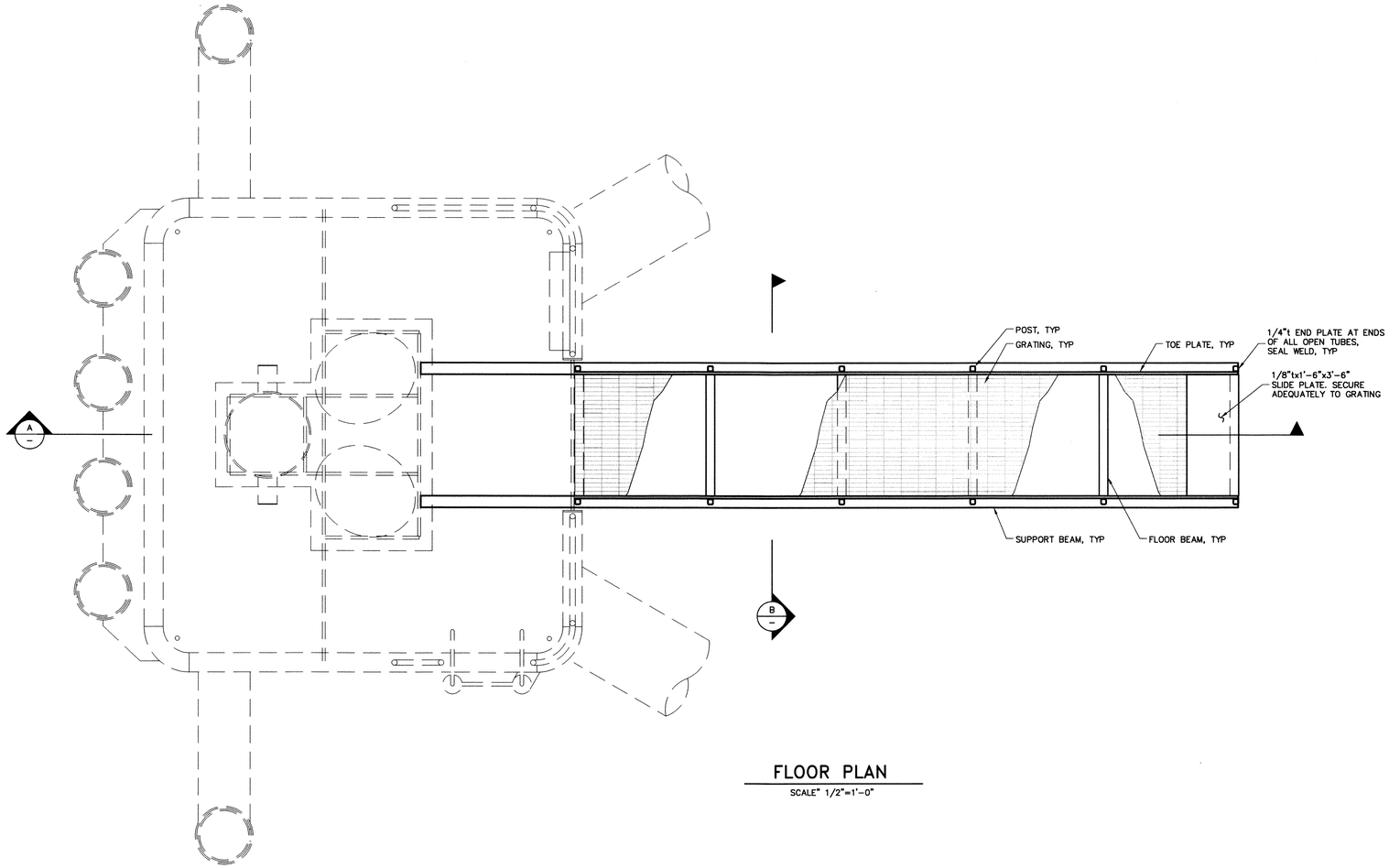

FLOOR PLAN

SCALE" 1/2"=1'-0"

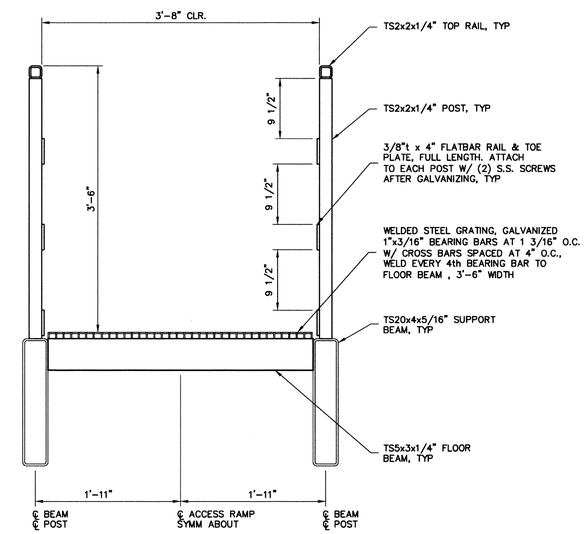

TYPICAL SECTION (B)

NOTE:
WELD ALL JOINTS WITH 1/4" FILLET WELD OR EQUIVALENT BEVEL WELD ALL AROUND UNLESS OTHERWISE NOTED.

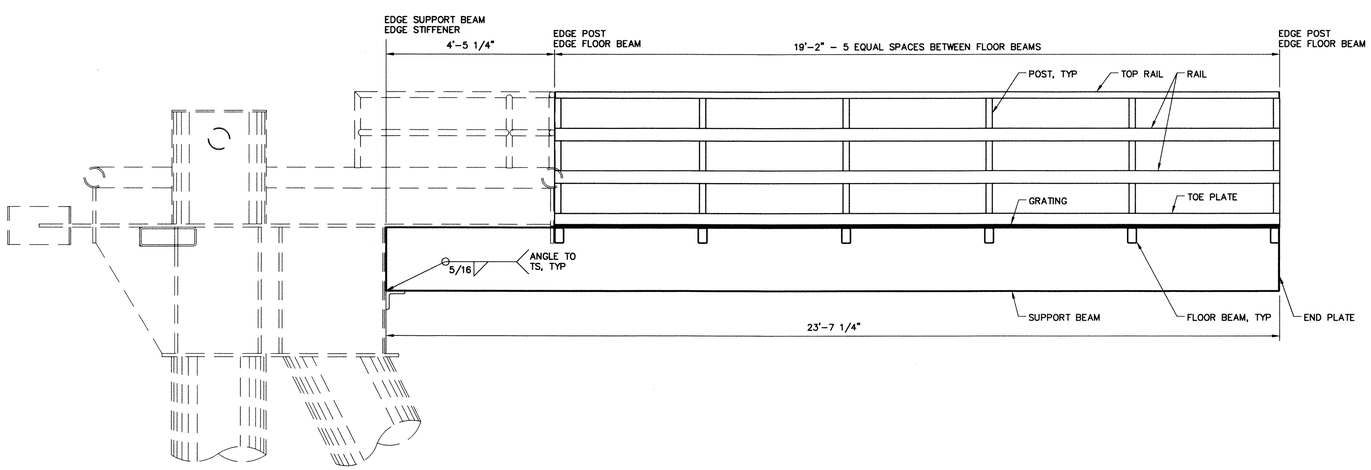

SECTION (A)

SCALE: 1/2"=1'-0"

ALTERNATE No. 4

P N D ENGINEERS, INC.
811 First Avenue, Suite 570
Seattle, Washington 98104
Phone: 206-624-1387
Fax: 206-624-1388
mail@pndengineers.com

STATE OF MAINE
DEPARTMENT OF TRANSPORTATION

PROJECT NUMBER 017812.00

PIN 017812.00

STATE OF MAINE DAVID M. PERCE 9407 REGISTERED PROFESSIONAL ENGINEER

SIGNATURE 9/23

P.E. NUMBER

DATE 6/8/10

		BY	DATE
PROJ. MANAGER	PAUL POTTLE		
DESIGN-DETAILED	TWB	DH	09/01/04
CHECKED-REVIEWED	RJ	DP	09/01/04
DESIGN2-DETAILED2			
DESIGN3-DETAILED3			
REVISIONS 1	P282-REBID 2010		05/08/10
REVISIONS 2			
REVISIONS 3			
REVISIONS 4			
FIELD CHANGES			

CITY OF PORTLAND
OCEAN GATEWAY PIER 2 BERTH 2

PIER 2 BERTH 2
BD1 ACCESS RAMP

W301-M
ALT.

9/30/04
Filename: Drawings\2010\104040.01 - Ocean Gateway Pier 2 Berth 2\100% Review\20343802-M-W301-ALT-100.dwg

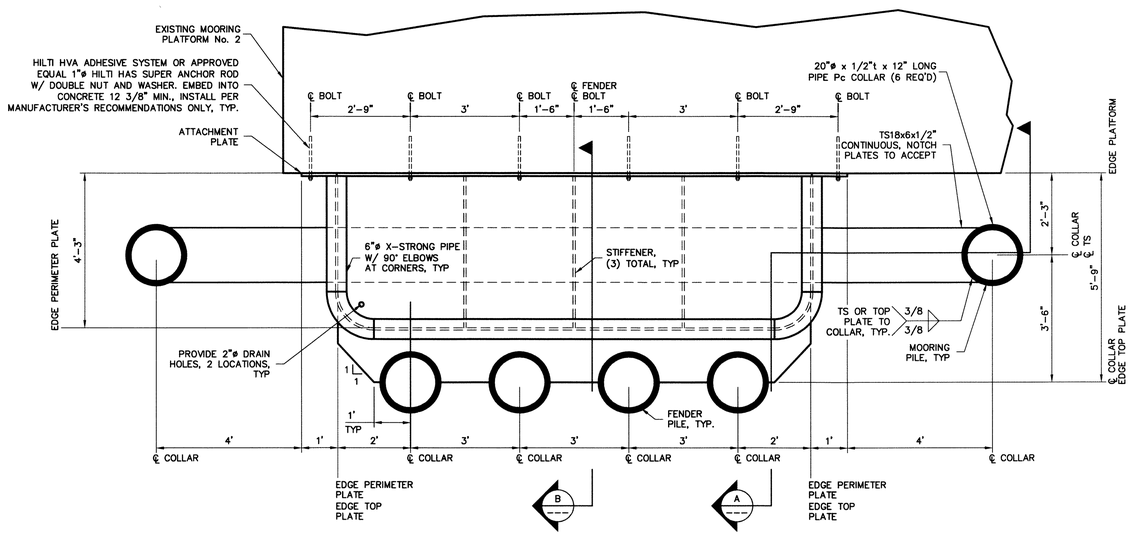

PLAN–MOORING PLATFORM FENDER No. 1

SCALE" 1/2"=1'-0"

(FENDER No. 2 SIMILAR)

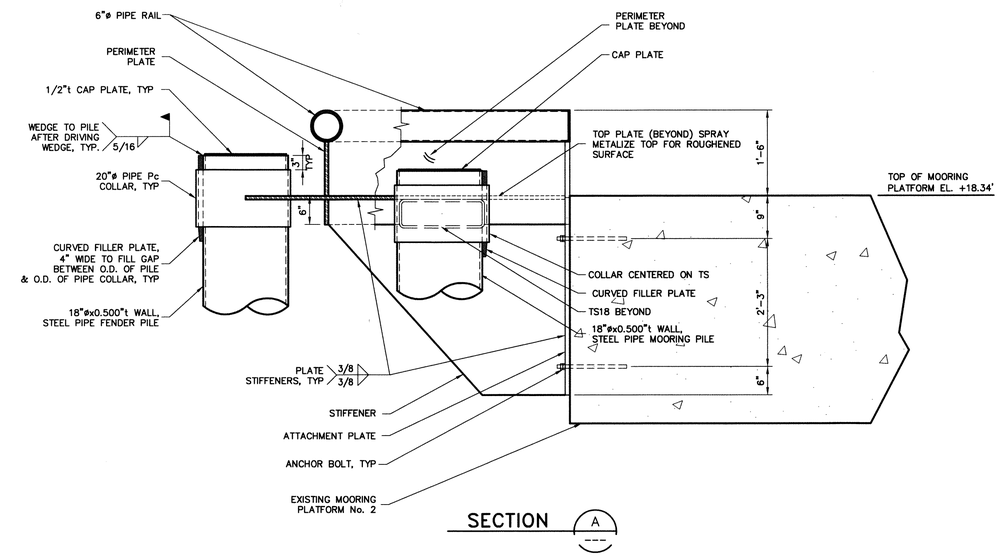

SECTION A

NOTE:
ALL PLATES 3/4"t UNLESS OTHERWISE NOTED.

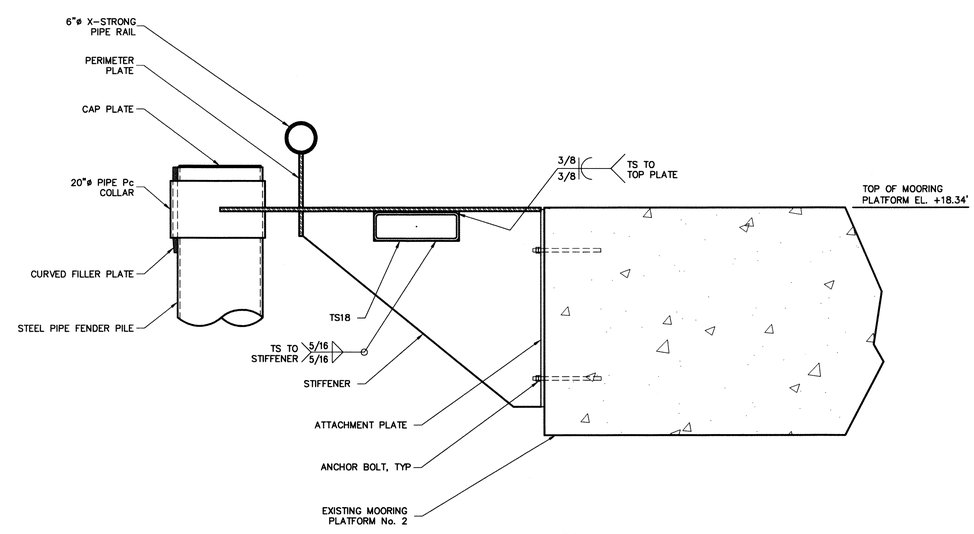

SECTION B

FOR DETAILS NOT SHOWN SEE SECTION A

ALTERNATE No. 4

811 First Avenue, Suite 570
Seattle, Washington 98104
Phone: 206-624-1387
Fax: 206-624-1388
mail@pndengineers.com
PND ENGINEERS, INC.

STATE OF MAINE
DEPARTMENT OF TRANSPORTATION

PROJECT NUMBER 017812.00

PIN 017812.00

STATE OF MAINE DAVID M. PEDE 9437 REGISTERED PROFESSIONAL ENGINEER

SIGNATURE 9437	P.E. NUMBER 6/8/10	DATE	

PROJ. MANAGER	PAUL POTTLE		
DESIGN-DETAILED	TWB	DH	09/01/04
CHECKED-REVIEWED	RJ	DP	09/01/04
DESIGN2-DETAILED2			
DESIGN3-DETAILED3		P282-REBID 2010	06/08/10
REVISIONS 1			
REVISIONS 2			
REVISIONS 3			
REVISIONS 4			
FIELD CHANGES			

CITY OF PORTLAND
OCEAN GATEWAY PIER 2 BERTH 2

PIER 2 BERTH 2
FENDER

W302-M
ALT.

9/30/04
Filename: Drawings\2010\104040.01 - Ocean Gateway Pier 2 Berth 2\100% Review\20343802-M-W302-ALT-100.dwg

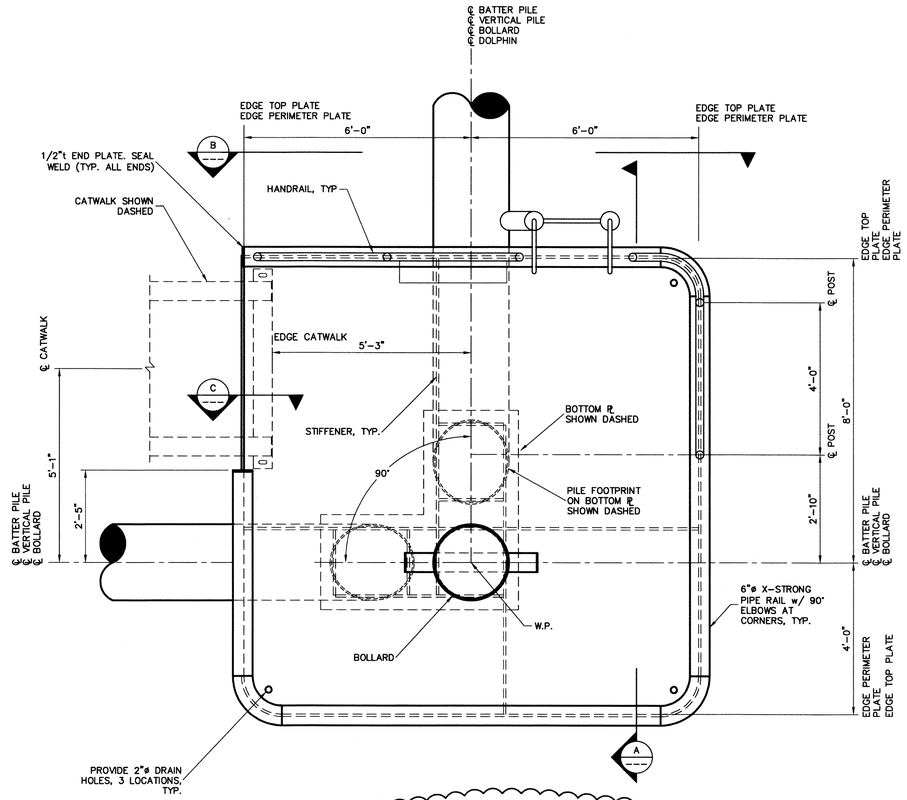

PLAN
MOORING DOLPHIN No. 2

SCALE" 1/2"=1'-0"

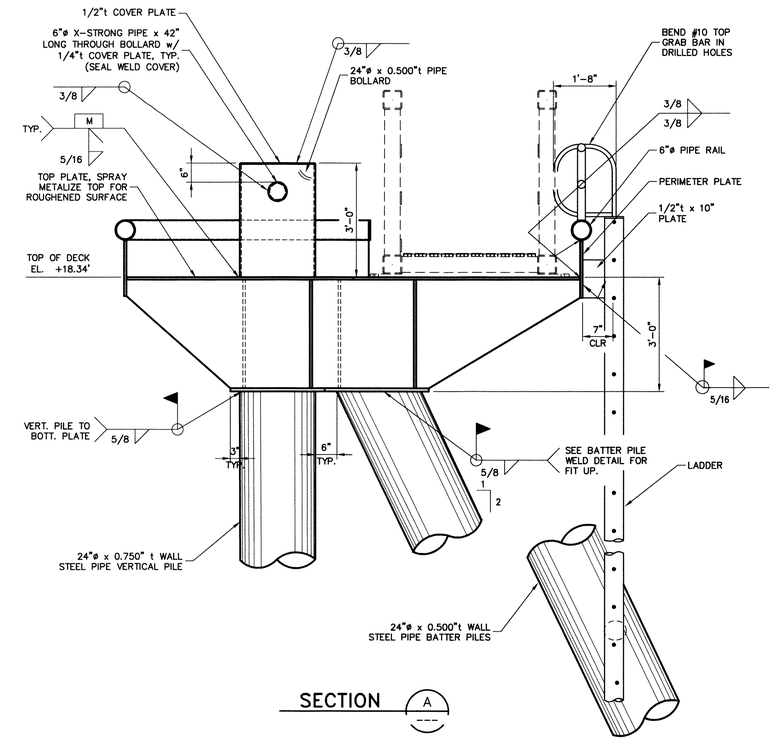

SECTION A

NOTE:
ALL PLATES 3/4 "t UNLESS OTHERWISE NOTED.

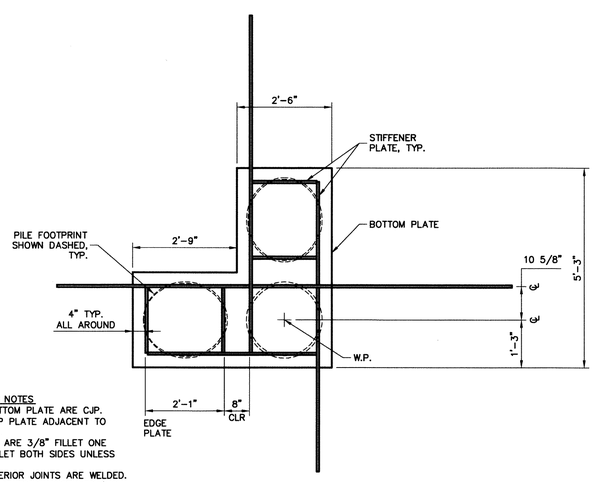

DOLPHIN CAP WELDING NOTES:
1.) ALL JOINTS TO BOTTOM PLATE ARE CJP.
2.) ALL JOINTS TO TOP PLATE ADJACENT TO BOLLARD ARE CJP.
3.) ALL OTHER JOINTS ARE 3/8" FILLET ONE SIDE OR 5/16" FILLET BOTH SIDES UNLESS NOTED OTHERWISE.
4.) IN ALL CASES EXTERIOR JOINTS ARE WELDED.
5.) CAP WELDMENTS ARE TOTALLY SEALED (NO RAT HOLES OR DRAIN HOLES).

PLAN
BOTTOM PLATE

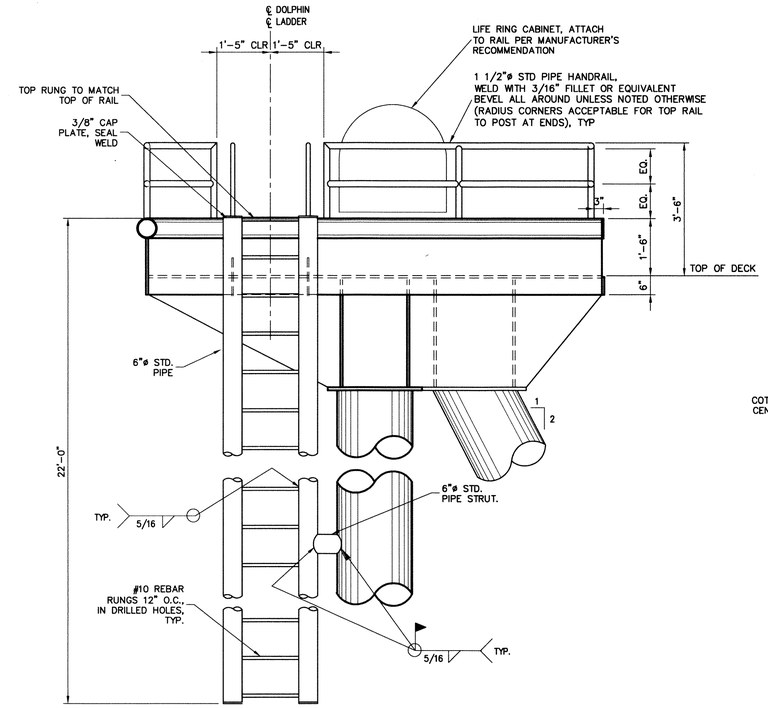

SECTION B

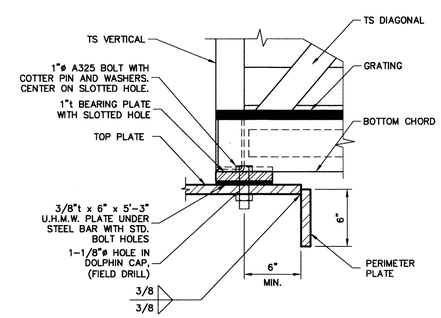

SECTION C

NTS

ALTERNATE No. 4

811 First Avenue, Suite 570
Seattle, Washington 98104
Phone: 206-624-1387
Fax: 206-624-1388
mail@pndengineers.com
PND ENGINEERS, INC.

STATE OF MAINE
DEPARTMENT OF TRANSPORTATION

PROJECT NUMBER 017812.00

PIN 017812.00

STATE OF MAINE — DAVID M. PEARCE — 9437 — REGISTERED PROFESSIONAL ENGINEER

SIGNATURE

P.E. NUMBER 9437

DATE 6/8/10

		BY	DATE
PROJ. MANAGER	PAUL POTTLE		
DESIGN-DETAILED	TWB	DH	09/01/04
CHECKED-REVIEWED	RJ	DP	09/01/04
DESIGN2-DETAILED2			
DESIGN3-DETAILED3			
REVISION 1	P282-REBID 2010		06/08/10
REVISION 2			
REVISION 3			
REVISION 4			
FIELD CHANGES			

CITY OF PORTLAND
OCEAN GATEWAY PIER 2 BERTH 2

PIER 2 BERTH 2
MOORING DOLPHIN

W303-M
ALT.

5/27/10
Filename: Drawings\2010\104040.01 - Ocean Gateway Pier 2 Berth 2\100% Review\20343802-M-W303-ALT-100.dwg

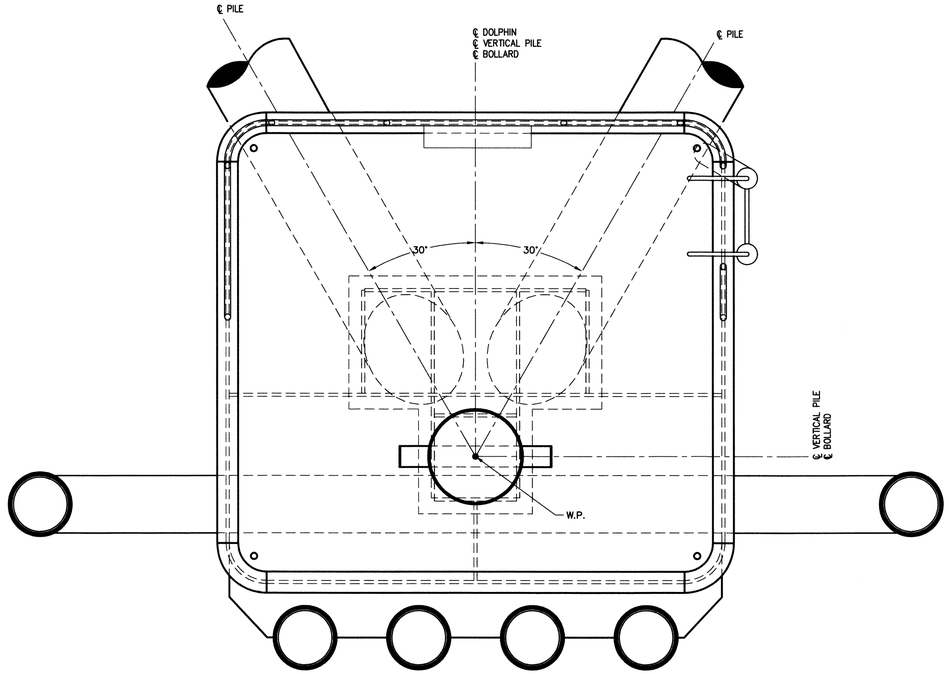

PLAN
BREASTING DOLPHIN No. 2

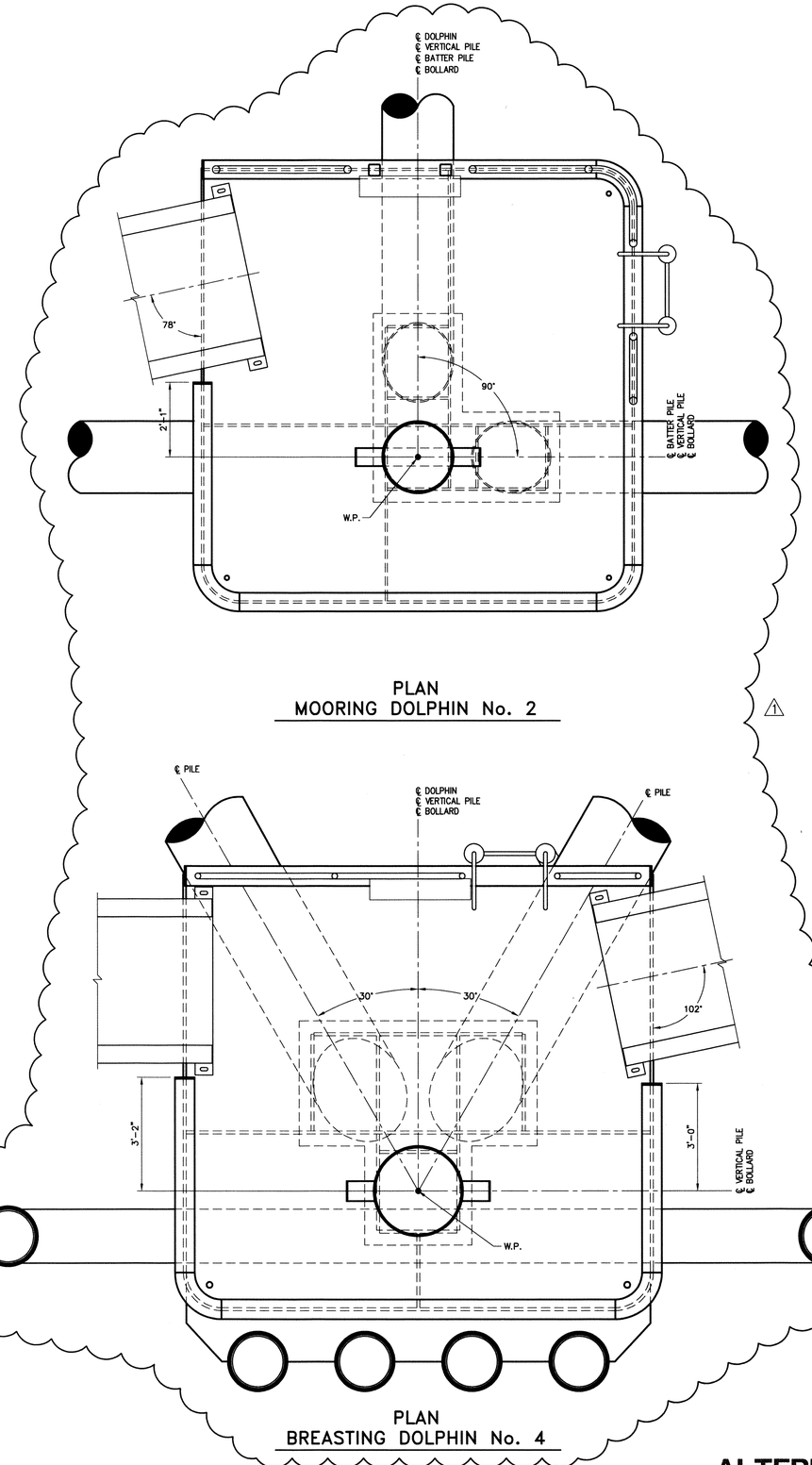

PLAN
MOORING DOLPHIN No. 2

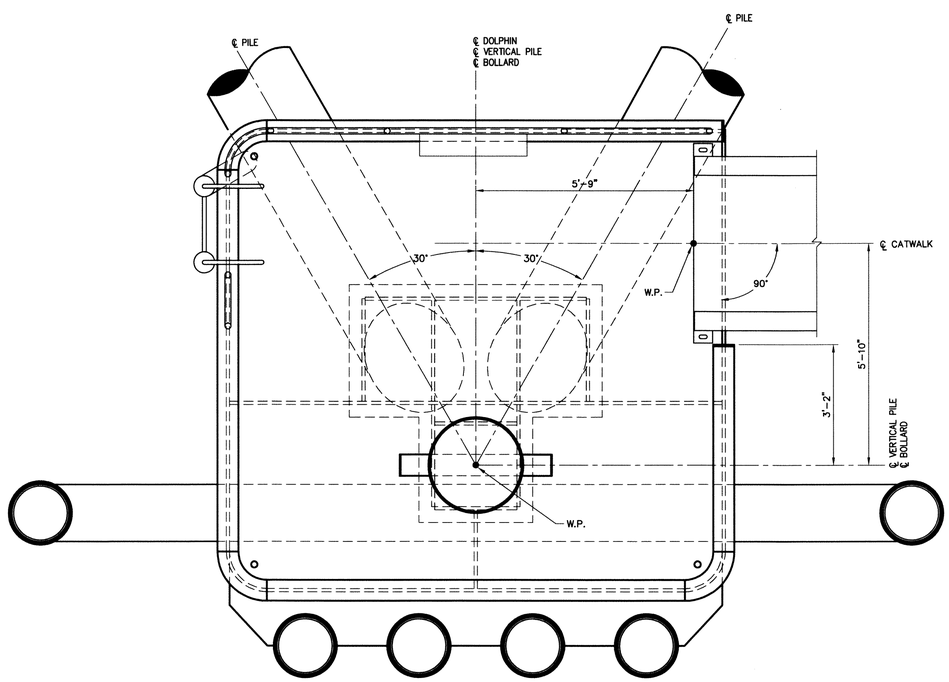

PLAN
BREASTING DOLPHIN No. 3

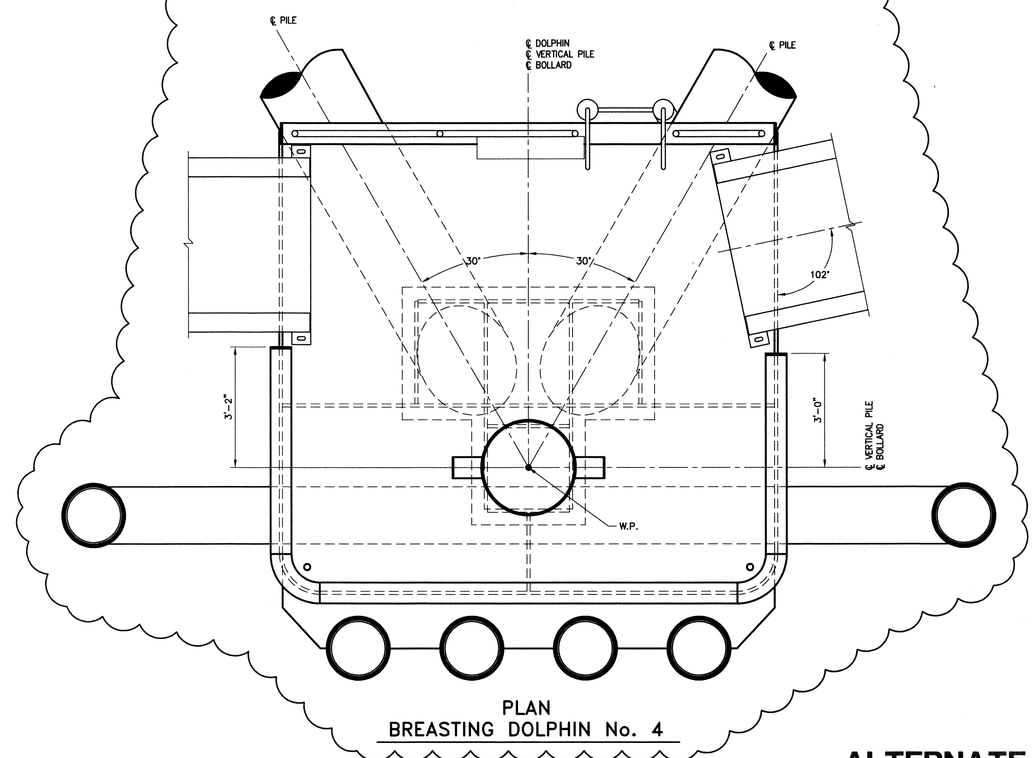

PLAN
BREASTING DOLPHIN No. 4

ALTERNATE No. 4

P N D ENGINEERS, INC.
811 First Avenue, Suite 570
Seattle, Washington 98104
Phone: 206-624-1387
Fax: 206-624-1388
mail@pndengineers.com

STATE OF MAINE
DEPARTMENT OF TRANSPORTATION

PROJECT NUMBER 017812.00

PIN
017812.00

STATE OF MAINE
DAVID M. PEDICE
5407
REGISTERED PROFESSIONAL ENGINEER

SIGNATURE 943

P.E. NUMBER 6/8/10

DATE

PROJ. MANAGER	PAUL POTTLE	BY	DATE
DESIGN-DETAILED	TWB	DH	09/01/04
CHECKED-REVIEWED	RJ	DP	09/01/04
DESIGN2-DETAILED2			
DESIGN3-DETAILED3	P282-REBID 2010		06/08/10
REVISIONS 1			
REVISIONS 2			
REVISIONS 3			
REVISIONS 4			
FIELD CHANGES			

CITY OF PORTLAND
OCEAN GATEWAY PIER 2 BERTH 2

PIER 2 BERTH 2
DOLPHIN CONFIGURATIONS

W304-M
ALT.

5/27/10
Filename: Drawings\2010\104040.01 - Ocean Gateway Pier 2 Berth 2\100% Review\20343802-M-W304-ALT-100.dwg

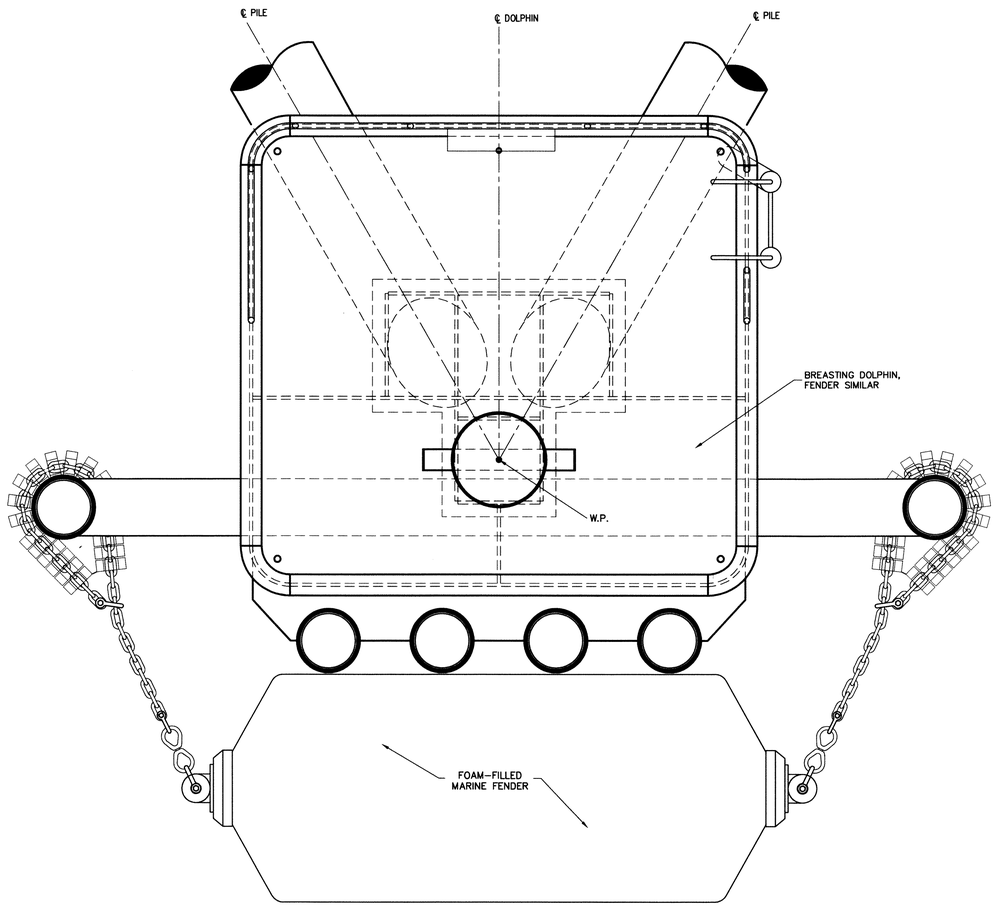

PLAN
MARINE FENDER ATTACHMENT
SCALE: 1/2"=1'-0"

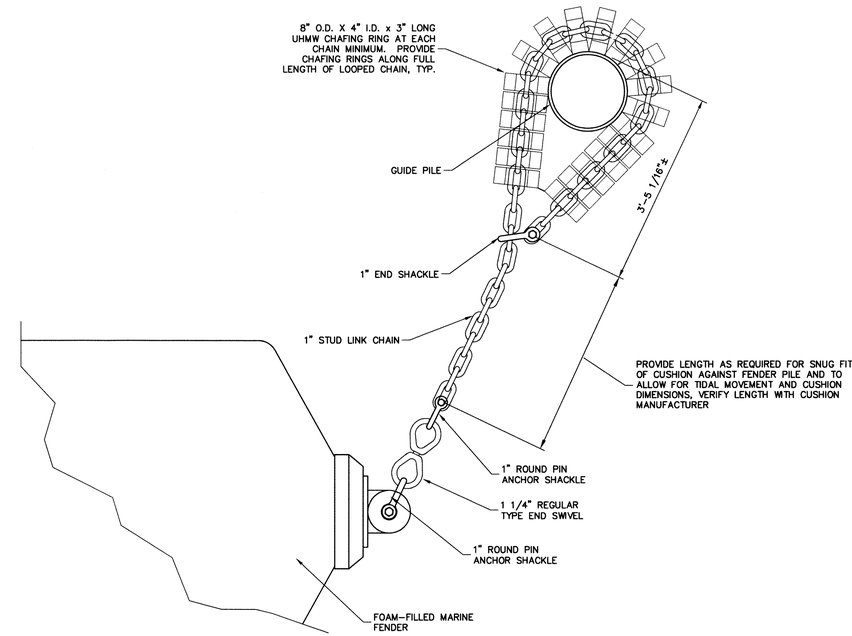

NOTE:
ALL HARDWARE SHALL BE GALVANIZED.

DETAIL
NOT TO SCALE

ALTERNATE No. 4

P N D ENGINEERS, INC.
811 First Avenue, Suite 570
Seattle, Washington 98104
Phone: 206-624-1387
Fax: 206-624-1388
mail@pndengineers.com

STATE OF MAINE
DEPARTMENT OF TRANSPORTATION

PROJECT NUMBER 017812.00

PIN 017812.00

STATE OF MAINE — DAVID M. PEDE 9437 — REGISTERED PROFESSIONAL ENGINEER

SIGNATURE	9437	DATE
P.E. NUMBER	6/8/10	

PROJ. MANAGER	PAUL POTTLE	BY	DATE
DESIGN-DETAILED	TWB	DH	09/01/04
CHECKED-REVIEWED	RJ	DP	09/01/04
DESIGN2-DETAILED2			
DESIGN3-DETAILED3	P282-REBID 2010		06/08/10
REVISIONS 1			
REVISIONS 2			
REVISIONS 3			
REVISIONS 4			
FIELD CHANGES			

CITY OF PORTLAND
OCEAN GATEWAY PIER 2 BERTH 2

PIER 2 BERTH 2
FOAM FILLED MARINE FENDER

W305-M
ALT.

9/30/04
Filename: Drawings\2010\104040.01 - Ocean Gateway Pier 2 Berth 2\100% Review\20343802-M-W305-ALT-100.dwg

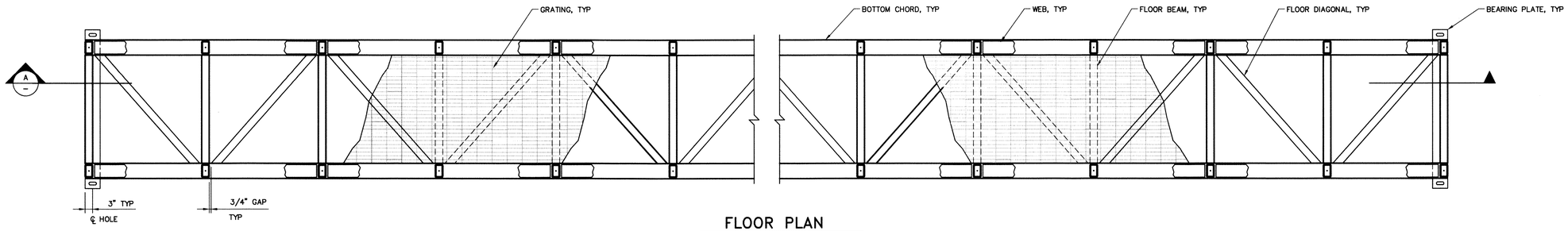

FLOOR PLAN

SCALE" 1/2"=1'-0"

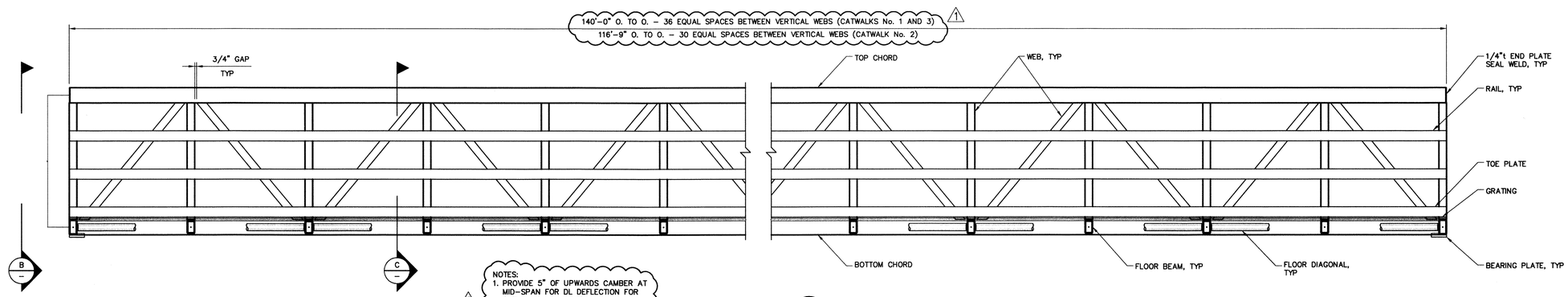

NOTES:
1. PROVIDE 5" OF UPWARDS CAMBER AT MID-SPAN FOR DL DEFLECTION FOR CATWALKS No. 1 AND 2.
2. PROVIDE OF 2 1/2" UPWARDS CAMBER AT MID-SPAN FOR DL DEFLECTION FOR CATWALK No. 1.

SECTION A

SCALE: 1/2"=1'-0"

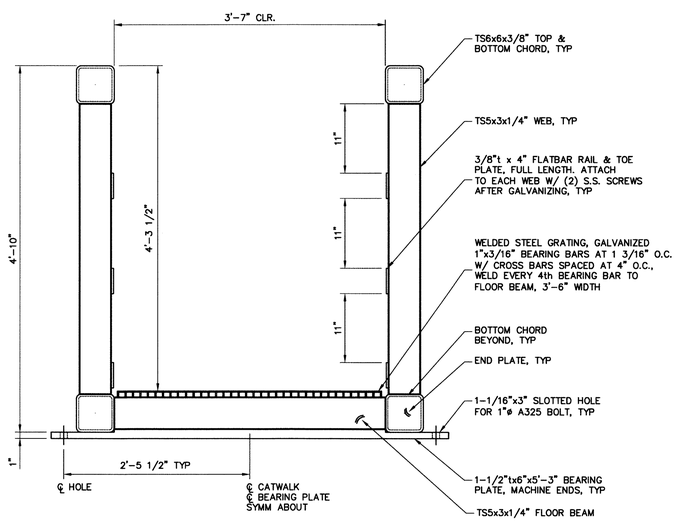

END VIEW B

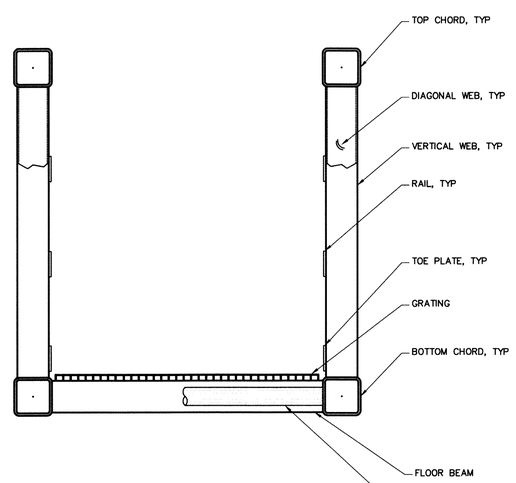

TYPICAL SECTION C

NOTE:
FOR DETAILS NOT SHOWN SEE END VIEW

NOTE:
WELD ALL JOINTS WITH 1/4" FILLET WELD OR EQUIVALENT BEVEL WELD ALL AROUND UNLESS OTHERWISE NOTED.

ALL STEEL SHALL BE GALVANIZED UNLESS OTHERWISE NOTED.

ALTERNATE No. 4

811 First Avenue, Suite 570
Seattle, Washington 98104
Phone: 206-624-1387
Fax: 206-624-1388
mail@pndengineers.com
PND ENGINEERS, INC.

STATE OF MAINE
DEPARTMENT OF TRANSPORTATION

PROJECT NUMBER 017812.00

PIN 017812.00

STATE OF MAINE DAVID M. PEDE 9437 REGISTERED PROFESSIONAL ENGINEER

SIGNATURE 9437	P.E. NUMBER 6/8/10	DATE

PROJ. MANAGER	PAUL POTTLE		
DESIGN-DETAILED	TWB	DH	09/01/04
CHECKED-REVIEWED	RJ	DP	09/01/04
DESIGN2-DETAILED2			
DESIGN3-DETAILED3			
REVISIONS 1	P282-REBID 2010		06/08/10
REVISIONS 2			
REVISIONS 3			
REVISIONS 4			
FIELD CHANGES			

CITY OF PORTLAND
OCEAN GATEWAY PIER 2 BERTH 2

PIER 2 BERTH 2
CATWALK

W306-M
ALT.

5/28/10
Filename: Drawings\2010\104040.01 - Ocean Gateway Pier 2 Berth 2\100% Review\20343802-M-W306-ALT-100.dwg

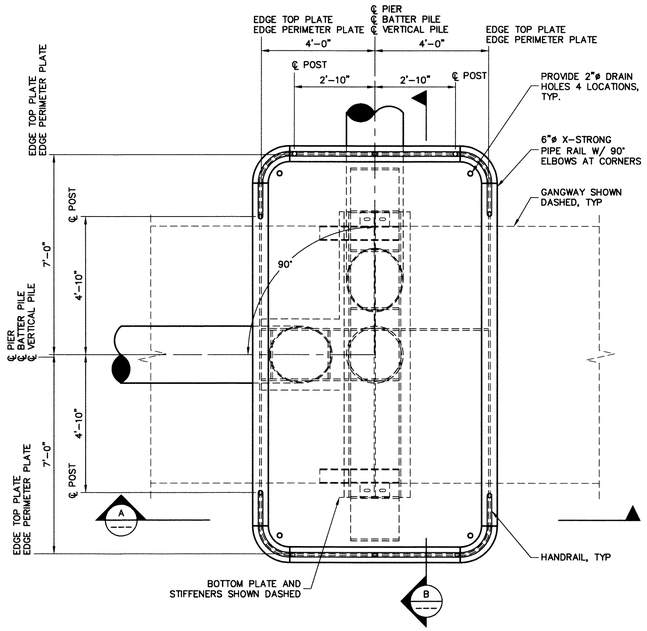

PLAN

SCALE" 3/8"=1'-0"

NOTE: BEARING SUPPORT NOT SHOWN FOR CLARITY.

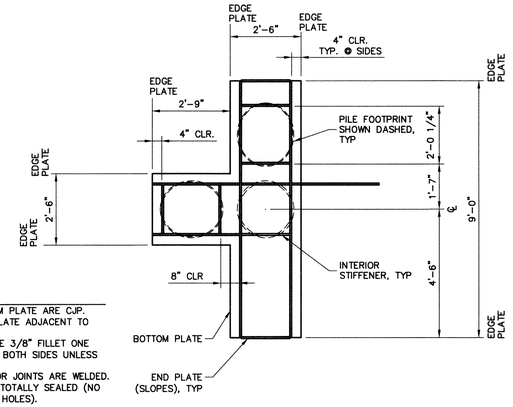

PIER CAP WELDING NOTES
1.) ALL JOINTS TO BOTTOM PLATE ARE CJP.
2.) ALL JOINTS TO TOP PLATE ADJACENT TO BOLLARD ARE CJP.
3.) ALL OTHER JOINTS ARE 3/8" FILLET ONE SIDE OR 5/16" FILLET BOTH SIDES UNLESS NOTED OTHERWISE.
4.) IN ALL CASES EXTERIOR JOINTS ARE WELDED.
5.) CAP WELDMENTS ARE TOTALLY SEALED (NO RAT HOLES OR DRAIN HOLES).

2 PLAN BOTTOM PLATE

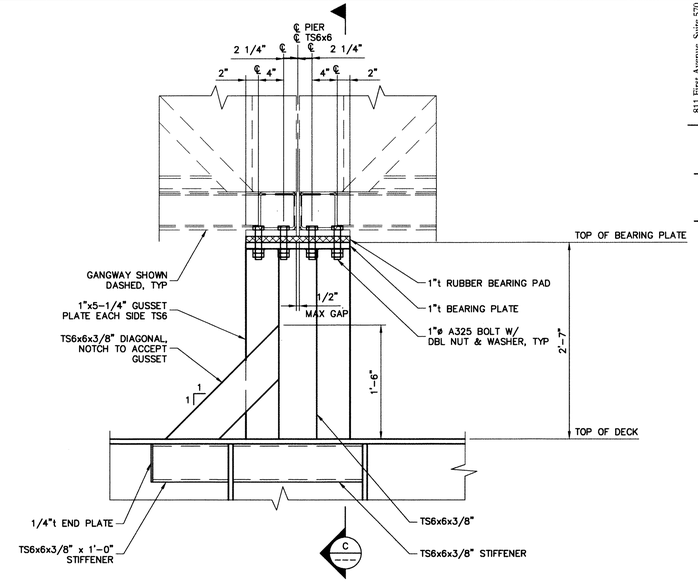

3 BEARING SUPPORT

NOTE:
ALL PLATES 3/4"t UNLESS OTHERWISE NOTED.

WELD ALL JOINTS WITH 5/16" FILLET WELD OR EQUIVALENT BEVEL WELD ALL AROUND UNLESS OTHERWISE NOTED

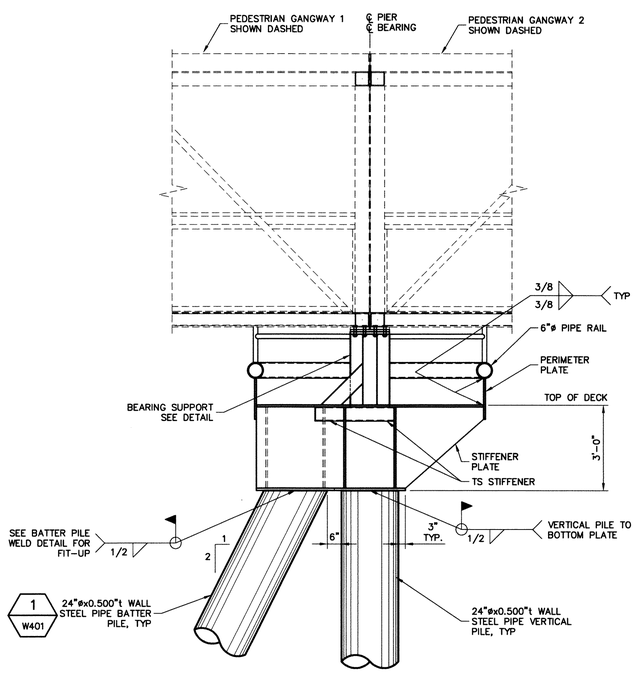

SECTION A

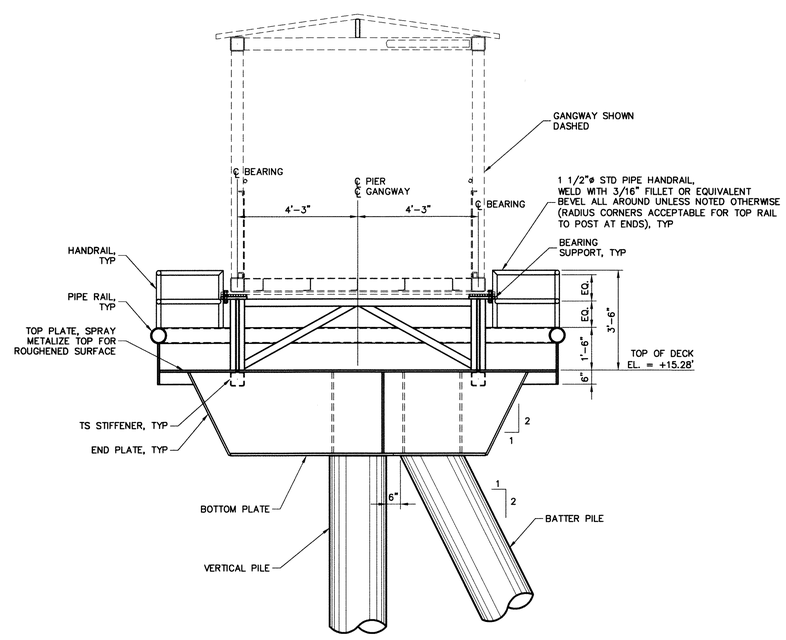

SECTION B

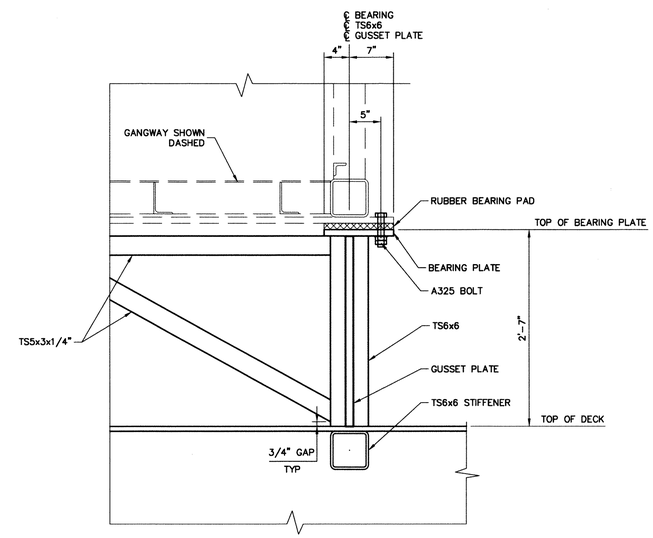

SECTION C

ALTERNATE No. 4

811 First Avenue, Suite 570
Seattle, Washington 98104
Phone: 206-624-1387
Fax: 206-624-1388
mail@pndengineers.com
PND ENGINEERS, INC.

STATE OF MAINE
DEPARTMENT OF TRANSPORTATION

PROJECT NUMBER 017812.00

PIN 017812.00

STATE OF MAINE — DAVID M. PEDE 9437 — REGISTERED PROFESSIONAL ENGINEER

SIGNATURE	943	
P.E. NUMBER	6/8/10	
DATE		

		BY	DATE
PROJ. MANAGER	PAUL POTTLE		
DESIGN-DETAILED	TWB	DH	09/01/04
CHECKED-REVIEWED	RJ	DP	09/01/04
DESIGN2-DETAILED2			
DESIGN3-DETAILED3			
REVISIONS 1	P282-REBID 2010		06/08/10
REVISIONS 2			
REVISIONS 3			
REVISIONS 4			
FIELD CHANGES			

CITY OF PORTLAND
OCEAN GATEWAY PIER 2 BERTH 2

PIER 2 BERTH 2
PIER B

W307-M
ALT.

9/30/04
Filename: Drawings\2010\104040.01 - Ocean Gateway Pier 2 Berth 2\100% Review\20343802-M-W307-ALT-100.dwg

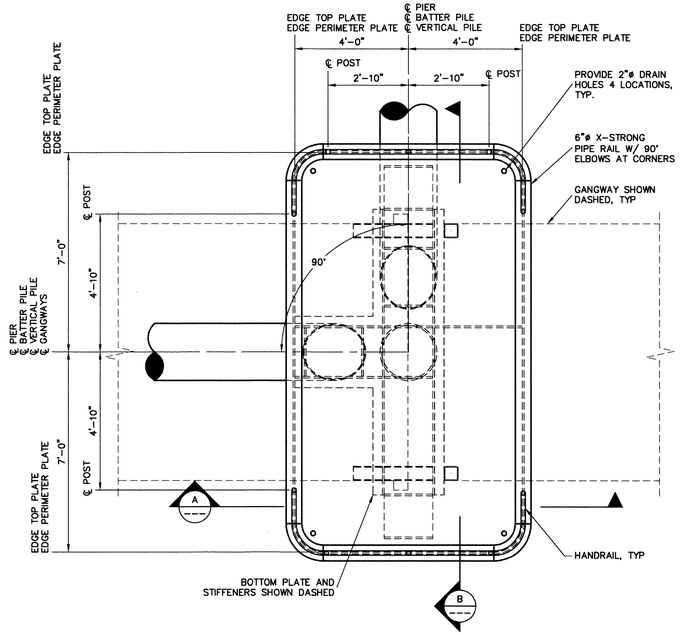

PLAN

SCALE" 3/8"=1'-0"

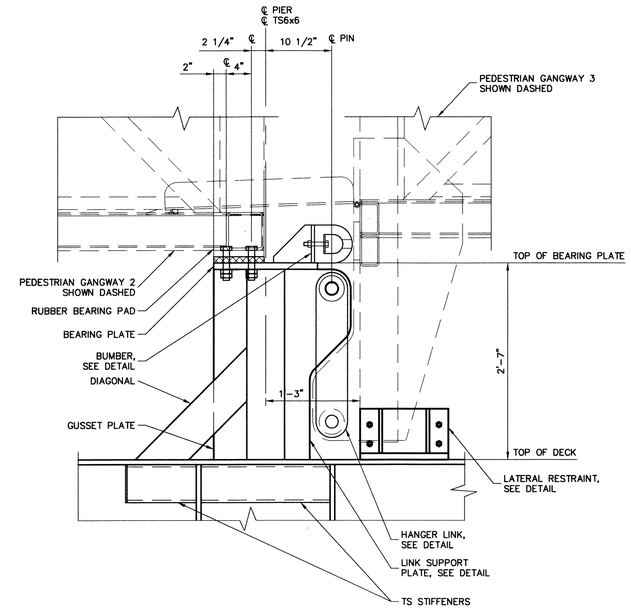

2 BEARING SUPPORT

NOTE:
ALL PLATES 3/4"t UNLESS OTHERWISE NOTED.

FOR DETAILS NOT SHOWN SEE PIER B.

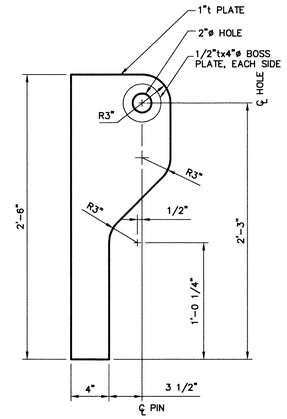

3 LINK SUPPORT PLATE

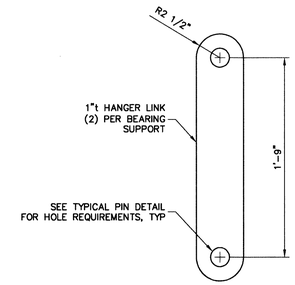

4 HANGER LINK

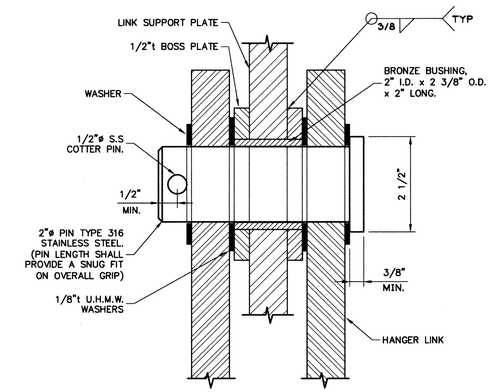

5 TYPICAL PIN DETAIL

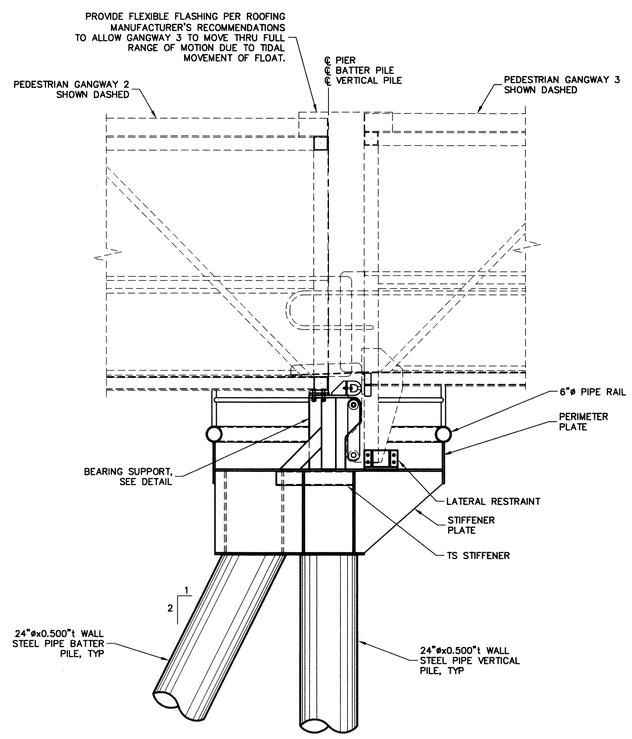

SECTION A

SCALE: 3/8"=1'-0"

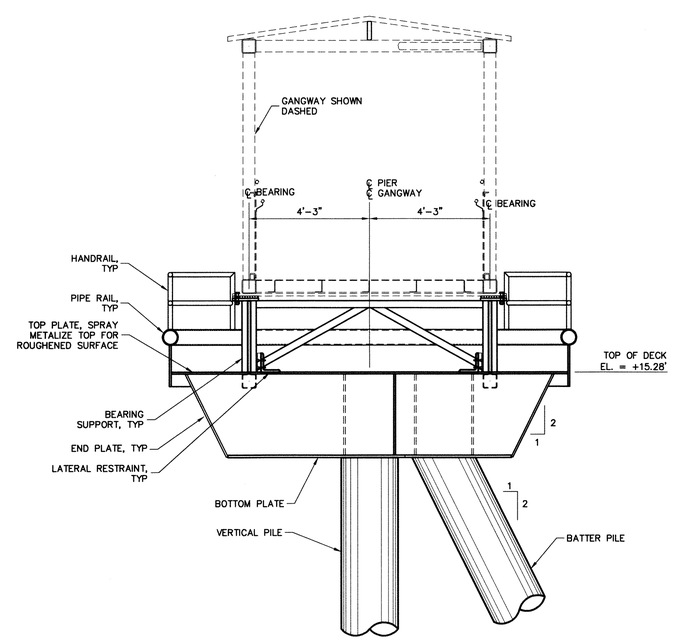

SECTION B

SCALE: 3/8"=1'-0"

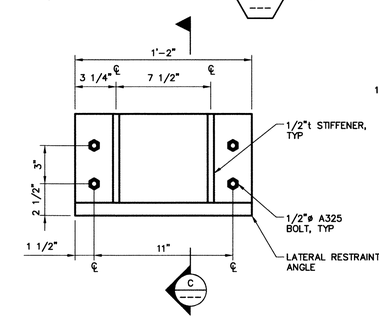

6 LATERAL RESTRAINT

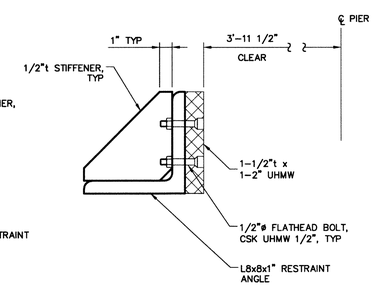

SECTION C

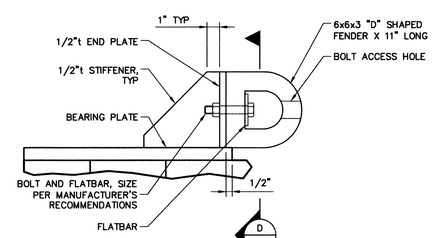

7 BUMBER

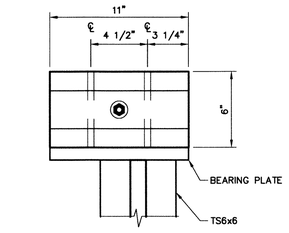

SECTION D

ALTERNATE No. 4

811 First Avenue, Suite 570
Seattle, Washington 98104
Phone: 206-624-1387
Fax: 206-624-1388
mail@pndengineers.com
PND ENGINEERS, INC.

STATE OF MAINE
DEPARTMENT OF TRANSPORTATION

PROJECT NUMBER 017812.00

PIN 017812.00

STATE OF MAINE — DAVID M. PEACE — 5407 — REGISTERED PROFESSIONAL ENGINEER

SIGNATURE	P.E. NUMBER	DATE

PROJ. MANAGER	PAUL POTTLE		
DESIGN-DETAILED	TWB	DH	09/01/04
CHECKED-REVIEWED	RJ	DP	09/01/04
DESIGN2-DETAILED2			
DESIGN3-DETAILED3			06/08/10
REVISIONS 1	P282-REBID 2010		
REVISIONS 2			
REVISIONS 3			
REVISIONS 4			
FIELD CHANGES			

CITY OF PORTLAND
OCEAN GATEWAY PIER 2 BERTH 2

PIER 2 BERTH 2
PIER C

W308-M
ALT.

9/30/04
Filename: Drawings\2010\104040.01 - Ocean Gateway Pier 2 Berth 2\100% Review\20343802-M-W308-ALT-100.dwg

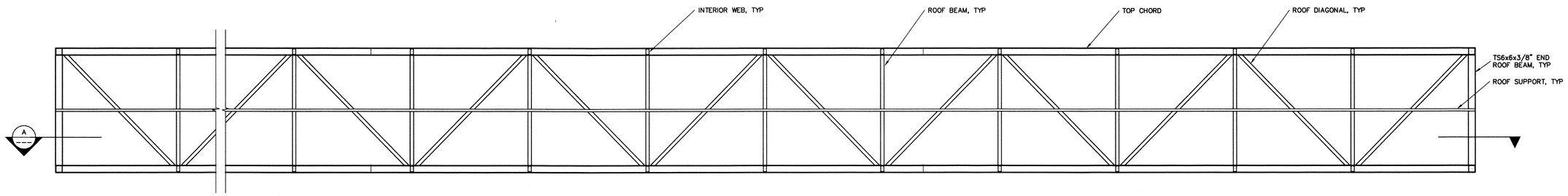

ROOF PLAN

SCALE: 1/4"=1'-0"

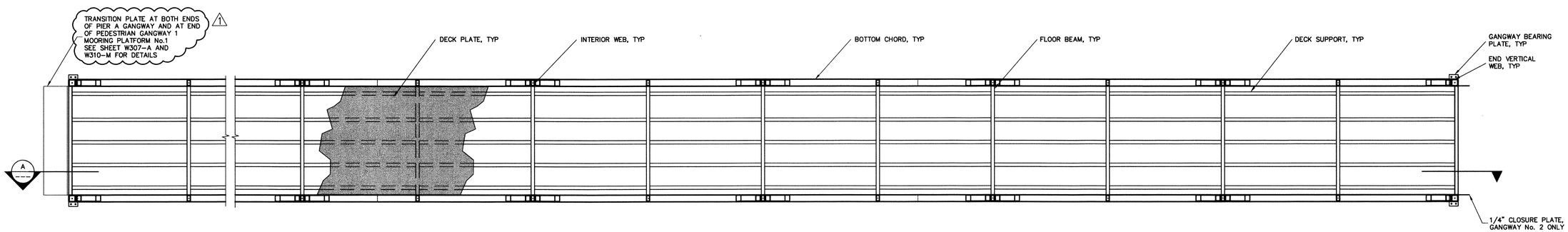

NOTE:
WELD ALL JOINTS WITH 1/4" FILLET WELD OR EQUIVALENT BEVEL WELD ALL AROUND UNLESS OTHERWISE NOTED.

FLOOR PLAN

SCALE: 1/4"=1'-0"

NOTE:
SEE SHEET W310-M FOR MEMBER SIZES AND ADDITIONAL INFORMATION.

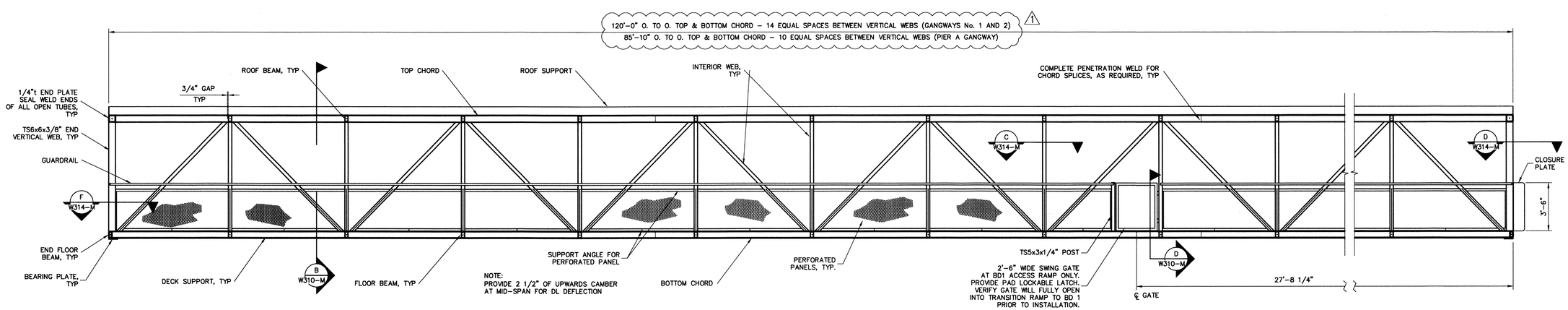

NOTE:
PROVIDE 2 1/2" OF UPWARDS CAMBER AT MID-SPAN FOR DL DEFLECTION

SECTION A

SCALE: 1/4"=1'-0"

ALTERNATE No. 4

811 First Avenue, Suite 570
Seattle, Washington 98104
Phone: 206-624-1387
Fax: 206-624-1388
mail@pnderengineers.com
PND ENGINEERS, INC.

STATE OF MAINE
DEPARTMENT OF TRANSPORTATION

PROJECT NUMBER 017812.00

PIN 017812.00

STATE OF MAINE DAVID M. PEDE 5487 REGISTERED PROFESSIONAL ENGINEER

SIGNATURE 943

P.E. NUMBER

DATE 6/8/10

		BY	DATE
PROJ. MANAGER	PAUL POTTLE		
DESIGN-DETAILED	TWB	DH	09/01/04
CHECKED-REVIEWED	RJ	DP	09/01/04
DESIGN2-DETAILED2			
DESIGN3-DETAILED3	P282-REBID 2010		06/08/10
REVISIONS 1			
REVISIONS 2			
REVISIONS 3			
REVISIONS 4			
FIELD CHANGES			

CITY OF PORTLAND
OCEAN GATEWAY PIER 2 BERTH 2

PIER 2 BERTH 2
PEDESTRIAN GANGWAYS

1

W309-M
ALT.

5/27/10
Filename: Drawings\2010\104040.01 - Ocean Gateway Pier 2 Berth 2\100% Review\203438\02-M-W309-ALT-100.dwg

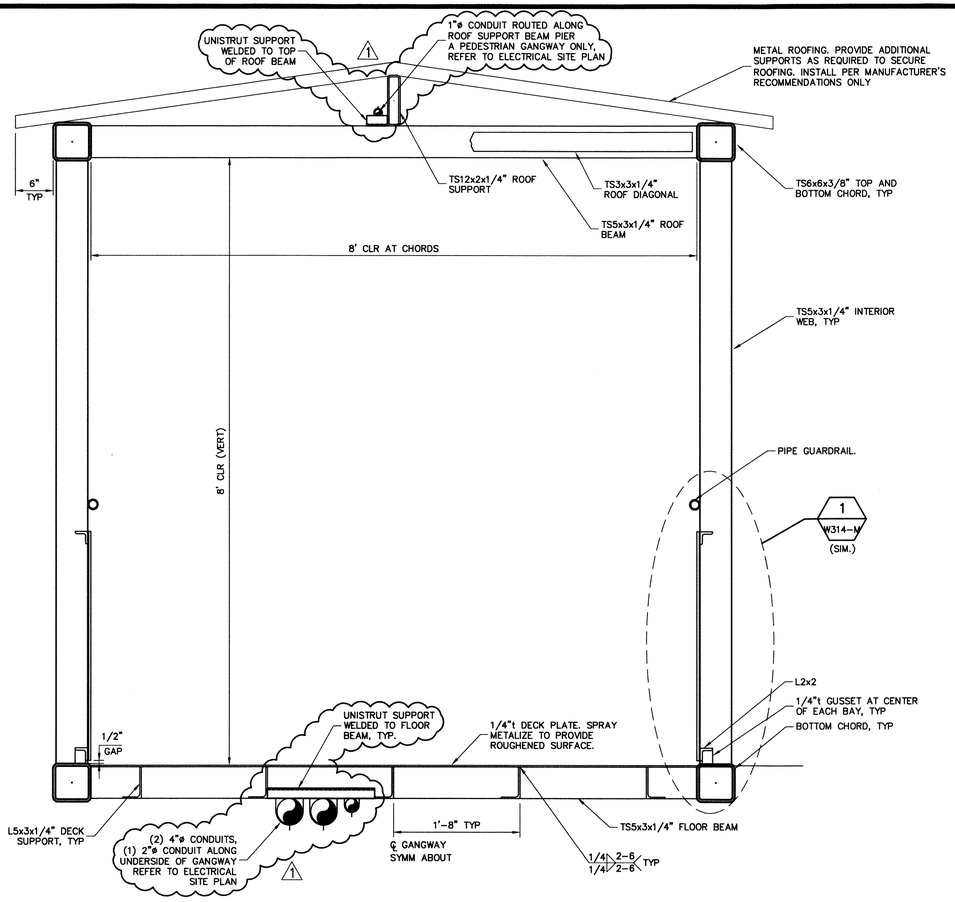

NOTE:
WELD ALL JOINTS WITH 1/4" FILLET WELD OR EQUIVALENT BEVEL WELD ALL AROUND UNLESS OTHERWISE NOTED.

SECTION B / W309-M

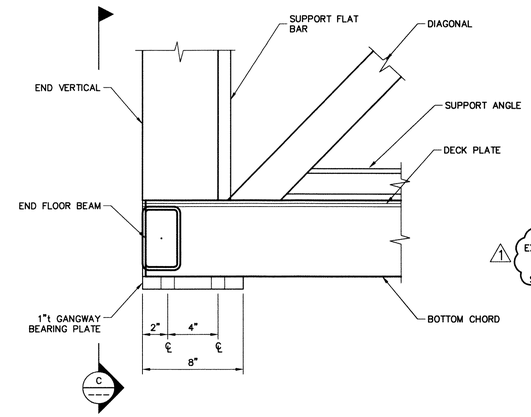

BEARING PLATE DETAIL

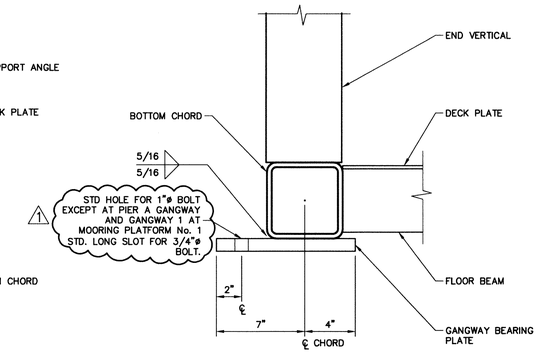

VIEW C

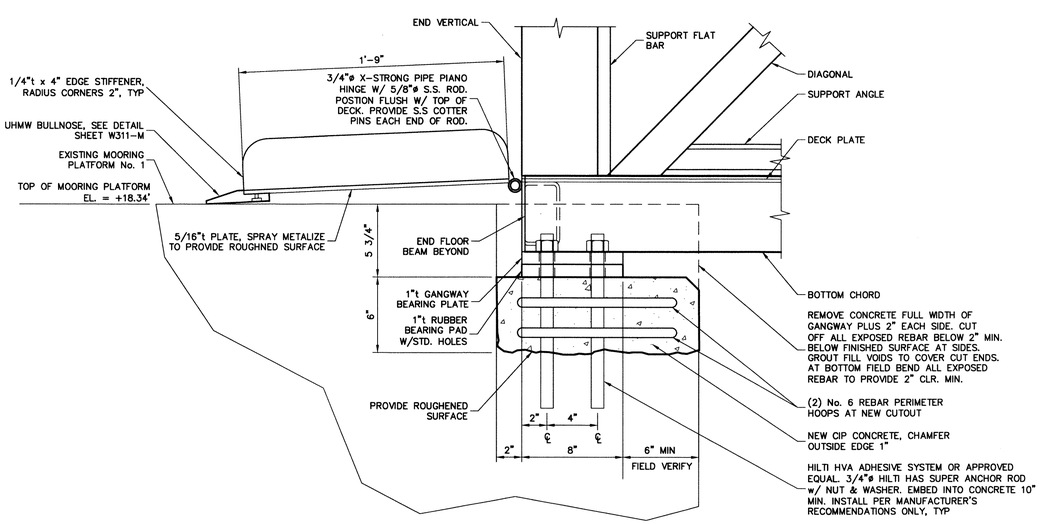

BEARING AT MOORING PLATFORM No. 1

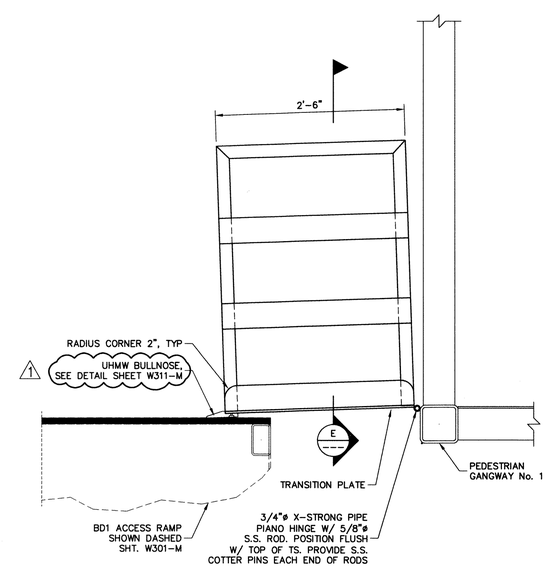

SECTION D / W-309M

NOTE: GATE NOT SHOWN FOR CLARITY

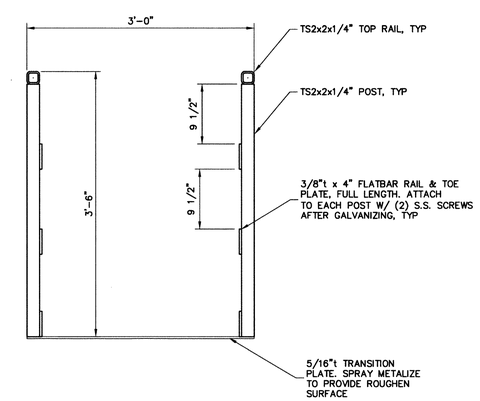

SECTION E

ALTERNATE No. 4

811 First Avenue, Suite 570
Seattle, Washington 98104
Phone: 206-624-1387
Fax: 206-624-1388
mail@pnrengineers.com
PND ENGINEERS, INC.

STATE OF MAINE
DEPARTMENT OF TRANSPORTATION

PROJECT NUMBER 017812.00

PIN 017812.00

STATE OF MAINE — DAVID M. PIERCE 9437 — REGISTERED PROFESSIONAL ENGINEER

SIGNATURE 9437 — P.E. NUMBER — DATE 6/8/10

		BY	DATE
PROJ. MANAGER	PAUL POTTLE		
DESIGN-DETAILED	TWB	DH	09/01/04
CHECKED-REVIEWED	RJ	DP	09/01/04
DESIGN2-DETAILED2			
DESIGN3-DETAILED3			
REVISIONS 1	P282-REBID 2010		06/08/10
REVISIONS 2			
REVISIONS 3			
REVISIONS 4			
FIELD CHANGES			

CITY OF PORTLAND
OCEAN GATEWAY PIER 2 BERTH 2

PIER 2 BERTH 2
PEDESTRIAN GANGWAY DETAILS

W310-M
ALT.

5/28/10
Filename: Drawings\2010\104040.01 - Ocean Gateway Pier 2 Berth 2\100% Review\20343802-M-W310-ALT-100.dwg

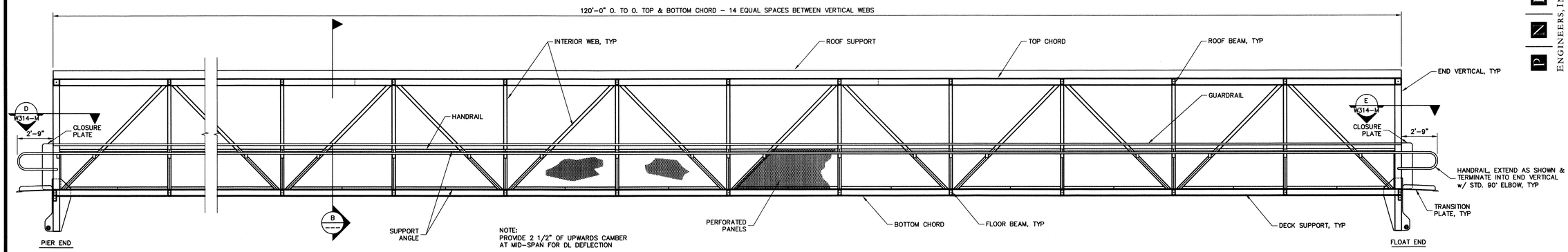

NOTE:
FOR DETAILS NOT SHOWN SEE PEDESTRIAN GANGWAYS 1 & 2 SHEETS.

SECTION A W309-M (SIM)
SCALE: 1/4"=1'-0"

NOTE:
WELD ALL JOINTS WITH 1/4" FILLET WELD OR EQUIVALENT BEVEL WELD ALL AROUND UNLESS OTHERWISE NOTED.

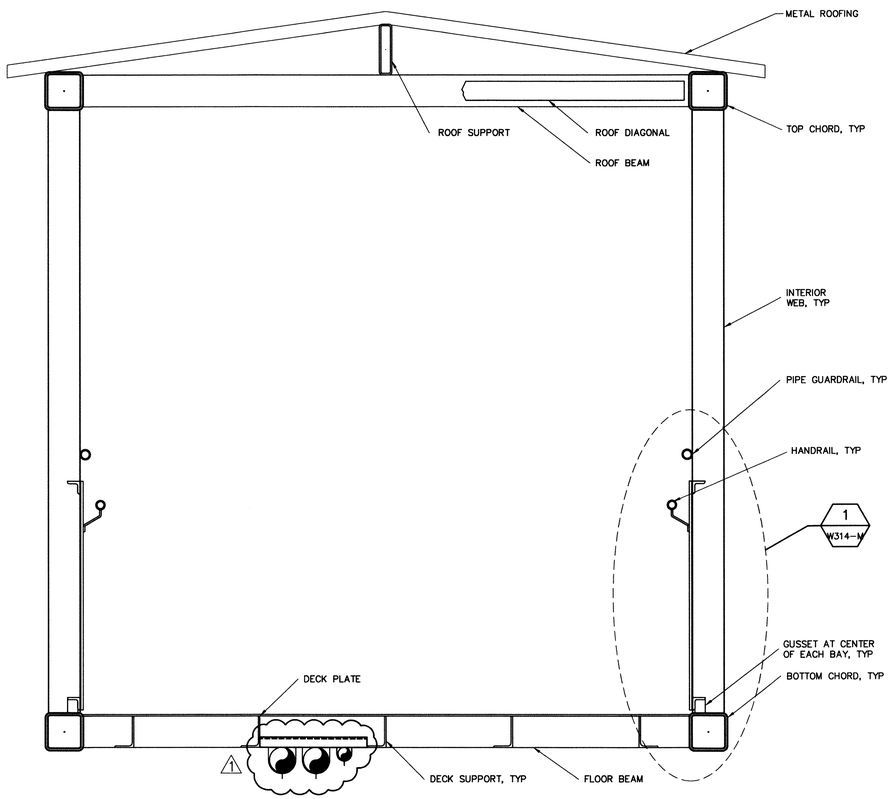

SECTION B ---
SCALE: 1"=1'-0"

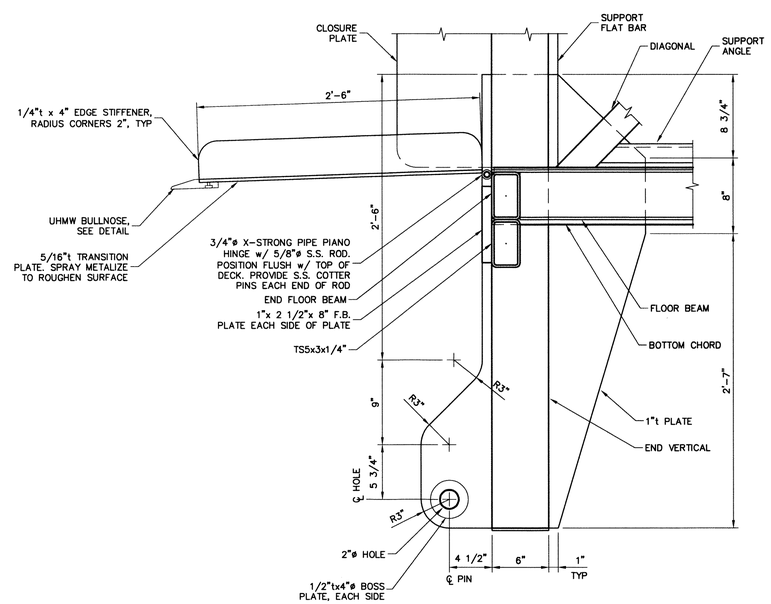

2 PIER/FLOAT END DETAIL ---

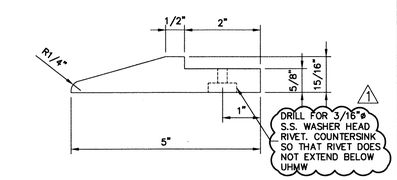

3 BULLNOSE ---

ALTERNATE No. 4

811 First Avenue, Suite 570
Seattle, Washington 98104
Phone: 206-624-1387
Fax: 206-624-1388
mail@pndengineers.com
PND ENGINEERS, INC.

STATE OF MAINE
DEPARTMENT OF TRANSPORTATION

PROJECT NUMBER 017812.00

PIN 017812.00

STATE OF MAINE DAVID M. PAGE 9457 REGISTERED PROFESSIONAL ENGINEER

SIGNATURE		
P.E. NUMBER 9457		
DATE 6/8/10		

PROJ. MANAGER	PAUL POTTLE		
DESIGN-DETAILED	TWB	DH	09/01/04
CHECKED-REVIEWED	RJ	DP	09/01/04
DESIGN2-DETAILED2			
DESIGN3-DETAILED3		P2B2-REBID 2010	06/08/10
REVISIONS 1			
REVISIONS 2			
REVISIONS 3			
REVISIONS 4			
FIELD CHANGES			

CITY OF PORTLAND
OCEAN GATEWAY PIER 2 BERTH 2

PIER 2 BERTH 2
PEDESTRIAN GANGWAY 3

W311-M
ALT.

9/30/04
Filename: Drawings\2010\104040.01 - Ocean Gateway Pier 2 Berth 2\100% Review\20343802-M-W311-ALT-100.dwg

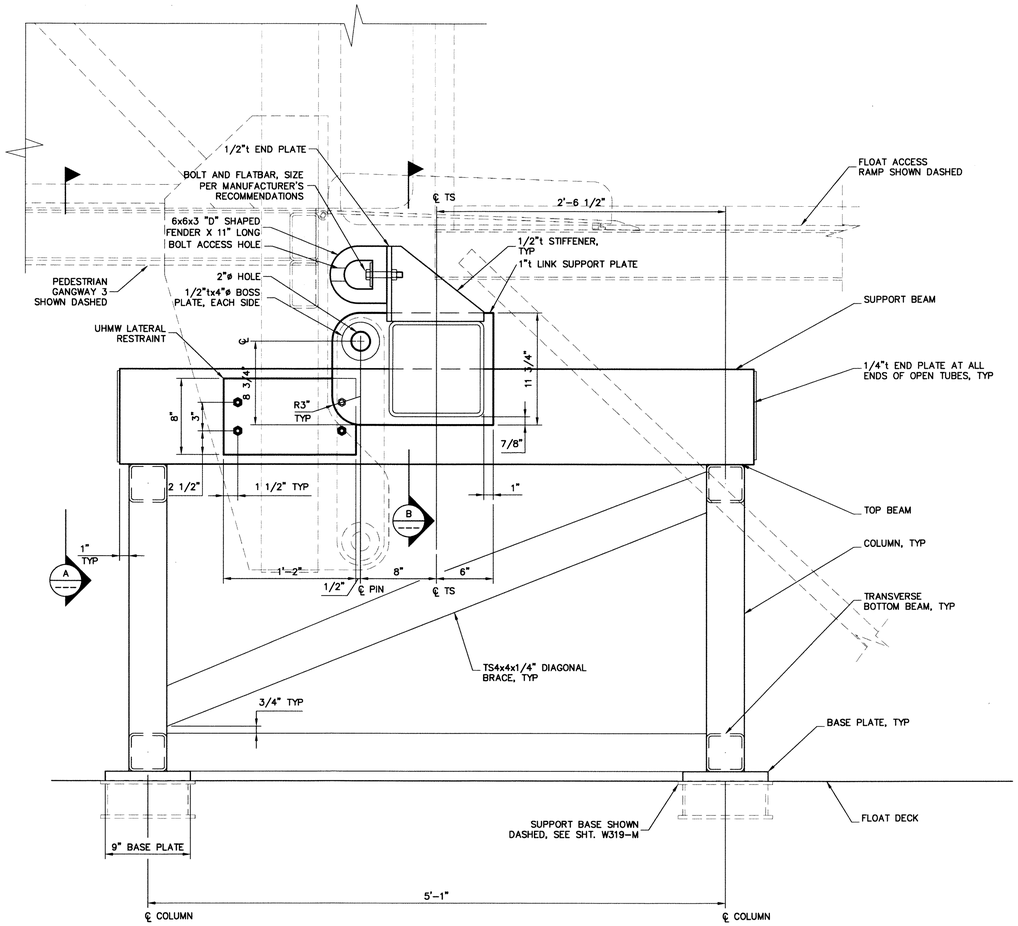

SOUTH ELEVATION

SCALE: 1 1/2"=1'-0"

NOTE:
WELD ALL JOINTS WITH 5/16" FILLET WELD OR EQUIVALENT BEVEL WELD ALL AROUND UNLESS OTHERWISE NOTED.

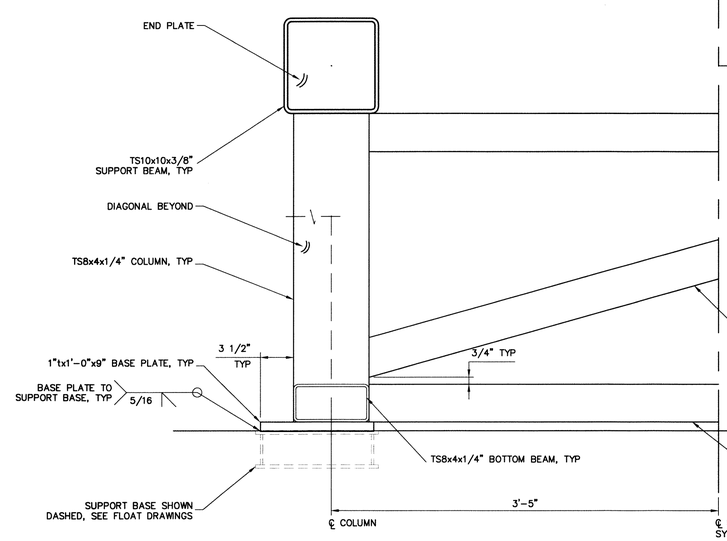

SECTION A

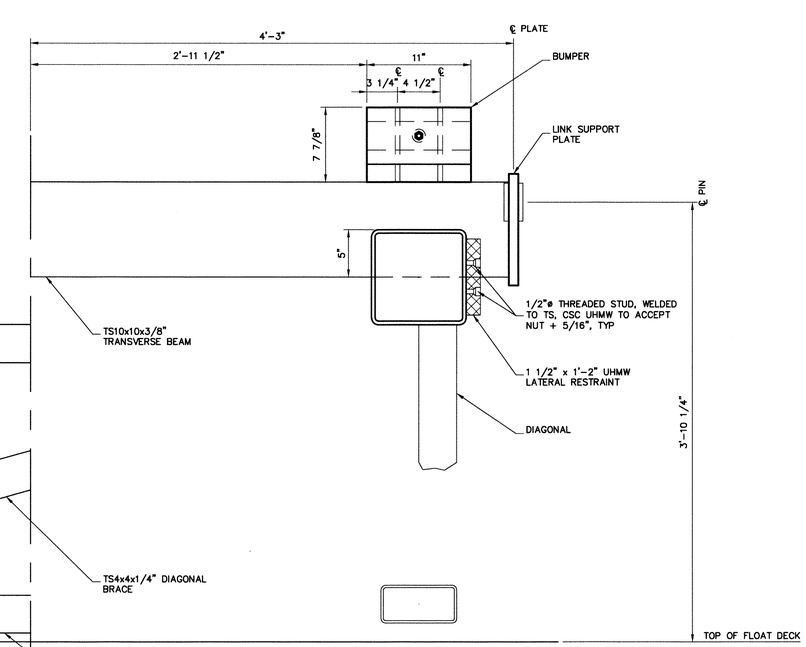

SECTION B

ALTERNATE No. 4

811 First Avenue, Suite 570
Seattle, Washington 98104
Phone: 206-624-1387
Fax: 206-624-1388
mail@pndengineers.com
PND ENGINEERS, INC.

STATE OF MAINE
DEPARTMENT OF TRANSPORTATION

PROJECT NUMBER 017812.00

PIN 017812.00

STATE OF MAINE — DAVID M. PIERCE 9437 — REGISTERED PROFESSIONAL ENGINEER

SIGNATURE	9437	
P.E. NUMBER	6/8/10	
DATE		

		BY	DATE
PROJ. MANAGER	PAUL POTTLE		
DESIGN-DETAILED	TWB	DH	09/01/04
CHECKED-REVIEWED	RJ	DP	09/01/04
DESIGN2-DETAILED2			
DESIGN3-DETAILED3			
REVISIONS 1	P282-REBID 2010		05/08/10
REVISIONS 2			
REVISIONS 3			
REVISIONS 4			
FIELD CHANGES			

CITY OF PORTLAND
OCEAN GATEWAY PIER 2 BERTH 2

PIER 2 BERTH 2
GANGWAY LANDING PLATFORM

W312-M
ALT.

9/30/04
Filename: Drawings\2010\104040.01 - Ocean Gateway Pier 2 Berth 2\100% Review\20343802-M-W312-ALT-100.dwg

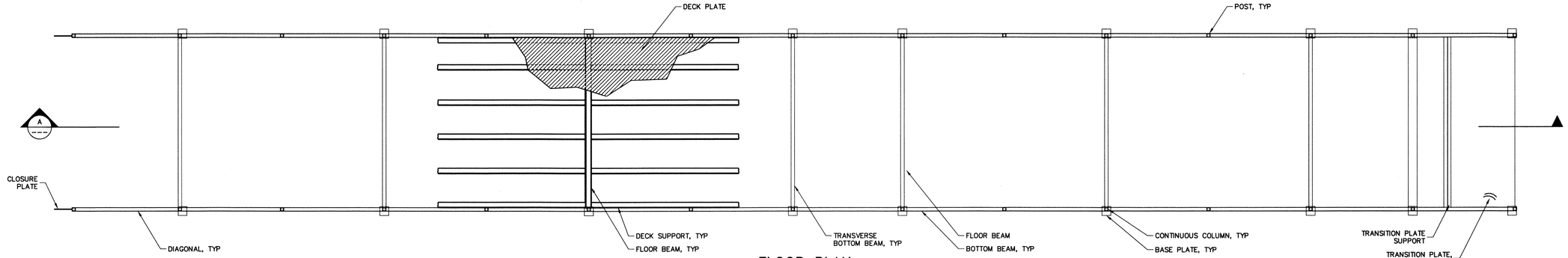

FLOOR PLAN

SCALE: 3/8" = 1'-0"

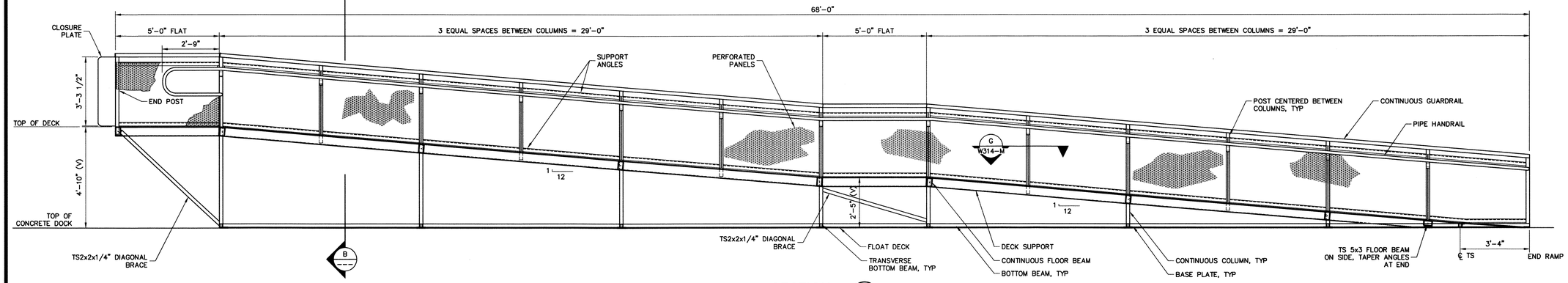

SECTION A

SCALE: 3/8"=1'-0"

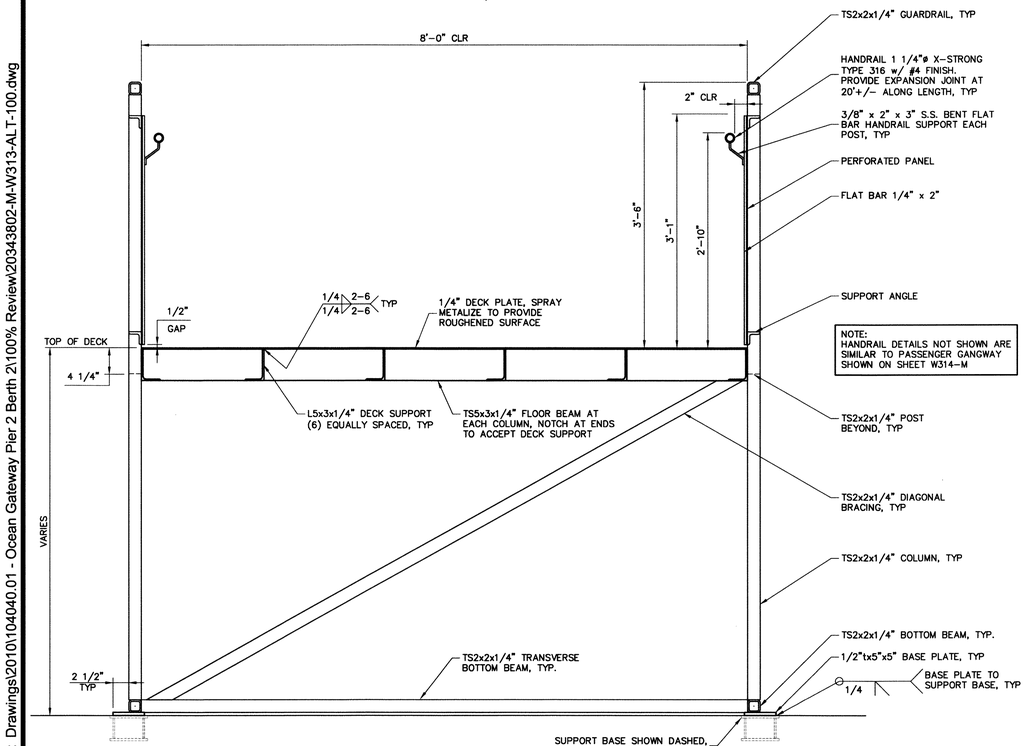

NOTE:
HANDRAIL DETAILS NOT SHOWN ARE SIMILAR TO PASSENGER GANGWAY SHOWN ON SHEET W314-M

SECTION B

SCALE: 1"=1'-0"

NOTE:
WELD ALL JOINTS WITH 1/4" FILLET WELD OR EQUIVALENT BEVEL WELD ALL AROUND UNLESS OTHERWISE NOTED.

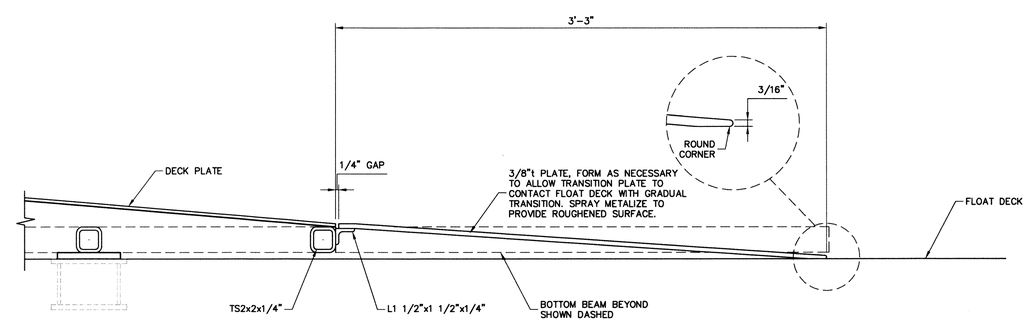

TRANSITION PLATE

ALTERNATE No. 4

PND ENGINEERS, INC.
811 First Avenue, Suite 570
Seattle, Washington 98104
Phone: 206-624-1387
Fax: 206-624-1388
mail@pndengineers.com

STATE OF MAINE
DEPARTMENT OF TRANSPORTATION

PROJECT NUMBER 017812.00

PIN 017812.00

STATE OF MAINE DAVID M. PAGE 9457 REGISTERED PROFESSIONAL ENGINEER

SIGNATURE 9457	P.E. NUMBER	DATE

PROJ. MANAGER PAUL POTTLE		
DESIGN-DETAILED	TWB	08/01/04
CHECKED-REVIEWED	DH	08/01/04
DESIGN2-DETAILED2	RJ	08/01/04
DESIGN3-DETAILED3	DP	08/01/04
REVISIONS 1	P282-REBID 2010	06/08/10
REVISIONS 2		
REVISIONS 3		
REVISIONS 4		
FIELD CHANGES		

CITY OF PORTLAND
OCEAN GATEWAY PIER 2 BERTH 2

PIER 2 BERTH 2
FLOAT ACCESS RAMP

W313-M
ALT.

8/30/04
Filename: Drawings\2010\104040.01 - Ocean Gateway Pier 2 Berth 2\100% Review\20343802-M-W313-ALT-100.dwg

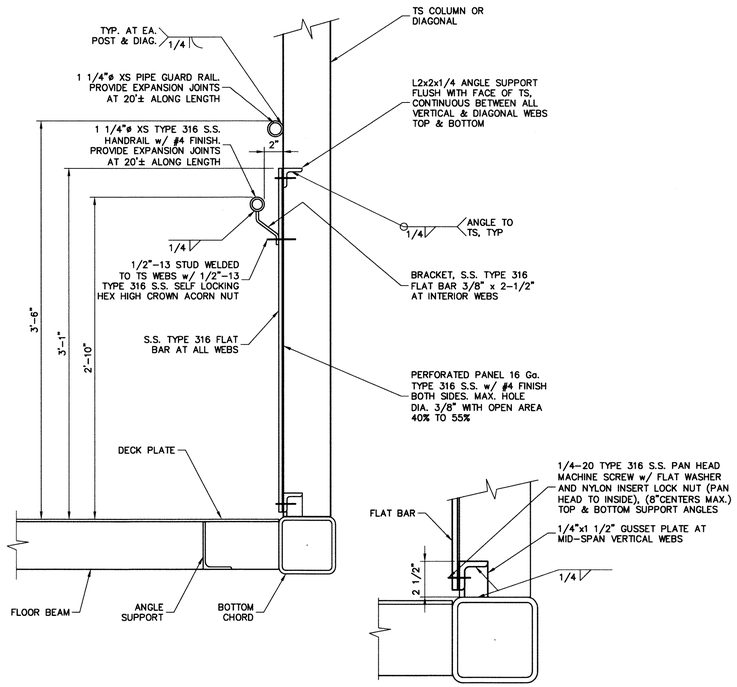

1 W311-M HANDRAIL

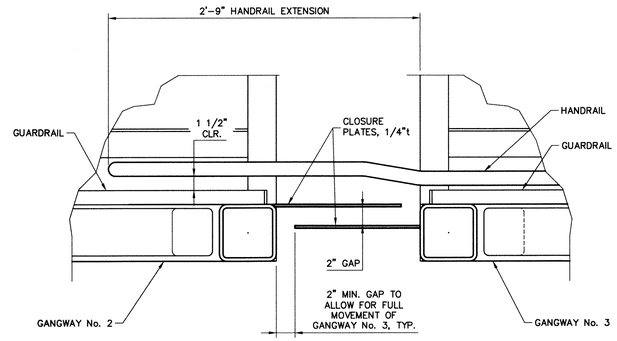

SECTION D W309-M (W311-M)

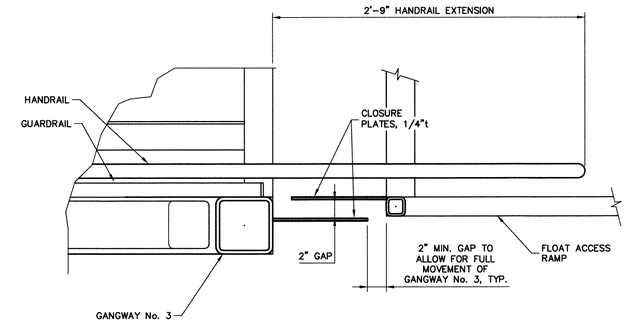

SECTION E W311-M

NOTE:
WELD ALL JOINTS WITH 3/16" FILLET WELD, OR EQUIVALENT BEVEL WELD ALL AROUND UNLESS NOTED OTHERWISE.

AFTER INSTALLATION, FIELD VERIFY THAT ALL OPENINGS TO 3'-6" ABOVE DECK DO NOT ALLOW A 4"ø SPHERE TO PASS THROUGH. PROVIDE ADDITIONAL BARRIER AS REQUIRED.

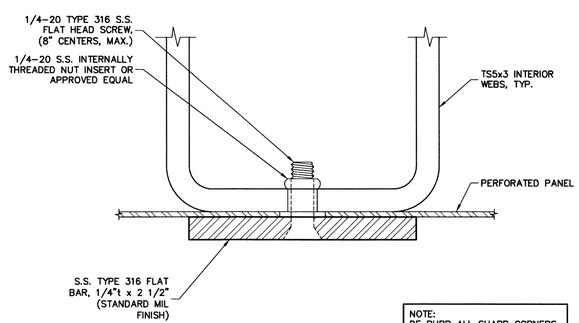

NOTE:
DE BURR ALL SHARP CORNERS. USE A SEALANT IN ALL SCREW HOLES INTO STEEL TUBES TO PREVENT MOISTURE COLLECTION.

SECTION C W309-M

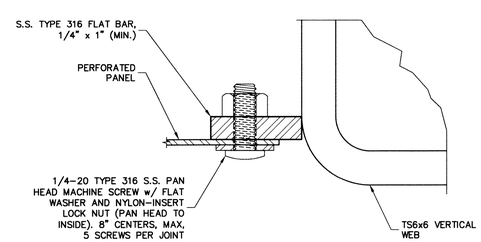

SECTION F W309-M

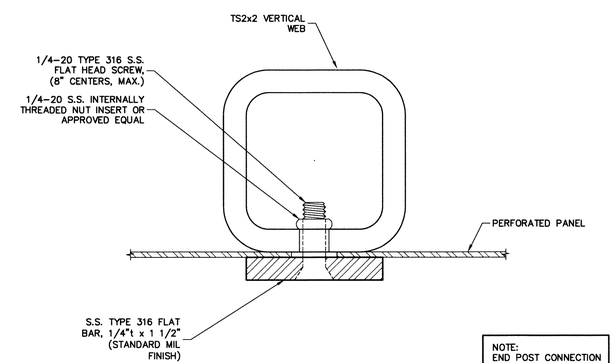

NOTE:
END POST CONNECTION SIMILAR.

SECTION G W313-M

ALTERNATE No. 4

811 First Avenue, Suite 570
Seattle, Washington 98104
Phone: 206-624-1387
Fax: 206-624-1388
mail@pndengineers.com
PND ENGINEERS, INC.

STATE OF MAINE
DEPARTMENT OF TRANSPORTATION
PROJECT NUMBER 017812.00
PIN 017812.00

STATE OF MAINE DAVID M. PERRY 9437 REGISTERED PROFESSIONAL ENGINEER

SIGNATURE	9437	
P.E. NUMBER		
DATE	6/8/10	

PROJ. MANAGER	PAUL POTTLE	
DESIGN-DETAILED	TWB	DH
CHECKED-REVIEWED	RJ	DP
DESIGN2-DETAILED2		
DESIGN3-DETAILED3		
REVISIONS 1	P282-REBID 2010	06/08/10
REVISIONS 2		
REVISIONS 3		
REVISIONS 4		
FIELD CHANGES		

CITY OF PORTLAND
OCEAN GATEWAY PIER 2 BERTH 2

PIER 2 BERTH 2 - GANGWAY & ACCESS RAMP HANDRAIL DETAILS

W314-M
ALT.

9/30/04
Filename: Drawings\2010\104040.01 - Ocean Gateway Pier 2 Berth 2\100% Review\20343802-M-W314-ALT-100.dwg

BARGE MAIN DIMENSIONS		
LENGTH OVERALL	– LOA	124FT
BEAM	– B	46FT
DEPTH	– D	10FT

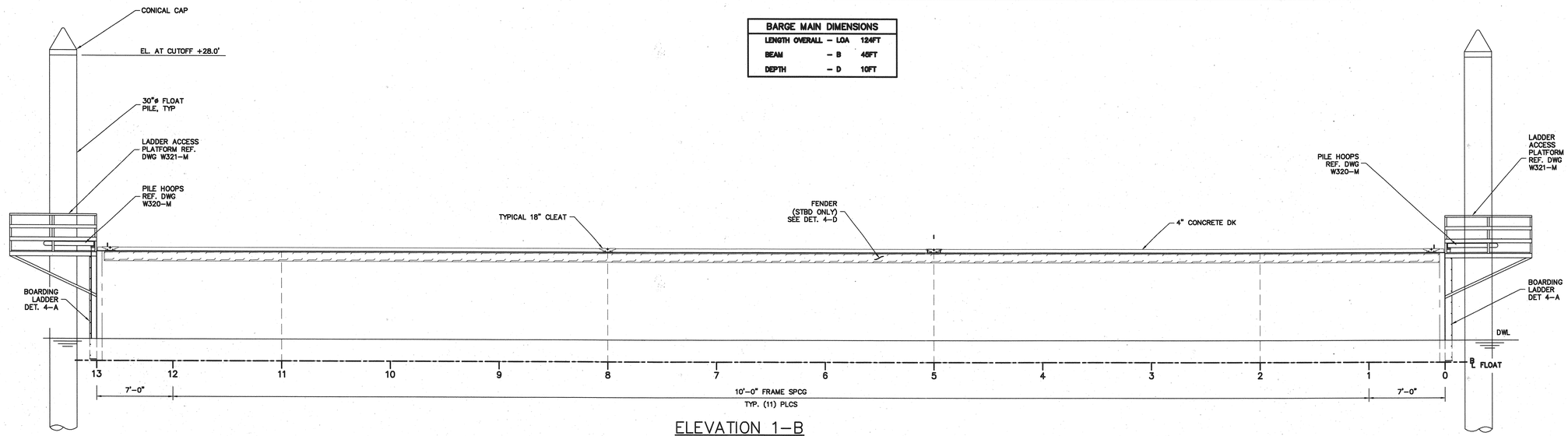

ELEVATION 1-B
STARBOARD PROFILE
3/16" = 1'-0"

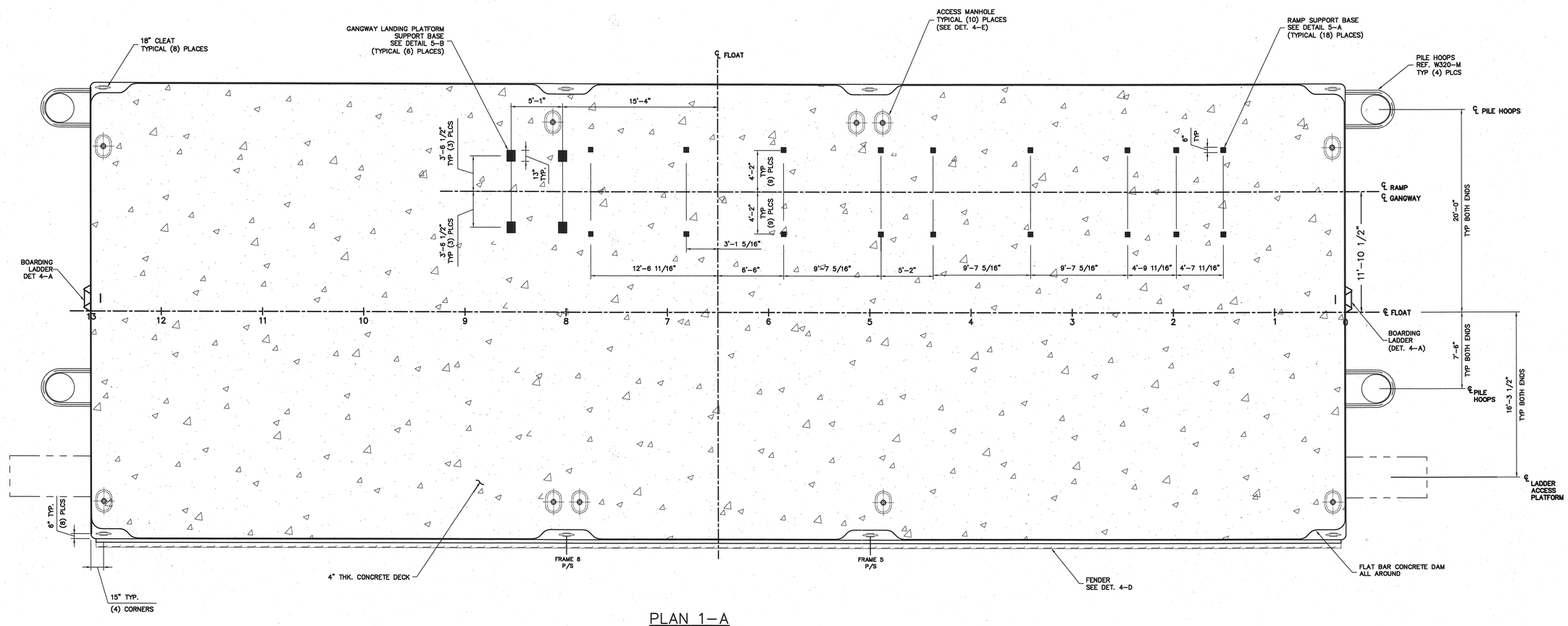

PLAN 1-A
MAIN DECK LAYOUT
3/16" = 1'-0"

ALTERNATE No. 4

9/30/04
Filename: 20343802-M-W315-ALT-100

THE GLOSTEN ASSOCIATES
Consulting Engineers Serving the Maritime Community
1201 Western Avenue, Suite 200
Seattle, Washington 98101-3021
TEL | 206-624-7830
FAX | 206-682-3117
WEB | www.glosten.com

STATE OF MAINE
DEPARTMENT OF TRANSPORTATION
PROJECT NUMBER 009215.00
PIN 009215.00

STATE OF MAINE
BRIAN C. LEE
10647
REGISTERED PROFESSIONAL ENGINEER

SIGNATURE	P.E. NUMBER	DATE
	10647	

	BY	DATE
PROJ. MANAGER PAUL POTTLE		
DESIGN-DETAILED	RBL	02/25/04
CHECKED-REVIEWED	JTB	03/15/04
DESIGN2-DETAILED2	RBL	08/13/04
DESIGN3-DETAILED3		
REVISIONS 1		
REVISIONS 2		
REVISIONS 3		
REVISIONS 4		
FIELD CHANGES		

CITY OF PORTLAND
OCEAN GATEWAY PHASE 1

PIER 2 BERTH 2
FLOAT PLAN & ELEVATION

W315-M
ALT.

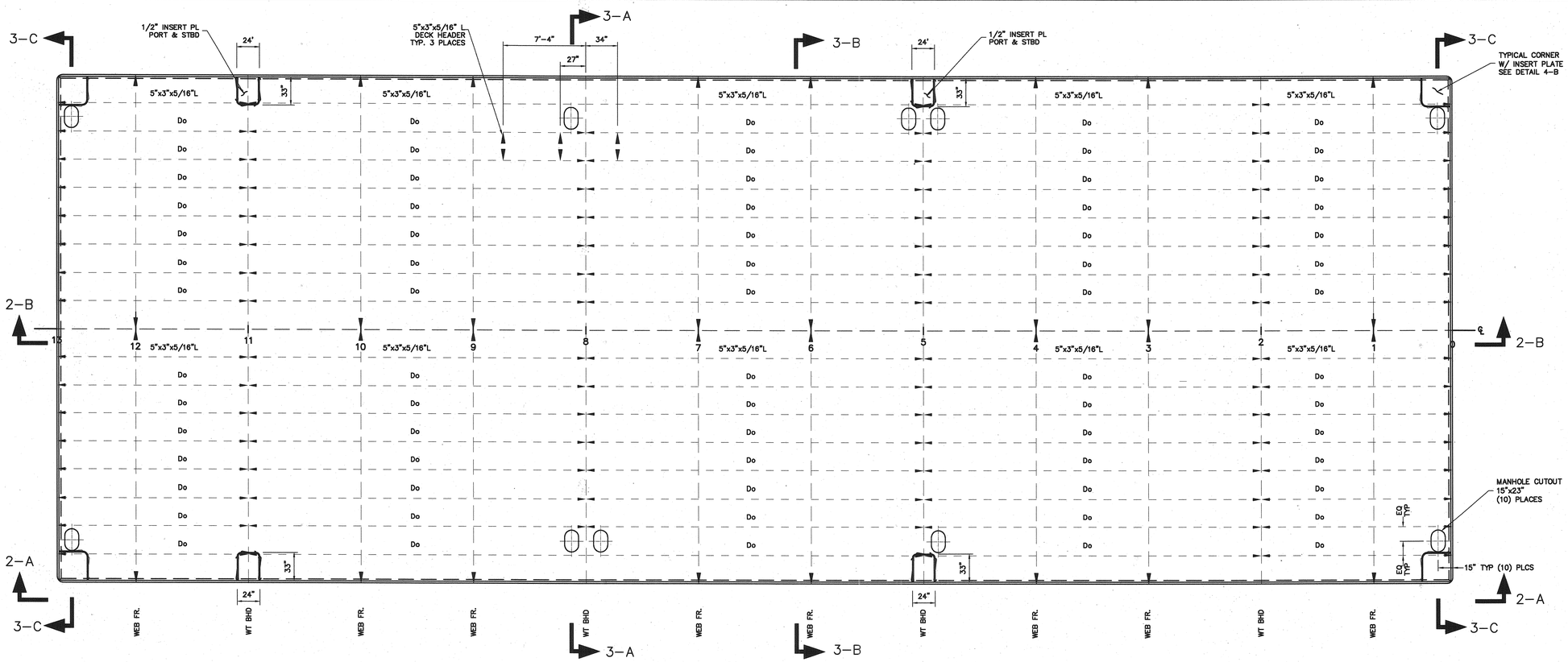

PLAN 2-C

DECK STRUCTURAL LAYOUT

3/16" = 1'-0"

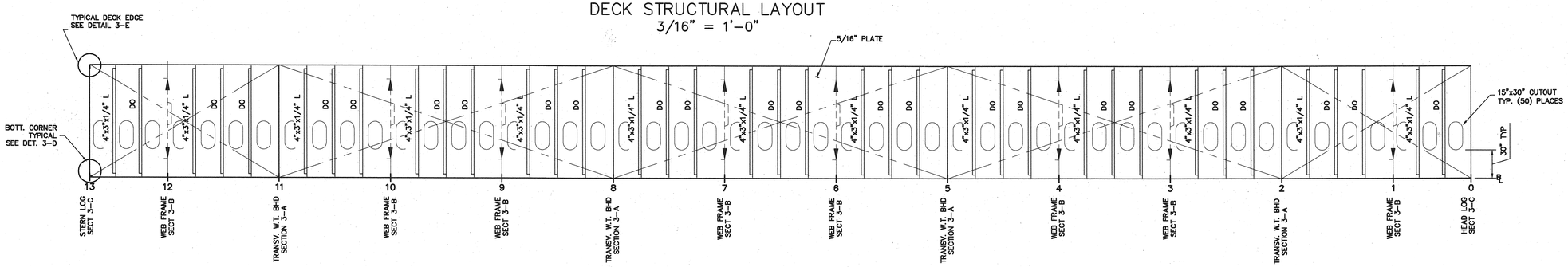

ELEVATION 2-B

CENTERLINE N.T. BULKHEAD STRUCTURAL LAYOUT - LKG PORT

3/16" = 1'-0"

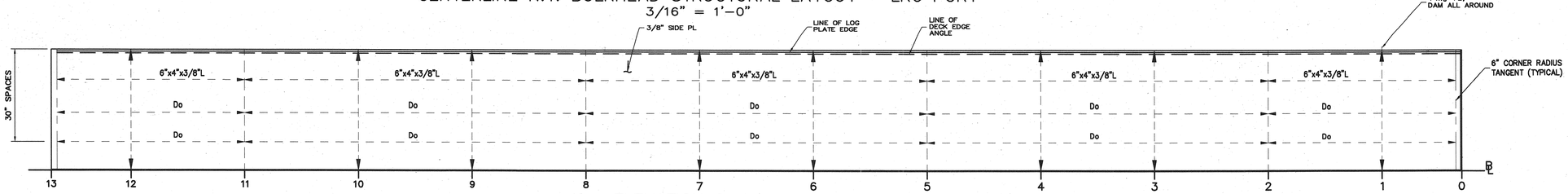

ELEVATION 2-A

STBD SIDE STRUCTURAL LAYOUT (PORT MIRRORED)

3/16" = 1'-0"

ALTERNATE No. 4

THE GLOSTEN ASSOCIATES
Consulting Engineers Serving the Maritime Community
1201 Western Avenue, Suite 200
Seattle, Washington 98101-2921
TEL 206.624.7850
FAX 206.682.9117
WEB www.glosten.com

STATE OF MAINE
DEPARTMENT OF TRANSPORTATION

PROJECT NUMBER 009215.00

PIN 009215.00

STATE OF MAINE NICHOLAS J. PRINCE 10547 REGISTERED PROFESSIONAL ENGINEER

PROJ. MANAGER	PAUL POTTLE	BY	DATE
DESIGN-DETAILED	RBL		02/25/04
CHECKED-REVIEWED	JTB		03/16/04
DESIGN2-DETAILED2	RBL		08/12/04
DESIGN3-DETAILED3			
REVISIONS 1			
REVISIONS 2			
REVISIONS 3			
REVISIONS 4			
FIELD CHANGES			

SIGNATURE

P.E. NUMBER 10547

DATE 10-8-04

CITY OF PORTLAND
OCEAN GATEWAY PHASE 1

PIER 2 BERTH 2
STRUCTURAL PLAN & ELEVATION

W316-M
ALT.

9/30/04
Filename: 20343802-M-W316-ALT-100

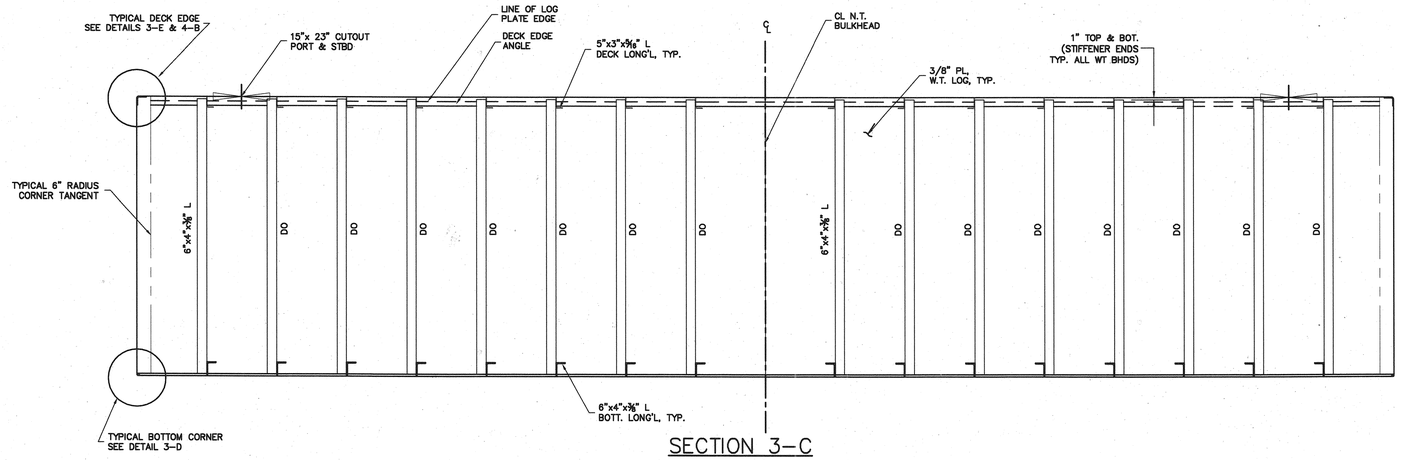

SECTION 3–C

TYP. TRANSVERSE LOG STRUCTURE – LKG FROM MIDSHIPS

1/2" = 1'–0"

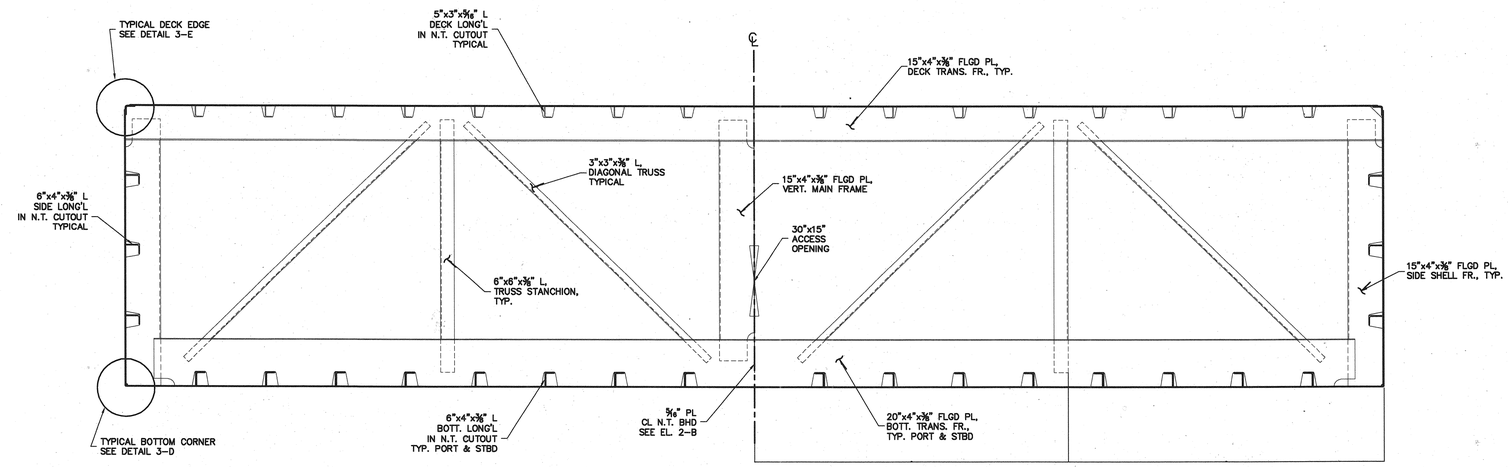

SECTION 3–B

TYP. TRANSVERSE WEB FRAME STRUCTURE – LKG FWD

1/2" = 1'–0"

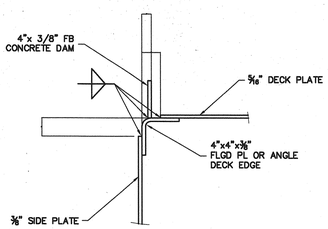

DETAIL 3–E

TYPICAL DECK EDGE

2" = 1'–0"

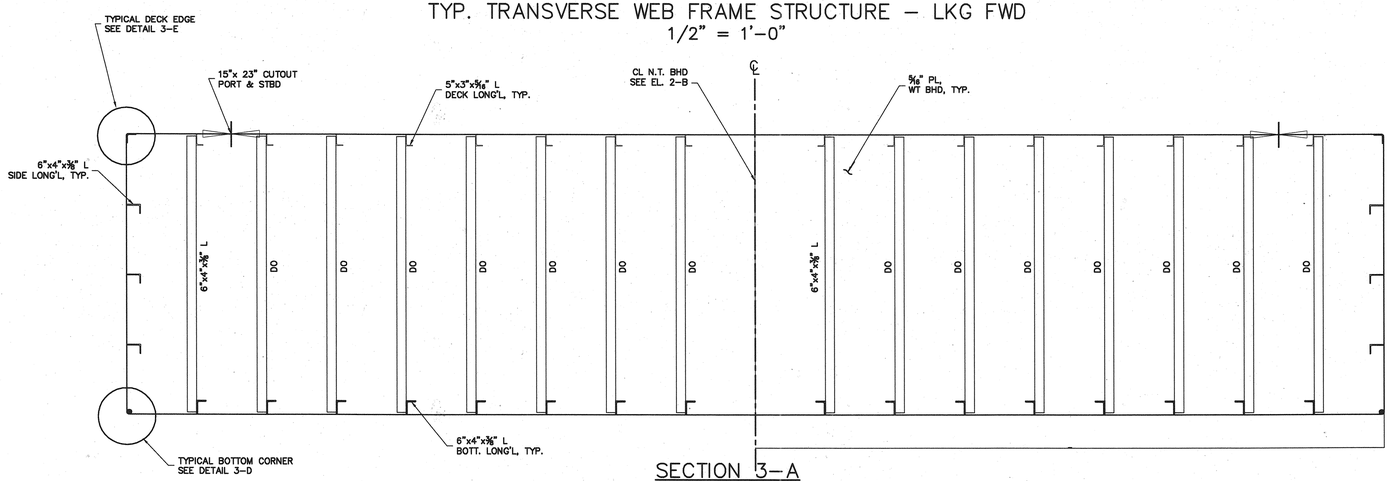

SECTION 3–A

TYP. TRANSVERSE W.T. BHD STRUCTURE – LKG FWD

1/2" = 1'–0"

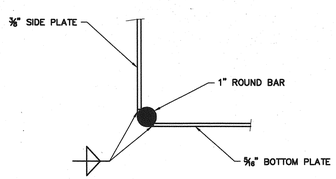

DETAIL 3–D

TYPICAL BOTTOM CORNER

2" = 1'–0"

ALTERNATE No. 4

9/30/04
Filename: 20343802-M-W317-ALT-100

THE GLOSTEN ASSOCIATES
Consulting Engineers Serving the Marine Community
1201 Western Avenue, Suite 200
Seattle, Washington 98101-2921
TEL 206.624.7730
FAX 206.682.9117
WEB www.glosten.com

STATE OF MAINE
DEPARTMENT OF TRANSPORTATION

PROJECT NUMBER 009215.00

PIN
009215.00

STATE OF MAINE
GARY E. MARTIN
No. 10547
REGISTERED PROFESSIONAL ENGINEER

SIGNATURE		
P.E. NUMBER 10547		
DATE		

PROJ. MANAGER PAUL POTTLE			
		BY	DATE
DESIGN–DETAILED	RBL		02/25/04
CHECKED–REVIEWED	JTB		03/16/04
DESIGN2–DETAILED2	RBL		06/12/04
DESIGN3–DETAILED3			
REVISIONS 1			
REVISIONS 2			
REVISIONS 3			
REVISIONS 4			
FIELD CHANGES			

CITY OF PORTLAND
OCEAN GATEWAY PHASE 1

PIER 2 BERTH 2
SECTIONS

W317-M
ALT.

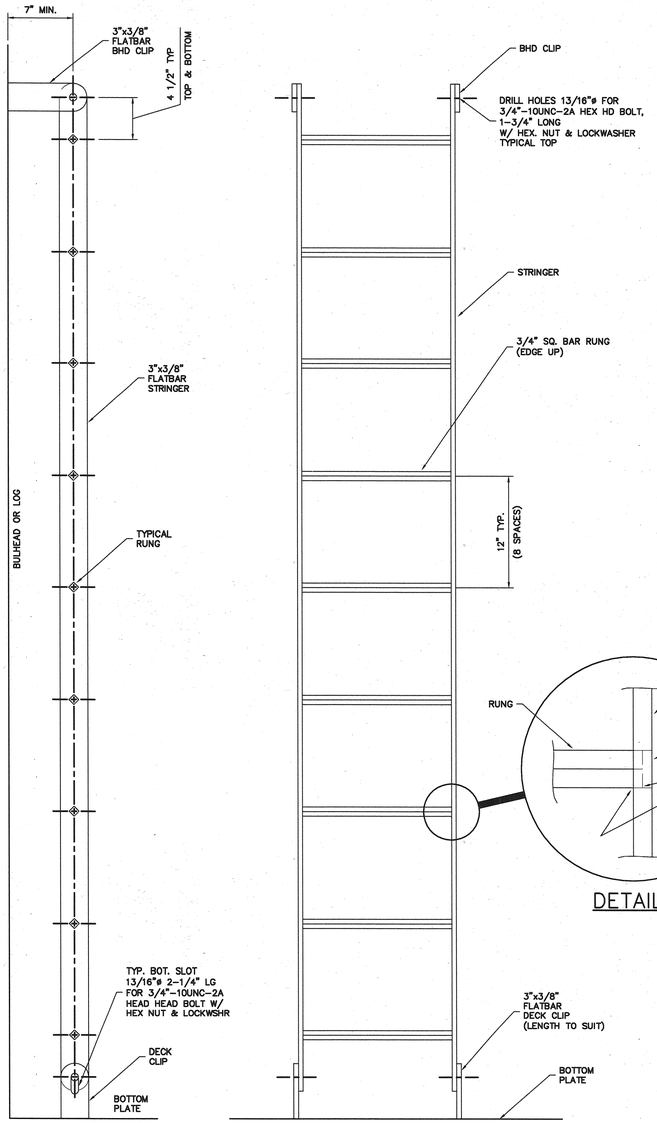

DETAIL 4-C
TYPICAL ACCESS LADDER
NOT TO SCALE

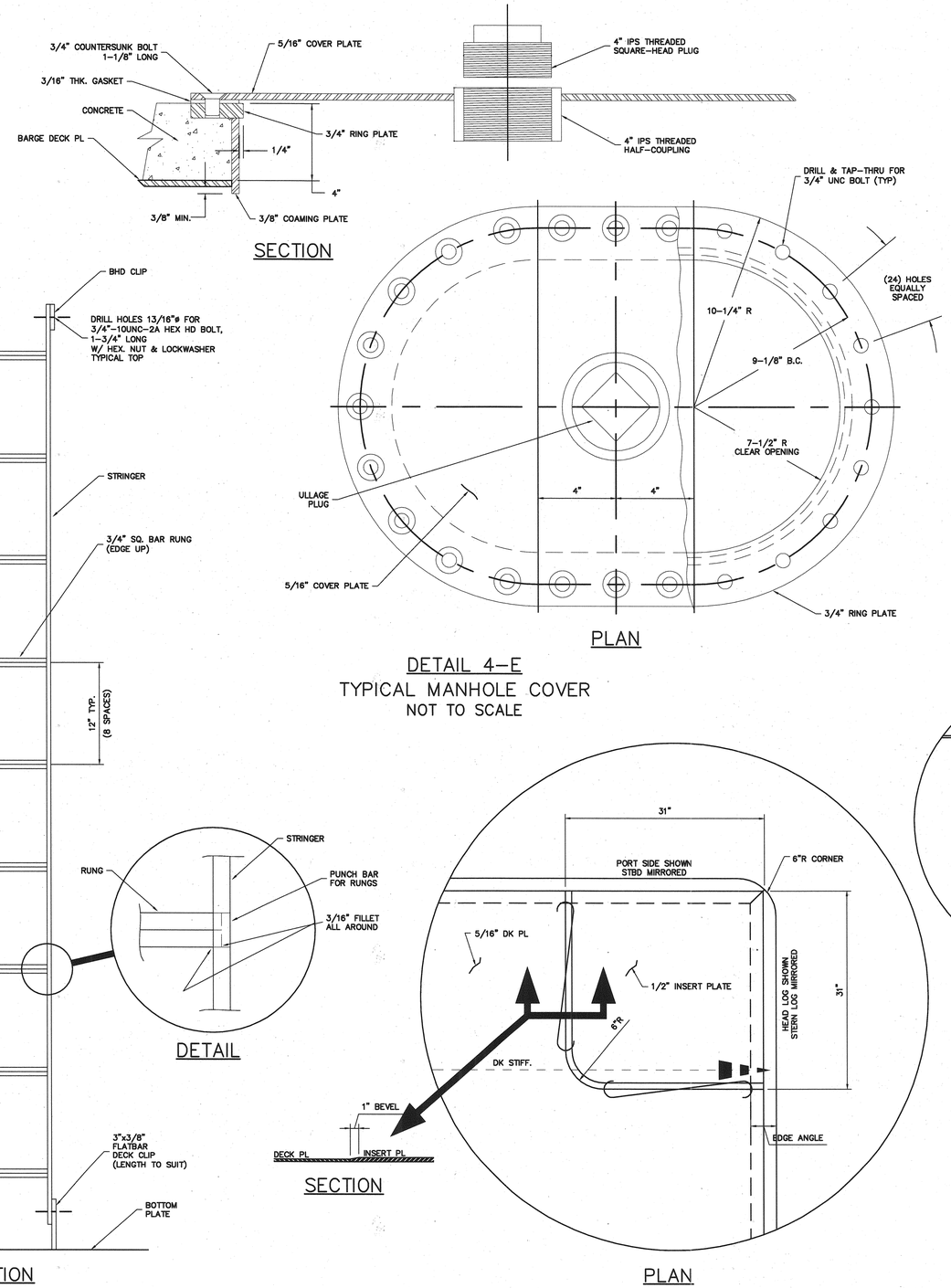

DETAIL 4-E
TYPICAL MANHOLE COVER
NOT TO SCALE

DETAIL 4-B
TYPICAL BARGE CORNER
NOT TO SCALE

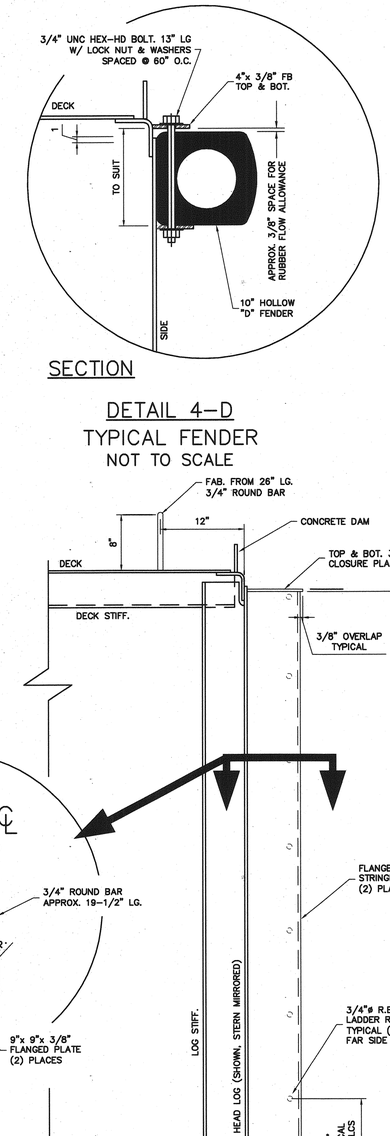

DETAIL 4-D
TYPICAL FENDER
NOT TO SCALE

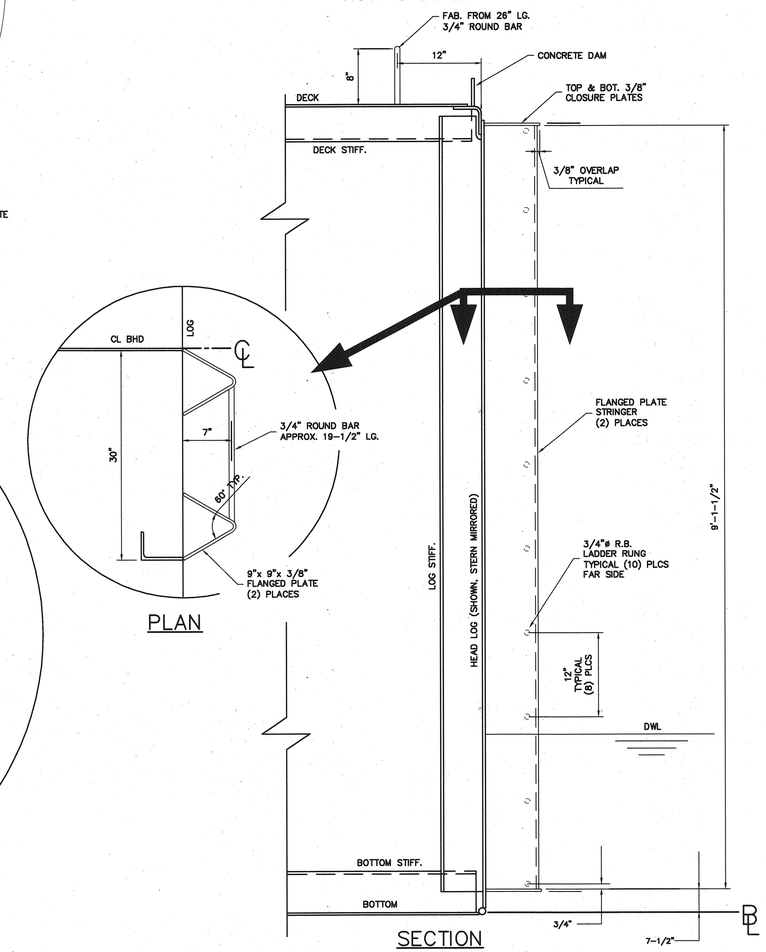

DETAIL 4-A
TYPICAL BOARDING LADDER (2 PLCS)
NOT TO SCALE

ALTERNATE No. 4

THE GLOSTEN ASSOCIATES
Consulting Engineers Serving the Marine Community
1201 Western Avenue, Suite 200
Seattle, Washington 98101-2321
TEL 206.624.7930
FAX 206.624.0177
WEB www.glosten.com

STATE OF MAINE
DEPARTMENT OF TRANSPORTATION

PROJECT NUMBER 009215.00

PIN 009215.00

STATE OF MAINE THOMAS J. BRINGLOE 10647 REGISTERED PROFESSIONAL ENGINEER

SIGNATURE		
P.E. NUMBER	10647	
DATE		

PROJ. MANAGER PAUL POTTLE		BY	DATE
DESIGN-DETAILED	RBL		02/25/04
CHECKED-REVIEWED	JTB		03/16/04
DESIGN2-DETAILED2	RBL		08/12/04
DESIGN3-DETAILED3			
REVISIONS 1			
REVISIONS 2			
REVISIONS 3			
REVISIONS 4			
FIELD CHANGES			

CITY OF PORTLAND
OCEAN GATEWAY PHASE 1

PIER 2 BERTH 2
DETAILS

W318-M
ALT.

9/30/04
Filename: 20343802-M-W318-ALT-100

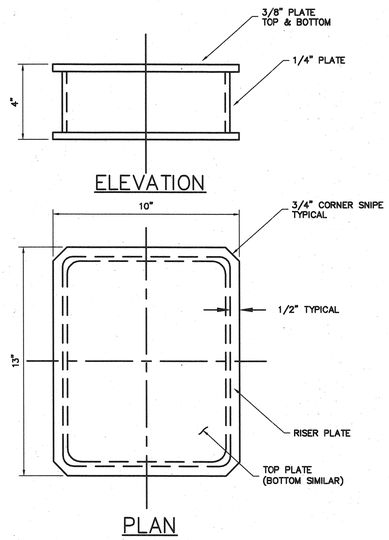

DETAIL 5–B
TYPICAL GANGWAY PLATFORM RISER PAD (6 REQ'D)
NOT TO SCALE

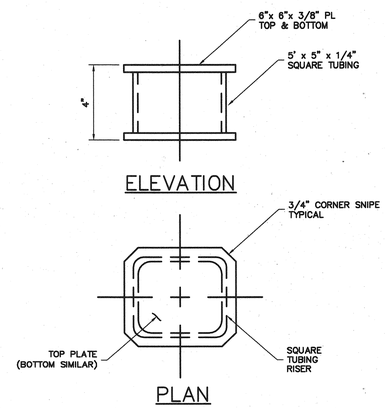

DETAIL 5–A
TYPICAL RAMP RISER PAD (18 REQ'D)
NOT TO SCALE

ALTERNATE No. 4

THE GLOSTEN ASSOCIATES
Consulting Engineers Serving the Marine Community
1201 Western Avenue, Suite 200
Seattle, Washington 98101-2921
TEL 206.624.7930
FAX 206.682.9117
WEB www.glosten.com

STATE OF MAINE
DEPARTMENT OF TRANSPORTATION

PROJECT NUMBER 009215.00

PIN
009215.00

STATE OF MAINE
RICHARD J. THOMAS
BRIDGE
10647
REGISTERED
PROFESSIONAL ENGINEER

		BY	DATE
PROJ. MANAGER	PAUL POTTLE		
DESIGN–DETAILED	RBL		02/25/04
CHECKED–REVIEWED	JTB		03/15/04
DESIGN2–DETAILED2	RBL		08/12/04
DESIGN3–DETAILED3			
REVISIONS 1			
REVISIONS 2			
REVISIONS 3			
REVISIONS 4			
FIELD CHANGES			

SIGNATURE

P.E. NUMBER

10-6-04
DATE

CITY OF PORTLAND
OCEAN GATEWAY PHASE 1

PIER 2 BERTH 2
DETAILS

W319-M
ALT.

9/30/04
Filename: 20343802-M-W319-ALT-100

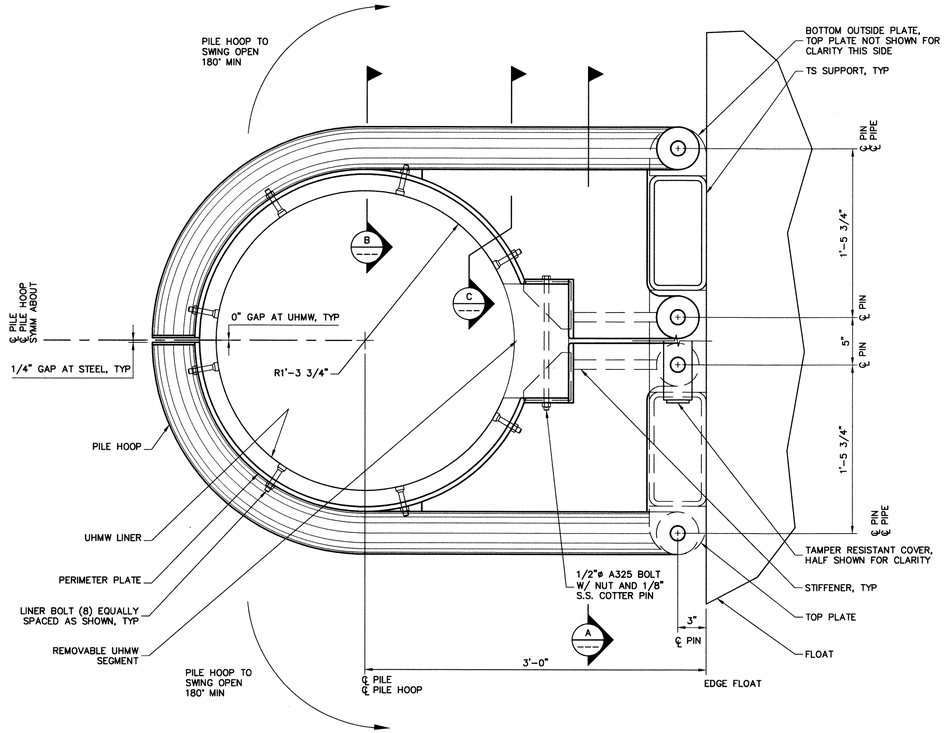

PLAN

SCALE: 1 1/2" = 1'-0"

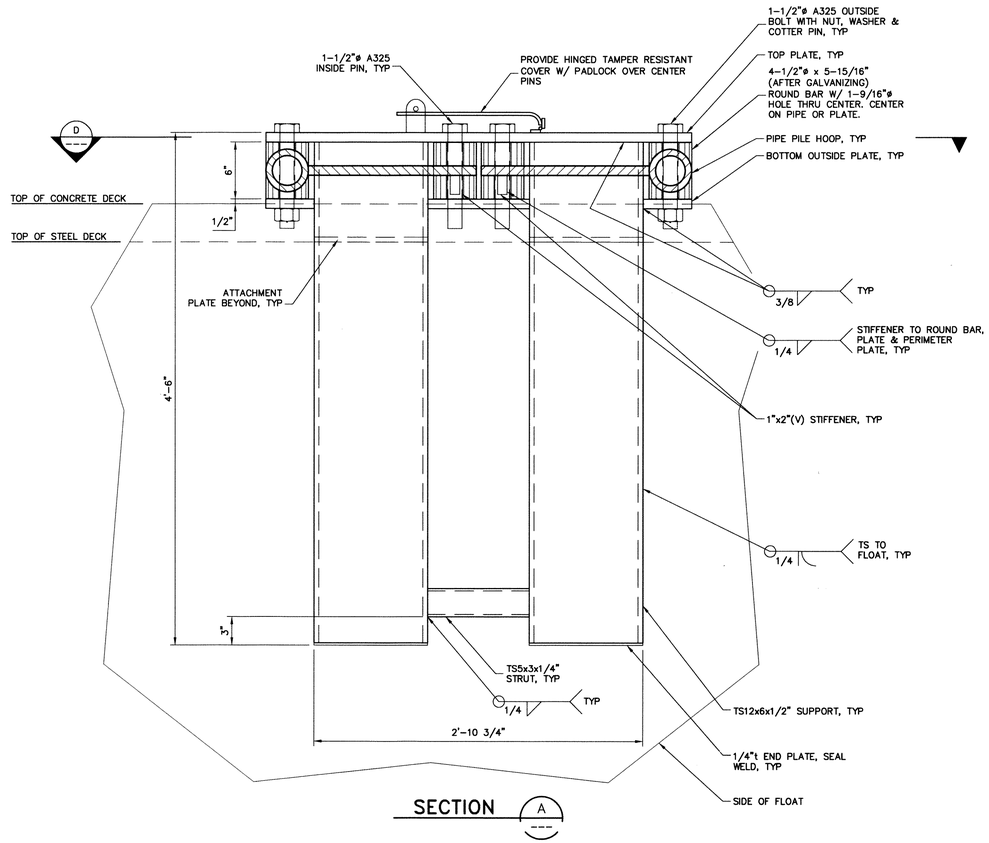

SECTION A

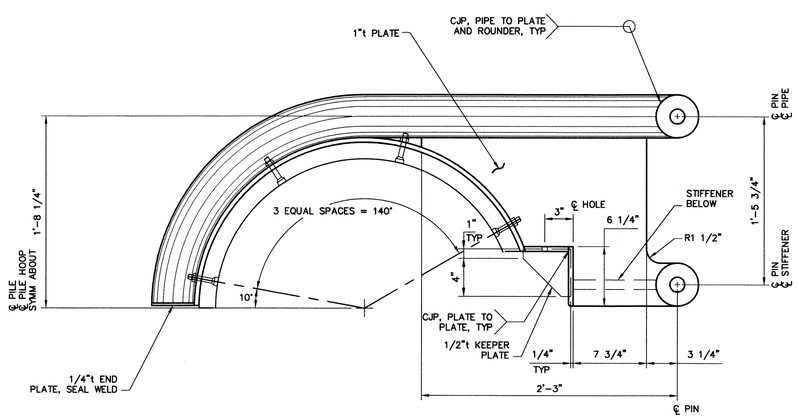

HALF PILE HOOP PLAN

SCALE: 1 1/2" = 1'-0"

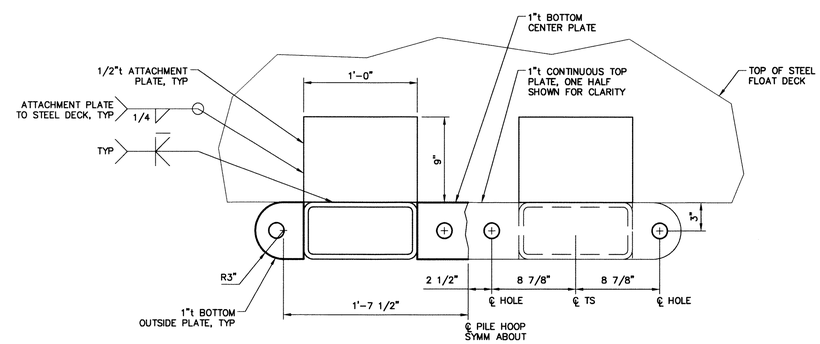

VIEW D-D

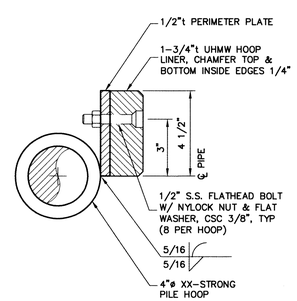

SECTION B

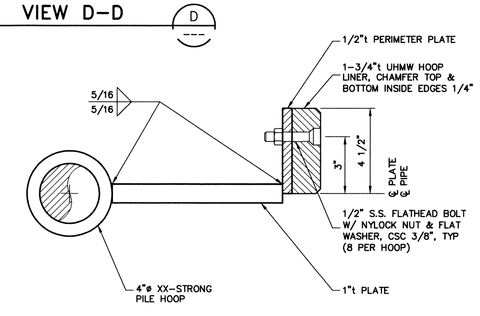

SECTION C

NOTE:
ALL STEEL SHALL BE GALVANIZED UNLESS OTHERWISE NOTE.

ALTERNATE No. 4

811 First Avenue, Suite 570
Seattle, Washington 98104
Phone: 206-624-1387
Fax: 206-624-1388
mail@pnengineers.com
PND ENGINEERS, INC.

STATE OF MAINE
DEPARTMENT OF TRANSPORTATION

PROJECT NUMBER 017812.00

PIN 017812.00

STATE OF MAINE — DAVID M. PIERCE 9437 — REGISTERED PROFESSIONAL ENGINEER

		BY	DATE
PROJ. MANAGER	PAUL POTTLE		
DESIGN-DETAILED	TMB	DH	09/01/04
CHECKED-REVIEWED	RJ	DP	09/01/04
DESIGN2-DETAILED2			
DESIGN3-DETAILED3			
REVISIONS 1	P282-REBID 2010		06/08/10
REVISIONS 2			
REVISIONS 3			
REVISIONS 4			
FIELD CHANGES			

SIGNATURE 9437
P.E. NUMBER
6/8/10
DATE

CITY OF PORTLAND
OCEAN GATEWAY PIER 2 BERTH 2

PIER 2 BERTH 2
PILE HOOPS

W320-M
ALT.

9/30/04
Filename: Drawings\2010\104040.01 - Ocean Gateway Pier 2 Berth 2\100% Review\20343802-M-W320-ALT-100.dwg

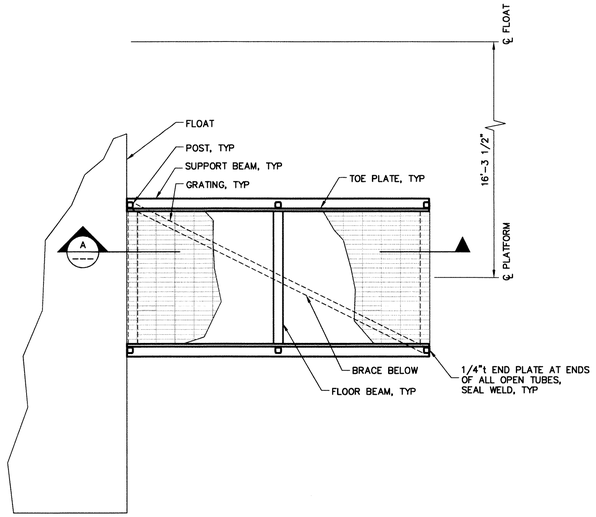

FLOOR PLAN

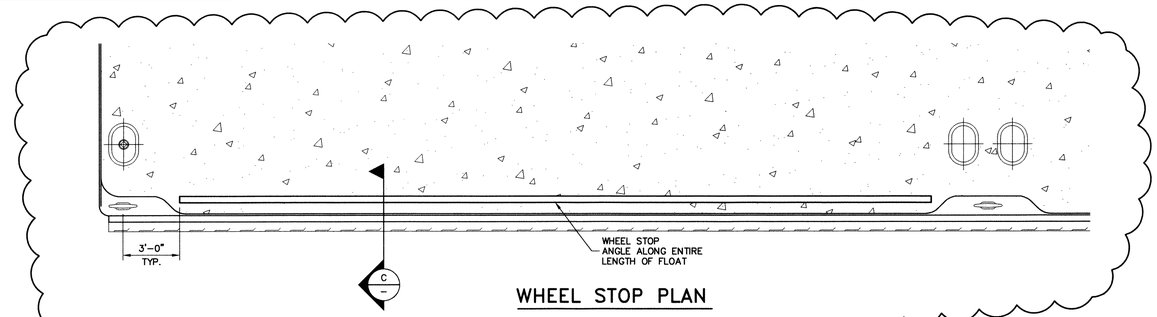

WHEEL STOP PLAN

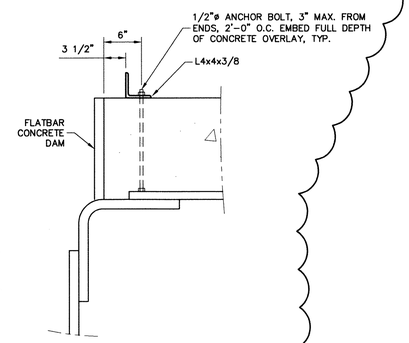

TYPICAL SECTION C

NOTE:
WELD ALL JOINTS WITH 1/4" FILLET WELD OR EQUIVALENT BEVEL WELD ALL AROUND UNLESS OTHERWISE NOTED.

ALL STEEL SHALL BE GALVANIZED UNLESS OTHERWISE NOTED.

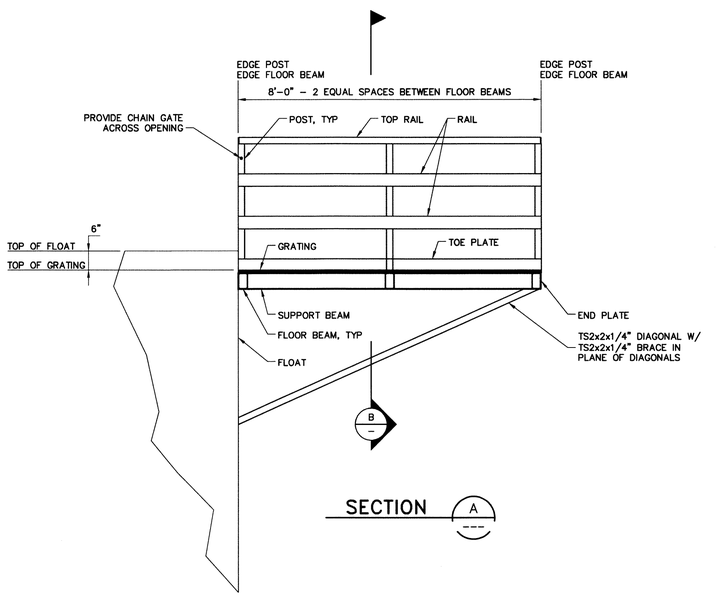

SECTION A

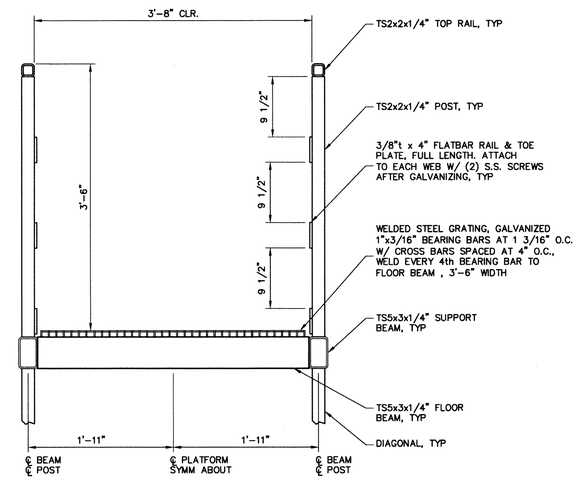

TYPICAL SECTION B

ALTERNATE No. 4

811 First Avenue, Suite 570
Seattle, Washington 98104
Phone: 206-624-1387
Fax: 206-624-1388
mail@pndengineers.com
PND ENGINEERS, INC.

STATE OF MAINE
DEPARTMENT OF TRANSPORTATION

PROJECT NUMBER 017812.00

PIN 017812.00

STATE OF MAINE DAVID M. PIERCE 5487 REGISTERED PROFESSIONAL ENGINEER

SIGNATURE	943
P.E. NUMBER	5487
DATE	6/8/10

PROJ. MANAGER	PAUL POTTLE		
DESIGN-DETAILED	TWB	DH	09/01/04
CHECKED-REVIEWED	RJ	DP	09/01/04
DESIGN2-DETAILED2			
DESIGN3-DETAILED3	P282-REBID 2010		06/08/10
REVISIONS 1			
REVISIONS 2			
REVISIONS 3			
REVISIONS 4			
FIELD CHANGES			

CITY OF PORTLAND
OCEAN GATEWAY PIER 2 BERTH 2

PIER 2 BERTH 2
LADDER ACCESS PLATFORM

W321-M
ALT.

9/30/04
Filename: Drawings\2010\104040.01 - Ocean Gateway Pier 2 Berth 2\100% Review\20343802-M-W321-ALT-100.dwg

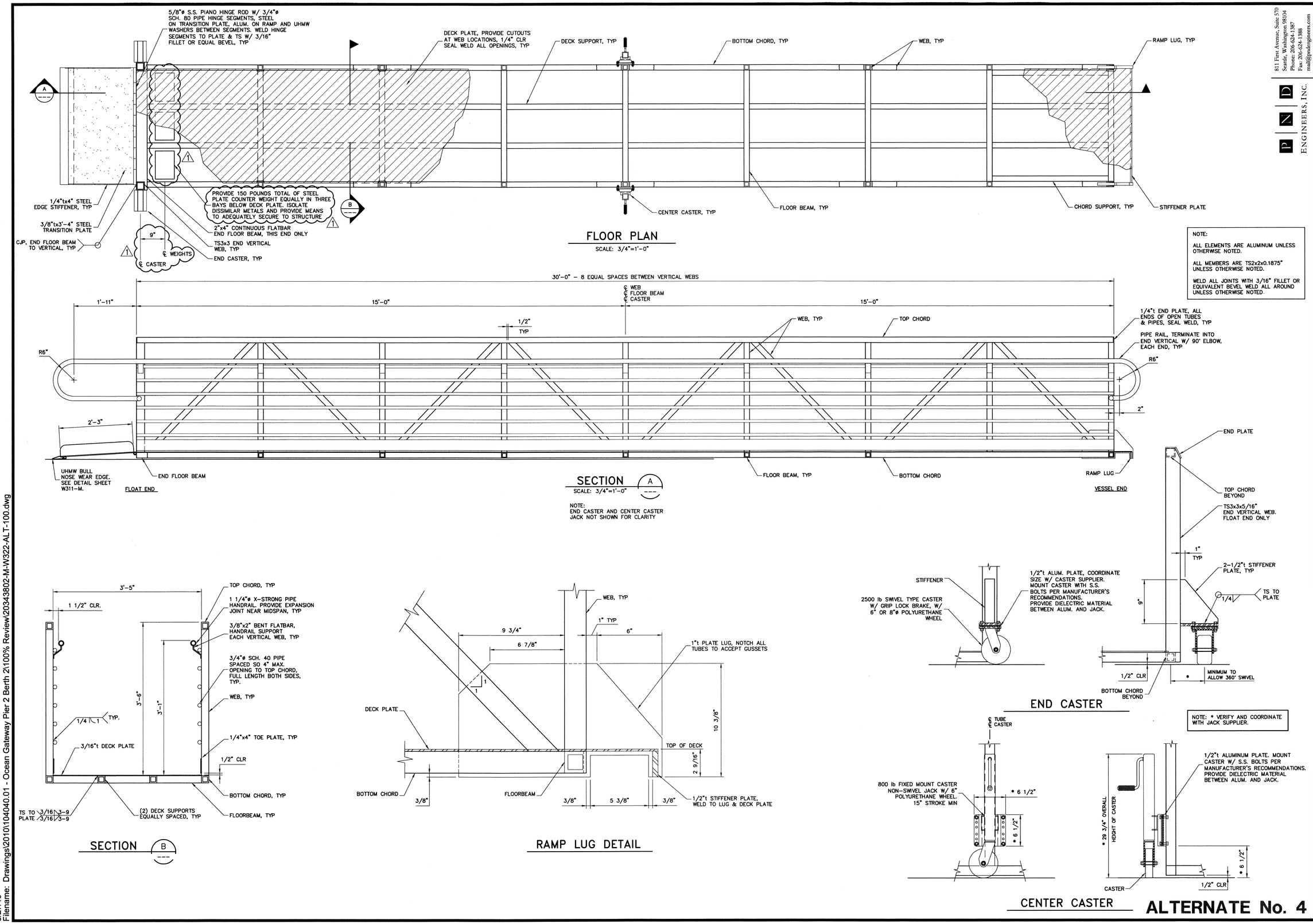

NOTE:

ALL ELEMENTS ARE ALUMINUM UNLESS OTHERWISE NOTED.

ALL MEMBERS ARE TS2x2x0.1875" UNLESS OTHERWISE NOTED.

WELD ALL JOINTS WITH 3/16" FILLET OR EQUIVALENT BEVEL WELD ALL AROUND UNLESS OTHERWISE NOTED.

NOTE: * VERIFY AND COORDINATE WITH JACK SUPPLIER.

ALTERNATE No. 4

811 First Avenue, Suite 570
Seattle, Washington 98104
Phone: 206-624-1387
Fax: 206-624-1388
mail@pndengineers.com
PND ENGINEERS, INC.

STATE OF MAINE
DEPARTMENT OF TRANSPORTATION

PROJECT NUMBER 017812.00

PIN 017812.00

STATE OF MAINE · DAVID M. PEDE 9437 · REGISTERED PROFESSIONAL ENGINEER

SIGNATURE	9437	
P.E. NUMBER	6/8/10	
DATE		

PROJ. MANAGER	PAUL POTTLE		
DESIGN-DETAILED	TWB	DH	09/01/04
CHECKED-REVIEWED	RJ	DP	09/01/04
DESIGN2-DETAILED2			
DESIGN3-DETAILED3			
REVISIONS 1	P282-REBID 2010		06/08/10
REVISIONS 2			
REVISIONS 3			
REVISIONS 4			
FIELD CHANGES			

CITY OF PORTLAND
OCEAN GATEWAY PIER 2 BERTH 2

PIER 2 - BERTH 2
EXTENSION RAMP

W322-M
ALT.

5/27/10
Filename: Drawings\2010\104040.01 - Ocean Gateway Pier 2 Berth 2\100% Review\20343802-M-W322-ALT-100.dwg

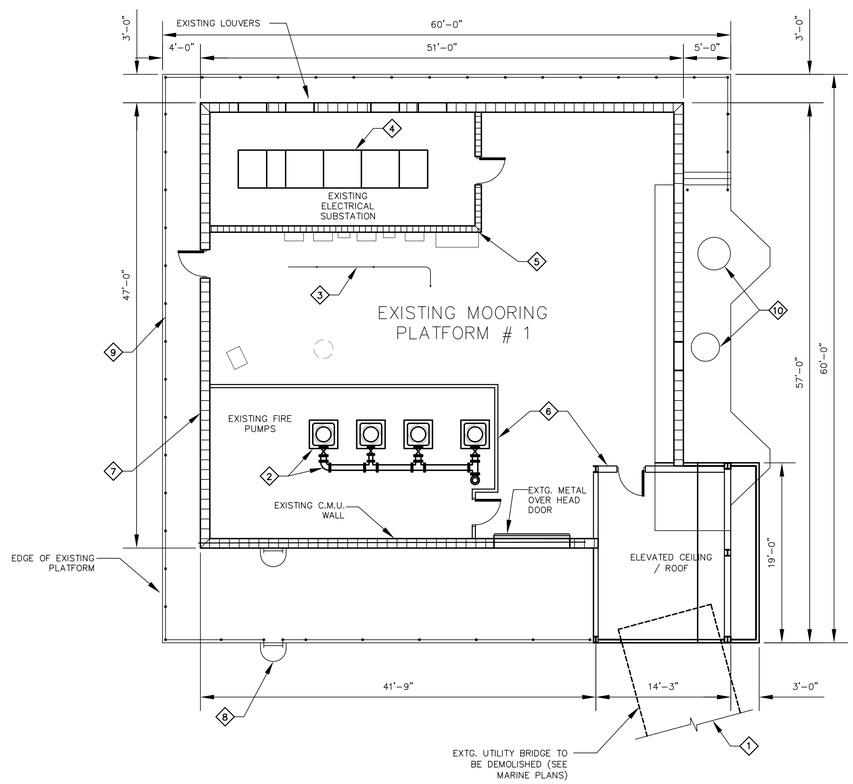

EXISTING MOORING PLATFORM BUILDING DEMOLITION PLAN

N

SCALE: 1/8"=1'-0"

TASK NO.	DEMOLITION SCOPE OF WORK
1	DEMOLISH EXISTING UTILITY BRIDGE
2	DEMOLISH EXISTING PUMPS, VALVES, PIPING, AND CONCRETE EQUIPMENT PADS (QUANTITY, LOCATION, AND SIZE APPROXIMATE AS SHOWN, CONTRACTOR SHALL OBSERVE AND DOCUMENT IN ADVANCE OF BID)
3	DEMOLISH GUARDRAILS AND POSTS
4	DEMOLISH FLOOR MOUNTED ELECTRICAL SUBSTATION EQUIPMENT (QUANTITY, LOCATION, AND SIZE APPROXIMATE AS SHOWN, CONTRACTOR SHALL OBSERVE AND DOCUMENT IN ADVANCE OF BID)
5	DEMOLISH INTERIOR CMU WALL AND WALL MOUNTED ELECTRICAL EQUIPMENT
6	DEMOLISH WOOD FRAMED WALL
7	DEMOLISH EXISTING BUILDING STRUCTURE, WALLS, AND ROOF
8	DEMOLISH WATER ACCESS LADDER AND MOUNTING BRACKETS
9	DEMOLISH ALL EXTERIOR GUARDRAILS AND POSTS
10	EXISTING BOLLARDS ON ELEVATED DECK TO REMAIN (QUANTITY, LOCATION, AND SIZE APPROXIMATE AS SHOWN)

NOTE:

NUMEROUS PIPES, WIRES, CABLES, EQUIPMENT, LIGHTING FIXTURES, AND OTHER ITEMS EXIST WITHIN, AFFIXED TO, OR EXTERIOR TO THE MOORING PLATFORM BUILDING, MANY OF WHICH ARE NOT NOTED OR DEPICTED ON DEMOLITION PLAN. CONTRACTOR SHALL FAMILIARIZE THEMSELVES WITH ITEMS WITHIN THE BUILDING AND ON THE MOORING PLATFORM IN ADVANCE OF BID, AND SHALL BE RESPONSIBLE FOR DEMOLITION AND PROPER DISPOSAL OF THESE ITEMS. CONTRACTOR SHALL FAMILIARIZE THEMSELVES WITH THE CONDITION OF THE BUILDING AND THE ITEMS CONTAINED WITHIN THE BUILDING IN ADVANCE OF BID.

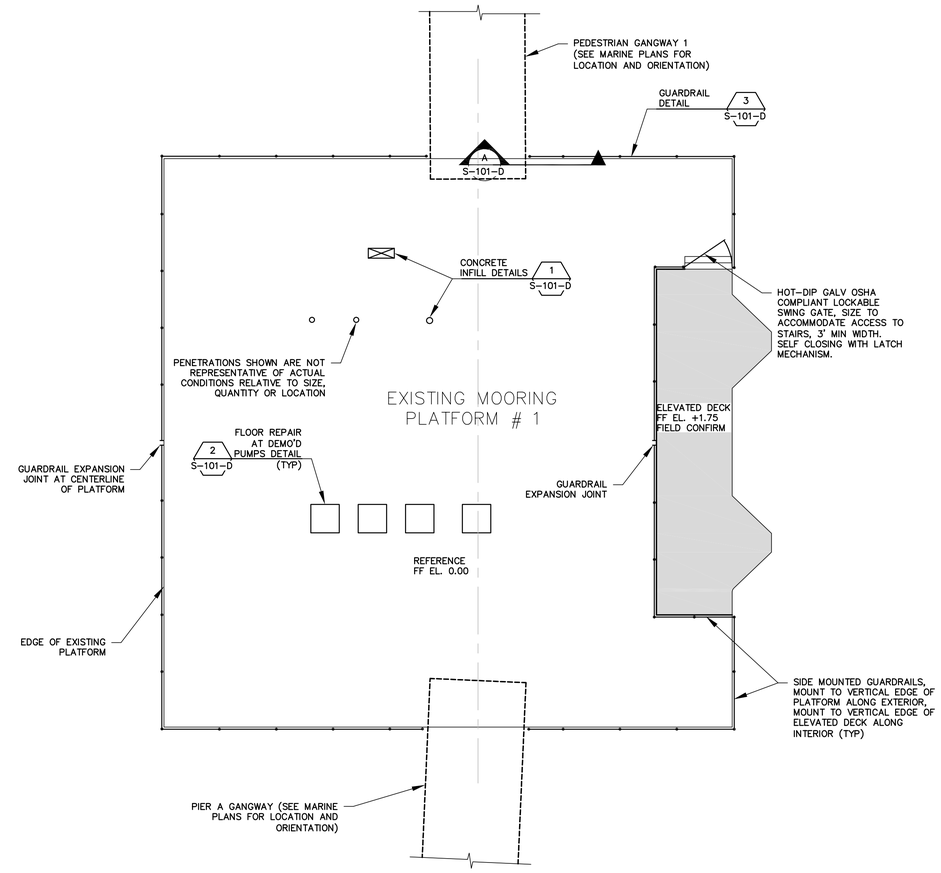

MOORING PLATFORM BUILDING RAILING PLAN

N

SCALE: 1/8"=1'-0"

MOORING PLATFORM NOTES:

A. ALL PENETRATIONS WITHIN THE MOORING PLATFORM DECK SHALL BE INFILLED PER DETAILS ON THIS DRAWING.

B. ALL CONCRETE WALKING SURFACES SHALL BE SOUNDED TO LOCATE ANY VOIDS AND DELAMINATED CONCRETE. SAWCUT DAMAGED AREAS, MINIMUM 2" DEEP AND PATCH FLUSH W/ SIKATOP 123 PLUS.

C. POWER WASH ALL CONCRETE SURFACES AFTER REPAIRS ARE COMPLETED AND FULLY CURED.

D. STAIN ALL CONCRETE SURFACES WITH (2) COATS OF VEXCON CERTI-VEX GUARD CHEMICALLY ACTIVE CONCRETE STAIN (CACS) AFTER ALL SURFACES HAVE BEEN CLEANED AND REPAIRED. COLOR SHALL BE CONCRETE GRAY.

E. FINAL WALKING SURFACE OF MOORING PLATFORM SHALL BE FREE OF ANY ANCHOR BOLTS/NAILS, CMU MORTAR, ELECTRICAL CONDUIT, PIPING, OR ANY OTHER VERTICAL OBTRUSIONS. FINAL WALKING SURFACE SHALL BE PATCHED AND REPAIRED AS REQUIRED TO INFILL ALL VOIDS TO PROVIDE A SOLID, FLUSH WALKING SURFACE FREE OF TRIPPING HAZARDS OR ANY UNSAFE CONDITIONS FOR PEDESTRIAN TRAFFIC. FINAL REPAIRED SURFACE SHALL BE APPROVED BY THE ENGINEER AND OWNER PRIOR TO APPLICATION OF THE CONCRETE STAIN.

F. CONTRACTOR IS SOLELY RESPONSIBLE TO COORDINATE INTERFACES OF NEW GUARDRAILS WITH GANGWAY PLATFORM RAILINGS.

G. ALL GUARDRAILS SHALL BE HOT-DIP GALV. AND FIELD PAINTED PER THE FOLLOWING SCHEDULE;

GALVANIZING REPAIR AT FIELD WELD	1. TNEMEC "SERIES 90-97 TNEME-ZINC" 2. S-W "ZINC-CLAD 2 PLUS" 3. DEVOE "CATHACOAT 302H"
FIELD APPLIED PRIME COAT	1. TNEMEC "SERIES 27 TYPOXY" DFT 2-3 MILS 2. S-W "MACROPOXY 646" DFT 5-10 MILS 3. DEVOE "DEVRAN 203" DFT 3-4 MILS
FIELD APPLIED TWO FINISH COATS	1. TNEMEC "SERIES 175 ENDURA-SHIELD" DFT 2-5 MILS/CT 2. S-W "HIGH-SOLIDS POLYURETHANE 100" DFT 3-4 MILS/CT 3. DEVOE "DEVTHANE 379H" DFT 3-5 MILS/CT

12' 8' 4' 0 8' 16'

BAR SCALE
1/8" = 1'-0"
CHECK GRAPHIC SCALE BEFORE USING

41 Hutchins Drive | Portland, ME 04102
800.426.4262 | www.woodardcurran.com
COMMITMENT & INTEGRITY DRIVE RESULTS
WOODARD & CURRAN

STATE OF MAINE
DEPARTMENT OF TRANSPORTATION

PROJECT NUMBER 017812.00

PIN 017812.00

STATE OF MAINE SCOTT M HAWK No. 11298 LICENSED PROFESSIONAL ENGINEER

PROJ. MANAGER	PAUL POTTLE	BY	DATE
DESIGN-DETAILED	SMH	PCS	05/10
CHECKED-REVIEWED	DAS	SMH	06/08/10
DESIGN2-DETAILED2			
DESIGN3-DETAILED3			
REVISIONS 1			
REVISIONS 2			
REVISIONS 3			
REVISIONS 4			
FIELD CHANGES			

SIGNATURE

11298
P.E. NUMBER

JUNE 8, 2010
DATE

CITY OF PORTLAND
OCEAN GATEWAY PIER 2 BERTH 2

EXISTING MOORING PLATFORM BLDG
DEMO AND RAILING PLAN

S-100-D

Filename: \\Portland\Projects\1223485 Ocean Gateway P2B2\01 Design\Deliverables\2010.06.08 Bid Documents to File\ACAD\20343802-S100_101-D.dwg, Jun 08, 2010 - 4:05pm

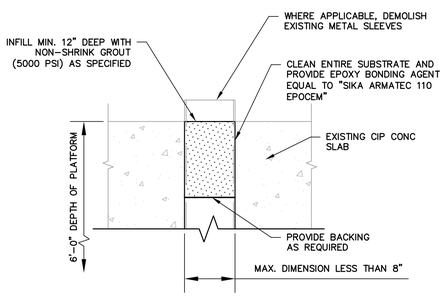

OPENING < 8"

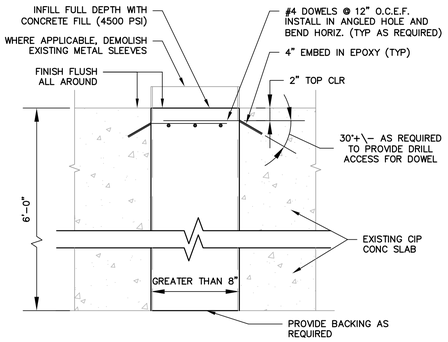

OPENING > 8"

NOTES:

1. CONCRETE INFILL DETAILS SHALL APPLY TO ALL EXISTING OPENINGS IN MOORING PLATFORM DECK. OPENING SIZE SHALL DETERMINE WHICH INFILL TYPE APPLIES.
2. CONTRACTOR SHALL INFILL ALL OPENINGS IN DECK, WHETHER VISIBLE OR NOT VISIBLE DURING THE PRE-BID INSPECTION AND WHETHER DEPICTED OR NOT DEPICTED ON PLANS. UNDOCUMENTED OPENINGS EXIST IN MOORING PLATFORM DECK AND SHALL BE ANTICIPATED BY CONTRACTOR AS PART OF THEIR BID.

1 / S-100-D CONCRETE INFILL DETAILS

SCALE: 1" = 1'-0"

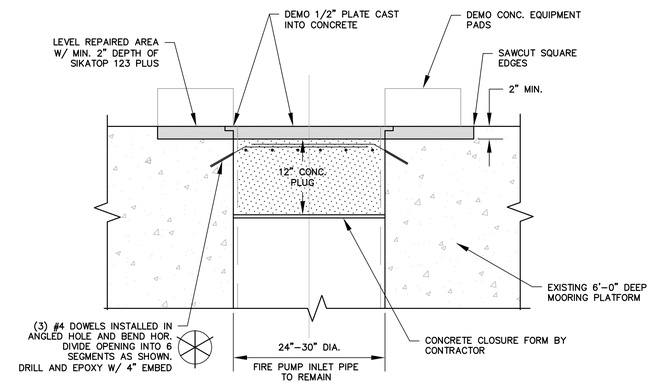

2 / S-100-D FLOOR REPAIR @ DEMO'D PUMPS

SCALE: 1" = 1'-0"

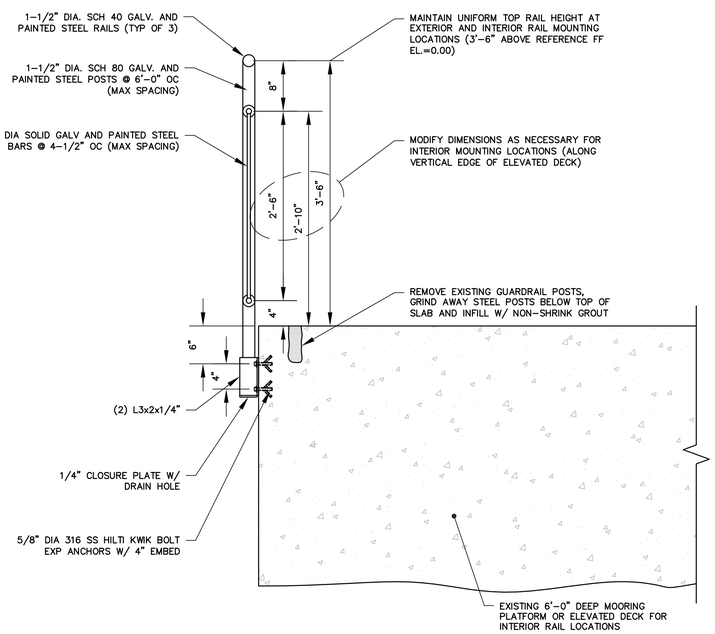

3 / S-100-D GUARDRAIL DETAIL

SCALE: 1" = 1'-0"

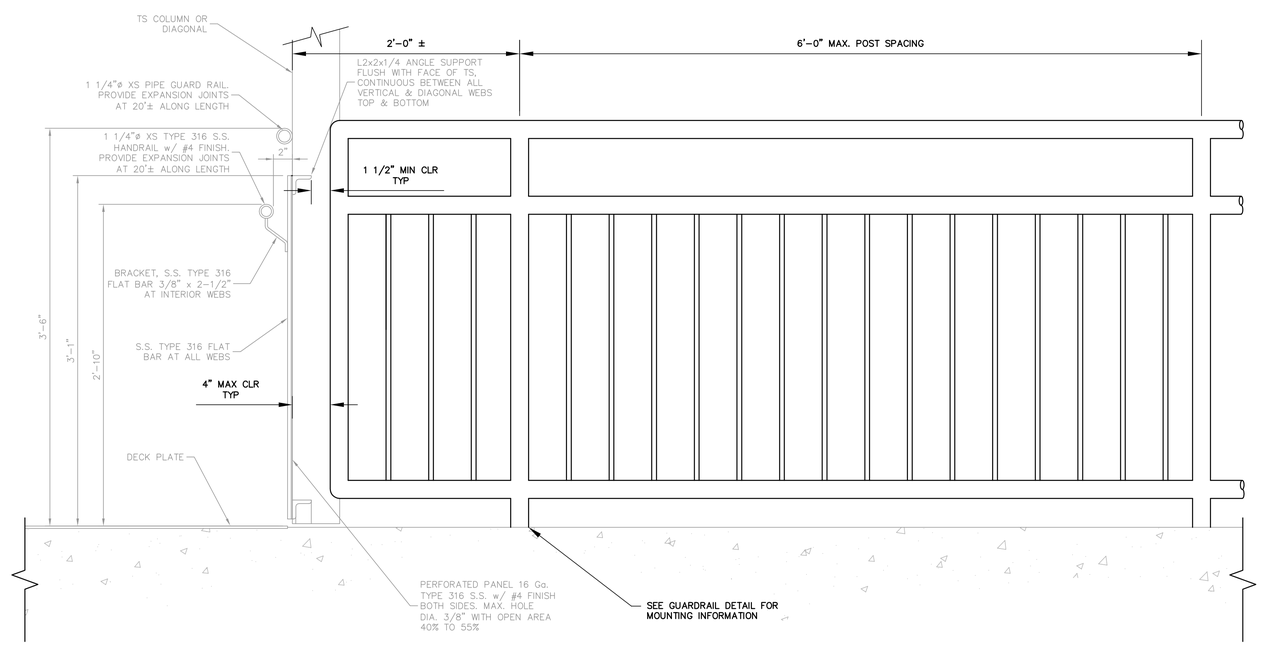

SECTION A / S-100-D

SCALE: 1 1/2"=1'-0"

1 1/2' 1' 1/2' 0 1' 3'

BAR SCALE
1 1/2" = 1'-0"
CHECK GRAPHIC SCALE BEFORE USING

2' 1' 0 1' 2'

BAR SCALE
1" = 1'-0"
CHECK GRAPHIC SCALE BEFORE USING

41 Hutchins Drive | Portland, ME 04102
800.426.4262 | www.woodardcurran.com
COMMITMENT & INTEGRITY DRIVE RESULTS
WOODARD & CURRAN

STATE OF MAINE
DEPARTMENT OF TRANSPORTATION

PROJECT NUMBER 017812.00

PIN 017812.00

STATE OF MAINE SCOTT M HAWK No. 11298 LICENSED PROFESSIONAL ENGINEER

Scott M Hawk	SIGNATURE	06/08/10
11298	P.E. NUMBER	
JUNE 8, 2010	DATE	

PROJ. MANAGER	PAUL POTTLE	
DESIGN-DETAILED	SMH	PCS
CHECKED-REVIEWED	DAS	SMH
DESIGN2-DETAILED2		
DESIGN3-DETAILED3		
REVISIONS 1		
REVISIONS 2		
REVISIONS 3		
REVISIONS 4		
FIELD CHANGES		

DATE: 05/10

CITY OF PORTLAND
OCEAN GATEWAY PIER 2 BERTH 2

EXISTING MOORING PLATFORM BLDG
SECTION AND DETAILS

S-101-D

Filename: \\Portland\Projects\11223485 Ocean Gateway P2B2\01 Design\Deliverables\2010.06.08 Bid Documents to File\ACAD\20343802-S100_101-D.dwg, Jun 08, 2010 - 4:07pm

GENERAL NOTES:

1. INSTALL EXPANSION JOINTS AT NO MORE THAN 100' INTERVALS IN ALL CONDUIT RUNS.
2. PROVIDE PVC COATED RGS CONDUIT, FITTINGS, AND SUPPORT CLAMPS FOR ALL CONDUIT EXPOSED ON THE PIER AND PEDESTRIAN GANGWAYS.
3. SEE PIER 2 BERTH 2 PLANS W310-M ALT & W311-M ALT FOR CONDUIT LOCATIONS WITHIN GANGWAYS.

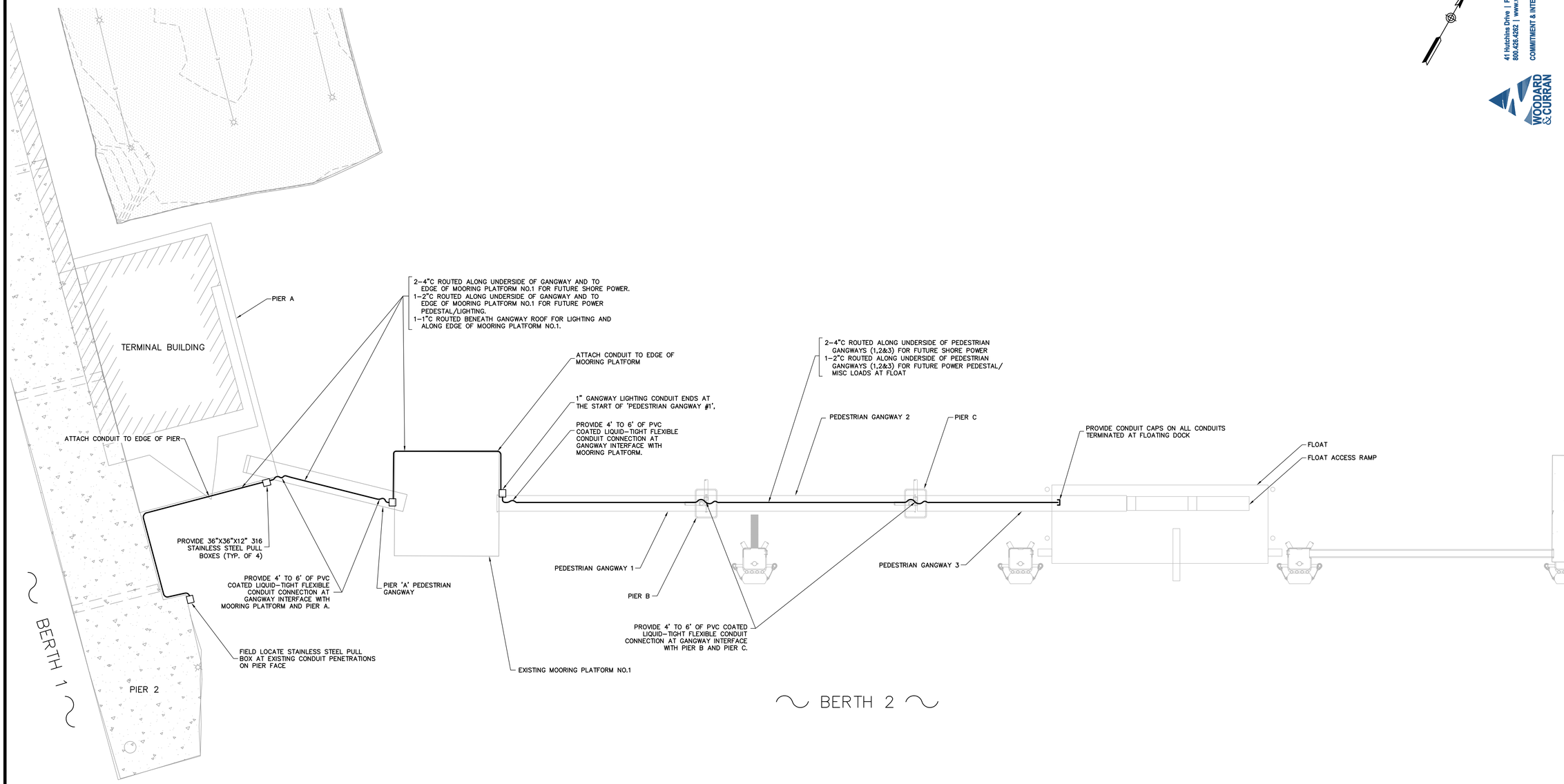

30' 0 30' 60'

BAR SCALE
1" = 30'
CHECK GRAPHIC SCALE BEFORE USING

41 Hutchins Drive | Portland, ME 04102
800.426.4262 | www.woodardcurran.com
COMMITMENT & INTEGRITY DRIVE RESULTS
WOODARD & CURRAN

STATE OF MAINE
DEPARTMENT OF TRANSPORTATION

PROJECT NUMBER 017812.00

PIN
017812.00

STATE OF MAINE
TEDD M. GIFFORD
NO. 10271
LICENSED
PROFESSIONAL ENGINEER

SIGNATURE	
P.E. NUMBER	10271
DATE	06/08/10

PROJ. MANAGER PAUL POTTLE	BY	DATE
DESIGN-DETAILED	KRM	SEH 05/2010
CHECKED-REVIEWED	DAS	TMG 06/08/10
DESIGN2-DETAILED2		
DESIGN3-DETAILED3		
REVISIONS 1		
REVISIONS 2		
REVISIONS 3		
REVISIONS 4		
FIELD CHANGES		

CITY OF PORTLAND
OCEAN GATEWAY PIER 2 BERTH 2

ELECTRICAL SITE PLAN

E-100

9/30/04
Filename: 20343802-M-W100-ALT-100

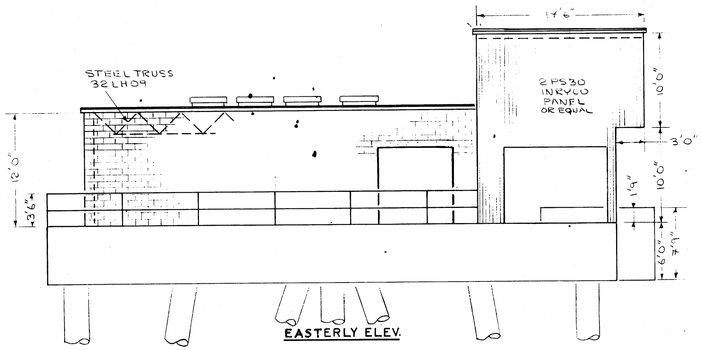

EASTERLY ELEV.

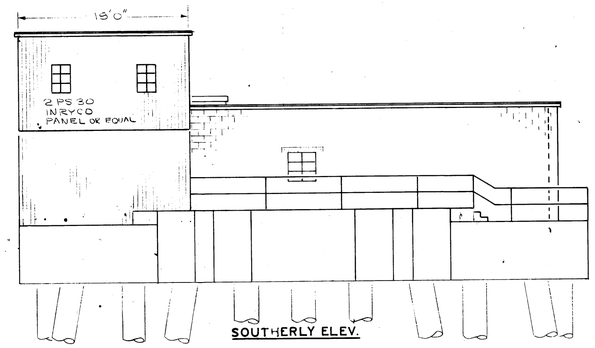

SOUTHERLY ELEV.

SCALE: 1·8" = 1'0"

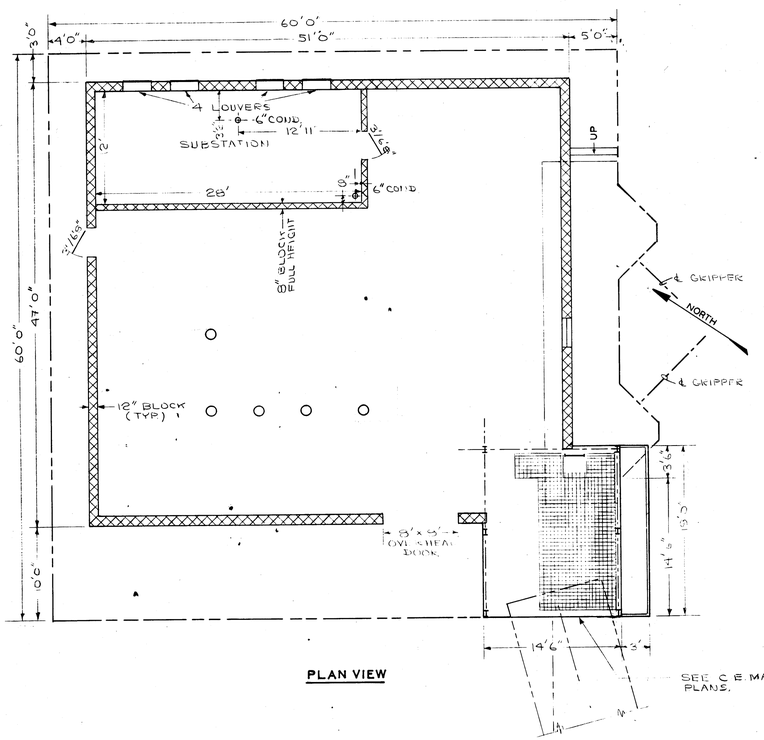

PLAN VIEW

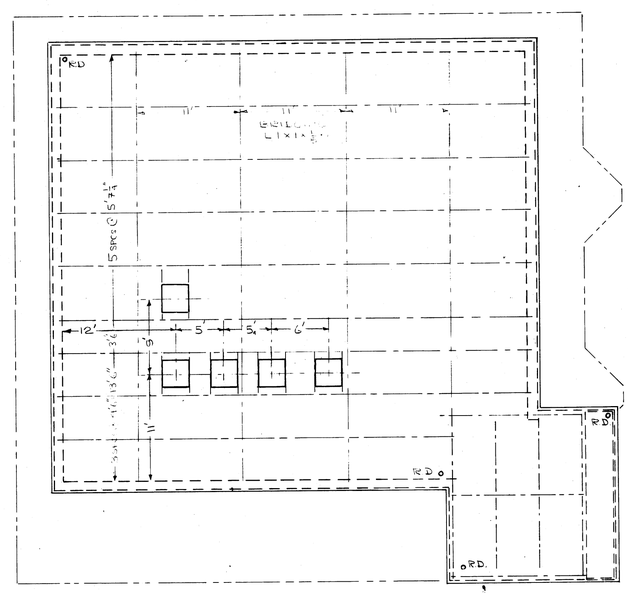

ROOF PLAN

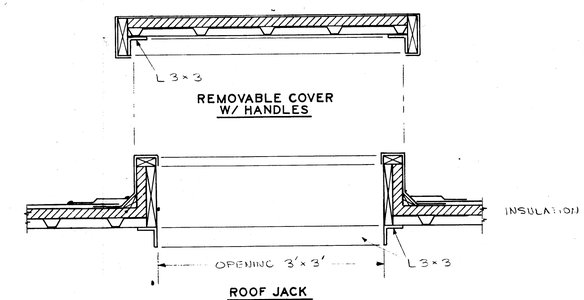

ROOF JACK

SCALE: 1" = 1'0"

Nº	REVISION	BY	DATE
4	ADDED CONDUITS IN SUBSTATION	D.C.	9-27-82
3	LOWER SECT. OF BLDG. 18'x17'6" METAL		
	INSTEAD OF CONC. BLOCK	D.C.	4-29-82
2	ADDED ROOF JACKS	D.C.	4-24-82
1	BUILDING CHANGES	D.C.	4-8-82

BATH IRON WORKS CORP.
OFFICE OF PLANT ENGINEER
PORTLAND, MAINE

DOLPHIN BUILDING
PLAN & ELEVS.

DR'N. D.C. 3-20-82
C'K'D.
APPR'D.

SCALE AS NOTED
DWG.NO. 10051

BRUNING 44-141 30558

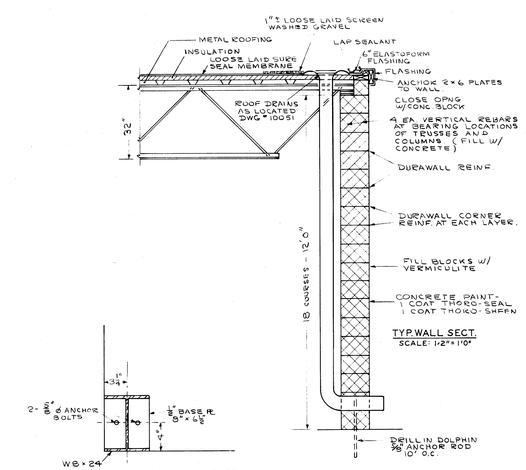

TYP. WALL SECT.
SCALE: 1-2"=1'0"

TYP. COL. BASE ARRGT.
SCALE: 1'-0"=1"

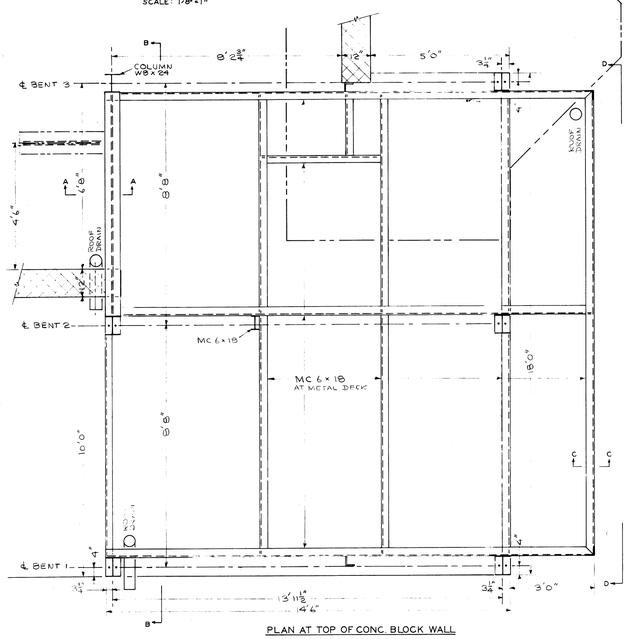

PLAN AT TOP OF CONC. BLOCK WALL
SCALE: 1-2"=1'0"

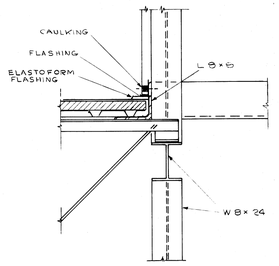

SECT. A-A
SCALE: 1"=1'0"

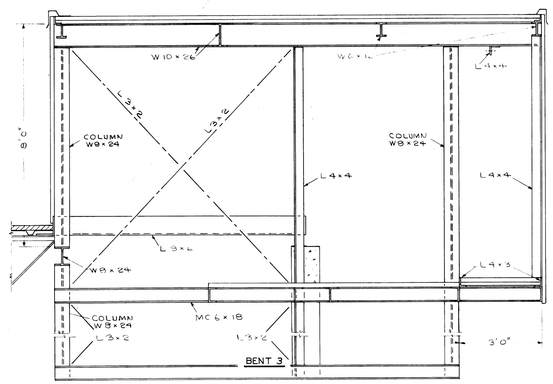

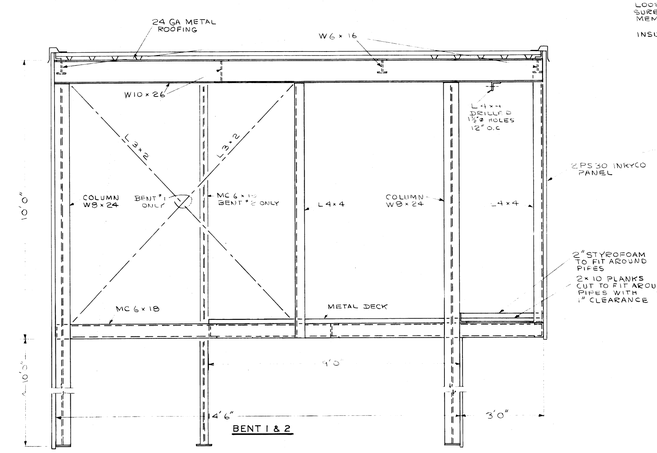

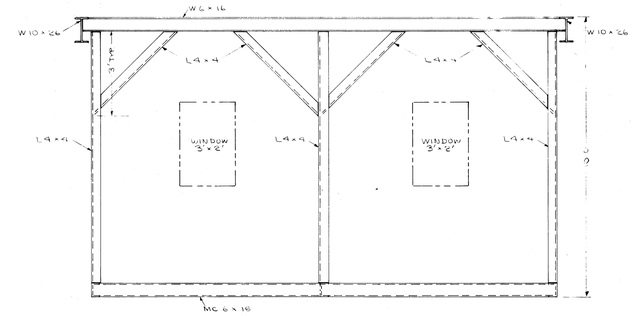

SECT. ELEV. D-D

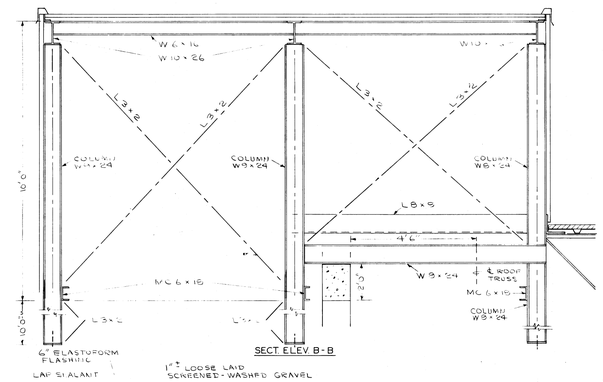

SECT. ELEV. B-B

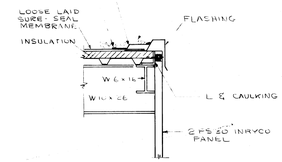

TYP. SECT. AT ROOF

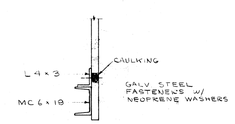

SECT. C-C
SCALE: 1"=1'0"

BID COPY ISSUED APR 30 1982 B. I. W. PLANT ENGRS.

Nº	REVISION	BY	DATE
1	LOWER SECT. OF BLDG. 18'×17'6" METAL		

BATH IRON WORKS CORP.
OFFICE OF PLANT ENGINEER
PORTLAND, MAINE

DOLPHIN BUILDING
RAISED ROOF AREA
PLAN & SECT. ELEVS.

DR'N. *D.C. 4-9-82*
C'K'D.
APPR'D.

SCALE *AS NOTED*
DWG.NO. *10080*

DRAWING 44 14 50317

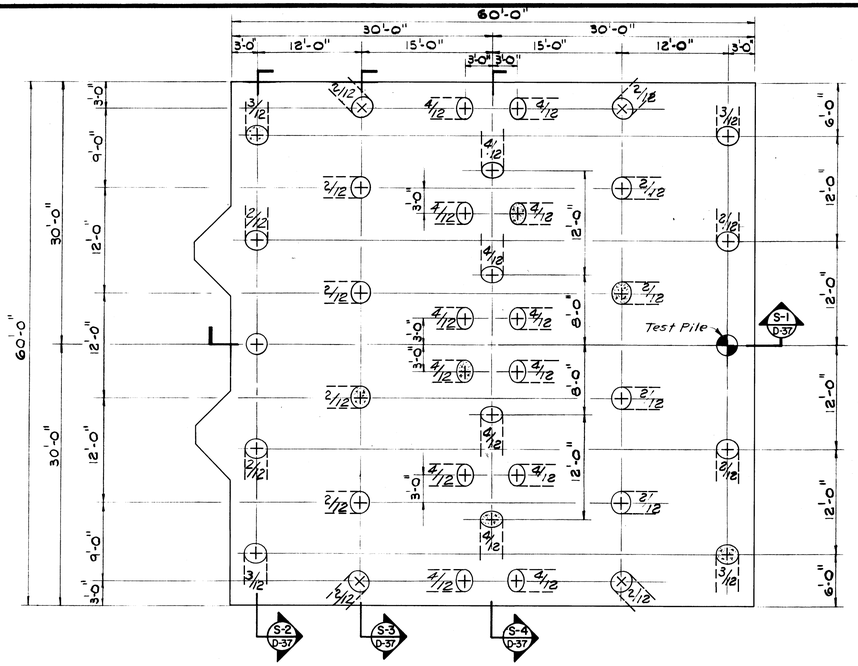

PILE PLAN @ ELEV. 12.0

1/8" = 1'-0"

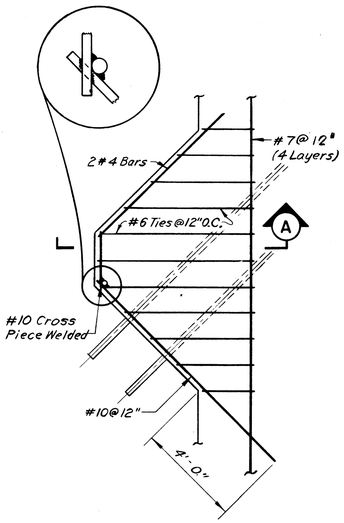

DETAIL 'A'

3/8" = 1'-0"

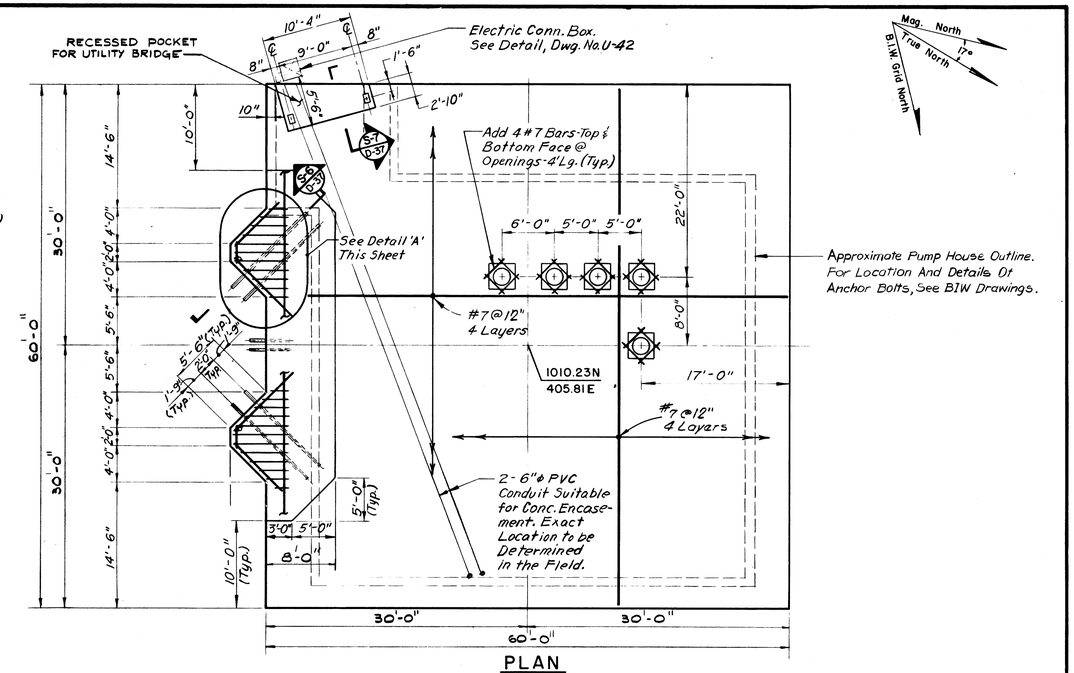

PLAN

1/8" = 1'-0"

NOTE:
PILE CUT OFF
ELEV. = +14.50 TYP.

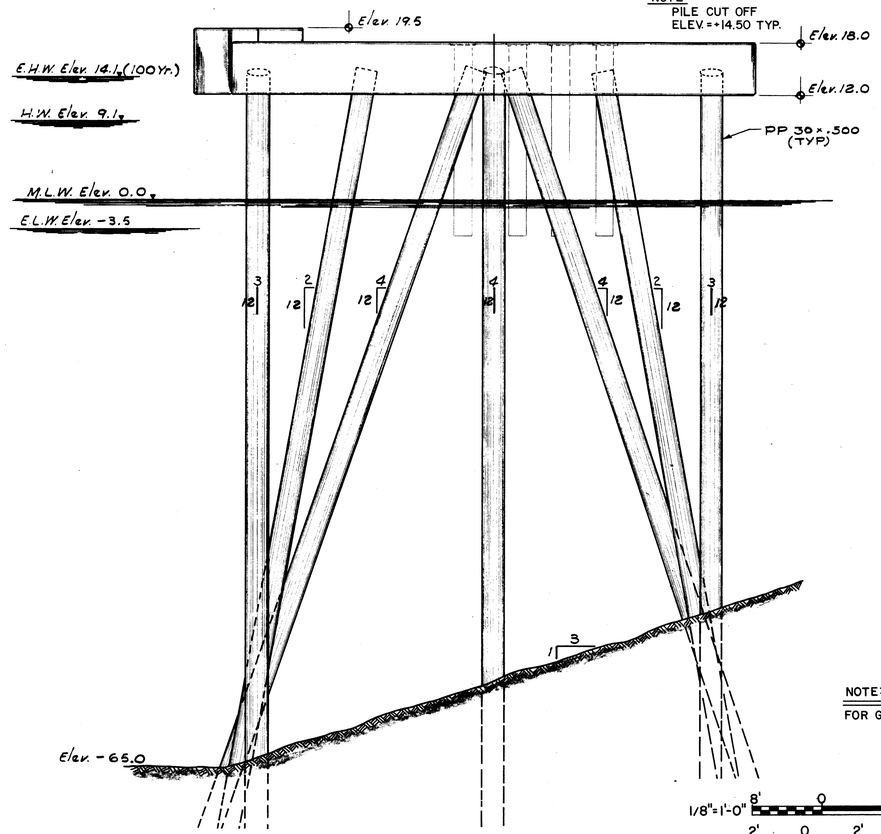

EAST ELEVATION

1/8" = 1'-0"

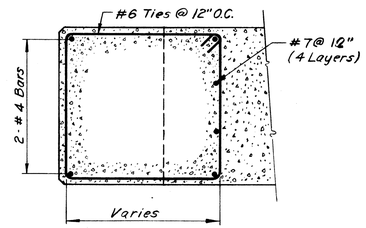

SECTION (A)

3/8" = 1'-0"

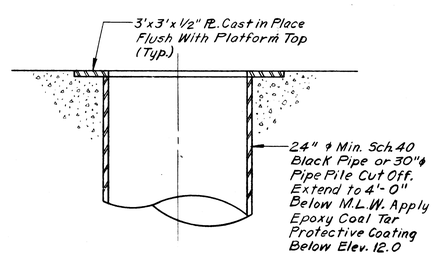

TYPICAL SECTION THRU FIRE PUMP ICE SHIELD

1" = 1'-0"

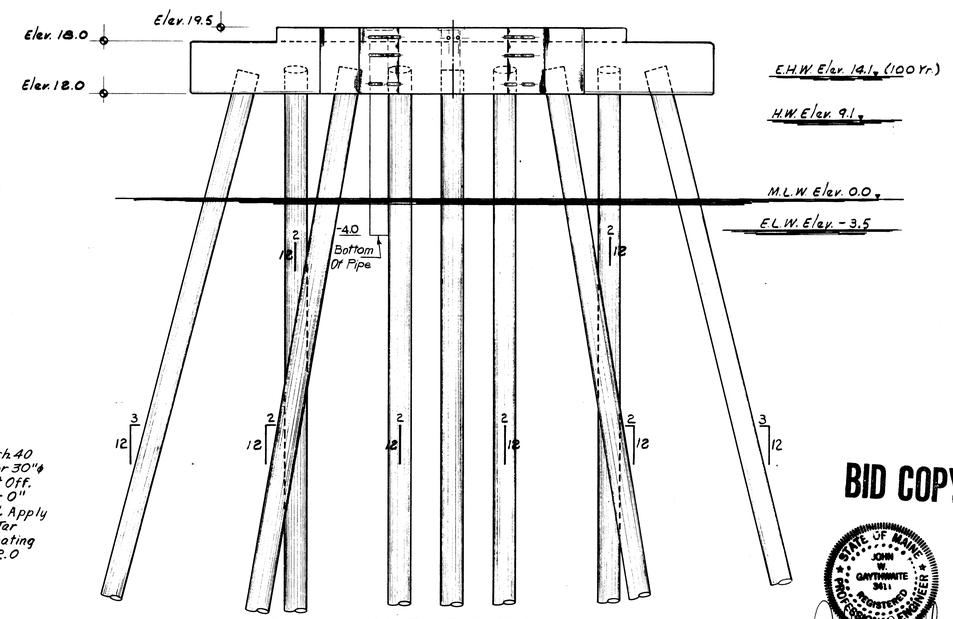

SOUTH ELEVATION

1/8" = 1'-0"

BID COPY

STATE OF MAINE JOHN W. GAYTHWAITE 3611 REGISTERED PROFESSIONAL ENGINEER

NOTE:
FOR GENERAL NOTES, SEE DWG. NO. D-37

NOTE WELL:
EXACT LOCATION OF MOORING PLATFORM TO BE VERIFIED IN FIELD TO ASSURE LOCATION & FIT OF UTILITY BRIDGE BEARINGS & DRY DOCK MOORING GRIPPERS.

1/8" = 1'-0" 8' 0 8' 16'
3/8" = 1'-0" 2' 0 2' 4' 6'
1" = 1'-0" 1' 0 1' 2'

REVISION NO.	DESCRIPTION
	~~ISSUED~~
	APR 30 1982
	B. I. W. ~~PLANT ENGRS.~~

CE MAGUIRE, INC.
Architects • Engineers • Planners
60 First Avenue Waltham, Massachusetts 02254
THE MAGUIRE GROUP

BIW
PORTLAND SHIP REPAIR FACILITY
BATH IRON WORKS CORPORATION
Bath, Maine

DESIGNED BY: J.S. R.P.M.
DRAWN BY: S.F.M. A.J.B.
CHECKED BY: R.P.M. J.G.
PROJECT NO: 3995

TITLE: DRY DOCK MOORING PLATFORM I PLANS AND ELEVATIONS

DATE: APRIL, 1982
SCALE: AS NOTED

D-35
DRAWING NO.
10535
BIW DRAWING NO.

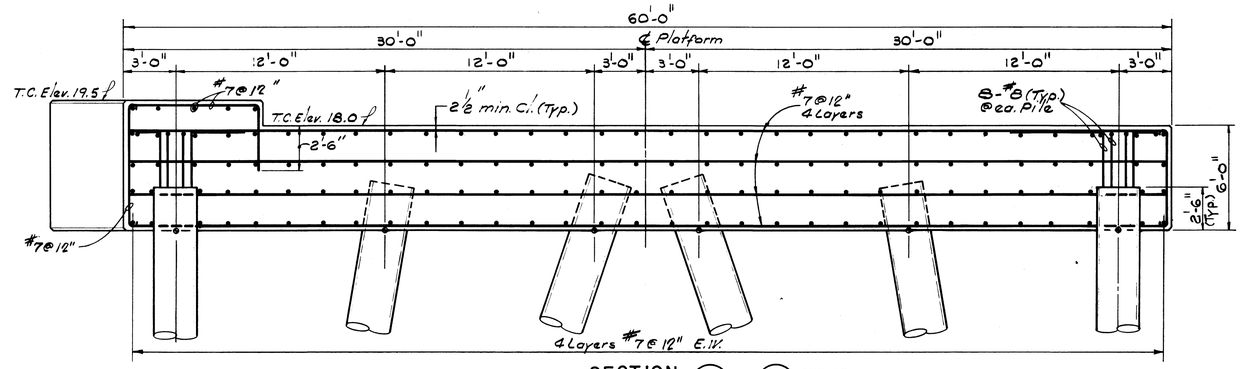

SECTION (S-1 / D-35) — (S-1 / D-36) SIMILAR
1/4" = 1'-0"

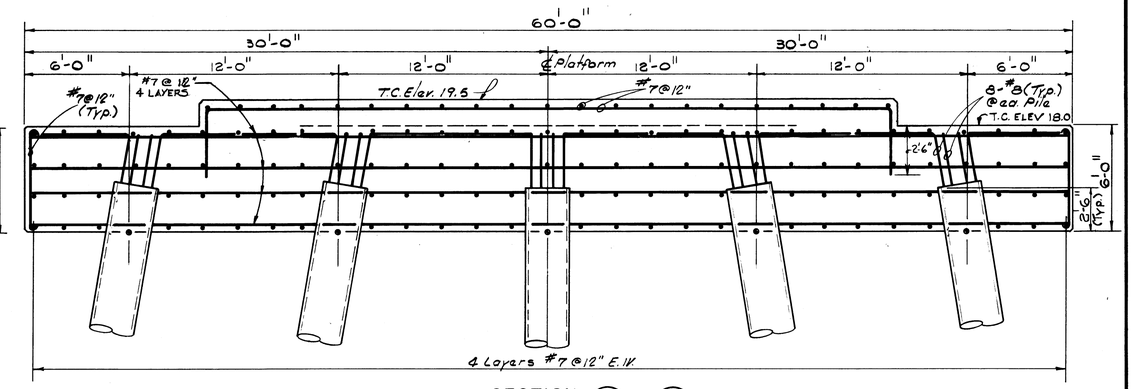

SECTION (S-2 / D-35) — (S-2 / D-36) SIMILAR
1/4" = 1'-0"

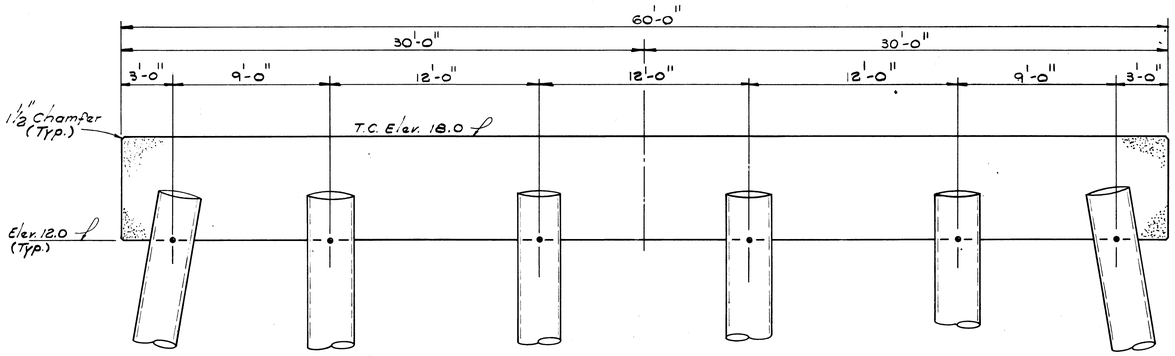

SECTION (S-3 / D-35) — (S-3 / D-36) SIMILAR
1/4" = 1'-0"

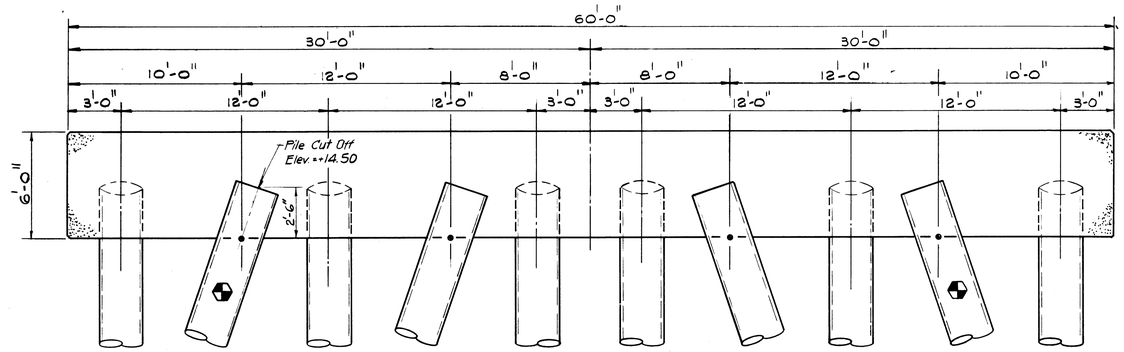

SECTION (S-4 / D-35) — (S-4 / D-36) SIMILAR
1/4" = 1'-0"

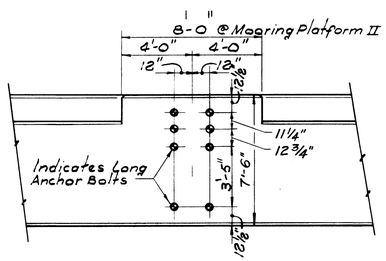

SECTION (S-5A / D-37)
1/4" = 1'-0"

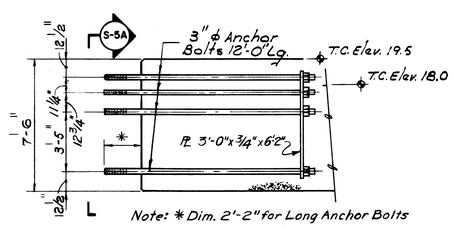

SECTION (S-5 / D-36) — (S-6 / D-35) SIMILAR
1/4" = 1'-0"

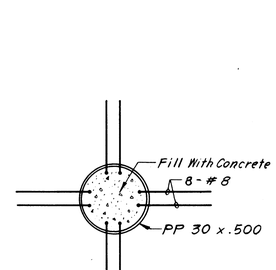

PLAN
3/8" = 1'-0"

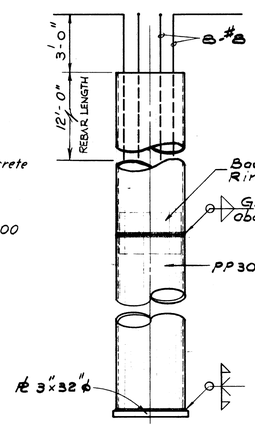

PILE DETAIL
3/8" = 1'-0"

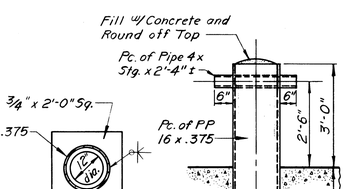

SECTION B-B
1/2" = 1'-0"

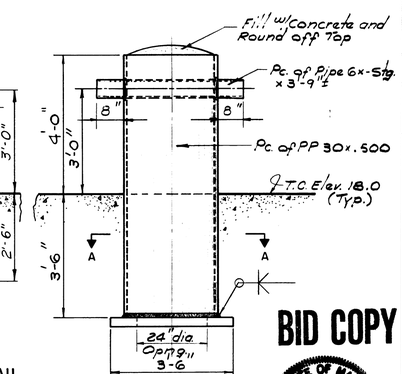

SMALL BOLLARD DETAIL
1/2" = 1'-0"

LARGE BOLLARD DETAIL
1/2" = 1'-0"

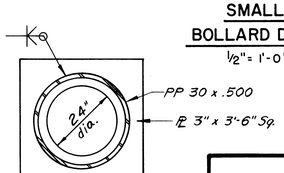

SECTION A-A
1/2" = 1'-0"

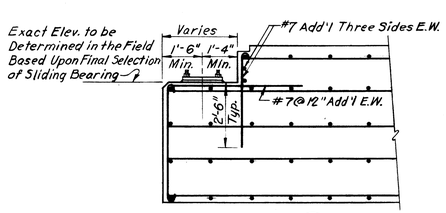

SECTION (7 / D-35)
3/8" = 1'-0"

GENERAL NOTES

1. ALL MATERIAL AND WORKMANSHIP TO BE IN ACCORDANCE WITH THE APPLICABLE SPECIFICATIONS.
2. ALL PILES ARE PP30x.500 CONFORMING TO REQUIREMENTS OF ASTM-A252, GRADE 2, HAVING A MINIMUM TENSILE YIELD STRENGTH OF 35,000 PSI.
3. ALL PILES SHALL BE FILLED WITH CONCRETE HAVING A MINIMUM 28 DAY COMPRESSIVE STRENGTH OF 3000 PSI.
4. ALL PILES SHALL BE DRIVEN CLOSED ENDED TO A NOMINAL BEARING CAPACITY OF 150 SHORT TONS AS DETERMINED BY FORMULA IN ACCORDANCE WITH THE APPLICABLE SPECIFICATIONS.
5. ALL PILES SHALL BE CUT OFF SQUARE AT ELEVATION SHOWN AND BE PROTECTED WITH TEMPORARY STEEL CAPS UNTIL FILLED WITH CONCRETE.
6. PILES SHALL BE DRIVEN IN ONE PIECE AS FAR AS POSSIBLE. SPLICES DURING DRIVING SHALL BE LIMITED TO TWO PER PILE AND SPLICES OF ADJACENT PILES SHALL BE AT STAGGERED ELEVATIONS IN ACCORDANCE WITH THE SPECIFICATIONS.
7. ALL PILES TO RECEIVE PROTECTIVE COATING AND CATHODIC PROTECTION IN ACCORDANCE WITH THE APPLICABLE SPECIFICATIONS. PROTECTIVE COATING SHALL EXTEND FROM THE TOP OF PILE TO ELEV. -70.0

NOTE: PILES MARKED THUS ◆ ARE TO BE OMITTED FROM MOORING PLATFORM II

1/4" = 1'-0" 4' 0 4' 8'
1/2" = 1'-0" 2' 0 2' 4'
3/8" = 1'-0" 2 0 2' 4' 6'

BID COPY

STATE OF MAINE — JOHN W. GAYTHWAITE 3411 — REGISTERED PROFESSIONAL ENGINEER

REVISION NO.	DESCRIPTION
	ISSUED
	APR 30 1982
	B. I. W. PLANT ENGRS.

CE MAGUIRE, INC.
Architects • Engineers • Planners
60 First Avenue, Waltham, Massachusetts 02254
THE MAGUIRE GROUP

BIW
PORTLAND SHIP REPAIR FACILITY
BATH IRON WORKS CORPORATION
Bath, Maine

DESIGNED BY: J.W.G.
DRAWN BY: A.J.B. S.F.M.
CHECKED BY: J.W.G.
PROJECT NO: 3995

TITLE: DRY DOCK MOORING PLATFORMS I & II SECTIONS AND DETAILS

DATE: APRIL, 1982
SCALE: AS NOTED

D-37
DRAWING NO.
10537
BIW DRAWING NO.