STATE OF MAINE
DEPARTMENT OF TRANSPORTATION

SPECIFICATIONS

Design: Load and Resistance Factor Design per AASHTO LRFD Bridge Design Specifications, Fifth Edition 2010.

DESIGN LOADING

Live Load - Strength I Case ..... HL - 93 Modified
Live Load - All Other Cases ..... HL - 93

TRAFFIC DATA

Current (2010) AADT 1060
Future (2030) AADT 1270
DHV - % of AADT 11
Design Hour Volume 140
Heavy Trucks (% of AADT) 8
Heavy Trucks (% of DHV) 6
Directional Distribution (% of DHV) 55
18 kip Equivalent P 2.0 42
18 kip Equivalent P 2.5 40
Design Speed (mph) 40

HYDROLOGIC DATA

Drainage Area ..... 17 sq mi
Design Discharge (Q50) ..... 1486 cfs
Check Discharge (Q100) ..... 1719 cfs
Headwater Elevation (Q50) ..... 166.94 ft
Headwater Elevation (Q100) ..... 168.48 ft
Discharge Velocity (Q50) ..... 2.52 fps
Discharge Velocity (Q100) ..... 2.57 fps
Headwater Elevation (Q1.1) ..... 163.00 ft
Discharge Velocity (Q1.1) ..... 1.00 fps

MATERIALS

Concrete:
- Curbs & Transition Barriers ..... Class "LP"
- Precast ..... Class "P"
- All Other ..... Class "A"

Reinforcing Steel ..... ASTM A 615/A 615M, Grade 60
Prestressing Strands ..... AASHTO 203 (ASTM A 416), Grade 270, Low Relaxation

BASIC DESIGN STRESSES

Concrete ..... f 'c = 4350 psi
Precast Concrete ..... f 'c = 7500 psi
f 'ci = 5500 psi
Reinforcing Steel ..... f y = 60,000 psi
Prestressing Strand ..... F pμ = 270,000 psi

MONMOUTH
KENNEBEC COUNTY
JOCK STREAM BRIDGE
OVER
JOCK STREAM
COBBOSSEECONTEE ROAD
PROJECT NO. BR-1671(600)X
PROJECT LENGTH 0.095 mi.
BRIDGE REPLACEMENT
BRIDGE NO. 2412

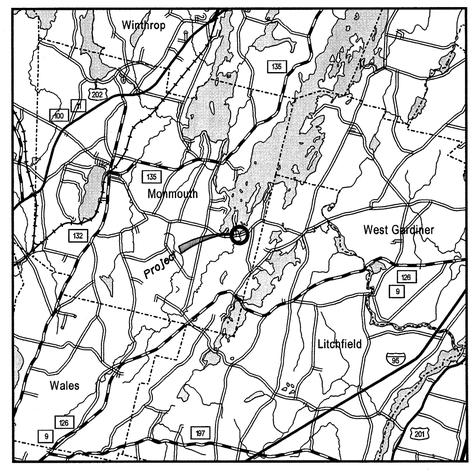

LOCATION MAP

2 0 2 4
Scale of Miles

LIST OF DRAWINGS

Title Sheet 1
Estimated Quantities & Notes 2
General Plan 3
Profile 4
Boring Location Plan & Interpretive Subsurface Profile 5
Boring Logs 6
Highway Approach Cross - Sections ..... 7 - 11
Abutments 12
Abutment Details 13
Precast Voided Slabs 14
Superstructure 15
Superstructure Reinforcing 16
Detour Plan 17
Right of Way Map 18

UTILITIES

Central Maine Power Company
Community Services Telephone
Time Warner Cable

MAINTENANCE OF TRAFFIC

The bridge will be closed to traffic during construction for a time period specified in the Special Provisions. Traffic shall be detoured as shown on the Detour Plan.

PIN 16716.00

BR-1671(600)X

STATE OF MAINE
DEPARTMENT OF TRANSPORTATION
APPROVED
COMMISSIONER: DATE 8/25/10
CHIEF ENGINEER: DATE 8/25/10

STATE OF MAINE Roger M. Nisous 9918 LICENSED PROFESSIONAL ENGINEER

SIGNATURE
P.E. NUMBER 9918
DATE AUG 24 2010

PROJECT INFORMATION

PROGRAM	BRIDGE PROGRAM
PROJECT MANAGER	KEVIN CUMMINGS
DESIGNER	ROGER NIAOUS
CONSULTANT	N/A
PROJECT RESIDENT	
CONTRACTOR	
PROJECT COMPLETION DATE	

MONMOUTH
JOCK STREAM BRIDGE
TITLE SHEET

SHEET NUMBER
1
OF 18

Filename:\00\BRIDGE\MSTA\001_Title.dgn Division: BRIDGE Username: dana.damren Date:8/23/2010

ESTIMATED QUANTITIES

ITEM NO.	DESCRIPTION	QUANTITY	UNIT
202.19	REMOVING EXISTING BRIDGE (240 CY)	1	LS
203.20	COMMON EXCAVATION	490	CY
203.25	GRANULAR BORROW	475	CY
206.082	STRUC. EARTH EXCAVATION - MAJOR STRUCTURES	385	CY
304.10	AGGREGATE SUBBASE COURSE - GRAVEL	1210	CY
403.210	HOT MIX ASPHALT 9.5 MM HMA	354	T
403.213	HOT MIX ASPHALT 12.5 MM BASE	108	T
409.15	BITUMINOUS TACK COAT, APPLIED	87	GAL
501.231	DYNAMIC LOADING TEST	2	EA
501.50	STEEL H-BEAM PILES 89 LBS/FT, DELIVERED	1270	LF
501.501	STEEL H-BEAM PILES 89 LBS/FT, IN PLACE	1270	LF
501.90	PILE TIPS	10	EA
501.91	PILE SPLICES	30	EA
501.92	PILE DRIVING EQUIPMENT MOBILIZATION	1	LS
502.219	STRUC. CONC. ABUTMENTS AND RETAINING WALLS (68 CY)	1	LS
502.261	STRUC. CONC. RDWY. & SDWLK. SLAB ON CONC. BRIDGE (42 CY)	1	LS
502.31	STRUCTURAL CONCRETE APPROACH SLABS (22 CY)	1	LS
502.49	STRUCTURAL CONCRETE CURBS AND SIDEWALK (8 CY)	1	LS
503.12	REINFORCING STEEL, FABRICATED AND DELIVERED	17,600	LB
503.13	REINFORCING STEEL, PLACING	17,600	LB
503.14	EPOXY COATED REINF. STEEL, FAB. AND DELIVERED	380	LB
503.15	EPOXY COATED REINF.STEEL PLACING	380	LB
507.0811	STEEL BRIDGE RAILING, 2 BAR (100 LF)	1	LS
508.14	HIGH PERFORMANCE WATERPROOFING MEMBRANE (295 SY)	1	LS
511.07	COFFERDAM: ABUTMENT NO. 1	1	LS
511.07	COFFERDAM: ABUTMENT NO. 2	1	LS
514.06	CURING BOX FOR CONCRETE CYLINDERS	1	EA
515.21	PROTECTIVE COATING FOR CONCRETE SURFACES (160 SY)	1	LS
526.301	TEMPORARY CONCRETE BARRIER TYPE I (60 LF)	1	LS
526.34	PERMANENT CONCRETE TRANSITION BARRIER	4	EA
527.303	ENERGY ABSORBING SYSTEM (ET-PLUS)	4	EA
535.60	PRESTRESSED STRUCTURAL CONCRETE SLAB (90 CY)	1	LS
606.1721	BRIDGE TRANSITION - TYPE 1	4	EA
606.23	GUARDRAIL TYPE 3C - SINGLE RAIL	650	LF
606.353	REFLECTORIZED FLEXIBLE GUARDRAIL MARKER	8	EA
610.08	PLAIN RIPRAP	2050	CY
610.16	HEAVY RIPRAP	550	CY
620.58	EROSION CONTROL GEOTEXTILE	1500	SY
627.7333	4" WHITE OR YELLOW PAINTED PAVEMENT MARKING LINE	1800	LF
629.05	HAND LABOR, STRAIGHT TIME	10	HR
631.10	AIR COMPRESSOR (INCLUDING OPERATOR)	10	HR
631.11	AIR TOOL (INCLUDING OPERATOR)	10	HR
631.14	GRADER (INCLUDING OPERATOR)	10	HR
631.12	ALL PURPOSE EXCAVATOR (INCLUDING OPERATOR)	10	HR
631.172	TRUCK - LARGE (INCLUDING OPERATOR)	10	HR
639.18	FIELD OFFICE TYPE A	1	EA
652.312	TYPE III BARRICADE	6	EA
652.33	DRUM	20	EA
652.34	CONE	75	EA
652.35	CONSTRUCTION SIGNS	350	SF
652.361	MAINTENANCE OF TRAFFIC CONTROL DEVICES (184 CD)	1	LS
652.38	FLAGGER	100	HR
656.75	TEMPORARY SOIL EROSION AND WATER POLLUTION CONTROL	1	LS
659.10	MOBILIZATION	1	LS

GENERAL CONSTRUCTION NOTES

1. During construction, the road will be closed to traffic for a time period specified in the Special Provisions.

2. For easements, construction limits and right of way lines, refer to Right of Way Map.

3. All utility facilities shall be adjusted by the respective utilities unless otherwise noted.

4. Do not excavate for Aggregate Subbase Course where existing material is suitable as determined by the Resident.

5. In areas where the Resident directs the Contractor not to excavate to the subgrade line shown on the plans, payment for removing existing pavement, grubbing, shaping, ditching, and compacting the existing subbase and layers of new subbase 6 inches or less thick will be made under appropriate equipment rental items.

6. All embankment material, except as otherwise shown, placed below EL. 167.00' shall be Granular Borrow meeting the requirements of Subsection 703.19, Material for Underwater Backfill.

7. Construct the riprap shelf at each abutment at EL.164.8.

8. Guardrail posts as shown in the Standard Details shall be modified from the indicated length of 6 feet to a length of 7 feet with an embedment of 4.5 feet. Payment will be considered incidental to the guardrail pay items.

9. Protective Coating for Concrete Surfaces shall be applied to the following areas:

All exposed surfaces of concrete curbs.
Fascias down to the drip notch.
All exposed surfaces of Concrete Transition Barriers.
Abutments faces on the stream side to bottom of the riprap shelf.

10. Project information referred to below may be accessed at the following MaineDOT web address: http://www.maine.gov/mdot/comprehensive-list-projects/project-information.php.

11. The existing bridge plans may be accessed at the MaineDOT web address. The plans are reproductions of the original drawings as prepared for the construction of the bridge. It is very unlikely that the plans will show any construction field changes or any alterations which may have been made to the bridge during its life span.

12. The hydrologic report of the bridge site may be accessed at the MaineDOT web address. The hydrologic report is based on MaineDOT's interpretation of the information obtained for the subject site. No assurance is given that the information or the conclusions of the report will be representative of actual conditions at the time of construction.

13. The project geotechnical report titled: GEOTECHNICAL DESIGN REPORT For the Replacement of: JOCK STREAM BRIDGE OVER JOCK STREAM, MONMOUTH, MAINE, Soils Report No. 2009-32, and addendum dated June 30, 2010, may be accessed at the MaineDOT web address.

14. Geotechnical information furnished or referred to in this plan set is for the use of the Bidders and the Contractor. No assurance is given that the information or interpretations will be representative of actual subsurface conditions at the construction site. MaineDOT will not be responsible for the Bidders' or Contractor's interpretations of, or conclusions drawn from, the geotechnical information. The boring logs contained in the plan set present factual and interpretive subsurface information collected at discrete locations. Data provided may not be representative of the subsurface conditions between the boring locations.

15. Quantities included for pay items measured and paid for by Lump Sum are estimated quantities and are provided by MaineDOT for informational purposes only. Lump Sum pay items will be paid for at the Contract Bid amount, with no addition or reduction in payment to the Contractor if the actual final quantities are different from the MaineDOT provided estimated quantities, except as follows:

a. If a Lump Sum pay item is eliminated, the requirements of Standard Specifications Section 109.2, Elimination of Items, will take precedence.

b. If other Contract Documents specifically allow a change in payment for a Lump Sum pay item, those requirements will be followed.

c. If a design change results in changes to estimated quantities for Lump Sum pay items, price adjustments will be made in accordance with Standard Specifications Section 109.7, Equitable Adjustments to Compensation.

16. The Contractor shall submit a Bridge Demolition Plan to the Resident at least 10 business days prior to the start of demolition work. The plan shall outline the methods and equipment to be used to remove and dispose of all materials included in the existing bridge. No work related to the removal of the bridge shall be undertaken by the Contractor until MaineDOT has reviewed the Bridge Demolition Plan for appropriateness and completeness. Payment for all work necessary for developing, submitting and finalizing the Demolition Plan will be considered incidental to the bridge removal pay item.

STATE OF MAINE
DEPARTMENT OF TRANSPORTATION

BR-1671(600)X

PIN 16716.00

BRIDGE NO. 2412

BRIDGE PLANS

		BY	DATE
PROJ. MANAGER	K. Cummings		
DESIGN-DETAILED	R. Noous	Team South	Aug. 2010
CHECKED-REVIEWED	G. Gustafson	Team South	Aug. 2010
DESIGN2-DETAILED2	------	------	------
DESIGN3-DETAILED3	------	------	------
REVISIONS 1	------	------	------
REVISIONS 2	------	------	------
REVISIONS 3	------	------	------
REVISIONS 4	------	------	------
FIELD CHANGES	------	------	------

SIGNATURE

P.E. NUMBER

DATE

JOCK STREAM BRIDGE
JOCK STREAM
MONMOUTH KENNEBEC COUNTY

ESTIMATED QUANTITIES

SHEET NUMBER
2
OF 18

Filename: ...\BRIDGE\MSTA\002_Estimate.dgn Division: BRIDGE Username: alan.nadeau Date:9/10/2010

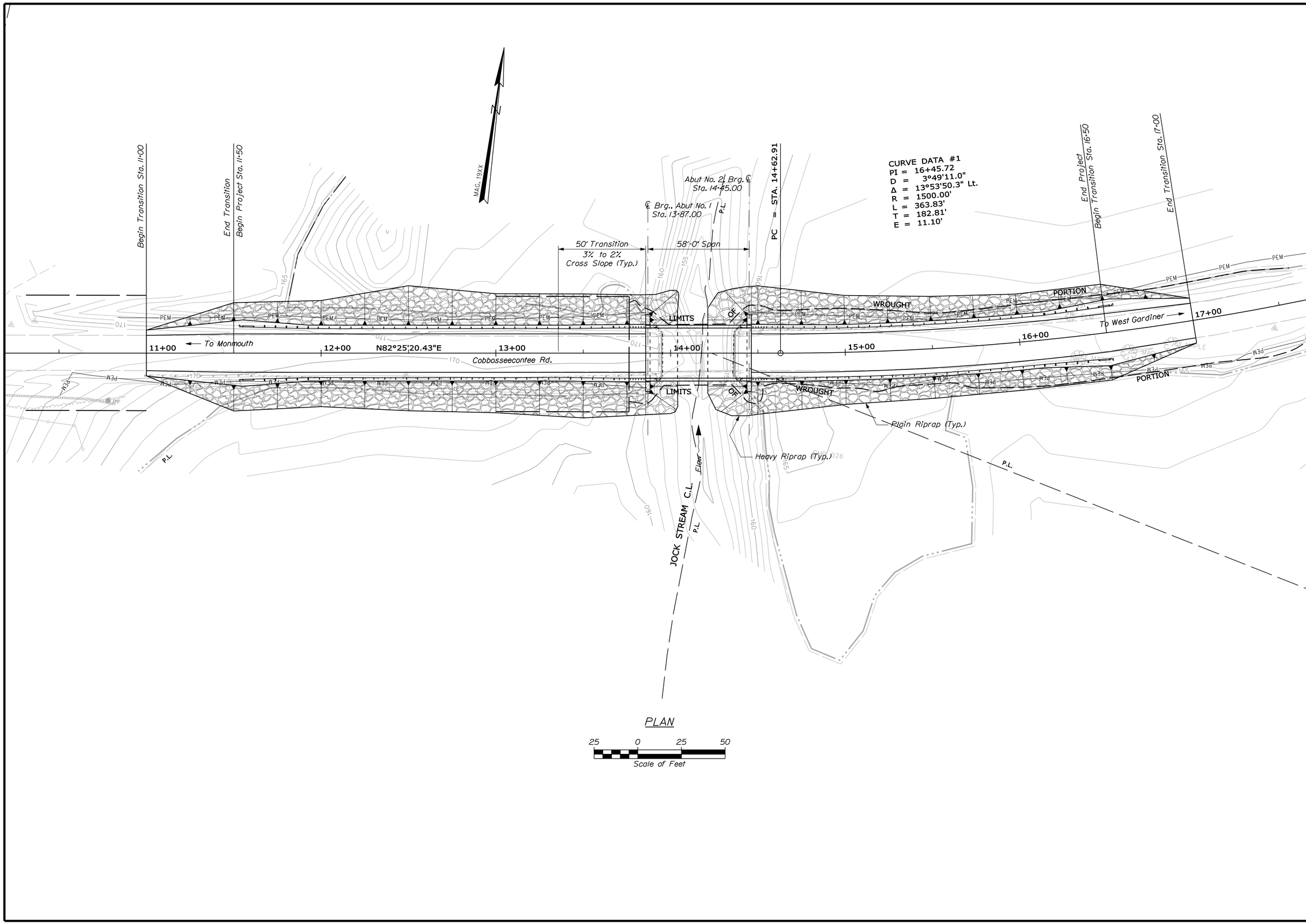

STATE OF MAINE
DEPARTMENT OF TRANSPORTATION

BR-1671(600)X

PIN 16716.00

BRIDGE NO. 2412

BRIDGE PLANS

		BY	DATE
PROJ. MANAGER	K. Cummings		
DESIGN-DETAILED	R. Noous	Team South	Aug. 2010
CHECKED-REVIEWED	C. Gustafson	-----	-----
DESIGN2-DETAILED2	-----	-----	-----
DESIGN3-DETAILED3	-----	-----	-----
REVISIONS 1	-----	-----	-----
REVISIONS 2	-----	-----	-----
REVISIONS 3	-----	-----	-----
REVISIONS 4	-----	-----	-----
FIELD CHANGES	-----	-----	-----

SIGNATURE

P.E. NUMBER

DATE

JOCK STREAM BRIDGE
JOCK STREAM
MONMOUTH KENNEBEC COUNTY

GENERAL PLAN

SHEET NUMBER

3

OF 18

Filename: ...\MSTA\003_GeneralPlan.dgn Division: BRIDGE Username: dana.damren Date:9/9/2010

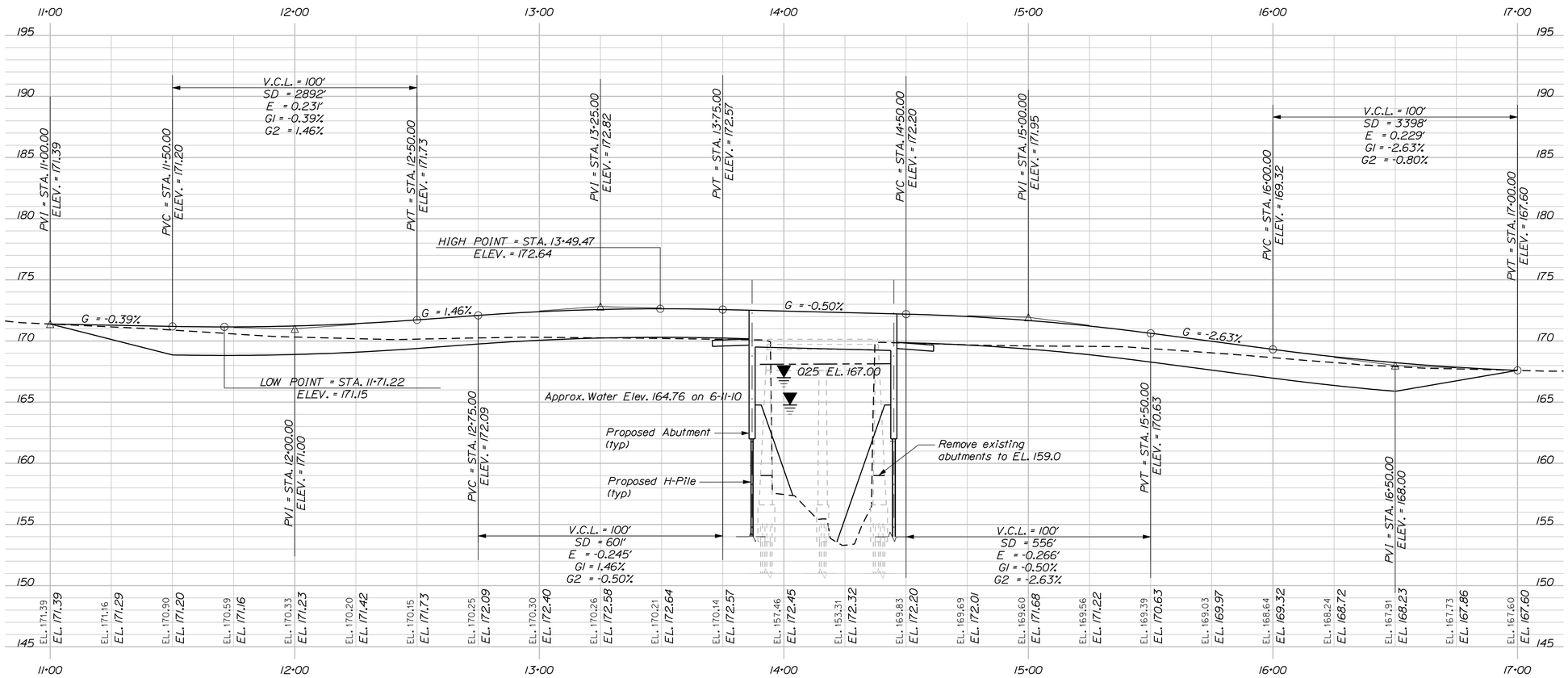

PROFILE

STATE OF MAINE
DEPARTMENT OF TRANSPORTATION

BR-1671(600)X

PIN 16716.00

BRIDGE NO. 2412

BRIDGE PLANS

		BY	DATE
PROJ. MANAGER	K. Cummings		
DESIGN-DETAILED	R. Noous	Team South	Aug. 2010
CHECKED-REVIEWED	G. Gustafson		
DESIGN2-DETAILED2			
DESIGN3-DETAILED3			
REVISIONS 1			
REVISIONS 2			
REVISIONS 3			
REVISIONS 4			
FIELD CHANGES			

SIGNATURE

P.E. NUMBER

DATE

JOCK STREAM BRIDGE
JOCK STREAM
KENNEBEC COUNTY
MONMOUTH

PROFILE

SHEET NUMBER

4

OF 18

Filename: ...\00\bridge\msta\004_Profile.dgn Division: BRIDGE Username: alan.nadeau Date:8/30/2010

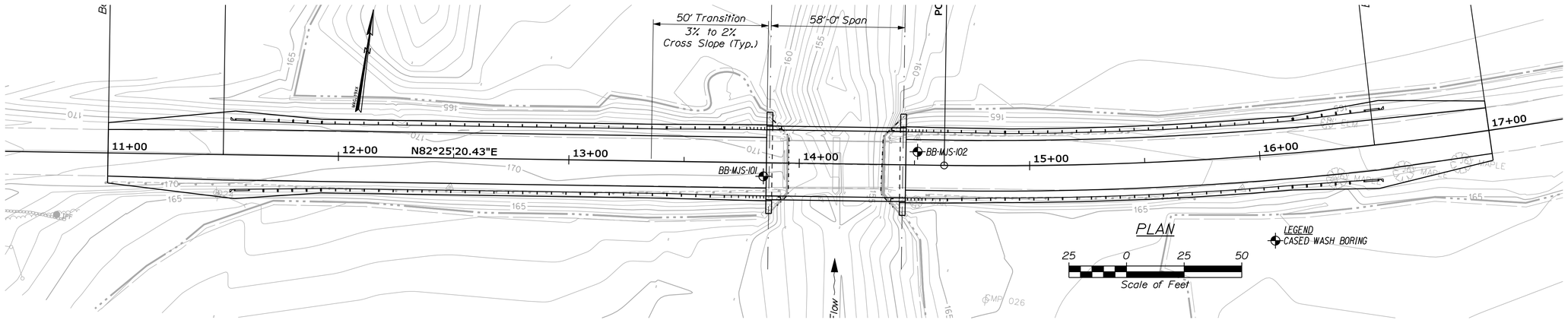

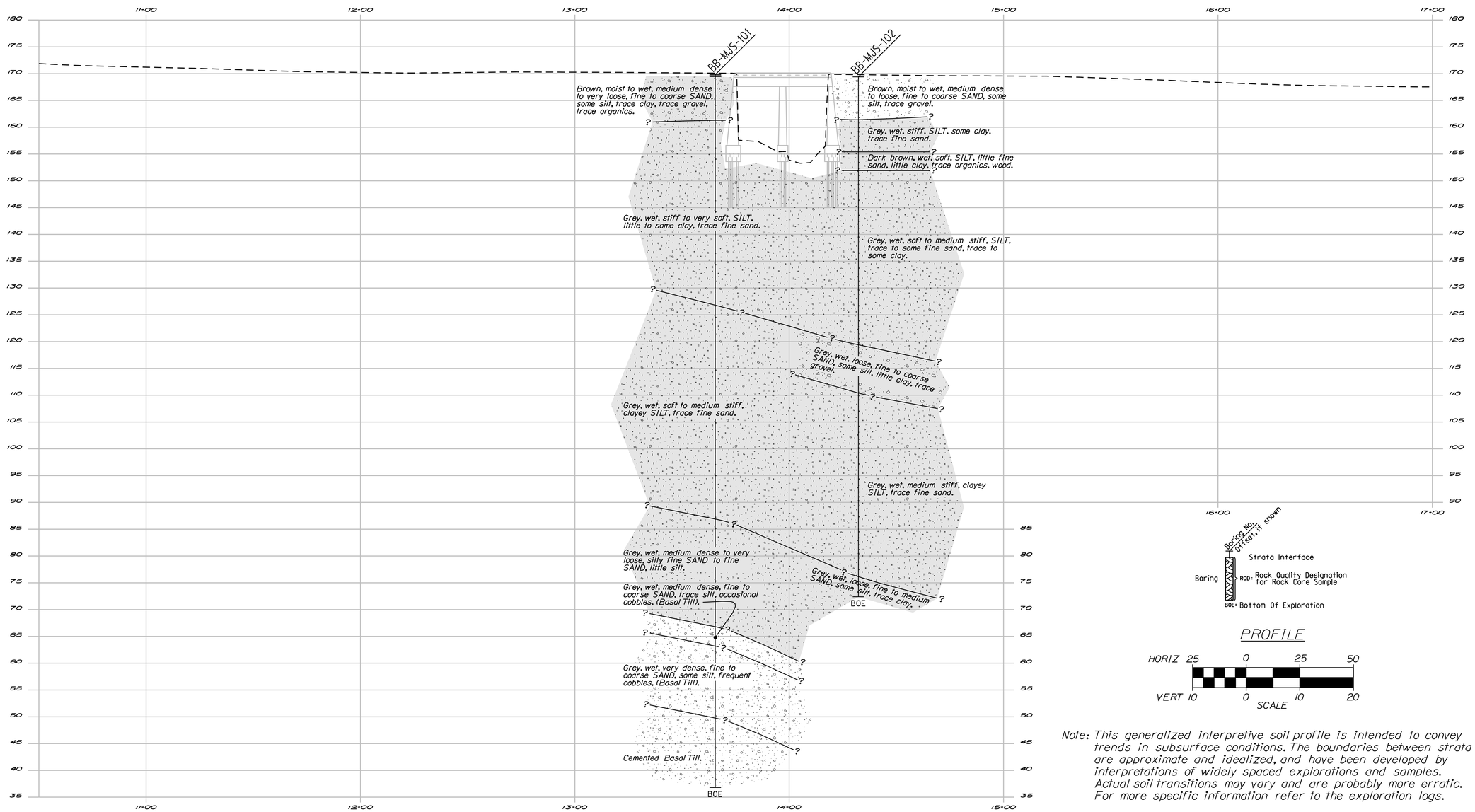

Note: This generalized interpretive soil profile is intended to convey trends in subsurface conditions. The boundaries between strata are approximate and idealized, and have been developed by interpretations of widely spaced explorations and samples. Actual soil transitions may vary and are probably more erratic. For more specific information refer to the exploration logs.

STATE OF MAINE
DEPARTMENT OF TRANSPORTATION

BR-1671(600)X

PIN 16716.00

BRIDGE NO. 2412

BRIDGE PLANS

	BY	DATE
PROJ. MANAGER		
DESIGN-DETAILED	K. MAGUIRE	T. WHITE	OCT 2009
CHECKED-REVIEWED			
DESIGN2-DETAILED2			
DESIGN3-DETAILED3			
REVISIONS 1			
REVISIONS 2			
REVISIONS 3			
REVISIONS 4			
FIELD CHANGES			

SIGNATURE

P.E. NUMBER

DATE

JOCK STREAM BRIDGE
JOCK STREAM
MONMOUTH KENNEBEC COUNTY

BORING LOCATION PLAN &
INTERPRETIVE SUBSURFACE PROFILE

SHEET NUMBER
5
OF 18

Filename: ...\GEOTECH\MSTA\005_BLP&ISP1.dgn Division: BRIDGE Username: alan.nadeau Date:8/30/2010

Filename: ...\MSTA\006_BORING LOGS1.dgn Division: BRIDGE Username: alan.nadeau Date:8/30/2010

Maine Department of Transportation — Soil/Rock Exploration Log — US CUSTOMARY UNITS

Project: Jock Stream Bridge #2412 carrying Cobbosseecontee Road over Jock
Location: Monmouth, Maine

Boring No.: BB-MJS-101
PIN: 16716.00

Driller:	MaineDOT	Elevation (ft.)	169.8	Auger ID/OD:	5" Solid Stem
Operator:	E. Giguere, C. Giles	Datum:	NAVD 88	Sampler:	Standard Split Spoon
Logged By:	B. Wilder	Rig Type:	CME 45C	Hammer Wt./Fall:	140#/30"
Date Start/Finish:	6/16,19,24/09	Drilling Method:	Cased Wash Boring	Core Barrel:	NQ-2"
Boring Location:	13+65.5, 5.9 Rt.	Casing ID/OD:	HW	Water Level*:	9.0' bgs.
Hammer Efficiency Factor: 0.84		Hammer Type:	Automatic ☒ Hydraulic ☐ Rope & Cathead ☐		

Definitions:
D = Split Spoon Sample
MD = Unsuccessful Split Spoon Sample attempt
U = Thin Wall Tube Sample
MU = Unsuccessful Thin Wall Tube Sample attempt
V = Insitu Vane Shear Test, PP = Pocket Penetrometer
MV = Unsuccessful Insitu Vane Shear Test attempt
R = Rock Core Sample
SSA = Solid Stem Auger
HSA = Hollow Stem Auger
RC = Roller Cone
WOH = weight of 140lb. hammer
WOR/C = weight of rods or casing
WO1P = Weight of one person
S_u = Insitu Field Vane Shear Strength (psf)
S_{ur} = Pocket Torvane Shear Strength (psf)
q_p = Unconfined Compressive Strength (ksf)
N-uncorrected = Raw field SPT N-value
Hammer Efficiency Factor = Annual Calibration Value
N_{60} = SPT N-uncorrected corrected for hammer efficiency
N_{60} = (Hammer Efficiency Factor/60%)*N-uncorrected
$S_{u(lab)}$ = Lab Vane Shear Strength (psf)
WC = water content, percent
LL = Liquid Limit
PL = Plastic Limit
PI = Plasticity Index
G = Grain Size Analysis
C = Consolidation Test

Depth (ft.)	Sample No.	Pen./Rec. (in.)	Sample Depth (ft.)	Blows (/6 in.) Strength (psf) or RQD (%)	N-uncorrected	N_{60}	Casing Blows	Elevation (ft.)	Visual Description and Remarks	Laboratory Testing Results/ AASHTO and Unified Class
0							55A	169.45	Pavement — 0.35	
	1D	24/20	1.00 - 3.00	4/7/5/5	12	17			Brown, moist, medium dense, fine to coarse SAND, some silt, trace gravel.	G#212264 A-2-4, SM WC=10.5%
5	2D	24/18	5.00 - 7.00	1/1/1/50	2	3			Brown, wet, very loose, fine to coarse SAND, some silt, trace clay, trace gravel, trace organics.	G#212265 A-4, SC-SM WC=19.9%
								161.30	8.50	
10	MD	24/0	10.00 - 12.00	2/2/2/3	4	6	22		Failed sample attempt, similar to 30, medium stiff, off auger flight.	
							29			
							25			
							26			
15	3D	24/21	14.00 - 16.00	3/4/4/4	8	11	38		Grey, wet, stiff, SILT, little clay, trace fine sand.	G#212266 A-4, CL-ML WC=24.0% Non-plastic
							38			
							36			
							31			
							31			
20	4D	24/17	19.00 - 21.00	1/1/WOH/WOH	1	1	29		Grey, wet, very soft, SILT, little clay, trace fine sand.	G#212267 A-4, CL-ML WC=26.0% Non-plastic
							22			
							20			
							16			
							15			
25	5D	24/20	24.00 - 26.00	WOH/WOH/WOH/WOH	---		33		Grey, wet, soft, SILT, some clay, trace fine sand.	G#212268 A-4, CL-ML WC=25.4% Non-plastic
							26		Roller Coned ahead to 27.0' bgs.	
	V1		26.00 - 26.37	Sum312/89 psf			25		55x130 mm vane raw torque readings: V1: 7.0/2.0 ft-lbs	
	V2		27.00 - 27.37	Sum312/45 psf			22		V2: 7.0/1.0 ft-lbs	
							19			
30	6D	24/24	29.00 - 31.00	WOR/WOR/WOR/WOR	---		36		Grey, wet, soft, SILT, some clay, trace fine sand.	G#212269 A-4, CL-ML WC=26.2% LL=23 PL=18 PI=5
							33			
	V3		31.00 - 31.43	Sum247/55 psf			28		65x130 mm vane raw torque readings: V3: 9.0/2.0 ft-lbs	
	V4		32.00 - 32.43	Sum384/69 psf			28		V4: 14.0/2.5 ft-lbs	
							28			
	MU/7D	24/12	34.00 - 36.00	WOR/WOR/WOR/WOR	---		38		Failed Piston Sampler attempt. Grey, wet, soft, SILT, some clay, trace fine sand.	G#212270 A-4, CL-ML WC=26.8% Non-plastic
							32			
	V5		36.00 - 36.43	Sum494/41 psf			35		65x130 mm vane raw torque readings: V5: 18.0/1.5 ft-lbs	
	V6		37.00 - 37.43	Sum384/27 psf			36		V6: 14.0/1.0 ft-lbs	
							33			
							0WP		0WP=Hydraulic Push	
40	MU/8D	24/4	40.50 - 42.50	WOR/WOR/WOR/WOR	---		26		Failed Piston Sampler attempt. Grey, wet, soft, SILT, some clay, trace fine sand.	
							50			
	V7		42.50 - 42.93	Sum384/55 psf			37		65x130 mm vane raw torque readings: V7: 14.0/2.0 ft-lbs	
	V8		43.50 - 43.93	Sum494/41 psf			38	126.80	V8: 18.0/1.5 ft-lbs — 43.00	
							38			
45	MV 9D	24/20	45.00 - 45.20 Weight 47.00	Would Not Push WOR/WOR/WOR/WOR	---		38		Failed 65x130 mm vane attempt. Grey, wet, soft, Clayey SILT with 1/2" fine sand layer.	G#212271 A-4, CL-ML WC=32.4%
							31			
							28			
							30			
50	MU 10D	24/0 24/24	49.00 - 51.00 Wt=50.00 51.00	WOR/WOR/WOR/WOR	---		30		Failed Piston Sampler attempt, let tube set 45 minutes. Grey, wet, soft to medium stiff, Clayey SILT, trace fine sand.	G#212272 A-4, CL-ML WC=27.8% LL=23 PL=17 PI=6
							30			
	V10		51.00 - 51.43	Sum220/55 psf			27		65x130 mm vane raw torque readings: V10: 8.0/2.0 ft-lbs	
	V11		52.00 - 52.43	Sum522/69 psf			26		V11: 19.0/2.5 ft-lbs	
							25			
55	1U	24/14	54.00 - 56.00	Piston Sampler			32		Grey, wet, soft, Clayey SILT, trace fine sand. Let tube set 60 minutes.	G.C#212273 A-4, CL WC=33.4% LL=25 PL=17 PI=7
							29			
	V12		56.00 - 56.43	Sum494/55 psf			32		65x130 mm vane raw torque readings: V12: 18.0/2.0 ft-lbs	
	V13		57.00 - 57.43	Sum467/41 psf			24		V13: 17.0/1.5 ft-lbs	
							24			
60	V14 11D	24/24	59.00 - 59.43 61.00 - 61.43	Sum494/82 psf WOR/WOR/WOR/WOR	---		29		65x130 mm vane raw torque readings: V14: 18.0/3.0 ft-lbs Similar to above, soft to medium stiff.	
	V15			Sum604/55 psf			29		V15: 22.0/2.0 ft-lbs	
							23			
							21			
							21			
65	2U	24/24	64.00 - 66.00	Piston Sampler			30		Grey, wet, soft to medium stiff, Clayey SILT, trace fine sand. Let tube set 20 minutes.	G.C#212274 A-4, CL WC=30.7% LL=26 PL=18 PI=8
							28			
	V16		66.00 - 66.43	Sum343/27 psf			28		65x130 mm vane raw torque readings: V16: 12.5/1.0 ft-lbs	
	V17		67.00 - 67.43	Sum618/82 psf			20		V17: 22.5/3.0 ft-lbs	
							22			
70	V18 12D	24/24	69.00 - 69.43 71.00 - 71.43	Sum756/27 psf WOR/WOR/WOR/WOR	---		31		65x130 mm vane raw torque readings: V18: 29.0/1.0 ft-lbs Grey, wet, medium stiff, Clayey SILT, trace fine sand.	G#212275 A-4, CL WC=26.3% LL=24 PL=16 PI=8
	V19		70.00 - 70.43	Sum687/96 psf			28		V19: 25.0/3.5 ft-lbs	
							26			
							21			
							23			
							0WP			

Remarks:

Stratification lines represent approximate boundaries between soil types; transitions may be gradual.

* Water level readings have been made at times and under conditions stated. Groundwater fluctuations may occur due to conditions other than those present at the time measurements were made.

Page 1 of 2 — Boring No.: BB-MJS-101

Maine Department of Transportation — Soil/Rock Exploration Log — US CUSTOMARY UNITS

Project: Jock Stream Bridge #2412 carrying Cobbosseecontee Road over Jock
Location: Monmouth, Maine

Boring No.: BB-MJS-101
PIN: 16716.00

Driller:	MaineDOT	Elevation (ft.)	169.8	Auger ID/OD:	5" Solid Stem
Operator:	E. Giguere, C. Giles	Datum:	NAVD 88	Sampler:	Standard Split Spoon
Logged By:	B. Wilder	Rig Type:	CME 45C	Hammer Wt./Fall:	140#/30"
Date Start/Finish:	6/16,19,24/09	Drilling Method:	Cased Wash Boring	Core Barrel:	NQ-2"
Boring Location:	13+65.5, 5.9 Rt.	Casing ID/OD:	HW	Water Level*:	9.0' bgs.
Hammer Efficiency Factor: 0.84		Hammer Type:	Automatic ☒ Hydraulic ☐ Rope & Cathead ☐		

Definitions:
D = Split Spoon Sample
MD = Unsuccessful Split Spoon Sample attempt
U = Thin Wall Tube Sample
MU = Unsuccessful Thin Wall Tube Sample attempt
V = Insitu Vane Shear Test, PP = Pocket Penetrometer
MV = Unsuccessful Insitu Vane Shear Test attempt
R = Rock Core Sample
SSA = Solid Stem Auger
HSA = Hollow Stem Auger
RC = Roller Cone
WOH = weight of 140lb. hammer
WOR/C = weight of rods or casing
WO1P = Weight of one person
S_u = Insitu Field Vane Shear Strength (psf)
S_{ur} = Pocket Torvane Shear Strength (psf)
q_p = Unconfined Compressive Strength (ksf)
N-uncorrected = Raw field SPT N-value
Hammer Efficiency Factor = Annual Calibration Value
N_{60} = SPT N-uncorrected corrected for hammer efficiency
N_{60} = (Hammer Efficiency Factor/60%)*N-uncorrected
$S_{u(lab)}$ = Lab Vane Shear Strength (psf)
WC = water content, percent
LL = Liquid Limit
PL = Plastic Limit
PI = Plasticity Index
G = Grain Size Analysis
C = Consolidation Test

Depth (ft.)	Sample No.	Pen./Rec. (in.)	Sample Depth (ft.)	Blows (/6 in.) Strength (psf) or RQD (%)	N-uncorrected	N_{60}	Casing Blows	Elevation (ft.)	Visual Description and Remarks	Laboratory Testing Results/ AASHTO and Unified Class
75	3U	24/20	75.50 - 77.50	Piston Sampler			54		Grey, wet, medium stiff, Clayey SILT, trace fine sand.	G.C#212301 A-6, CL WC=35.6% LL=35 PL=21 PI=14
							54			
	V20		77.50 - 77.93	Sum536/41 psf			50		65x130 mm vane raw torque readings: V20: 19.5/1.5 ft-lbs	
	MV			Would Not Push			43		Failed 65x130 mm vane attempt. Grey, wet, soft, Clayey SILT with 1/2" fine sand layers.	
80	13D	24/24	79.00 - 81.00	WOR/WOR/WOR/WOR	---		54			G#212302 A-6, CL WC=28.9% LL=31 PL=19 PI=12
							46			
	MV		81.00 - 81.50	Would Not Push			42		Failed 65x130 mm vane attempt.	
							58			
							66	86.90	82.90	
85	14D	24/17	84.00 - 86.00	8/8/11/16	19	27	40		Grey, wet, medium dense, Silty fine SAND.	G#212303 A-4, SM WC=23.0%
							41			
							47			
							64			
							73			
90	15D	24/15	89.00 - 91.00	2/4/4/5	8	11	27		Similar to above.	
							36			
							69			
							97			
							113			
95	16D	24/14	94.00 - 96.00	1/1/1/2	2	3	39		Grey, wet, very loose, fine SAND, little silt.	G#212304 A-2-4, SM WC=22.8%
							45			
							111			
							146			
							178			
100	17D	24/14	99.00 - 101.00	3/3/2/2	5	7	50		Grey, wet, loose, fine SAND, some silt.	G#212305 A-2-4, SM WC=23.5%
							37			
							38			
							69	106.80	103.00	
							183		Grey, wet, medium dense, fine to coarse SAND, little gravel, trace silt, occasional cobbles.	G#212306 A-3, SP-SM WC=17.4%
105	18D	24/17	104.00 - 106.00	7/3/15/32	18	25	330			
							88			
	R1	92.4/24	106.60 - 114.30				155 NQ-2	63.20	R1: COBBLES and GRAVEL. R1:Core Times (min:sec) 106.6-107.6' (2:45) 107.6-108.6' (1:10) 108.6-109.6' (1:53) 109.6-110.6' (2:40) 110.6-111.6' (3:20) 111.6-112.6' (2:49) 112.6-113.6' (1:20) 113.6-114.3' (2:00)	
110							215			
							190			
							166			
							417			
							450			
							800			
							BRKN NQ-2			
							RC		Roller Coned ahead to 129.0' bgs.	
115										
120								89.80	120.00	
									Cemented TILL at 120.0' bgs.	
125										
130	R2	48/6	129.00 - 133.00				NQ-2		R2: Grey, very dense, COBBLES and Cemented TILL. Put sample in jar. R2:Core Times (min:sec) 129.0-130.0' (1:42) 130.0-131.0' (1:10) 131.0-132.0' (0:30) 132.0-133.0' (0:30)	
								36.80	133.00	
135									Bottom of Exploration at 133.00 feet below ground surface. NO REFUSAL	
140										
145										
150										

Remarks:

Stratification lines represent approximate boundaries between soil types; transitions may be gradual.

* Water level readings have been made at times and under conditions stated. Groundwater fluctuations may occur due to conditions other than those present at the time measurements were made.

Page 2 of 2 — Boring No.: BB-MJS-101

Maine Department of Transportation — Soil/Rock Exploration Log — US CUSTOMARY UNITS

Project: Jock Stream Bridge #2412 carrying Cobbosseecontee Road over Jock
Location: Monmouth, Maine

Boring No.: BB-MJS-102
PIN: 16716.00

Driller:	MaineDOT	Elevation (ft.)	169.4	Auger ID/OD:	5" Solid Stem
Operator:	E. Giguere, C. Giles	Datum:	NAVD 88	Sampler:	Standard Split Spoon
Logged By:	B. Wilder	Rig Type:	CME 45C	Hammer Wt./Fall:	140#/30"
Date Start/Finish:	7/11,14/09	Drilling Method:	Cased Wash Boring	Core Barrel:	NQ-2"
Boring Location:	14+32.3, 5.8 Lt.	Casing ID/OD:	HW	Water Level*:	5.5' bgs.
Hammer Efficiency Factor: 0.84		Hammer Type:	Automatic ☒ Hydraulic ☐ Rope & Cathead ☐		

Definitions:
D = Split Spoon Sample
MD = Unsuccessful Split Spoon Sample attempt
U = Thin Wall Tube Sample
MU = Unsuccessful Thin Wall Tube Sample attempt
V = Insitu Vane Shear Test, PP = Pocket Penetrometer
MV = Unsuccessful Insitu Vane Shear Test attempt
R = Rock Core Sample
SSA = Solid Stem Auger
HSA = Hollow Stem Auger
RC = Roller Cone
WOH = weight of 140lb. hammer
WOR/C = weight of rods or casing
WO1P = Weight of one person
S_u = Insitu Field Vane Shear Strength (psf)
S_{ur} = Pocket Torvane Shear Strength (psf)
q_p = Unconfined Compressive Strength (ksf)
N-uncorrected = Raw field SPT N-value
Hammer Efficiency Factor = Annual Calibration Value
N_{60} = SPT N-uncorrected corrected for hammer efficiency
N_{60} = (Hammer Efficiency Factor/60%)*N-uncorrected
$S_{u(lab)}$ = Lab Vane Shear Strength (psf)
WC = water content, percent
LL = Liquid Limit
PL = Plastic Limit
PI = Plasticity Index
G = Grain Size Analysis
C = Consolidation Test

Depth (ft.)	Sample No.	Pen./Rec. (in.)	Sample Depth (ft.)	Blows (/6 in.) Strength (psf) or RQD (%)	N-uncorrected	N_{60}	Casing Blows	Elevation (ft.)	Visual Description and Remarks	Laboratory Testing Results/ AASHTO and Unified Class
0							55A	168.95	Pavement — 0.45	
	1D	24/18	1.00 - 3.00	5/5/5/5	10	14			Brown, moist, medium dense, fine to coarse SAND, some silt, trace gravel.	G#212307 A-2-4, SM WC=12.1%
5	2D	24/6	5.00 - 7.00	3/3/1/2	4	6			Brown, wet, loose, fine to coarse SAND, some silt, trace gravel.	
								161.40	8.00	
10	3D	24/21	10.00 - 12.00	6/5/4/6	9	13	38		Grey, wet, stiff, SILT, some clay, trace fine sand.	G#212308 A-4, CL-ML WC=22.1%
							39			
							36			
							35			
							28			
15	4D	24/7	15.00 - 17.00	WOH/WOH/2/5	2	3	39		Dark brown, wet, soft, SILT, little fine sand, little clay, trace organics, wood.	
							34			
							31			
							40			
20	5D	24/24	20.00 - 22.00	4/1/1/1	2	3	51		Grey, wet, soft, SILT, little fine sand, little clay.	G#212309 A-4, CL-ML WC=22.4%
							47			
							44			
							38			
							40			
25	6D	24/24	25.00 - 27.00	WOR/WOR/WOR/WOR	---		59		Grey, wet, soft, SILT, some fine sand, little clay.	G#212310 A-4, CL-ML WC=21.2% Non-plastic
							43			
							43			
							35			
30	7D	24/24	30.00 - 32.00	WOR/WOR/WOR/WOR	---		37		Grey, wet, soft, SILT, some clay, trace fine sand.	G#212311 A-4, CL-ML WC=28.3% Non-plastic
							53			
							48			
	V1		32.00 - 32.43	Sum384/41 psf			43		65x130 mm vane raw torque readings: V1: 14.0/1.5 ft-lbs	
	V2		33.00 - 33.43	Sum453/82 psf			42		V2: 16.5/3.0 ft-lbs	
							37			
35	8D MU	24/24 24/0	35.00 - 37.00 Wt=50.00 37.00	WOR/WOR/WOR/WOR Piston Sampler	---		58		Grey, wet, medium stiff, SILT, some clay, with 1/4-1/2" sand layers. Failed tube attempt.	G#212312 A-4, CL-ML WC=25.0% LL=25 PL=18 PI=7
							47			
	V3		37.00 - 37.43	Sum659/110 psf			43		65x130 mm vane raw torque readings: V3: 24.0/4.0 ft-lbs	
	MV						45		Failed 65x130 mm vane attempt.	
							33			
40	9D V5	24/24	40.00 - 42.00	WOR/WOR/WOR/WOR Sum481/110 psf	---		57		Grey, wet, soft, SILT, some clay, trace fine sand. 65x130 mm vane raw torque readings: V5: 17.0/4.0 ft-lbs	G#212313 A-4, CL-ML WC=24.7% LL=22 PL=17 PI=5
	V6		40.43 41.00 - 41.43	Sum467/55 psf			48		V6: 17.0/2.0 ft-lbs	
							42			
							40			
							31			
45	MU 10D	24/0 24/24	45.00 - 47.00 Wt=50.00 47.00	Piston Sampler WOR/WOR/WOR/WOR	---		41		Failed tube attempt. Grey, wet, medium stiff, SILT, some clay, trace fine sand.	G#212314 A-4, CL-ML WC=28.8% LL=22 PL=17 PI=5
							39			
	V7		47.00 - 47.43	Sum604/82 psf			37		65x130 mm vane raw torque readings: V7: 22.0/3.0 ft-lbs	
	V8		48.00 - 48.43	Sum618/82 psf			36		V8: 22.5/3.0 ft-lbs	
							35			
50	V9 11D	24/24	50.00 - 52.00 Wt=50.00 52.00	Sum879/55 psf WOR/WOR/WOR/WOR	---		57		65x130 mm vane raw torque readings: V9: 32.0/2.0 ft-lbs Grey, wet, loose, fine to coarse SAND, some silt, little clay, trace gravel. Failed vane attempt.	G#212315 A-2-4, SC-SM WC=17.0% Non-plastic
	MV						60			
							70			
							42			
							39			
55	1U	24/24	55.00 - 57.00	WOR/WOR	---		40		Similar to above. Two dents in side of tube by unknown cause. (The shelby tube had two large dents preventing extraction of sample for testing)	#212316 Tube Damaged
							52			
	V11		57.00 - 57.43	Sum618/82 psf			40		65x130 mm vane raw torque readings: V11: 22.25/3.0 ft-lbs	
	V12		58.00 - 58.43	Sum618/55 psf			43		V12: 22.5/2.0 ft-lbs	
							36	110.40	59.00	
60	12D V13	24/24	60.00 - 62.00 Wt=50.00 62.00	WOR/WOR/WOR/WOR Sum604/82 psf	---		55		Grey, wet, medium stiff, Clayey SILT, trace fine sand. 65x130 mm vane raw torque readings: V13: 22.0/3.0 ft-lbs	G#212317 A-4, CL WC=27.6% LL=26 PL=18 PI=8
	V14		60.43 61.00 - 61.43	Sum577/55 psf			44		V14: 21.0/2.0 ft-lbs	
							33			
							31			
							29			
65	2U	24/24	65.00 - 67.00	WOR/WOR	---		42		Grey, wet, medium stiff, Clayey SILT, trace fine sand.	G.C#212318 A-4, CL-ML WC=28.7% LL=23 PL=18 PI=5
							36			
	V15		67.00 - 67.43	Sum687/82 psf			30		65x130 mm vane raw torque readings: V15: 25.0/3.0 ft-lbs	
	V16		68.00 - 68.43	Sum742/110 psf			30		V16: 27.0/4.0 ft-lbs	
							22			
70	V17 13D	24/0	70.00 - 70.43 Wt=50.00 70.43	Sum659/82 psf WOR/WOR/WOR/WOR	---		32		65x130 mm vane raw torque readings: V17: 24.0/3.0 ft-lbs Failed sample attempt.	
	V18		72.00 - 73.00 71.00 - 71.43	Sum659/69 psf			38		V18: 24.0/2.5 ft-lbs	
							32			
							29			
							26			

Remarks:

Stratification lines represent approximate boundaries between soil types; transitions may be gradual.

* Water level readings have been made at times and under conditions stated. Groundwater fluctuations may occur due to conditions other than those present at the time measurements were made.

Page 1 of 2 — Boring No.: BB-MJS-102

Maine Department of Transportation — Soil/Rock Exploration Log — US CUSTOMARY UNITS

Project: Jock Stream Bridge #2412 carrying Cobbosseecontee Road over Jock
Location: Monmouth, Maine

Boring No.: BB-MJS-102
PIN: 16716.00

Driller:	MaineDOT	Elevation (ft.)	169.4	Auger ID/OD:	5" Solid Stem
Operator:	E. Giguere, C. Giles	Datum:	NAVD 88	Sampler:	Standard Split Spoon
Logged By:	B. Wilder	Rig Type:	CME 45C	Hammer Wt./Fall:	140#/30"
Date Start/Finish:	7/11,14/09	Drilling Method:	Cased Wash Boring	Core Barrel:	NQ-2"
Boring Location:	14+32.3, 5.8 Lt.	Casing ID/OD:	HW	Water Level*:	5.5' bgs.
Hammer Efficiency Factor: 0.84		Hammer Type:	Automatic ☒ Hydraulic ☐ Rope & Cathead ☐		

Definitions:
D = Split Spoon Sample
MD = Unsuccessful Split Spoon Sample attempt
U = Thin Wall Tube Sample
MU = Unsuccessful Thin Wall Tube Sample attempt
V = Insitu Vane Shear Test, PP = Pocket Penetrometer
MV = Unsuccessful Insitu Vane Shear Test attempt
R = Rock Core Sample
SSA = Solid Stem Auger
HSA = Hollow Stem Auger
RC = Roller Cone
WOH = weight of 140lb. hammer
WOR/C = weight of rods or casing
WO1P = Weight of one person
S_u = Insitu Field Vane Shear Strength (psf)
S_{ur} = Pocket Torvane Shear Strength (psf)
q_p = Unconfined Compressive Strength (ksf)
N-uncorrected = Raw field SPT N-value
Hammer Efficiency Factor = Annual Calibration Value
N_{60} = SPT N-uncorrected corrected for hammer efficiency
N_{60} = (Hammer Efficiency Factor/60%)*N-uncorrected
$S_{u(lab)}$ = Lab Vane Shear Strength (psf)
WC = water content, percent
LL = Liquid Limit
PL = Plastic Limit
PI = Plasticity Index
G = Grain Size Analysis
C = Consolidation Test

Depth (ft.)	Sample No.	Pen./Rec. (in.)	Sample Depth (ft.)	Blows (/6 in.) Strength (psf) or RQD (%)	N-uncorrected	N_{60}	Casing Blows	Elevation (ft.)	Visual Description and Remarks	Laboratory Testing Results/ AASHTO and Unified Class
75	3U	24/24	75.00 - 77.00	WOR/WOR	---		42		Grey, wet, medium stiff, Clayey SILT, trace fine sand.	G.C#212319 A-6, CL WC=30.4% LL=28 PL=15 PI=10
							45			
	V19		77.00 - 77.43	Sum796/82 psf			42		65x130 mm vane raw torque readings: V19: 29.0/3.0 ft-lbs	
	V20		78.00 - 78.43	Sum851/165 psf			39		V20: 31.0/6.0 ft-lbs	
							42			
80	V21 13D	24/24	80.00 - 80.43 Wt=50.00 80.43	Sum824/82 psf WOR/WOR/WOR/WOR	---		56		65x130 mm vane raw torque readings: V21: 30.0/3.0 ft-lbs Grey, wet, medium stiff, Clayey SILT, trace fine sand.	G#212320 A-6, CL WC=28.1% LL=30 PL=20 PI=10
	V22		82.00 - 81.00 - 81.43	Sum824/110 psf			53		V22: 30.0/4.0 ft-lbs	
							47			
							46	85.90	83.50	
85							47		Dark gray, wet, medium stiff, Silty CLAY, trace fine sand. Washed ahead to 87.0' bgs, then took vanes.	G#212321 A-6, CL WC=26.4% LL=36 PL=21 PI=15
	MU 14D	24/0 24/24	85.00 - 87.00 Wt=50.00 87.00	WOR/WOR WOR/WOR/WOR/WOR	---		OPEN HOLE			
	V23		87.00 - 87.43	Sum989/110 psf					65x130 mm vane raw torque readings: V23: 36.0/4.0 ft-lbs	
	V24		88.00 - 88.43	Sum961/110 psf			RC		V24: 35.0/4.0 ft-lbs Roller Coned ahead to 90.0' bgs.	
90	MV 15D	24/24	90.00 - 92.00	WOR/WOR/WOR/WOR	---				Failed 65x130 mm vane attempt. Grey, wet, medium stiff, SILT, some clay, trace fine sand in 1/2-2" layers.	G#212322 A-6, CL WC=26.1% LL=30 PL=19 PI=11
								75.90	93.50	
95	16D	24/20	95.00 - 97.00	WOR/WOR/3/8	3	4			Grey, wet, loose, fine to medium SAND, some silt, trace clay.	G#212323 A-4, SC-SM WC=21.2%
								72.40	97.00	
100									Bottom of Exploration at 97.00 feet below ground surface. NO REFUSAL	

Remarks:

Stratification lines represent approximate boundaries between soil types; transitions may be gradual.

* Water level readings have been made at times and under conditions stated. Groundwater fluctuations may occur due to conditions other than those present at the time measurements were made.

Page 2 of 2 — Boring No.: BB-MJS-102

STATE OF MAINE
DEPARTMENT OF TRANSPORTATION

BR-1671(600)X

PIN 16716.00

BRIDGE PLANS

BRIDGE NO. 2412

	BY	DATE
PROJ. MANAGER		
DESIGN-DETAILED	K. MAGUIRE	OCT 2009
CHECKED-REVIEWED		
DESIGN2-DETAILED2		
DESIGN3-DETAILED3		
REVISIONS 1		
REVISIONS 2		
REVISIONS 3		
REVISIONS 4		
FIELD CHANGES		

SIGNATURE

P.E. NUMBER

DATE

JOCK STREAM BRIDGE
JOCK STREAM
MONMOUTH KENNEBEC COUNTY

BORING LOGS

SHEET NUMBER
6
OF 18

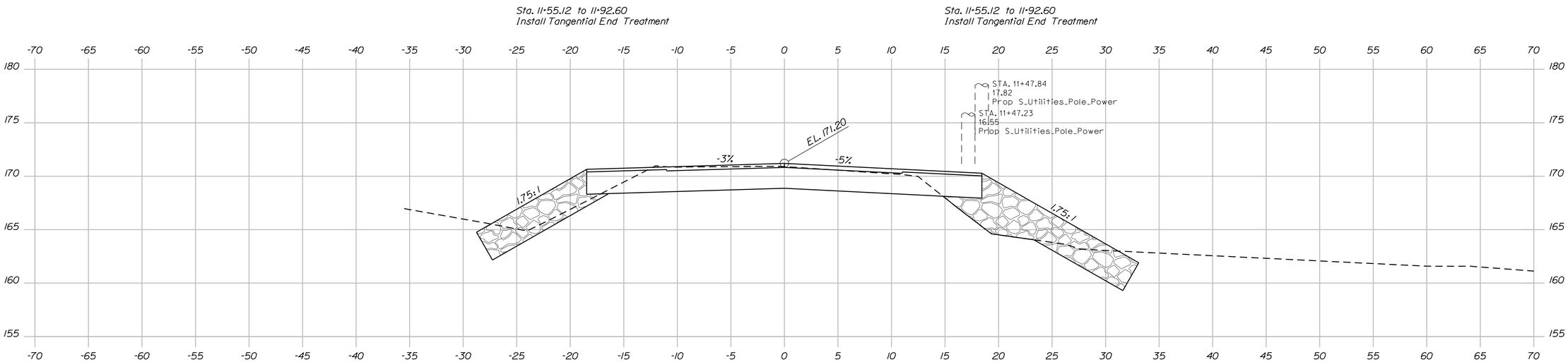

11+50.00
End Transition
Begin Project

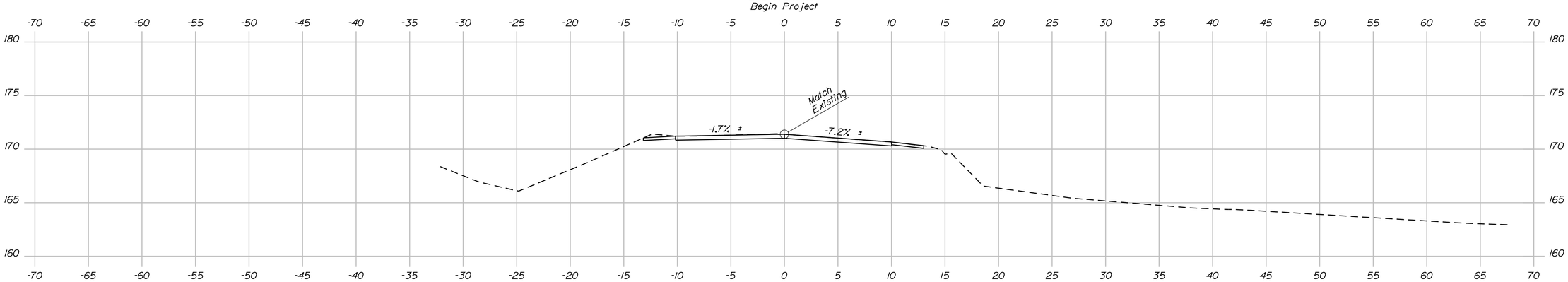

11+00.00
Match Existing Section; Begin Transition

DETAIL "A"

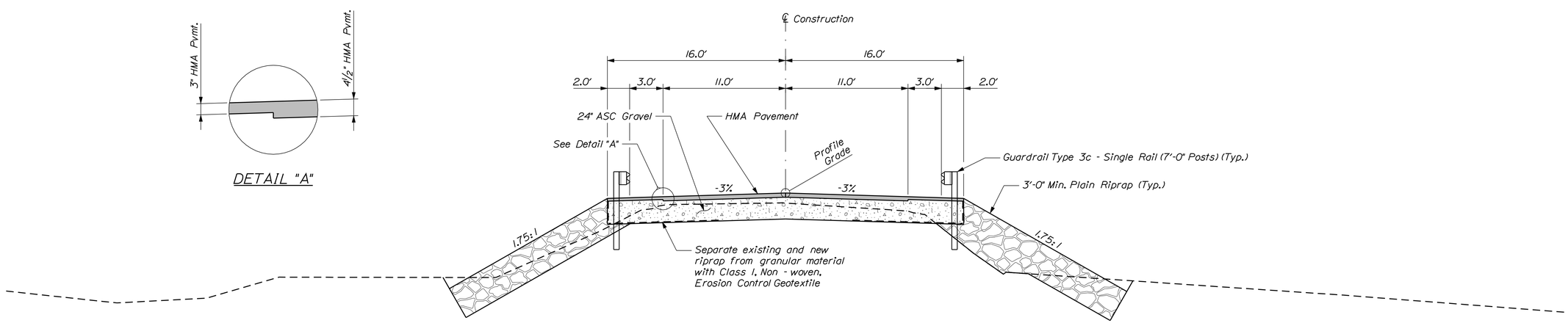

APPROACH DESIGN SECTION

STATE OF MAINE
DEPARTMENT OF TRANSPORTATION

BR-1671(600)X

PIN 16716.00

BRIDGE NO. 2412

BRIDGE PLANS

		BY	DATE
PROJ. MANAGER	K. Cummings		
DESIGN-DETAILED	R. Noous	Team South	Aug. 2010
CHECKED-REVIEWED	G. Gustafson	-----	-----
DESIGN2-DETAILED2	-----	-----	-----
DESIGN3-DETAILED3	-----	-----	-----
REVISIONS 1	-----	-----	-----
REVISIONS 2	-----	-----	-----
REVISIONS 3	-----	-----	-----
REVISIONS 4	-----	-----	-----
FIELD CHANGES	-----	-----	-----

SIGNATURE

P.E. NUMBER

DATE

JOCK STREAM BRIDGE
JOCK STREAM
MONMOUTH KENNEBEC COUNTY

CROSS SECTIONS

SHEET NUMBER
7
OF 18

Sta. 10+50.00 to Sta. 11+50.00

Filename: ...\msta\007_XSECT_10+50_001.dgn Division: BRIDGE Username: alan.nadeau Date:8/30/2010

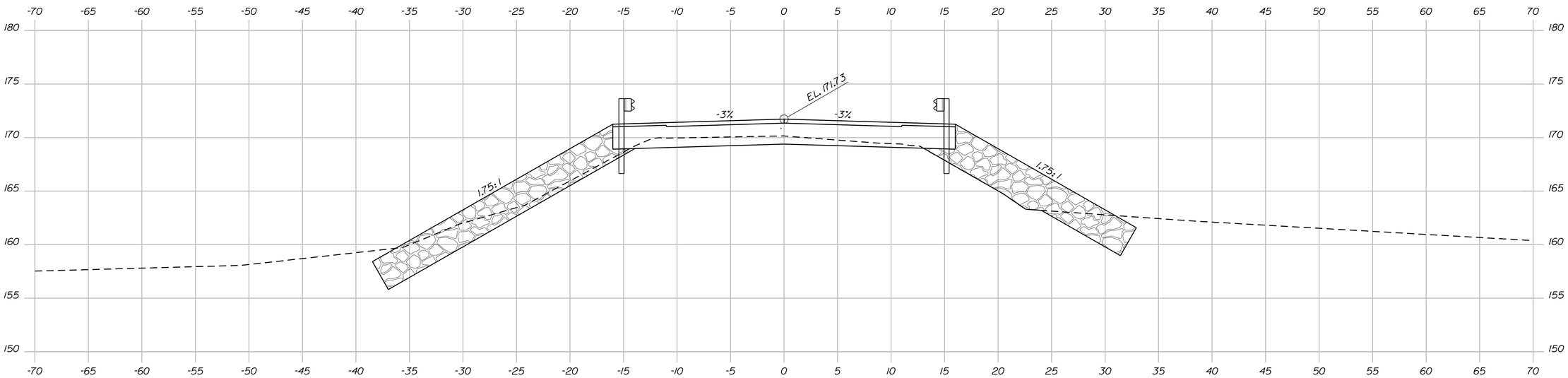

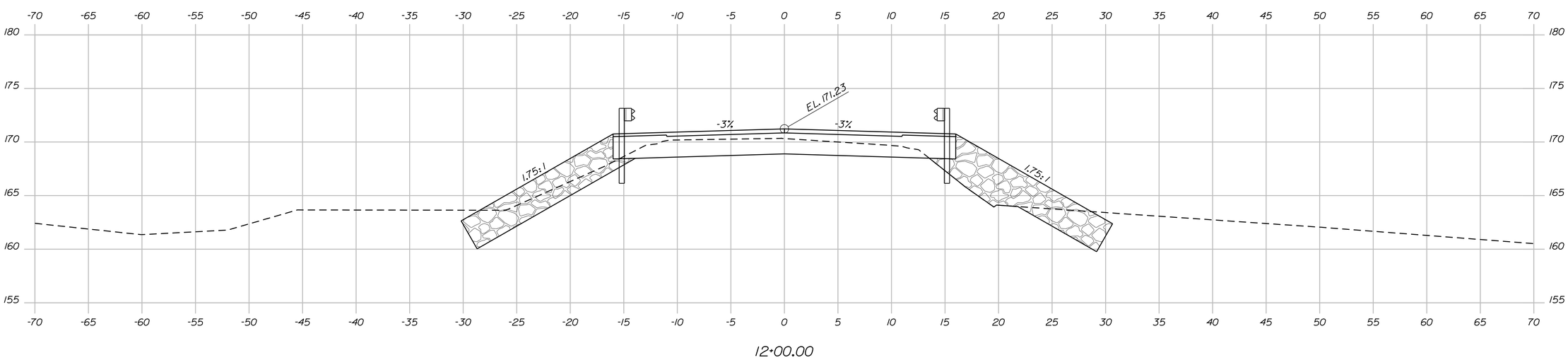

STATE OF MAINE
DEPARTMENT OF TRANSPORTATION

BR-1671(600)X

PIN 16716.00

BRIDGE NO. 2412

BRIDGE PLANS

		BY	DATE
PROJ. MANAGER	K. Cummings		
DESIGN-DETAILED	R. Naous	Team South	Aug. 2010
CHECKED-REVIEWED	G. Gustafson		
DESIGN2-DETAILED2			
DESIGN3-DETAILED3			
REVISIONS 1			
REVISIONS 2			
REVISIONS 3			
REVISIONS 4			
FIELD CHANGES			

SIGNATURE

P.E. NUMBER

DATE

JOCK STREAM BRIDGE
JOCK STREAM
MONMOUTH KENNEBEC COUNTY

CROSS SECTIONS

SHEET NUMBER

8

OF 18

Sta. 12+00.00 to Sta. 12+50.00

Filename: ...\msta\008_XSECT_12+00_002.dgn Division: BRIDGE Username: alan.nadeau Date:8/30/2010

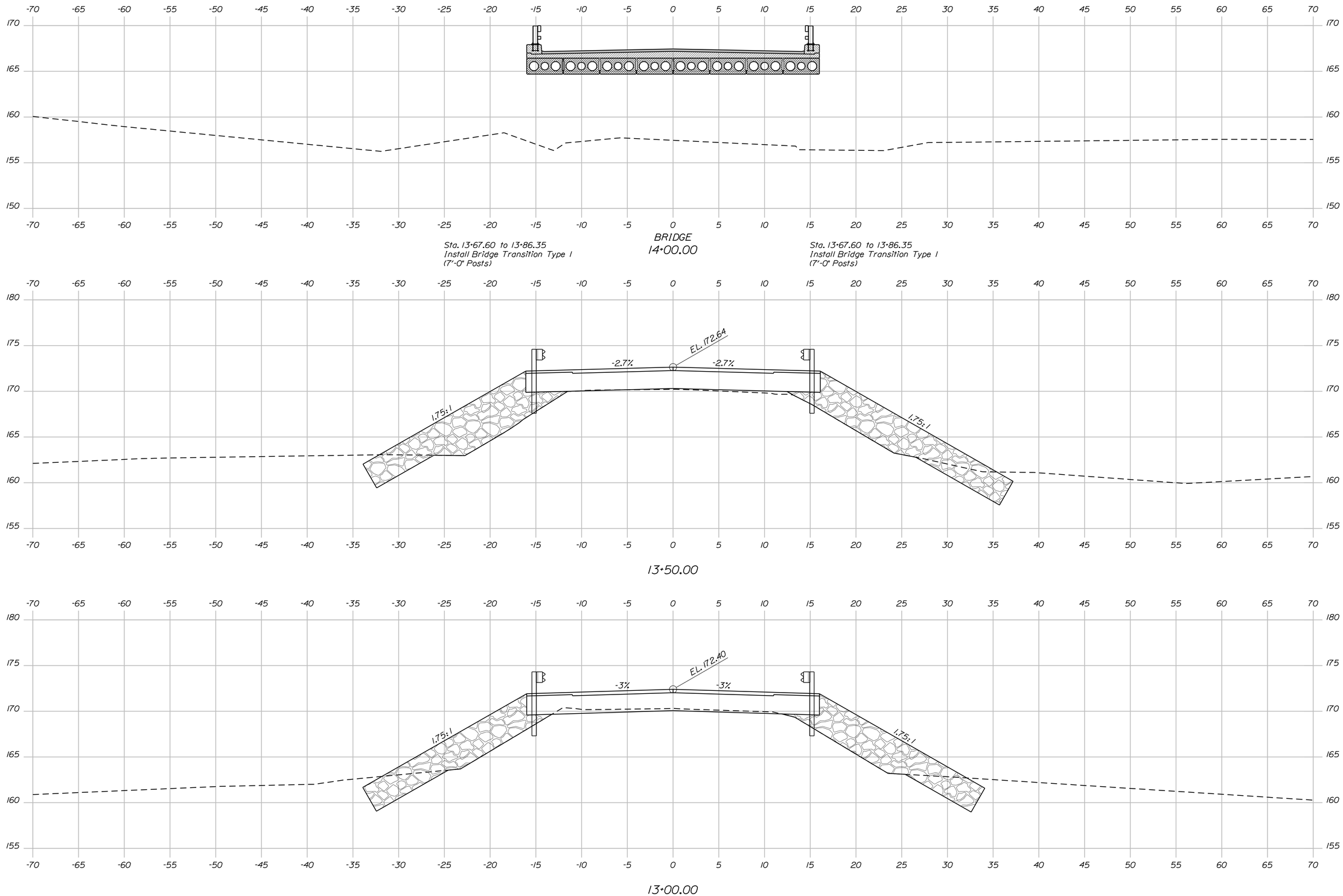

STATE OF MAINE
DEPARTMENT OF TRANSPORTATION

BR-1671(600)X

PIN 16716.00

BRIDGE NO. 2412

BRIDGE PLANS

		BY	DATE
PROJ. MANAGER	K. Cummings		
DESIGN-DETAILED	R. Naous	Team South	Aug. 2010
CHECKED-REVIEWED	G. Gustafson		
DESIGN2-DETAILED2			
DESIGN3-DETAILED3			
REVISIONS 1			
REVISIONS 2			
REVISIONS 3			
REVISIONS 4			
FIELD CHANGES			

SIGNATURE

P.E. NUMBER

DATE

JOCK STREAM BRIDGE
JOCK STREAM
MONMOUTH KENNEBEC COUNTY

CROSS SECTIONS

SHEET NUMBER

9

OF 18

Sta. 13+00.00 to Sta. 14+00.00

Filename: ...\msta\009_XSECT_13+00_003.dgn Division: BRIDGE Username: alan.nadeau Date:8/30/2010

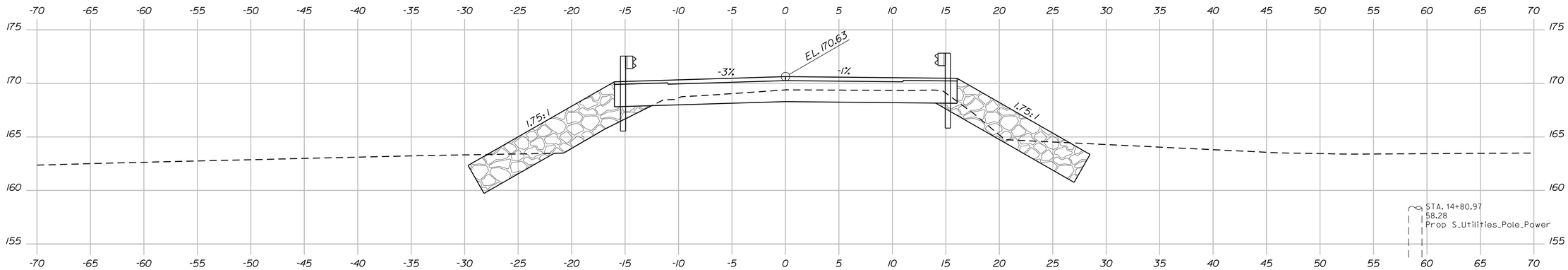

15+50.00

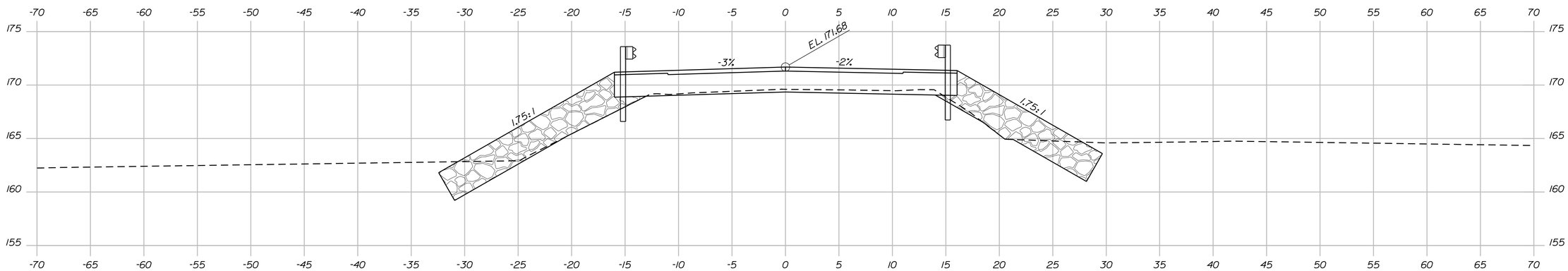

Sta. 14+64.40 to 16+15.82
Install 125 L.F. GR Type 3c
(7'-0" Posts)

15+00.00

Sta. 14+64.40 to 16+12.99
Install 125 L.F. GR Type 3c
(7'-0" Posts)

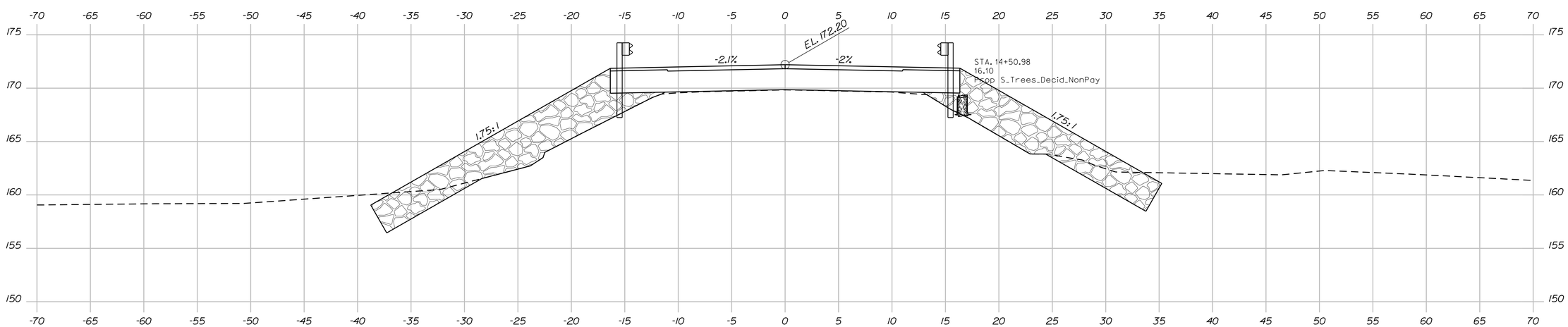

Sta. 14+45.65 to 14+64.40
Install Bridge Transition Type I
(7'-0" Posts)

14+50.00

Sta. 14+45.65 to 14+64.40
Install Bridge Transition Type I
(7'-0" Posts)

STATE OF MAINE
DEPARTMENT OF TRANSPORTATION

BR-1671(600)X

PIN 16716.00

BRIDGE NO. 2412

BRIDGE PLANS

		BY	DATE
PROJ. MANAGER	K. Cummings		
DESIGN-DETAILED	R. Noous	Team South	Aug. 2010
CHECKED-REVIEWED	G. Gustafson	-----	-----
DESIGN2-DETAILED2	-----	-----	-----
DESIGN3-DETAILED3	-----	-----	-----
REVISIONS 1	-----	-----	-----
REVISIONS 2	-----	-----	-----
REVISIONS 3	-----	-----	-----
REVISIONS 4	-----	-----	-----
FIELD CHANGES	-----	-----	-----

SIGNATURE

P.E. NUMBER

DATE

JOCK STREAM BRIDGE
JOCK STREAM
MONMOUTH KENNEBEC COUNTY

CROSS SECTIONS

SHEET NUMBER

10

OF 18

Sta. 14+50.00 to Sta. 15+50.00

Filename: ...\msta\010_XSECT_14+50_004.dgn Division: BRIDGE Username: alan.nadeau Date:8/30/2010

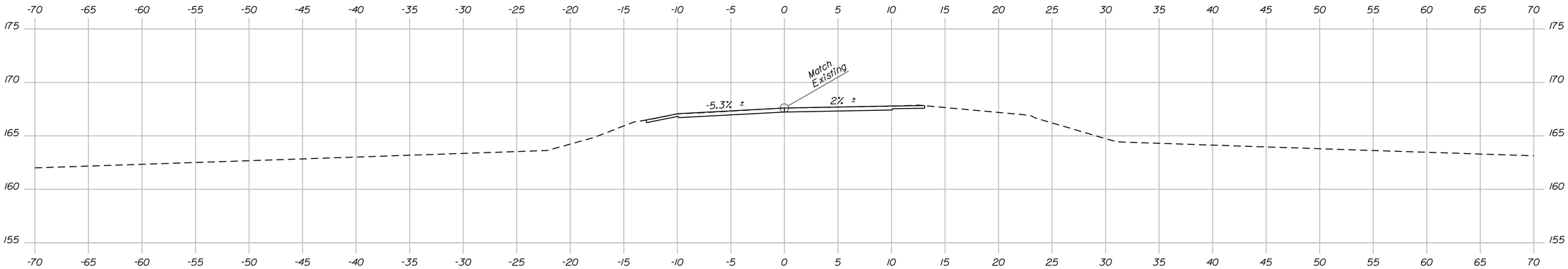

17+00.00
End Transition
Match Existing Section

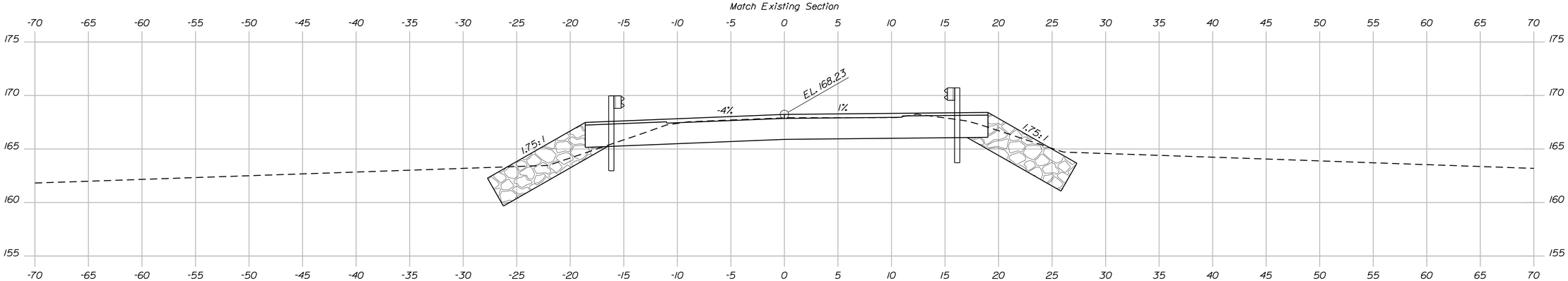

Sta. 16+15.82 to 16+53.68
Install Tangential End Treatment

16+50.00
End Project
Begin Transition

Sta. 16+12.99 to 16+50.12
Install Tangential End Treatment

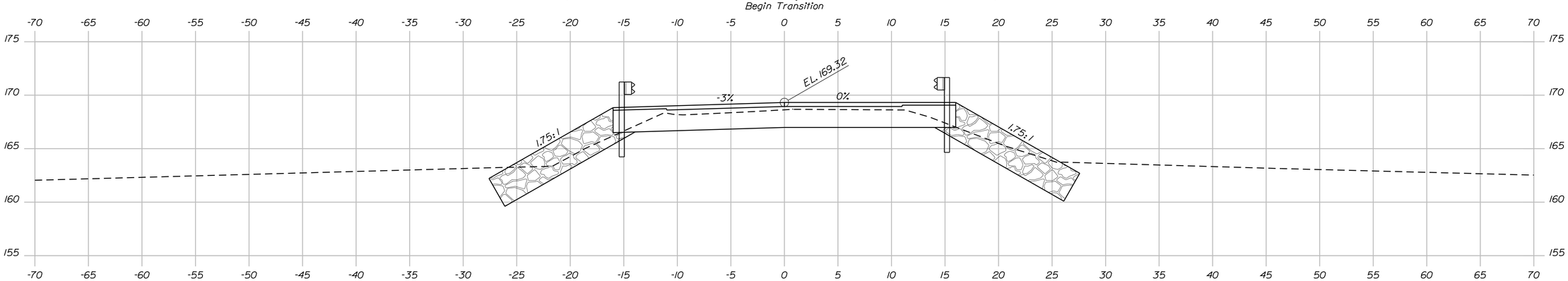

16+00.00

Filename: ...\msta\011_XSECT_16+00_005.dgn Division: BRIDGE Username: alan.nadeau Date:8/30/2010

STATE OF MAINE
DEPARTMENT OF TRANSPORTATION

BR-1671(600)X

PIN 16716.00

BRIDGE NO. 2412

BRIDGE PLANS

		BY	DATE
PROJ. MANAGER	K. Cummings		
DESIGN-DETAILED	R. Noons	Team South	Aug. 2010
CHECKED-REVIEWED	C. Gustafson		
DESIGN2-DETAILED2			
DESIGN3-DETAILED3			
REVISIONS 1			
REVISIONS 2			
REVISIONS 3			
REVISIONS 4			
FIELD CHANGES			

SIGNATURE

P.E. NUMBER

DATE

JOCK STREAM BRIDGE
JOCK STREAM
MONMOUTH KENNEBEC COUNTY

CROSS SECTIONS

SHEET NUMBER

11

OF 18

Sta. 16+00.00 to Sta. 17+00.00

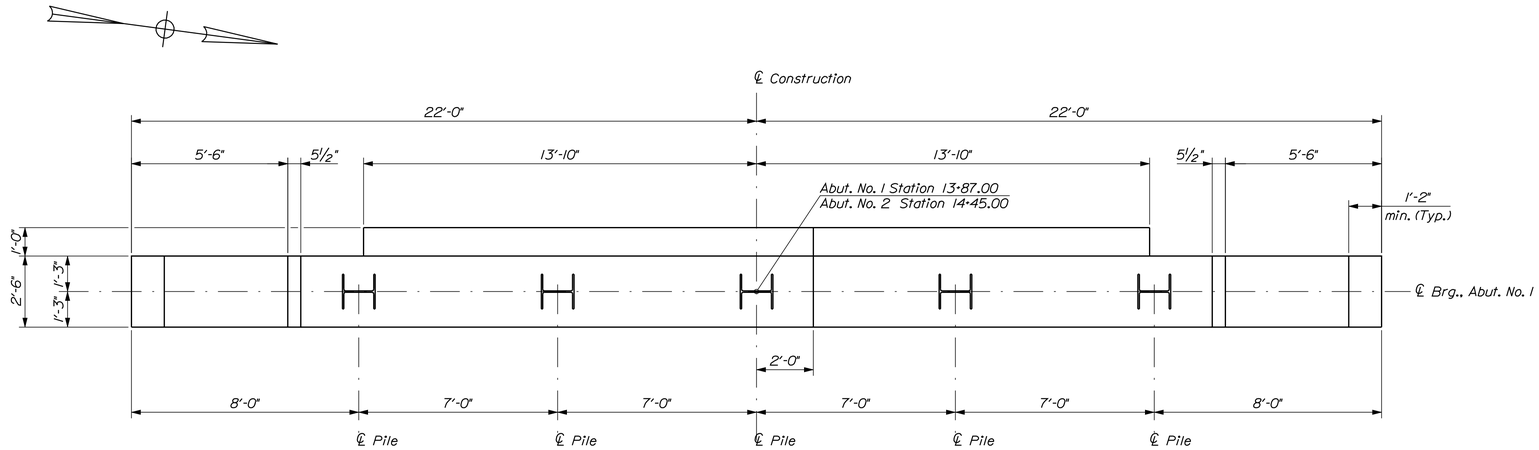

PLAN ~ ABUTMENT NO. 1

(Abutment No. 2 Similar)

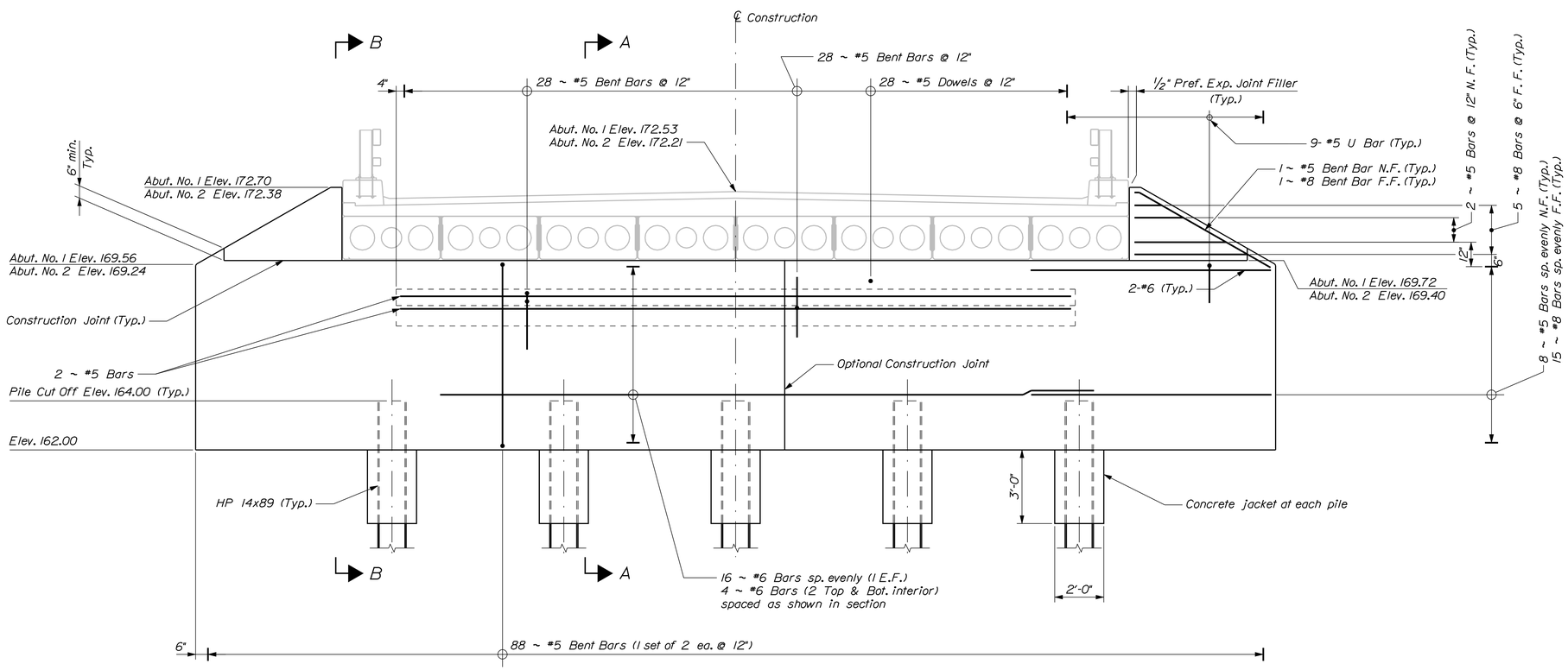

ELEVATION ~ ABUTMENT NO. 1

(Abutment No. 2 Similar)

STATE OF MAINE
DEPARTMENT OF TRANSPORTATION

BR-1671(600)X

PIN 16716.00

BRIDGE NO. 2412

BRIDGE PLANS

		BY	DATE
PROJ. MANAGER	K. Cummings		
DESIGN-DETAILED	R. Noous	Team South	Aug. 2010
CHECKED-REVIEWED	G. Gustafson	-----	-----
DESIGN2-DETAILED2	-----	-----	-----
DESIGN3-DETAILED3	-----	-----	-----
REVISIONS 1	-----	-----	-----
REVISIONS 2	-----	-----	-----
REVISIONS 3	-----	-----	-----
REVISIONS 4	-----	-----	-----
FIELD CHANGES	-----	-----	-----

SIGNATURE

P.E. NUMBER

DATE

JOCK STREAM BRIDGE
JOCK STREAM
MONMOUTH KENNEBEC COUNTY

ABUTMENT NO. 1 & 2

SHEET NUMBER

12

OF 18

Filename: ...\msta\012_Abutment_Integral.dgn Division: BRIDGE Username: dana.damren Date:8/31/2010

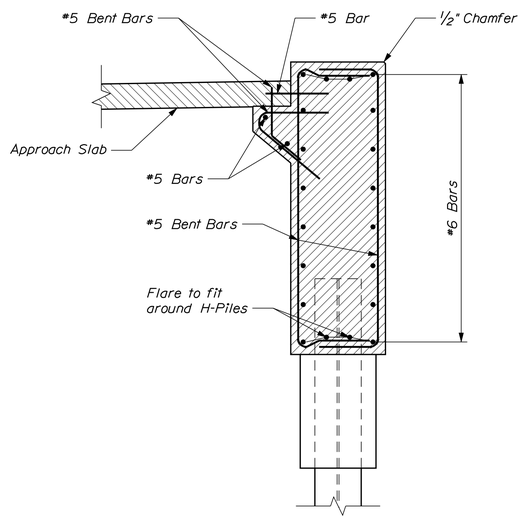

SECTION A-A

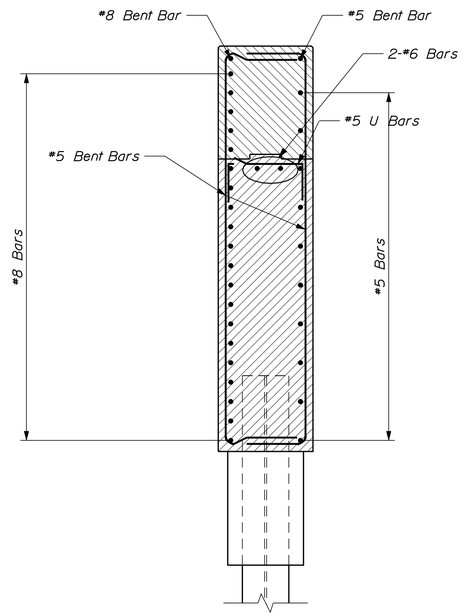

SECTION B-B

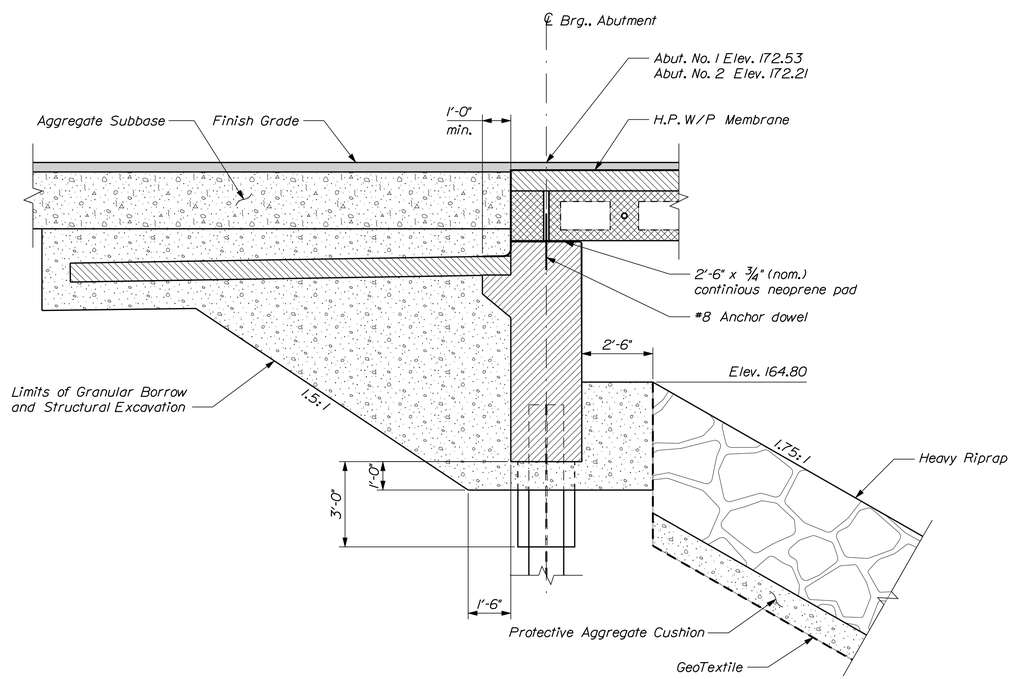

TYPICAL ABUTMENT SECTION @ ℄ CONSTRUCTION

PILE NOTES

1. The maximum factored pile load is 425 kips. (including 101 kips allowed for downdrag)

2. H-pile material shall be ASTM A 709, Grade 50W.

3. Piles shall not be out of position shown by more than 2 inches in any direction.

4. Estimate of piles required including embedment in Abutments:
   5 ~ HP 14x89 @ 127 feet
   Abutment No. 1: 5 ~ HP 14x89 @ 127 feet
   Abutment No. 2:

5. The Contractor shall make provisions in ordered pile lengths to account for additional length needed to accomodate the leads and an additional 4 feet needed for those piles undergoing dynamic testing.

6. All piles shall be equipped with a pile tip in accordance with Standard Specifications Section 501.10, Prefabricated Pile Tips.

7. The Contractor shall perform and submit a wave equation analysis for review and acceptance by the Resident. The maximum allowable driving stress is 0.90 times Fy. The submittal analyses shall include the proposed stopping criteria based on the wave equation analysis and the proposed driving system. The stopping criteria shall include the blows per inch and the number of 1-in. intervals at which pile installation may be terminated. The cost of performing the wave equation analysis will be considered incidental to Item No. 501.92, Pile Driving Equipment Mobilization.

8. The Contractor shall perform 2 dynamic load test(s) to confirm the ultimate capacity of the piles, and verify or revise the proposed driving/stopping criteria. The required nominal resistance for the pile is the factored axial pile load divided by a resistance factor of 0.65 per LRFD Specifications. The dynamic test shall be performed on the first production pile driven, and the remainder of the production piles driven with the driving/stopping criteria indicated by the dynamic load test.

9. The Contractor shall provide a pile driving system which is capable of completing the required dynamic testing and production pile driving, without overstressing the piles, where the maximum driving stress is 0.90 times the yield strength of the pile.

10. The driving system shall be operating at efficiency equal to or greater than that used in the wave equation submittal. If the driving system is not operating at the required efficiency, as indicated by the Contractor's wave equation analyses, the Departments wave equation analysis and/or dynamic load test results, the Contractor shall correct or replace the driving system components as required to provide an acceptable driving system, as approved by the Department. Correcting or replacing driving system components resulting from driving system inefficiency, including additional wave equation analyses and/or dynamic load tests, shall be at no additional cost to the Department.

11. H-piles shall be driven to at least the minimum required penetration elevations shown in the table below, and to the required penetration resitance as determined by wave equation analysis, dynamic load testing, restrikes, and signal matching analysis. For estimating purposes, it is anticipated that the piles will penetrate approximately 20 feet into the glacial till. However, the till material is variable and the actual penetration may exceed 20 feet at some locations. The estimated typical tip penetrations do not include the allowance for an additional 10 feet of pile required for those piles that undergo dynamic and restrike testing.

Structure	Sta	Minimum Required Tip Penetration Elevation (ft)	Estimated Typical Tip Penetration Elevation (ft)
Abut 1	13+87.00'	53	23
Abut 2	14+45.00'	48	18

12. The Contractor shall perform one (1) dynamic test and one (1) restrike load test after 24 hours at each abutment to confirm the nominal resistance of the pile. The required nominal resistance of the piles is the maximum factored axial load divided by a resistance factor of 0.52 per LRFD Specifications. Each dynamic load test and restrike will be performed on the first production pile driven at each abutment location in accordance with Standard Specification 501.

ABUTMENT NOTES

1. Structural Earth Excavation, Abutments and Retaining Walls, required more than 12 inches below the bottom of the structure, will be paid for in accordance with Standard Specifications Section 206, Structural Excavation.

2. Reinforcing steel shall have a minimum concrete cover of 3.0 inches.

3. Cover joints where waterstops are not required in accordance with Standard Details Section 502.

4. Abutments and wingwalls shall be backfilled with Granular Borrow. Pay limits will be the structural excavation limits in cut areas and a vertical plane located 10 feet behind the walls in fill areas.

5. The tension development length for the #8 bars in the Far Face (FF) of the wing wall Section(B-B) is to be at least 2'- 6"past the centerline of the exterior piles.

STATE OF MAINE
DEPARTMENT OF TRANSPORTATION

BR-1671(600)X

PIN 16716.00

BRIDGE NO. 2412

BRIDGE PLANS

			DATE
PROJ. MANAGER	K. Cummings	BY	
DESIGN-DETAILED	R. Nasus	Team South	Aug. 2010
CHECKED-REVIEWED	G. Gustafson		
DESIGN2-DETAILED2			
DESIGN3-DETAILED3			
REVISIONS 1			
REVISIONS 2			
REVISIONS 3			
REVISIONS 4			
FIELD CHANGES			

SIGNATURE

P.E. NUMBER

DATE

JOCK STREAM BRIDGE
JOCK STREAM
MONMOUTH KENNEBEC COUNTY

ABUTMENT DETAILS

SHEET NUMBER
13
OF 18

Filename: ...\msta\013_Abutment_Details.dgn Division: BRIDGE Username: dana.damren Date:8/31/2010

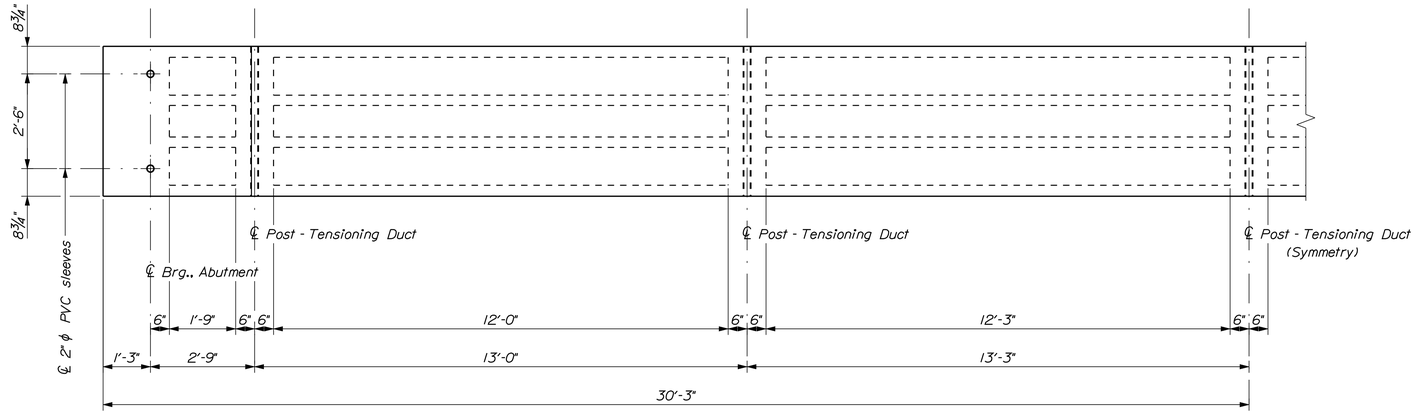

HALF VOIDED SLAB PLAN

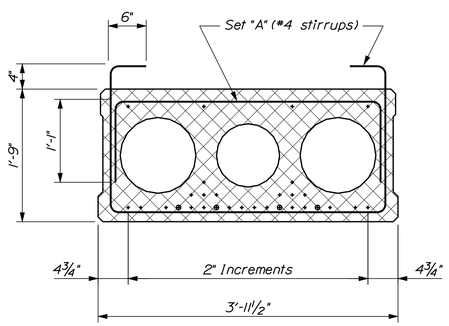

TYPICAL VOIDED SLAB SECTION
S48-21
* Strands debonded 4'-0" at each end

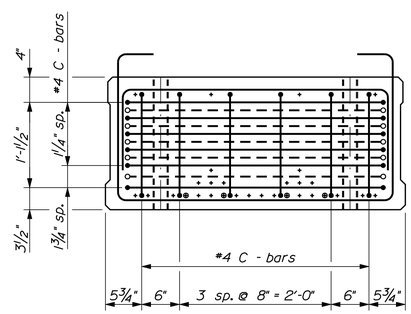

END BLOCK DETAIL

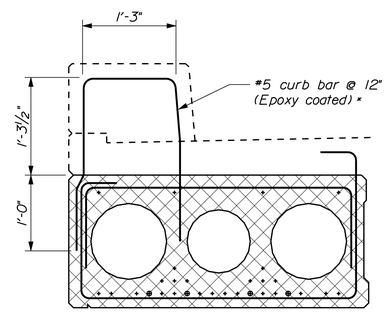

EXTERIOR VOIDED SLAB SECTION

* Provide 3 additional epoxy coated curb bars at each rail post location and at each Transition Barrier.

PRECAST CONCRETE SUPERSTRUCTURE NOTES

1. Prestressing strands shall be 0.6-in. diameter. The tensioning force is 44 kips per prestressing strand.

2. Reinforcing steel shall have a minimum concrete cover of 2 inches unless otherwise noted.

3. Install a 1-in. diameter nonmetallic void drain in the bottom of each void at both ends.

4. The top surface of the upper flange of the prestressed beams shall be raked to a surface roughness of ±¼ inch.

5. The drilling of holes in the prestressed beams and the use of power actuated tools on the beams will not be permitted.

6. Neoprene pads shall be either polychloroprene or natural polyisoprene of 50±5 Shore A durometer hardness, and shall conform to the requirements of Division 2, Section 18.2 of AASHTO Standard Specifications for Highway Bridges. Neoprene pads will not be paid for directly but will be considered incidental to related contract items.

7. Post tensioning shall be covered by a seamless polypropylene sheath, with corrosion inhibiting grease between the strands and sheath, for the full length of the strand except at the anchorage location.

8. The Contractor shall calibrate the jacking equipment as necessary to provide an anchorage of 38 to 41 kips after setting losses in each 0.6-in. diameter post tensioning strand.

9. Screed rails shall be installed to the elevation shown on the profile, adjusted for wearing course thickness and cross slope.

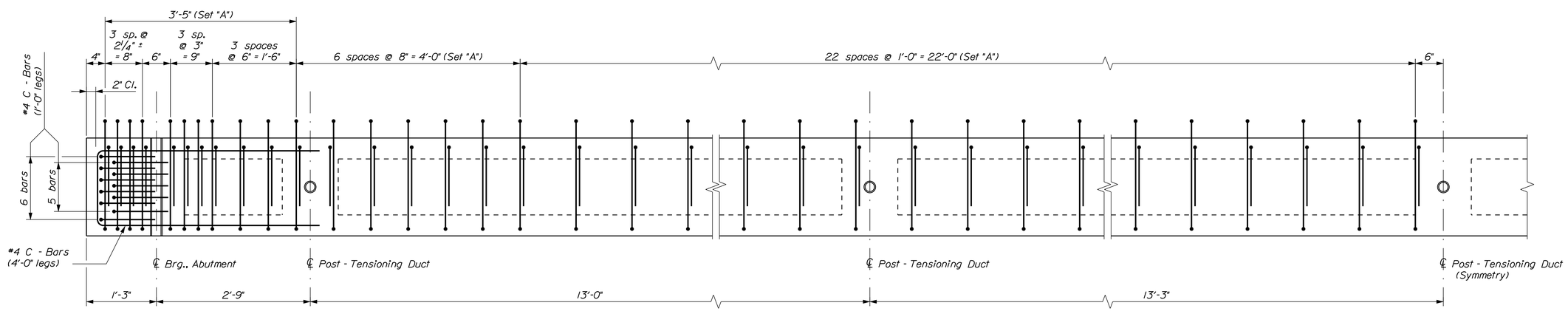

HALF VOIDED SLAB REINFORCING ELEVATION

STATE OF MAINE
DEPARTMENT OF TRANSPORTATION

BR-1671(600)X

PIN 16716.00

BRIDGE NO. 2412

BRIDGE PLANS

PROJ. MANAGER	K. Cummings	BY	DATE
DESIGN-DETAILED	R. Naous	Team South	Aug. 2010
CHECKED-REVIEWED	C. Gustafson		
DESIGN2-DETAILED2			
DESIGN3-DETAILED3			
REVISIONS 1			
REVISIONS 2			
REVISIONS 3			
REVISIONS 4			
FIELD CHANGES			

SIGNATURE

P.E. NUMBER

DATE

JOCK STREAM BRIDGE
JOCK STREAM
MONMOUTH KENNEBEC COUNTY

PRECAST VOIDED SLABS

SHEET NUMBER
14
OF 18

Filename: ...\014_Precast_Voided Slabs.dgn Division: BRIDGE Username: alan.nadeau Date:8/30/2010

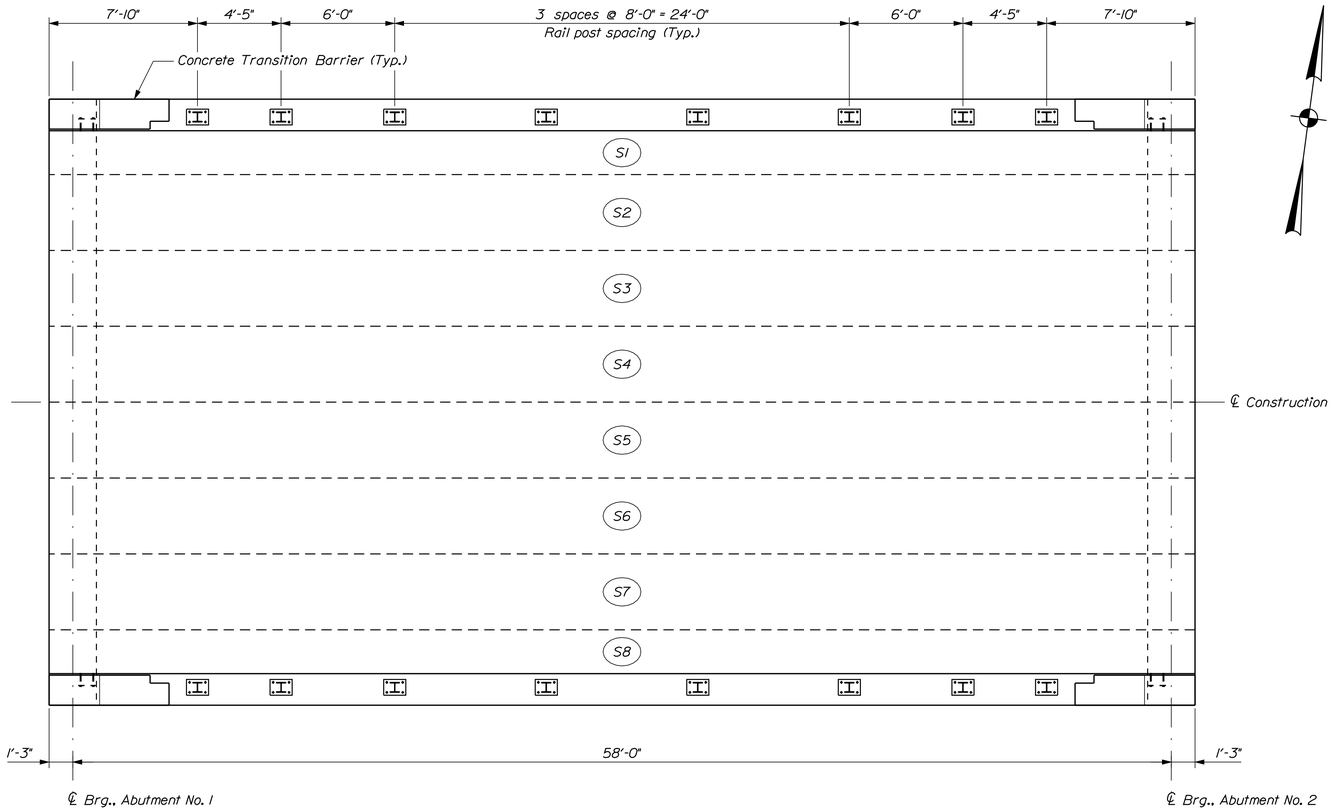

SUPERSTRUCTURE PLAN

SUPERSTRUCTURE NOTES

1. Reinforcing steel shall have a minimum concrete cover of 2 inches unless otherwise noted.

2. Form a one inch V-groove on the fascias at the horizontal joint between the curb and slab.

3. The superstructure slab concrete shall be placed in one continuous operation and the concrete shall be kept plastic until the entire placement is completed.

4. The Contractor shall install Transition Barrier vertical closed stirrups, as shown in Standard Details Section 526, prior to the placement of the curb concrete.

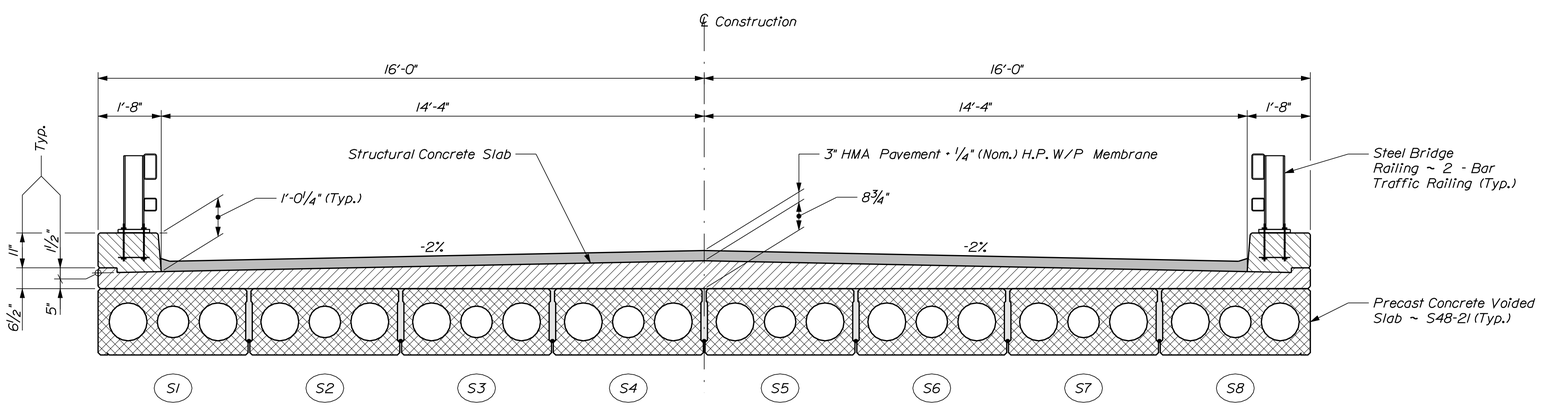

TRANSVERSE SECTION

STATE OF MAINE
DEPARTMENT OF TRANSPORTATION

BR-1671(600)X

PIN 16716.00

BRIDGE NO. 2412

BRIDGE PLANS

PROJ. MANAGER	K. Cummings	BY	DATE	
DESIGN-DETAILED	R. Noous	Team South	Aug. 2010	
CHECKED-REVIEWED	G. Gustafson	-----	-----	SIGNATURE
DESIGN2-DETAILED2	-----	-----	-----	
DESIGN3-DETAILED3	-----	-----	-----	P.E. NUMBER
REVISIONS 1	-----	-----	-----	
REVISIONS 2	-----	-----	-----	DATE
REVISIONS 3	-----	-----	-----	
REVISIONS 4	-----	-----	-----	
FIELD CHANGES	-----	-----	-----	

JOCK STREAM BRIDGE
JOCK STREAM
MONMOUTH KENNEBEC COUNTY

SUPERSTRUCTURE

SHEET NUMBER
15
OF 18

Filename: ...\msta\015_Superstructure.dgn Division: BRIDGE Username: alan.nadeau Date:8/30/2010

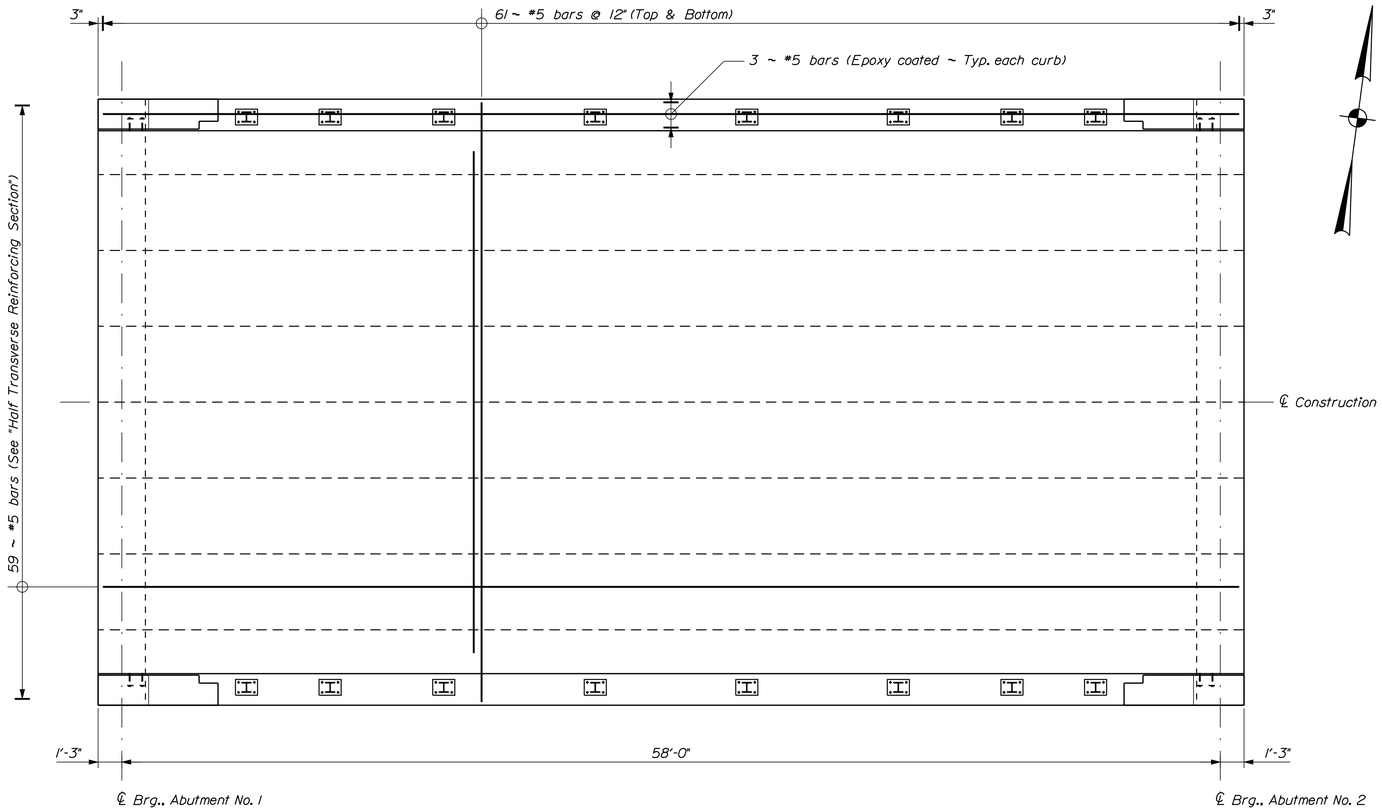

SUPERSTRUCTURE REINFORCING PLAN

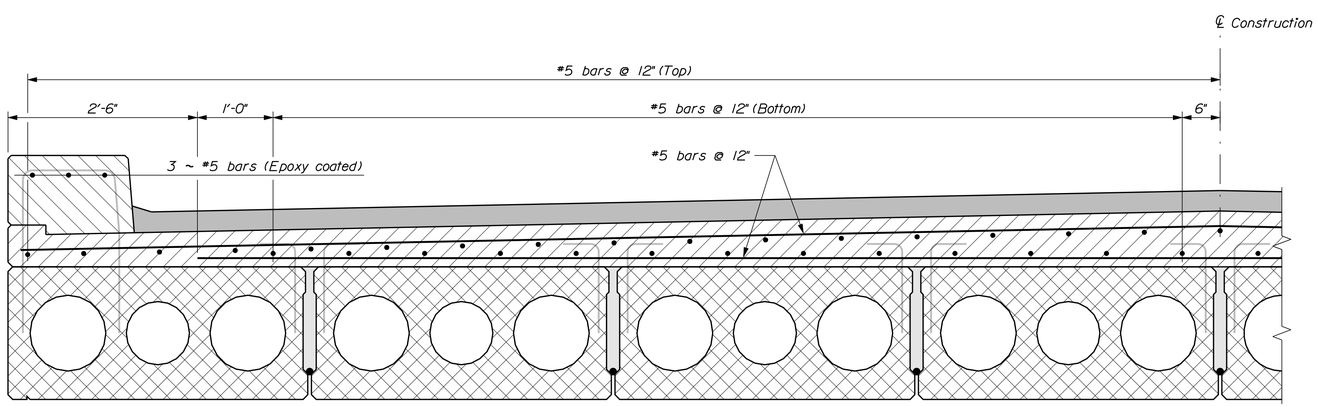

HALF TRANSVERSE REINFORCING SECTION

Filename: ...\016_Superstructure_Reinforcing.dgn Division: BRIDGE Username: alan.nadeau Date:8/30/2010

STATE OF MAINE
DEPARTMENT OF TRANSPORTATION

BR-1671(600)X

PIN 16716.00

BRIDGE NO. 2412

BRIDGE PLANS

PROJ. MANAGER	K. Cummings	BY	DATE	
DESIGN-DETAILED	R. Noous	Team South	Aug. 2010	
CHECKED-REVIEWED	G. Gustafson	------	------	SIGNATURE
DESIGN2-DETAILED2	------	------	------	
DESIGN3-DETAILED3	------	------	------	P.E. NUMBER
REVISIONS 1	------	------	------	
REVISIONS 2	------	------	------	DATE
REVISIONS 3	------	------	------	
REVISIONS 4	------	------	------	
FIELD CHANGES	------	------	------	

JOCK STREAM BRIDGE
JOCK STREAM
MONMOUTH KENNEBEC COUNTY

SUPERSTR. REINFORCING

SHEET NUMBER

16

OF 18

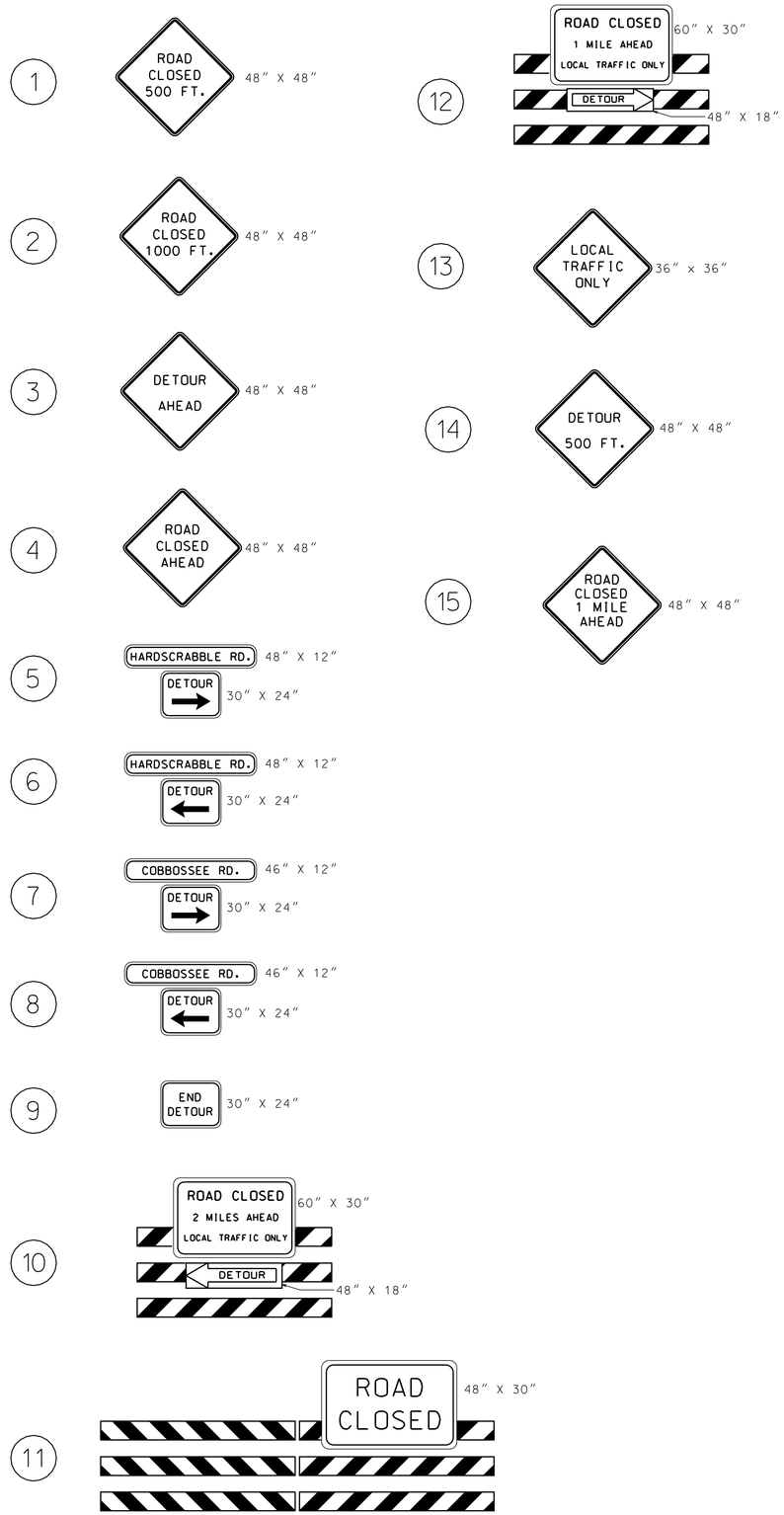

NOT TO SCALE

General Notes

1) Other signs may be needed as directed by the Resident.

2) Bi-directional yellow TOM's shall be placed along center of roadway, on hill crests and curves of Whipporwill and Town Farm Roads.

STATE OF MAINE
DEPARTMENT OF TRANSPORTATION

BR-1671(600)X

BRIDGE NO. 2412

PIN 16716.00

BRIDGE PLANS

		BY	DATE
PROJ. MANAGER	K. Cummings		
DESIGN-DETAILED	R. Naous	Team Soult	Aug. 2010
CHECKED-REVIEWED	G. Gustafson		
DESIGN2-DETAILED2			
DESIGN3-DETAILED3			
REVISIONS 1			
REVISIONS 2			
REVISIONS 3			
REVISIONS 4			
FIELD CHANGES			

SIGNATURE

P.E. NUMBER

DATE

JOCK STREAM BRIDGE
JOCK STREAM
MONMOUTH KENNEBEC COUNTY

DETOUR PLAN

SHEET NUMBER
17
OF 18

Filename: ...\bridge\msta\017_DetourPlan.dgn Division: BRIDGE Username: alan.nadeau Date:8/30/2010

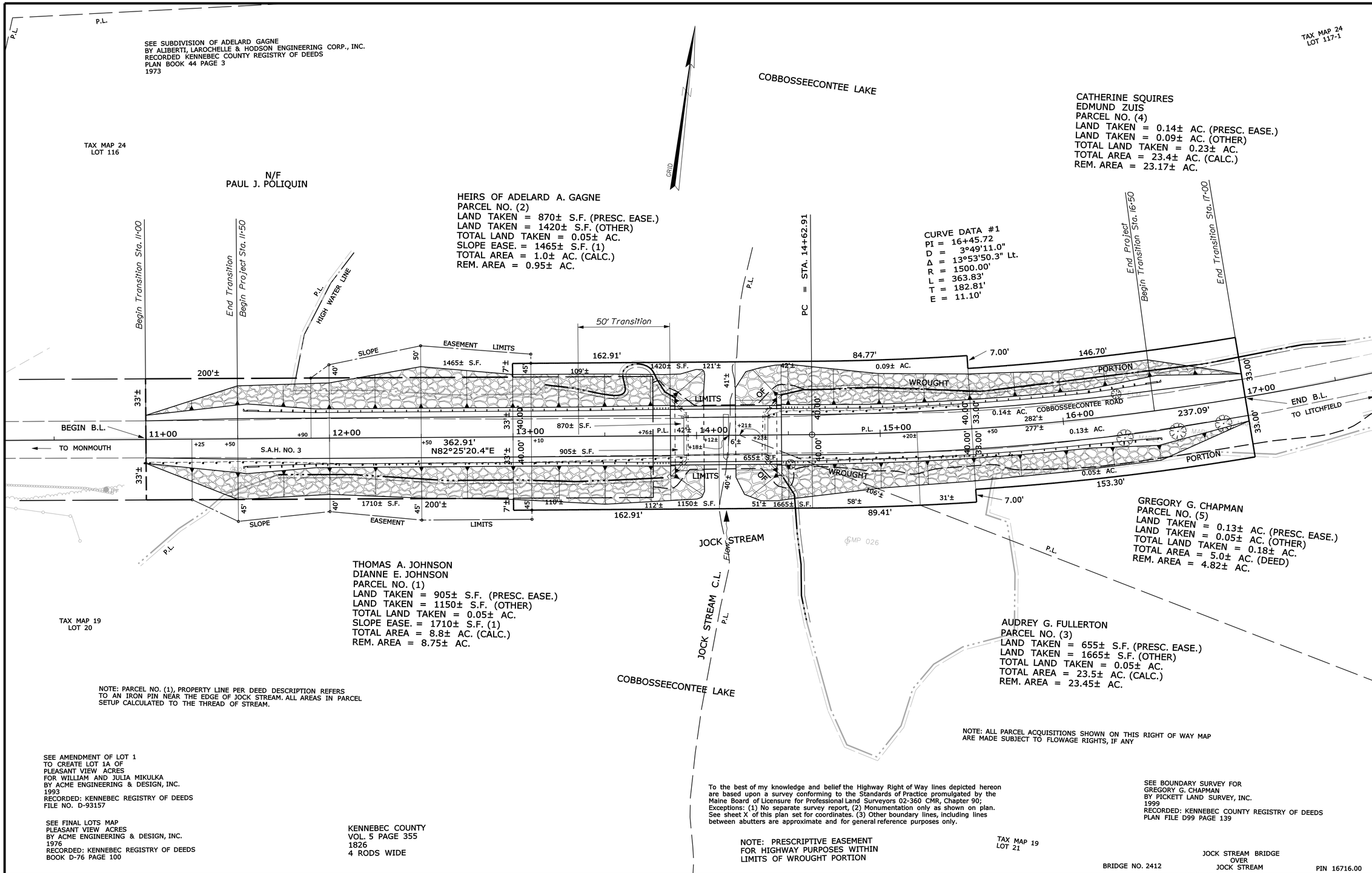

NOTE: PARCEL NO. (1), PROPERTY LINE PER DEED DESCRIPTION REFERS TO AN IRON PIN NEAR THE EDGE OF JOCK STREAM. ALL AREAS IN PARCEL SETUP CALCULATED TO THE THREAD OF STREAM.

NOTE: ALL PARCEL ACQUISITIONS SHOWN ON THIS RIGHT OF WAY MAP ARE MADE SUBJECT TO FLOWAGE RIGHTS, IF ANY

SEE AMENDMENT OF LOT 1
TO CREATE LOT 1A OF
PLEASANT VIEW ACRES
FOR WILLIAM AND JULIA MIKULKA
BY ACME ENGINEERING & DESIGN, INC.
1993
RECORDED: KENNEBEC REGISTRY OF DEEDS
FILE NO. D-93157

SEE FINAL LOTS MAP
PLEASANT VIEW ACRES
BY ACME ENGINEERING & DESIGN, INC.
1976
RECORDED: KENNEBEC REGISTRY OF DEEDS
BOOK D-76 PAGE 100

KENNEBEC COUNTY
VOL. 5 PAGE 355
1826
4 RODS WIDE

To the best of my knowledge and belief the Highway Right of Way lines depicted hereon are based upon a survey conforming to the Standards of Practice promulgated by the Maine Board of Licensure for Professional Land Surveyors 02-360 CMR, Chapter 90; Exceptions: (1) No separate survey report, (2) Monumentation only as shown on plan. See sheet X of this plan set for coordinates. (3) Other boundary lines, including lines between abutters are approximate and for general reference purposes only.

NOTE: PRESCRIPTIVE EASEMENT FOR HIGHWAY PURPOSES WITHIN LIMITS OF WROUGHT PORTION

TAX MAP 19
LOT 21

SEE BOUNDARY SURVEY FOR
GREGORY G. CHAPMAN
BY PICKETT LAND SURVEY, INC.
1999
RECORDED: KENNEBEC COUNTY REGISTRY OF DEEDS
PLAN FILE D99 PAGE 139

BRIDGE NO. 2412 — JOCK STREAM BRIDGE OVER JOCK STREAM — PIN 16716.00

SYMBOLS
- IP or IPF (IRON PIPE or PIN FOUND)
- ST. (SEPTIC TANK)
- (ROW MONUMENT)
- &BM (TRAVERSE POINT)
- (WELL)
- GROUNDING UNIT LINE
- CONSTRUCTION LIMIT LINE
- PROPERTY LINE
- LIMITS OF "WRONG" RIGHT PORTION (L.O.W.P.)
- EXISTING RIGHT OF WAY
- NEW RIGHT OF WAY
- NEW ROW WITHIN EXIST. ROW
- CONTROL OF ACCESS
- WATER LINE
- GAS LINE
- ELECTRIC LINE
- TELEPHONE LINE
- SEWER LINE

ITEM	TECH	CHECKED
BASE MAP		
EXIST. R/W	D.W.B.	
PROP. LINES	D.W.B.	
AREAS	D.W.B.	P.N.S.

STATE OF MAINE
DEPARTMENT OF TRANSPORTATION
16 STATE HOUSE STATION - AUGUSTA, ME 04333-0016
MONMOUTH
RIGHT OF WAY MAP

REVISIONS			
NO.	DATE	DESCRIPTION	BY

PLAN FILED IN PLAN BOOK		PAGE	COUNTY RECORD			
NO.	GRANTOR	INSTRUMENT	DATE	BOOK	PAGE
		COND.	8/24/10	10508	127

DAVID A. COLE
COMMISSIONER
KENNETH L. SWEENEY
CHIEF ENGINEER
DATE

STATE OF MAINE — PETER A. BELANGER 1341 — PROFESSIONAL LAND SURVEYOR

STATE AID HIGHWAY NO. 3
COBBOSSEECONTEE ROAD
MONMOUTH — KENNEBEC COUNTY
FEDERAL AID PROJECT NO. BR-1671(600)X

JULY 2010 | RIGHT-OF-WAY MAP | SCALE 1" = 25' | SHEET 1 OF 1 | D.O.T. FILE NO. 6-436

SHEET NUMBER
18
OF 18

Filename: ...\00\ROW\MSTA\001_RWPLAN1.dgn Division: BRIDGE Username: alan.nadeau Date:8/30/2010