STATE OF MAINE
DEPARTMENT OF TRANSPORTATION

HIRAM
OXFORD COUNTY
ROUTE 113
BR-1560(600)X
PROJECT LENGTH : 0.06 MILES
REHABILITATION

PROJECT LOCATION
STA. 30+31.19 (RLM 45.2) TO 33+43.0 (RLM 45.28)

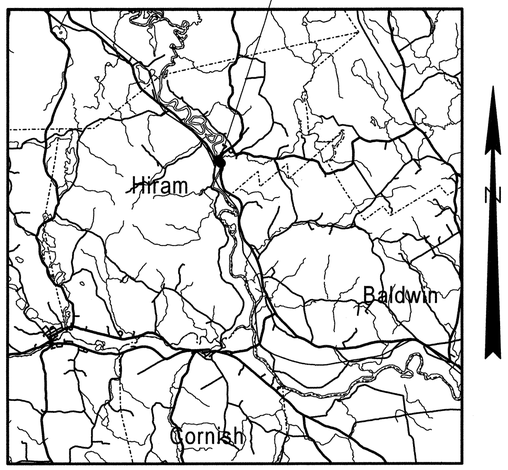

LOCATION MAP

2 0 2 4
Scale in Miles

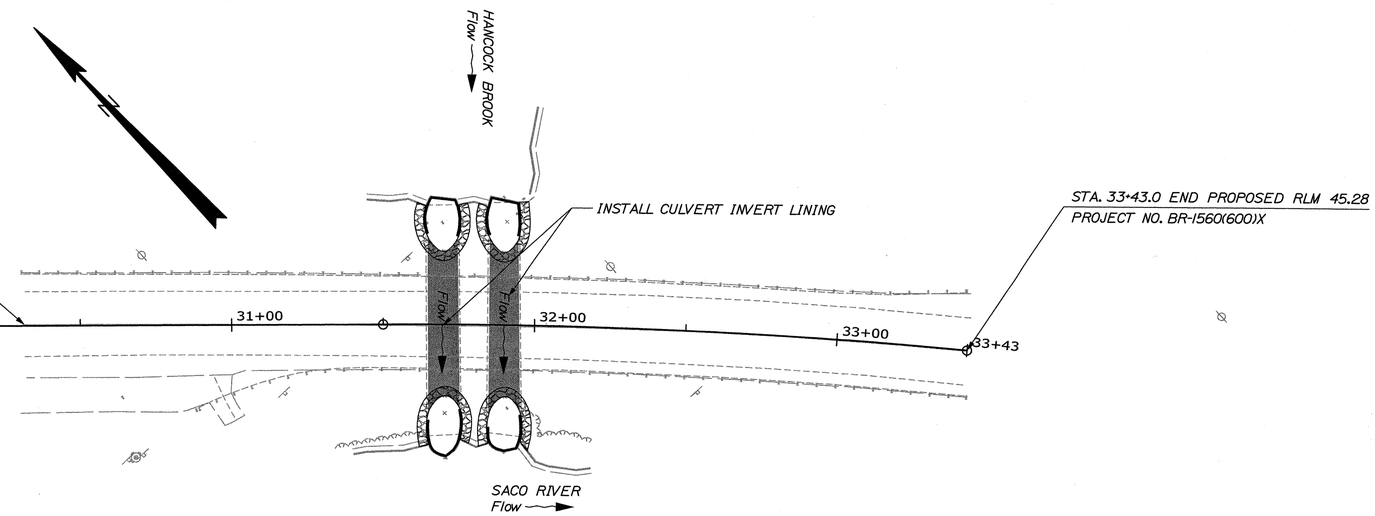

INDEX OF SHEETS

Description	Sheet No.
Title Sheet	1
Typical Sections	2,3,4
Estimated Quantities	5
General Notes	6
Rebar Schedule	7
Plan/Profile	8
Cross - Sections	9
Right of Way Map	10

PLAN LEGEND

Town, County, State
Property Lines
R/W Lines-Existing
R/W Lines-Proposed
Culvert-Existing
Culvert Proposed
Curbing — Existing — Proposed
Type 1
Type 3
Type 5
Outline of Bodies of Water
Ledge
Buildings
Trees — Conifer — Deciduous
Tree Line
Clearing Limit Line — CLL
Centerline-Existing
Centerline-Proposed — 10+00
Travelway-Existing
Travelway-Proposed
Railroad
Catch Basins — Existing — Proposed
Manholes — Existing — Proposed
Proposed Underdrain
Proposed Ditch
Existing Ditch
Utility Poles — Existing — Proposed
Fire Hydrants — Existing — Proposed
Existing Water Line
Existing San. Sewer
Existing San. Sewer Manhole
Guardrail-Existing
Guardrail-Proposed
Guardrail-Cable, Other

TRAFFIC DATA

Current (2009) AADT 3100
Future (2021) AADT 3470
Design Speed (mph) .....35 mph
Functional Class:..... Major Collector

LAYOUT SCALE

25 0 25 50
Scale in Feet

PROGRAM AREA: BRIDGE
SCOPE OF WORK: BRIDGE CULVERT REHABILITATION

STATE OF MAINE
DEPARTMENT OF TRANSPORTATION

		DATE
APPROVED		
COMMISSIONER:		6/26/09
CHIEF ENGINEER:		06/26/09

STATE OF MAINE — LARRY HAMILTON — No. 7115 — LICENSED PROFESSIONAL ENGINEER

SIGNATURE	
P.E. NUMBER	7115
DATE	6-25-09

PROJECT INFORMATION

PROGRAM	
PROJECT MANAGER	
DESIGNER	
CONSULTANT	
PROJECT RESIDENT	
CONTRACTOR	
PROJECT COMPLETION DATE	

PIN 15606.00

BR-1560(600)X

HIRAM
ROUTE 113

TITLE SHEET

SHEET NUMBER
1
OF 10

Filename: ...\00\HIGHWAY\MSTA\001_Title.dgn Division: HIGHWAY Username: daniel.m.loring Date:6/25/2009

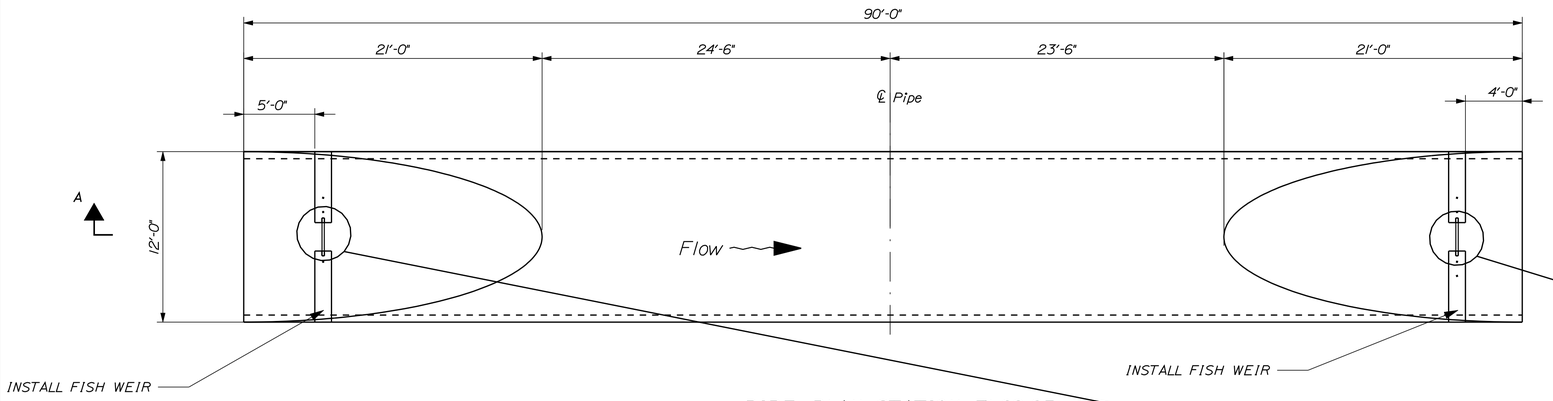

PIPE PLAN STATION 31+69.85

NOT TO SCALE

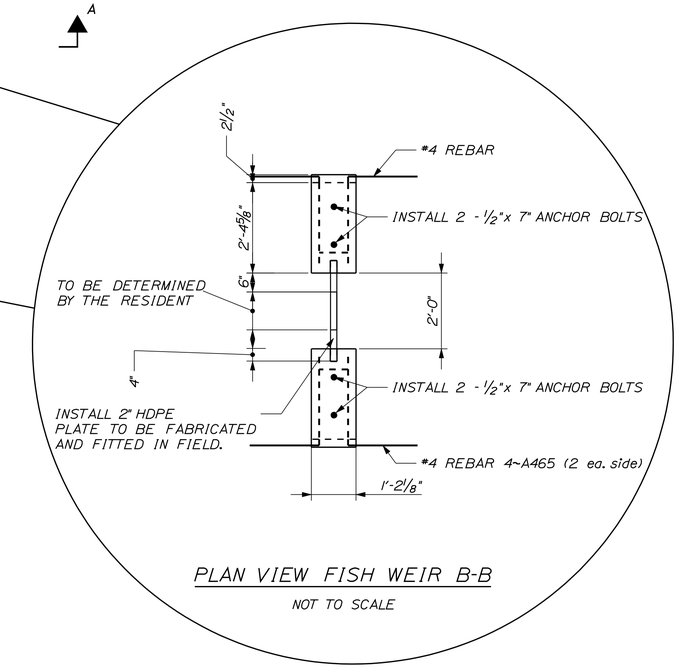

PLAN VIEW FISH WEIR B-B

NOT TO SCALE

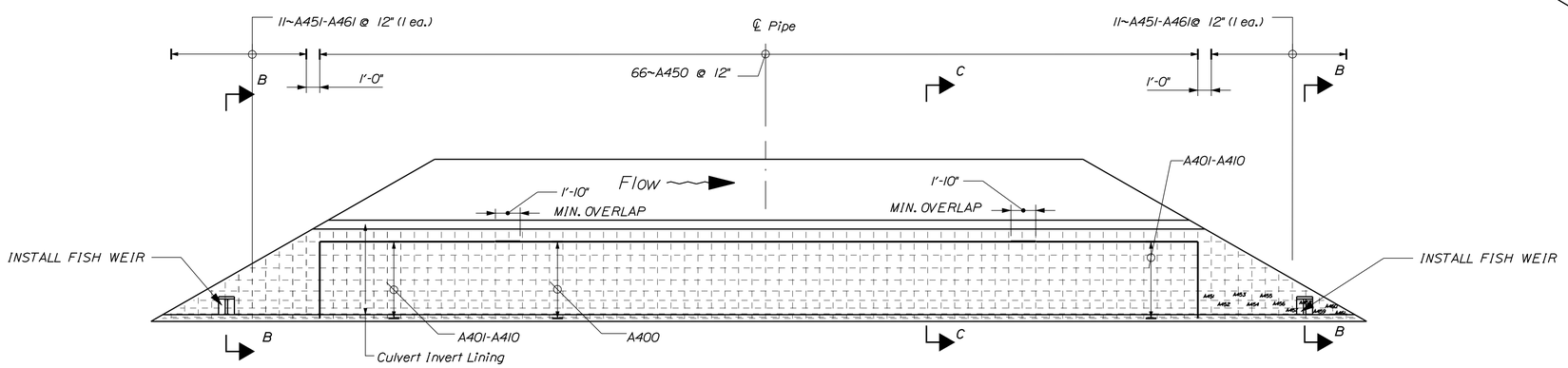

SECTION A-A STATION 31+69.85

NOT TO SCALE

PIPE NOTES

1. Surfaces of the pipe against which concrete is to be placed shall be thoroughly cleaned so as to remove all loose corrosion. In areas where the metal is non - existant, a preliminary concrete placement shall be made, using forms where required, to fill voids and to establish the original lines of the pipe. The final placement shall then be made as shown. Payment for this work will be considered incidental to Item No. 502.325, Structural Concrete Invert Lining.

2. Two rows of shear connectors shall be staggered longitudinally at 12" spacing along each side of the pipe barrel. Shear connectors shall be ½" x 3" studs or machine bolts welded to the crests of the corrugations. Approximately 264 shear connectors are required. Payment will be considered incidental to contract items.

3. Reinforcing steel shall have a minimum concrete cover of 2½" unless otherwise shown. Any cutting and bending to field fit reinforcing steel shall be considered incidental to resteel item.

4. The existing structural plate pipe may have a slight deformation requiring field bending and/or cutting of the reinforcing steel.

5. The concrete shall have a rough broom or gun finish along the entire length of the pipe invert.

STATE OF MAINE
DEPARTMENT OF TRANSPORTATION

BR-1560(600)X

PIN 15606.00

HIGHWAY PLANS

PROJ. MANAGER	ROBERT HOUGH	BY	DATE
DESIGN-DETAILED	AARON EATON	AARON EATON	
CHECKED-REVIEWED	-----	-----	-----
DESIGN2-DETAILED2	-----	-----	-----
DESIGN3-DETAILED3	-----	-----	-----
REVISIONS 1	-----	-----	-----
REVISIONS 2	-----	-----	-----
REVISIONS 3	-----	-----	-----
REVISIONS 4	-----	-----	-----
FIELD CHANGES	-----	-----	-----

SIGNATURE

P.E. NUMBER

DATE

HIRAM
ROUTE 113

TYPICAL

SHEET NUMBER

2

OF 10

Filename: ...\highway\msta\002_Typical.dgn Division: HIGHWAY Username: aaron.eaton Date:6/10/2009

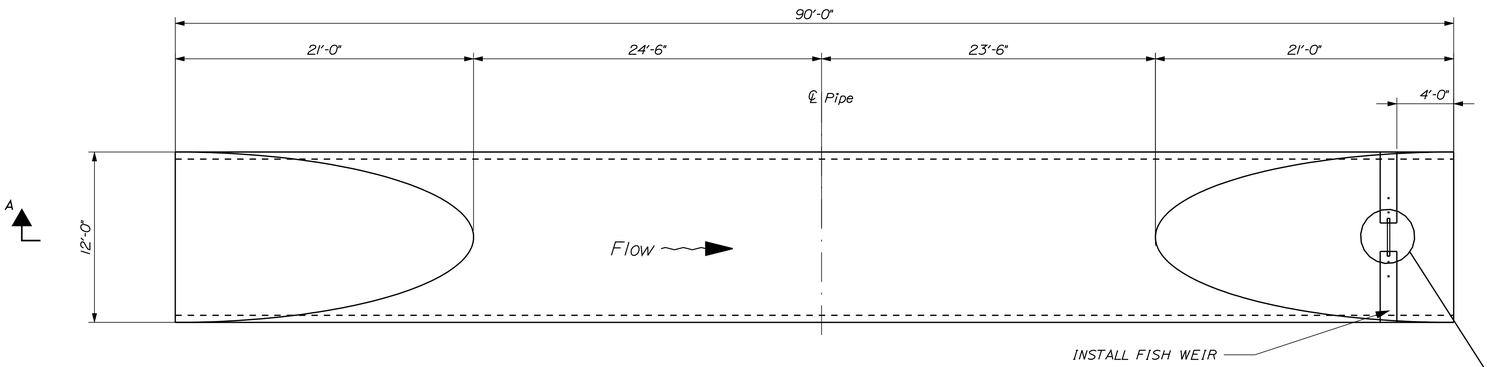

PIPE PLAN STATION 31+89.97

NOT TO SCALE

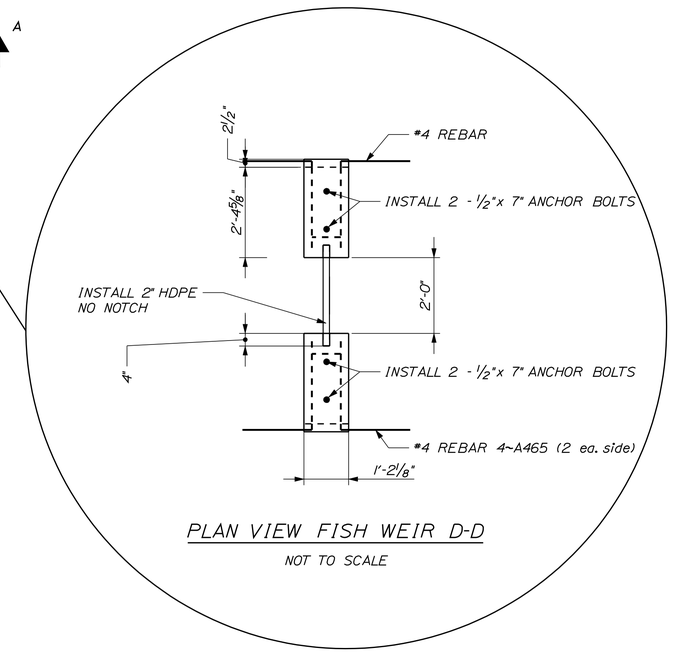

PLAN VIEW FISH WEIR D-D

NOT TO SCALE

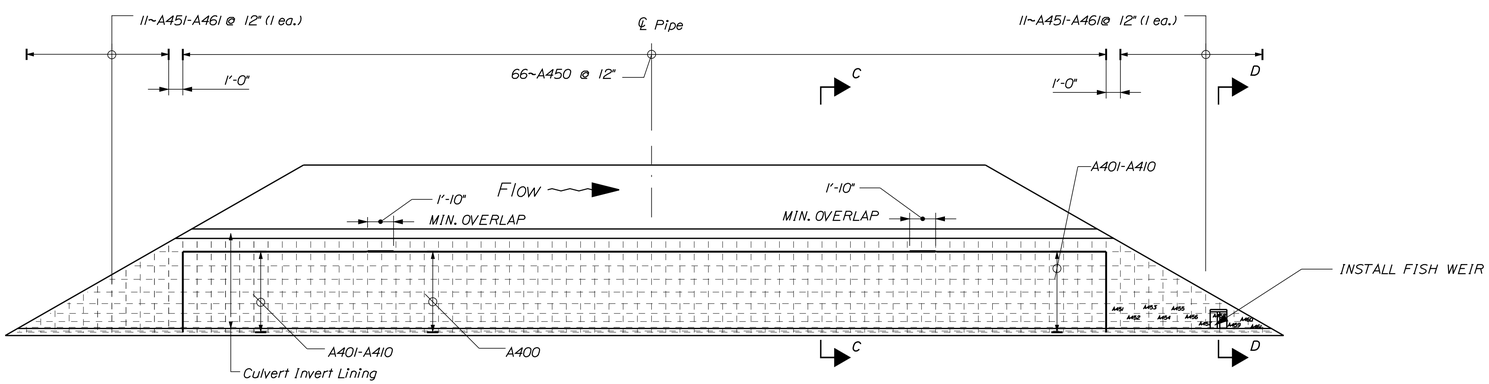

SECTION A-A STATION 31+89.97

NOT TO SCALE

PIPE NOTES

1. Surfaces of the pipe against which concrete is to be placed shall be thoroughly cleaned so as to remove all loose corrosion. In areas where the metal is non - existant, a preliminary concrete placement shall be made, using forms where required, to fill voids and to establish the original lines of the pipe. The final placement shall then be made as shown. Payment for this work will be considered incidental to Item No. 502.325, Structural Concrete Invert Lining.

2. Two rows of shear connectors shall be staggered longitudinally at 12" spacing along each side of the pipe barrel. Shear connectors shall be ½" x 3" studs or machine bolts welded to the crests of the corrugations. Approximately 264 shear connectors are required. Payment will be considered incidental to contract items.

3. Reinforcing steel shall have a minimum concrete cover of 2½" unless otherwise shown. Any cutting and bending to field fit reinforcing steel shall be considered incidental to resteel item.

4. The existing structural plate pipe may have a slight deformation requiring field bending and/or cutting of the reinforcing steel.

5. The concrete shall have a rough broom or gun finish along the entire length of the pipe invert.

STATE OF MAINE
DEPARTMENT OF TRANSPORTATION

BR-1560(600)X

PIN 15606.00

HIGHWAY PLANS

PROJ. MANAGER	BOB HOUGH	BY	DATE
DESIGN-DETAILED	C. GUY	C. GUY	
CHECKED-REVIEWED			
DESIGN2-DETAILED2			
DESIGN3-DETAILED3			
REVISIONS 1			
REVISIONS 2			
REVISIONS 3			
REVISIONS 4			
FIELD CHANGES			

SIGNATURE

P.E. NUMBER

DATE

HIRAM
ROUTE 113

TYPICAL

SHEET NUMBER

3

OF _

Filename: ...\highway\rnsta\003_Typical.dgn Division: HIGHWAY Username: aaron.eaton Date:6/10/2009

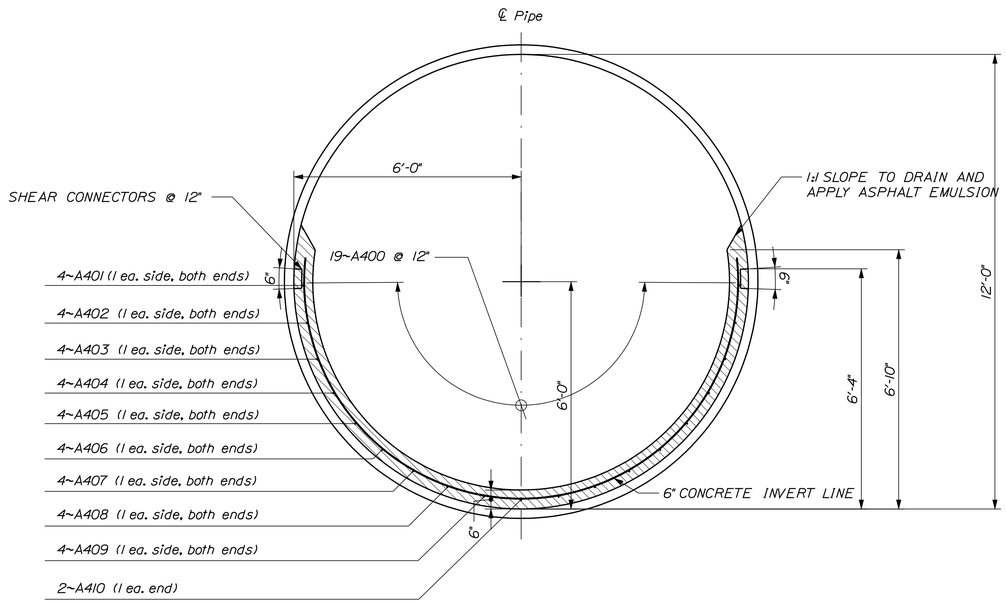

SECTION C-C

NOT TO SCALE

MILL AND FILL
1 ¾" HOT MIX ASPHALT

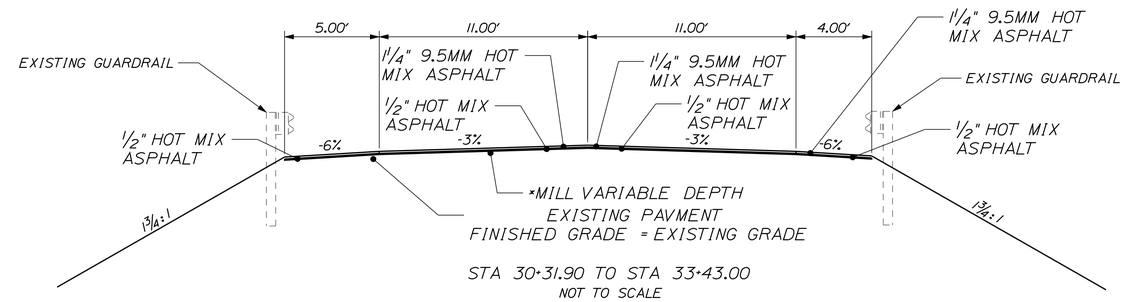

STA 30+31.90 TO STA 33+43.00

NOT TO SCALE

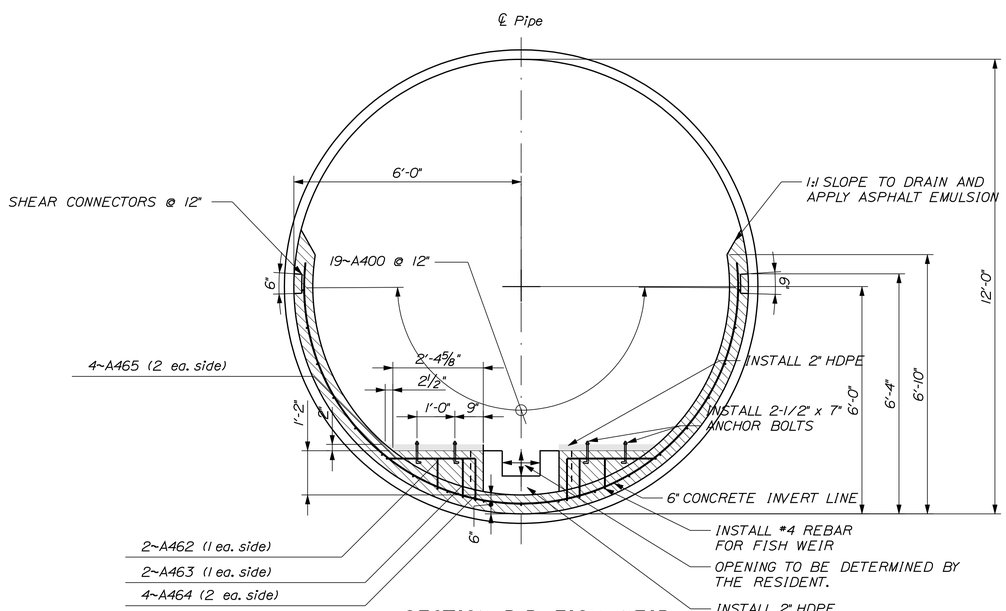

SECTION B-B FISH WEIR

NOT TO SCALE

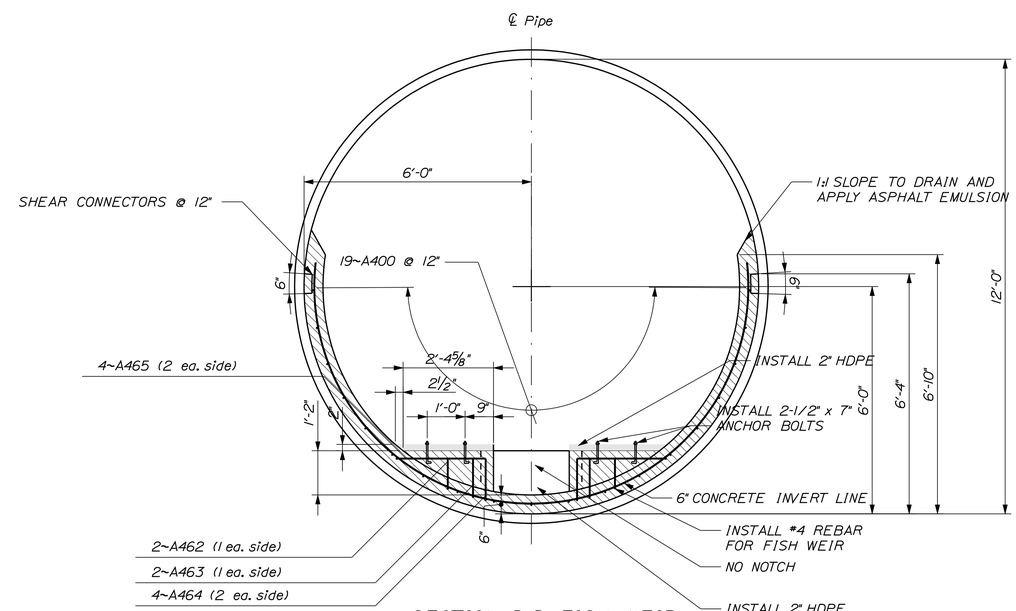

SECTION D-D FISH WEIR

NOT TO SCALE

STATE OF MAINE
DEPARTMENT OF TRANSPORTATION

BR-1560(600)X

PIN 15606.00

HIGHWAY PLANS

PROJ. MANAGER	ROBERT HOUGH	BY	DATE
DESIGN-DETAILED	AARON EATON	AARON EATON	
CHECKED-REVIEWED	-----	-----	-----
DESIGN2-DETAILED2	-----	-----	-----
DESIGN3-DETAILED3	-----	-----	-----
REVISIONS 1	-----		-----
REVISIONS 2	-----		-----
REVISIONS 3	-----		-----
REVISIONS 4	-----		-----
FIELD CHANGES	-----		-----

SIGNATURE

P.E. NUMBER

DATE

HIRAM
ROUTE 113

TYPICAL

SHEET NUMBER

4

OF 10

Filename: ...\highway\msto\004_Typical.dgn Division: HIGHWAY Username: aaron.eaton Date:6/10/2009

ESTIMATED QUANTITIES

ITEM NO.	DESCRIPTION	QUANTITY	UNIT
202.202	REMOVING PAVEMENT SURFACE	1080	SY
403.209	HOT MIX ASPHALT 9.5 MM HMA (INCID.)	5	T
403.210	HOT MIX ASPHALT 9.5 MM HMA	80	T
403.211	HOT MIX ASPHALT (SHIM)	30	T
409.15	BITUMINOUS TACK COAT APPLIED	90	G
502.325	STR CONC CULVERT INVERT LINING STATION 31+69.85 (29.11CY)	1	LS
502.325	STR CONC CULVERT INVERT LINING STATION 31+89.97 (29.11CY)	1	LS
503.12	REINF STEEL, FAB & DEL	4296	LB
503.13	REINF STEEL, PLACING	4296	LB
511.07	COFFERDAM: UPSTREAM	1	LS
511.07	COFFERDAM: DOWNSTREAM	1	LS
610.08	PLAIN RIPRAP	30	CY
620.58	NON WOVEN GEOTEXTILE	510	SY
627.711	WH OR YELL PAINT PVMT MARKING LINE	940	LF
629.05	HAND LABOR, STRAIGHT TIME	25	HR
631.12	ALL-PURPOSE EXC (INC OPERATOR)	20	HR
631.172	TRUCK-LARGE (INC OPERATOR)	20	HR
652.33	DRUM	25	EA
652.34	CONE	25	EA
652.35	CONSTRUCTION SIGNS	470	SF
652.36	MAINT OF TRAFFIC CONTR DEVICES	33	CD
652.38	FLAGGER	100	HR
656.75	TEMP. SOIL EROS. AND WATER POLL. CONTROL	1	LS
659.10	MOBILIZATION	1	LS

STATE OF MAINE
DEPARTMENT OF TRANSPORTATION

BR-1560(600)X

PIN
15606.00

HIGHWAY PLANS

PROJ. MANAGER	ROBERT HOUGH	BY	DATE
DESIGN-DETAILED	AARON EATON	AARON EATON	
CHECKED-REVIEWED	-----	-----	-----
DESIGN2-DETAILED2	-----	-----	-----
DESIGN3-DETAILED3	-----	-----	-----
REVISIONS 1	-----		-----
REVISIONS 2	-----		-----
REVISIONS 3	-----		-----
REVISIONS 4	-----		-----
FIELD CHANGES	-----		-----

SIGNATURE

P.E. NUMBER

DATE

HIRAM
ROUTE 113

ESTIMATED QUANTITIES

SHEET NUMBER
5
OF 10

Filename: ...\highway\rmsto\005_Estimate.dgn Division: HIGHWAY Username: aaron.eaton Date:6/10/2009

GENERAL NOTES

1. THE UTILITIES INVOLVED IN THIS CONTRACT ARE AS FOLLOWS:
   CENTRAL MAINE POWER
   FAIRPOINT COMMUNICATIONS
   TIME WARNER CABLE
   HIRAM FIRE DEPARTMENT

2. NO UTILITY INVOLVEMENT IS ANTICIPATED.

3. ALL CLEARING SHALL BE CONSIDERED INCIDENTAL TO THE CONTRACT AND NO SEPARATE PAYMENT WILL BE MADE. THE ACTUAL LINES FOR CLEARING SHALL BE ESTABLISHED IN THE FIELD BY THE CONTRACTOR AS INDICATED ON THE PLANS AND APPROVED BY THE RESIDENT.

4. THE CONTRACTOR SHALL PLAN AND CONDUCT THEIR WORK ACCORDINGLY SO THAT UPON FINAL COMPLETION OF THE PROJECT THERE IS NO DROP-OFF FROM THE EDGE OF SHOULDER PAVEMENT. ALL REMAINING OR DISTURBED MATERIAL ON SLOPES OR IN DITCHES ON THE PROJECT SHALL BE CAPABLE OF ATTAINING A GROWTH OF GRASS THAT IS ACCEPTABLE ACCORDING TO STANDARD SPECIFICATION 618.10. NO SEPARATE PAYMENT WILL BE MADE FOR THIS WORK.

5. ALL WASTE MATERIAL NOT USED ON THE PROJECT SHALL BE DISPOSED OF OFF THE PROJECT IN WASTE AREAS APPROVED BY THE RESIDENT.

6. A 3' PAVED LIP SHALL BE PLACED AT ALL GRAVEL ENTRANCES UNLESS OTHERWISE NOTED IN THE PLANS OR DIRECTED BY THE RESIDENT.

7. ANY NECESSARY CLEANING OF EXISTING PAVEMENT PRIOR TO PAVING SHALL BE INCIDENTAL TO THE RELATED PAVING ITEMS.

8. ALL EXISTING PAVED SHOULDERS AND WIDENINGS TO BE RESURFACED AS DIRECTED BY THE RESIDENT.

9. SHOULDER SHIM SHALL TAPER TO 0 INCHES PRIOR TO FACE OF EXISTING CURB AND GUARDRAIL.

10. THE CONTRACTOR WILL BE RESPONSIBLE FOR MAINTAINING ALL EXISTING MAILBOXES TO ENSURE THAT THE MAIL WILL BE DELIVERABLE. NO SEPARATE PAYMENT WILL BE MADE FOR THIS WORK; IT SHALL BE CONSIDERED INCIDENTAL TO THE CONTRACT.

11. ANY DAMAGE TO THE SLOPES CAUSED BY THE CONTRACTOR'S EQUIPMENT, PERSONNEL, OR OPERATION SHALL BE REPAIRED TO THE SATISFACTION OF THE RESIDENT. ALL WORK, EQUIPMENT, AND MATERIALS REQUIRED TO MAKE REPAIRS SHALL BE AT THE CONTRACTOR'S EXPENSE.

12. PLANS OF PREVIOUSLY CONSTRUCTED PROJECTS ARE AVAILABLE ON REQUEST. THESE PROJECTS ARE: 2901.00

13. NO SEPARATE PAYMENT FOR SUPERINTENDENT OR FOREMAN WILL BE MADE FOR THE SUPERVISION OF EQUIPMENT BEING PAID FOR UNDER THE EQUIPMENT RENTAL ITEMS.

14. "UNDETERMINED LOCATIONS" SHALL BE DETERMINED BY THE RESIDENT.

15. STATIONS REFERENCED ARE APPROXIMATE.

16. ALL WORK SHALL BE DONE IN ACCORDANCE WITH THE MAINE DEPARTMENT OF TRANSPORTATION'S BEST MANAGEMENT PRACTICES FOR EROSION CONTROL & SEDIMENT CONTROL, FEBRUARY, 2008.

17. CONTRACTOR WILL FINAL STRIPE THE PROJECT. THE CONTRACTOR IS RESPONSIBLE FOR TRANSFERRING THE EXISTING STRIPING PATTERN TO THE SURFACE COURSE.

STATE OF MAINE
DEPARTMENT OF TRANSPORTATION

BR-1560(600)X

PIN 15606.00

HIGHWAY PLANS

PROJ. MANAGER	ROBERT HOUGH	BY	DATE
DESIGN-DETAILED	AARON EATON	AARON EATON	
CHECKED-REVIEWED	-----	-----	-----
DESIGN2-DETAILED2	-----	-----	-----
DESIGN3-DETAILED3	-----	-----	-----
REVISIONS 1	-----	-----	-----
REVISIONS 2	-----	-----	-----
REVISIONS 3	-----	-----	-----
REVISIONS 4	-----	-----	-----
FIELD CHANGES	-----	-----	-----

SIGNATURE

P.E. NUMBER

DATE

HIRAM
ROUTE 113

CONSTRUCTION NOTES

Filename: ...\msta\006_GeneralNotes.dgn Division: HIGHWAY Username: aaron.eaton Date:6/10/2009

STRAIGHT BARS

MARK	QTY.	LENGTH	LOCATION	MARK	QTY.	LENGTH	LOCATION
PIPE STATION 31+69.85							
A400	19	40' - 0"	LONGITUDINAL				
A401	4	15' - 7"	LONGITUDINAL				
A402	4	17' - 4"	LONGITUDINAL				
A403	4	19' - 0"	LONGITUDINAL				
A404	4	20' - 6 3/4"	LONGITUDINAL				
A405	4	21' - 11 3/4"	LONGITUDINAL				
A406	4	23' - 2 1/4"	LONGITUDINAL				
A407	4	24' - 2 1/4"	LONGITUDINAL				
A408	4	24' - 11"	LONGITUDINAL				
A409	4	25' - 4 1/4"	LONGITUDINAL				
A410	2	25' - 6"	LONGITUDINAL				
PIPE STATION 31+89.97							
A400	19	40' - 0"	LONGITUDINAL				
A401	4	15' - 7"	LONGITUDINAL				
A402	4	17' - 4"	LONGITUDINAL				
A403	4	19' - 0"	LONGITUDINAL				
A404	4	20' - 6 3/4"	LONGITUDINAL				
A405	4	21' - 11 3/4"	LONGITUDINAL				
A406	4	23' - 2 1/4"	LONGITUDINAL				
A407	4	24' - 2 1/4"	LONGITUDINAL				
A408	4	24' - 11"	LONGITUDINAL				
A409	4	25' - 4 1/4"	LONGITUDINAL				
A410	2	25' - 6"	LONGITUDINAL				
MARK	QTY.	LENGTH	LOCATION	MARK	QTY.	LENGTH	LOCATION

BENT BARS

MARK	QTY.	LENGTH	TYPE	A	B	C	D	E	F	G	H	O	R	LOCATION
PIPE STATION 31+69.85														
A450	66	19' - 7 3/4"	CR											TRANSVERSE
A451	2	19' - 0 1/2"	CR											TRANSVERSE
A452	2	17' - 10 3/4"	CR											TRANSVERSE
A453	2	16' - 9"	CR											TRANSVERSE
A454	2	15' - 6 7/8"	CR											TRANSVERSE
A455	2	14' - 4 1/2"	CR											TRANSVERSE
A456	2	13' - 1 3/8"	CR											TRANSVERSE
A457	2	11' - 9 1/2"	CR											TRANSVERSE
A458	2	10' - 4 1/4"	CR											TRANSVERSE
A459	2	8' - 9"	CR											TRANSVERSE
A460	2	6' - 10 7/8"	CR											TRANSVERSE
A461	2	4' - 3 3/4"	CR											TRANSVERSE
FISH WEIRS STATION 31+69.85														
A462	4	4' -1 1/4"	SL	10 "	9 1/2"	9 1/4"	9 1/2"	10 "						
A463	4	4' - 5 3/4"	SL	10 "	1' - 0 1/4"	9 1/4"	1' - 0 1/4"	10 "						
A464	8	1' - 11 1/4"	L	1' - 1 1/4"	10 "									
A465	8	4' - 2 "	L	2' - 4"	1' - 10"									
PIPE STATION 31+89.97														
A450	66	19' - 7 3/4"	CR											TRANSVERSE
A451	2	19' - 0 1/2"	CR											TRANSVERSE
A452	2	17' - 10 3/4"	CR											TRANSVERSE
A453	2	16' - 9"	CR											TRANSVERSE
A454	2	15' - 6 7/8"	CR											TRANSVERSE
A455	2	14' - 4 1/2"	CR											TRANSVERSE
A456	2	13' - 1 3/8"	CR											TRANSVERSE
A457	2	11' - 9 1/2"	CR											TRANSVERSE
A458	2	10' - 4 1/4"	CR											TRANSVERSE
A459	2	8' - 9"	CR											TRANSVERSE
A460	2	6' - 10 7/8"	CR											TRANSVERSE
A461	2	4' - 3 3/4"	CR											TRANSVERSE
FISH WEIR STATION 31+89.97														
A462	2	4' -1 1/4"	SL	10 "	9 1/2"	9 1/4"	9 1/2"	10 "						
A463	2	4' - 5 3/4"	SL	10 "	1' - 0 1/4"	9 1/4"	1' - 0 1/4"	10 "						
A464	4	1' - 11 1/4"	L	1' - 1 1/4"	10 "									
A465	4	4' - 2 "	L	2' - 4"	1' - 10"									
MARK	QTY.	LENGTH	TYPE	A	B	C	D	E	F	G	H	O	R	LOCATION

TYPE - BENDING DIAGRAMS

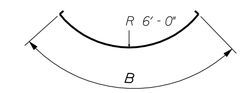

CR

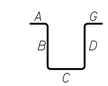

SL

L

All dimensions are out-to-out of bar.

Bending details and hooks shall conform to the recommendations of the current revision of ACI Standard 315 and ACI Standard 318.

Reinforcing Bar: ASTM A615/A615M, Grade 60

GENERAL NOTES

1. The first two digits following the letter(s) of the mark indicate the size ofthe bar:

   Mark "A502" = bar size #5
   Mark "P805" = bar size #8
   Mark "S650" = bar size #6

2. Each crank bar, Type B, may be replaced by two (2) straight bars (one top and one bottom) of the same bar size as the crank bar. Payment in either case shall be based on crank bars as schedule on the plans.

STATE OF MAINE
DEPARTMENT OF TRANSPORTATION

BR-1560(600)X

PIN 15606.00

BRIDGE NO. 3879

BRIDGE PLANS

		BY	DATE
PROJ. MANAGER	ROBERT HOUGH		
DESIGN-DETAILED	AARON EATON	AARON EATON	------
CHECKED-REVIEWED	------	------	------
DESIGN2-DETAILED2	------	------	------
DESIGN3-DETAILED3	------	------	------
REVISIONS 1	------		
REVISIONS 2	------		
REVISIONS 3	------		
REVISIONS 4	------		
FIELD CHANGES	------		

SIGNATURE

P.E. NUMBER

DATE

HIRAM
ROUTE 113

REINFORCING
STEEL SCHEDULE

SHEET NUMBER

7

OF 10

Filename: ...\msta\007_Rebar Schedule.dgn Division: HIGHWAY Username: aaron.eaton Date:6/10/2009

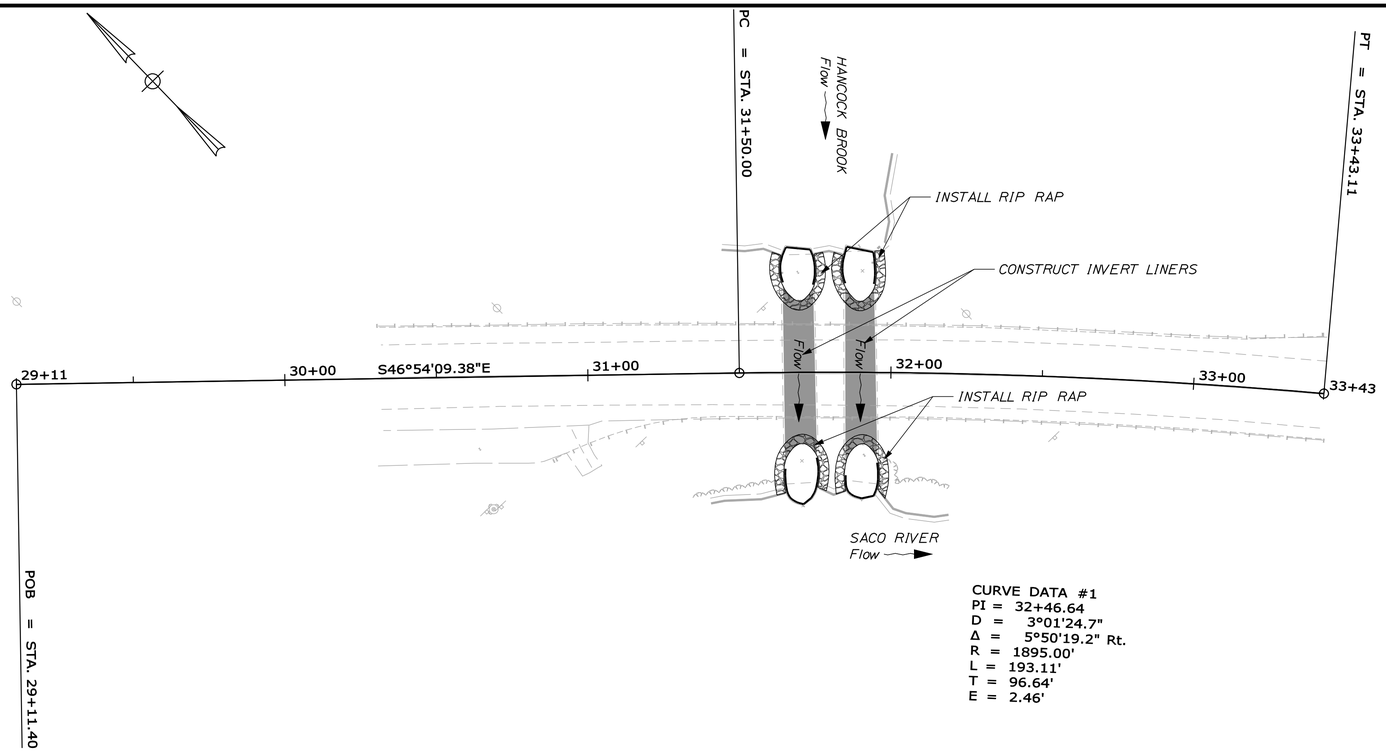

CURVE DATA #1
PI = 32+46.64
D = 3°01'24.7"
Δ = 5°50'19.2" Rt.
R = 1895.00'
L = 193.11'
T = 96.64'
E = 2.46'

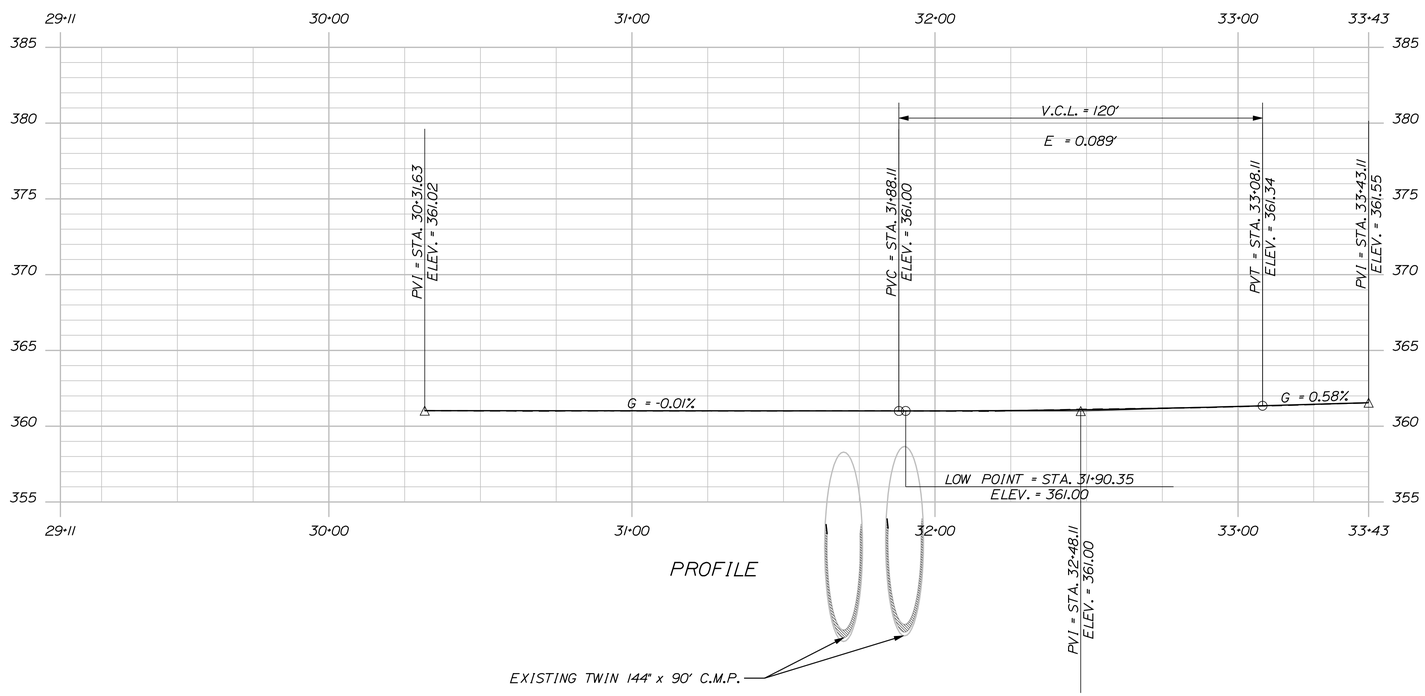

CONSTRUCTION NOTES

202.202 REMOVE EXISTING PAVEMENT MAIN LINE ONLY

Station	Station
30+32.0	33+43.0

610.08 PLAIN RIPRAP

Side	Station
RT	31+69.9
RT	31+90.0
LT	31+69.9
LT	31+90.0

620.58 EROSION CONTROL GEOTEXTILE

Side	Station
RT	31+69.9
RT	31+90.0
LT	31+69.9
LT	31+90.0

STATE OF MAINE
DEPARTMENT OF TRANSPORTATION

BR-1560(600)X

PIN 15606.00

HIGHWAY PLANS

		BY	DATE
PROJ. MANAGER	ROBERT HOUGH		
DESIGN-DETAILED	AARON EATON	AARON EATON	-----
CHECKED-REVIEWED	-----	-----	-----
DESIGN2-DETAILED2	-----	-----	-----
DESIGN3-DETAILED3	-----	-----	-----
REVISIONS 1	-----	-----	-----
REVISIONS 2	-----	-----	-----
REVISIONS 3	-----	-----	-----
REVISIONS 4	-----	-----	-----
FIELD CHANGES	-----	-----	-----

SIGNATURE

P.E. NUMBER

DATE

HIRAM
ROUTE 113

PLAN & PROFILE

SHEET NUMBER
8
OF 10

STA. 2911.40 TO STA. 3343.11

Filename: ...\highway\msta\008_HDPLAN1.DGN Division: HIGHWAY Username: aaron.eaton Date:6/10/2009

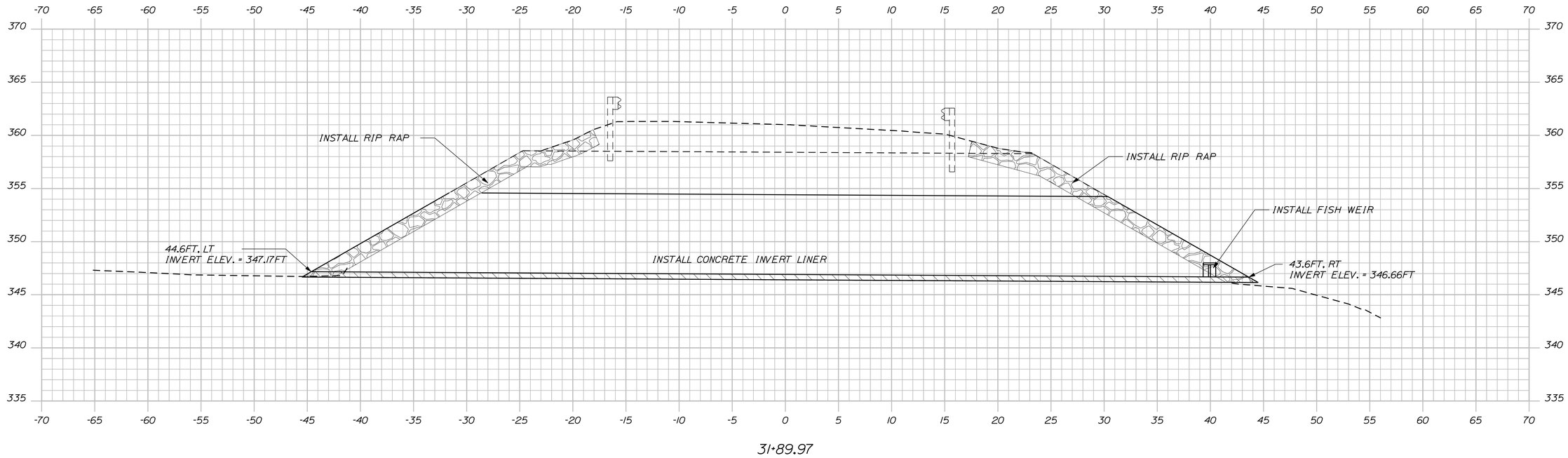

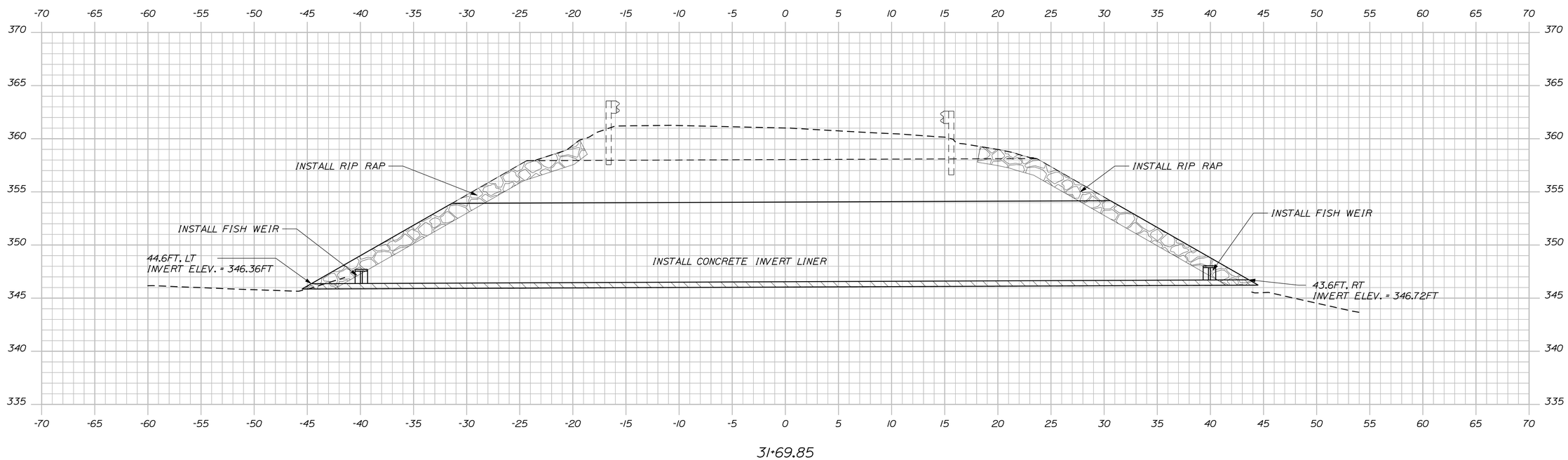

STATE OF MAINE
DEPARTMENT OF TRANSPORTATION

BR-1560(600)X

PIN 15606.00

HIGHWAY PLANS

PROJ. MANAGER	ROBERT HOUGH	BY	DATE
DESIGN-DETAILED	AARON EATON	AARON EATON	------
CHECKED-REVIEWED	------	------	------
DESIGN2-DETAILED2	------	------	------
DESIGN3-DETAILED3	------	------	------
REVISIONS 1	------	------	------
REVISIONS 2	------	------	------
REVISIONS 3	------	------	------
REVISIONS 4	------	------	------
FIELD CHANGES	------	------	------

SIGNATURE

P.E. NUMBER

DATE

HIRAM
ROUTE 113

CROSS SECTIONS

SHEET NUMBER

9

OF 10

Sta. 31+69.85 to Sta. 31+89.97

Filename: ...\00\highway\msta\009_Xsect.dgn Division: HIGHWAY Username: aaron.eaton Date:6/10/2009

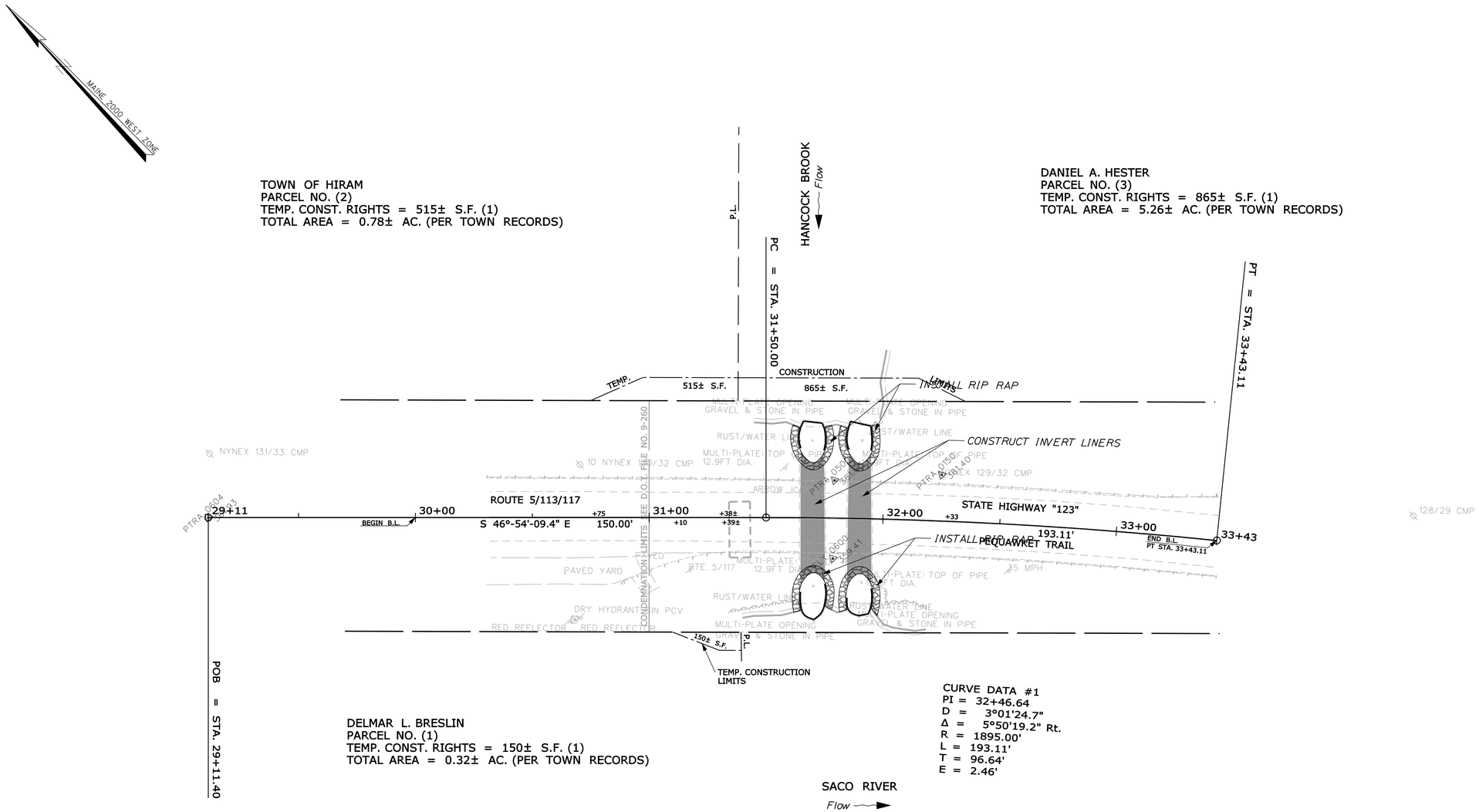

CURVE DATA #1
PI = 32+46.64
D = 3°01'24.7"
Δ = 5°50'19.2" Rt.
R = 1895.00'
L = 193.11'
T = 96.64'
E = 2.46'

CURVE DATA
P.I. STA. 32+46.64
D = 3°-01'-24.7"
Δ = 5°-50'-19.2" RT
T = 96.64
L = 193.01
E =
R = 1,895.00'

EXISTING R/W

1.) OXFORD COUNTY COMMISSIONERS RECORDS
VOL.UME 1 PAGE 166
1817 6 RODS WIDE

2.) D.O.T. FILE NO. 9-260
SHEET 2 OF 2
O.C.R.D.W.D. PLAN BOOK 11 PAGE 83

AS-BUILT PLAN

1.) STATE OF MAINE - STATE HIGHWAY COMMISSION
PLAN & PROFILE
HIRAM - OXFORD COUNTY
MAINE FEDERAL AID SECONDARY
PROJECT NO. S-364(2)
DATE 1950

PIN 15606.00

SYMBOLS
IP (IRON PIPE or PIN)
S.T. (SEPTIC TANK)
(ROW MONUMENT)
BM (TRAVERSE POINT)
WELL (WELL)
GRADING LIMIT LINE
CONSTRUCTION LIMIT LINE
PROPERTY LINE
LIMITS OF WROUGHT PORTION
EXISTING RIGHT OF WAY
NEW RIGHT OF WAY
NEW ROW WITHIN EXIST. ROW
CONTROL OF ACCESS
WATER LINE
GAS LINE
ELECTRIC LINE
TELEPHONE LINE
SEWER LINE

ITEM	TECH	CHECKED
BASE MAP		
EXIST. R/W		
PROP. LINES		
AREAS		

STATE OF MAINE
DEPARTMENT OF TRANSPORTATION
16 STATE HOUSE STATION - AUGUSTA, ME 04333-0016

RIGHT OF WAY MAP

REVISIONS			
NO.	DATE	DESCRIPTION	BY

PLAN FILED IN PLAN BOOK PAGE COUNTY RECORD

NO.	GRANTOR	INSTRUMENT	DATE	BOOK	PAGE

COMMISSIONER

CHIEF ENGINEER

DATE

BR-1560(600)X

SCALE 1" = 25'

RIGHT-OF-WAY MAP
SHEET XX OF XX

SHEET NUMBER
10
OF 10

Filename: ...\highway\msta\010_RWPLAN1.dgn Division: HIGHWAY Username: aaron.eaton Date:6/10/2009