STATE OF MAINE
DEPARTMENT OF TRANSPORTATION

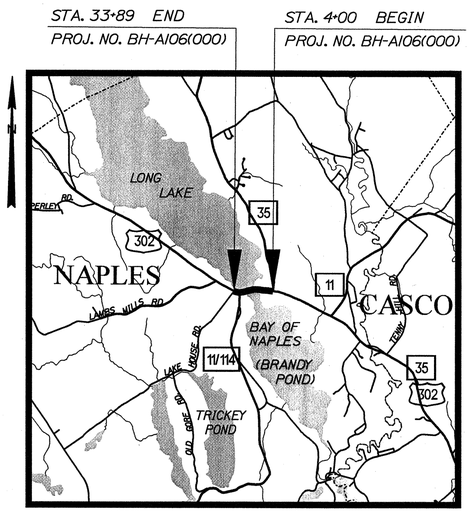

LOCATION MAP

Scale in Miles

NAPLES

CUMBERLAND COUNTY

ROUTES 11/302

FEDERAL AID PROJECT NO. BH-A106(000)

PROJECT LENGTH : 0.566 MILES

BRIDGE REPLACEMENT/HIGHWAY RECONSTRUCTION

INDEX OF SHEETS

Description	Sheet No.
Title Sheet	1
Typical Sections	2-4
Special Details	5
Estimated Quantities	6
Drainage Sheets	7-8
General Notes/Earthworks Summary	9-10
Highway Geotechnical Information	11-12
Geometric Sheets	13-17
Plan/Profile Sheets	18-23
Cross-Sections	24-62
Landscape Plans/Concrete Walk Details	63-67
Bridge Plans	68-121
Bridge Geotechnical Information	122-131
Sheet Pile Wall Plans	132-137
Town Dock Details	138
Sheet Pile Wall Railing Details	139-141
Lighting Plans	142-144
Fire Supression Plans	145-151
Right Of Way Plans	152-160

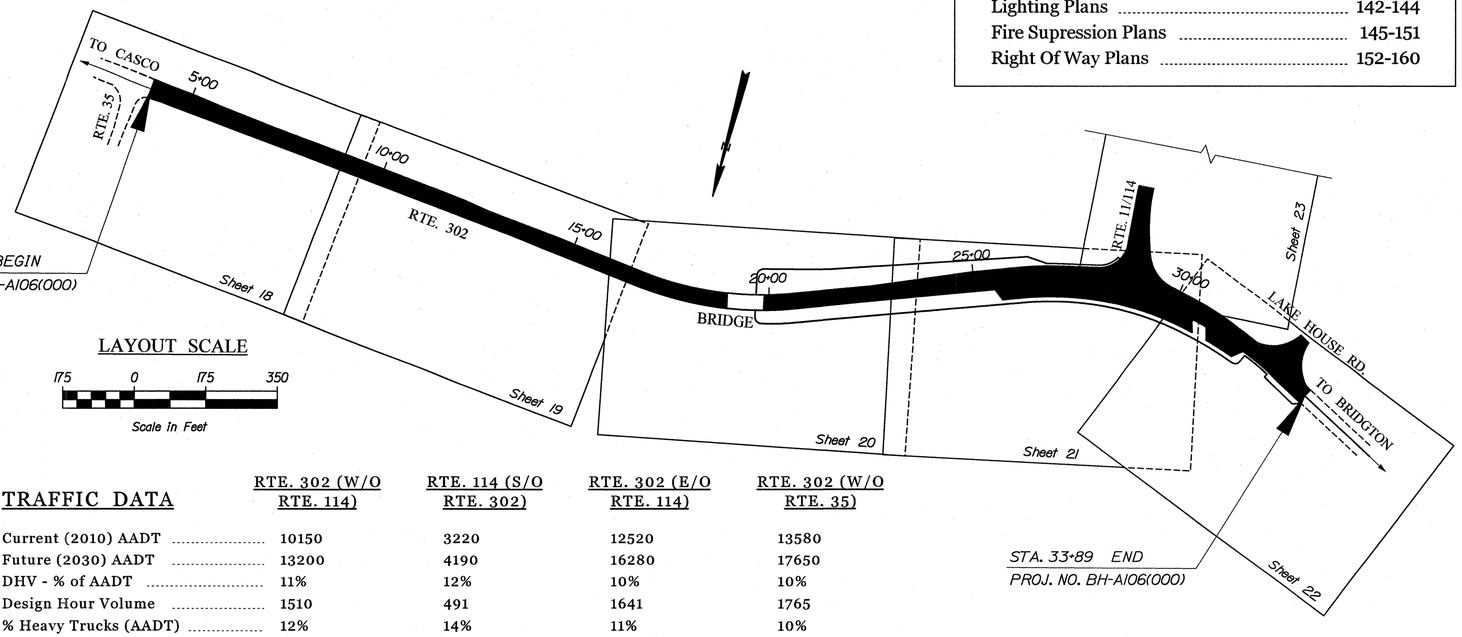

LAYOUT SCALE

Scale in Feet

PLAN LEGEND

- Town, County, State
- Property Lines
- R/W Lines-Existing
- R/W Lines-Proposed
- Culvert-Existing
- Culvert Proposed
- Curbing: Type 1, Type 3, Type 5 — Existing / Proposed
- Outline of Bodies of Water
- Ledge
- Buildings
- Trees: Conifer, Deciduous
- Tree Line
- Clearing Limit Line — CLL
- Centerline-Existing
- Centerline-Proposed
- Travelway-Existing
- Travelway-Proposed
- Railroad
- Catch Basins: Existing / Proposed
- Manholes: Existing / Proposed
- Proposed Underdrain
- Proposed Ditch
- Existing Ditch
- Utility Poles: Existing / Proposed
- Fire Hydrants: Existing / Proposed
- Existing Water Line
- Existing San. Sewer
- Existing San. Sewer Manhole
- Guardrail-Existing
- Guardrail-Proposed
- Guardrail-Cable, Other

TRAFFIC DATA

	RTE. 302 (W/O RTE. 114)	RTE. 114 (S/O RTE. 302)	RTE. 302 (E/O RTE. 114)	RTE. 302 (W/O RTE. 35)
Current (2010) AADT	10150	3220	12520	13580
Future (2030) AADT	13200	4190	16280	17650
DHV - % of AADT	11%	12%	10%	10%
Design Hour Volume	1510	491	1641	1765
% Heavy Trucks (AADT)	12%	14%	11%	10%
% Heavy Trucks (DHV)	10%	12%	9%	8%
Directional Distribution (DHV)	52%	56%	50%	55%
18 kip Equivalent P 2.0	626	218	683	683
18 kip Equivalent P 2.5	596	208	651	651
Design Speed (mph)	25	25	25	25
Functional Class:	Major Arterial	Major Collector	Major Arterial	Major Arterial

PROGRAM AREA: BRIDGE PROGRAM

SCOPE OF WORK: BRIDGE REPLACEMENT ON NEW ALIGNMENT AND HIGHWAY RECONSTRUCTION

PIN 11060.00

BH-A106(000)

STATE OF MAINE
DEPARTMENT OF TRANSPORTATION

APPROVED — DATE 7/23/10

COMMISSIONER: Bruce A. Van Note

CHIEF ENGINEER: Janet T. Sumner 7/22/10

STATE OF MAINE — ATLEE MOUSSEAU — 10415 — LICENSED PROFESSIONAL ENGINEER

SIGNATURE - HIGHWAY PROGRAM — P.E. NUMBER 10415 — DATE 7-22-2010 — SHEET 1 TO 67

STATE OF MAINE — JEFFREY S. FOLSOM — 9383 — LICENSED PROFESSIONAL ENGINEER

SIGNATURE - BRIDGE PROGRAM — P.E. NUMBER 9383 — DATE 7-22-2010 — SHEET 68 TO 141

PROJECT INFORMATION		DATE
PROGRAM	BRIDGE/HIGHWAY	
PROJECT MANAGER	J. WENTWORTH	
BRIDGE DESIGNER	J. FOLSOM	
HIGHWAY DESIGNER	A. MOUSSEAU	
PROJECT RESIDENT		
CONTRACTOR		
PROJECT COMPLETION DATE		

NAPLES
ROUTES 11\302

TITLE SHEET

SHEET NUMBER 1 OF 160

Filename: ...\00\HIGHWAY\MSTA\001_Title.dgn Username: atlee.mousseau Date:7/22/2010 Division: HIGHWAY

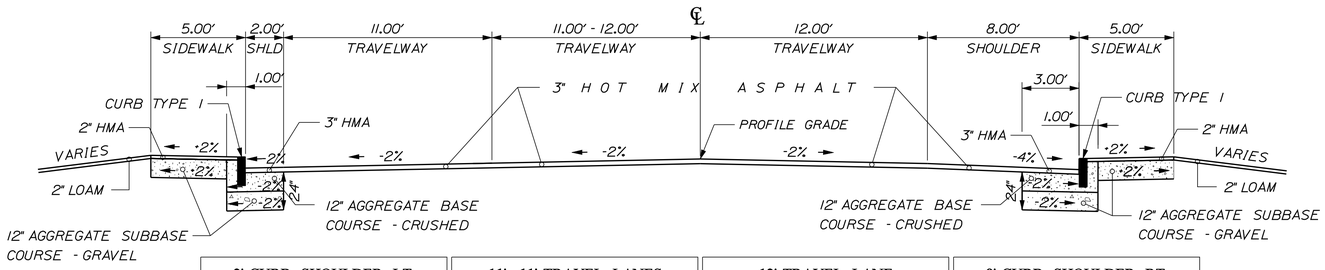

2' CURB SHOULDER LT.	11'- 11' TRAVEL LANES	12' TRAVEL LANE	8' CURB SHOULDER RT.
12" A. B. C. G. C. = 11.55 CY/100 LF 12" A. S. C. G. = 11.11 CY/100 LF			12" A. B. C. G. C. = 14.72 CY/100 LF 12" A. S. C. G. = 14.82 CY/100 LF
STATION TO STATION	STATION TO STATION	STATION TO STATION	STATION TO STATION
4+00 TO 5+00	4+00 TO 5+00	4+00 TO 8+55	4+00 TO 8+55

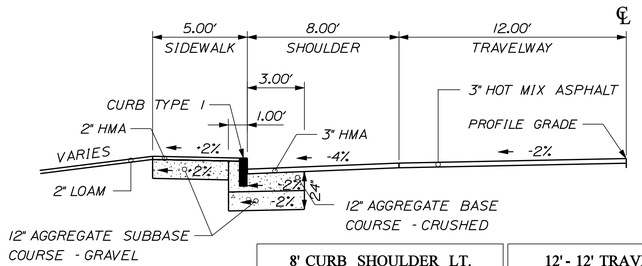

8' CURB SHOULDER LT.	12'- 12' TRAVEL LANES
12" A. B. C. G. C. = 14.73 CY/100 LF 12" A. S. C. G. = 14.85 CY/100 LF	
STATION TO STATION	STATION TO STATION
7+00 TO 8+55	7+00 TO 8+55

STATION 4+00 TO 9+00

THE CONTRACTOR SHALL REMOVE PAVEMENT SURFACE TO THE DESIGN PROFILE GRADE, WHILE ALLOWING FOR 3 INCH OVERLAY, MAINTAINING THE REQUIRED CROSS-SLOPES FOUND ON THE PLANS AND AS DIRECTED BY THE RESIDENT.

ISLAND TYPICAL (DRIVES & ENTRANCES)

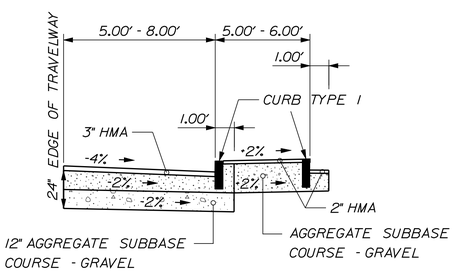

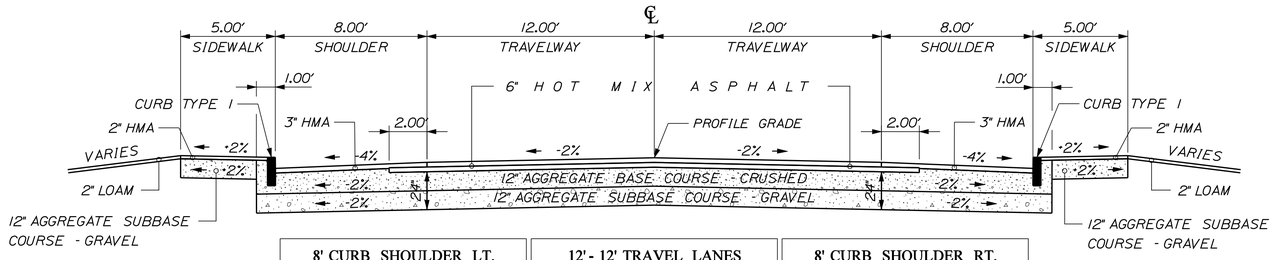

8' CURB SHOULDER LT.	12'- 12' TRAVEL LANES	8' CURB SHOULDER RT.
12" A. B. C. G. C. = 37.46 CY/100 LF 12" A. S. C. G. = 33.35 CY/100 LF	12" A. B. C. G. C. = 88.89 CY/100 LF 12" A. S. C. G. = 88.89 CY/100 LF	12" A. B. C. G. C. = 37.45 CY/100 LF 12" A. S. C. G. = 33.34 CY/100 LF
STATION TO STATION	STATION TO STATION	STATION TO STATION
8+55 TO 12+10	8+55 TO 12+79	8+55 TO 12+79

NOTES

1. THE PAVEMENT, BASE, AND SUBBASE DEPTHS AS SHOWN ON THE PLANS ARE INTENDED TO BE NOMINAL.

2. WHEN SUPERELEVATIONEXCEEDS THE SLOPE OF THE LOW SIDE SHOULDER, THE LOW SIDE SHOULDER SHALL HAVE THE SAME SLOPE AS THE TRAVELWAY.

3. CROWNS FOR BOTH NORMAL AND SUPERELEVATED SECTIONS FOR ALL COURSES OF SUBBASE AND PAVEMENT SHALL BE STRAIGHT.

4. THE GRAVEL QUANTITY CALCULATION IS BASED ON A 2" LOAM DEPTH. THE ACTUAL DEPTH MAY VARY. SEE THE GENERAL NOTES.

5. THE ALGEBRAIC DIFFERENCE BETWEEN THE SHOULDER AND TRAVELWAY CROSS SLOPES "ROLLOVER" SHALL NOT EXCEED 8%.

6. THE STATIONING SHOWN UNDER EACH TYPICAL IS APPROXIMATE.

7. SEE THE GENERAL NOTES FOR ACTUAL LOAM DEPTHS.

8. SEE THE BRIDGE PLANS AND SHEET PILE WALL PLANS FOR ALL BRIDGE AND WALL TYPICAL SECTIONS.

NOT TO SCALE

STATE OF MAINE
DEPARTMENT OF TRANSPORTATION

BH-A106(000)

PIN
11060.00

HIGHWAY PLANS

PROJ. MANAGER	BY	DATE	SIGNATURE
DESIGN-DETAILED	J. Wentworth	July 2010	------
CHECKED-REVIEWED	A. Mousseau	------	------
DESIGN2-DETAILED2	bt-tron	------	P.E. NUMBER
DESIGN3-DETAILED3	--	------	------
REVISIONS 1	------	------	DATE
REVISIONS 2	------	------	------
REVISIONS 3	------	------	------
REVISIONS 4	------	------	------
FIELD CHANGES	------	------	------

NAPLES
ROUTES 11\302

TYPICAL SECTIONS

SHEET NUMBER

2

OF 160

Filename: ...\mslo\002_Typical01.dgn Division: HIGHWAY Username: mark.poulin Date:7/22/2010

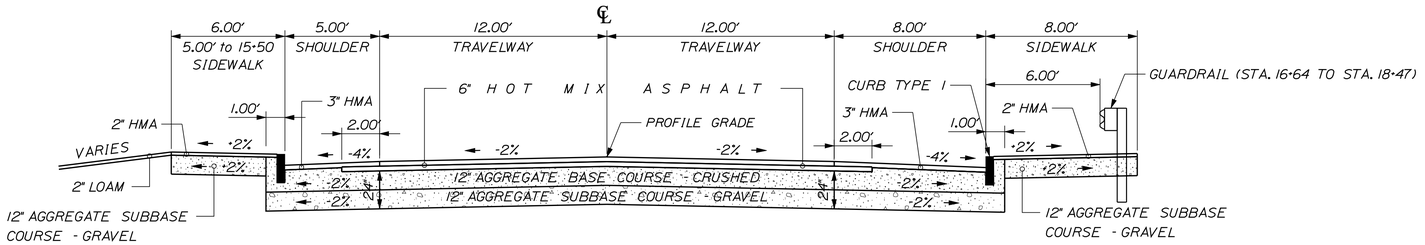

5' CURB SHOULDER LT.	12' - 12' TRAVEL LANES	8' CURB SHOULDER RT.
12" A. B. C. G. C. = 25.25 CY/100 LF 12" A. S. C. G. = 22.23 CY/100 LF	12" A. B. C. G. C. = 88.89 CY/100 LF 12" A. S. C. G. = 88.89 CY/100 LF	12" A. B. C. G. C. = 37.45 CY/100 LF 12" A. S. C. G. = 33.34 CY/100 LF
STATION TO STATION	STATION TO STATION	STATION TO STATION
12·79 TO 22·50 32·02 TO 33·89	12·79 TO 22·50 32·02 TO 33·89	12·79 TO 22·50 32·02 TO 33·89

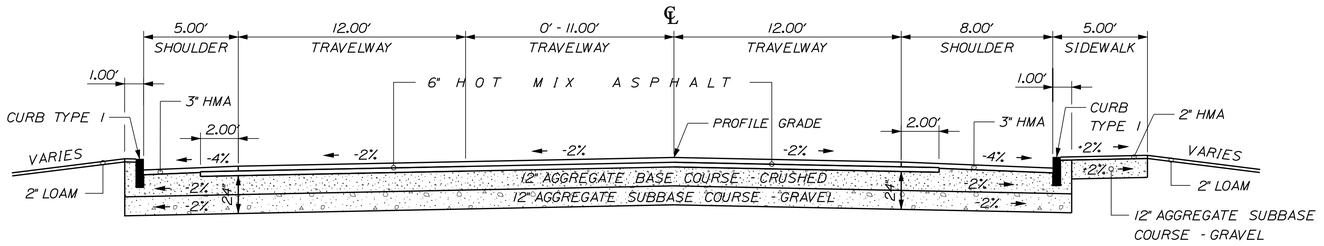

5' CURB SHOULDER LT.	12' TRAVEL LANE	0' TO 11' TRAVEL LANE	12' TRAVEL LANE	8' CURB SHOULDER RT.
12" A. B. C. G. C. = 25.23 CY/100 LF 12" A. S. C. G. = 22.23 CY/100 LF	12" A. B. C. G. C. = 44.44 CY/100 LF 12" A. S. C. G. = 44.44 CY/100 LF	12" A. B. C. G. C. = 3.70 CY/100 LF/FT 12" A. S. C. G. = 3.70 CY/100 LF/FT	12" A. B. C. G. C. = 44.44 CY/100 LF 12" A. S. C. G. = 44.44 CY/100 LF	12" A. B. C. G. C. = 37.45 CY/100 LF 12" A. S. C. G. = 33.34 CY/100 LF
STATION TO STATION	STATION TO STATION	STATION TO STATION	STATION TO STATION	STATION TO STATION
22·50 TO 25·50	22·50 TO 25·50	22·50 TO 25·50	22·50 TO 25·50	22·50 TO 25·50

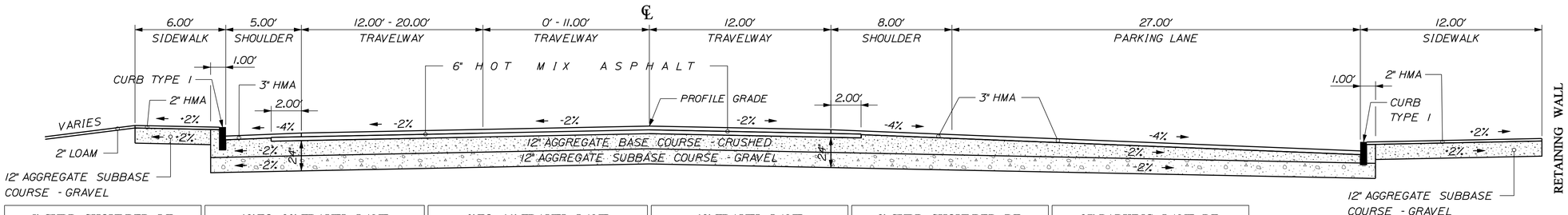

5' CURB SHOULDER LT.	12' TO 20' TRAVEL LANE	0' TO 11' TRAVEL LANE	12' TRAVEL LANE	8' CURB SHOULDER RT.	27' PARKING LANE RT.
12" A. B. C. G. C. = 25.24 CY/100 LF 12" A. S. C. G. = 22.23 CY/100 LF	12" A. B. C. G. C. = 3.70 CY/100 LF/FT 12" A. S. C. G. = 3.70 CY/100 LF/FT	12" A. B. C. G. C. = 3.70 CY/100 LF/FT 12" A. S. C. G. = 3.70 CY/100 LF/FT	12" A. B. C. G. C. = 44.44 CY/100 LF 12" A. S. C. G. = 44.44 CY/100 LF	12" A. B. C. G. C. = 32.95 CY/100 LF 12" A. S. C. G. = 29.63 CY/100 LF	12" A. B. C. G. C. = 84.66 CY/100 LF 12" A. S. C. G. = 103.73 CY/100 LF
STATION TO STATION	STATION TO STATION	STATION TO STATION	STATION TO STATION	STATION TO STATION	STATION TO STATION
25·50 TO 32·02	25·50 TO 32·02	25·50 TO 32·02	25·50 TO 32·02	25·50 TO 32·02	25·66 TO 31·86

NOTES

1. THE PAVEMENT, BASE, AND SUBBASE DEPTHS AS SHOWN ON THE PLANS ARE INTENDED TO BE NOMINAL.

2. WHEN SUPERELEVATIONEXCEEDS THE SLOPE OF THE LOW SIDE SHOULDER, THE LOW SIDE SHOULDER SHALL HAVE THE SAME SLOPE AS THE TRAVELWAY.

3. CROWNS FOR BOTH NORMAL AND SUPERELEVATED SECTIONS FOR ALL COURSES OF SUBBASE AND PAVEMENT SHALL BE STRAIGHT.

4. THE GRAVEL QUANTITY CALCULATION IS BASED ON A 2" LOAM DEPTH. THE ACTUAL DEPTH MAY VARY. SEE THE GENERAL NOTES.

5. THE ALGEBRAIC DIFFERENCE BETWEEN THE SHOULDER AND TRAVELWAY CROSS SLOPES "ROLLOVER" SHALL NOT EXCEED 8%.

6. THE STATIONING SHOWN UNDER EACH TYPICAL IS APPROXIMATE.

7. SEE THE GENERAL NOTES FOR ACTUAL LOAM DEPTHS.

8. SEE THE BRIDGE PLANS AND SHEET PILE WALL PLANS FOR ALL BRIDGE AND WALL TYPICAL SECTIONS.

ISLAND TYPICAL

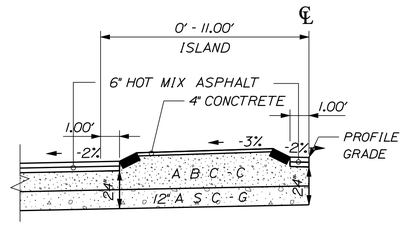

APPROXIMATE STATIONS:

STA. 24·90 TO 26·90
STA. 29·50 TO 30·05
STA. 60·42 TO 60·80

SEE GEOMETRIC SHEETS FOR ISLAND LAYOUT.

SEE LANDSCAPE PLANS FOR LOCATION OF 2' PLANTING STRIPS ON ISLANDS ON RTE 302.

CONCRETE SHALL BE STAMPED AND COLORED.

NOT TO SCALE

STATE OF MAINE
DEPARTMENT OF TRANSPORTATION

BH-A106(000)

PIN
11060.00

HIGHWAY PLANS

		BY	DATE
PROJ. MANAGER	J. Wentworth		
DESIGN-DETAILED	A. Mousseau	bt-tron	July 2010
CHECKED-REVIEWED	-----	-----	-----
DESIGN2-DETAILED2	-----	-----	-----
DESIGN3-DETAILED3	-----	-----	-----
REVISIONS 1	-----	-----	-----
REVISIONS 2	-----	-----	-----
REVISIONS 3	-----	-----	-----
REVISIONS 4	-----	-----	-----
FIELD CHANGES	-----	-----	-----

SIGNATURE

P.E. NUMBER

DATE

NAPLES
ROUTES 11 \ 302

TYPICAL SECTIONS

SHEET NUMBER

3

OF 160

Filename: ...\msta\003_Typical02.dgn Division: HIGHWAY Username: mark.poulin Date:7/22/2010

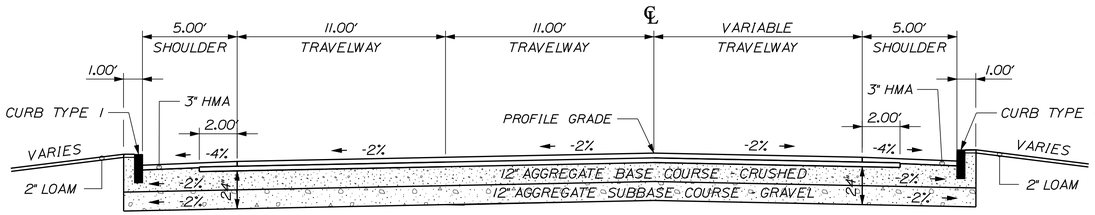

RTE. 114

5' CURB SHOULDER LT.	11' - 11' TRAVEL LANES	TRAVEL LANE	5' CURB SHOULDER RT.
12" A. B. C. G. C. = 25.56 CY/100 LF 12" A. S. C. G. = 22.22 CY/100 LF	12" A. B. C. G. C. = 81.48 CY/100 LF 12" A. S. C. G. = 81.48 CY/100 LF	12" A. B. C. G. C. = 3.70 CY/100 LF/FT 12" A. S. C. G. = 3.70 CY/100 LF/FT	12" A. B. C. G. C. = 25.62 CY/100 LF 12" A. S. C. G. = 22.23 CY/100 LF
STATION TO STATION	STATION TO STATION	STATION TO STATION	STATION TO STATION
60+30 TO 61+13	60+30 TO 61+13	25+50 TO 32+02	60+30 TO 61+13

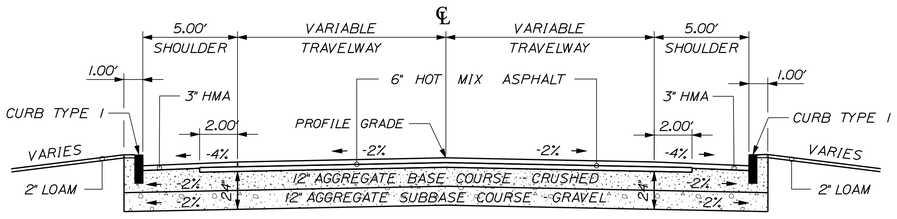

RTE. 114

5' CURB SHOULDER LT.	TRAVEL LANES	5' CURB SHOULDER RT.
12" A. B. C. G. C. = 25.26 CY/100 LF 12" A. S. C. G. = 22.22 CY/100 LF	12" A. B. C. G. C. = 3.70 CY/100 LF/FT 12" A. S. C. G. = 3.70 CY/100 LF/FT	12" A. B. C. G. C. = 25.62 CY/100 LF 12" A. S. C. G. = 22.23 CY/100 LF
STATION TO STATION	STATION TO STATION	STATION TO STATION
61+13 TO 62+50	61+13 TO 62+50	61+13 TO 62+50

LAKE HOUSE ROAD TYPICAL

4" HOT MIX ASPHALT
18" AGGREGATE SUBBASE COURSE - GRAVEL

NOTES

1. THE PAVEMENT, BASE, AND SUBBASE DEPTHS AS SHOWN ON THE PLANS ARE INTENDED TO BE NOMINAL.

2. WHEN SUPERELEVATIONEXCEEDS THE SLOPE OF THE LOW SIDE SHOULDER, THE LOW SIDE SHOULDER SHALL HAVE THE SAME SLOPE AS THE TRAVELWAY.

3. CROWNS FOR BOTH NORMAL AND SUPERELEVATED SECTIONS FOR ALL COURSES OF SUBBASE AND PAVEMENT SHALL BE STRAIGHT.

4. THE GRAVEL QUANTITY CALCULATION IS BASED ON A 2" LOAM DEPTH. THE ACTUAL DEPTH MAY VARY. SEE THE GENERAL NOTES.

5. THE ALGEBRAIC DIFFERENCE BETWEEN THE SHOULDER AND TRAVELWAY CROSS SLOPES "ROLLOVER" SHALL NOT EXCEED 8%.

6. THE STATIONING SHOWN UNDER EACH TYPICAL IS APPROXIMATE.

7. SEE THE GENERAL NOTES FOR ACTUAL LOAM DEPTHS.

8. SEE THE BRIDGE PLANS AND SHEET PILE WALL PLANS FOR ALL BRIDGE AND WALL TYPICAL SECTIONS.

NOT TO SCALE

STATE OF MAINE
DEPARTMENT OF TRANSPORTATION

BH-A106(000)

PIN
11060.00

HIGHWAY PLANS

PROJ. MANAGER	J. Wentworth	BY	DATE
DESIGN-DETAILED	A. Moussaou	bl-tron	July 2010
CHECKED-REVIEWED	-----	-----	-----
DESIGN2-DETAILED2	-----	-----	-----
DESIGN3-DETAILED3	-----	-----	-----
REVISIONS 1	-----	-----	-----
REVISIONS 2	-----	-----	-----
REVISIONS 3	-----	-----	-----
REVISIONS 4	-----	-----	-----
FIELD CHANGES	-----	-----	-----

SIGNATURE

P.E. NUMBER

DATE

NAPLES
ROUTES 11\302

TYPICAL SECTIONS

SHEET NUMBER

4

OF 160

Username: mark.poulin Date:7/22/2010
Division: HIGHWAY
Filename: ...\004_Typical03_RTE 114.dgn

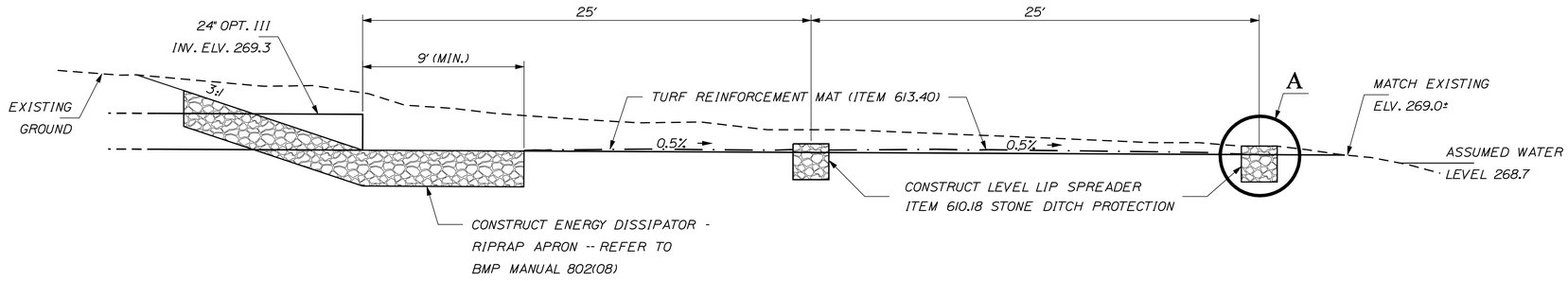

PROFILE

STA. 17+50± RT. TO STA. 18+00± RT.
N.T. S.

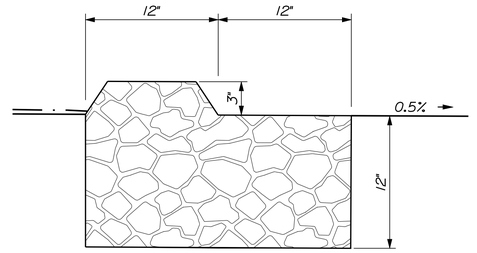

DETAIL A

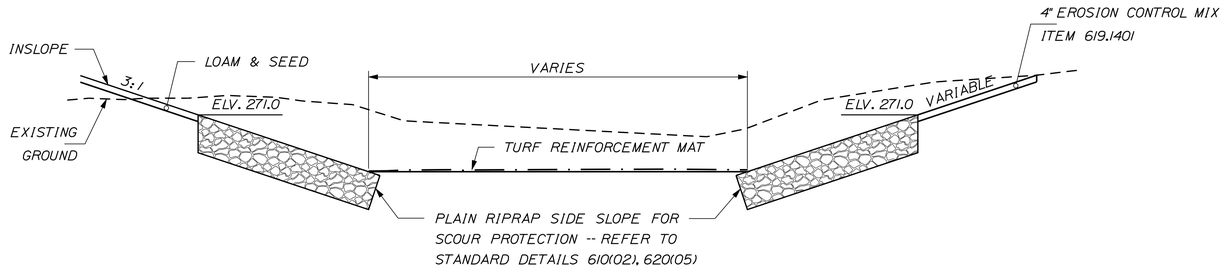

TYPICAL CROSS-SECTION

STORMWATER OUTLET STRUCTURE AT STA. 17+50± RT.
N.T. S.

NOTE :
1. APPLY TURF REINFORCEMENT MAT TO BOTTOM OF OUTLET STRUCTURE, AS DIRECTED ITEM 613.40

NOT TO SCALE

STATE OF MAINE
DEPARTMENT OF TRANSPORTATION

BH-A106(000)

PIN
11060.00

HIGHWAY PLANS

		DATE
PROJ. MANAGER	J. Wentworth	BY
DESIGN-DETAILED	A. Moussaou	bt-tron
CHECKED-REVIEWED	-----	-----
DESIGN2-DETAILED2	-----	--
DESIGN3-DETAILED3	-----	----------
REVISIONS 1	-----	-----
REVISIONS 2	-----	-----
REVISIONS 3	-----	-----
REVISIONS 4	-----	-----
FIELD CHANGES	-----	-----

SIGNATURE

P.E. NUMBER

DATE

NAPLES
ROUTES 11\302

SPECIAL DETAILS

SHEET NUMBER

5

OF 160

Username: mark.poulin Date:7/22/2010
Division: HIGHWAY
Filename: ...\mst0\005_Special Details.dgn

ESTIMATED QUANTITIES

SECTION 0001 ITEMS

Item	Item Description		Quantity	Unit
201.23	REMOVING SINGLE TREE TOP ONLY		3	EA
201.24	REMOVING STUMP		3	EA
202.15	REMOVING MANHOLE OR CATCH BASIN		23	EA
202.19	REMOVING EXISTING BRIDGE		1	LS
202.202	REMOVING PAVEMENT SURFACE		2,350	SY
203.20	COMMON EXCAVATION		14,300	CY
203.2312	HEALTH AND SAFETY PLAN PLAN		1	LS
203.2333	DISPOSAL OF SPECIAL EXCAVATION		75	T
203.24	COMMON BORROW		3,000	CY
203.25	GRANULAR BORROW		9,250	CY
206.061	STRUCTURAL EARTH EXC. - DRAINAGE AND MINOR STRUCTURES, BELOW GRADE		50	CY
206.07	STRUCTURAL ROCK EXCAVATION - DRAINAGE AND MINOR STRUCTURES		50	CY
206.082	STRUCTURAL EARTH EXCAVATION - MAJOR STRUCTURES		2,600	CY
304.09	AGGREGATE BASE COURSE - CRUSHED		6,000	CY
304.10	AGGREGATE SUBBASE COURSE - GRAVEL		9,000	CY
403.208	HOT MIX ASPHALT 12.5 MM HMA SURFACE		1,450	T
403.209	HOT MIX ASPHALT 9.5 MM HMA (SIDEWALKS, DRIVES, INCIDENTALS)		850	T
403.213	HOT MIX ASPHALT 12.5 MM BASE		3,300	T
409.15	BITUMINOUS TACK COAT - APPLIED		850	G
411.12	CRUSHED STONE SURFACE		19	T
501.231	DYNAMIC LOADING TEST		2	EA
501.50	STEEL H-BEAM PILES 89 LBS/FT, DELIVERED		3,360	LF
501.501	STEEL H-BEAM PILES 89 LBS/FT, IN PLACE		3,360	LF
501.90	PILE TIPS		64	EA
501.91	PILE SPLICES		32	EA
501.92	PILE DRIVING EQUIPMENT MOBILIZATION		1	LS
502.219	STRUCTURAL CONCRETE, ABUTMENTS AND RETAINING WALLS	1,625 CY	1	LS
502.229	STRUCTURAL CONC., ABUTMENTS/RETAINING WALLS UNDER WATER	920 CY	1	LS
502.35	STRUCTURAL CONCRETE, STAMPED COLORED CONCRETE PAVEMENT		700	SY
502.38	STRUCTURAL CONCRETE ARCH TYPE	520 CY	1	LS
502.49	STRUCTURAL CONCRETE CURBS AND SIDEWALK	51 CY	1	LS
502.56	CONCRETE FILL		100	CY
503.12	REINFORCING STEEL, FABRICATED AND DELIVERED		318,100	LB
503.13	REINFORCING STEEL, PLACING		318,100	LB
504.93	BULKHEAD	41,035 SF	1	LS
507.0834	WYOMING STEEL BRIDGE RAIL, MODIFIED	672 LF	1	LS
507.0841	STEEL PIPE HAND RAILING, TWO BAR	750 LF	1	LS
507.0841	STEEL PIPE HAND RAILING, THREE BAR	740 LF	1	LS
508.13	MEMBRANE WATERPROOFING	485 SY	1	LS
511.07	COFFERDAM: ABUTMENT NO. 2		1	LS
511.07	COFFERDAM: ABUTMENT NO. 1		1	LS
512.081	FRENCH DRAINS	603 LF	1	LS
514.06	CURING BOX FOR CONCRETE CYLINDERS		1	EA
515.20	PROTECTIVE COATING FOR CONCRETE SURFACES		320	SY
526.325	CONCRETE WALL WITH ARCHITECTURAL FINISH		303	LF
526.34	PERMANENT CONCRETE TRANSITION BARRIER		4	EA
528.08	STRUCTURAL TIMBER, 3 DOCKS		1	LS
534.10	PRECAST CONCRETE FACING	10,800 SF	1	LS
603.157	12 INCH PVC PIPE		140	LF
603.159	12 INCH CULVERT PIPE OPTION III		88	LF
603.167	15 INCH POLYVINYLCHLORIDE (PVC) PIPE		46	LF
603.169	15 INCH CULVERT PIPE OPTION III		95	LF
603.175	18 INCH REINFORCED CONCRETE PIPE CLASS III		592	LF
603.179	18 INCH CULVERT PIPE OPTION III		37	LF
603.199	24 INCH CULVERT PIPE OPTION III		64	LF
604.072	CATCH BASIN TYPE A1-C		30	EA
604.092	CATCH BASIN TYPE B1-C		1	EA
604.14	30 INCH CATCH BASIN TYPE E		4	EA
604.2413	CONCRETE SIDEWALK CULVERT		2	EA
604.244	CATCH BASIN TYPE F4		10	EA
604.246	CATCH BASIN TYPE F5		1	EA
604.248	CATCH BASIN TYPE F6		1	EA
605.09	6 INCH UNDERDRAIN TYPE B		2,334	LF
605.11	12 INCH UNDERDRAIN TYPE C		2,655	LF
605.12	15 INCH UNDERDRAIN TYPE C		618	LF
605.13	18 INCH UNDERDRAIN TYPE C		96	LF
605.15	24 INCH UNDERDRAIN TYPE C		199	LF
605.39	UNDERDRAIN DITCH SOIL FILTER		1	LS
606.1721	BRIDGE TRANSITION - TYPE 1		1	EA
606.23	GUARDRAIL TYPE 3C - SINGLE RAIL		150	LF
606.353	REFLECTORIZED FLEXIBLE GUARDRAIL MARKER		2	EA

Item	Item Description	Quantity	Unit
606.79	GUARDRAIL 350 FLARED TERMINAL	1	EA
608.08	REINFORCED CONCRETE SIDEWALK, COLORED	50	SY
608.08	REINFORCED CONCRETE SIDEWALK	1,650	SY
608.26	CURB RAMP DETECTABLE WARNING FIELD	96	SF
609.11	VERTICAL CURB TYPE 1	4,735	LF
609.12	VERTICAL CURB TYPE 1 - CIRCULAR	57	LF
609.131	VERTICAL BRIDGE CURB TYPE A	63	LF
609.234	TERMINAL CURB TYPE 1 - 4 FOOT	26	EA
609.237	TERMINAL CURB TYPE 1 - 7 FOOT	73	EA
609.34	CURB TYPE 5	335	LF
609.35	CURB TYPE 5 - CIRCULAR	68	LF
610.08	PLAIN RIPRAP	350	CY
610.16	HEAVY RIPRAP	20	CY
610.18	STONE DITCH PROTECTION	60	CY
613.319	EROSION CONTROL BLANKET	300	SY
613.40	TURF REINFORCEMENT MAT - (TRM)	100	SY
615.07	LOAM	1,300	CY
616.08	SODDING	2,500	SY
618.1301	SEEDING METHOD NUMBER 1 - PLAN QUANTITY	18	UN
618.1401	SEEDING METHOD NUMBER 2 - PLAN QUANTITY	30	UN
619.1201	MULCH - PLAN QUANTITY	48	UN
619.1401	EROSION CONTROL MIX	10	CY
620.54	STABILIZATION GEOTEXTILE	500	SY
621.053	EVERGREEN TREES (10 FOOT - 12 FOOT) GROUP B	1	EA
621.101	PLUG/ STARTER PLANT	2,400	EA
621.121	SMALL DECIDUOUS TREES (5 FOOT - 6 FOOT) GROUP B	12	EA
621.273	MEDIUM DECIDUOUS TREE (2 INCH - 2.50 INCH CALIPER) GROUP B	12	EA
621.28	LARGE DECIDUOUS TREE (2.50 INCH - 3 INCH CALIPER) GROUP B	18	EA
621.281	MEDIUM DECIDUOUS TREE (2.50 INCH - 3 INCH CALIPER) GROUP C	12	EA
621.292	LARGE DECIDUOUS TREE (3.50 INCH - 4 INCH CALIPER) GROUP B	18	EA
621.54	DECIDUOUS SHRUBS (18 INCH - 24 INCH) GROUP C	32	EA
621.541	DECIDUOUS SHRUBS (18 INCH - 24 INCH) GROUP C	138	EA
621.542	DECIDUOUS SHRUBS (18 INCH - 24 INCH) GROUP C	96	EA
621.546	DECIDUOUS SHRUBS (2 FOOT - 3 FOOT) GROUP A	60	EA
621.553	DECIDUOUS SHRUBS (3 FOOT - 4 FOOT) GROUP B	9	EA
621.558	DECIDUOUS SHRUBS (4 FOOT - 5 FOOT) GROUP A	24	EA
621.559	DECIDUOUS SHRUBS (4 FOOT - 5 FOOT) GROUP B	9	EA
621.661	VINES (18 INCH - 24 INCH) GROUP B	3	EA
621.71	HERBACEOUS PERENNIALS GROUP A, 1 GAL CONTAINER	600	EA
621.80	ESTABLISHMENT PERIOD	1	LS
626.11	PRECAST CONCRETE JUNCTION BOX	47	EA
626.221	NON-METALLIC CONDUIT CONCRETE ENCASED	4,250	LF
626.31	18 INCH FOUNDATION	21	EA
626.32	24 INCH FOUNDATION	22	EA
627.733	4 INCH WHITE OR YELLOW PAINTED PAVE MRK LINE	11,000	LF
627.75	WHITE OR YELLOW PAVEMENT AND CURB MARKING	2,200	SF
627.76	TEMPORARY PVMT. MARK LINE, W OR YELLOW	1	LS
629.05	HAND LABOR, STRAIGHT TIME	25	HR
631.12	ALL PURPOSE EXCAVATOR (INCLUDING OPERATOR)	25	HR
631.172	TRUCK - LARGE (INCLUDING OPERATOR)	25	HR
631.18	CHAIN SAW RENTAL (INCLUDING OPERATOR)	10	HR
631.20	STUMP CHIPPER (INCLUDING OPERATOR)	10	HR
631.22	FRONT END LOADER (INCLUDING OPERATOR)	25	HR
631.32	CULVERT CLEANER (INCLUDING OPERATOR)	10	HR
634.16	HIGHWAY LIGHTING	1	LS
634.70	ORNAMENTAL LIGHTING (LIGHTED BOLLARD INSTALL ONLY)	4	EA
634.70	ORNAMENTAL LIGHTING (CYCLONE LIGHTING LED INSTALL ONLY)	43	EA
638.01	EMBEDDED WORK IN STRUCTURE	1	LS
639.18	FIELD OFFICE TYPE A	1	EA
652.311	TYPE II BARRICADE	5	EA
652.312	TYPE III BARRICADE	2	EA
652.33	DRUM	25	EA
652.34	CONE	75	EA
652.35	CONSTRUCTION SIGNS	600	SF
652.361	MAINTENANCE OF TRAFFIC CONTROL DEVICES	1	LS
652.38	FLAGGER	9,000	HR
656.75	TEMPORARY SOIL EROSION AND WATER POLLUTION CONTROL	1	LS
658.20	ACRYLIC LATEX COLOR FINISH, GREEN	20	SY
659.10	MOBILIZATION	1	LS
660.21	ON-THE-JOB TRAINING (BID)	2,000	HR

SECTION 0002 OPTION NO. 1 ITEMS

Item	Item Description		Quantity	Unit
890.01	SPECIAL WORK #1	FIRE SUPRESSION SYSTEM	1	LS

STATE OF MAINE
DEPARTMENT OF TRANSPORTATION

BH-A106(000)

PIN 11060.00

HIGHWAY PLANS

	BY	DATE
PROJ. MANAGER	J. Wentworth	
DESIGN-DETAILED	A Mousseau	July 2010
CHECKED-REVIEWED	-----	-----
DESIGN2-DETAILED2	-----	-----
DESIGN3-DETAILED3	-----	-----
REVISIONS 1	-----	-----
REVISIONS 2	-----	-----
REVISIONS 3	-----	-----
REVISIONS 4	-----	-----
FIELD CHANGES	-----	-----

SIGNATURE

P.E. NUMBER

DATE

NAPLES
ROUTES 11\302

ESTIMATED QUANTITIES

SHEET NUMBER

6

OF 160

Filename: ...\highway\msto\006_Estimate.dgn Division: HIGHWAY Username: mark.poulin Date:7/27/2010

STATION	CULVERT PIPE											CATCH BASIN		PIPE ARCH				MH	UNDERDRAIN						ELBOWS, TEES, WYES AND INLET GRATE UNITS	REMARKS
	RCP			PVC		OPTION I		OPTION III SMOOTHLINED		OPTION III CORRUGATED										TYPE B		TYPE C SMOOTHLINED		TYPE C CORRUGATED			
	SIZE	LENGTH	CLASS	SIZE	LENGTH	SIZE	LENGTH	SIZE	LENGTH	SIZE	LENGTH	A1-C	B1-C		E	F	SPAN	RISE	LENGTH	GAGE OR WALL THICKNESS	TYPE B LENGTH	OUTLET LENGTH	SIZE	LENGTH	SIZE	LENGTH	DESCRIPTIONS	
STA. 4+00.00 TO CB#1 LT.																					237'							
STA. 4+00.00 TO CB#2 RT.																					237'							
STA. 6+38.50, 20.11' LT. (CB#1)												1																
STA. 6+38.50, 18.88' RT. (CB#2)												1																
CB#1 TO CB#3 LT.																							12"	258.5'	12"	258.5'		
CB#2 TO CB#4 RT.																							12"	258.5'	12"	258.5'		
STA. 9+00.00, 18.88' LT. (CB#3)												1																
STA. 9+00.00, 18.88' RT. (CB#4)												1																
CB#3 TO CB#5 LT.																							12"	297'	12"	297'		
CB#4 TO CB#6 RT.																							12"	297'	12"	297'		
STA. 12+00.00, 18.88' LT. (CB#5)												1																
STA. 12+00.00, 18.88' RT. (CB#6)												1																
STA. 12+00.00, 32.50' RT. (CB#7)																1												F5
CB#5 TO CB#8 LT.																							12"	197'	12"	197'		
CB#6 TO CB#9 RT.																							15"	197'	15"	197'		
CB#6 RT. TO CB#7 RT.								12"	11.5'	12"	11.5'																	
STA. 10+25.00 RT.																												CONCRETE SIDEWALK CULVERT, 1 EACH
STA. 11+50.00 RT.																												CONCRETE SIDEWALK CULVERT, 1 EACH
STA. 14+00.00, 15.88' LT. (CB#8)												1																
STA. 14+00.00, 18.88' RT. (CB#9)												1																
CB#8 TO CB#10 LT.																							15"	95.4'	15"	95.4'		
CB#9 TO CB#11 RT.																							18"	95.4'	18"	95.4'		
STA. 14+98.40, 15.88' LT. (CB#10)												1																
STA. 14+98.40, 18.88' RT. (CB#11)												1																
CB#10 TO CB#13 LT.																							12"	198.6'	12"	198.6'		
CB#11 TO CB#14 RT.																							24"	198.6'	24"	198.6'		
CB#10 LT. TO CB#11 RT.	18"	31.8'	III																									
STA. 16+24.30, 29.50' RT. (CB#12)																1												F4
CB#12 RT. TO STA. 16+78.34, 41.91' RT.								15"	56'	15"	56'																	
STA. 17+00.00, 15.88' LT. (CB#13)												1																
STA. 17+00.00, 18.88' RT. (CB#14)												1																
CB#13 TO STA.18+50.00 LT.																					148.5'							
CB#14 TO STA.18+50.00 RT.																					148.5'							
CB#14 RT. TO STA.17+47.50, 59.5' RT.								24"	64'	24"	64'																	
STA. 21+00.00 TO CB#15 LT.																					98.5'							
STA. 21+00.00 TO CB#16 RT.																					98.5'							
STA. 22+00.00, 15.88' LT. (CB#15)												1																
STA. 22+00.00, 18.88' RT. (CB#16)												1																
CB#15 TO CB#20 LT.																							12"	247'	12"	247'		
CB#16 TO CB#22 RT.																							12"	247'	12"	247'		
STA. 24+50.00, 43.5' RT. (CB#18)																1												F6
STA. 24+50.00, 24.68' LT. (CB#20)												1																
STA. 24+50.00, 18.88' RT. (CB#22)												1																
CB#20 LT. TO CB#22 RT.	18"	40.6'	III																									
CB#22 TO STA. 25+50.00 RT.																					98.5'							
CB#22 TO CB#18 RT.	18"	22.6'	III																									
CB#18 RT. TO STA. 24+50.00, 59' RT.	18"	14'	III																									
STA. 19+88.00, 68.36' LT. (CB#14C)															1													
STA. 19+82.50, 33.60' RT. (CB#14A)															1													
CB#14A LT. TO CB#14C RT.																							12"	101'	12"	101'		
STA. 19+87.72, 91.0' LT. TO CB#14C								15"	23.6'	15"	23.6'																	
CB#14C TO CB#14D RT.																							12"	110'	12"	110'		
CB#14A TO CB#14B LT.																							12"	115.5'	12"	115.5'		
STA. 21+00.00, 60.26' LT. (CB#14D)															1													
STA. 21+00.00, 35.78' RT. (CB#14B)															1													
CB#14B TO STA. 22+25.00 RT.																					124'							
STA. 21+10.00 TO CB#17 LT.																					93'							
STA. 21+73.70, 72.5' LT. TO CB#17 LT.								18"	37'	18"	37'																	
STA. 22+06.50, 54.00' LT. (CB#17)																1												F4
CB#17 TO CB#19 LT.																							15"	175'	15"	175'		
STA. 23+75.00, 33.5' LT. (CB#19)																1												F4
CB#19 TO CB#21 LT.																							12"	73.9'	12"	73.9'		
STA. 24+50.00, 35.0' LT. (CB#21)																1												F4
CB#21 TO CB#23 LT.																							12"	48'	12"	48'		
STA. 25+00.00, 37.00' LT. (CB#23)																1												F4
CB#23 TO CB#25 LT.																							12"	99.4'	12"	99.4'		
STA. 26+00.00, 45.72' LT. (CB#25)																1												F4
STA. 24+60.00 TO CB#24 LT.																					88.5'							
STA. 25+90.00, 26.88' LT. (CB#24)												1																
CB#24 TO CB#26 LT.																							12"	107'	12"	107'		
STA. 27+00.00, 26.88' LT. (CB#26)												1																
STA. 27+00.00, 45.88' RT. (CB#28)												1																
CB#26 LT. TO CB#28 RT.	18"	69.8'	III																									
CB#28 LT. TO STA. 27+00.00, 61' RT.	18"	13.6'	III																									

STATE OF MAINE
DEPARTMENT OF TRANSPORTATION

BH-A106(000)

PIN
11060.00

HIGHWAY PLANS

	BY	DATE
PROJ. MANAGER	J. Wentworth	
DESIGN-DETAILED	A. Mousseau	July 2010
CHECKED-REVIEWED	-----	-----
DESIGN2-DETAILED2	-----	-----
DESIGN3-DETAILED3	-----	-----
REVISIONS 1	-----	-----
REVISIONS 2	-----	-----
REVISIONS 3	-----	-----
REVISIONS 4	-----	-----
FIELD CHANGES	-----	-----

SIGNATURE

P.E. NUMBER

DATE

NAPLES
ROUTES 11\302

DRAINAGE SHEET

SHEET NUMBER
7
OF 160

Filename: ...\mst0\007_Drainage 01.dgn Division: HIGHWAY Username: mark.poulin Date:7/22/2010

STATION	CULVERT PIPE											CATCH BASIN		PIPE ARCH				MH	UNDERDRAIN						ELBOWS, TEES, WYES AND INLET GRATE UNITS	REMARKS
	RCP			PVC		OPTION I		OPTION III											TYPE B		TYPE C					
								SMOOTHLINED		CORRUGATED								GAGE OR WALL THICKNESS	TYPE B	OUTLET	SMOOTHLINED		CORRUGATED		DESCRIPTIONS	
	SIZE	LENGTH	CLASS	SIZE	LENGTH	SIZE	LENGTH	SIZE	LENGTH	SIZE	LENGTH	A1-C	B1-C		E	F	SPAN	RISE	LENGTH		LENGTH	LENGTH	SIZE	LENGTH	SIZE	LENGTH		
STA. 27+10.00 TO CB#29 LT.																					88.5'							
STA. 28+00.00, 31.14' LT. (CB#29)												1																
STA. 28+29.00, 62.00' LT. (CB#30)																1												F4
STA. 28+00.00, 45.88' RT. (CB#31)												1																
CB#29 LT. TO CB#40 (RTE. 114) LT.				12"	65.5'																							
CB#30 LT. TO CB#29 LT.								12"	45'	12"	45'																	
CB#29 LT. TO CB#31 RT.	18"	74'	III																									
CB#31 RT. TO STA. 28+00.00, 61' RT.	18"	13.6'	III																									
STA. 29+50.00, 37.70' LT. (CB#32)												1																
STA. 29+50.00, 45.88' RT.												1																
CB#32 TO STA. 30+90.00 LT.																					138.5'							
CB#32 LT. TO CB#41 (RTE. 114) RT.				15"	46'																							
CB#32 LT. TO CB#33 RT.	18"	80.6'	III																									
CB#33 RT. TO STA. 29+50.00, 61' RT.	18"	13.6'	III																									
STA. 30+82.20, 21.05' LT. (CB#34)												1																
STA. 30+82.20, 40' LT. (CB#34A)																1												F4
CB#34 TO STA. 31+90.00 LT.																					106.3'							
CB#34 LT. TO CB#35 RT.	18"	69'	III																									
CB#34A LT. TO CB#34 LT.								12"	17'	12"	17'																	
STA. 31+11.00, 45.88' RT. (CB#35)													1															
CB#35 RT. TO STA. 31+11.00, 61' RT.	18"	13.6'	III																									
STA. 31+90.00, 33.23' LT. (CB#36)																1												F4
STA. 31+96.50, 16.98' LT. (CB#37)												1																
CB#36 LT. TO CB#37 LT.								15"	15.2'	15"	15.2'																	
CB#37 TO STA. 33+75.00 LT.																					177.9'							
CB#37 LT. TO CB#38 RT.	18"	34.6'	III																									
STA. 32+10.00, 18.88' RT. (CB#38)												1																
CB#38 TO STA. 33+89.00 RT.																					177.5'							
CB#35 RT. TO CB#38 RT.	18"	100'	III																									
STA. 60+70.00 (RTE. 114), 30.04' LT. (CB#40)												1																
CB#40 TO CB#42 LT.				12"	74'																							
STA. 61+50.00 (RTE. 114), 22.47' LT. (CB#42)												1																
CB#42 TO STA. 62+50.00 LT.																					98.5'							
STA. 61+50.00 LT. TO CB#42								12"	14'	12"	14'																	
STA. 60+70.00 (RTE. 114), 39.77' RT. (CB#41)												1																
CB#41 TO CB#43 RT.																							15"	132'	15"	132'		
STA. 62+00.00 (RTE. 114), 15.61' RT. (CB#43)												1																
CB#43 TO STA. 62+20.00 RT.																							15"	18.5'	15"	18.5'		
STA. 33+93.50, 31.31' LT. (CB#39)																1												F4

Filename: ...\msto\008_Drainage 02.dgn Username: mark.poulin Date:7/22/2010
Division: HIGHWAY

STATE OF MAINE
DEPARTMENT OF TRANSPORTATION

BH-A106(000)

PIN
11060.00

HIGHWAY PLANS

	BY	DATE
PROJ. MANAGER	J. Wentworth	
DESIGN-DETAILED	A. Mousseau	July 2010
CHECKED-REVIEWED	-----	-----
DESIGN2-DETAILED2	-----	-----
DESIGN3-DETAILED3	-----	-----
REVISIONS 1	-----	-----
REVISIONS 2	-----	-----
REVISIONS 3	-----	-----
REVISIONS 4	-----	-----
FIELD CHANGES	-----	-----

SIGNATURE

P.E. NUMBER

DATE

NAPLES
ROUTES 11\302

DRAINAGE SHEET

SHEET NUMBER

8

OF 160

Filename: ...\mst\009_GeneralNotes.dgn Division: HIGHWAY Username: mark.poulin Date:7/22/2010

GENERAL NOTES

1. THE UTILITIES INVOLVED IN THIS CONTRACT ARE AS FOLLOWS:

   CENTRAL MAINE POWER COMPANY
   MAINEDOT - ELECTRICAL DEPARTMENT
   MAINE TELEPHONE COMPANY
   TIME WARNER CABLE
   TOWN OF NAPLES

2. ALL UTILITY FACILITIES SHALL BE ADJUSTED BY THE RESPECTIVE UTILITIES UNLESS OTHERWISE NOTED.

3. CLEARING LIMITS SHALL BE 5' BEYOND AND PARALLEL TO THE CONSTRUCTION SLOPE LINES OR AS SHOWN ON THE PLANS UNLESS OTHERWISE AUTHORIZED BY THE RESIDENT.

4. ALL CLEARING SHALL BE CONSIDERED INCIDENTAL TO THE CONTRACT AND NO SEPARATE PAYMENT WILL BE MADE. THE ACTUAL LINES FOR CLEARING SHALL BE ESTABLISHED IN THE FIELD BY THE CONTRACTOR AS INDICATED ON THE PLANS AND APPROVED BY THE RESIDENT.

5. STUMPS HAVE BEEN ESTIMATED TO BE REMOVED UNDER ITEM 201.24 REMOVE STUMP. HOWEVER, WHERE DIRECTED BY THE RESIDENT, ITEM 631.20 STUMP CHIPPER RENTAL, MAY BE USED TO REMOVE STUMPS.

6. GRUBBING IN FILL AREAS HAS BEEN SHOWN ON THE CROSS SECTIONS AND THE QUANTITIES NOTED. THESE LIMITS ARE APPROXIMATE AND HAVE BEEN USED FOR ESTIMATING PURPOSES ONLY. ACTUAL GRUBBING LIMITS MAY VARY BASED ON FIELD CONDITIONS AS DIRECTED BY THE RESIDENT. ESTIMATED GRUBBING DEPTHS ARE SIX INCHES IN FIELD AREAS AND TWELVE INCHES IN WOODED AREAS.

7. DRIVEWAY FILL SIDE SLOPES SHALL BE THE SAME AS THE NON-GUARDRAIL FILL SLOPES UNLESS OTHERWISE NOTED ON THE PLANS.

8. ALL WASTE MATERIAL NOT USED ON THE PROJECT SHALL BE DISPOSED OF OFF THE PROJECT IN WASTE AREAS APPROVED BY THE RESIDENT.

9. REQUIRED DITCH PROTECTION SHOWN ON THE PLANS OR IN THE CONSTRUCTION NOTES IS FOR ESTIMATING PURPOSES ONLY. THE ACTUAL TYPE AND LOCATION OF DITCH PROTECTION MAY BE ALTERED BY THE RESIDENT.

10. IF FOUNDATION MATERIAL IS REQUIRED UNDER CULVERTS, IT SHALL MEET THE REQUIREMENTS FOR GRANULAR BORROW - UNDERWATER BACKFILL AND WILL PAID FOR AS GRANULAR BORROW.

11. GRANULAR BORROW USED TO BACKFILL MUCK EXCAVATION OR IN LOW WET AREAS TO 1' ABOVE WATER LEVEL OR OLD GROUND SHALL MEET REQUIREMENTS FOR GRANULAR BORROW UNDERWATER BACKFILL.

12. RESIDENTIAL PAVED ENTRANCES SHALL BE CONSTRUCTED WITH:
    2" HOT MIX ASPHALT
    12" AGGREGATE SUBBASE COURSE GRAVEL.

13. COMMERCIAL PAVED ENTRANCES SHALL BE CONSTRUCTED WITH:
    3" HOT MIX ASPHALT
    11" AGGREGATE SUBBASE COURSE GRAVEL.

14. UNPAVED ENTRANCES SHALL BE CONSTRUCTED WITH:
    14" AGGREGATE SUBBASE COURSE GRAVEL OR
    11" AGGREGATE SUBBASE COURSE GRAVEL
    3" UNTREATED AGGREGATE SURFACE COURSE
    UNLESS OTHERWISE NOTED IN THE PLANS OR DIRECTED BY THE RESIDENT.

15. CRUSHED STONE ENTRANCES SHALL BE CONSTRUCTED WITH:
    2" CRUSHED STONE SURFACE
    12" AGGREGATE SUBBASE COURSE GRAVEL
    UNLESS OTHERWISE NOTED IN THE PLANS OR DIRECTED BY THE RESIDENT.

16. GRASSED ENTRANCES SHALL BE CONSTRUCTED WITH:
    2" LOAM, SEED & MULCH
    12" AGGREGATE SUBBASE COURSE GRAVEL
    UNLESS OTHERWISE NOTED IN THE PLANS OR DIRECTED BY THE RESIDENT.

17. A 5-6' PAVED LIP SHALL BE PLACED AT ALL GRAVEL ENTRANCES, ACCORDING TO THE SIDEWALK WIDTH, UNLESS OTHERWISE NOTED IN THE PLANS OR DIRECTED BY THE RESIDENT.

18. ALL PAVED WALKS TO BE CONSTRUCTED WITH:
    2" HOT MIX ASPHALT
    12" AGGREGATE SUBBASE COURSE-GRAVEL
    UNLESS OTHERWISE NOTED IN THE PLANS OR DIRECTED BY THE RESIDENT.

19. ALL CONCRETE WALKS TO BE CONSTRUCTED WITH:
    4" REINFORCED CONCRETE
    10" AGGREGATE SUBBASE COURSE-GRAVEL
    UNLESS OTHERWISE NOTED IN THE PLANS OR DIRECTED BY THE RESIDENT.

20. PLACE 12 INCHES GRAVEL AND 2 INCHES HOT MIX ASPHALT AROUND CATCH BASINS IN GRASSED AREAS (3' OUTSIDE OF FRAME) AND PAINT WITH ACRYLIC LATEX COLOR FINISH - GREEN. PAYMENT SHALL BE UNDER THE APPLICABLE CONTRACT ITEMS.

21. ANY NECESSARY CLEANING OF EXISTING PAVEMENT PRIOR TO PAVING SHALL BE INCIDENTAL TO THE RELATED PAVING ITEMS.

22. EXISTING CULVERTS TO REMAIN SHALL BE CLEANED AS DIRECTED BY THE RESIDENT. PAYMENT WILL BE MADE UNDER ITEM 631.32 CULVERT CLEANER (INC. OPERATOR).

23. CONNECTIONS FROM EXISTING CULVERTS OR UNDERDRAIN TO PROPOSED CULVERTS OR UNDERDRAIN SHALL BE INCIDENTAL TO RELATED DRAINAGE ITEMS.

24. WHERE INLET/OUTLET PIPES ENTER THE CATCH BASIN THROUGH THE CONE SECTION, ASSUME THAT A FLAT TOP CATCH BASIN IS NEEDED. THE CONTRACTOR SHALL CERTIFY THAT THESE BASINS MEET LOADING REQUIREMENTS.

25. NO EXISTING DRAINAGE SHALL BE ABANDONED, REMOVED OR PLUGGED WITHOUT PRIOR APPROVAL OF THE RESIDENT.

26. INLETS AND OUTLETS OF ALL CULVERTS SHALL BE RIPRAPPED UNLESS OTHERWISE NOTED ON THE PLANS OR DIRECTED BY THE RESIDENT.

27. THE CULVERT SIZES SHOWN ON THE PLANS AND CROSS SECTIONS ARE FOR SMOOTHLINED PIPES. FOR COMPARABLE CORRUGATED SIZES SEE THE DRAINAGE TABULATION.

28. ANY NECESSARY CUTTING OF EXISTING PIPES TO FIT IN AREAS OF PROPOSED CATCH BASINS WILL NOT BE PAID FOR SEPARATELY AND WILL BE CONSIDERED INCIDENTAL TO ITEM 604.

29. ANY NECESSARY CUTTING OF EXISTING CATCH BASINS TO ALLOW FOR PROPOSED PIPE CONNECTIONS WILL NOT BE PAID FOR SEPARATELY AND WILL BE CONSIDERED INCIDENTAL TO ITEM 603 OR 605.

30. EXISTING ABANDONED WATER MAINS BROKEN BY THE CONTRACTOR DURING CONSTRUCTION SHALL HAVE THE ENDS PLUGGED WITH BRICK AND MORTAR. COST FOR ALL LABOR AND MATERIAL WILL BE CONSIDERED INCIDENTAL TO THE CONTRACT AND NO DIRECT PAYMENT WILL BE MADE.

31. GUARDRAIL END TREATMENTS SHALL BE INSTALLED CONCURRENTLY WITH THE PLACEMENT OF EACH SECTION OF BEAM GUARDRAIL.

32. ALL EXISTING GUARDRAIL SHALL BE REMOVED AND BECOME THE PROPERTY OF THE CONTRACTOR. REMOVAL AND DISPOSAL SHALL BE CONSIDERED INCIDENTAL TO THE GUARDRAIL ITEMS.

33. TWO REFLECTORIZED FLEXIBLE G.R. MARKERS (ITEM 606.353) WILL BE INSTALLED AT EACH GUARDRAIL END.

34. ALL CATCH BASINS TYPE A PLACED ON CIRCULAR CURB TYPE I SHALL HAVE THE CURB INLET CUT THE SAME RADIUS AS ADJACENT CIRCULAR CURB. PAYMENT SHALL BE INCIDENTAL TO ITEM 604

35. LOAM HAS BEEN ESTIMATED FOR DISTURBED AREAS. ACTUAL PLACEMENT OF THE LOAM SHALL BE AS NOTED ON THE PLANS OR DESIGNATED BY THE RESIDENT.

36. UNLESS OTHERWISE NOTED SEEDING METHOD NO. 1 SHALL BE UTILIZED ON ALL LAWNS AND DEVELOPED AREAS; SEEDING METHOD NO. 2 SHALL BE UTILIZED ON ALL SLOPES.

37. LOAM SHALL BE PLACED TO A NOMINAL DEPTH OF 12 INCHES IN PLANTING BEDS, 6 INCHES IN SODDED AREAS, 4 INCHES IN LAWN AREAS, AND 2 INCHES IN ALL OTHER AREAS UNLESS OTHERWISE NOTED OR DIRECTED.

38. ANY BASE PAVEMENT NOT SURFACED BEFORE WINTER WILL REQUIRE TEMPORARY PAVEMENT MARKINGS OF PAINT, BOTH YELLOW CENTERLINE AND WHITE EDGE LINES AND WILL BE CONSIDERED PART OF ITEM 627.76

39. THE CONTRACTOR WILL BE RESPONSIBLE FOR MAINTAINING ALL EXISTING MAILBOXES TO ENSURE THAT THE MAIL WILL BE DELIVERABLE. NO SEPARATE PAYMENT WILL BE MADE FOR THIS WORK; IT SHALL BE CONSIDERED INCIDENTAL TO THE CONTRACT.

40. ANY DAMAGE TO THE SLOPES CAUSED BY THE CONTRACTOR'S EQUIPMENT, PERSONNEL, OR OPERATION SHALL BE REPAIRED TO THE SATISFACTION OF THE RESIDENT. ALL WORK, EQUIPMENT, AND MATERIALS REQUIRED TO MAKE REPAIRS SHALL BE AT THE CONTRACTOR'S EXPENSE.

41. AREAS REQUIRING FILL ON THE PROJECT WILL COME FROM SUITABLE EXCAVATION FROM EXCAVATION AREAS.

42. ESTIMATED QUANTITIES FOR REQUIRED STRUCTURAL EARTH EXCAVATION, DRAINAGE AND MINOR STRUCTURES ARE INFORMATIONAL ONLY AND REPRESENT THE APPROXIMATE MINIMUM QUANTITY REQUIRED TO INSTALL DRAINAGE STRUCTURES. ADDITIONAL EXCAVATION FOR THE CONTRACTOR'S CONVENIENCE OR TO COMPLY WITH BACKSLOPING REQUIREMENTS WILL NOT BE PAID FOR DIRECTLY BUT WILL BE CONSIDERED INCIDENTAL TO THE RELATED DRAINAGE ITEMS.

43. NO SEPARATE PAYMENT FOR SUPERINTENDENT OR FOREMAN WILL BE MADE FOR THE SUPERVISION OF EQUIPMENT BEING PAID FOR UNDER THE EQUIPMENT RENTAL ITEMS.

44. "UNDETERMINED LOCATIONS" SHALL BE DETERMINED BY THE RESIDENT.

45. STATIONS REFERENCED ARE APPROXIMATE.

46. ALL WORK SHALL BE DONE IN ACCORDANCE WITH THE MAINE DEPARTMENT OF TRANSPORTATION'S BEST MANAGEMENT PRACTICES FOR EROSION CONTROL & SEDIMENT CONTROL, FEBRUARY, 2008.

47. CATCH BASIN GRATE ELEVATIONS LISTED ARE AT BACK OF GRATE. CATCH BASIN OFFSETS LISTED ARE TO THE CENTER OF THE GRATE.

48. EXCEPT FOR OVERLAY AREAS, EXISTING PAVEMENT SHALL BE REMOVED THE LENGTH OF THE PROJECT. REMOVED PAVEMENT BECOMES THE PROPERTY OF THE CONTRACTOR. PAYMENT FOR REMOVAL SHALL BE UNDER COMMON EXCAVATION ITEM NO. 203.20.

49. GRANITE SLABS ALONG THE EXISTING EMBANKMENT AT BRANDY POND ARE INTENDED TO REMAIN IN PLACE. HEAVY RIPRAP SHALL BE USED BELOW ELEVATION 270.0 FT AND PLAIN RIPRAP SHALL BE USED ABOVE. THE NEED TO KEY IN THE RIPRAP WILL BE DETERMINED IN THE FIELD, AS DIRECTED BY THE RESIDENT.

50. PEDESTRIAN RAMPS AND CROSS WALKS SHALL BE A MINIMUM OF SIX FEET WIDE.

51. TYPE I CURB SHALL BE BACKFILLED WITH CONCRETE FILL, AS DIRECTED BY THE RESIDENT. PAYMENT WILL BE MADE UNDER ITEM 502.56, CONCRETE FILL.

52. HOLES CREATED BY GUARDRAIL REMOVAL WILL BE FILLED AND COMPACTED WITH APPROVED MATERIALS AS DIRECTED BY THE RESIDENT. PAYMENT WILL BE CONSIDERED INCIDENTAL TO GUARDRAIL ITEMS.

53. ACTUAL STRIPING LAYOUT WILL BE AS DIRECTED BY THE RESIDENT.

54. PARALLEL PARKING SPOTS SHALL BE AS DIRECTED BY THE RESIDENT. PARKING IS PROHIBITED WITHIN 20 FEET OF ANY CROSSWALK, 25 FEET OF THE TERMINUS OF CORNER RADIUS OF ANY STREET, 10 FEET OF ANY DRIVEWAY ENTRANCE, OR 15 FEET FROM ANY HYDRANT.

55. EROSION CONTROL GEOTEXTILE (NON-WOVEN) SHALL BE PLACED UNDER ALL RIPRAP AREAS UNLESS OTHERWISE DIRECTED BY THE RESIDENT. THIS WORK SHALL BE INCIDENTAL TO RIPRAP ITEMS.

STATE OF MAINE
DEPARTMENT OF TRANSPORTATION

BH-A106(000)

PIN 11060.00

HIGHWAY PLANS

		BY	DATE
PROJ. MANAGER	J. Wentworth		
DESIGN-DETAILED	A. Mousseau	bt-tron	July 2010
CHECKED-REVIEWED	-----	-----	-----
DESIGN2-DETAILED2	-----	-----	-----
DESIGN3-DETAILED3	-----	-----	-----
REVISIONS 1	-----	-----	-----
REVISIONS 2	-----	-----	-----
REVISIONS 3	-----	-----	-----
REVISIONS 4	-----	-----	-----
FIELD CHANGES	-----	-----	-----

SIGNATURE

P.E. NUMBER

DATE

NAPLES
ROUTES 11\302

GENERAL NOTES

SHEET NUMBER

9

OF 160

GEOTECHNICAL NOTES

GENERAL

1. THE GEOTECHNICAL REPORT FOR THE ROADWAY WORK ON THIS PROJECT , SUBSURFACE INVESTIGATION FOR RECONSTRUCTION OF ROUTE 302, NAPLES, MAINE, MAINEDOT SOILS REPORT NUMBER 2010-112, JULY, 2010, MAY BE ACCESSED AT THE FOLLOWING WEB ADDRESS:

   http://www.maine.gov/mdot/comprehensive-list-projects/project-information.php

   BRIDGE WORK IS ADDRESSED IN A SEPARATE GEOTECHNICAL REPORT.

2. GEOTECHNICAL INFORMATION FURNISHED OR REFERENCED IN THIS PLAN SET IS FOR THE BIDDERS' AND CONTRACTOR'S USE. NO ASSURANCE IS GIVEN THAT THE INFORMATION OR INTERPRETATIONS WILL BE REPRESENTATIVE OF ACTUAL SUBSURFACE CONDITIONS AT THE TIME OF CONSTRUCTION. THE DEPARTMENT SHALL NOT BE RESPONSIBLE FOR THE BIDDERS' AND CONTRACTOR'S INTERPRETATIONS OF, OR CONCLUSIONS DRAWN FROM, THE GEOTECHNICAL INFORMATION. THE BORING LOGS CONTAINED IN THE PLAN SET PRESENT INTERPRETIVE SUBSURFACE INFORMATION COLLECTED AT DISCRETE LOCATIONS. DATA PROVIDED MAY NOT BE REPRESENTATIVE OF THE SUBSURFACE CONDITIONS BETWEEN BORING LOCATIONS.

3. RIPRAP PLACED ON ANY SLOPE STEEPER THAN IV:1.5H SHALL CONSIST OF ANGULAR BLAST ROCK.

SUBGRADE

4. STABILIZATION AND REINFORCEMENT GEOTEXTILES MAY BE USED TO SUPPORT CONSTRUCTION TRAFFIC IF WET SOILS ARE ENCOUNTERED IN CUT SECTIONS. STABILIZATION AND REINFORCEMENT GEOTEXTILES SHALL BE NON-WOVEN MATERIAL MEETING THE REQUIREMENTS OF STANDARD SPECIFICATION 722 AND SUPPLEMENTAL SPECIFICATION 722.

5. ALL MUCK ENCOUNTERED DURING CONSTRUCTION SHALL BE REMOVED AND DISPOSED OF AS PER STANDARD SPECIFICATION 203.05 ROADWAY EXCAVATION.

6. GRANULAR BORROW SHALL BE USED TO BACKFILL MUCK EXCAVATION AND LOW, WET AREAS TO 1' ABOVE WATER LEVEL OR OLD GROUND. GRANULAR BORROW SHALL MEET THE REQUIREMENTS OF STANDARD SPECIFICATION 703.19 GRANULAR BORROW FOR UNDERWATER BACKFILL.

REUSE OF SOILS

7. EXCAVATED EXISTING SUBBASE AGGREGATE MAY NOT BE REUSED IN BASE OR SUBBASE AGGREGATE FOR NEW CONSTRUCTION ON THIS PROJECT. IT MAY BE USED AS FILL BELOW SUBGRADE ELEVATION.

8. EXCAVATED CLAY-SILT SOILS MAY NOT BE REUSED ON THIS PROJECT EXCEPT TO DRESS SIDE-SLOPES BELOW THE BOTTOM ELEVATION OF THE SHOULDER SUBGRADE.

9. MARINE SILTY SAND AND GLACIAL TILL MAY BE REUSED ON THIS PROJECT AS COMMON BORROW IN ACCORDANCE WITH SECTIONS 203 AND 703. MOISTURE CONDITIONING MAY BE REQUIRED TO REDUCE THE MOISTURE CONTENT OF EXCAVATED MATERIAL BEFORE REUSE ON THE PROJECT. LABOR AND EQUIPMENT REQUIRED FOR MOISTURE CONDITIONING WILL BE PAID UNDER APPROPRIATE HOURLY LABOR AND EQUIPMENT RENTAL ITEMS.

EARTHWORK SUMMARY

COMMON EXCAVATION FOR ESTIMATE

COMMON EXCAVATION (FROM CROSS SECTIONS)	11,377	
EARTH FROM DRIVES, OLD ROAD, ETC.	2,036	
GRUBBING IN FILL	233	
LOAM SALVAGE IN FILL	0	
UNDERCUT	0	
MUCK EXCAVATION	0	
CULVERT INLET AND OUTLET DITCHES	0	
PAVEMENT SALVAGE IN FILL	596	
TOTAL COMMON EXCAVATION		14,242

FILL FOR BORROW CALCULATIONS

COMMON FILL (FROM CROSS SECTIONS)	7,119	
FILL FOR DRIVES	69	
GRUBBING IN FILL	233	
LOAM SALVAGE IN FILL	0	
UNDERCUT	0	
MUCK EXCAVATION	0	
PAVEMENT SALVAGE IN FILL	596	
TOTAL FILL		8,017

ROCK EXCAVATION FOR ESTIMATE

ROCK EXCAVATION (FROM CROSS SECTIONS)	0	
ROCK EXCAVATION (BOULDERS)	0	
TOTAL ROCK EXCAVATION		0

AVAILABLE COMMON EXCAVATION FOR BORROW CALCULATIONS

(1) TOTAL COMMON EXCAVATION		14,242
DEDUCTIONS:		
GRUBBING IN CUT	356	
GRUBBING IN FILL	233	
LOAM SALVAGE IN CUT	0	
LOAM SALVAGE IN FILL	0	
UNDERCUT	0	
MUCK EXCAVATION	0	
PAVEMENT SALVAGE (CUT & FILL)	1,949	
(2) TOTAL DEDUCTIONS		2,538
TOTAL AVAILABLE COMMON EXCAVATION (1) MINUS (2)		11,704
TOTAL AVAILABLE STRUCT. EXCAVATIONS (USUALLY UNDERDRAIN ONLY)		1,967
TOTAL AVAILABLE NON-ROCK EXCAVATION		13,671

COMPUTATION OF WASTE MATERIAL

GRUBBING IN CUT	356	
GRUBBING IN FILL	233	
TOTAL WASTE MATERIAL TO BE WASTED		589

COMPUTATION FOR COMMON BORROW FOR ESTIMATE

(3)TOTAL FILL			8,017
TOTAL AVAIL. NON-ROCK EXCAV.	13,671 x 0.85 =	11,620	
TOTAL AVAIL. ROCK EXCAV.	0 x 1.33 =	0	
TOTAL AVAIL. STR. ROCK EXCAV.	0 x 1.33 =	0	
(4)TOTAL AVAILABLE EXCAVATION		=	11,620
SURPLUS AVAILABLE EXCAVATION = TOTAL AVAILABLE EXCAVATION MINUS TOTAL FILL			3,603
TOTAL SURPLUS MATERIAL = SURPLUS AVAILABLE EXCAVATION PLUS TOTAL WASTE MATERIAL TO BE WASTED			4,192

SURPLUS MATERIAL = 4192 CY

STATE OF MAINE
DEPARTMENT OF TRANSPORTATION

BH-A106(000)

PIN 11060.00

HIGHWAY PLANS

PROJ. MANAGER	J. Wentworth	BY	
DESIGN-DETAILED	A. Mousseau	bt-tron	JUN 2010
CHECKED-REVIEWED	-----	-----	-----
DESIGN2-DETAILED2	-----	--	-----
DESIGN3-DETAILED3	-----	----------	-----
REVISIONS 1	-----	-----	-----
REVISIONS 2	-----	-----	-----
REVISIONS 3	-----	-----	-----
REVISIONS 4	-----	-----	-----
FIELD CHANGES	-----	-----	-----

SIGNATURE

P.E. NUMBER

DATE

NAPLES
ROUTES 11\302

GEOTECHNICAL NOTES
EARTHWORK SUMMARY

SHEET NUMBER

10

OF 160

Filename: ...\010_GeotechnicalNotes.dgn Division: HIGHWAY Username: mark.poulin Date:7/27/2010

Filename: ...\msta\011_BORING LOGS H1.dgn Division: HIGHWAY Username: mark.poulin Date:7/22/2010

Maine Department of Transportation
Soil/Rock Exploration Log
US CUSTOMARY UNITS

Project: Approaches to Naples Bay Bridge Routes 11 & 302
Location: Naples, Maine

Boring No.: HB-NAPL-101 PIN: 11060.00

Driller:	MaineDOT	Elevation (ft.)	305.9	Auger ID/OD:	5" Dia.
Operator:	Giguere/Giles	Datum:	NAVD88	Sampler:	Standard Split Spoon
Logged By:	B. Wilder	Rig Type:	CME 45C	Hammer Wt./Fall:	140#/30"
Date Start/Finish:	2/11/10-2/11/10	Drilling Method:	Solid Stem Auger	Core Barrel:	N/A
Boring Location:	6+00, 8.0 Lt.	Casing ID/OD:	N/A	Water Level*:	None Observed
Hammer Efficiency Factor: 0.84		Hammer Type:	Automatic ☒ Hydraulic ☐ Rope & Cathead ☐		

Definitions:
D = Split Spoon Sample
MD = Unsuccessful Split Spoon Sample attempt
U = Thin Wall Tube Sample
MU = Unsuccessful Thin Wall Tube Sample attempt
V = Insitu Vane Shear Test, PP = Pocket Penetrometer
MV = Unsuccessful Insitu Vane Shear Test attempt
R = Rock Core Sample
SSA = Solid Stem Auger
HSA = Hollow Stem Auger
RC = Roller Cone
WOH = weight of 140lb. hammer
WOR/C = weight of rods or casing
WO1P = Weight of one person
S_u = Insitu Field Vane Shear Strength (psf)
T_v = Pocket Torvane Shear Strength (psf)
q_p = Unconfined Compressive Strength (ksf)
N-uncorrected = Raw field SPT N-value
Hammer Efficiency Factor = Annual Calibration Value
N_{60} = SPT N-uncorrected corrected for hammer efficiency
N_{60} = (Hammer Efficiency Factor/60%)*N-uncorrected
$S_{u(lab)}$ = Lab Vane Shear Strength (psf)
WC = water content, percent
LL = Liquid Limit
PL = Plastic Limit
PI = Plasticity Index
G = Grain Size Analysis
C = Consolidation Test

Depth (ft.)	Sample No.	Pen./Rec. (in.)	Sample Depth (ft.)	Blows (/6 in.) Shear Strength (psf) or RQD (%)	N-uncorrected	N_{60}	Casing Blows	Elevation (ft.)	Graphic Log	Visual Description and Remarks	Laboratory Testing Results/ AASHTO and Unified Class
0							SSA			PAVEMENT. 0.35	
	1D	16.8/16	1.00 - 2.40	18/37/50(4.8")	---					Brown, dry, very dense, gravelly, fine to coarse SAND. 2.60	
										Bottom of Exploration at 2.60 feet below ground surface. AUGER REFUSAL	

Remarks:
All offsets are from Proposed Alignment.

Stratification lines represent approximate boundaries between soil types; transitions may be gradual.
* Water level readings have been made at times and under conditions stated. Groundwater fluctuations may occur due to conditions other than those present at the time measurements were made.

Page 1 of 1 Boring No.: HB-NAPL-101

Maine Department of Transportation
Soil/Rock Exploration Log
US CUSTOMARY UNITS

Project: Approaches to Naples Bay Bridge Routes 11 & 302
Location: Naples, Maine

Boring No.: HB-NAPL-102 PIN: 11060.00

Driller:	MaineDOT	Elevation (ft.)	294.4	Auger ID/OD:	5" Dia.
Operator:	Giguere/Giles	Datum:	NAVD88	Sampler:	Standard Split Spoon
Logged By:	B. Wilder	Rig Type:	CME 45C	Hammer Wt./Fall:	140#/30"
Date Start/Finish:	2/11/10-2/11/10	Drilling Method:	Solid Stem Auger	Core Barrel:	N/A
Boring Location:	9+50, 9.0 Rt.	Casing ID/OD:	N/A	Water Level*:	None Observed
Hammer Efficiency Factor: 0.84		Hammer Type:	Automatic ☒ Hydraulic ☐ Rope & Cathead ☐		

Definitions:
D = Split Spoon Sample
MD = Unsuccessful Split Spoon Sample attempt
U = Thin Wall Tube Sample
MU = Unsuccessful Thin Wall Tube Sample attempt
V = Insitu Vane Shear Test, PP = Pocket Penetrometer
MV = Unsuccessful Insitu Vane Shear Test attempt
R = Rock Core Sample
SSA = Solid Stem Auger
HSA = Hollow Stem Auger
RC = Roller Cone
WOH = weight of 140lb. hammer
WOR/C = weight of rods or casing
WO1P = Weight of one person
S_u = Insitu Field Vane Shear Strength (psf)
T_v = Pocket Torvane Shear Strength (psf)
q_p = Unconfined Compressive Strength (ksf)
N-uncorrected = Raw field SPT N-value
Hammer Efficiency Factor = Annual Calibration Value
N_{60} = SPT N-uncorrected corrected for hammer efficiency
N_{60} = (Hammer Efficiency Factor/60%)*N-uncorrected
$S_{u(lab)}$ = Lab Vane Shear Strength (psf)
WC = water content, percent
LL = Liquid Limit
PL = Plastic Limit
PI = Plasticity Index
G = Grain Size Analysis
C = Consolidation Test

Depth (ft.)	Sample No.	Pen./Rec. (in.)	Sample Depth (ft.)	Blows (/6 in.) Shear Strength (psf) or RQD (%)	N-uncorrected	N_{60}	Casing Blows	Elevation (ft.)	Graphic Log	Visual Description and Remarks	Laboratory Testing Results/ AASHTO and Unified Class
0							SSA	294.00		PAVEMENT. 0.40	
	1D	24/18	1.00 - 3.00	28/28/31/32	59	83		290.90		Brown, damp, very dense fine to coarse SAND, some gravel, little silt. 3.50	G#238179 A-1-b, SM WC=3.7%
5	2D	24/20	5.00 - 7.00	9/8/11/12	19	27		287.40		Light brown, damp, medium dense, fine to medium SAND, some silt, trace gravel. 7.00	G#238178 A-2-4, SM WC=9.4%
										Bottom of Exploration at 7.00 feet below ground surface. NO REFUSAL	

Remarks:
All offsets are from Proposed Alignment.

Stratification lines represent approximate boundaries between soil types; transitions may be gradual.
* Water level readings have been made at times and under conditions stated. Groundwater fluctuations may occur due to conditions other than those present at the time measurements were made.

Page 1 of 1 Boring No.: HB-NAPL-102

Maine Department of Transportation
Soil/Rock Exploration Log
US CUSTOMARY UNITS

Project: Approaches to Naples Bay Bridge Routes 11 & 302
Location: Naples, Maine

Boring No.: HB-NAPL-103 PIN: 11060.00

Driller:	MaineDOT	Elevation (ft.)	284.9	Auger ID/OD:	5" Dia.
Operator:	Giguere/Giles	Datum:	NAVD88	Sampler:	Standard Split Spoon
Logged By:	B. Wilder	Rig Type:	CME 45C	Hammer Wt./Fall:	140#/30"
Date Start/Finish:	2/11/10-2/11/10	Drilling Method:	Solid Stem Auger	Core Barrel:	N/A
Boring Location:	12+00, 6.0 Lt.	Casing ID/OD:	N/A	Water Level*:	5.8' bgs.
Hammer Efficiency Factor: 0.84		Hammer Type:	Automatic ☒ Hydraulic ☐ Rope & Cathead ☐		

Definitions:
D = Split Spoon Sample
MD = Unsuccessful Split Spoon Sample attempt
U = Thin Wall Tube Sample
MU = Unsuccessful Thin Wall Tube Sample attempt
V = Insitu Vane Shear Test, PP = Pocket Penetrometer
MV = Unsuccessful Insitu Vane Shear Test attempt
R = Rock Core Sample
SSA = Solid Stem Auger
HSA = Hollow Stem Auger
RC = Roller Cone
WOH = weight of 140lb. hammer
WOR/C = weight of rods or casing
WO1P = Weight of one person
S_u = Insitu Field Vane Shear Strength (psf)
T_v = Pocket Torvane Shear Strength (psf)
q_p = Unconfined Compressive Strength (ksf)
N-uncorrected = Raw field SPT N-value
Hammer Efficiency Factor = Annual Calibration Value
N_{60} = SPT N-uncorrected corrected for hammer efficiency
N_{60} = (Hammer Efficiency Factor/60%)*N-uncorrected
$S_{u(lab)}$ = Lab Vane Shear Strength (psf)
WC = water content, percent
LL = Liquid Limit
PL = Plastic Limit
PI = Plasticity Index
G = Grain Size Analysis
C = Consolidation Test

Depth (ft.)	Sample No.	Pen./Rec. (in.)	Sample Depth (ft.)	Blows (/6 in.) Shear Strength (psf) or RQD (%)	N-uncorrected	N_{60}	Casing Blows	Elevation (ft.)	Graphic Log	Visual Description and Remarks	Laboratory Testing Results/ AASHTO and Unified Class
0							SSA	284.50		PAVEMENT. 0.40	
	1D	24/19	1.00 - 3.00	32/41/28/16	69	97		281.40		Light brown, damp, very dense, gravelly, fine to coarse SAND, trace silt. 3.50	
5	2D	24/16	5.00 - 7.00	1/2/2/5	4	6		277.90		Brown, wet, loose, fine to coarse SAND, trace gravel, trace silt. 7.00	G#238181 A-1-b, SP WC=23.1%
										Bottom of Exploration at 7.00 feet below ground surface. NO REFUSAL	

Remarks:
All offsets are from Proposed Alignment.

Stratification lines represent approximate boundaries between soil types; transitions may be gradual.
* Water level readings have been made at times and under conditions stated. Groundwater fluctuations may occur due to conditions other than those present at the time measurements were made.

Page 1 of 1 Boring No.: HB-NAPL-103

Maine Department of Transportation
Soil/Rock Exploration Log
US CUSTOMARY UNITS

Project: Approaches to Naples Bay Bridge Routes 11 & 302
Location: Naples, Maine

Boring No.: HB-NAPL-104 PIN: 11060.00

Driller:	MaineDOT	Elevation (ft.)	277.4	Auger ID/OD:	5" Dia.
Operator:	Giguere/Giles	Datum:	NAVD88	Sampler:	Standard Split Spoon
Logged By:	B. Wilder	Rig Type:	CME 45C	Hammer Wt./Fall:	140#/30"
Date Start/Finish:	2/11/10-2/11/10	Drilling Method:	Solid Stem Auger	Core Barrel:	N/A
Boring Location:	15+00, 2.8 Rt.	Casing ID/OD:	N/A	Water Level*:	None Observed
Hammer Efficiency Factor: 0.84		Hammer Type:	Automatic ☒ Hydraulic ☐ Rope & Cathead ☐		

Definitions:
D = Split Spoon Sample
MD = Unsuccessful Split Spoon Sample attempt
U = Thin Wall Tube Sample
MU = Unsuccessful Thin Wall Tube Sample attempt
V = Insitu Vane Shear Test, PP = Pocket Penetrometer
MV = Unsuccessful Insitu Vane Shear Test attempt
R = Rock Core Sample
SSA = Solid Stem Auger
HSA = Hollow Stem Auger
RC = Roller Cone
WOH = weight of 140lb. hammer
WOR/C = weight of rods or casing
WO1P = Weight of one person
S_u = Insitu Field Vane Shear Strength (psf)
T_v = Pocket Torvane Shear Strength (psf)
q_p = Unconfined Compressive Strength (ksf)
N-uncorrected = Raw field SPT N-value
Hammer Efficiency Factor = Annual Calibration Value
N_{60} = SPT N-uncorrected corrected for hammer efficiency
N_{60} = (Hammer Efficiency Factor/60%)*N-uncorrected
$S_{u(lab)}$ = Lab Vane Shear Strength (psf)
WC = water content, percent
LL = Liquid Limit
PL = Plastic Limit
PI = Plasticity Index
G = Grain Size Analysis
C = Consolidation Test

Depth (ft.)	Sample No.	Pen./Rec. (in.)	Sample Depth (ft.)	Blows (/6 in.) Shear Strength (psf) or RQD (%)	N-uncorrected	N_{60}	Casing Blows	Elevation (ft.)	Graphic Log	Visual Description and Remarks	Laboratory Testing Results/ AASHTO and Unified Class
0							SSA	277.05		PAVEMENT. 0.35	
	1D	24/20	1.00 - 3.00	30/32/15/24	47	66		274.40		Brown, damp, dense, gravelly, fine to coarse SAND, trace silt. 3.00	
5	2D	24/18	5.00 - 7.00	30/18/13/37	31	43		270.40		Light brown, moist, dense, fine to coarse SAND, some silt, little gravel. 7.00	G#238176 A-1-b, SM WC=8.8%
										Bottom of Exploration at 7.00 feet below ground surface. NO REFUSAL	

Remarks:
All offsets are from Proposed Alignment.

Stratification lines represent approximate boundaries between soil types; transitions may be gradual.
* Water level readings have been made at times and under conditions stated. Groundwater fluctuations may occur due to conditions other than those present at the time measurements were made.

Page 1 of 1 Boring No.: HB-NAPL-104

Maine Department of Transportation
Soil/Rock Exploration Log
US CUSTOMARY UNITS

Project: Approaches to Naples Bay Bridge Routes 11 & 302
Location: Naples, Maine

Boring No.: HB-NAPL-105 PIN: 11060.00

Driller:	MaineDOT	Elevation (ft.)	277.1	Auger ID/OD:	5" Dia.
Operator:	Giguere/Giles	Datum:	NAVD88	Sampler:	Standard Split Spoon
Logged By:	B. Wilder	Rig Type:	CME 45C	Hammer Wt./Fall:	140#/30"
Date Start/Finish:	2/11/10-2/11/10	Drilling Method:	Solid Stem Auger	Core Barrel:	N/A
Boring Location:	18+00, 24.6 Lt.	Casing ID/OD:	N/A	Water Level*:	None Observed
Hammer Efficiency Factor: 0.84		Hammer Type:	Automatic ☒ Hydraulic ☐ Rope & Cathead ☐		

Definitions:
D = Split Spoon Sample
MD = Unsuccessful Split Spoon Sample attempt
U = Thin Wall Tube Sample
MU = Unsuccessful Thin Wall Tube Sample attempt
V = Insitu Vane Shear Test, PP = Pocket Penetrometer
MV = Unsuccessful Insitu Vane Shear Test attempt
R = Rock Core Sample
SSA = Solid Stem Auger
HSA = Hollow Stem Auger
RC = Roller Cone
WOH = weight of 140lb. hammer
WOR/C = weight of rods or casing
WO1P = Weight of one person
S_u = Insitu Field Vane Shear Strength (psf)
T_v = Pocket Torvane Shear Strength (psf)
q_p = Unconfined Compressive Strength (ksf)
N-uncorrected = Raw field SPT N-value
Hammer Efficiency Factor = Annual Calibration Value
N_{60} = SPT N-uncorrected corrected for hammer efficiency
N_{60} = (Hammer Efficiency Factor/60%)*N-uncorrected
$S_{u(lab)}$ = Lab Vane Shear Strength (psf)
WC = water content, percent
LL = Liquid Limit
PL = Plastic Limit
PI = Plasticity Index
G = Grain Size Analysis
C = Consolidation Test

Depth (ft.)	Sample No.	Pen./Rec. (in.)	Sample Depth (ft.)	Blows (/6 in.) Shear Strength (psf) or RQD (%)	N-uncorrected	N_{60}	Casing Blows	Elevation (ft.)	Graphic Log	Visual Description and Remarks	Laboratory Testing Results/ AASHTO and Unified Class
0							SSA	276.70		PAVEMENT. 0.40	
	1D	4.8/4.8	1.00 - 1.40	50(4.8")	---			273.60		Brown, damp, very dense, (FROST) gravelly, fine to coarse SAND, trace silt. 3.50	
5	2D	24/19	5.00 - 7.00	8/8/5/2	13	18				Brown, moist, medium dense, fine to coarse silty SAND, trace gravel.	G#238174 A-4, SM WC=16.3%
10	3D	24/16	10.00 - 12.00	3/4/2/4	6	8		265.10		Similar to above, except loose. 12.00	
										Bottom of Exploration at 12.00 feet below ground surface. NO REFUSAL	

Remarks:
All offsets are from Proposed Alignment.

Stratification lines represent approximate boundaries between soil types; transitions may be gradual.
* Water level readings have been made at times and under conditions stated. Groundwater fluctuations may occur due to conditions other than those present at the time measurements were made.

Page 1 of 1 Boring No.: HB-NAPL-105

Maine Department of Transportation
Soil/Rock Exploration Log
US CUSTOMARY UNITS

Project: Approaches to Naples Bay Bridge Routes 11 & 302
Location: Naples, Maine

Boring No.: HB-NAPL-106 PIN: 11060.00

Driller:	MaineDOT	Elevation (ft.)	272.0	Auger ID/OD:	5" Dia.
Operator:	Giguere/Giles	Datum:	NAVD88	Sampler:	Standard Split Spoon
Logged By:	B. Wilder	Rig Type:	CME 45C	Hammer Wt./Fall:	140#/30"
Date Start/Finish:	2/11/10-2/11/10	Drilling Method:	Solid Stem Auger	Core Barrel:	N/A
Boring Location:	22+00, 4.0 Lt.	Casing ID/OD:	N/A	Water Level*:	None Observed
Hammer Efficiency Factor: 0.84		Hammer Type:	Automatic ☒ Hydraulic ☐ Rope & Cathead ☐		

Definitions:
D = Split Spoon Sample
MD = Unsuccessful Split Spoon Sample attempt
U = Thin Wall Tube Sample
MU = Unsuccessful Thin Wall Tube Sample attempt
V = Insitu Vane Shear Test, PP = Pocket Penetrometer
MV = Unsuccessful Insitu Vane Shear Test attempt
R = Rock Core Sample
SSA = Solid Stem Auger
HSA = Hollow Stem Auger
RC = Roller Cone
WOH = weight of 140lb. hammer
WOR/C = weight of rods or casing
WO1P = Weight of one person
S_u = Insitu Field Vane Shear Strength (psf)
T_v = Pocket Torvane Shear Strength (psf)
q_p = Unconfined Compressive Strength (ksf)
N-uncorrected = Raw field SPT N-value
Hammer Efficiency Factor = Annual Calibration Value
N_{60} = SPT N-uncorrected corrected for hammer efficiency
N_{60} = (Hammer Efficiency Factor/60%)*N-uncorrected
$S_{u(lab)}$ = Lab Vane Shear Strength (psf)
WC = water content, percent
LL = Liquid Limit
PL = Plastic Limit
PI = Plasticity Index
G = Grain Size Analysis
C = Consolidation Test

Depth (ft.)	Sample No.	Pen./Rec. (in.)	Sample Depth (ft.)	Blows (/6 in.) Shear Strength (psf) or RQD (%)	N-uncorrected	N_{60}	Casing Blows	Elevation (ft.)	Graphic Log	Visual Description and Remarks	Laboratory Testing Results/ AASHTO and Unified Class
0							SSA	271.60		PAVEMENT. 0.40	
	1D	12/12	1.00 - 2.00	23/60	---					Brown, damp, very dense, (FROST) gravelly, fine to coarse SAND, trace silt, (Fill).	
5	2D	24/14	5.00 - 7.00	16/22/28/28	50	70		263.80		Similar to above, (Fill). 8.20	
										Bottom of Exploration at 8.20 feet below ground surface. AUGER REFUSAL, Boulder or Granite Block	

Remarks:
All offsets are from Proposed Alignment.
Bridge Boring 50-80' south went to 80' before hitting Bedrock.

Stratification lines represent approximate boundaries between soil types; transitions may be gradual.
* Water level readings have been made at times and under conditions stated. Groundwater fluctuations may occur due to conditions other than those present at the time measurements were made.

Page 1 of 1 Boring No.: HB-NAPL-106

Maine Department of Transportation
Soil/Rock Exploration Log
US CUSTOMARY UNITS

Project: Approaches to Naples Bay Bridge Routes 11 & 302
Location: Naples, Maine

Boring No.: HB-NAPL-107 PIN: 11060.00

Driller:	MaineDOT	Elevation (ft.)	272.2	Auger ID/OD:	5" Dia.
Operator:	Giguere/Giles	Datum:	NAVD88	Sampler:	Standard Split Spoon
Logged By:	B. Wilder	Rig Type:	CME 45C	Hammer Wt./Fall:	140#/30"
Date Start/Finish:	2/11/10-2/11/10	Drilling Method:	Solid Stem Auger	Core Barrel:	N/A
Boring Location:	25+00, 12.7 Lt.	Casing ID/OD:	N/A	Water Level*:	None Observed
Hammer Efficiency Factor: 0.84		Hammer Type:	Automatic ☒ Hydraulic ☐ Rope & Cathead ☐		

Definitions:
D = Split Spoon Sample
MD = Unsuccessful Split Spoon Sample attempt
U = Thin Wall Tube Sample
MU = Unsuccessful Thin Wall Tube Sample attempt
V = Insitu Vane Shear Test, PP = Pocket Penetrometer
MV = Unsuccessful Insitu Vane Shear Test attempt
R = Rock Core Sample
SSA = Solid Stem Auger
HSA = Hollow Stem Auger
RC = Roller Cone
WOH = weight of 140lb. hammer
WOR/C = weight of rods or casing
WO1P = Weight of one person
S_u = Insitu Field Vane Shear Strength (psf)
T_v = Pocket Torvane Shear Strength (psf)
q_p = Unconfined Compressive Strength (ksf)
N-uncorrected = Raw field SPT N-value
Hammer Efficiency Factor = Annual Calibration Value
N_{60} = SPT N-uncorrected corrected for hammer efficiency
N_{60} = (Hammer Efficiency Factor/60%)*N-uncorrected
$S_{u(lab)}$ = Lab Vane Shear Strength (psf)
WC = water content, percent
LL = Liquid Limit
PL = Plastic Limit
PI = Plasticity Index
G = Grain Size Analysis
C = Consolidation Test

Depth (ft.)	Sample No.	Pen./Rec. (in.)	Sample Depth (ft.)	Blows (/6 in.) Shear Strength (psf) or RQD (%)	N-uncorrected	N_{60}	Casing Blows	Elevation (ft.)	Graphic Log	Visual Description and Remarks	Laboratory Testing Results/ AASHTO and Unified Class
0							SSA	271.80		PAVEMENT. 0.40	
	1D	6/6	1.00 - 1.50	50	---					Brown, damp, very dense, (FROST) gravelly, fine to coarse SAND, little gravel, trace silt.	
5	2D	18/13	5.00 - 6.50	14/10/50	60	84		265.70		Similar to above. 6.50	G#238173 A-1-b, SW-SM WC=11.0%
										Bottom of Exploration at 6.50 feet below ground surface. AUGER REFUSAL, Boulder ?	

Remarks:
All offsets are from Proposed Alignment.

Stratification lines represent approximate boundaries between soil types; transitions may be gradual.
* Water level readings have been made at times and under conditions stated. Groundwater fluctuations may occur due to conditions other than those present at the time measurements were made.

Page 1 of 1 Boring No.: HB-NAPL-107

Maine Department of Transportation
Soil/Rock Exploration Log
US CUSTOMARY UNITS

Project: Approaches to Naples Bay Bridge Routes 11 & 302
Location: Naples, Maine

Boring No.: HB-NAPL-108 PIN: 11060.00

Driller:	MaineDOT	Elevation (ft.)	272.2	Auger ID/OD:	5" Dia.
Operator:	Giguere/Giles	Datum:	NAVD88	Sampler:	Standard Split Spoon
Logged By:	B. Wilder	Rig Type:	CME 45C	Hammer Wt./Fall:	140#/30"
Date Start/Finish:	2/11/10-2/11/10	Drilling Method:	Solid Stem Auger	Core Barrel:	N/A
Boring Location:	28+25, 27.8 Lt.	Casing ID/OD:	N/A	Water Level*:	None Observed
Hammer Efficiency Factor: 0.84		Hammer Type:	Automatic ☒ Hydraulic ☐ Rope & Cathead ☐		

Definitions:
D = Split Spoon Sample
MD = Unsuccessful Split Spoon Sample attempt
U = Thin Wall Tube Sample
MU = Unsuccessful Thin Wall Tube Sample attempt
V = Insitu Vane Shear Test, PP = Pocket Penetrometer
MV = Unsuccessful Insitu Vane Shear Test attempt
R = Rock Core Sample
SSA = Solid Stem Auger
HSA = Hollow Stem Auger
RC = Roller Cone
WOH = weight of 140lb. hammer
WOR/C = weight of rods or casing
WO1P = Weight of one person
S_u = Insitu Field Vane Shear Strength (psf)
T_v = Pocket Torvane Shear Strength (psf)
q_p = Unconfined Compressive Strength (ksf)
N-uncorrected = Raw field SPT N-value
Hammer Efficiency Factor = Annual Calibration Value
N_{60} = SPT N-uncorrected corrected for hammer efficiency
N_{60} = (Hammer Efficiency Factor/60%)*N-uncorrected
$S_{u(lab)}$ = Lab Vane Shear Strength (psf)
WC = water content, percent
LL = Liquid Limit
PL = Plastic Limit
PI = Plasticity Index
G = Grain Size Analysis
C = Consolidation Test

Depth (ft.)	Sample No.	Pen./Rec. (in.)	Sample Depth (ft.)	Blows (/6 in.) Shear Strength (psf) or RQD (%)	N-uncorrected	N_{60}	Casing Blows	Elevation (ft.)	Graphic Log	Visual Description and Remarks	Laboratory Testing Results/ AASHTO and Unified Class
0							SSA	271.80		PAVEMENT. 0.40	
								268.70		Brown, damp, gravelly, fine to coarse SAND, little silt, trace gravel. 3.50	
5	1D	24/18	5.00 - 7.00	2/2/3/4	5	7		265.20		Grey-brown, wet, loose, fine to medium SAND, little silt, trace gravel. 7.00	G#238182 A-1-b, SM WC=20.1%
										Bottom of Exploration at 7.00 feet below ground surface. NO REFUSAL	

Remarks:
All offsets are from Proposed Alignment.

Stratification lines represent approximate boundaries between soil types; transitions may be gradual.
* Water level readings have been made at times and under conditions stated. Groundwater fluctuations may occur due to conditions other than those present at the time measurements were made.

Page 1 of 1 Boring No.: HB-NAPL-108

STATE OF MAINE
DEPARTMENT OF TRANSPORTATION

BH-A106(000)

PIN 11060.00

HIGHWAY PLANS

	BY	DATE
PROJ. MANAGER	Jim Wentworth	
DESIGN-DETAILED	K.BRESKIN	JUN 2010
CHECKED-REVIEWED	T.WHITE	
DESIGN2-DETAILED2		
DESIGN3-DETAILED3		
REVISIONS 1		
REVISIONS 2		
REVISIONS 3		
REVISIONS 4		
FIELD CHANGES		

SIGNATURE

P.E. NUMBER

DATE

NAPLES
ROUTES 11/302
BORING LOGS

SHEET NUMBER 11 OF 160

Filename: ...\msta\012_BORING LOGS H2.dgn Division: HIGHWAY Username: mark.poulin Date:7/22/2010

Maine Department of Transportation

Soil/Rock Exploration Log
US CUSTOMARY UNITS

Project: Approaches to Naples Bay Bridge Routes 11 & 302
Location: Naples, Maine

Boring No.: HB-NAPL-109
PIN: 11060.00

Driller:	MaineDOT	Elevation (ft.):	272.2	Auger ID/OD:	5" Dia.
Operator:	Giguere/Giles	Datum:	NAVD88	Sampler:	Standard Split Spoon
Logged By:	B. Wilder	Rig Type:	CME 45C	Hammer Wt./Fall:	140#/30"
Date Start/Finish:	2/11/10-2/11/10	Drilling Method:	Solid Stem Auger	Core Barrel:	N/A
Boring Location:	29+00, 26.0 Lt.	Casing ID/OD:	N/A	Water Level(ft):	None Observed
Hammer Efficiency Factor:	0.84	Hammer Type:	Automatic ☒ Hydraulic ☐	Rope & Cathead ☐	

Definitions:
S = Split Spoon Sample
MD = Unsuccessful Split Spoon Sample attempt
U = Thin Wall Tube Sample
WU = Unsuccessful Thin Wall Tube Sample attempt
V = Insitu Vane Shear Test. PP = Pocket Penetrometer
WU = Unsuccessful Insitu Vane Shear Test attempt
R = Rock Core Sample
SSA = Solid Stem Auger
HSA = Hollow Stem Auger
RC = Roller Cone
WOH = weight of 140lb. hammer
WOR/C = weight of rods or casing
WOP = Weight of one person
S_u = Insitu Field Vane Shear Strength (psf)
T_v = Pocket Torvane Shear Strength (psf)
q_u = Unconfined Compressive Strength (ksf)
Uncorrected = Raw Field SPT N-value
Hammer Efficiency Factor = Annual Calibration Value
N_{60} = SPT N-uncorrected corrected for hammer efficiency
N_{60} = Hammer Efficiency Factor/60%*N-uncorrected
$S_{u(LAB)}$ = Lab Vane Shear Strength (psf)
WC = water content, percent
LL = Liquid Limit
PL = Plastic Limit
PI = Plasticity Index
G = Grain Size Analysis
C = Consolidation Test

Depth (ft.)	Sample No.	Pen./Rec. (in.)	Sample Depth (ft.)	Blows / 6 in. Sample Strength (psf) or RQD (%)	Uncorrected	N_{60}	Casing Blows	Elevation (ft.)	Graphic Log	Visual Description and Remarks	Laboratory Testing Results/ AASHTO and Unified Class
0							55A	271.90		PAVEMENT. 0.30	
	10	24/16	1.00 - 3.00	10/21/14/18	35	49				Brown, damp, dense, gravelly, fine to coarse SAND, trace silt.	
								268.70		3.50	
5	20	24/17	5.00 - 7.00	5/7/7/8	14	20				Light brown, wet, medium dense, fine to medium SAND, some silt, trace gravel.	GM238180 A-2-4, SM WC=18.2%
								265.20		Bottom of Exploration at 7.00 feet below ground surface. NO REFUSAL 7.00	
10											
15											
20											
25											

Remarks:
All offsets are from Proposed Alignment.

Stratification lines represent approximate boundaries between soil types; transitions may be gradual.
* Water level readings have been made at times and under conditions stated. Groundwater fluctuations may occur due to conditions other than those present at the time measurements were made.

Page 1 of 1
Boring No.: HB-NAPL-109

Maine Department of Transportation

Soil/Rock Exploration Log
US CUSTOMARY UNITS

Project: Approaches to Naples Bay Bridge Routes 11 & 302
Location: Naples, Maine

Boring No.: HB-NAPL-110
PIN: 11060.00

Driller:	MaineDOT	Elevation (ft.):	272.5	Auger ID/OD:	5" Dia.
Operator:	Giguere/Giles	Datum:	NAVD88	Sampler:	Standard Split Spoon
Logged By:	B. Wilder	Rig Type:	CME 45C	Hammer Wt./Fall:	140#/30"
Date Start/Finish:	2/11/10-2/11/10	Drilling Method:	Solid Stem Auger	Core Barrel:	N/A
Boring Location:	31+50, 6.0 Lt.	Casing ID/OD:	N/A	Water Level(ft):	6.0' bgs.
Hammer Efficiency Factor:	0.84	Hammer Type:	Automatic ☒ Hydraulic ☐	Rope & Cathead ☐	

Definitions:
S = Split Spoon Sample
MD = Unsuccessful Split Spoon Sample attempt
U = Thin Wall Tube Sample
WU = Unsuccessful Thin Wall Tube Sample attempt
V = Insitu Vane Shear Test. PP = Pocket Penetrometer
WU = Unsuccessful Insitu Vane Shear Test attempt
R = Rock Core Sample
SSA = Solid Stem Auger
HSA = Hollow Stem Auger
RC = Roller Cone
WOH = weight of 140lb. hammer
WOR/C = weight of rods or casing
WOP = Weight of one person
S_u = Insitu Field Vane Shear Strength (psf)
T_v = Pocket Torvane Shear Strength (psf)
q_u = Unconfined Compressive Strength (ksf)
Uncorrected = Raw Field SPT N-value
Hammer Efficiency Factor = Annual Calibration Value
N_{60} = SPT N-uncorrected corrected for hammer efficiency
N_{60} = Hammer Efficiency Factor/60%*N-uncorrected
$S_{u(LAB)}$ = Lab Vane Shear Strength (psf)
WC = water content, percent
LL = Liquid Limit
PL = Plastic Limit
PI = Plasticity Index
G = Grain Size Analysis
C = Consolidation Test

Depth (ft.)	Sample No.	Pen./Rec. (in.)	Sample Depth (ft.)	Blows / 6 in. Sample Strength (psf) or RQD (%)	Uncorrected	N_{60}	Casing Blows	Elevation (ft.)	Graphic Log	Visual Description and Remarks	Laboratory Testing Results/ AASHTO and Unified Class
0							55A	272.10		PAVEMENT. 0.40	
	10	18/15	1.00 - 2.50	20/42/50	92	129				Brown, damp, very dense, (FROST) gravelly, fine to coarse SAND, little gravel, little silt.	GM238177 A-1-b, SM WC=7.0%
								268.90		3.60	
5	20	24/16	5.00 - 7.00	2/3/4/4	7	10				Grey, wet, loose, sandy SILT.	GM238175 A-4, ML WC=22.6%
								265.50		Bottom of Exploration at 7.00 feet below ground surface. NO REFUSAL 7.00	
10											
15											
20											
25											

Remarks:
All offsets are from Proposed Alignment.

Stratification lines represent approximate boundaries between soil types; transitions may be gradual.
* Water level readings have been made at times and under conditions stated. Groundwater fluctuations may occur due to conditions other than those present at the time measurements were made.

Page 1 of 1
Boring No.: HB-NAPL-110

Maine Department of Transportation

Soil/Rock Exploration Log
US CUSTOMARY UNITS

Project: Approaches to Naples Bay Bridge Routes 11 & 302
Location: Naples, Maine

Boring No.: HB-NAPL-111
PIN: 11060.00

Driller:	MaineDOT	Elevation (ft.):	273.2	Auger ID/OD:	5" Dia.
Operator:	Giguere/Giles	Datum:	NAVD88	Sampler:	Standard Split Spoon
Logged By:	B. Wilder	Rig Type:	CME 45C	Hammer Wt./Fall:	140#/30"
Date Start/Finish:	2/11/10-2/11/10	Drilling Method:	Solid Stem Auger	Core Barrel:	N/A
Boring Location:	62+00, 0.4 Rt.	Casing ID/OD:	N/A	Water Level(ft):	6.0' bgs.
Hammer Efficiency Factor:	0.84	Hammer Type:	Automatic ☒ Hydraulic ☐	Rope & Cathead ☐	

Definitions:
S = Split Spoon Sample
MD = Unsuccessful Split Spoon Sample attempt
U = Thin Wall Tube Sample
WU = Unsuccessful Thin Wall Tube Sample attempt
V = Insitu Vane Shear Test. PP = Pocket Penetrometer
WU = Unsuccessful Insitu Vane Shear Test attempt
R = Rock Core Sample
SSA = Solid Stem Auger
HSA = Hollow Stem Auger
RC = Roller Cone
WOH = weight of 140lb. hammer
WOR/C = weight of rods or casing
WOP = Weight of one person
S_u = Insitu Field Vane Shear Strength (psf)
T_v = Pocket Torvane Shear Strength (psf)
q_u = Unconfined Compressive Strength (ksf)
Uncorrected = Raw Field SPT N-value
Hammer Efficiency Factor = Annual Calibration Value
N_{60} = SPT N-uncorrected corrected for hammer efficiency
N_{60} = Hammer Efficiency Factor/60%*N-uncorrected
$S_{u(LAB)}$ = Lab Vane Shear Strength (psf)
WC = water content, percent
LL = Liquid Limit
PL = Plastic Limit
PI = Plasticity Index
G = Grain Size Analysis
C = Consolidation Test

Depth (ft.)	Sample No.	Pen./Rec. (in.)	Sample Depth (ft.)	Blows / 6 in. Sample Strength (psf) or RQD (%)	Uncorrected	N_{60}	Casing Blows	Elevation (ft.)	Graphic Log	Visual Description and Remarks	Laboratory Testing Results/ AASHTO and Unified Class
0							55A	272.65		PAVEMENT. 0.55	
	10	12/12	1.00 - 2.00	23/60	---					Brown, damp, very dense, (FROST) gravelly, fine to coarse SAND, trace silt.	
								270.20		3.00	
5	20	24/24	5.00 - 7.00	4/4/4/6	8	11				Light brown, wet, loose, fine to medium SAND, trace silt.	
								266.20		Bottom of Exploration at 7.00 feet below ground surface. NO REFUSAL 7.00	
10											
15											
20											
25											

Remarks:
All offsets are from Proposed Alignment.

Stratification lines represent approximate boundaries between soil types; transitions may be gradual.
* Water level readings have been made at times and under conditions stated. Groundwater fluctuations may occur due to conditions other than those present at the time measurements were made.

Page 1 of 1
Boring No.: HB-NAPL-111

STATE OF MAINE
DEPARTMENT OF TRANSPORTATION

BH-A106(000)

PIN
11060.00

HIGHWAY PLANS

		BY	DATE
PROJ. MANAGER	Jim Wentworth		
DESIGN-DETAILED	K.BRESKIN	T. WHITE	JUN 2010
CHECKED-REVIEWED	-----	-----	SIGNATURE
DESIGN2-DETAILED2	-----	-----	-----
DESIGN3-DETAILED3	-----	-----	P.E. NUMBER
REVISIONS 1	-----	-----	-----
REVISIONS 2	-----	-----	DATE
REVISIONS 3	-----	-----	-----
REVISIONS 4	-----	-----	-----
FIELD CHANGES	-----	-----	-----

NAPLES
ROUTES 11/302

BORING LOGS

SHEET NUMBER
12
OF 160

ITEM 609.11 VERTICAL CURB TYPE 1		
PT. TO PT.	OFFSET	LENGTH
1 - 73A	LT.	921.48'
45B - 51B	LT.	30.00'
45C - 51C	LT.	30.00'
59B - 64B	LT.	8.00'
73B - 129	LT.	628.28'
121 - 130	LT.	121.19'
141 - 183	LT.	80.10'
162B - 163B	LT.	14.77'
3 - 72A	RT.	1119.23'
19B - 23B	RT.	83.50'
72B - 112	RT.	564.29'
112 - 113	RT.	31.38'
113 - 151	RT.	468.08'
149 - 151	RT.	22.50'
150 - 158	RT.	15.09'
160 - 161	RT.	28.04'
161 - 165	RT.	72.50'
165 - 168	RT.	31.05'
168 - 184	RT.	114.66'
172 -174	RT.	22.37'
177 - 179	RT.	3.72'
131 - 208	RTE. 114	54.18'
208B - 208C	RTE. 114	12.91'
209 - 217	RTE. 114	57.20'
141 - 215	RTE. 114	190.06'

ITEM 609.12 VERTICAL CURB TYPE 1 - CIRCULAR			
PT. TO PT.	OFFSET	LENGTH	RADIUS
130 - 133	LT.	40.33'	60.00'
149 - 150	RT.	10.42'	5.00'
158 - 160	RT.	5.39'	5.00'
208 - 208B	LT.	11.01'	10.00'

ITEM 609.13 VERTICAL BRIDGE CURB TYPE 1		
PT. TO PT.	OFFSET	LENGTH
73A - 73B	LT.	28.42'
72A - 72B	RT.	33.92'

ITEM 609.234 TERM. CURB TYPE 1 - 4 FT.		
END POINTS		
45B	86	195
45C	91	196
51B	92	208B
51C	103	209
81	105	212
82	118	215
83	120	216
84	153	217
85	154	

ITEM 609.35 CURB TYPE 5 - CIRCULAR		
PT. TO PT.	LENGTH	RADIUS
ML17		
93 - 94	4.53'	2.00'
95 - 96	1.69'	2.00'
99 - 101	3.14'	2.00'
100 - 102	3.14'	2.00'
ML19		
107 - 109	3.14'	2.00'
108 - 110	3.14'	2.00'
116 - 117	9.22'	3.00'
ML28		
136 - 137	5.71'	2.00'
139 - 140	2.59'	10.00'
143 - 144	2.00'	2.00'
145 - 146	4.17'	2.00'
ML24		
190 -192	3.54'	2.00'
189 -191	3.77'	2.00'
187 - 188	5.26'	2.00'
ML25		
198 - 200	3.66'	2.00'
205 - 206	5.77'	2.00'
197 - 199	3.14'	2.00'

PT.	STATION	OFFSET	X COORD	Y COORD
CONTROL POINTS FOR ML01				
1	4+00.00	24.00' LT.	926514.49	414252.38
2	4+33.00	24.00' LT.	926481.67	414255.81
CONTROL POINTS FOR ML02				
4	4+63.00	24.00' LT.	926451.83	414258.92
5	4+87.50	24.00' LT.	926427.47	414261.47
CONTROL POINTS FOR ML03				
7	5+12.50	23.75' LT.	926402.63	414264.31
9	5+26.50	23.47' LT.	926388.73	414266.05
CONTROL POINTS FOR ML04				
10	5+52.50	22.95' LT.	926362.93	414269.27
13	6+36.50	21.27' LT.	926279.56	414279.66
15	6+40.50	21.19' LT.	926275.59	414280.16
17	6+47.50	21.05' LT.	926268.64	414281.02
CONTROL POINTS FOR ML05				
20	6+94.50	20.00' LT.	926221.99	414286.84
25	8+98.00	20.00' LT.	926019.60	414308.09
27	9+02.00	20.00' LT.	926015.62	414308.50
29	10+40.00	20.00' LT.	925878.37	414322.84

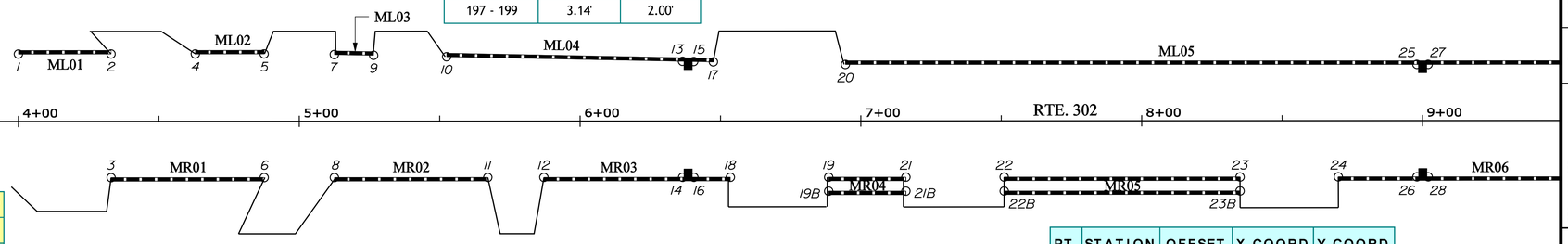

ITEM 609.237 TERM. CURB TYPE 1 - 7 FT.		
END POINTS		
1	29	104
2	30	106
3	39	121
4	40	133
5	41	147
6	42	148
7	44	152
8	45	155
9	51	159
10	52	162
11	58	162B
12	59	163
17	59B	163B
18	60	164
19	60B	171
19B	61	174
20	62	175
21	62B	176
21B	63	177
22	64	178
22B	64B	179
23	65	183
23B	66	184
24	67	193
		194

ITEM 609.34 CURB TYPE 5 - ISLAND	
PT. TO PT.	LENGTH
ML17	
94 - 100	26.73'
101 - 102	4.98'
96 - 99	22.46'
93 - 95	6.35'
ML19	
107 - 108	4.98'
110 -111	16.83'
111 - 117	43.27'
109 - 116	59.93'
ML28	
136 - 139	14.88'
140 - 143	26.86'
144 - 146	4.25'
137 -145	45.79'
ML24	
188 - 190	7.47'
191 - 192	3.84'
187 - 189	7.70'
ML25	
200 - 206	17.27'
199 - 205	16.69'
197 - 198	4.40'

PT.	STATION	OFFSET	X COORD	Y COORD
CONTROL POINTS FOR MR01				
3	4+33.00	20.00' RT.	926486.24	414299.57
6	4+87.50	20.00' RT.	926432.04	414305.23
CONTROL POINTS FOR MR02				
8	5+12.50	20.00' RT.	926407.17	414307.83
11	5+67.11	20.00' RT.	926352.86	414313.50
CONTROL POINTS FOR MR03				
12	5+87.11	20.00' RT.	926332.96	414315.58
14	6+36.50	20.00' RT.	926283.84	414320.71
16	6+40.50	20.00' RT.	926279.86	414321.12
18	6+53.50	20.00' RT.	926266.93	414322.47
CONTROL POINTS FOR MR04				
19	6+88.50	20.00' RT.	926232.12	414326.11
19B	6+88.50	25.00' RT.	926232.64	414331.05
21	7+16.00	20.00' RT.	926204.77	414328.97
21B	7+16.00	25.00' RT.	926205.29	414333.90
CONTROL POINTS FOR MR05				
22	7+51.00	20.00' RT.	926169.96	414332.60
22B	7+51.00	25.00' RT.	926170.48	414337.54
23	8+35.00	20.00' RT.	926086.42	414341.33
23B	8+35.00	25.00' RT.	926086.93	414346.26

STATE OF MAINE
DEPARTMENT OF TRANSPORTATION

BH-A106(000)

PIN
11060.00

HIGHWAY PLANS

	BY	DATE
PROJ. MANAGER	J. Wentworth	
DESIGN-DETAILED	A. Mousseau	July 2010
CHECKED-REVIEWED	bt-tron	------
DESIGN2-DETAILED2	--	------
DESIGN3-DETAILED3	----------	------
REVISIONS 1	------	------
REVISIONS 2	------	------
REVISIONS 3	------	------
REVISIONS 4	------	------
FIELD CHANGES	------	------

SIGNATURE

P.E. NUMBER

DATE

NAPLES
ROUTES 11\302

GEOMETRIC PLANS

SHEET NUMBER

13

OF 160

STA. 2+24.27 TO STA. 9+24.27

Filename: ...\mst0\013_Geometry 01.dgn Division: HIGHWAY Username: mark.poulin Date:7/22/2010

PT.	STATION	OFFSET	X COORD	Y COORD
CONTROL POINTS FOR ML06				
30	10+85.00	20.00' LT.	925833.61	414327.51
31	11+40.22	20.00' LT.	925778.69	414333.25
34	11+98.02	20.00' LT.	925721.01	414339.61
35	12+02.00	20.00' LT.	925717.04	414340.08
37	12+09.97	20.00' LT.	925709.09	414341.01
39	12+25.00	19.35' LT.	925694.24	414343.43
CONTROL POINTS FOR ML07				
41	12+64.00	17.65' LT.	925655.71	414349.72
43	12+79.00	17.00' LT.	925640.90	414352.14
44	13+40.00	17.00' LT.	925580.32	414359.35
CONTROL POINTS FOR ML08				
45	13+82.00	17.00' LT.	925538.62	414364.31
45B	13+82.00	22.00' LT.	925538.03	414359.34
45C	13+82.00	25.00' LT.	925537.67	414356.36
47	13+98.00	17.00' LT.	925522.73	414366.20
49	14+02.00	17.00' LT.	925518.76	414366.67
51	14+20.00	17.00' LT.	925500.88	414368.80
51B	14+20.00	22.00' LT.	925500.29	414363.83
51C	14+20.00	25.00' LT.	925599.94	414360.85

PT.	STATION	OFFSET	X COORD	Y COORD
CONTROL POINTS FOR ML09				
52	14+62.00	17.00' LT.	925459.18	414373.76
54	14+96.40	17.00' LT.	925425.02	414377.82
56	15+00.40	17.00' LT.	925421.04	414378.29
58	15+11.40	17.00' LT.	925410.12	414379.59
CONTROL POINTS FOR ML10				
59	15+50.00	17.00' LT.	925371.79	414384.15
59B	15+50.00	23.00' LT.	925371.08	414378.19
60	15+68.00	17.00' LT.	925353.92	414386.28
60B	15+68.00	23.00' LT.	925353.21	414380.31
CONTROL POINTS FOR ML11				
62	15+74.00	17.00' LT.	925347.96	414386.98
62B	15+74.00	23.00' LT.	925347.25	414381.03
64	15+92.00	17.00' LT.	925330.09	414389.11
64B	15+92.00	23.00' LT.	925329.38	414383.15

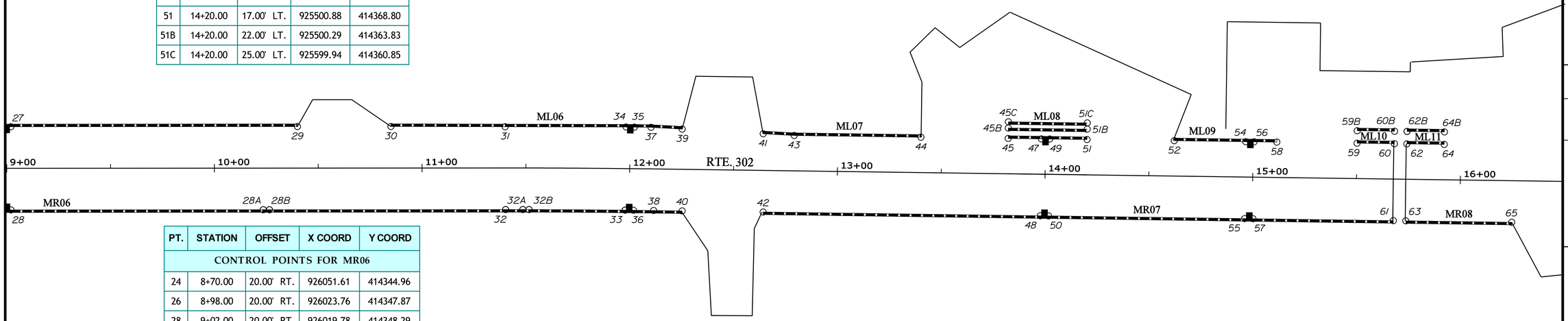

PT.	STATION	OFFSET	X COORD	Y COORD
CONTROL POINTS FOR MR06				
24	8+70.00	20.00' RT.	926051.61	414344.96
26	8+98.00	20.00' RT.	926023.76	414347.87
28	9+02.00	20.00' RT.	926019.78	414348.29
28A	10+23.50	20.00' RT.	925898.94	414360.91
28B	10+26.50	20.00' RT.	925895.95	414361.22
32	11+40.22	20.00' RT.	925782.85	414373.03
32A	11+48.50	20.00' RT.	925774.61	414373.90
32B	11+51.50	20.00' RT.	925771.63	414374.22
33	11+97.98	20.00' RT.	925725.66	414379.34
36	12+02.00	20.00' RT.	925721.69	414379.80
38	12+11.80	20.00' RT.	925711.99	414380.95
40	12+25.50	20.00' RT.	925698.39	414382.57
CONTROL POINTS FOR MR07				
42	12+64.50	20.00' RT.	925659.66	414387.17
48	13+98.00	20.00' RT.	925527.10	414402.94
50	14+02.00	20.00' RT.	925523.13	414403.41
55	14+96.40	20.00' RT.	925429.39	414414.56
57	15+00.40	20.00' RT.	925425.41	414415.03
61	15+68.00	20.00' RT.	925358.29	414423.02
CONTROL POINTS FOR MR08				
63	15+74.00	20.00' RT.	925352.33	414423.73
65	16+25.00	20.00' RT.	925301.69	414429.75

STATE OF MAINE
DEPARTMENT OF TRANSPORTATION

BH-A106(000)

PIN 11060.00

HIGHWAY PLANS

	BY	DATE
PROJ. MANAGER	J. Wentworth	July 2010
DESIGN-DETAILED	A. Mousseau	------
CHECKED-REVIEWED	------	------
DESIGN2-DETAILED2	------	------
DESIGN3-DETAILED3	------	------
REVISIONS 1	------	------
REVISIONS 2	------	------
REVISIONS 3	------	------
REVISIONS 4	------	------
FIELD CHANGES	------	------

SIGNATURE

P.E. NUMBER

DATE

NAPLES
ROUTES 11\302

GEOMETRIC PLANS

SHEET NUMBER

14

OF 160

STA. 9+24.27 TO STA. 16+24.27

Filename: ...\mstoV014_Geometry 02.dgn Division: HIGHWAY Username: mark.poulin Date:7/22/2010

PT.	STATION	OFFSET	X COORD	Y COORD
CONTROL POINTS FOR ML12				
67	16+69.00	17.00' LT.	925253.62	414398.20
69	16+79.41	17.00' LT.	925243.29	414399.43
70	16+97.93	17.00' LT.	925225.27	414401.37
73	17+02.01	17.00' LT.	925221.28	414401.74
73A	19+29.09	17.00' LT.	925000.11	414390.25
73B	19+57.51	17.00' LT.	924972.86	414384.43
74	20+60.46	17.00' LT.	924876.49	414355.29
76	21+98.00	17.00' LT.	924747.67	414307.11
78	22+02.00	17.00' LT.	924743.93	414305.70
80	22+49.00	17.00' LT.	924699.91	414289.24
81	22+56.00	17.26' LT.	924693.44	414286.54
CONTROL POINTS FOR ML13				
82	22+82.00	18.41' LT.	924669.49	414276.36
83	22+90.00	18.76' LT.	924662.13	414273.23

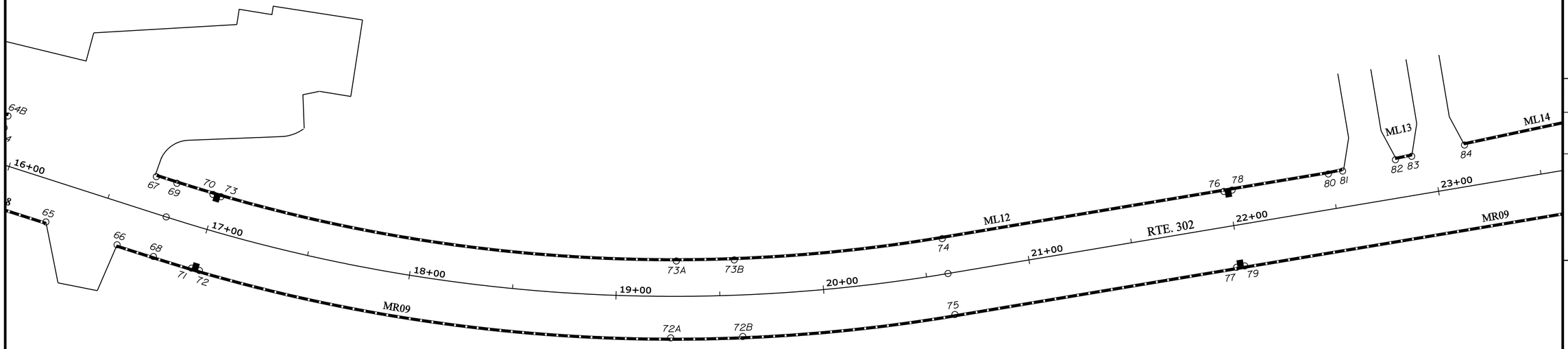

PT.	STATION	OFFSET	X COORD	Y COORD
CONTROL POINTS FOR MR09				
66	16+61.00	20.00' RT.	925265.94	414434.00
68	16+79.38	20.00' RT.	925247.69	414436.17
71	16+98.08	20.00' RT.	925228.63	414438.21
72	17+01.98	20.00' RT.	925224.65	414438.58
72A	19+26.34	20.00' RT.	924995.72	414427.09
72B	19+60.26	20.00' RT.	924961.77	414419.81
75	20+60.46	20.00' RT.	924863.53	414419.81
77	21+98.00	20.00' RT.	924734.71	414341.76
79	22+02.00	20.00' RT.	924730.97	414340.36
88	24+48.00	20.00' RT.	924500.56	414254.18
90	24+52.00	20.00' RT.	924496.81	414252.77
104	25+23.00	20.00' RT.	924430.31	414227.90

STATE OF MAINE
DEPARTMENT OF TRANSPORTATION

BH-A106(000)

PIN
11060.00

HIGHWAY PLANS

	BY	DATE
PROJ. MANAGER	J. Wentworth	
DESIGN-DETAILED	A. Mousseau	July 2010
CHECKED-REVIEWED	-----	-----
DESIGN2-DETAILED2	-----	-----
DESIGN3-DETAILED3	-----	-----
REVISIONS 1	-----	-----
REVISIONS 2	-----	-----
REVISIONS 3	-----	-----
REVISIONS 4	-----	-----
FIELD CHANGES	-----	-----

SIGNATURE

P.E. NUMBER

DATE

NAPLES
ROUTES 11\302

GEOMETRIC PLANS

SHEET NUMBER

15

OF 160

STA. 16+24.27 TO STA. 23+24.27

Filename: ...\mst\015_Geometry 03.dgn Division: HIGHWAY Username: mark.poulin Date:7/22/2010

PT.	STATION	OFFSET	X COORD	Y COORD
CONTROL POINTS FOR ML14				
84	23+16.00	19.90' LT.	924638.17	414263.05
85	23+89.00	23.12' LT.	924570.92	414234.46
CONTROL POINTS FOR ML15				
86	24+15.00	24.26' LT.	924546.97	414224.28
87	24+48.00	25.71' LT.	924516.57	414211.36
89	24+52.00	25.89' LT.	924512.89	414209.80
91	24+59.00	26.20' LT.	924506.44	414207.05
CONTROL POINTS FOR ML16				
92	24+85.00	27.34' LT.	924482.49	414196.87
98	25+00.00	28.00' LT.	924468.67	414191.00
103	25+23.00	28.00' LT.	924447.13	414182.94
CONTROL POINTS FOR ML17 (ISLAND)				
93	24+90.78	6.35' LT.	924469.72	414214.50
94	24+92.20	9.68' LT.	924469.56	414210.89
95	24+95.02	1.61' LT.	924464.09	414217.46
96	24+96.51	1.00' LT.	924462.46	414217.56
97	24+99.72	10.00' LT.	924462.62	414207.99
99	25+18.97	1.00' LT.	924441.44	414209.65
100	25+18.97	10.00' LT.	924444.59	414201.24
101	25+20.97	3.00' LT.	924440.27	414207.07
102	25+20.97	8.00' LT.	924442.01	414202.41

PT.	STATION	OFFSET	X COORD	Y COORD
CONTROL POINTS FOR ML18				
105	25+29.00	28.00' LT.	924441.51	414180.84
114	25+88.00	28.00' LT.	924386.25	414160.17
115	25+92.00	28.00' LT.	924382.50	414158.77
118	25+99.00	28.00' LT.	924375.94	414156.32
CONTROL POINTS FOR ML19 (ISLAND)				
107	25+30.98	8.00' LT.	924432.64	414198.90
108	25+30.98	3.00' LT.	924430.89	414203.56
109	25+32.98	10.00' LT.	924431.46	414196.33
110	25+32.98	1.00' LT.	924428.32	414204.74
111	25+49.95	1.00' LT.	924412.43	414198.79
116	25+92.91	10.00' LT.	924375.34	414175.33
117	25+93.11	4.00' LT.	924373.04	414180.87
CONTROL POINTS FOR ML20				
120	26+40.97	28.00' LT.	924335.47	414141.79
121	26+78.88	34.00' LT.	924299.56	414124.53
123	26+98.11	28.00' LT.	924278.73	414125.16
124	27+01.97	28.00' LT.	924274.85	414124.18
126	27+15.97	33.99' LT.	924262.10	414114.96
127	27+18.98	28.00' LT.	924257.72	414120.11
129	27+98.09	32.06' LT.	924177.62	414101.92
130	28+01.52	38.77' LT.	924174.88	414094.82
131	28+01.91	32.48' LT.	924173.72	414101.01
133	28+34.92	56.48' LT.	924141.42	414073.70
193	60+54.09	40.09' LT.	924134.15	414074.10

PT.	STATION	OFFSET	X COORD	Y COORD
CONTROL POINTS FOR ML21 (RTE. 114)				
195	60+60.09	36.13' LT.	924130.25	414068.06
201	60+68.14	32.06' LT.	924126.27	414059.96
204	60+71.87	30.60' LT.	924124.84	414056.22
208	60+85.73	27.16' LT.	924121.54	414042.33
208B	60+89.48	31.61' LT.	924126.02	414038.62
208C	60+98.52	41.45' LT.	924135.97	414030.39
CONTROL POINTS FOR ML22 (RTE. 114)				
209	61+40.37	24.59' LT.	924123.99	413992.37
210	61+48.09	23.79' LT.	924124.64	413984.39
211	61+51.96	23.42' LT.	924124.96	413980.41
212	61+86.12	20.96' LT.	924127.78	413945.33
CONTROL POINTS FOR ML23 (RTE. 114)				
216	62+13.90	20.08' LT.	924130.07	413916.92
217	62+50.00	20.00' LT.	924132.64	413880.00
CONTROL POINTS FOR ML24 (ISLAND/RTE.114)				
187	60+43.15	6.81' LT.	924087.15	414084.57
188	60+43.37	3.00' LT.	924091.01	414084.38
189	60+50.47	9.18' LT.	924084.84	414077.22
190	60+50.70	1.50' LT.	924092.55	414077.07
191	60+53.09	7.28' LT.	924086.77	414074.62
192	60+53.09	3.44' LT.	924090.61	414074.66

PT.	STATION	OFFSET	X COORD	Y COORD
CONTROL POINTS FOR ML27				
194	60+54.09	52.90' LT.	924041.16	414073.17
186	60+37.65	72.67' LT.	924021.24	414089.41
185	60+35.61	76.10' LT.	924017.78	414091.42
141	29+75.24	30.76' LT.	923993.89	414100.70
147	30+05.65	26.96' LT.	923963.03	414108.13
CONTROL POINTS FOR ML28 (ISLAND)				
136	29+55.08	5.52' LT.	924016.56	414124.11
137	29+55.68	9.44' LT.	924015.67	414120.25
138	29+63.14	9.40' LT.	924008.15	414120.86
139	29+69.30	1.31' LT.	924002.67	414129.46
140	29+71.85	1.00' LT.	924000.15	414130.06
142	29+93.65	8.91' LT.	923977.50	414124.46
143	29+98.69	1.00' LT.	923973.44	414132.96
144	30+00.35	1.93' LT.	923971.67	414132.23
145	30+00.94	8.59' LT.	923970.22	414125.70
146	30+02.56	5.55' LT.	923969.00	414128.93
CONTROL POINTS FOR ML29				
148	30+54.03	23.37' LT.	923914.41	414119.87
152	30+67.62	22.68' LT.	923900.86	414123.38

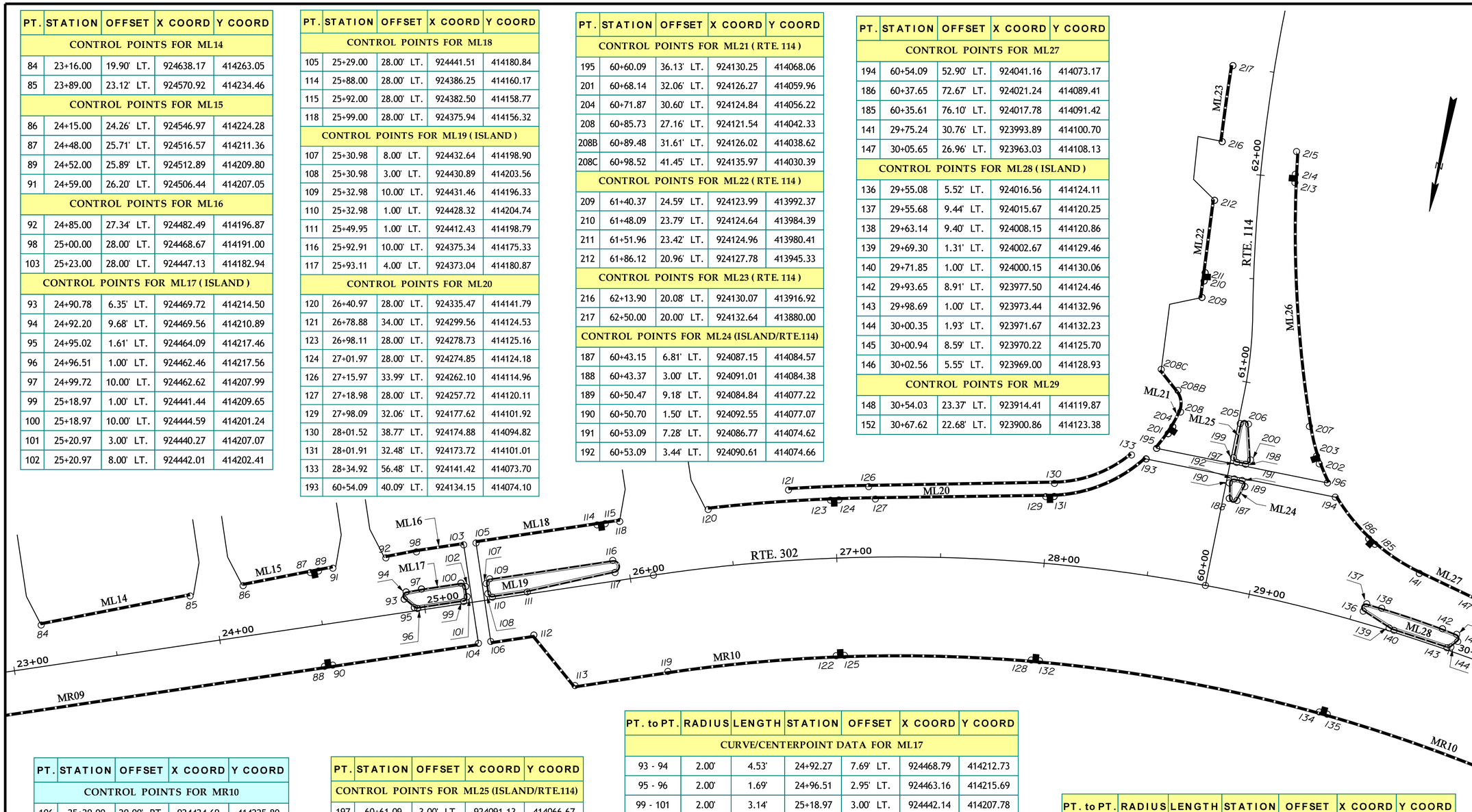

PT.	STATION	OFFSET	X COORD	Y COORD
CONTROL POINTS FOR MR10				
106	25+29.00	20.00' RT.	924424.69	414225.80
112	25+50.00	20.00' RT.	924405.02	414218.44
113	25+65.99	47.00' RT.	924380.58	414238.13
119	26+11.24	47.00' RT.	924338.24	414222.17
122	26+98.00	47.00' RT.	924260.49	414197.91
125	27+02.00	47.00' RT.	924256.62	414196.93
128	27+98.00	47.00' RT.	924168.11	414180.41
132	28+02.00	47.00' RT.	924164.14	414179.92
134	29+48.00	47.00' RT.	924027.18	414176.03
135	29+52.00	47.00' RT.	924023.18	414176.30
149	30+55.98	27.42' RT.	923922.43	414170.07
150	30+60.49	20.00' RT.	923916.65	414163.65
151	30+67.61	47.00' RT.	923915.56	414191.49
153	30+67.62	20.00' RT.	923909.86	414165.08

PT.	STATION	OFFSET	X COORD	Y COORD
CONTROL POINTS FOR ML25 (ISLAND/RTE.114)				
197	60+61.09	3.00' LT.	924091.13	414066.67
198	60+61.09	7.40' LT.	924086.73	414066.62
199	60+63.09	1.00' LT.	924093.15	414064.69
200	60+63.60	9.34' LT.	924084.82	414064.09
205	60+79.78	1.00' LT.	924093.32	414047.99
206	60+80.29	4.93' LT.	924089.39	414047.45
CONTROL POINTS FOR ML26 (RTE. 114)				
215	62+13.29	16.06' LT.	924094.04	413914.12
214	62+02.08	16.64' LT.	924092.35	413924.99
213	61+98.00	16.86' LT.	924091.69	413928.93
207	60+85.04	33.96' LT.	924060.41	414042.41
203	60+71.74	40.13' LT.	924054.11	414055.65
202	60+68.30	42.16' LT.	924052.05	414059.07
196	60+60.09	47.85' LT.	924046.28	414067.22

PT. to PT.	RADIUS	LENGTH	STATION	OFFSET	X COORD	Y COORD
CURVE/CENTERPOINT DATA FOR ML17						
93 - 94	2.00'	4.53'	24+92.27	7.69' LT.	924468.79	414212.73
95 - 96	2.00'	1.69'	24+96.51	2.95' LT.	924463.16	414215.69
99 - 101	2.00'	3.14'	25+18.97	3.00' LT.	924442.14	414207.78
100 - 102	2.00'	3.14'	25+18.97	8.00' LT.	924443.89	414203.11
CURVE/CENTERPOINT DATA FOR ML19						
107 - 109	2.00'	3.14'	25+32.98	8.00' LT.	924430.76	414198.20
108 - 110	2.00'	3.14'	25+32.98	3.00' LT.	924429.02	414202.86
116 - 117	3.00'	9.22'	25+93.11	7.00' LT.	924374.09	414178.06
CURVE/CENTERPOINT DATA FOR ML20/ML21						
130 - 133	60.00'	40.33'	27+95.82	98.45' LT.	924188.38	414036.36
131 - 208	70.00'	77.08'	27+93.93	101.95' LT.	924190.93	414033.17
208 - 208B	10.00'	11.01'	60+81.84	38.06' LT.	924132.40	414046.33
CURVE/CENTERPOINT DATA FOR ML24						
187 - 188	2.00'	5.26'	60+43.77	4.91' RT.	924089.05	414083.97
189 - 191	2.00'	3.77'	60+51.09	7.28' RT.	924086.75	414076.62
190 - 192	2.00'	3.54'	60+51.09	3.44' RT.	924090.59	414076.67

PT. to PT.	RADIUS	LENGTH	STATION	OFFSET	X COORD	Y COORD
CURVE/CENTERPOINT DATA FOR ML25						
197 - 199	2.00'	3.14'	60+63.09	3.00' RT.	924091.15	414064.67
198 - 200	2.00'	3.66'	60+63.09	7.40' RT.	924086.75	414064.62
205 - 206	2.00'	5.77'	60+80.29	2.93' RT.	924091.39	414047.46
CURVE/CENTERPOINT DATA FOR ML26/ML27						
141 - 207	95.00'	92.00'	61+09.40	123.80' RT.	923971.74	414008.33
207 - 213	599.53'	117.91'	62+97.88	612.82' RT.	923500.89	413827.16
CURVE/CENTERPOINT DATA FOR ML28						
136 - 137	2.00'	5.71'	29+55.10	7.52' LT.	924016.39	414122.12
138 - 142	437.09'	30.87'	29+63.45	427.69' LT.	924043.78	414556.50
145 - 146	2.00'	4.17'	30+00.87	6.59' LT.	923970.56	414127.67
143 - 144	2.00'	2.00'	29+98.65	2.98' LT.	923973.23	414130.97
139 - 140	10.00'	2.59'	29+72.00	10.93' LT.	923999.07	414120.12

STA. 23+24.27 TO STA. 30+24.27

STATE OF MAINE
DEPARTMENT OF TRANSPORTATION

BH-A106(000)

PIN
11060.00

HIGHWAY PLANS

	BY	DATE
PROJ. MANAGER	J. Wentworth	
DESIGN-DETAILED	A. Mousseau	July 2010
CHECKED-REVIEWED	-----	-----
DESIGN2-DETAILED2	-----	-----
DESIGN3-DETAILED3	-----	-----
REVISIONS 1	-----	-----
REVISIONS 2	-----	-----
REVISIONS 3	-----	-----
REVISIONS 4	-----	-----
FIELD CHANGES	-----	-----

SIGNATURE

P.E. NUMBER

DATE

NAPLES
ROUTES 11\302

GEOMETRIC PLANS

SHEET NUMBER

16

OF 160

Filename: ...\mst0\016_Geometry 04.dgn Division: HIGHWAY Username: mark.poulin Date:7/22/2010

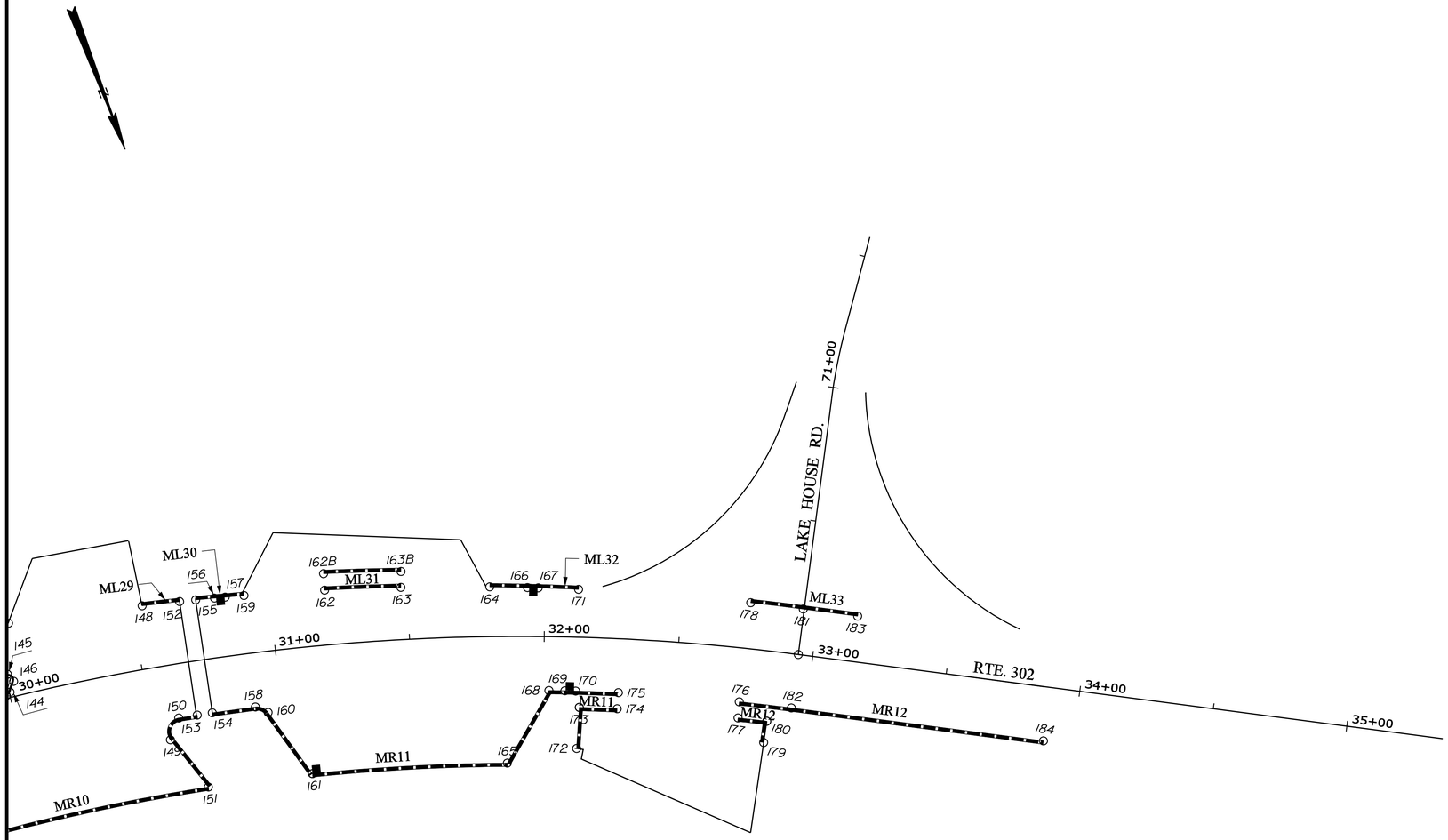

PT.	STATION	OFFSET	X COORD	Y COORD
CONTROL POINTS FOR ML30				
155	30+73.45	22.40' LT.	923895.06	414124.95
156	30+80.25	22.07' LT.	923888.32	414126.81
157	30+84.14	21.89' LT.	923884.47	414127.90
159	30+90.95	21.58' LT.	923877.74	414129.85
CONTROL POINTS FOR ML31				
162	31+20.16	20.38' LT.	923849.09	414138.72
B	31+20.31	26.51' LT.	923847.25	414132.87
163	31+47.80	19.40' LT.	923822.27	414147.90
B	31+48.16	25.28' LT.	923820.11	414142.42
CONTROL POINTS FOR ML32				
164	31+80.03	18.47' LT.	923791.40	414159.56
166	31+93.69	18.15' LT.	923778.44	414164.81
167	31+97.60	18.06' LT.	923774.75	414166.35
171	32+12.27	17.77' LT.	923760.95	414172.24
CONTROL POINTS FOR ML33				
178	32+75.03	17.05' LT.	923703.05	414199.77
181	32+94.26	17.00' LT.	923685.69	414208.94
183	33+14.62	17.00' LT.	923667.78	414218.64

PT. to PT.	RADIUS	LENGTH	STATION	OFFSET	X COORD	Y COORD
CURVE/CENTERPOINT DATA FOR MR10						
149 - 150	5.00'	10.42'	30+60.49	24.98' RT.	923917.66	414168.54
CURVE/CENTERPOINT DATA FOR MR11						
158 - 160	5.00'	5.39'	30+90.03	25.01' RT.	923889.76	414174.88
CURVE/CENTERPOINT DATA FOR ML29/ML30/ML31/ML32/ML33						
148 - 181	985.00'	246.45'	24+84.31	910.06' RT.	924154.72	415075.11
162B - 163B	991.00'	28.77'	24+77.85	904.69' RT.	924162.66	415072.34

PT.	STATION	OFFSET	X COORD	Y COORD
CONTROL POINTS FOR MR11				
154	30+73.43	20.00' RT.	923904.32	414166.30
158	30+89.99	20.00' RT.	923888.61	414170.01
160	30+94.54	22.60' RT.	923884.93	414173.59
161	31+08.99	47.00' RT.	923877.72	414200.68
165	31+86.02	47.00' RT.	923808.76	414222.96
168	32+02.02	20.00' RT.	923784.69	414203.35
169	32+08.09	20.00' RT.	923779.20	414205.57
170	32+12.19	20.00' RT.	923775.50	414207.09
172	32+13.19	41.28' RT.	923782.79	414227.11
173	32+13.76	26.00' RT.	923776.40	414213.22
174	32+28.32	26.00' RT.	923763.45	414218.76
175	32+28.48	20.00' RT.	923760.90	414213.33
CONTROL POINTS FOR MR12				
176	32+74.64	20.00' RT.	923720.23	414232.59
177	32+74.84	26.00' RT.	923722.79	414238.03
179	32+85.71	34.00' RT.	923717.18	414249.94
180	32+85.92	26.00' RT.	923713.27	414242.97
182	32+94.62	20.00' RT.	923702.98	414241.66
184	33+89.00	20.00' RT.	923619.99	414286.60

STATE OF MAINE
DEPARTMENT OF TRANSPORTATION

BH-A106(000)

PIN 11060.00

HIGHWAY PLANS

		BY	DATE
PROJ. MANAGER	J. Wentworth		
DESIGN-DETAILED	A. Mousseau	bt-tron	July 2010
CHECKED-REVIEWED	-----	-----	-----
DESIGN2-DETAILED2	-----	--	-----
DESIGN3-DETAILED3	-----	-----	-----
REVISIONS 1	-----	-----	-----
REVISIONS 2	-----	-----	-----
REVISIONS 3	-----	-----	-----
REVISIONS 4	-----	-----	-----
FIELD CHANGES	-----	-----	-----

SIGNATURE

P.E. NUMBER

DATE

NAPLES
ROUTES 11\302

GEOMETRIC PLANS

SHEET NUMBER

17

OF 160

STA. 30+24.27 TO STA. 34+00.00

Filename: ...\msto\017_Geometry 05.dgn Division: HIGHWAY Username: mark.poulin Date:7/22/2010

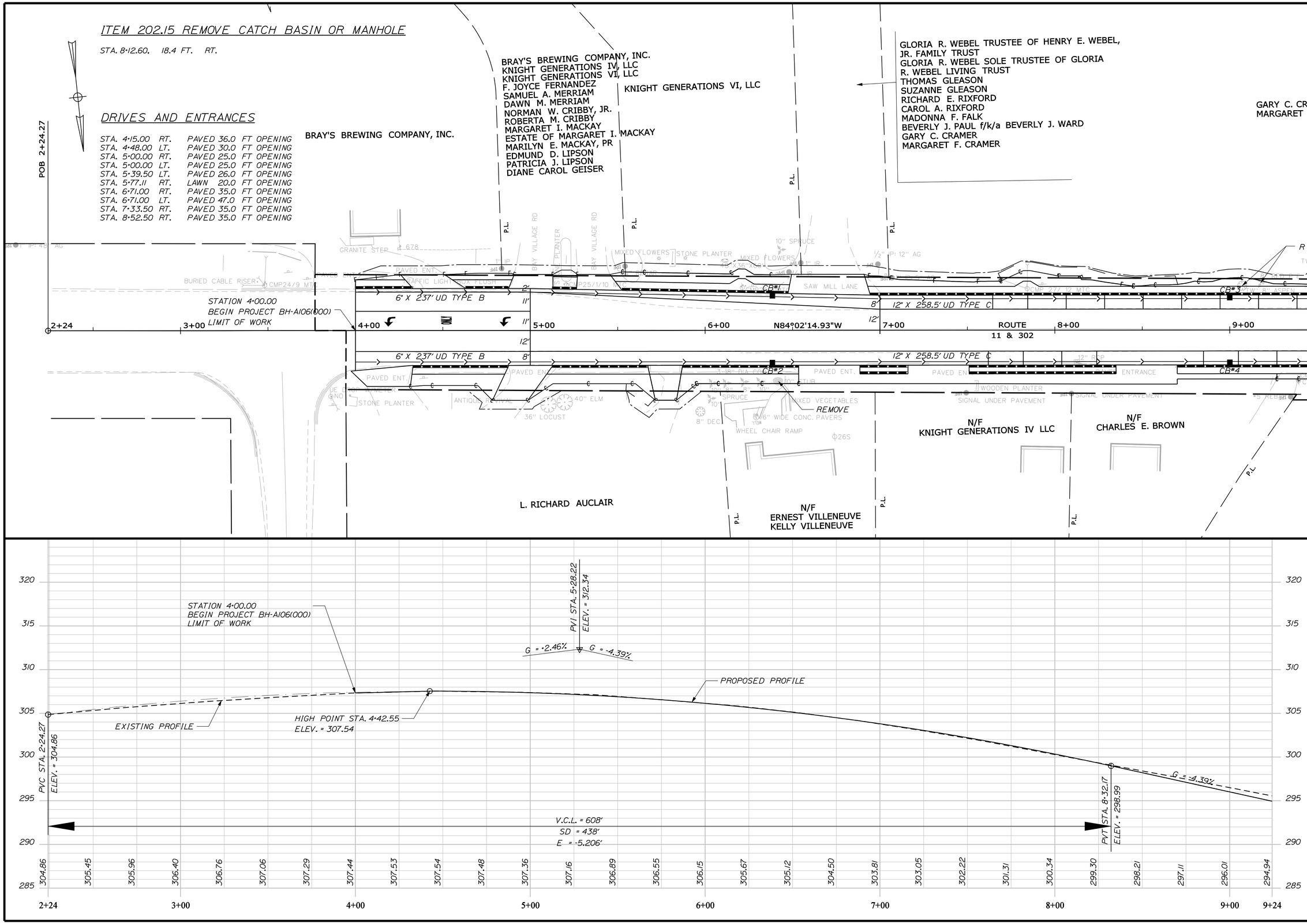

STATE OF MAINE
DEPARTMENT OF TRANSPORTATION

BH-A106(000)

PIN 11060.00

HIGHWAY PLANS

	BY	DATE
PROJ. MANAGER	J. Wentworth	
DESIGN-DETAILED	A Mousseau	bt-tran	July 2010
CHECKED-REVIEWED		
DESIGN2-DETAILED2		
DESIGN3-DETAILED3		
REVISIONS 1		
REVISIONS 2		
REVISIONS 3		
REVISIONS 4		
FIELD CHANGES		

SIGNATURE

P.E. NUMBER

DATE

NAPLES
ROUTES 11\302

PLANS

SHEET NUMBER

18

OF 160

STA. 2+24.27 TO STA. 9+24.27

Filename: ...\HIGHWAY\MSTA\018_HDPLAN1.DGN Division: HIGHWAY Username: rhobe.moulton Date:7/26/2010

GARY C. CRAMER
MARGARET F. CRAMER

ITEM 201.23 REMOVE SINGLE TREE - TOP ONLY

STA. 9+90.96, 31.08' LT. 12" ASPEN

ITEM 201.24 REMOVE STUMP

STA. 9+90.96, 31.08' LT. 12" ASPEN

ITEM 202.15 REMOVE CATCH BASIN OR MANHOLE

STA. 12+06.80, 19.5 FT. RT.
STA. 14+25.20, 25.6 FT. LT.
STA. 14+27.40, 14.4 FT. RT.

DRIVES AND ENTRANCES

STA. 10+62.50 LT.	PAVED 45.0 FT OPENING
STA. 12+44.50 LT.	PAVED 39.0 FT OPENING
STA. 12+45.00 RT.	PAVED 39.0 FT OPENING
STA. 13+61.00 LT.	PAVED 42.0 FT OPENING
STA. 14+41.00 LT.	PAVED 42.0 FT OPENING
STA. 15+30.70 LT.	PAVED 38.6 FT OPENING
STA. 16+30.50 LT.	PAVED 77.0 FT OPENING
STA. 16+43.00 RT.	PAVED 36.0 FT OPENING

KEEN ENTERPRISES
d/b/a BAYVIEW CABINS, INC.

CAUSEWAY MARINA, INC.

CONCRETE TANK TO REMAIN
USE EXTREME CAUTION

CONCRETE TANK AND PIPE TO REMAIN
USE EXTREME CAUTION

REMOVE

REMOVE

ITEM 604.2413 CONCRETE SIDEWALK CULVERT

STA. 10+25.00 RT.
STA. 11+50.00 RT.

ITEM 605.39 UNDERDRAIN DITCH SOIL FILTER

STA. 10+25.00 TO 12+00.00 28' RT.

CURVE DATA #1
PI = 11+76.01
D = 1°08'45.3"
Δ = 0°49'13.0" Rt.
R = 5000.00'
L = 71.58'
T = 35.79'
E = 0.13'

PC 11+40.22
PT 12+11.80

BAY OF NAPLES CONDOMINIUM ASSOCIATION, INC.

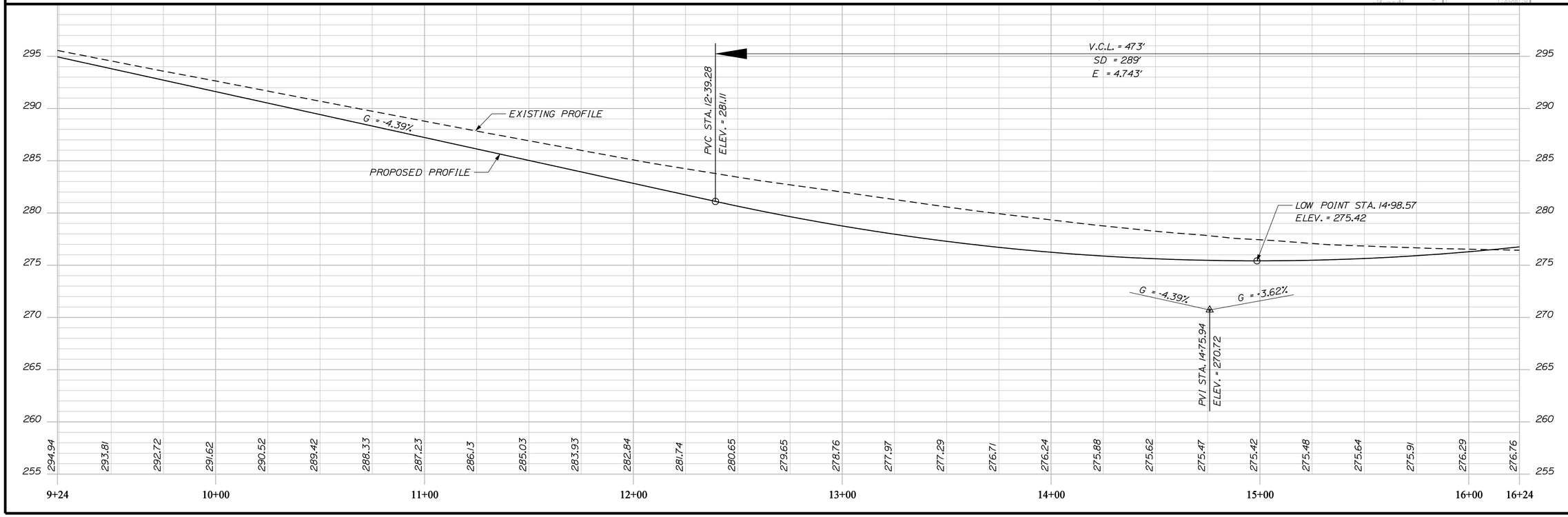

STATE OF MAINE
DEPARTMENT OF TRANSPORTATION

BH-A106(000)

PIN 11060.00

HIGHWAY PLANS

	BY	DATE
PROJ. MANAGER	J. Wentworth	
DESIGN-DETAILED	A. Mousseau	July 2010
CHECKED-REVIEWED	bt-tron	------
DESIGN2-DETAILED2	--	------
DESIGN3-DETAILED3	--	------
REVISIONS 1		------
REVISIONS 2		------
REVISIONS 3		------
REVISIONS 4		------
FIELD CHANGES		------

SIGNATURE ------

P.E. NUMBER ------

DATE ------

NAPLES
ROUTES 11\302

PLANS

SHEET NUMBER
19
OF 160

STA. 9+24.27 TO STA. 16+24.27

Filename: ...\highway\msto\019_HDPLAN2.DGN Division: HIGHWAY Username: rhobe.moulton Date:7/26/2010

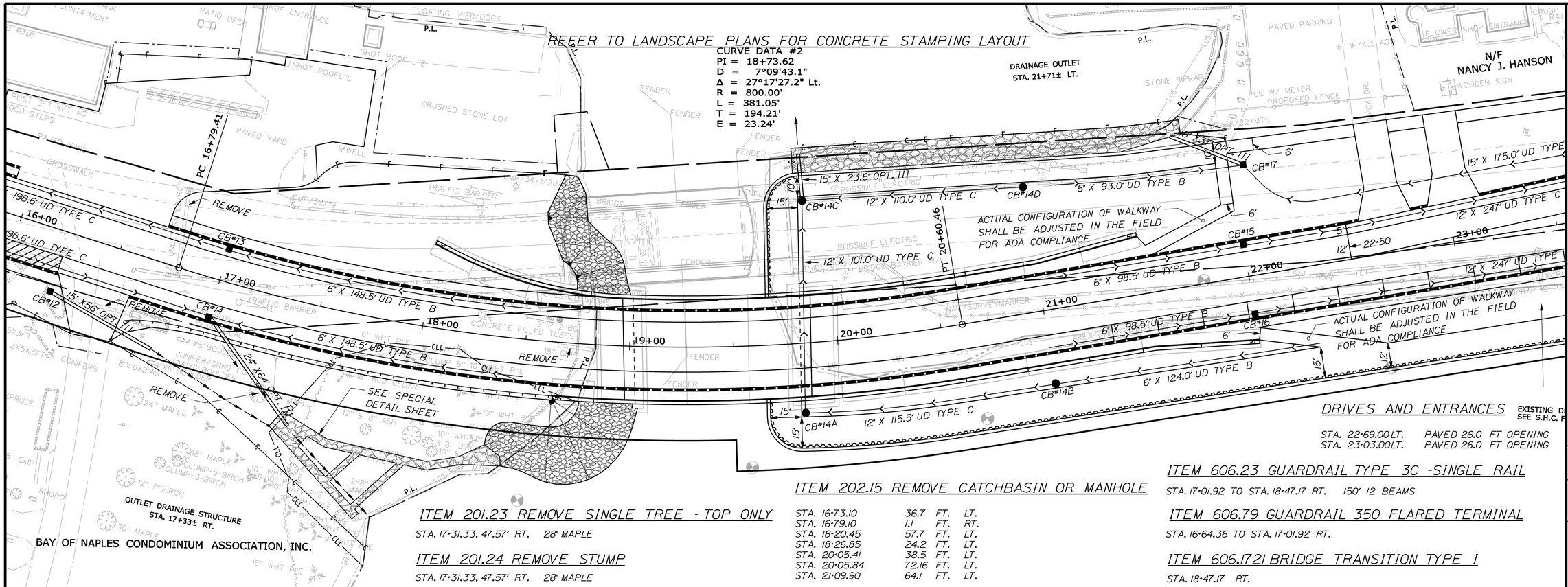

DRIVES AND ENTRANCES

EXISTING D
SEE S.H.C. F

STA. 22+69.00 LT. PAVED 26.0 FT OPENING
STA. 23+03.00 LT. PAVED 26.0 FT OPENING

ITEM 201.23 REMOVE SINGLE TREE - TOP ONLY

STA. 17+31.33. 47.57' RT. 28" MAPLE

ITEM 201.24 REMOVE STUMP

STA. 17+31.33. 47.57' RT. 28" MAPLE

ITEM 202.15 REMOVE CATCHBASIN OR MANHOLE

STA. 16+73.10	36.7	FT.	LT.
STA. 16+79.10	1.1	FT.	RT.
STA. 18+20.45	57.7	FT.	LT.
STA. 18+26.85	24.2	FT.	LT.
STA. 20+05.41	38.5	FT.	LT.
STA. 20+05.84	72.16	FT.	LT.
STA. 21+09.90	64.1	FT.	LT.

ITEM 606.23 GUARDRAIL TYPE 3C -SINGLE RAIL

STA. 17+01.92 TO STA. 18+47.17 RT. 150' 12 BEAMS

ITEM 606.79 GUARDRAIL 350 FLARED TERMINAL

STA. 16+64.36 TO STA. 17+01.92 RT.

ITEM 606.1721 BRIDGE TRANSITION TYPE I

STA. 18+47.17 RT.

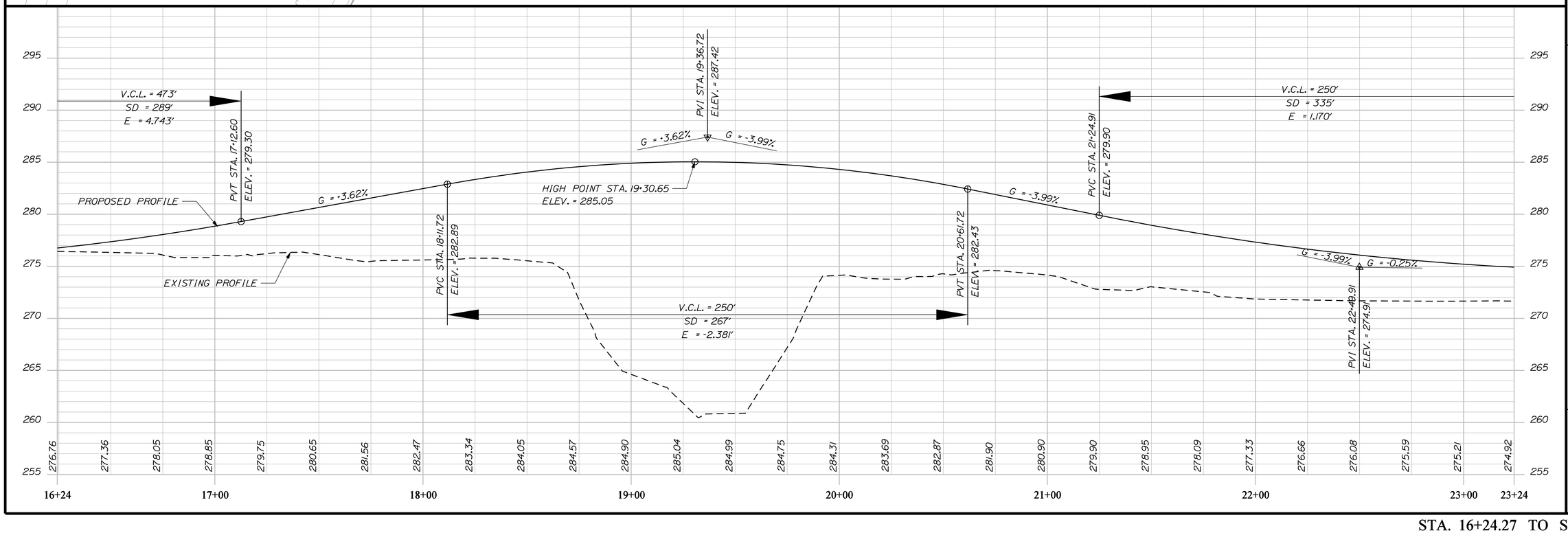

STA. 16+24.27 TO STA. 23+24.27

STATE OF MAINE
DEPARTMENT OF TRANSPORTATION

BH-A106(000)

PIN
11060.00

HIGHWAY PLANS

	BY	DATE
PROJ. MANAGER	J. Wentworth	
DESIGN-DETAILED	A. Mousseau	July 2010
CHECKED-REVIEWED	bt-tron	
DESIGN2-DETAILED2	-----	-----
DESIGN3-DETAILED3	-----	-----
REVISIONS 1	-----	-----
REVISIONS 2	-----	-----
REVISIONS 3	-----	-----
REVISIONS 4	-----	-----
FIELD CHANGES	-----	-----

SIGNATURE

P.E. NUMBER

DATE

NAPLES
ROUTES 11\302

PLANS

SHEET NUMBER
20
OF 160

Filename: ...\highway\rnsto\020_HDPLAN3.DGN Division: HIGHWAY Username: rhobe.moulton Date:7/26/2010

REFER TO LANDSCAPE PLANS FOR CONCRETE STAMPING LAYOUT

ITEM 202.15 REMOVE CATCHBASIN OR MANHOLE

STA. 23+39.30	11.0 FT.	RT.
STA. 23+43.10	46.2 FT.	LT.
STA. 26+40.90	28.3 FT.	RT.
STA. 26+42.44	28.4 FT.	LT.
STA. 28+23.60	61.9 FT.	LT.
STA. 28+40.40	61.2 FT.	LT.
STA. 29+04.50	63.9 FT.	LT.
STA. 29+39.80	34.6 FT.	RT.
STA. 61+49.70	30.9 FT.	LT.

N/F EVERGREEN CREDIT UNION

N/F KRISTOPHER M. KLIMEK

N/F NANCY J. HANSON

N/F NAPLES CASINO, INC.

DAVID STETSON
ARLENE STETSON

CURVE DATA #2
PI = 62+08.35
D = 7°09'43.1"
Δ = 10°51'37.1" Rt.
R = 800.00'
L = 151.64'
T = 76.05'
E = 3.61'

CURVE DATA #1
PI = 61+13.74
D = 28°38'52.4"
Δ = 10°39'54.3" Lt.
R = 200.00'
L = 37.23'
T = 18.67'
E = 0.87'

Sta. 28+78.46 on Rte 302
Sta. 60+00.00 on Rte 114

CURB TO REMAIN AS DIRECTED BY RESIDENT

GRASS - LINED SEDIMENT TRAP

CRUSHED STONE

GRASS

HMA

REMOVE

PRC 61+32.30

PC 60+95.08

S69°29'30.89"W

STA. 25+50

STA. 26+75

STA. 28+25

ANGLED PARKING STRIPES AT 60 DEGREES TO CURBLINE

EXISTING DRAINAGE SEE S.H.C. FILE NO. 3-98

WHARF
N/F
SALLY A. CHASE
CATHY K. WAKEFIELD
CARLA K. McWALTERS
CARLTON K. CHASE
CONRAD K. CHASE
SHAWN A. CHASE
(OWNER OF RECORD)

DOCK 1

DOCK 2

PC 26+11.24

ITEM 201.23 REMOVE SINGLE TREE - TOP ONLY

STA. 29+49.91, 48.39' LT. 20" OAK

ITEM 201.24 REMOVE STUMP

STA. 29+49.91, 48.39' LT. 20" OAK

WHARF N/F NAPLES CASINO, INC.

DRIVES AND ENTRANCES

STA. 24+02.00 LT.	PAVED 26.0 FT OPENING
STA. 24+72.00 LT.	PAVED 26.0 FT OPENING
STA. 26+20.00 LT.	PAVED 42.0 FT OPENING
STA. 30+29.80 LT.	PAVED 50.0 FT OPENING
STA. 61+12.50 LT.	PAVED 50.0 FT OPENING
STA. 62+00.00 LT.	PAVED 28.5 FT OPENING

CURVE DATA #3
PI = 29+75.35
D = 7°09'43.1"
Δ = 48°56'36.8" Rt.
R = 800.00'
L = 683.38'
T = 364.11'
E = 78.96'

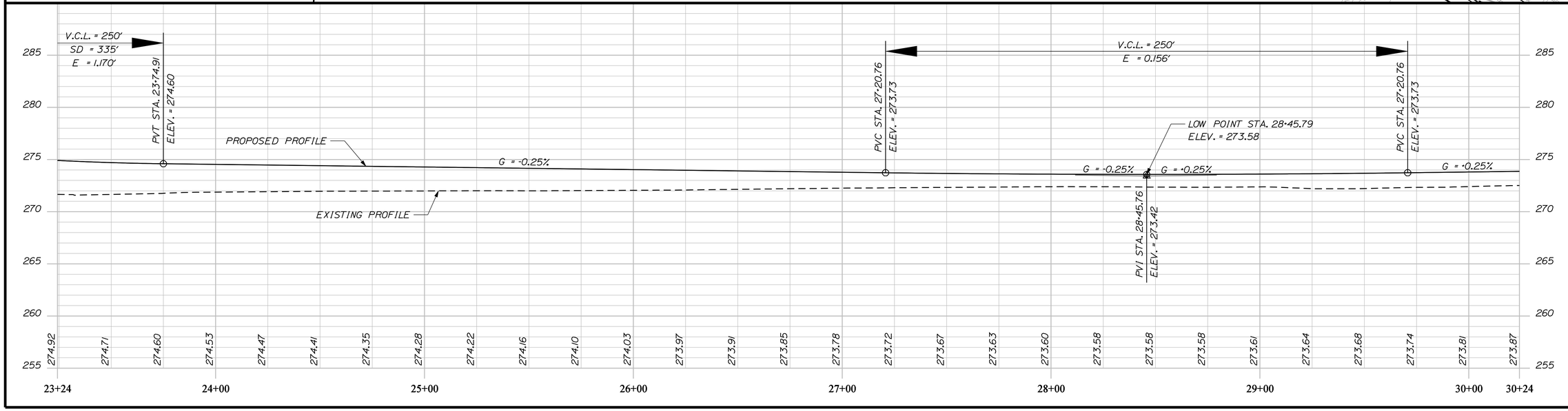

STA. 23+24.27 TO STA. 30+24.27

STATE OF MAINE
DEPARTMENT OF TRANSPORTATION

BH-A106(000)

PIN 11060.00

HIGHWAY PLANS

	BY	DATE	SIGNATURE
PROJ. MANAGER	J. Wentworth		
DESIGN-DETAILED	A. Mousseau	July 2010	
CHECKED-REVIEWED	bt-tron		
DESIGN2-DETAILED2			
DESIGN3-DETAILED3			
REVISIONS 1			
REVISIONS 2			
REVISIONS 3			
REVISIONS 4			
FIELD CHANGES			

P.E. NUMBER

DATE

NAPLES
ROUTES 11\302

PLANS

SHEET NUMBER
21
OF 160

Filename: ...\highway\rnsto\021_HDPLAN4.DGN Division: HIGHWAY Username: rhobe.moulton Date:7/26/2010

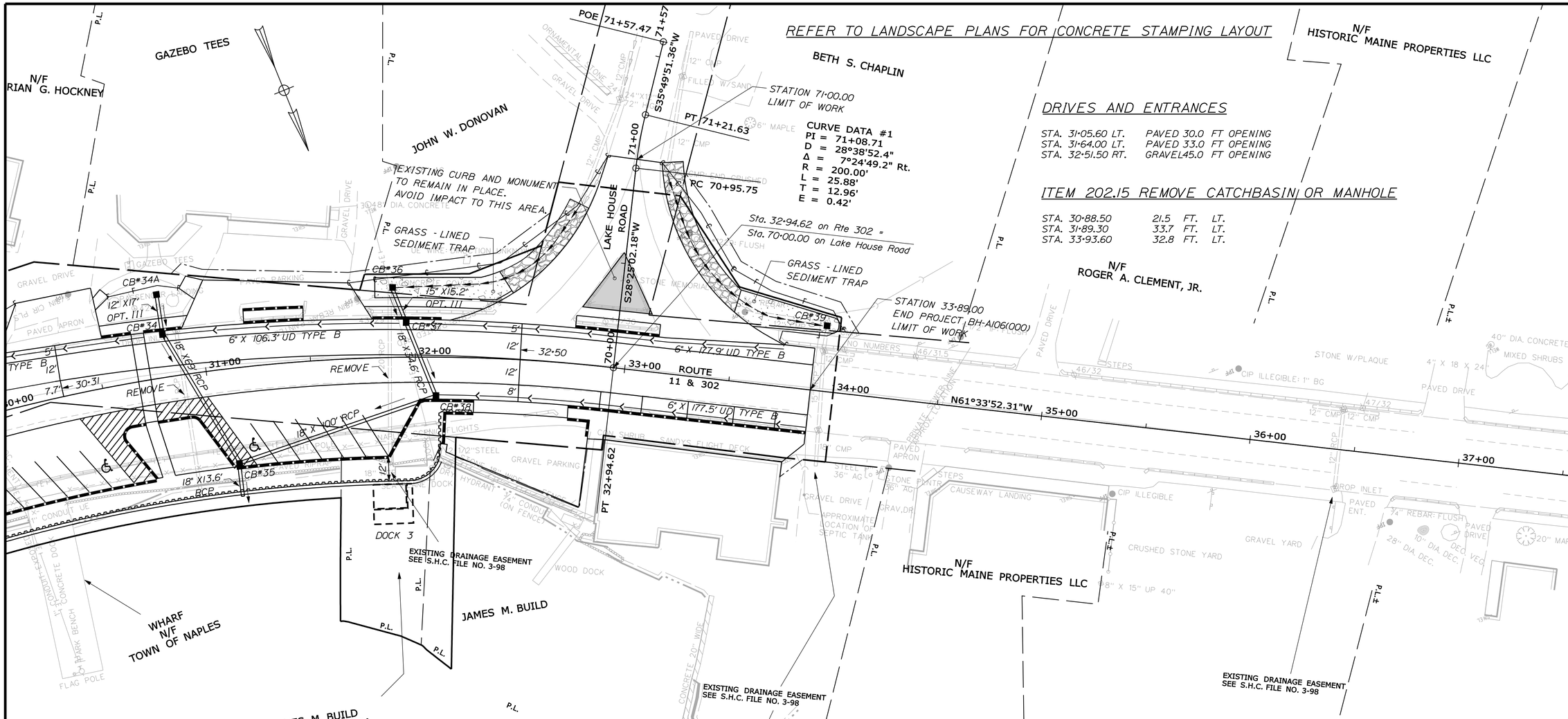

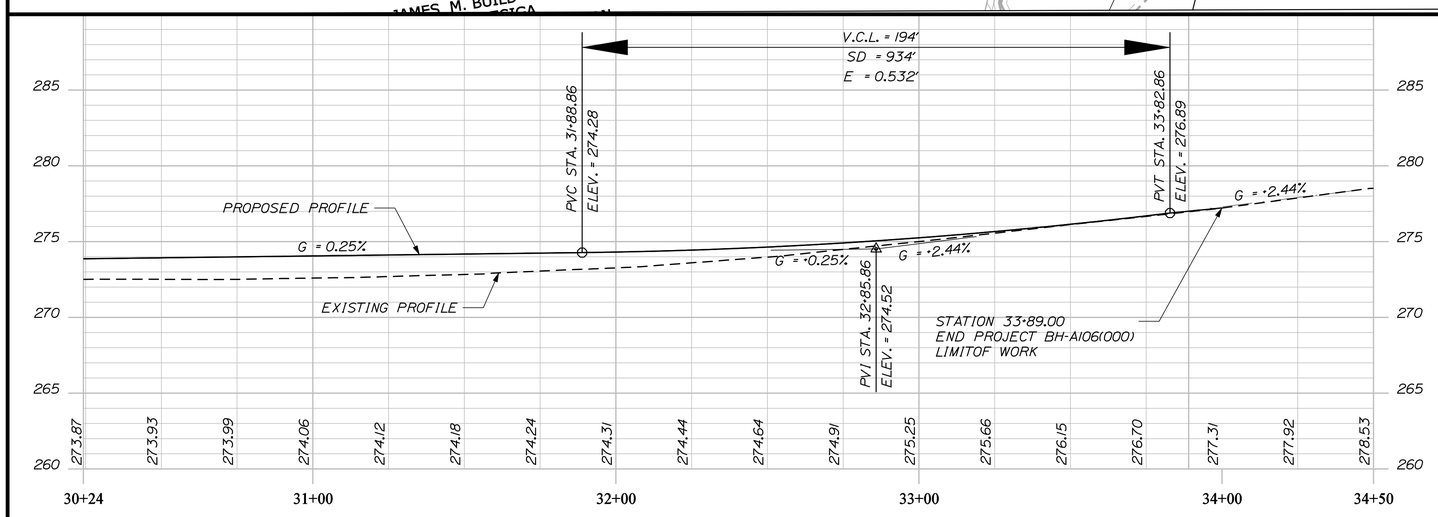

RTE. 302

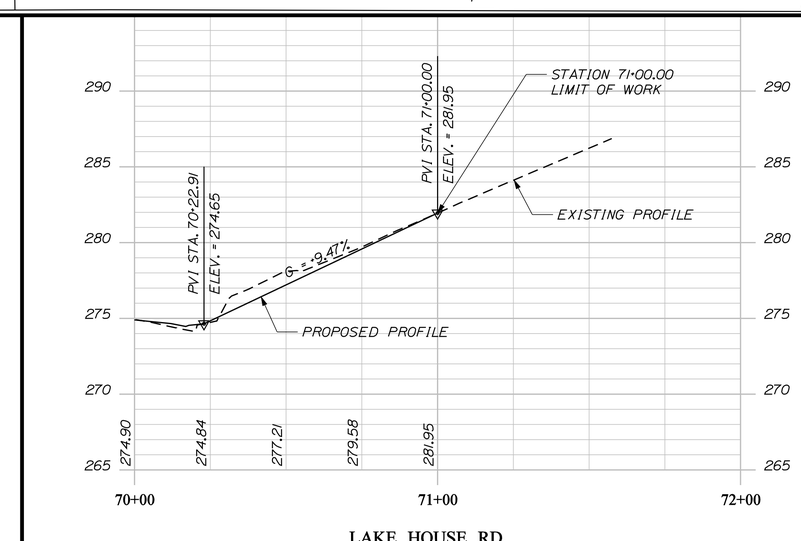

LAKE HOUSE RD.

STATE OF MAINE
DEPARTMENT OF TRANSPORTATION

BH-A106(000)

PIN 11060.00

HIGHWAY PLANS

	BY	DATE
PROJ. MANAGER	J. Wentworth	
DESIGN-DETAILED	A Mousseau	bt-tran	July 2010
CHECKED-REVIEWED		
DESIGN2-DETAILED2		
DESIGN3-DETAILED3		
REVISIONS 1		
REVISIONS 2		
REVISIONS 3		
REVISIONS 4		
FIELD CHANGES		

SIGNATURE

P.E. NUMBER

DATE

NAPLES
ROUTES 11\302

PLANS

SHEET NUMBER
22
OF 160

STA. 30+24.27 TO STA. 34+50.00

Filename: ...\highway\msta\022_HDPLAN5.DGN Division: HIGHWAY Username: rhobe.moulton Date:7/26/2010

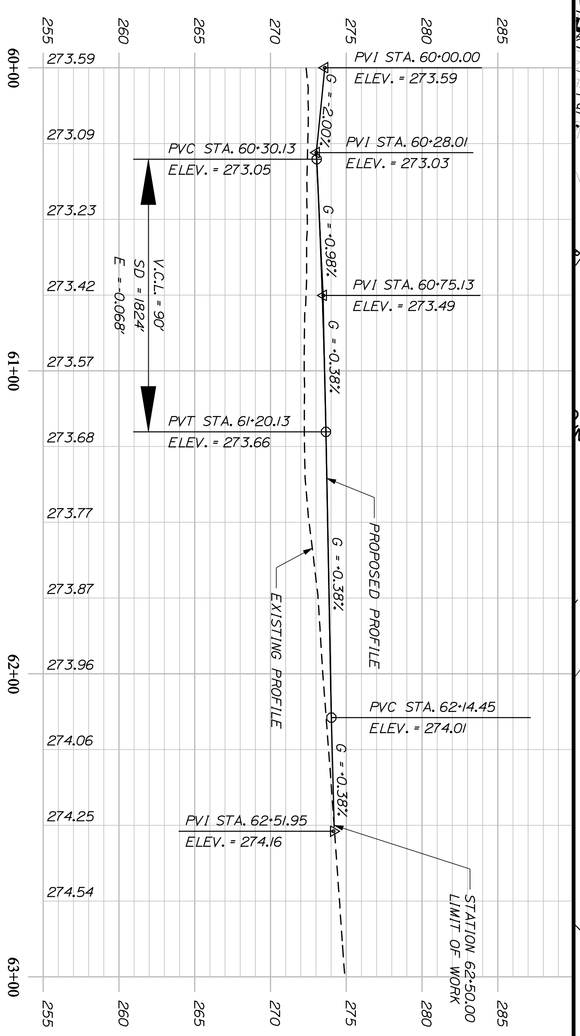

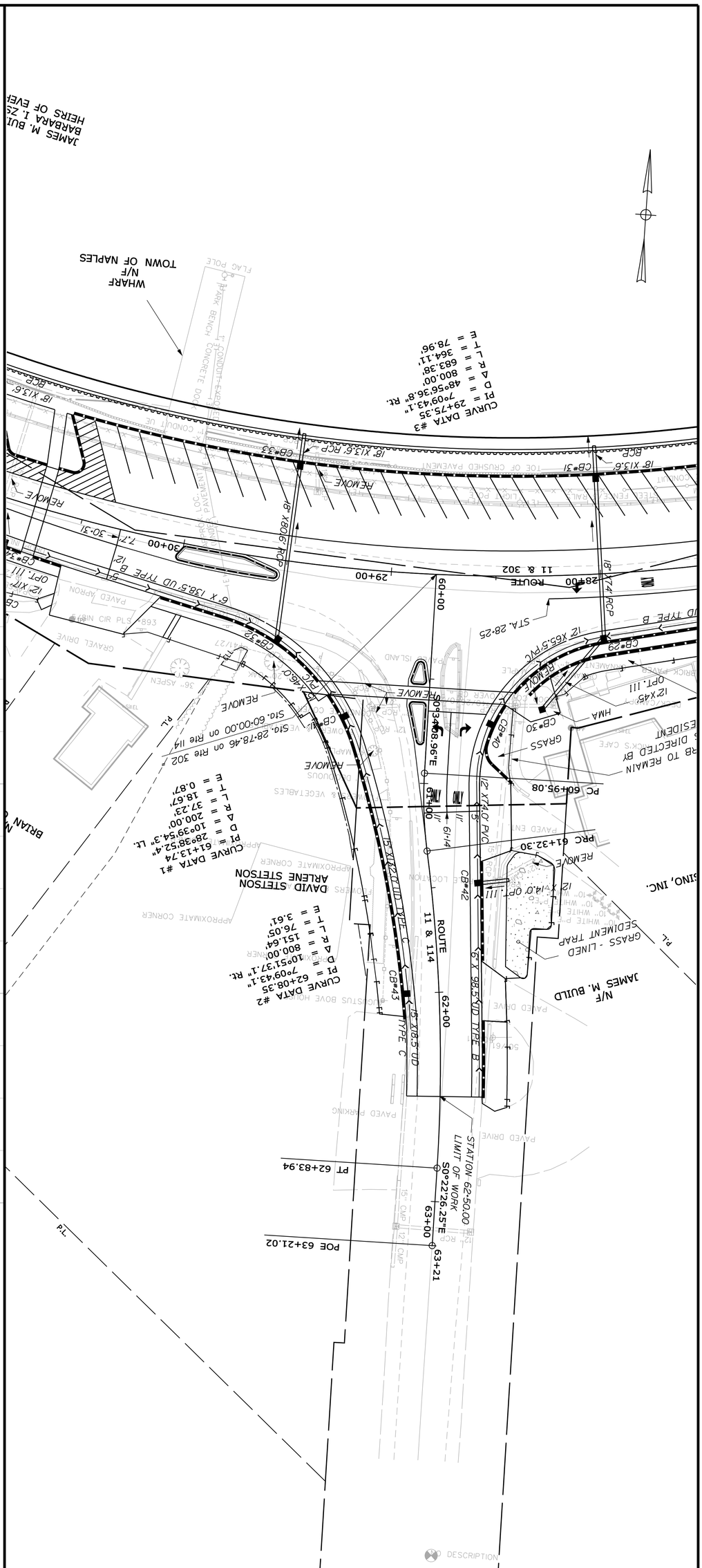

STA. 60+00.00 TO STA. 63+00.00

SHEET NUMBER 23 OF 160

NAPLES
ROUTES 11\302

PLANS

PROJ. MANAGER	J. Wentworth	BY	DATE
DESIGN-DETAILED	A Mousseau	bt-tran	July 2010
CHECKED-REVIEWED	_____	_____	_____
DESIGN2-DETAILED2	_____	__	_____
DESIGN3-DETAILED3	_____	_____	_____
REVISIONS 1	_____		_____
REVISIONS 2	_____		_____
REVISIONS 3	_____		_____
REVISIONS 4	_____		_____
FIELD CHANGES	_____		_____

SIGNATURE

P.E. NUMBER

DATE

STATE OF MAINE
DEPARTMENT OF TRANSPORTATION

BH-A106(000)

PIN 11060.00 HIGHWAY PLANS

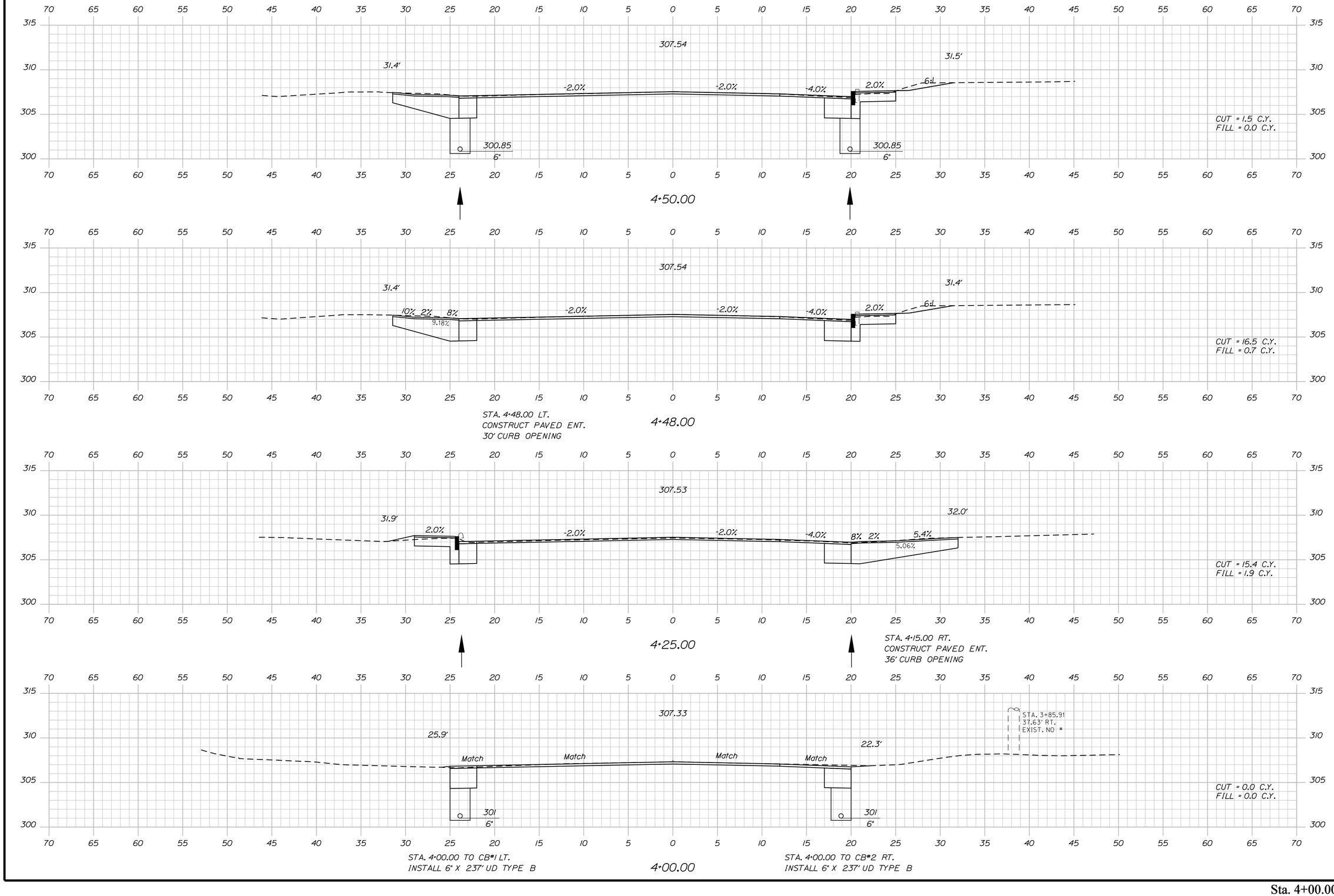

STATE OF MAINE
DEPARTMENT OF TRANSPORTATION

BH-A106(000)

PIN
11060.00

HIGHWAY PLANS

	BY	DATE
PROJ. MANAGER	J. Wentworth	
DESIGNDETAILED	A. Mousseau	July 2010
CHECKEDREVIEWED	bt-tron	-----
DESIGN2DETAILED2	-----	-----
DESIGN3DETAILED3	-----	-----
REVISIONS 1	-----	-----
REVISIONS 2	-----	-----
REVISIONS 3	-----	-----
REVISIONS 4	-----	-----
FIELD CHANGES	-----	-----

SIGNATURE

P.E. NUMBER

DATE

NAPLES
ROUTES 11\302

CROSS SECTIONS

SHEET NUMBER

24

OF 160

Sta. 4+00.00 to Sta. 4+50.00

Filename: ...\mst0\024_XSECT_4+00_001.dgn Division: HIGHWAY Username: mark.poulin Date:7/22/2010

STATE OF MAINE
DEPARTMENT OF TRANSPORTATION

BH-A106(000)

PIN
11060.00

HIGHWAY PLANS

	BY	DATE
PROJ. MANAGER	J. Wentworth	
DESIGNDETAILED	A. Mousseau	bt-tron July 2010
CHECKEDREVIEWED	-----	-----
DESIGNDETAILED2	-----	--
DESIGNDETAILED3	-----	-----
REVISIONS 1	-----	-----
REVISIONS 2	-----	-----
REVISIONS 3	-----	-----
REVISIONS 4	-----	-----
FIELD CHANGES	-----	-----

SIGNATURE

P.E. NUMBER

DATE

NAPLES
ROUTES 11\302

CROSS SECTIONS

SHEET NUMBER

25

OF 160

Sta. 4+95.00 to Sta. 5+50.00

Filename: ...\msto\025_XSECT_4+95_002.dgn Division: HIGHWAY Username: mark.poulin Date:7/22/2010

Filename: ...\mst0\026_XSECT_6+00_003.dgn Username: mark.poulin Division: HIGHWAY Date:7/22/2010

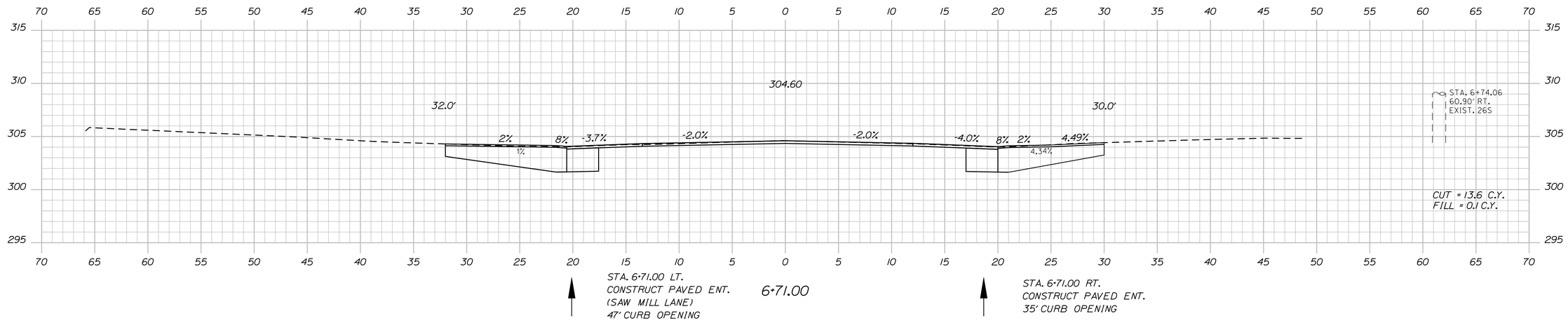

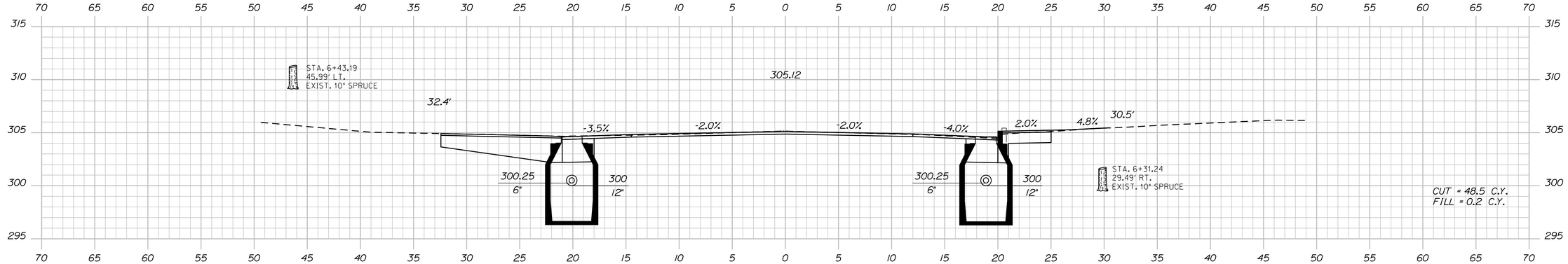

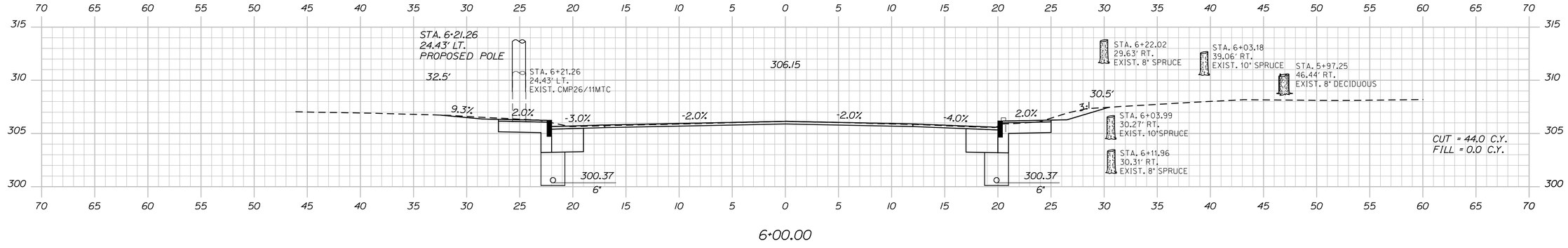

STATE OF MAINE
DEPARTMENT OF TRANSPORTATION

BH-A106(000)

PIN 11060.00

HIGHWAY PLANS

	BY	DATE
PROJ. MANAGER	J. Wentworth	
DESIGNDETAILED	A. Mousseau	July 2010
CHECKEDREVIEWED	-----	-----
DESIGN2DETAILED2	-----	-----
DESIGN3DETAILED3	-----	-----
REVISIONS 1	-----	-----
REVISIONS 2	-----	-----
REVISIONS 3	-----	-----
REVISIONS 4	-----	-----
FIELD CHANGES	-----	-----

SIGNATURE

P.E. NUMBER

DATE

NAPLES
ROUTES 11 \ 302

CROSS SECTIONS

SHEET NUMBER

26

OF 160

Sta. 6+00.00 to Sta. 6+71.00

Filename: ...\mslo\027_XSECT_7+00_004.dgn Division: HIGHWAY Username: mark.poulin Date:7/22/2010

STATE OF MAINE
DEPARTMENT OF TRANSPORTATION

BH-A106(000)

PIN
11060.00

HIGHWAY PLANS

	BY	DATE
PROJ. MANAGER	J. Wentworth	
DESIGNDETAILED	A. Mousseau	July 2010
CHECKEDREVIEWED	bt-tron	-----
DESIGN2DDETAILED02	-----	-----
DESIGN3DDETAILED03	-----	-----
REVISIONS 1	-----	-----
REVISIONS 2	-----	-----
REVISIONS 3	-----	-----
REVISIONS 4	-----	-----
FIELD CHANGES	-----	-----

SIGNATURE

P.E. NUMBER

DATE

NAPLES
ROUTES 11\302

CROSS SECTIONS

SHEET NUMBER

27

OF 160

Sta. 7+00.00 to Sta. 7+50.00

Filename: ...\msto\028_XSECT_8+00_005.dgn Username: mark.poulin Division: HIGHWAY Date:7/22/2010

STATE OF MAINE
DEPARTMENT OF TRANSPORTATION

BH-A106(000)

PIN
11060.00

HIGHWAY PLANS

	BY	DATE
PROJ. MANAGER	J. Wentworth	
DESIGNDETAILED	A. Mousseau	July 2010
CHECKEDREVIEWED	bt-tron	
DESIGNDETAILED2		
DESIGNDETAILED3		
REVISIONS 1		
REVISIONS 2		
REVISIONS 3		
REVISIONS 4		
FIELD CHANGES		

SIGNATURE

P.E. NUMBER

DATE

NAPLES
ROUTES 11\302

CROSS SECTIONS

SHEET NUMBER

28

OF 160

Sta. 8+00.00 to Sta. 9+00.00

Filename: ...\mslo\029_XSECT_9+50_006.dgn Division: HIGHWAY Username: mark.poulin Date:7/22/2010

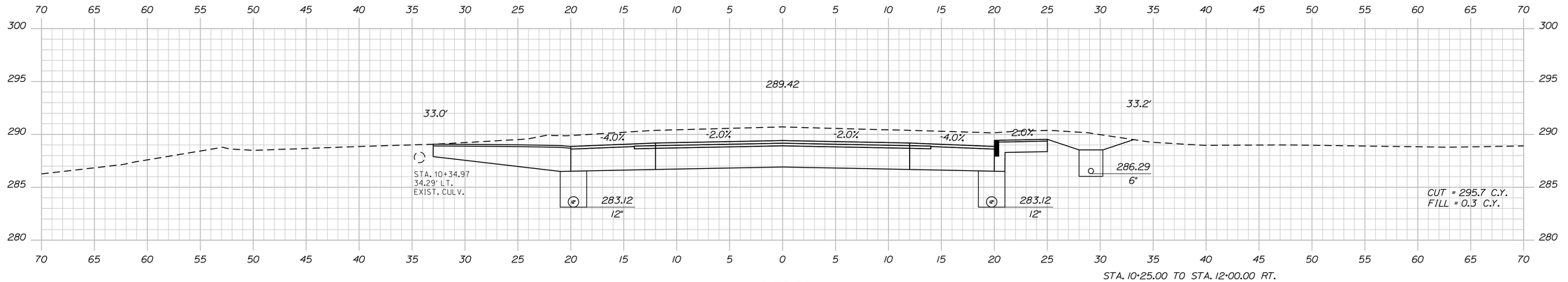

10+50.00

STA. 10+25.00 TO STA. 12+00.00 RT.
CONSTRUCT UNDERDRAIN
DITCH SOIL FILTER
(SEE SPECIAL PROVISIONS)

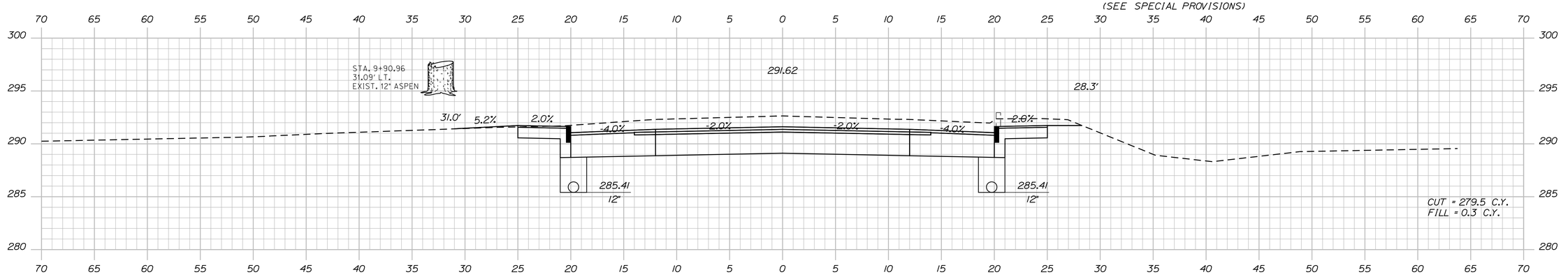

10+00.00

STA. 10+25.00, 20' RT.
CONSTRUCT CONCRETE
SIDEWALK CULVERT

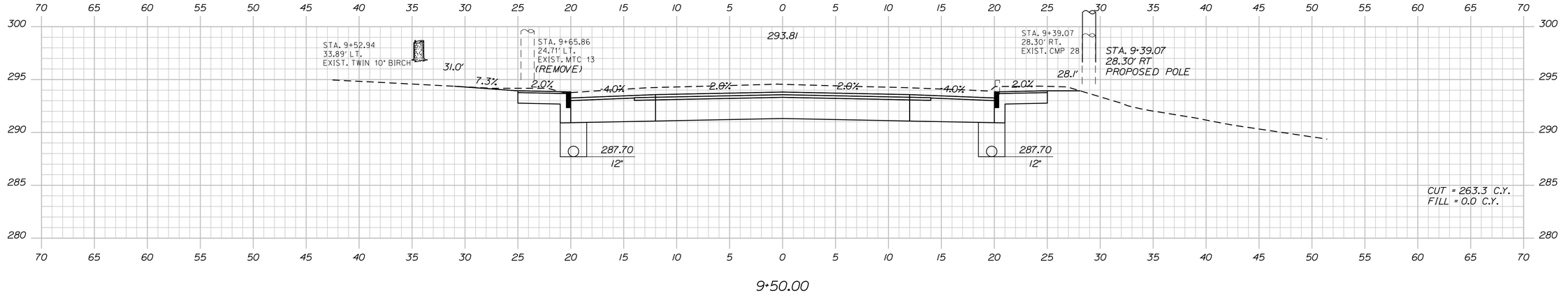

9+50.00

STATE OF MAINE
DEPARTMENT OF TRANSPORTATION

BH-A106(000)

PIN
11060.00

HIGHWAY PLANS

	BY	DATE
PROJ. MANAGER	J. Wentworth	
DESIGNDETAILED	A. Mousseau	July 2010
CHECKEDREVIEWED	bl-tron	
DESIGN2DETAILED2		
DESIGN3DETAILED3		
REVISIONS 1		
REVISIONS 2		
REVISIONS 3		
REVISIONS 4		
FIELD CHANGES		

SIGNATURE

P.E. NUMBER

DATE

NAPLES
ROUTES 11\302

CROSS SECTIONS

SHEET NUMBER

29

OF 160

Sta. 9+50.00 to Sta. 10+50.00

Filename: ...\msto\030_XSECT_10-60_007.dgn Division: HIGHWAY Username: mark.poulin Date:7/22/2010

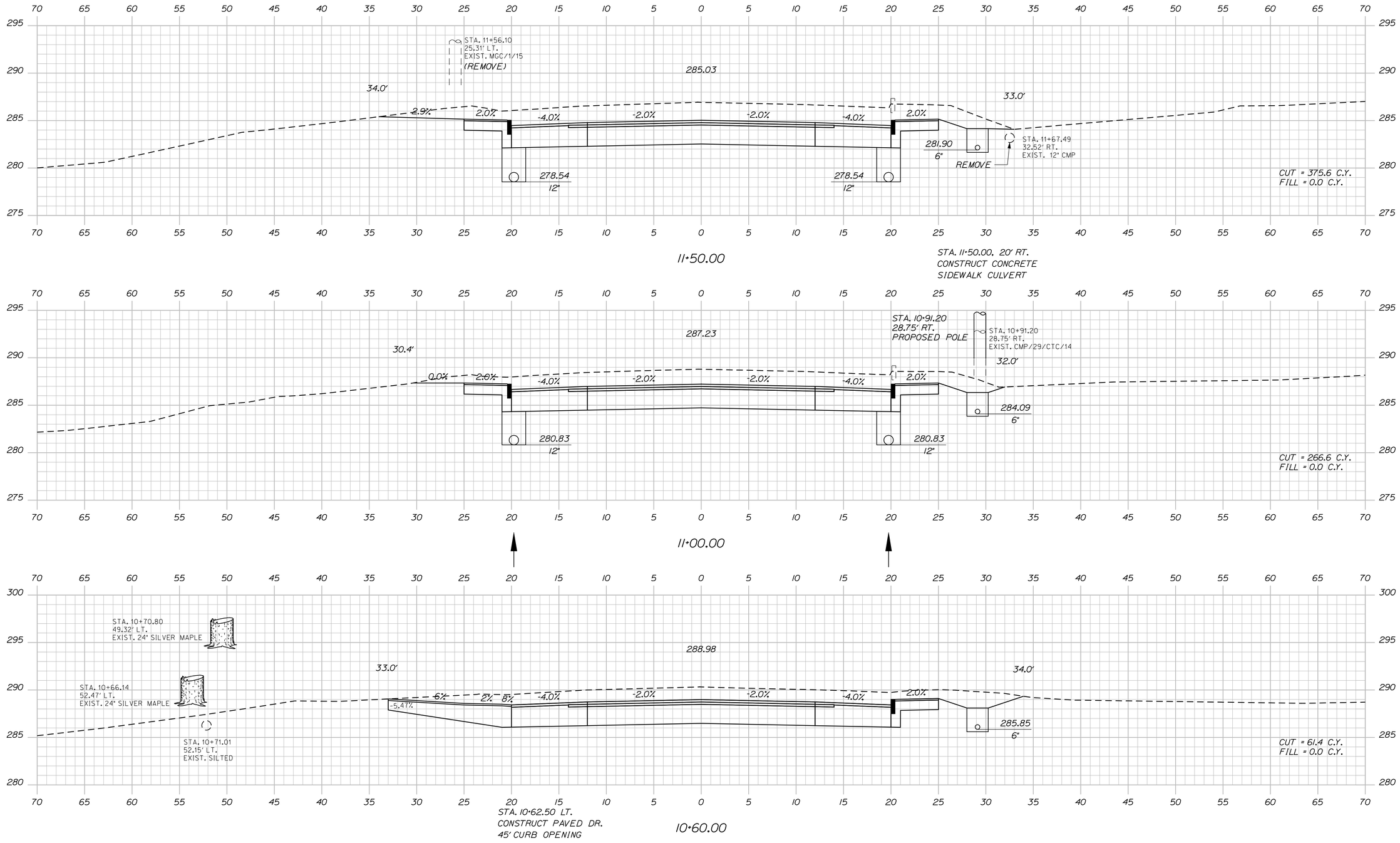

STATE OF MAINE
DEPARTMENT OF TRANSPORTATION

BH-A106(000)

PIN 11060.00

HIGHWAY PLANS

PROJ. MANAGER	J. Wentworth		
DESIGNDETAILED	A. Mousseau	bt-tron	July 2010
CHECKEDREVIEWED	-----	-----	-----
DESIGN2DETAILED2	-----	-----	-----
DESIGN3DETAILED3	-----	-----	-----
REVISIONS 1	-----	-----	-----
REVISIONS 2	-----	-----	-----
REVISIONS 3	-----	-----	-----
REVISIONS 4	-----	-----	-----
FIELD CHANGES	-----	-----	-----

SIGNATURE

P.E. NUMBER

DATE

NAPLES
ROUTES 11\302

CROSS SECTIONS

SHEET NUMBER

30

OF 160

Sta. 10+60.00 to Sta. 11+50.00

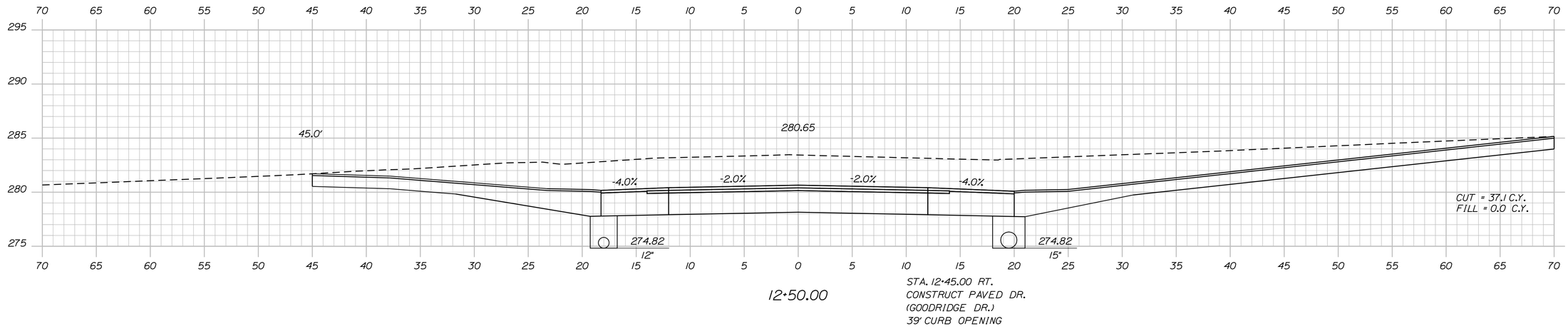

12+50.00

STA. 12+45.00 RT.
CONSTRUCT PAVED DR.
(GOODRIDGE DR.)
39' CURB OPENING

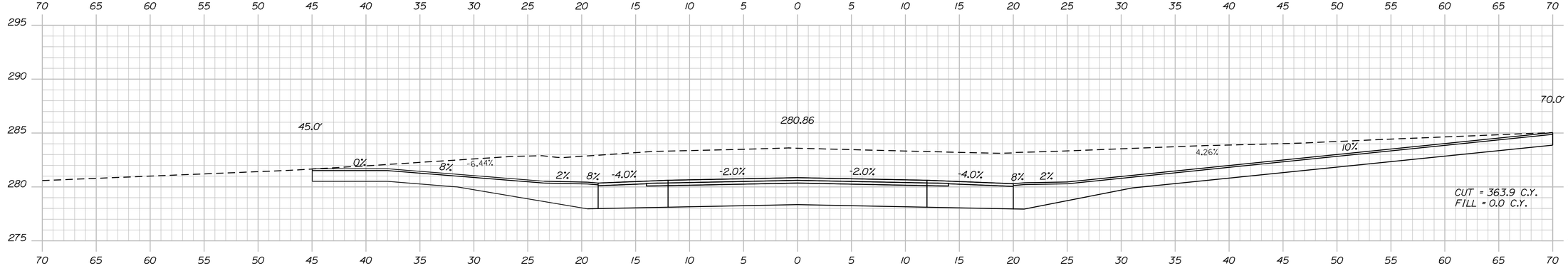

STA. 12+44.50 LT.
CONSTRUCT PAVED DR.
39' CURB OPENING

12+45.00

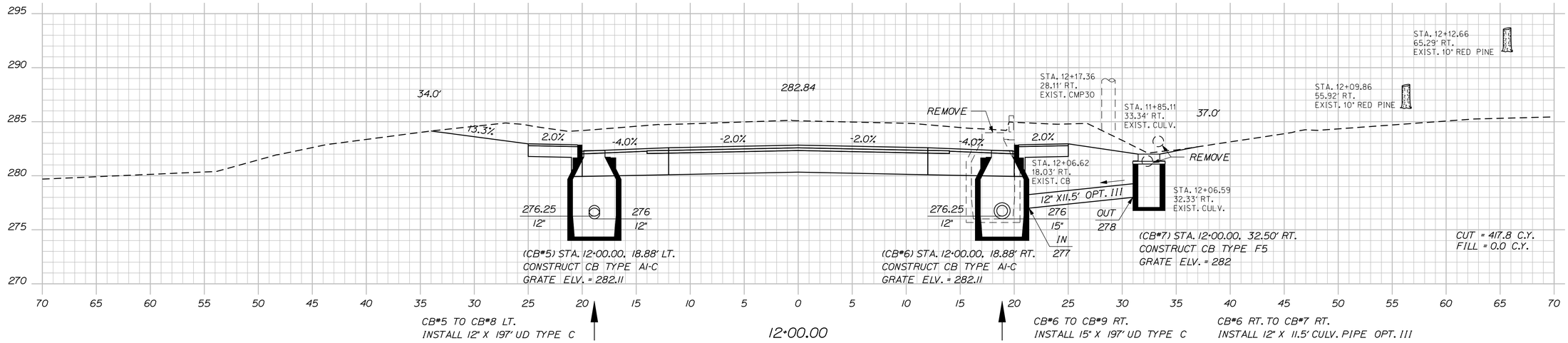

(CB*5) STA. 12+00.00, 18.88' LT.
CONSTRUCT CB TYPE A1-C
GRATE ELV. = 282.11

(CB*6) STA. 12+00.00, 18.88' RT.
CONSTRUCT CB TYPE A1-C
GRATE ELV. = 282.11

(CB*7) STA. 12+00.00, 32.50' RT.
CONSTRUCT CB TYPE F5
GRATE ELV. = 282

CB*5 TO CB*8 LT.
INSTALL 12" X 197' UD TYPE C

12+00.00

CB*6 TO CB*9 RT.
INSTALL 15" X 197' UD TYPE C

CB*6 RT. TO CB*7 RT.
INSTALL 12" X 11.5' CULV. PIPE OPT. III

STATE OF MAINE
DEPARTMENT OF TRANSPORTATION

BH-A106(000)

PIN
11060.00

HIGHWAY PLANS

	BY	DATE
PROJ. MANAGER	J. Wentworth	
DESIGNDETAILED	A. Mousseau	July 2010
CHECKEDREVIEWED	bt-tron	------
DESIGN2DETAILED2	-----	------
DESIGN3DETAILED3	-----	------
REVISIONS 1	-----	------
REVISIONS 2	-----	------
REVISIONS 3	-----	------
REVISIONS 4	-----	------
FIELD CHANGES	-----	------

SIGNATURE

P.E. NUMBER

DATE

NAPLES
ROUTES 11\302

CROSS SECTIONS

SHEET NUMBER

31

OF 160

Sta. 12+00.00 to Sta. 12+50.00

Filename: ...\mst0\031_XSECT_12+00_008.dgn Division: HIGHWAY Username: mark.poulin Date:7/22/2010

Filename: ...\mslo\032_XSECT_13+00_009.dgn Username: mark.poulin Division: HIGHWAY Date:7/22/2010

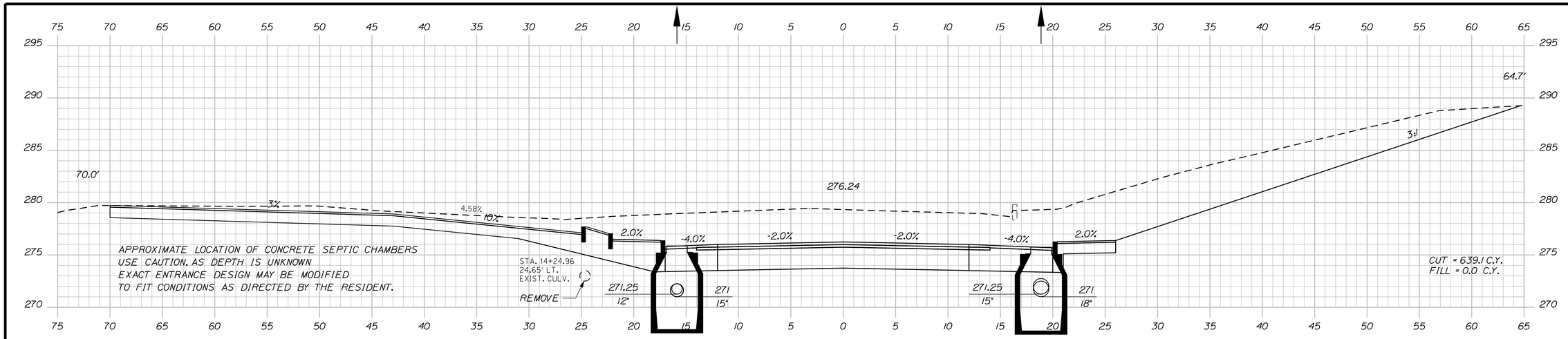

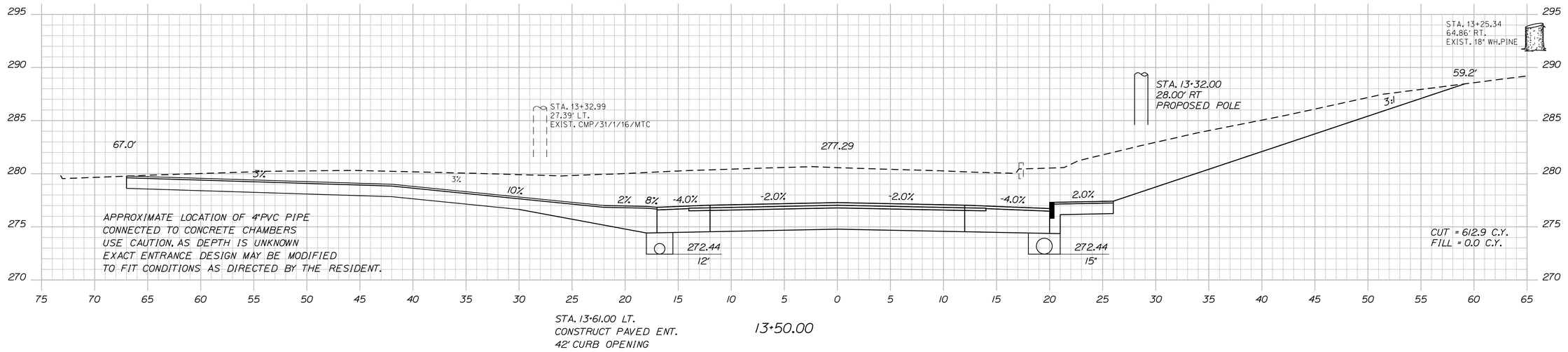

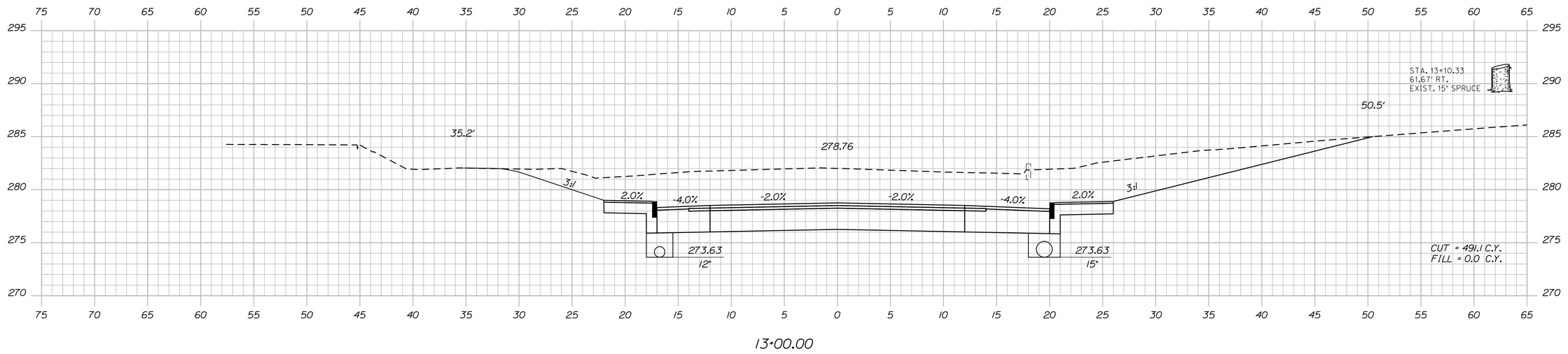

STATE OF MAINE
DEPARTMENT OF TRANSPORTATION

BH-A106(000)

PIN 11060.00

HIGHWAY PLANS

PROJ. MANAGER	J. Wentworth		
DESIGNDETAILED	A. Mousseau	bt-tron	July 2010
CHECKEDREVIEWED	-----	-----	-----
DESIGN2DETAILED2	-----	-----	-----
DESIGN3DETAILED3	-----	-----	-----
REVISIONS 1	-----	-----	-----
REVISIONS 2	-----	-----	-----
REVISIONS 3	-----	-----	-----
REVISIONS 4	-----	-----	-----
FIELD CHANGES	-----	-----	-----

SIGNATURE

P.E. NUMBER

DATE

NAPLES
ROUTES 11\302

CROSS SECTIONS

SHEET NUMBER

32

OF 160

Sta. 13+00.00 to Sta. 14+00.00

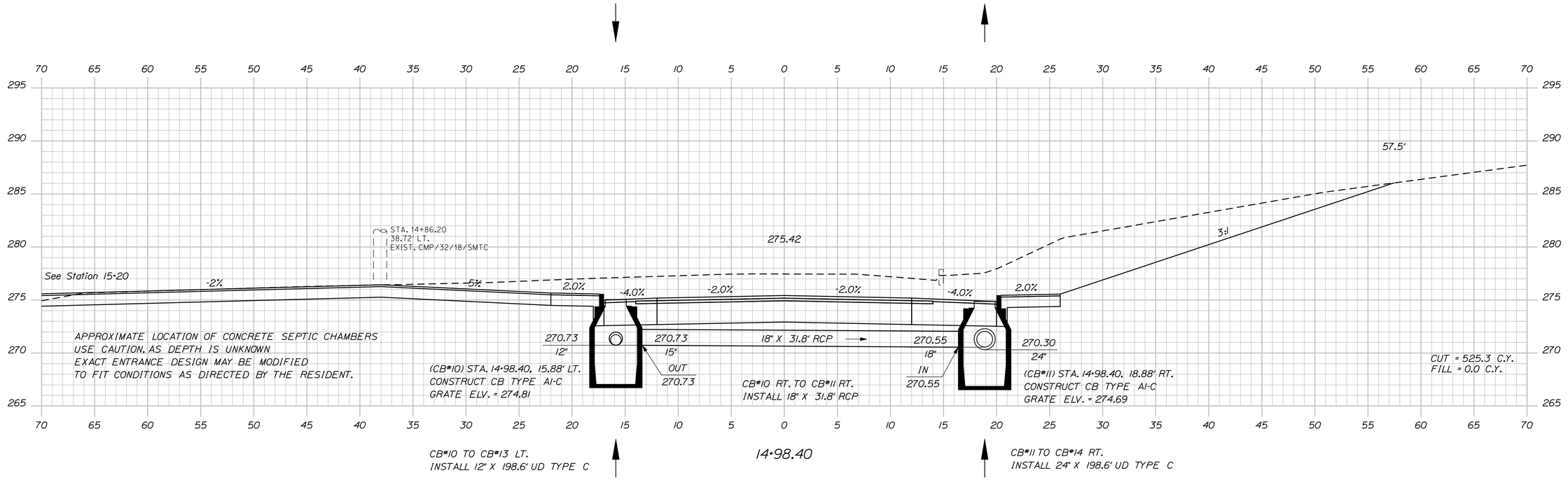

STATE OF MAINE
DEPARTMENT OF TRANSPORTATION

BH-A106(000)

PIN
11060.00

HIGHWAY PLANS

	BY	DATE
PROJ. MANAGER	J. Wentworth	
DESIGNDETAILED	A. Mousseau	July 2010
CHECKEDREVIEWED	bt-tron	-----
DESIGN2DETAILED2	-----	-----
DESIGN3DETAILED3	-----	-----
REVISIONS 1	-----	-----
REVISIONS 2	-----	-----
REVISIONS 3	-----	-----
REVISIONS 4	-----	-----
FIELD CHANGES	-----	-----

SIGNATURE

P.E. NUMBER

DATE

NAPLES
ROUTES 11\302

CROSS SECTIONS

SHEET NUMBER

33

OF 160

Sta. 14+50.00 to Sta. 14+98.40

Filename: ...\mslo\033_XSECT_14+50_010.dgn Division: HIGHWAY Username: mark.poulin Date:7/22/2010

Filename: ...\mslo\034_XSECT_15-00_011.dgn Division: HIGHWAY Username: mark.poulin Date:7/22/2010

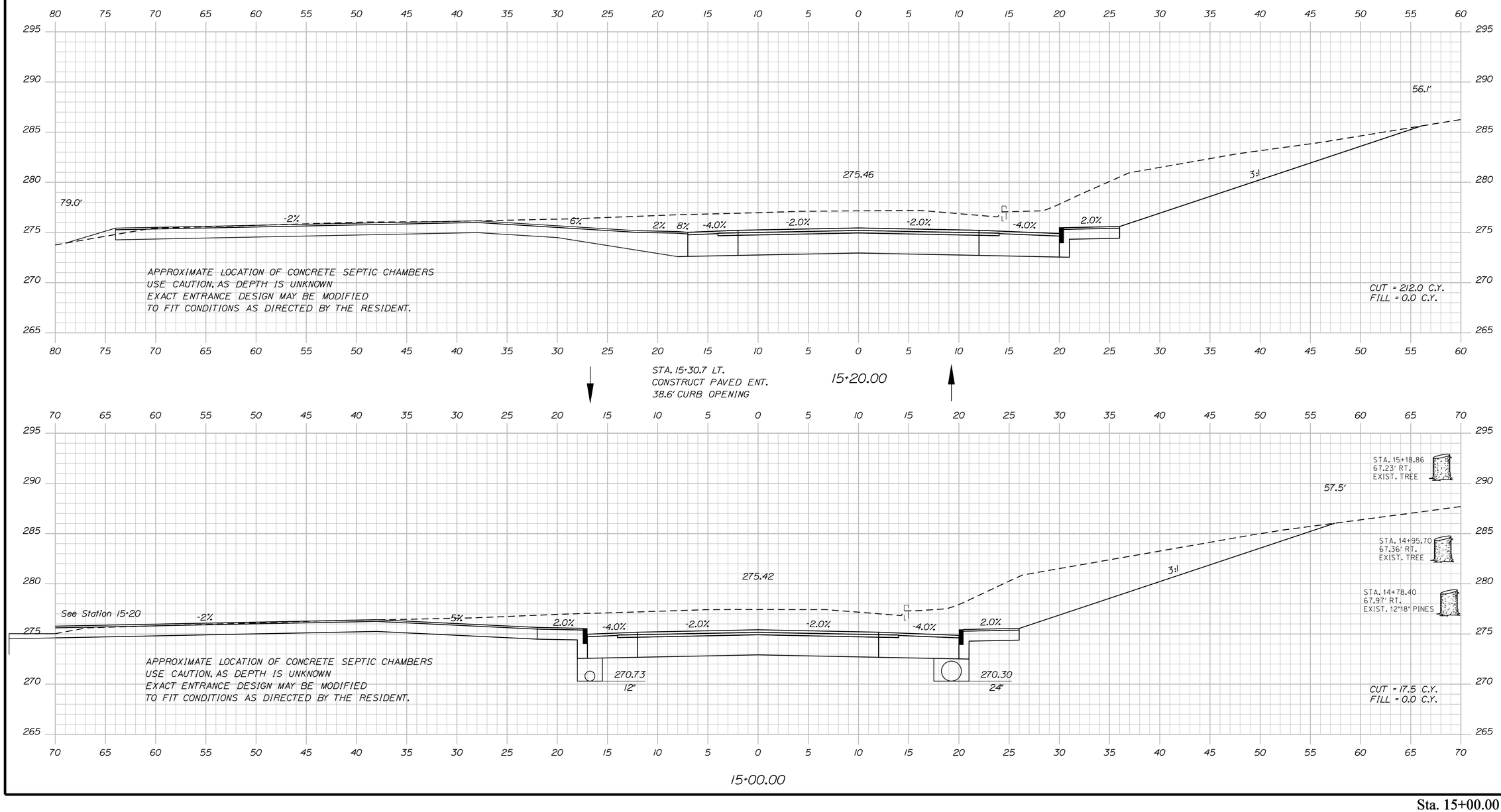

STATE OF MAINE
DEPARTMENT OF TRANSPORTATION

BH-A106(000)

PIN
11060.00

HIGHWAY PLANS

PROJ. MANAGER	J. Wentworth	BY	DATE
DESIGNDETAILED	A. Mousseau	bt-tron	July 2010
CHECKEDREVIEWED	-----	-----	-----
DESIGNDETAILED2	-----	--	-----
DESIGNDETAILED3	-----	-----	-----
REVISIONS 1	-----	-----	-----
REVISIONS 2	-----	-----	-----
REVISIONS 3	-----	-----	-----
REVISIONS 4	-----	-----	-----
FIELD CHANGES	-----	-----	-----

SIGNATURE

P.E. NUMBER

DATE

NAPLES
ROUTES 11\302

CROSS SECTIONS

SHEET NUMBER

34

OF 160

Sta. 15+00.00 to Sta. 15+20.00

Filename: ...\mslo\035_XSECT_15+50_012.dgn Division: HIGHWAY Username: mark.poulin Date:7/22/2010

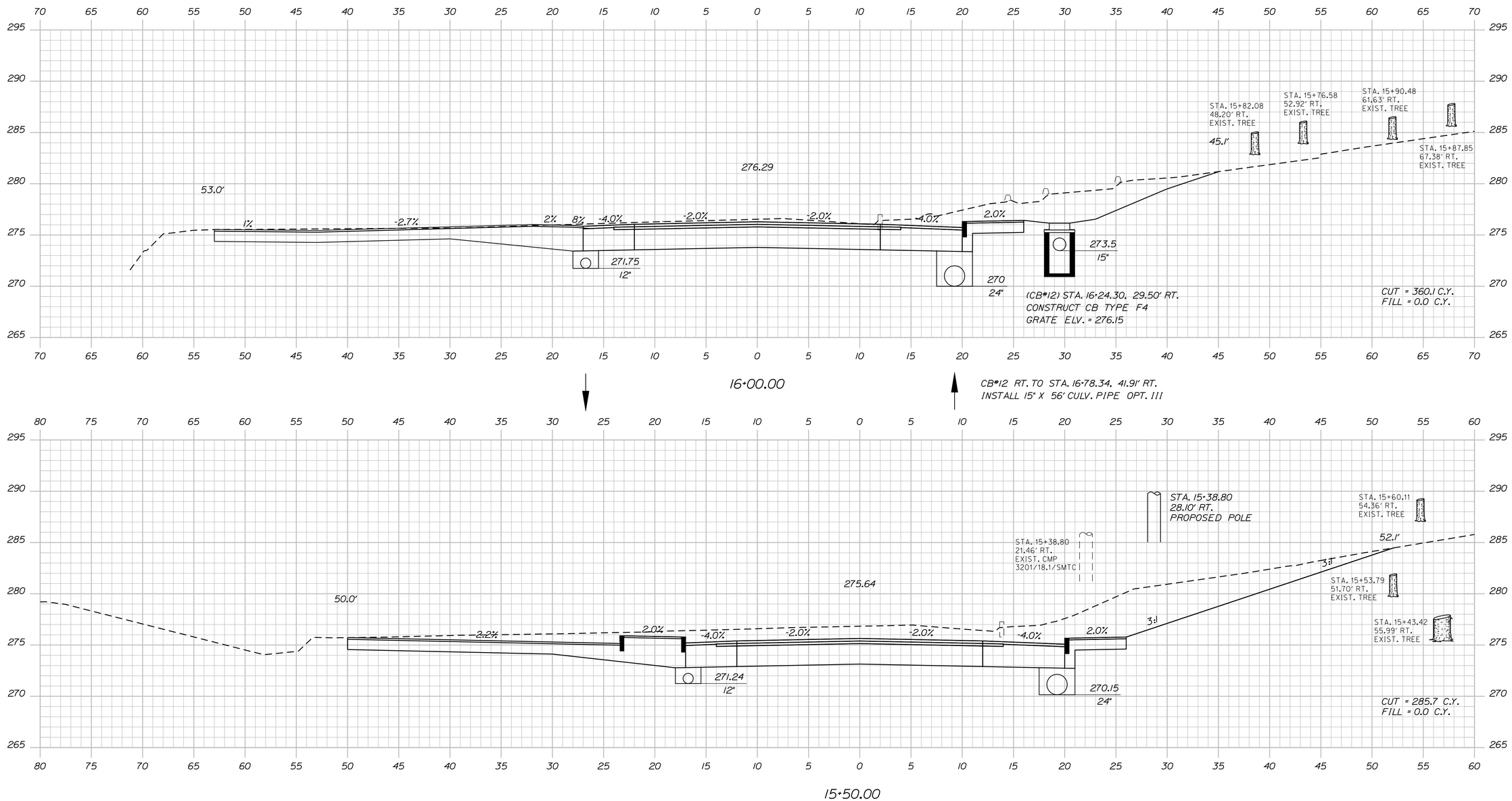

STATE OF MAINE
DEPARTMENT OF TRANSPORTATION

BH-A106(000)

PIN
11060.00

HIGHWAY PLANS

	BY	DATE
PROJ. MANAGER	J. Wentworth	
DESIGNDETAILED	A. Mousseau	July 2010
CHECKEDREVIEWED	bt-tron	-----
DESIGN2DETAILED2	-----	-----
DESIGN3DETAILED3	-----	-----
REVISIONS 1	-----	-----
REVISIONS 2	-----	-----
REVISIONS 3	-----	-----
REVISIONS 4	-----	-----
FIELD CHANGES	-----	-----

SIGNATURE

P.E. NUMBER

DATE

NAPLES
ROUTES 11\302

CROSS SECTIONS

SHEET NUMBER

35

OF 160

Sta. 15+50.00 to Sta. 16+00.00

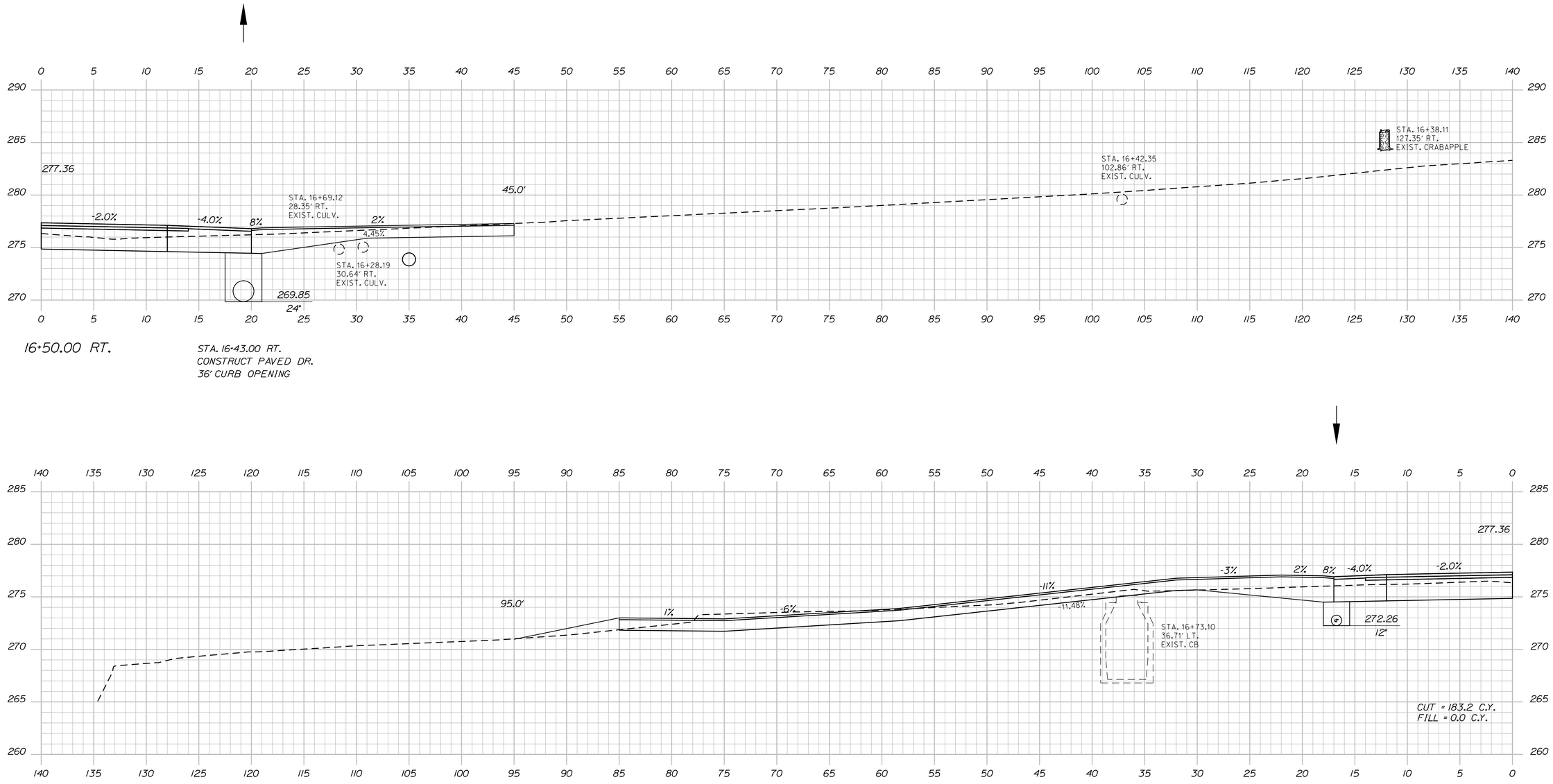

STATE OF MAINE
DEPARTMENT OF TRANSPORTATION

BH-A106(000)

PIN
11060.00

HIGHWAY PLANS

PROJ. MANAGER	J. Wentworth		
DESIGNDETAILED	A. Mousseau	bt-tron	July 2010
CHECKEDREVIEWED	-----	-----	-----
DESIGN2DETAILED2	-----	--	-----
DESIGN3DETAILED3	-----	----------	-----
REVISIONS 1	-----	-----	-----
REVISIONS 2	-----	-----	-----
REVISIONS 3	-----	-----	-----
REVISIONS 4	-----	-----	-----
FIELD CHANGES	-----	-----	-----

SIGNATURE

P.E. NUMBER

DATE

NAPLES
ROUTES 11\302

CROSS SECTIONS

SHEET NUMBER

36

OF 160

Sta. 16+50.00

Username: mark.poulin Date:7/22/2010 Division: HIGHWAY Filename: ...\036_XSECT_16+50 LT_013.dgn

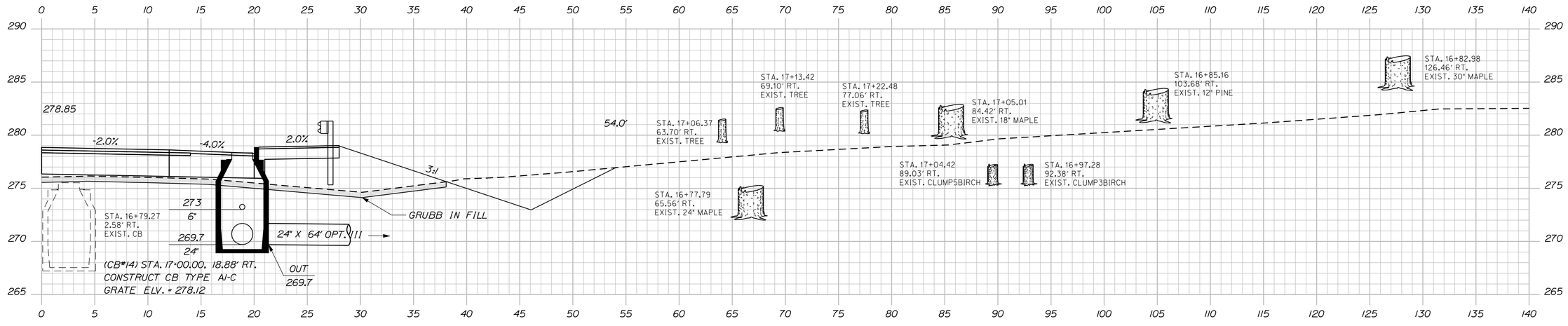

17+00.00 RT.

CB#14 TO STA.18+50.00 RT.
INSTALL 6" X 148.5' UD TYPE B

CB#14 RT. TO STA.17+47.50, 59.5' RT.
INSTALL 24" X 64' CULV. PIPE OPT. III

STA. 18+47.17 RT.
INSTALL BRIDGE TRANSITION TYPE I

STA. 17+01.92 TO STA. 18+47.17 RT.
INSTALL 150' (12 BEAMS) GUARDRAIL TYPE 3C - SINGLE RAIL

STA. 16+64.36 TO STA. 17+01.92 RT.
INSTALL 350 FLARED TERMINAL

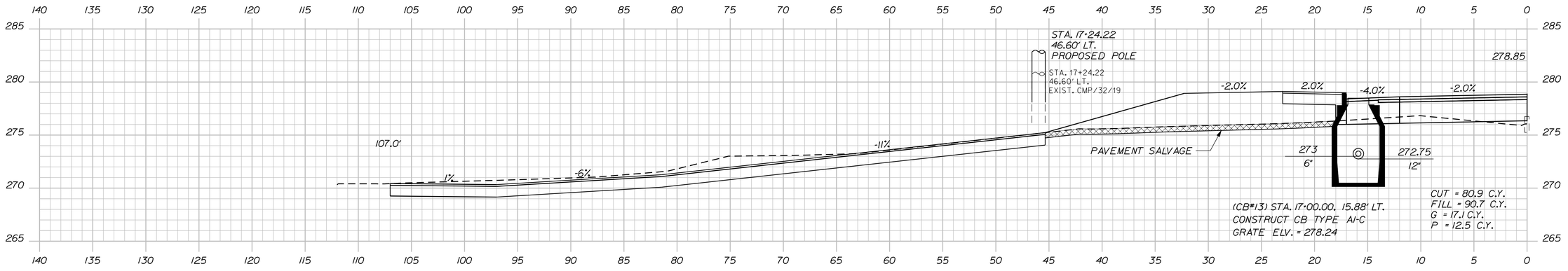

CB#13 TO STA.18+50.00 LT.
INSTALL 6" X 148.5' UD TYPE B

17+00.00 LT.

NOTE:
G = GRUBBING IN FILL
P = PAVEMENT SALVAGE

STATE OF MA"E
DEPARTMENT OF TRANSPORTATION

BH-A106(000)

P"
$P"NUMBER$

HIGHWAY PLANS

PROJ. MANAGER	J. Wentworth	BY	DATE
DESIGNDETAILED	A. Moussaou	bt-tron	July 2010
CHECKEDREVIEWED	-----	-----	-----
DESIGN2DETAILED2	-----	--	-----
DESIGN3DETAILED3	-----	-----	-----
REVISIONS 1	-----	-----	-----
REVISIONS 2	-----	-----	-----
REVISIONS 3	-----	-----	-----
REVISIONS 4	-----	-----	-----
FIELD CHANGES	-----	-----	-----

SIGNATURE

P.E. NUMBER

DATE

NAPLES
ROUTES 11\302

CROSS SECTIONS

SHEET NUMBER

37

OF 160

Sta. 17+00.00

Filename: ...\037_XSECT_17+00 LT_014.dgn Division: HIGHWAY Username: mark.poulin Date:7/22/2010

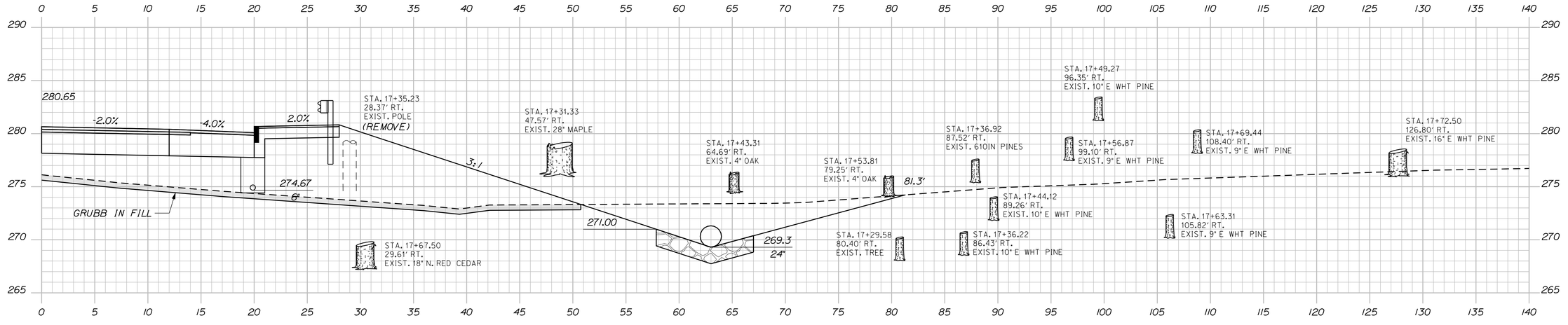

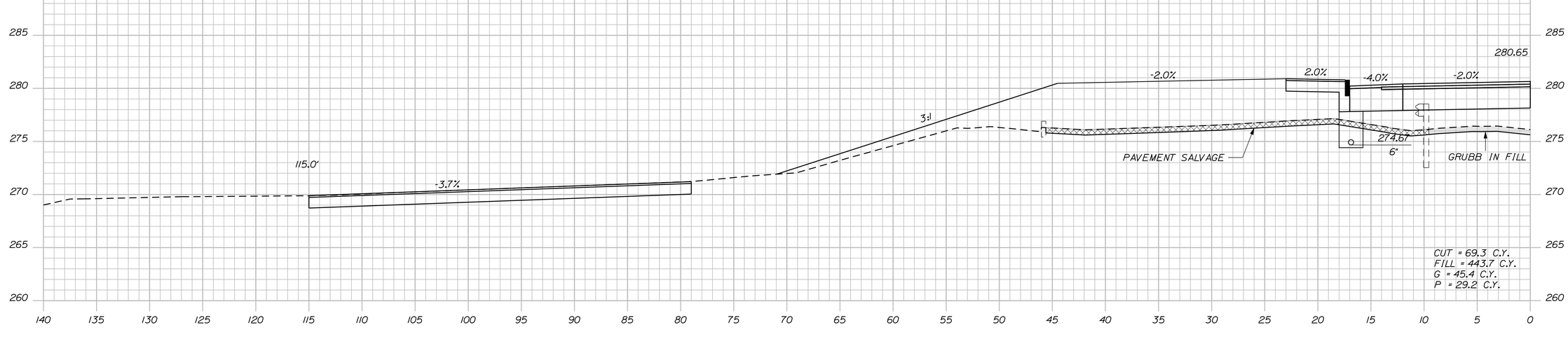

STATE OF MAINE
DEPARTMENT OF TRANSPORTATION

BH-A106(000)

PIN
11060.00

HIGHWAY PLANS

	BY	DATE
PROJ. MANAGER	J. Wentworth	
DESIGNDETAILED	A. Mousseau	July 2010
CHECKEDREVIEWED	bt-tron	------
DESIGN2DETAILED2	-----	------
DESIGN3DETAILED3	-----	------
REVISIONS 1	-----	------
REVISIONS 2	-----	------
REVISIONS 3	-----	------
REVISIONS 4	-----	------
FIELD CHANGES	-----	------

SIGNATURE

P.E. NUMBER

DATE

NAPLES
ROUTES 11\302

CROSS SECTIONS

SHEET NUMBER

38

OF 160

Sta. 17+50.00

Filename: ...\038_XSECT_17+50 LT_015.dgn Division: HIGHWAY Username: mark.poulin Date:7/22/2010

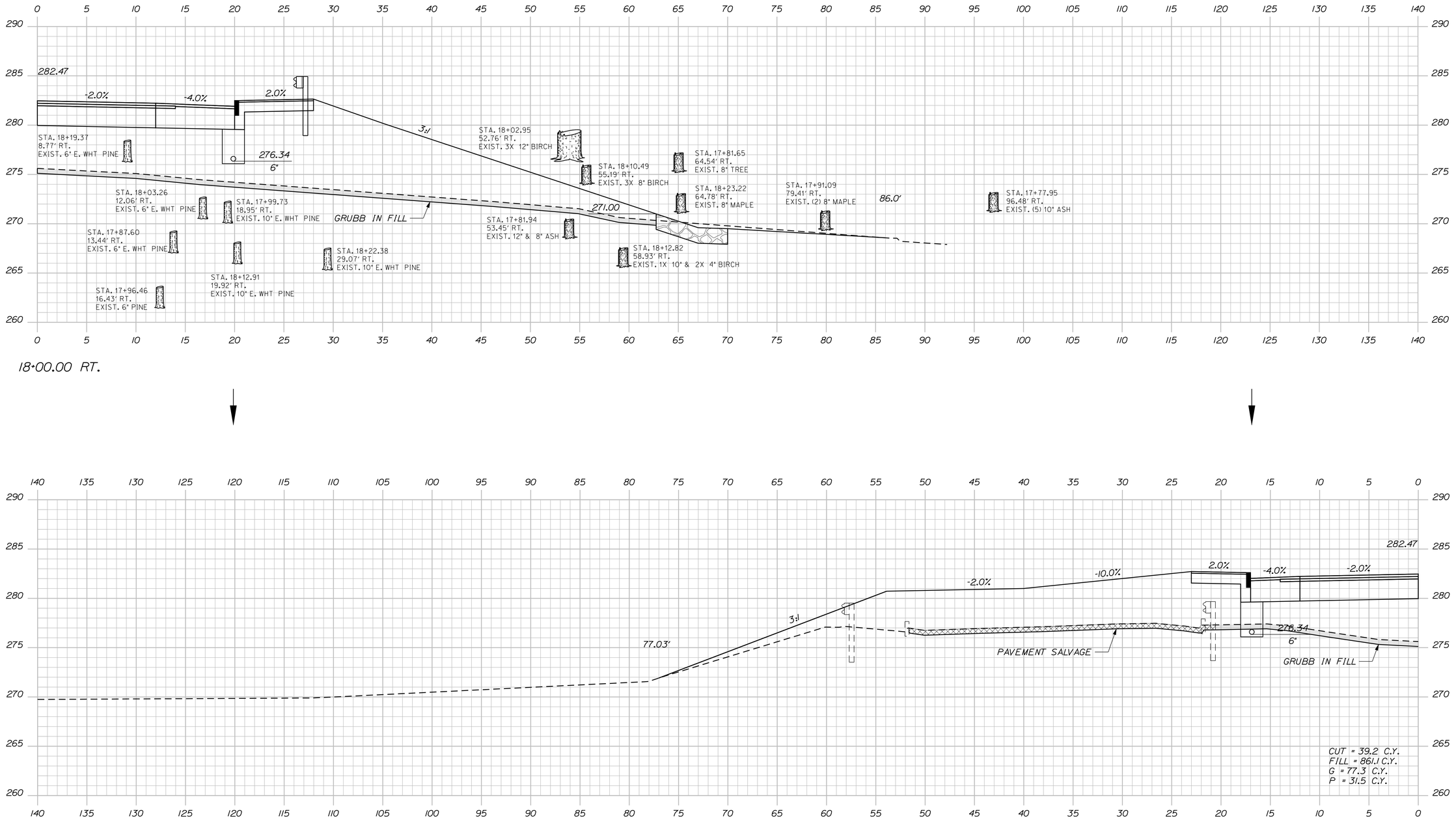

STATE OF MAINE
DEPARTMENT OF TRANSPORTATION

BH-A106(000)

PIN
11060.00

HIGHWAY PLANS

PROJ. MANAGER	J. Wentworth	BY	DATE
DESIGNDETAILED	A. Moussaou	bt-tron	July 2010
CHECKEDREVIEWED	-----	-----	-----
DESIGN2DETAILED2	-----	--	-----
DESIGN3DETAILED3	-----	----------	-----
REVISIONS 1	-----	-----	-----
REVISIONS 2	-----	-----	-----
REVISIONS 3	-----	-----	-----
REVISIONS 4	-----	-----	-----
FIELD CHANGES	-----	-----	-----

SIGNATURE

P.E. NUMBER

DATE

NAPLES
ROUTES 11\302

CROSS SECTIONS

SHEET NUMBER

39

OF 160

Sta. 18+00.00

Filename: ...\039_XSECT_18+00 LT_016.dgn Division: HIGHWAY Username: mark.poulin Date:7/22/2010

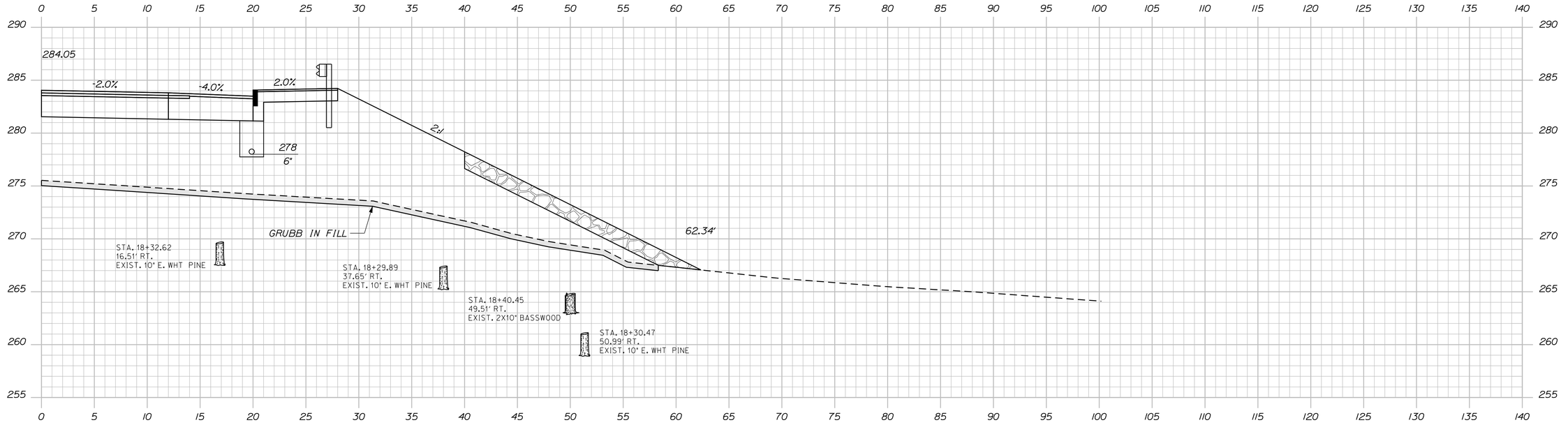

18+50.00 RT.

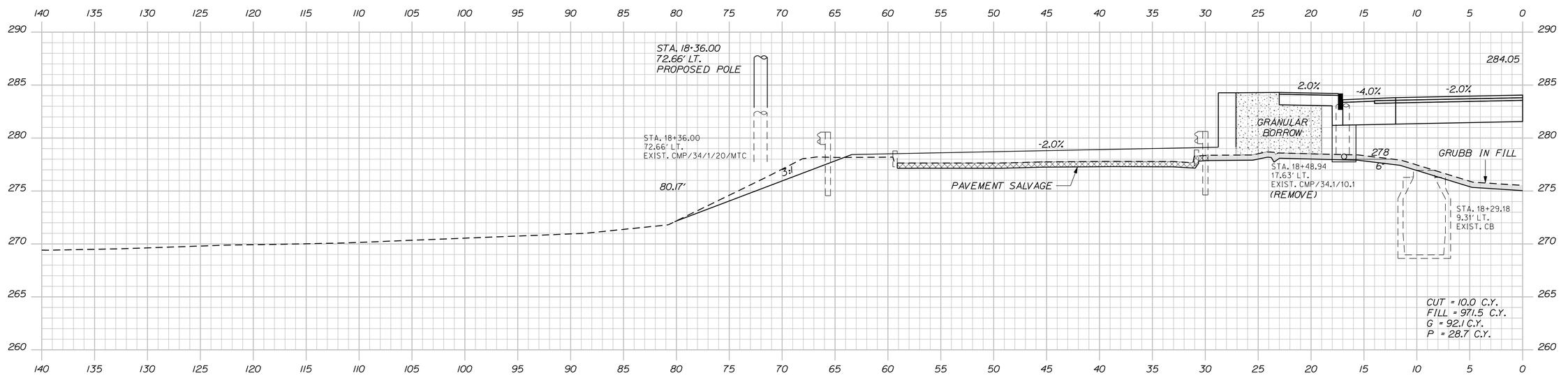

18+50.00 LT.

STATE OF MAINE
DEPARTMENT OF TRANSPORTATION

BH-A106(000)

PIN
11060.00

HIGHWAY PLANS

PROJ. MANAGER	J. Wentworth	BY	DATE
DESIGNDETAILED	A. Mousseau	bl-tron	July 2010
CHECKEDREVIEWED	-----	-----	-----
DESIGN2DETAILED2	-----	--	-----
DESIGN3DETAILED3	-----	-----	-----
REVISIONS 1	-----	-----	-----
REVISIONS 2	-----	-----	-----
REVISIONS 3	-----	-----	-----
REVISIONS 4	-----	-----	-----
FIELD CHANGES	-----	-----	-----

SIGNATURE

P.E. NUMBER

DATE

NAPLES
ROUTES 11\302

CROSS SECTIONS

SHEET NUMBER

40

OF 160

Sta. 18+50.00

Filename: ...\040_XSECT_18+50 LT_017.dgn Division: HIGHWAY Username: mark.poulin Date:7/22/2010

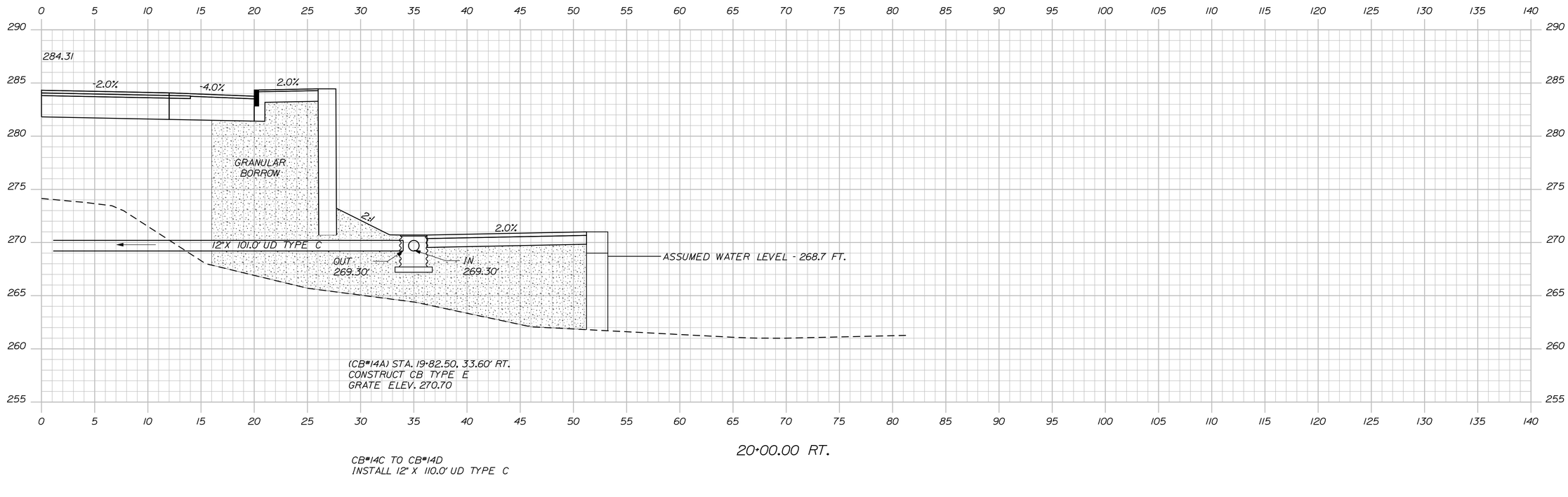

STATE OF MAINE
DEPARTMENT OF TRANSPORTATION

BH-A106(000)

PIN 11060.00

HIGHWAY PLANS

PROJ. MANAGER	J. Wentworth		
DESIGNDETAILED	A. Mousseau	BY	DATE
CHECKEDREVIEWED	-----	-----	-----
DESIGN2DETAILED2	-----	-----	-----
DESIGN3DETAILED3	-----	-----	-----
REVISIONS 1	-----	-----	-----
REVISIONS 2	-----	-----	-----
REVISIONS 3	-----	-----	-----
REVISIONS 4	-----	-----	-----
FIELD CHANGES	-----	-----	-----

SIGNATURE

P.E. NUMBER

DATE

NAPLES
ROUTES 11\302

CROSS SECTIONS

SHEET NUMBER

41

OF 160

Sta. 20+00.00

Username: mark.poulin Date:7/22/2010 Division: HIGHWAY Filename: ...\041_XSECT_20+00 LT_018.dgn

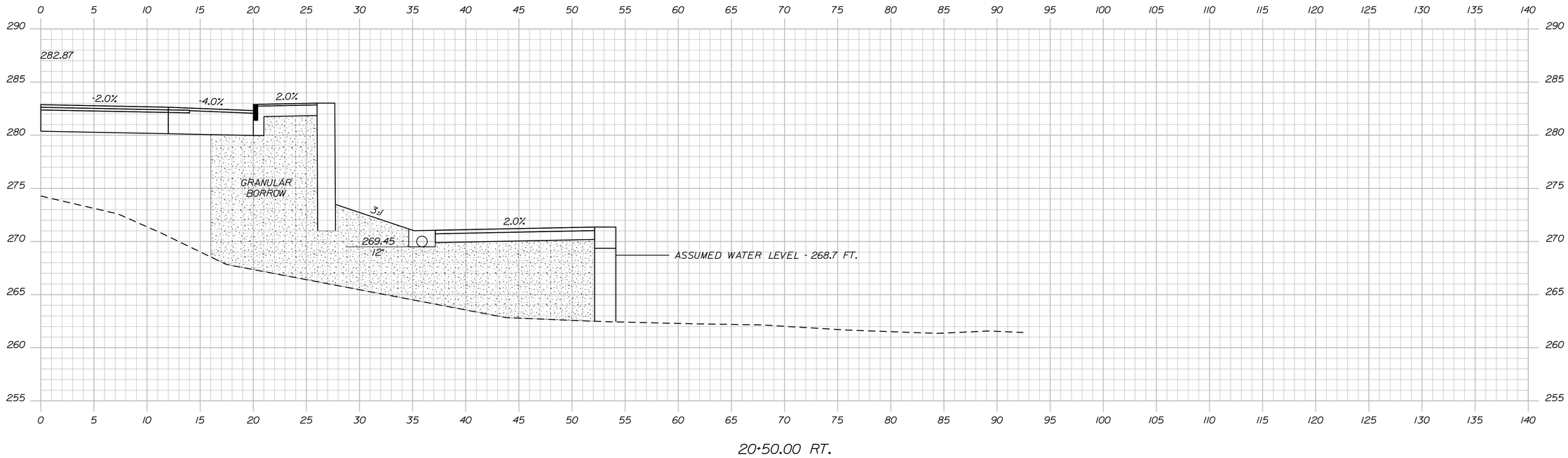

20+50.00 RT.

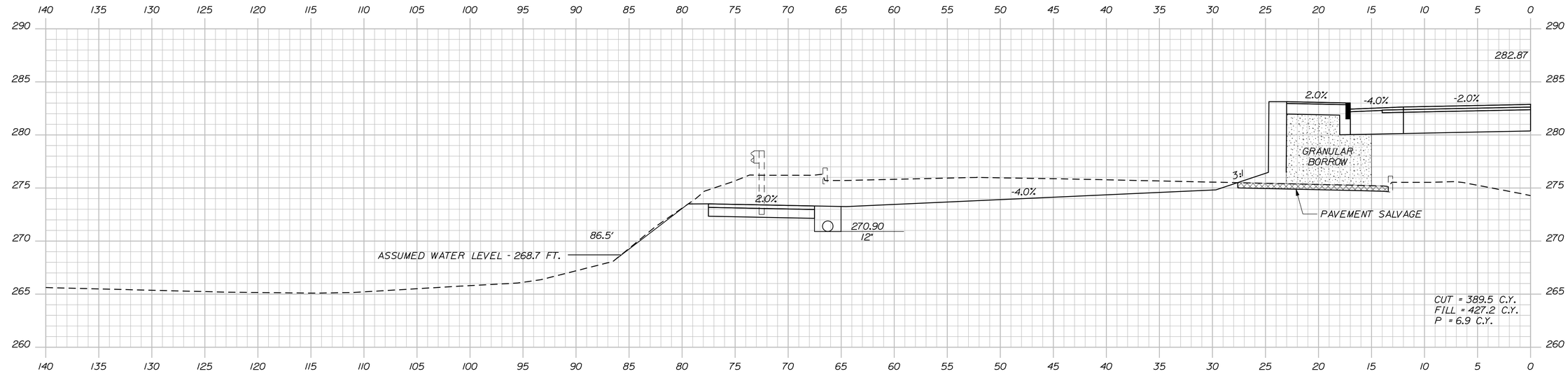

20+50.00 LT.

STATE OF MAINE
DEPARTMENT OF TRANSPORTATION

BH-A106(000)

PIN
11060.00

HIGHWAY PLANS

PROJ. MANAGER	J. Wentworth	BY	DATE
DESIGNDETAILED	A. Mousseau	bt-tron	July 2010
CHECKEDREVIEWED	-----	-----	-----
DESIGN2DETAILED2	-----	--	-----
DESIGN3DETAILED3	-----	----------	-----
REVISIONS 1	-----	-----	-----
REVISIONS 2	-----	-----	-----
REVISIONS 3	-----	-----	-----
REVISIONS 4	-----	-----	-----
FIELD CHANGES	-----	-----	-----

SIGNATURE

P.E. NUMBER

DATE

NAPLES
ROUTES 11\302

CROSS SECTIONS

SHEET NUMBER

42

OF 160

Sta. 20+50.00

Username: mark.poulin Date:7/22/2010 Division: HIGHWAY Filename: ...\042_XSECT_20+50 LT_019.dgn

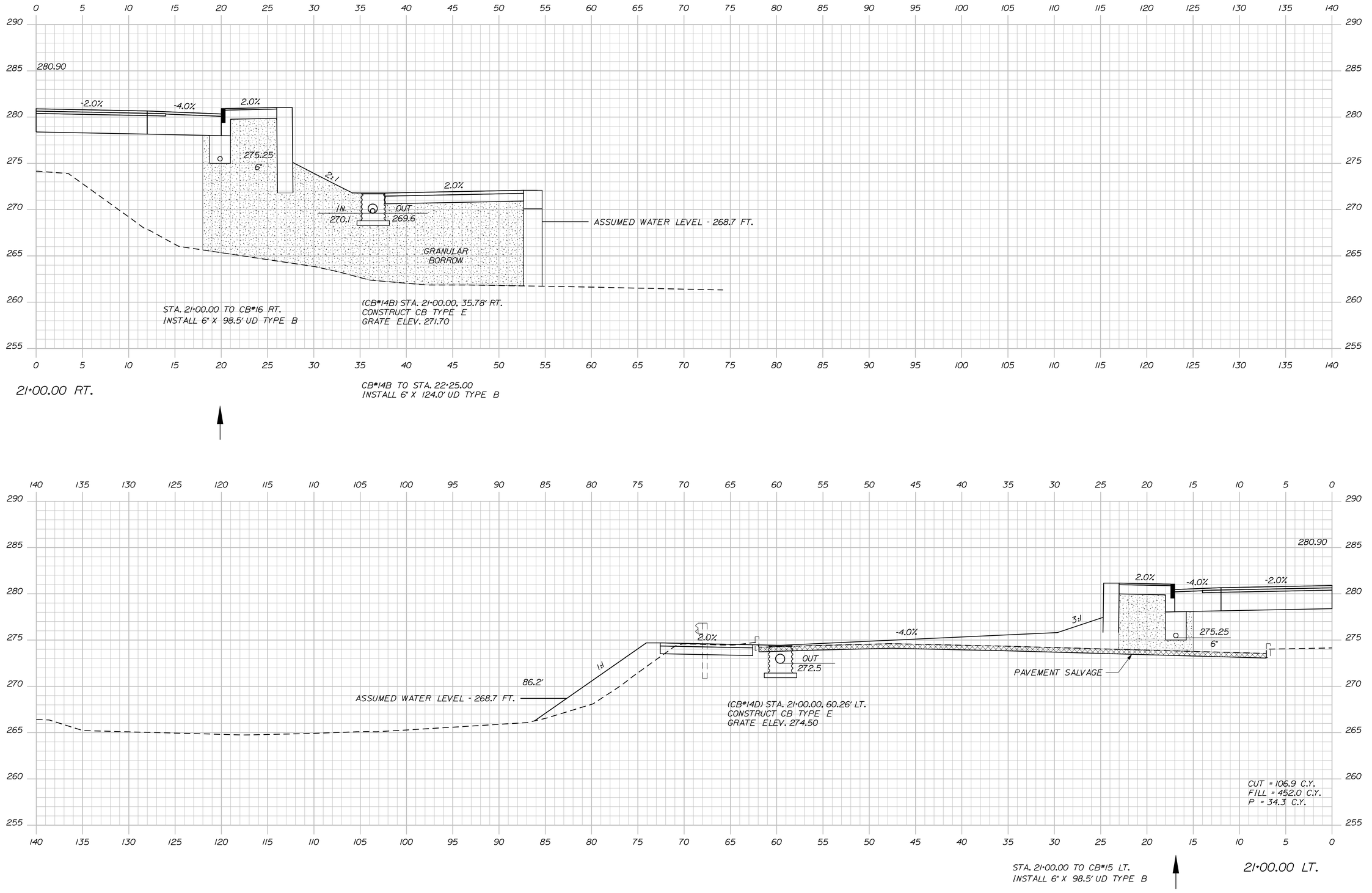

STATE OF MAINE
DEPARTMENT OF TRANSPORTATION

BH-A106(000)

PIN 11060.00

HIGHWAY PLANS

PROJ. MANAGER	J. Wentworth	BY	DATE
DESIGNDETAILED	A. Moussaou	bt-tron	July 2010
CHECKEDREVIEWED	-----	-----	-----
DESIGN2DETAILED2	-----	--	-----
DESIGN3DETAILED3	-----	-----	-----
REVISIONS 1	-----	-----	-----
REVISIONS 2	-----	-----	-----
REVISIONS 3	-----	-----	-----
REVISIONS 4	-----	-----	-----
FIELD CHANGES	-----	-----	-----

SIGNATURE

P.E. NUMBER

DATE

NAPLES
ROUTES 11\302

CROSS SECTIONS

SHEET NUMBER

43

OF 160

Sta. 21+00.00

Filename: ...\043_XSECT_21+00 LT_020.dgn Division: HIGHWAY Username: mark.poulin Date:7/22/2010

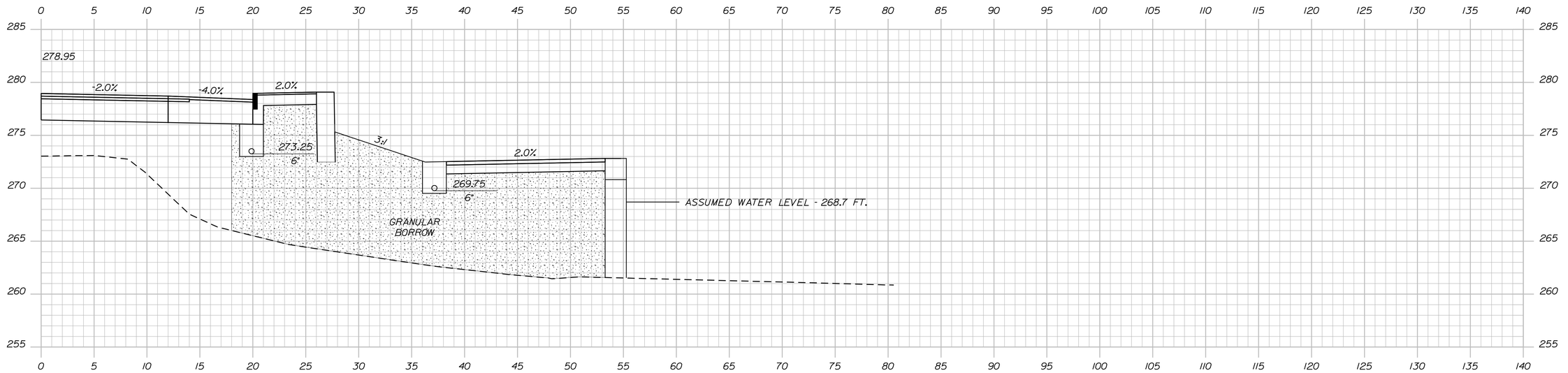

21+50.00 RT.

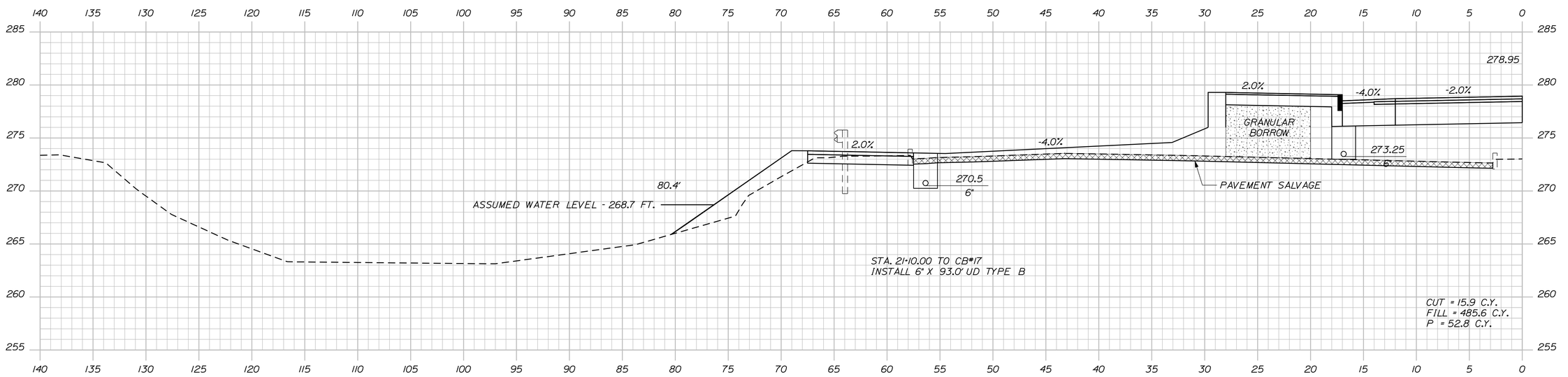

21+50.00 LT.

STATE OF MAINE
DEPARTMENT OF TRANSPORTATION

BH-A106(000)

PIN 11060.00

HIGHWAY PLANS

	BY	DATE
PROJ. MANAGER	J. Wentworth	
DESIGNDETAILED	A. Mousseau	July 2010
CHECKEDREVIEWED	bt-tron	------
DESIGN2DETAILED02	-----	--
DESIGN3DETAILED03	-----	------
REVISIONS 1	------	------
REVISIONS 2	------	------
REVISIONS 3	------	------
REVISIONS 4	------	------
FIELD CHANGES	------	------

SIGNATURE

P.E. NUMBER

DATE

NAPLES
ROUTES 11\302

CROSS SECTIONS

SHEET NUMBER

44

OF 160

Sta. 21+50.00

Filename: ...\044_XSECT_21+50 LT_021.dgn Division: HIGHWAY Username: mark.poulin Date:7/22/2010

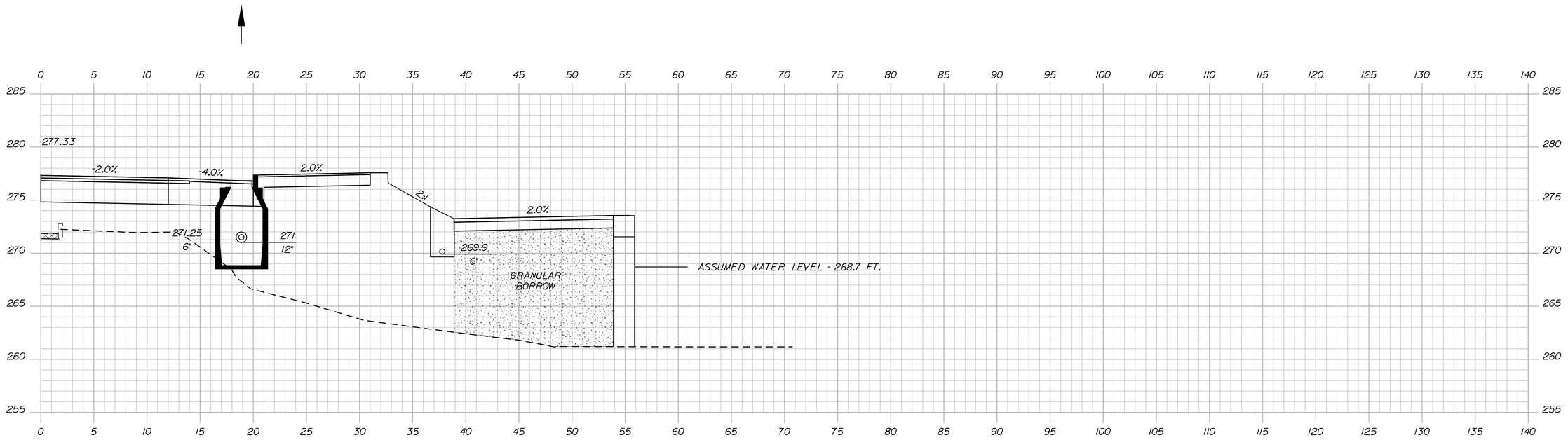

22+00.00 RT.

(CB#16) STA. 22+00.00, 18.88' RT.
CONSTRUCT CB TYPE AI-C
GRATE ELV. = 276.72

CB#16 TO CB#22 RT.
INSTALL 12" X 247' UD TYPE C

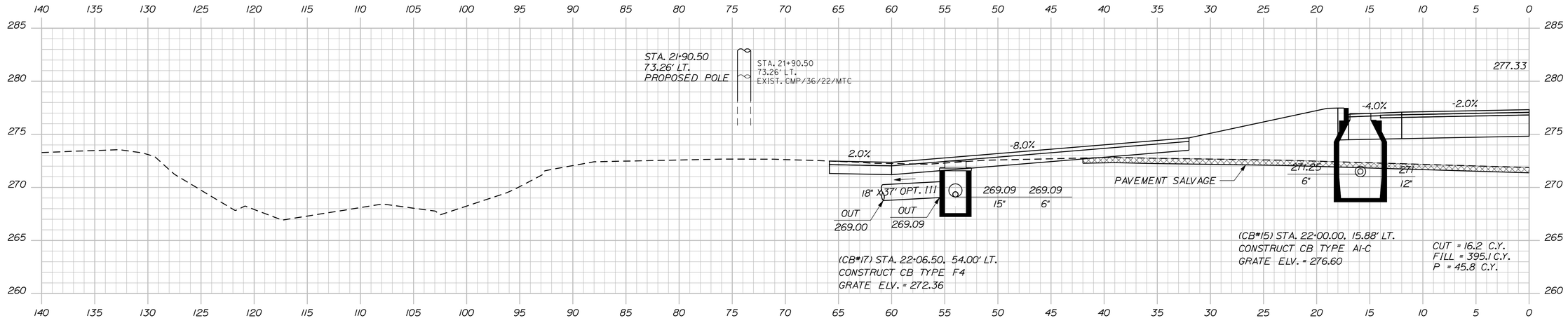

(CB#17) STA. 22+06.50, 54.00' LT.
CONSTRUCT CB TYPE F4
GRATE ELV. = 272.36

(CB#15) STA. 22+00.00, 15.88' LT.
CONSTRUCT CB TYPE AI-C
GRATE ELV. = 276.60

CUT = 16.2 C.Y.
FILL = 395.1 C.Y.
P = 45.8 C.Y.

STA. 21+73.70, 72.5' LT. TO CB#17 LT.
INSTALL 18" X 37' CULV. PIPE OPT. III

CB#17 TO CB#19 LT.
INSTALL 15" X 175.0' UD TYPE C

CB#15 TO CB#20 LT.
INSTALL 12" X 247' UD TYPE C

22+00.00 LT.

STATE OF MAINE
DEPARTMENT OF TRANSPORTATION

BH-A106(000)

PIN
11060.00

HIGHWAY PLANS

	BY	DATE
PROJ. MANAGER	J. Wentworth	
DESIGNDETAILED	A. Mousseau	July 2010
CHECKEDREVIEWED	bt-tron	------
DESIGN2DETAILED02	-----	------
DESIGN3DETAILED3	-----	------
REVISIONS 1	-----	------
REVISIONS 2	-----	------
REVISIONS 3	-----	------
REVISIONS 4	-----	------
FIELD CHANGES	-----	------

SIGNATURE

P.E. NUMBER

DATE

NAPLES
ROUTES 11\302

CROSS SECTIONS

SHEET NUMBER

45

OF 160

Sta. 22+00.00

Filename: ...\045_XSECT_22+00 LT_022.dgn Division: HIGHWAY Username: mark.poulin Date:7/22/2010

Username: mark.poulin Date:7/22/2010
Division: HIGHWAY
Filename: ...\msto\046_XSECT_22+50_023.dgn

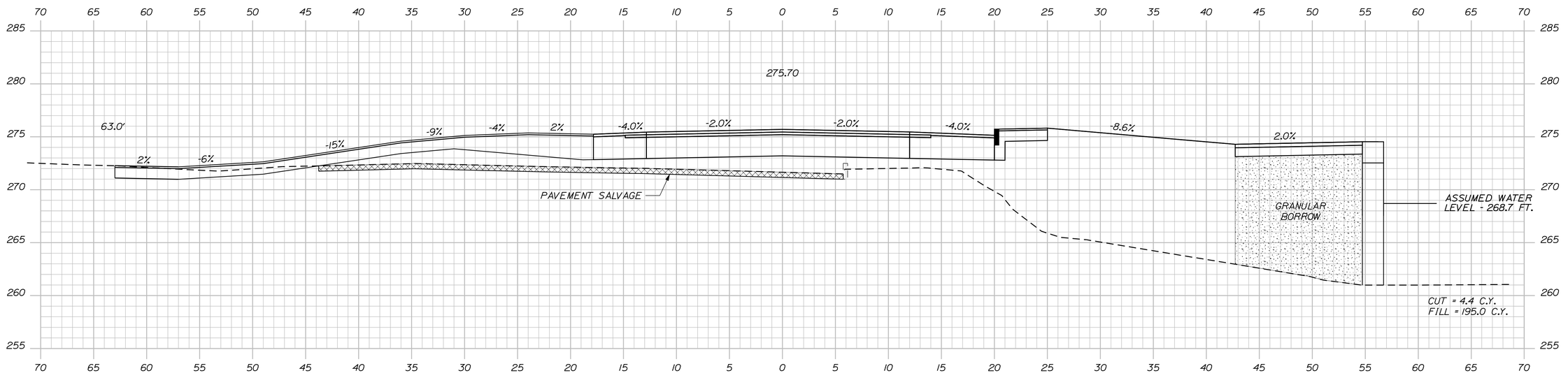

STA. 22+69.00 LT.
CONSTRUCT PAVED DR.
26' CURB OPENING

22+69.00

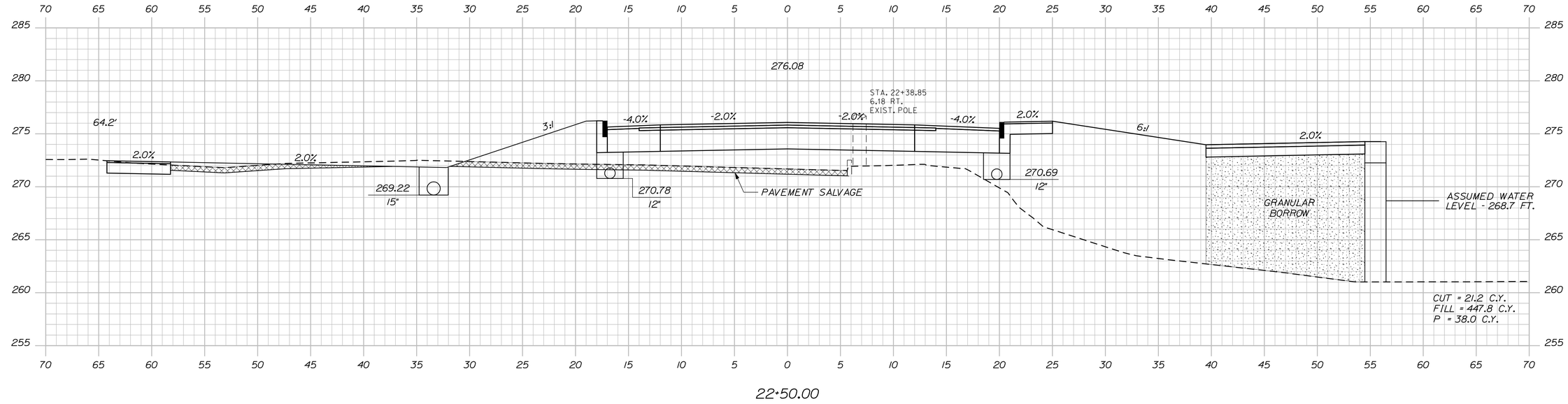

22+50.00

STATE OF MAINE
DEPARTMENT OF TRANSPORTATION

BH-A106(000)

PIN
11060.00

HIGHWAY PLANS

PROJ. MANAGER	J. Wentworth	BY	DATE
DESIGNDETAILED	A. Mousseau	bt-tron	July 2010
CHECKEDREVIEWED	-----	-----	-----
DESIGN2DETAILED2	-----	--	-----
DESIGN3DETAILED3	-----	-----	-----
REVISIONS 1	-----	-----	-----
REVISIONS 2	-----	-----	-----
REVISIONS 3	-----	-----	-----
REVISIONS 4	-----	-----	-----
FIELD CHANGES	-----	-----	-----

SIGNATURE

P.E. NUMBER

DATE

NAPLES
ROUTES 11\302

CROSS SECTIONS

SHEET NUMBER

46

OF 160

Sta. 22+00.00 to Sta. 22+50.00

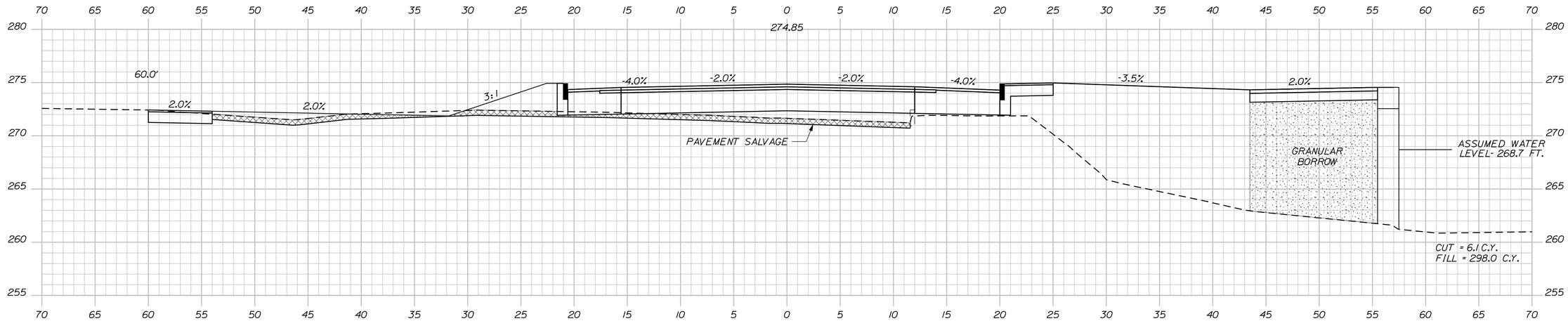

STATE OF MAINE
DEPARTMENT OF TRANSPORTATION

BH-A106(000)

PIN 11060.00

HIGHWAY PLANS

	BY	DATE
PROJ. MANAGER	J. Wentworth	
DESIGNDETAILED	A Mousseau	bt-tran	July 2010
CHECKEDREVIEWED		
DESIGN2DETAILED2		
DESIGN3DETAILED3		
REVISIONS 1		
REVISIONS 2		
REVISIONS 3		
REVISIONS 4		
FIELD CHANGES		

SIGNATURE

P.E. NUMBER

DATE

NAPLES
ROUTES 11\302

CROSS SECTIONS

SHEET NUMBER

47

OF 160

Sta. 22+69.00 to Sta. 23+00.00

Filename: ...\msta\047_XSECT_23+00_024.dgn Division: HIGHWAY Username: mark.poulin Date:7/22/2010

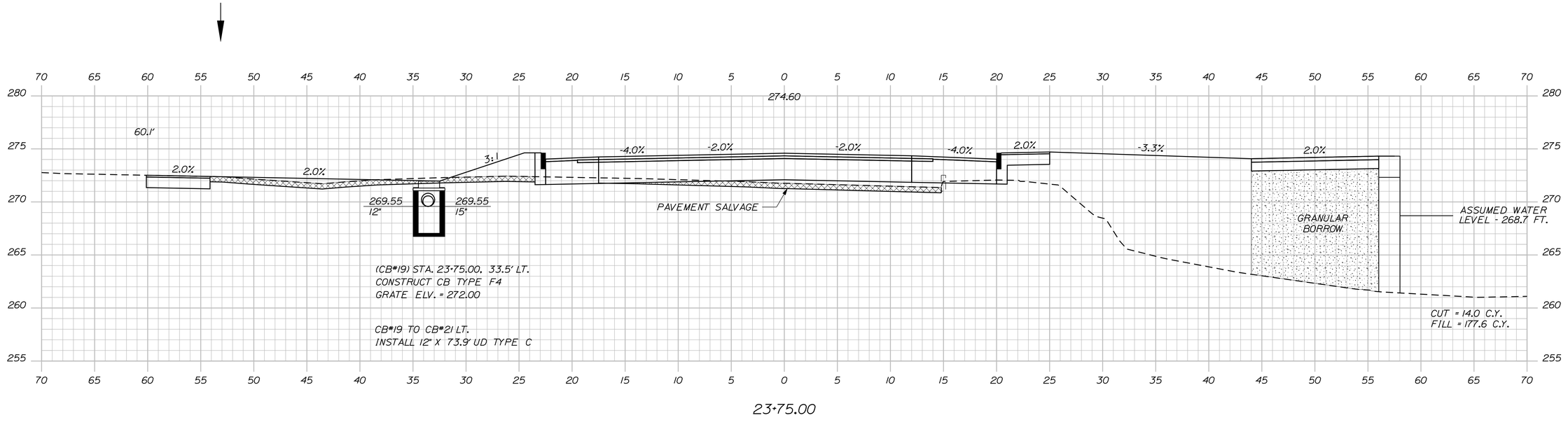

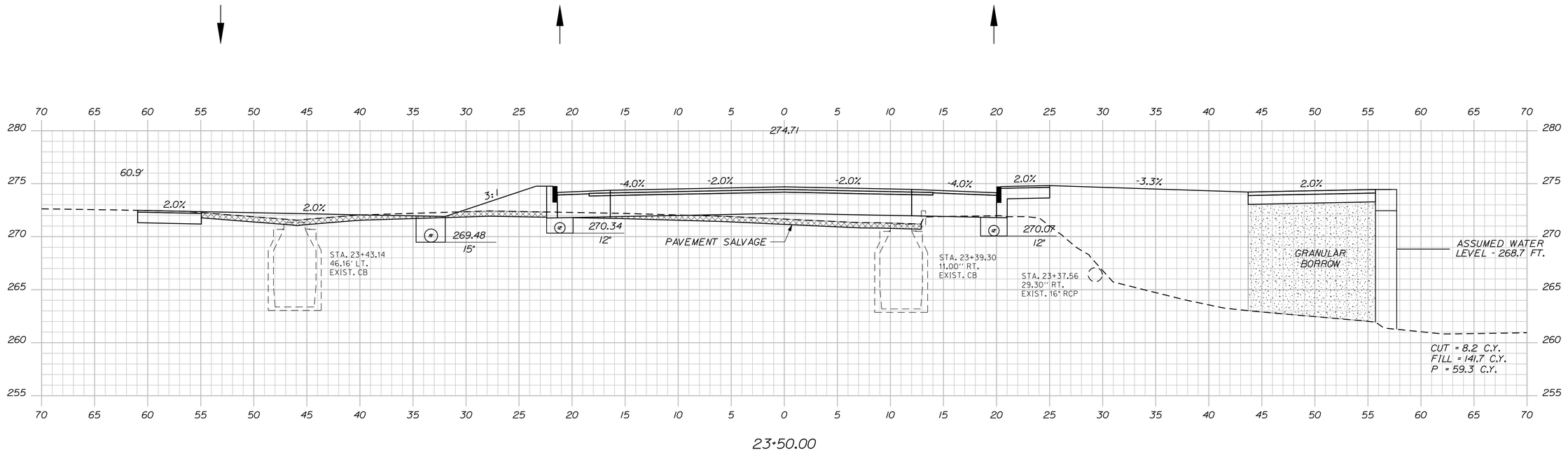

Sta. 23+31.50 to Sta. 23+75.00

STATE OF MAINE
DEPARTMENT OF TRANSPORTATION

BH-A106(000)

PIN
11060.00

HIGHWAY PLANS

PROJ. MANAGER	J. Wentworth	BY	DATE
DESIGNDETAILED	A. Mousseau	bt-tron	July 2010
CHECKEDREVIEWED	-----	-----	-----
DESIGN2DETAILED2	-----	--	-----
DESIGN3DETAILED3	-----	-----	-----
REVISIONS 1	-----	-----	-----
REVISIONS 2	-----	-----	-----
REVISIONS 3	-----	-----	-----
REVISIONS 4	-----	-----	-----
FIELD CHANGES	-----	-----	-----

SIGNATURE

P.E. NUMBER

DATE

NAPLES
ROUTES 11\302

CROSS SECTIONS

SHEET NUMBER

48

OF 160

Username: mark.poulin Date:7/22/2010

Division: HIGHWAY

Filename: ...\msto\048_XSECT_23+50_025.dgn

Filename: ...\msto\049_XSECT_24+00_026.dgn Division: HIGHWAY Username: mark.poulin Date:7/22/2010

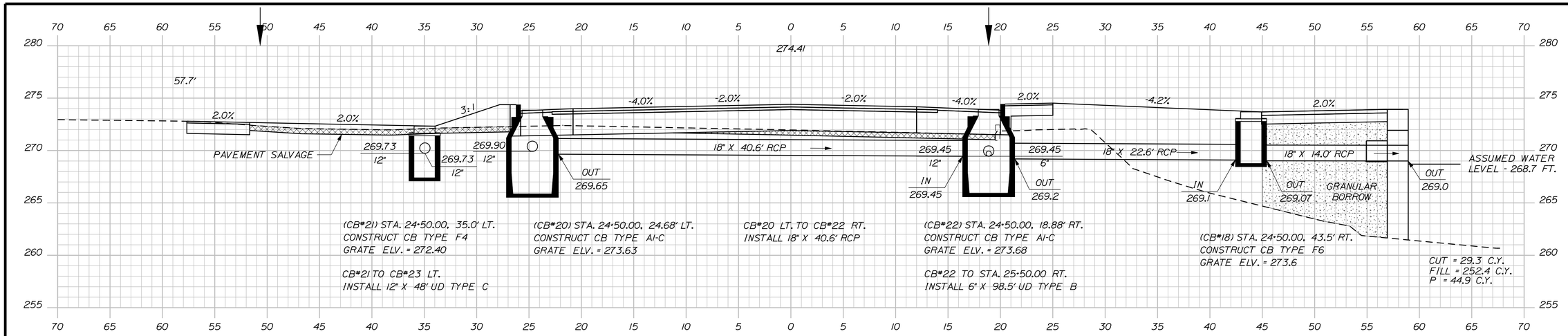

STATE OF MAINE
DEPARTMENT OF TRANSPORTATION

BH-A106(000)

PIN
11060.00

HIGHWAY PLANS

	BY	DATE
PROJ. MANAGER	J. Wentworth	
DESIGNDETAILED	A. Mousseau	July 2010
CHECKEDREVIEWED	bt-tron	-----
DESIGNDETAILED2	-----	-----
DESIGNDETAILED3	-----	-----
REVISIONS 1	-----	-----
REVISIONS 2	-----	-----
REVISIONS 3	-----	-----
REVISIONS 4	-----	-----
FIELD CHANGES	-----	-----

SIGNATURE

P.E. NUMBER

DATE

NAPLES
ROUTES 11\302

CROSS SECTIONS

SHEET NUMBER

49

OF 160

Sta. 24+00.00 to Sta. 24+50.00

Filename: ...\mslo\050_XSECT_24+72_027.dgn Division: HIGHWAY Username: mark.poulin Date:7/22/2010

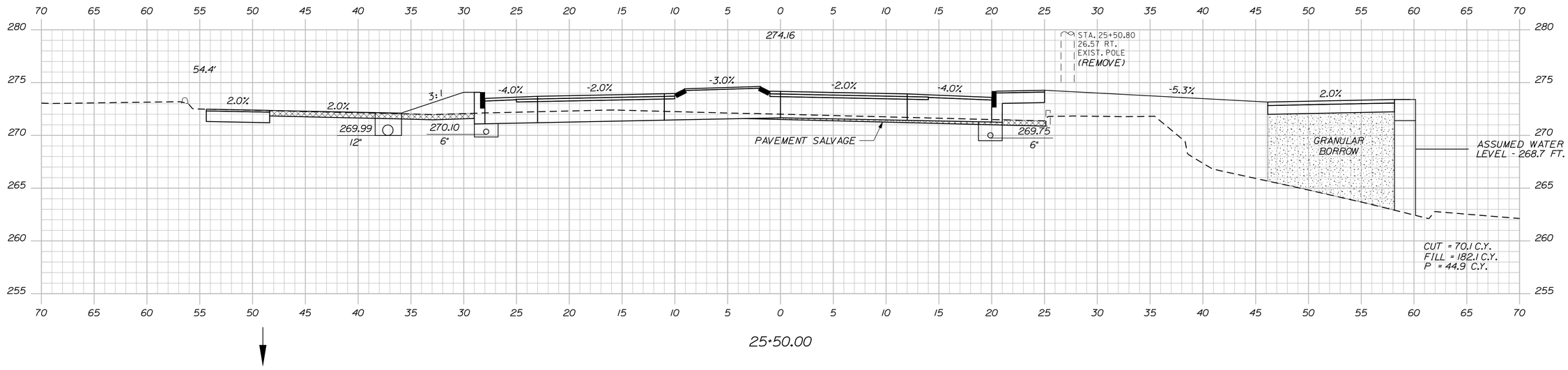

STATE OF MAINE
DEPARTMENT OF TRANSPORTATION

BH-A106(000)

PIN 11060.00

HIGHWAY PLANS

	BY	DATE
PROJ. MANAGER	J. Wentworth	
DESIGNDETAILED	A. Mousseau	July 2010
CHECKEDREVIEWED	bt-tron	
DESIGN2DETAILED02		
DESIGN3DETAILED03		
REVISIONS 1		
REVISIONS 2		
REVISIONS 3		
REVISIONS 4		
FIELD CHANGES		

SIGNATURE

P.E. NUMBER

DATE

NAPLES
ROUTES 11\302

CROSS SECTIONS

SHEET NUMBER

50

OF 160

Sta. 24+72.00 to Sta. 25+50.00

Username: mark.poulin Date:7/22/2010
Division: HIGHWAY
Filename: ...\msto\051_XSECT_25+75_028.dgn

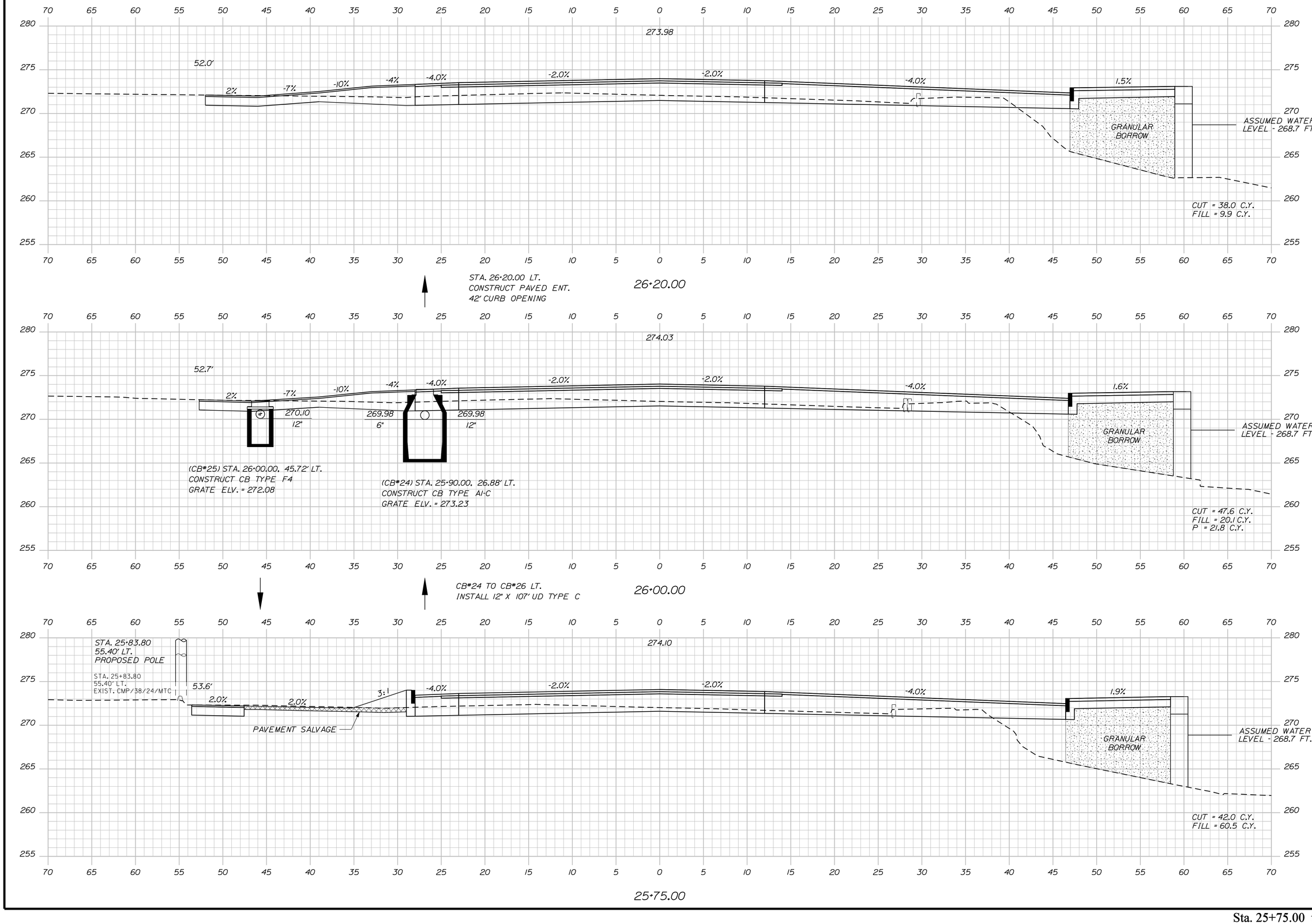

STATE OF MAINE
DEPARTMENT OF TRANSPORTATION

BH-A106(000)

PIN 11060.00

HIGHWAY PLANS

		SIGNATURE	P.E. NUMBER	DATE
PROJ. MANAGER	J. Wentworth			
DESIGNDETAILED	A. Mousseau	bt-tron		July 2010
CHECKEDREVIEWED				
DESIGNDETAILED2				
DESIGNDETAILED3				
REVISIONS 1				
REVISIONS 2				
REVISIONS 3				
REVISIONS 4				
FIELD CHANGES				

NAPLES
ROUTES 11\302

CROSS SECTIONS

SHEET NUMBER

51

OF 160

Sta. 25+75.00 to Sta. 26+20.00

Filename: ...\msta\052_XSECT_26+50_029.dgn Username: mark.poulin Division: HIGHWAY Date:7/22/2010

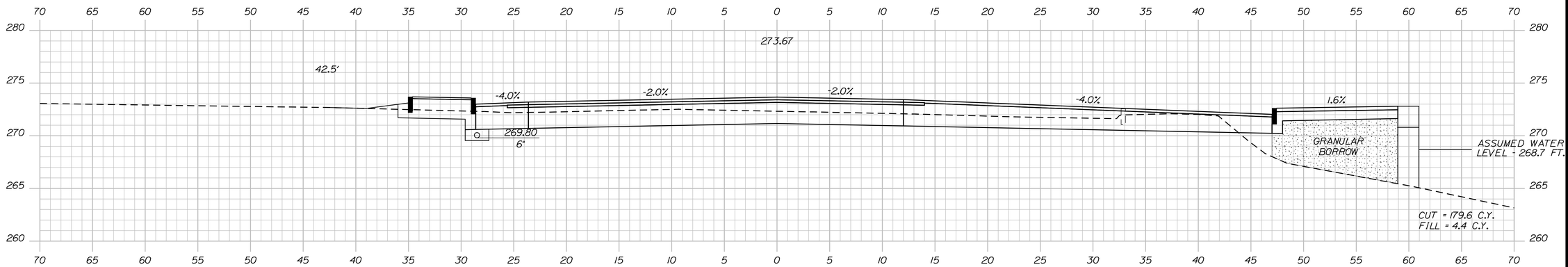

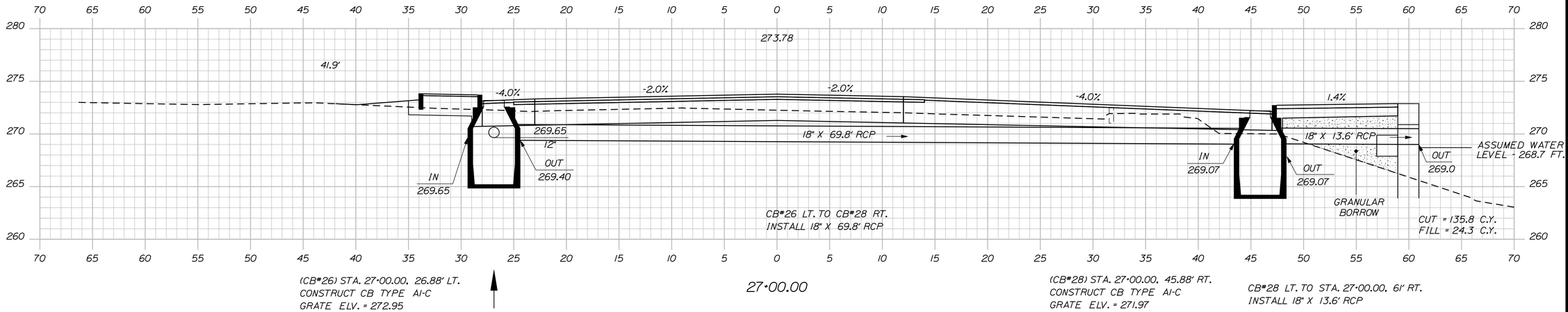

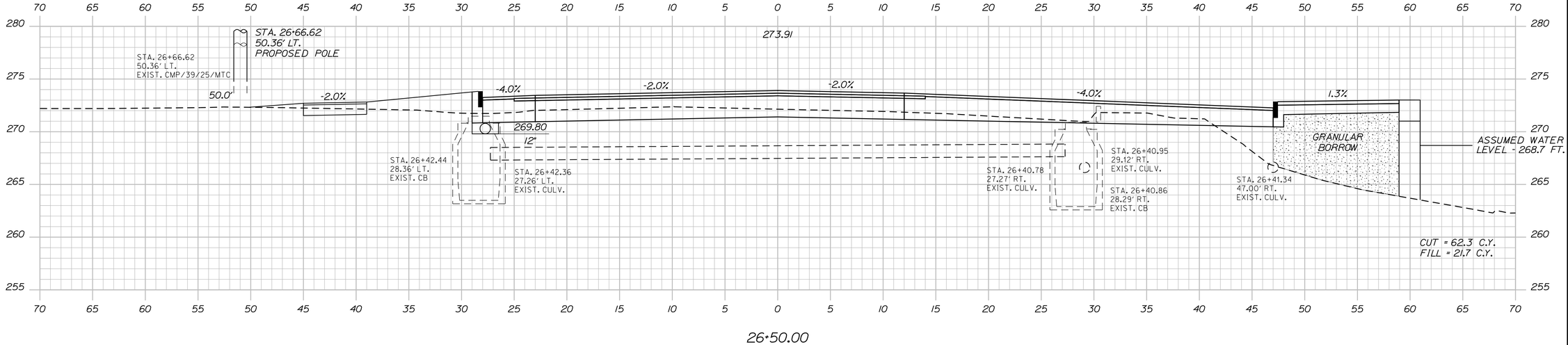

STATE OF MAINE
DEPARTMENT OF TRANSPORTATION

BH-A106(000)

PIN 11060.00

HIGHWAY PLANS

	BY	DATE
PROJ. MANAGER	J. Wentworth	
DESIGNDETAILED	A Mousseau	July 2010
CHECKEDREVIEWED	bt-tron	-----
DESIGN2DETAILED2	-----	-----
DESIGN3DETAILED3	-----	-----
REVISIONS 1	-----	-----
REVISIONS 2	-----	-----
REVISIONS 3	-----	-----
REVISIONS 4	-----	-----
FIELD CHANGES	-----	-----

SIGNATURE

P.E. NUMBER

DATE

NAPLES
ROUTES 11\302

CROSS SECTIONS

SHEET NUMBER

52

OF 160

Sta. 26+50.00 to Sta. 27+50.00

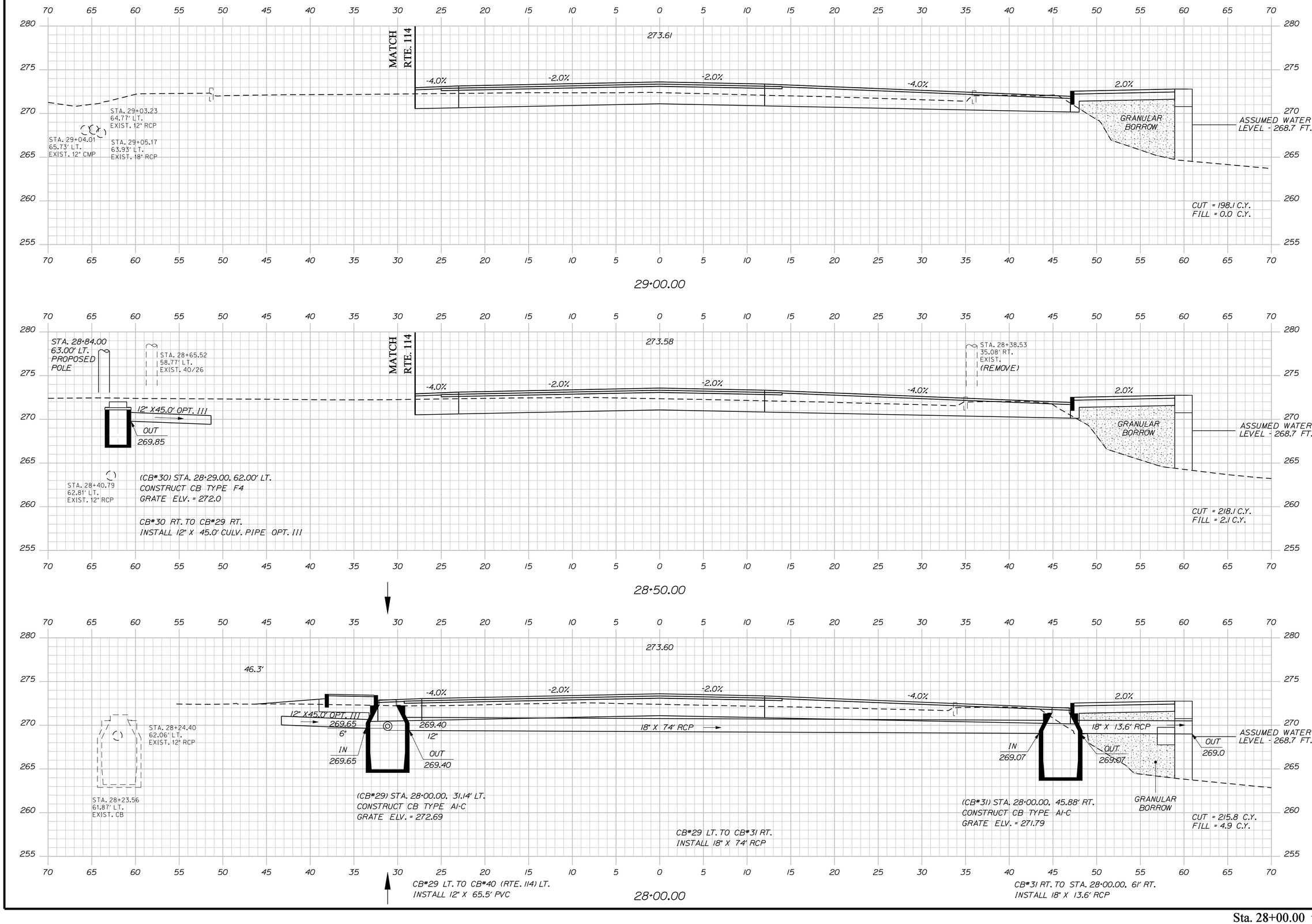

STATE OF MAINE
DEPARTMENT OF TRANSPORTATION

BH-A106(000)

PIN 11060.00

HIGHWAY PLANS

		BY	DATE
PROJ. MANAGER	J. Wentworth		
DESIGNDETAILED	A. Mousseau	bt-tron	July 2010
CHECKEDREVIEWED	-----	-----	-----
DESIGN2DETAILED2	-----	--	-----
DESIGN3DETAILED3	-----	-----	-----
REVISIONS 1	-----	-----	-----
REVISIONS 2	-----	-----	-----
REVISIONS 3	-----	-----	-----
REVISIONS 4	-----	-----	-----
FIELD CHANGES	-----	-----	-----

SIGNATURE

P.E. NUMBER

DATE

NAPLES
ROUTES 11\302

CROSS SECTIONS

SHEET NUMBER

53

OF 160

Sta. 28+00.00 to Sta. 29+00.00

Filename: ...\mst0\053_XSECT_28+00_030.dgn Division: HIGHWAY Username: mark.poulin Date:7/22/2010

Filename: ...\mstoV054_XSECT_29+50_031.dgn Division: HIGHWAY Username: mark.poulin Date:7/22/2010

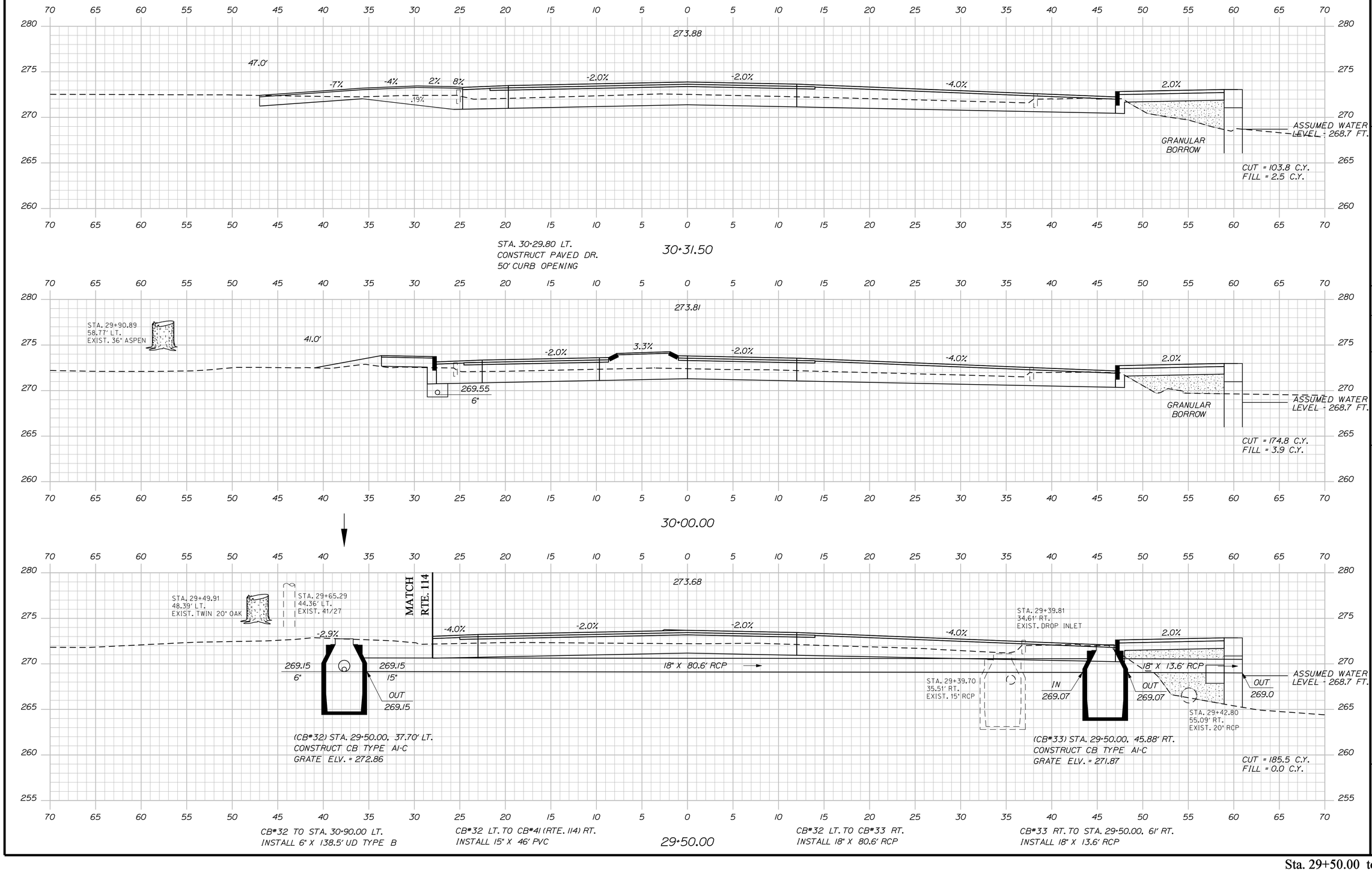

STATE OF MAINE
DEPARTMENT OF TRANSPORTATION

BH-A106(000)

PIN 11060.00

HIGHWAY PLANS

	BY	DATE
PROJ. MANAGER	J. Wentworth	July 2010
DESIGNDETAILED	A. Mousseau	bt-tron
CHECKEDREVIEWED	-----	-----
DESIGN2DETAILED2	-----	-----
DESIGN3DETAILED3	-----	-----
REVISIONS 1	-----	-----
REVISIONS 2	-----	-----
REVISIONS 3	-----	-----
REVISIONS 4	-----	-----
FIELD CHANGES	-----	-----

SIGNATURE

P.E. NUMBER

DATE

NAPLES
ROUTES 11\302

CROSS SECTIONS

SHEET NUMBER

54

OF 160

Sta. 29+50.00 to Sta. 30+31.50

Filename: ...\mslo\055_XSECT_30+50_032.dgn Division: HIGHWAY Username: mark.poulin Date:7/22/2010

STATE OF MAINE
DEPARTMENT OF TRANSPORTATION

BH-A106(000)

PIN 11060.00

HIGHWAY PLANS

PROJ. MANAGER	J. Wentworth		
DESIGNDETAILED	A. Mousseau	bt-tron	July 2010
CHECKEDREVIEWED	-----	-----	-----
DESIGN2DETAILED2	-----	-----	-----
DESIGN3DETAILED3	-----	-----	-----
REVISIONS 1	-----	-----	-----
REVISIONS 2	-----	-----	-----
REVISIONS 3	-----	-----	-----
REVISIONS 4	-----	-----	-----
FIELD CHANGES	-----	-----	-----

SIGNATURE

P.E. NUMBER

DATE

NAPLES
ROUTES 11\302

CROSS SECTIONS

SHEET NUMBER

55

OF 160

Sta. 30+50.00 to Sta. 31+00.00

Filename: ...\mslo\056_XSECT_31+11_033.dgn Username: mark.poulin Division: HIGHWAY Date:7/22/2010

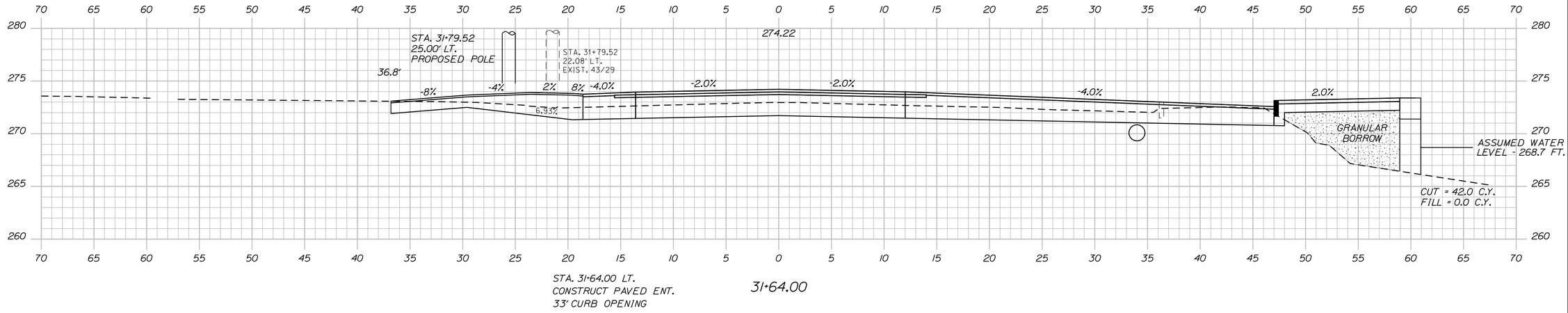

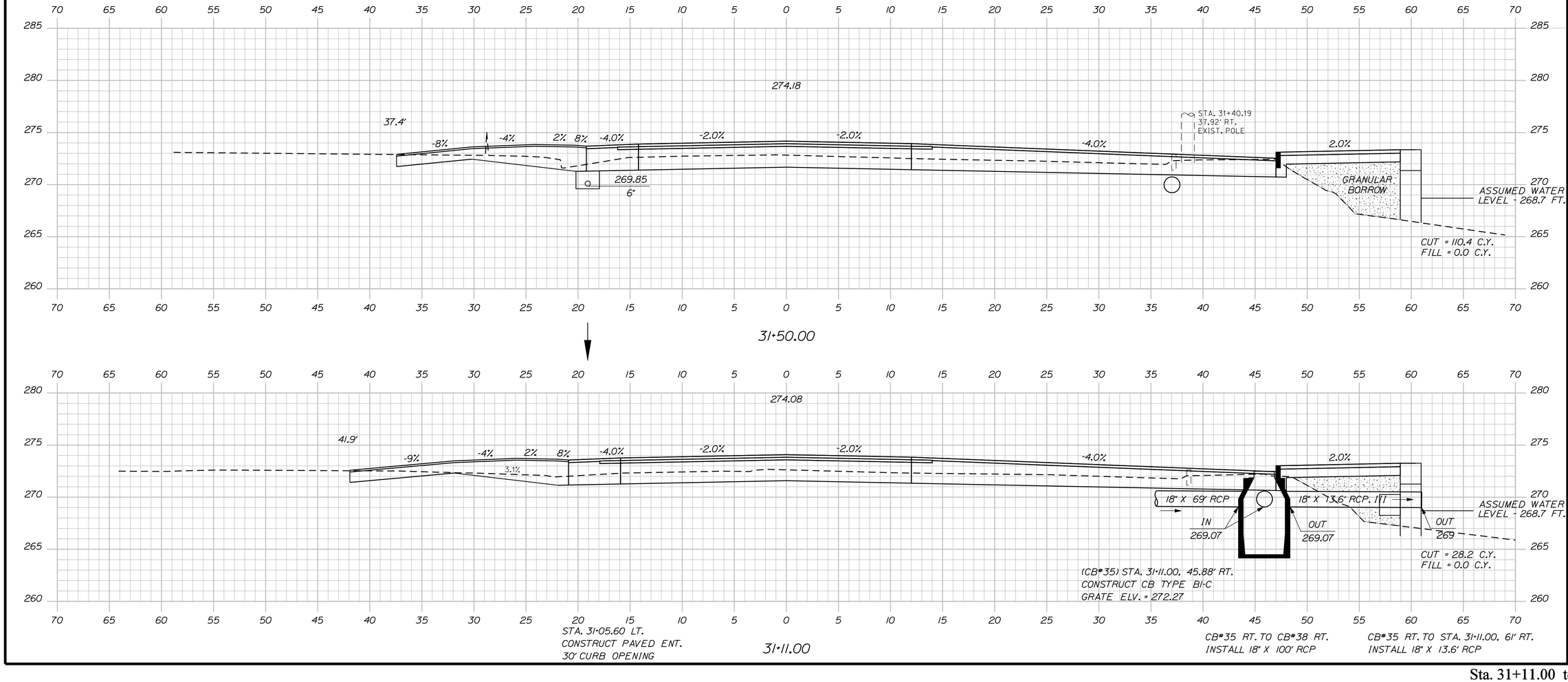

STATE OF MAINE
DEPARTMENT OF TRANSPORTATION

BH-A106(000)

PIN 11060.00

HIGHWAY PLANS

	BY	DATE
PROJ. MANAGER	J. Wentworth	
DESIGNDETAILED	A. Mousseau	July 2010
CHECKEDREVIEWED	bt-tron	-----
DESIGN2DETAILED2	-----	-----
DESIGN3DETAILED3	-----	-----
REVISIONS 1	-----	-----
REVISIONS 2	-----	-----
REVISIONS 3	-----	-----
REVISIONS 4	-----	-----
FIELD CHANGES	-----	-----

SIGNATURE

P.E. NUMBER

DATE

NAPLES
ROUTES 11\302

CROSS SECTIONS

SHEET NUMBER

56

OF 160

Sta. 31+11.00 to Sta. 31+64.00

Username: allee.mousseau Date:7/27/2010
Division: HIGHWAY
Filename: ...\MSTA\057_XSECT_32+00_034.dgn

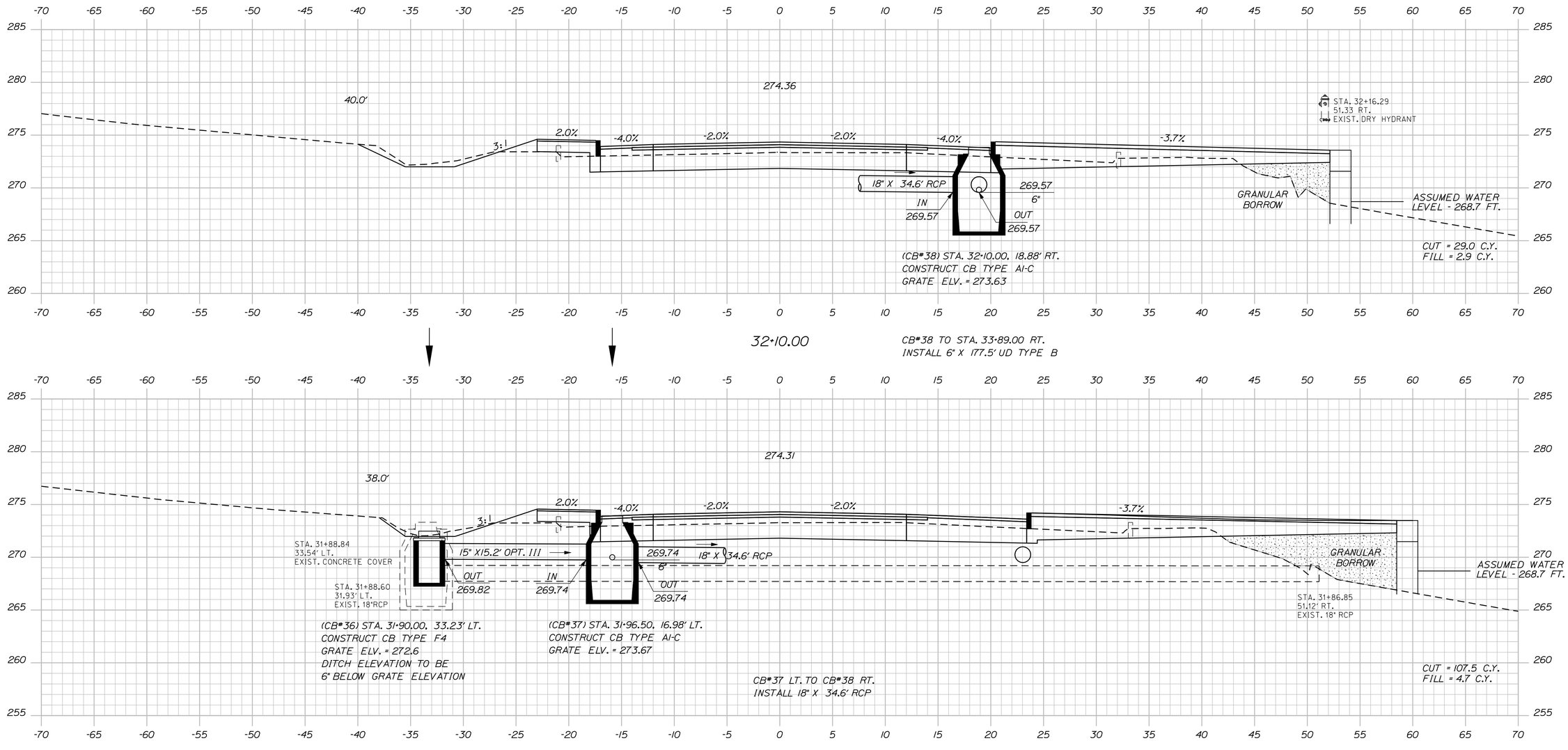

STATE OF MAINE
DEPARTMENT OF TRANSPORTATION

BH-A106(000)

PIN 11060.00

HIGHWAY PLANS

PROJ. MANAGER	J. Wentworth	BY	
DESIGN-DETAILED	J. Folsom	D. Domren	JUN. 2010
CHECKED-REVIEWED	J. Folsom	--	-----
DESIGN2-DETAILED2	-----	-----	-----
DESIGN3-DETAILED3	-----	-----	-----
REVISIONS 1	-----	-----	-----
REVISIONS 2	-----	-----	-----
REVISIONS 3	-----	-----	-----
REVISIONS 4	-----	-----	-----
FIELD CHANGES	-----	-----	-----

SIGNATURE

P.E. NUMBER

DATE

NAPLES
ROUTES 11\302

CROSS SECTIONS

SHEET NUMBER

57

OF 160

Sta. 32+00.00 to Sta. 32+10.00

Filename: ...\mslo\058_XSECT_32+50_035.dgn Division: HIGHWAY Username: mark.poulin Date:7/22/2010

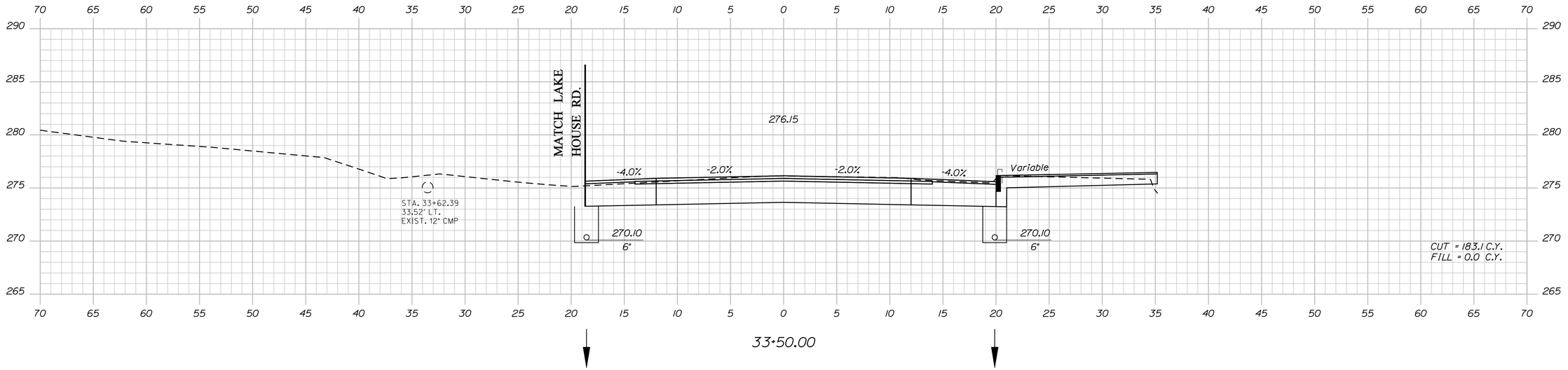

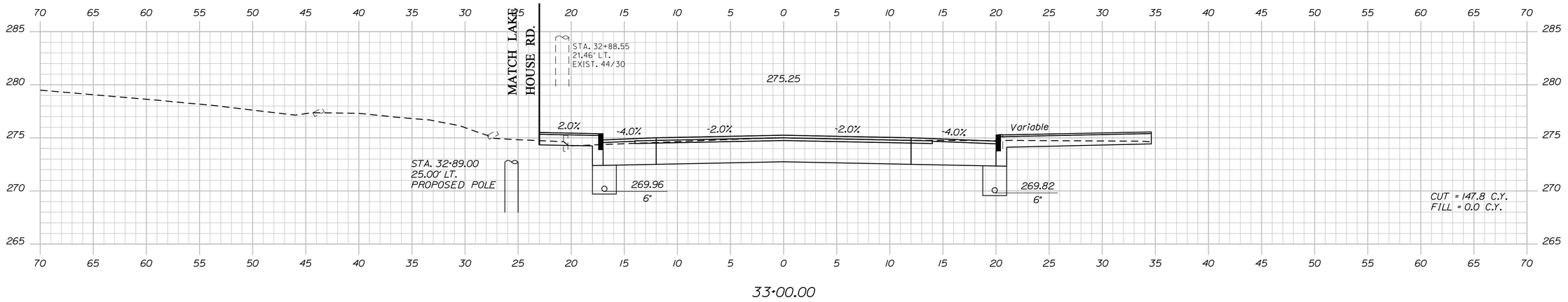

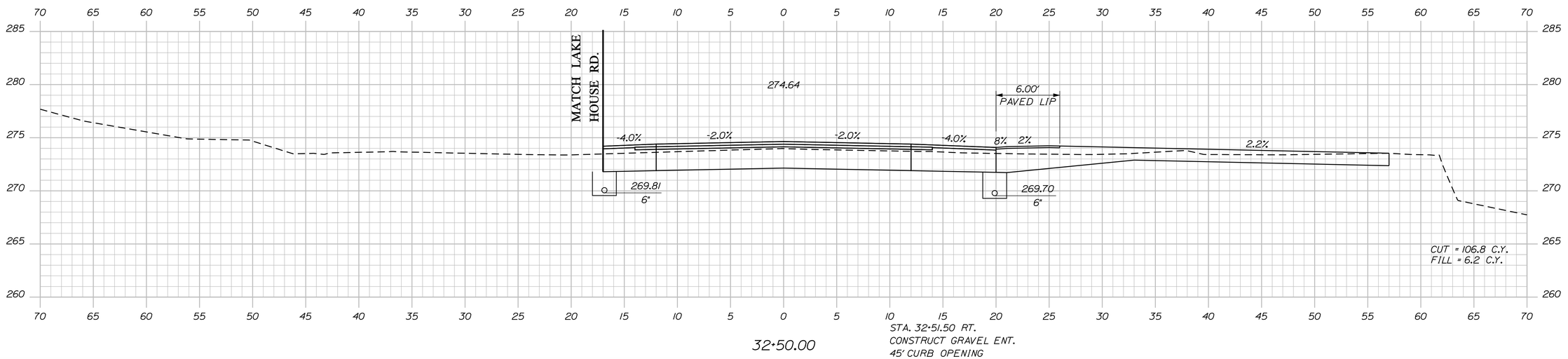

STATE OF MAINE
DEPARTMENT OF TRANSPORTATION

BH-A106(000)

PIN 11060.00

HIGHWAY PLANS

		DATE
PROJ. MANAGER	J. Wentworth	
DESIGNDETAILED	A. Mousseou	July 2010
CHECKEDREVIEWED	bt-tron	------
DESIGN2DETAILED2	-----	------
DESIGN3DETAILED3	-----	------
REVISIONS 1	-----	------
REVISIONS 2	-----	------
REVISIONS 3	-----	------
REVISIONS 4	-----	------
FIELD CHANGES	-----	------

SIGNATURE

P.E. NUMBER

DATE

NAPLES
ROUTES 11\302

CROSS SECTIONS

SHEET NUMBER

58

OF 160

Sta. 32+50.00 to Sta. 33+50.00

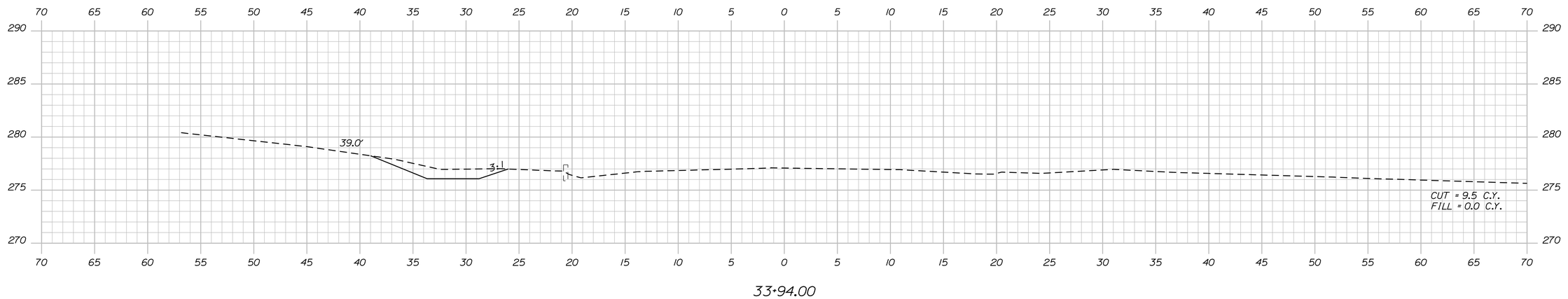

33+94.00

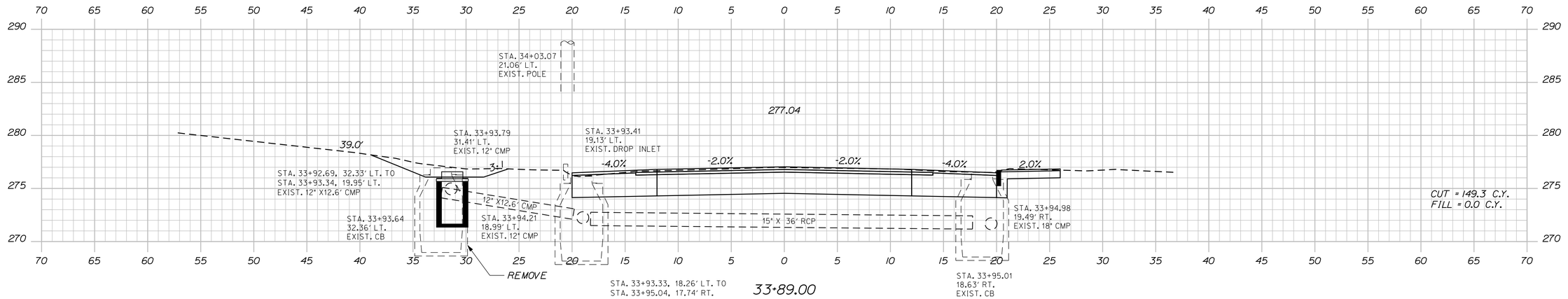

33+89.00

STA. 33+45.00 TO STA. 33+97.00
CONSTRUCT GRASS-LINED
SEDIMENT TRAP

(CB#39) STA. 33+93.50, 31.3' LT.
CONSTRUCT CB TYPE F4
GRATE ELV. = 271.5
TIE INTO EXISTING CB
DITCH ELEVATION TO BE
6" BELOW GRATE ELEVATION

STATE OF MAINE
DEPARTMENT OF TRANSPORTATION

BH-A106(000)

PIN
11060.00

HIGHWAY PLANS

		BY	DATE
PROJ. MANAGER	J. Wentworth		
DESIGNDETAILED	A. Mousseau	bt-tron	July 2010
CHECKEDREVIEWED			
DESIGN2DETAILED2			
DESIGN3DETAILED3			
REVISIONS 1			
REVISIONS 2			
REVISIONS 3			
REVISIONS 4			
FIELD CHANGES			

SIGNATURE

P.E. NUMBER

DATE

NAPLES
ROUTES 11\302

CROSS SECTIONS

SHEET NUMBER

59

OF 160

Sta. 33+89.00 to Sta. 33+94.00

Filename: ...\mslo\059_XSECT_33+89_036.dgn Division: HIGHWAY Username: mark.poulin Date:7/22/2010

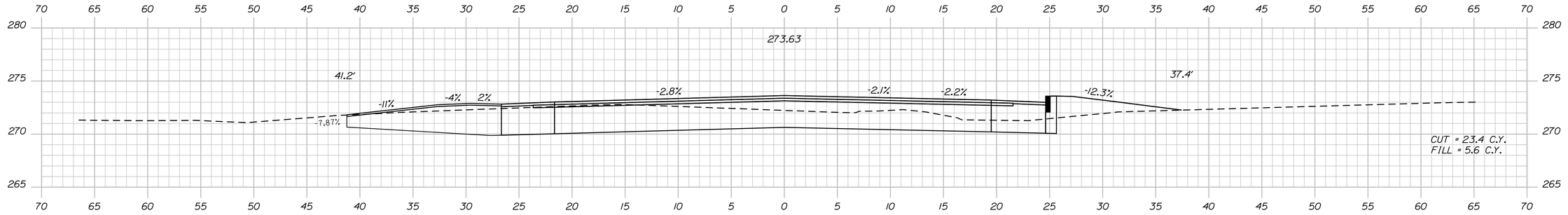

STA. 61+12.50 LT.
CONSTRUCT PAVED ENT.
50' CURB OPENING

61+12.50

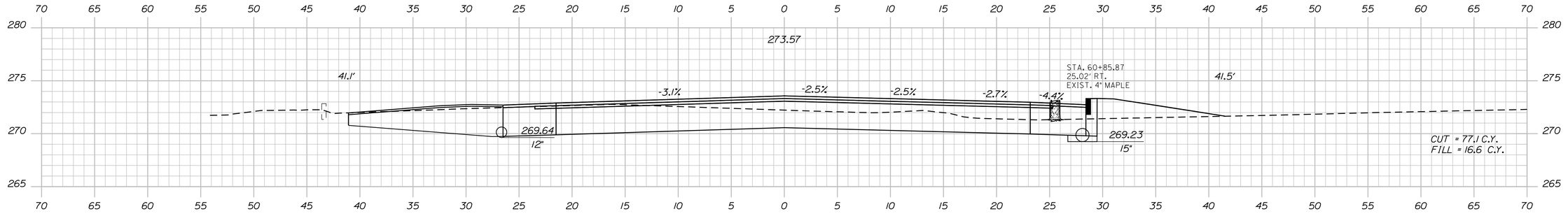

61+00.00

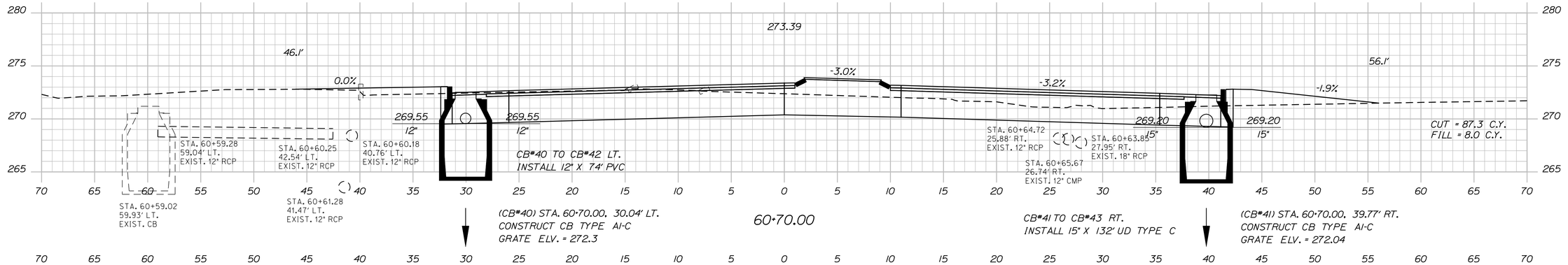

CB#40 TO CB#42 LT.
INSTALL 12" X 74' PVC

STA. 60+59.02
59.93' LT.
EXIST. CB

STA. 60+61.28
41.47' LT.
EXIST. 12" RCP

(CB#40) STA. 60+70.00, 30.04' LT.
CONSTRUCT CB TYPE AI-C
GRATE ELV. = 272.3

60+70.00

CB#41 TO CB#43 RT.
INSTALL 15" X 132' UD TYPE C

(CB#41) STA. 60+70.00, 39.77' RT.
CONSTRUCT CB TYPE AI-C
GRATE ELV. = 272.04

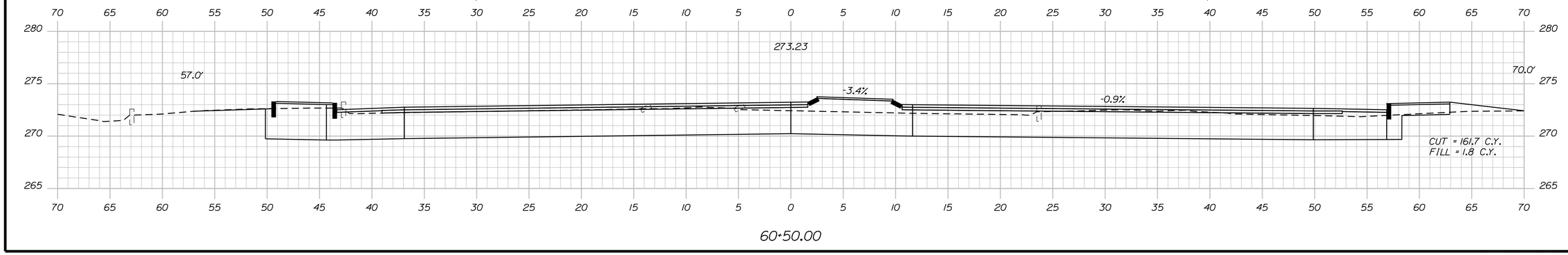

60+50.00

STATE OF MAINE
DEPARTMENT OF TRANSPORTATION

BH-A106(000)

PIN
11060.00

HIGHWAY PLANS

	BY	DATE
J. Wentworth		
A. Mousseau	bt-tron	July 2010
PROJ. MANAGER	-----	-----
DESIGNDETAILED	-----	-----
CHECKEDREVIEWED	-----	-----
DESIGN2DETAILED2	-----	-----
DESIGN3DETAILED3	-----	-----
REVISIONS 1	-----	-----
REVISIONS 2	-----	-----
REVISIONS 3	-----	-----
REVISIONS 4	-----	-----
FIELD CHANGES	-----	-----

SIGNATURE

P.E. NUMBER

DATE

NAPLES
ROUTES 11\302

CROSS SECTIONS

SHEET NUMBER

60

OF 160

Sta. 60+50.00 to Sta. 61+12.50

Filename: ...\msta\060_XSECT_60+50_001.dgn Division: HIGHWAY Username: mark.poulin Date:7/22/2010

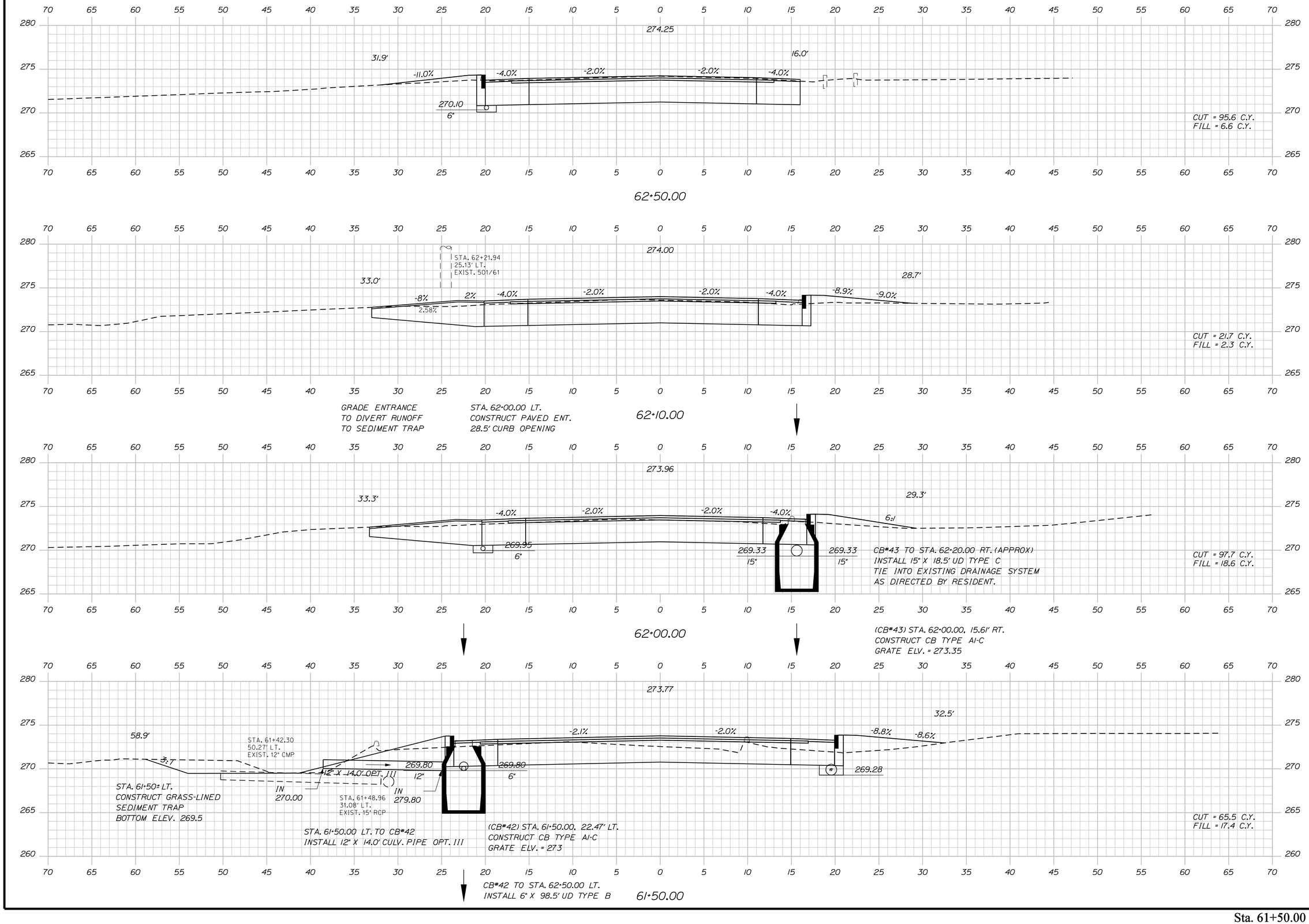

STATE OF MAINE
DEPARTMENT OF TRANSPORTATION

BH-A106(000)

PIN 11060.00

HIGHWAY PLANS

	BY	DATE
PROJ. MANAGER	J. Wentworth	
DESIGNDETAILED	A. Mousseau	July 2010
CHECKEDREVIEWED	bt-tron	------
DESIGNDETAILED2	-----	------
DESIGNDETAILED3	-----	------
REVISIONS 1	-----	------
REVISIONS 2	-----	------
REVISIONS 3	-----	------
REVISIONS 4	-----	------
FIELD CHANGES	-----	------

SIGNATURE ------

P.E. NUMBER ------

DATE ------

NAPLES
ROUTES 11\302

CROSS SECTIONS

SHEET NUMBER

61

OF 160

Sta. 61+50.00 to Sta. 62+50.00

Filename: ...\msto\061_XSECT_61+50_002.dgn Division: HIGHWAY Username: mark.poulin Date:7/22/2010

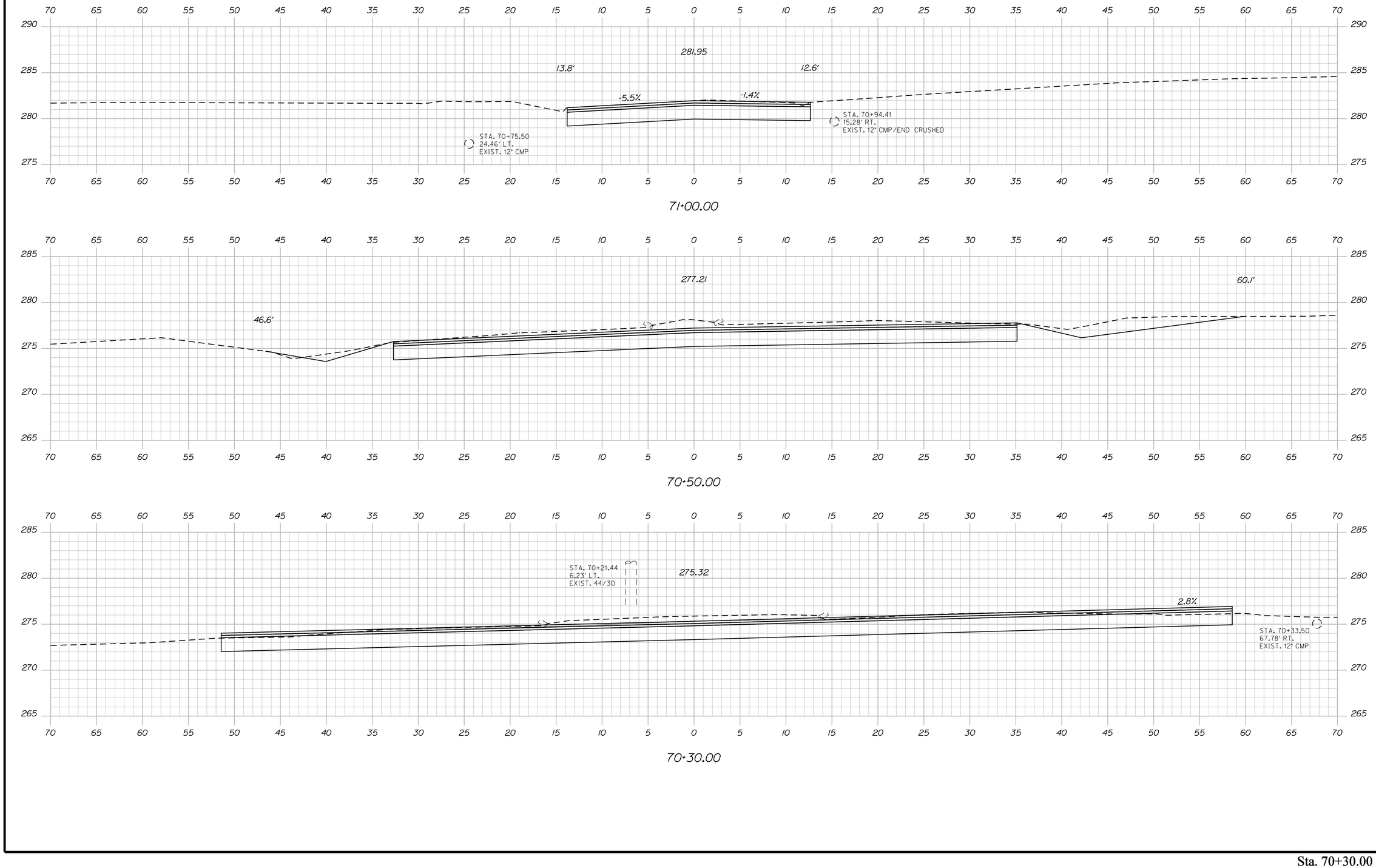

Sta. 70+30.00 to Sta. 71+00.00

STATE OF MAINE
DEPARTMENT OF TRANSPORTATION

BH-A106(000)

PIN
11060.00

HIGHWAY PLANS

PROJ. MANAGER	J. Wentworth	BY	DATE
DESIGNDETAILED	A. Mousseau	bt-tron	July 2010
CHECKEDREVIEWED	-----	-----	-----
DESIGN2DETAILED2	-----	--	-----
DESIGN3DETAILED3	-----	----------	-----
REVISIONS 1	-----	-----	-----
REVISIONS 2	-----	-----	-----
REVISIONS 3	-----	-----	-----
REVISIONS 4	-----	-----	-----
FIELD CHANGES	-----	-----	-----

SIGNATURE

P.E. NUMBER

DATE

NAPLES
ROUTES 11\302

CROSS SECTIONS

SHEET NUMBER

62

OF 160

Filename: ...\mslo\062_XSECT_70+30_003.dgn Division: HIGHWAY Username: mark.poulin Date:7/22/2010

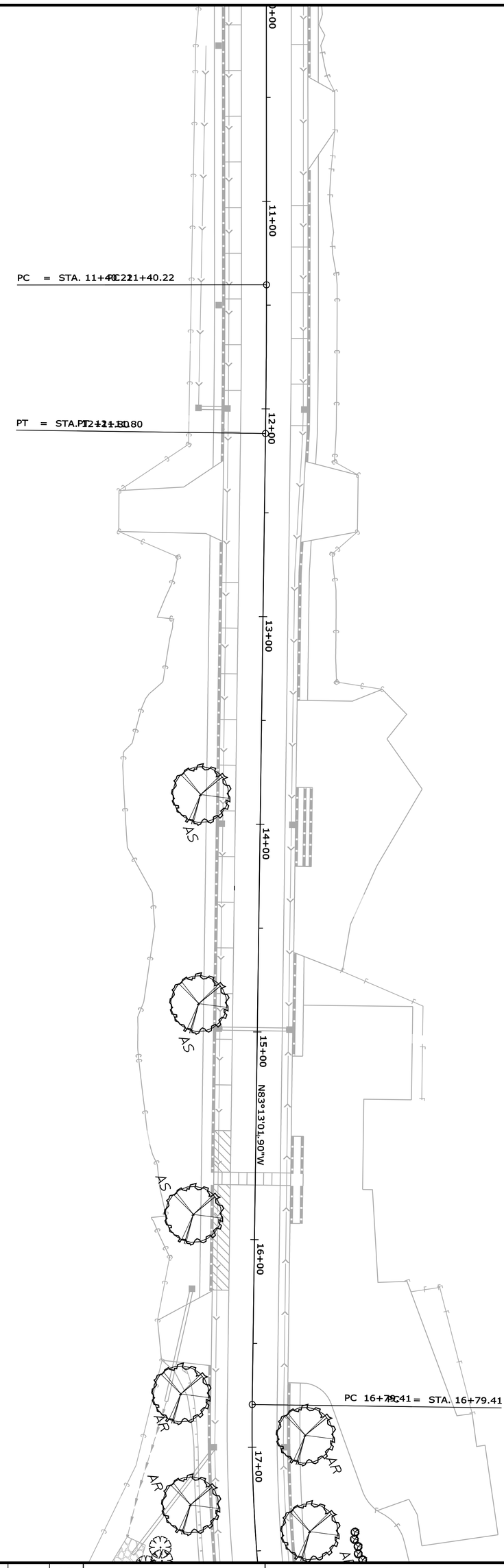

LEGEND

- SOD/PLANTED LAWN AREA
- 16' STAMPED COLORED PATTERN
- 24" STAMPED COLORED CONCRETE BORDER
- 8' STAMPED COLORED CONCRETE PATTERN
- 42" PICKET RAIL (RAILING A)*
- 46" 2 BAR RAILING ON CONCRETE WALL (RAILING B)*
- CONCRETE POST *

* SEE SHEET PILE WALL RAILING DETAILS (SHEETS 139 -141)

ACTUAL LOCATIONS OF ALL PLANTINGS WILL BE DETERMINED IN THE FIELD BY THE MAINEDOT LANDSCAPE ARCHITECT.

PROJ. MANAGER	J. Wentworth	BY	DATE
DESIGN-DETAILED	K Cooper	bt-tran	July 2010
CHECKED-REVIEWED	_____	_____	_____
DESIGN2-DETAILED2	_____	__	_____
DESIGN3-DETAILED3	_____	_____	_____
REVISIONS 1	_____		_____
REVISIONS 2	_____		_____
REVISIONS 3	_____		_____
REVISIONS 4	_____		_____
FIELD CHANGES	_____		_____

SIGNATURE

P.E. NUMBER

DATE

SHEET NUMBER 63 OF 160

NAPLES
ROUTES 11\302

LANDSCAPE PLANS

STATE OF MAINE
DEPARTMENT OF TRANSPORTATION

BH-A106(000)

PIN
11060.00

HIGHWAY PLANS

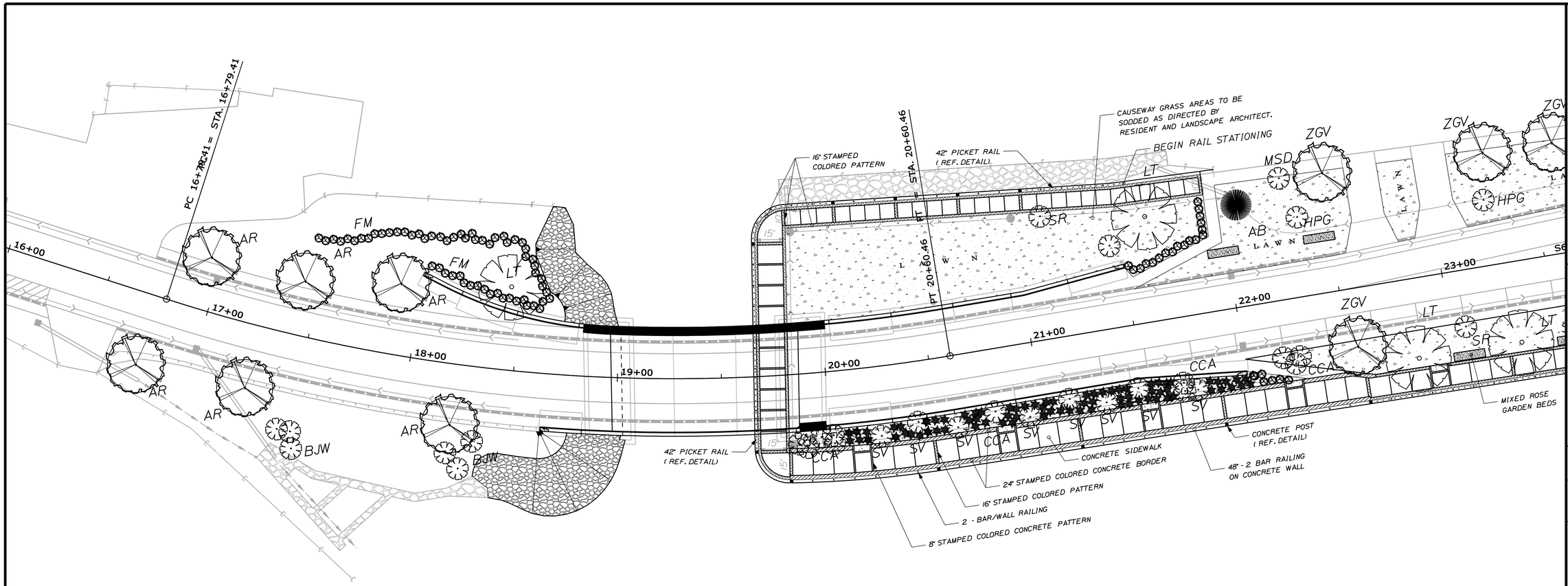

SHEET PILE WALL RAILING TYPE

SEE SHEET PILE WALL RAILING DETAILS (SHEETS 139 - 141)

STATIONS ARE IN ORDER ALONG THE WALL STARTING AT STA. 21+56 LT. AS NOTED.

RAILING A - PICKET RAIL

STA. 21+56 LT. TO STA. 21+07 LT.
STA. 20+12 LT. TO STA. 19+65 RT.
STA. 22+56 RT. TO STA. 26+06 RT.
STA. 29+81 RT. TO STA. 31+84 RT.

RAILING B - 2 BAR ON WALL

STA. 21+07 LT. TO STA. 20+12 LT.
STA. 19+65 RT. TO STA. 22+60 RT.
STA. 26+06 RT. TO STA. 29+81 RT.
STA. 31+84 RT. TO STA. 32+12 RT.

LEGEND

- SOD/PLANTED LAWN AREA
- 16" STAMPED COLORED PATTERN
- 24" STAMPED COLORED CONCRETE BORDER
- 8" STAMPED COLORED CONCRETE PATTERN
- 42" PICKET RAIL (RAILING A) *
- 46" 2 BAR RAILING ON CONCRETE WALL (RAILING B) *
- CONCRETE POST *

* SEE SHEET PILE WALL RAILING DETAILS (SHEETS 139 -141)

ACTUAL LOCATIONS OF ALL PLANTINGS WILL BE DETERMINED IN THE FIELD BY THE MAINEDOT LANDSCAPE ARCHITECT.

CONCRETE WALK NOTES

1. PLANTER SPACING:

70 FT +/- FROM STA. 19+75 RT TO STA. 25+75 RT.
35 FT +/- FROM STA. 25+75 RT TO 31+75 RT.

ACTUAL PLANTER LOCATIONS WILL BE DICTATED BY PROPOSED LIGHT POLE LOCATIONS AND AS DIRECTED BY THE RESIDENT/LANDSCAPE ARCHITECT.

2. PATTERNED AREAS ON THE TYPICAL DETAIL WILL BE COLORED. BRICK SOLDIER COURSE OR BAND STACKED BRICK AS NOTED.

3. EXPANSION JOINTS SHALL BE PLACED AT A 20 FT MAXIMUM SPACING, AND SHALL BE FILLED WITH 1/2 INCH DEEP JOINT SEALER.

4. CONTROL JOINTS SHALL BE PLACED AT A 6 FT MAXIMUM SPACING, AND SHALL BE SAW CUT 1 INCH DEEP.

5. PATTERNED SECTIONS SHALL BE DOWELED TO ADJACENT SLABS. SPACING SHALL BE AS DIRECTED BY THE RESIDENT. DOWELS WILL EXTEND 12" INTO ADJACENT CONCRETE. 12" INTO BAND STACKED BRICK STAMPED SECTIONS. 5" INTO BRICK SOLDIER COURSE SECTIONS PARALLEL TO PLANTING AREA, AND AS SHOWN ON THE TYPICAL AT ALL OTHER LOCATIONS. PAYMENT WILL BE INCIDENTAL TO CONCRETE ITEMS.

6. ALL JOINTS WILL BE REGULARLY SPACED AT EVEN INCREMENTS BETWEEN PLANTERS. NO ODD SIZED SECTIONS WILL BE PERMITTED.

CONCRETE WALK TYPICAL DETAIL

NOT TO SCALE

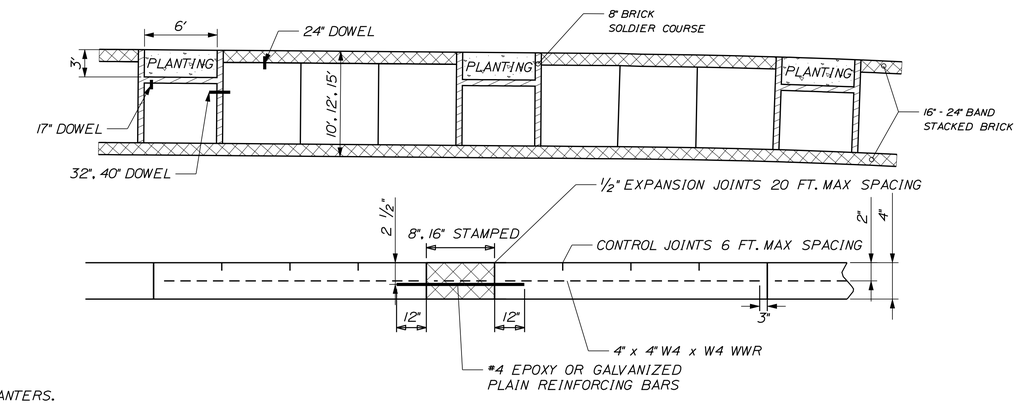

STATE OF MAINE
DEPARTMENT OF TRANSPORTATION

BH-A106(000)

PIN 11060.00

HIGHWAY PLANS

		BY	DATE
PROJ. MANAGER	J. Wentworth		
DESIGN-DETAILED	K. Cooper	bt-tron	July 2010
CHECKED-REVIEWED	-----	-----	-----
DESIGN2-DETAILED2	-----	-----	-----
DESIGN3-DETAILED3	-----	-----	-----
REVISIONS 1	-----	-----	-----
REVISIONS 2	-----	-----	-----
REVISIONS 3	-----	-----	-----
REVISIONS 4	-----	-----	-----
FIELD CHANGES	-----	-----	-----

SIGNATURE

P.E. NUMBER

DATE

NAPLES
ROUTES 11\302

LANDSCAPE PLANS

SHEET NUMBER

64

OF 160

Filename: ...\mslo\064_LandscapePlan2.dgn Division: HIGHWAY Date:7/26/2010 Username: allee.mousseau

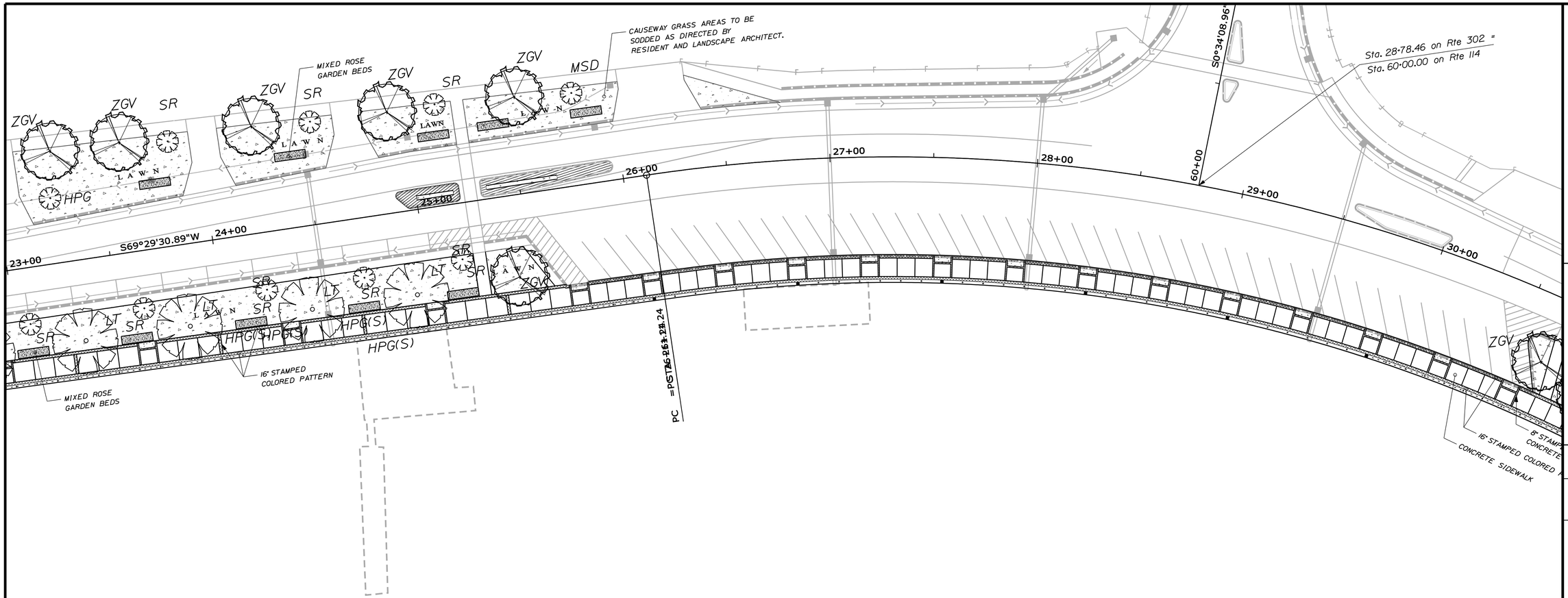

LEGEND

- SOD/PLANTED LAWN AREA
- 16" STAMPED COLORED PATTERN
- 24" STAMPED COLORED CONCRETE BORDER
- 8" STAMPED COLORED CONCRETE PATTERN
- 42" PICKET RAIL (RAILING A) *
- 46" 2 BAR RAILING ON CONCRETE WALL (RAILING B) *
- CONCRETE POST *

* SEE SHEET PILE WALL RAILING DETAILS (SHEETS 139 -141)

ACTUAL LOCATIONS OF ALL PLANTINGS WILL BE DETERMINED IN THE FIELD BY THE MAINEDOT LANDSCAPE ARCHITECT.

STATE OF MAINE
DEPARTMENT OF TRANSPORTATION

BH-A106(000)

PIN 11060.00

HIGHWAY PLANS

PROJ. MANAGER	J. Wentworth	BY	
DESIGN-DETAILED	K. Cooper	bt-tron	July 2010
CHECKED-REVIEWED	-----	-----	-----
DESIGN2-DETAILED2	-----	--	-----
DESIGN3-DETAILED3	-----	----------	-----
REVISIONS 1	-----	-----	-----
REVISIONS 2	-----	-----	-----
REVISIONS 3	-----	-----	-----
REVISIONS 4	-----	-----	-----
FIELD CHANGES	-----	-----	-----

SIGNATURE

P.E. NUMBER

DATE

NAPLES
ROUTES 11\302

LANDSCAPE PLANS

SHEET NUMBER

65

OF 160

Filename: ...\mst0\065_Landscape_Plan3.dgn Division: HIGHWAY Username: allee.mousseau Date:7/26/2010

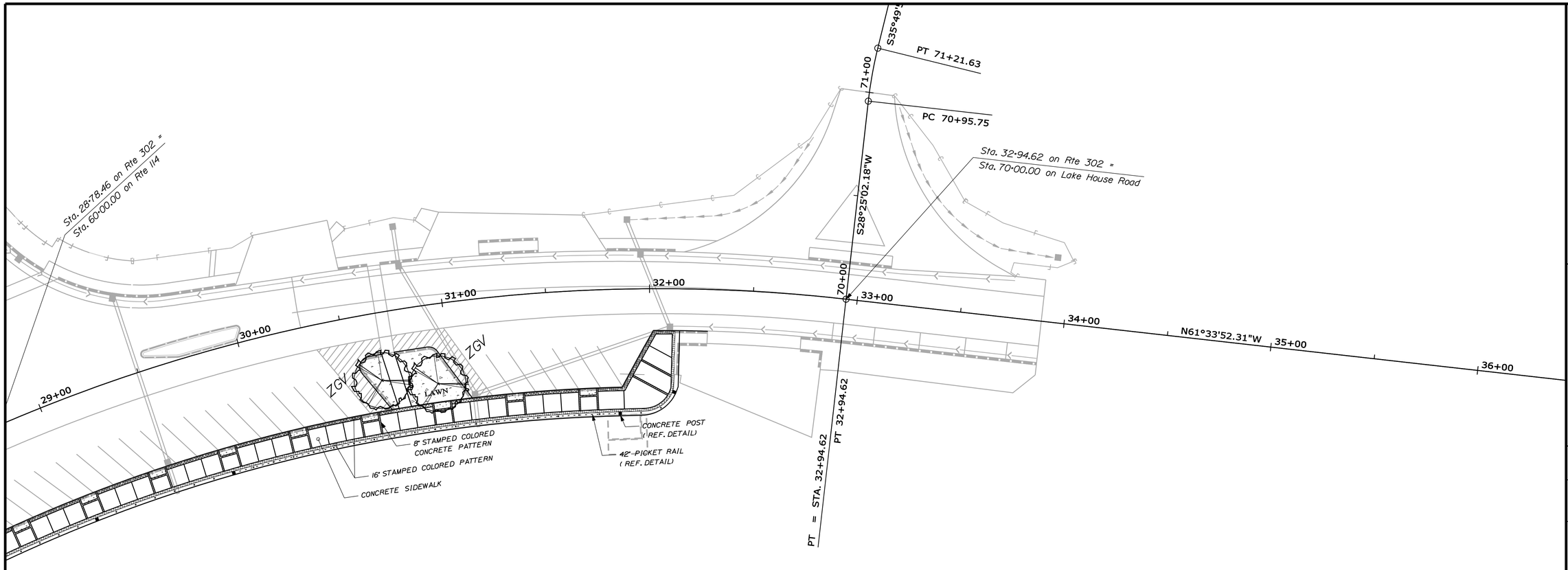

LEGEND

- SOD/PLANTED LAWN AREA
- 16' STAMPED COLORED PATTERN
- 24' STAMPED COLORED CONCRETE BORDER
- 8' STAMPED COLORED CONCRETE PATTERN
- 42" PICKET RAIL (RAILING A) *
- 46" 2 BAR RAILING ON CONCRETE WALL (RAILING B) *
- CONCRETE POST *

* SEE SHEET PILE WALL RAILING DETAILS (SHEETS 139 -141)

ACTUAL LOCATIONS OF ALL PLANTINGS WILL BE DETERMINED IN THE FIELD BY THE MAINEDOT LANDSCAPE ARCHITECT.

STATE OF MAINE
DEPARTMENT OF TRANSPORTATION

BH-A106(000)

PIN
11060.00

HIGHWAY PLANS

PROJ. MANAGER	J. Wentworth	BY	DATE
DESIGN-DETAILED	K. Cooper	bt-tron	July 2010
CHECKED-REVIEWED	------	------	SIGNATURE
DESIGN2-DETAILED2	------	--	------
DESIGN3-DETAILED3	------	----------	P.E. NUMBER
REVISIONS 1	------	------	------
REVISIONS 2	------	------	------
REVISIONS 3	------	------	DATE
REVISIONS 4	------	------	------
FIELD CHANGES	------	------	------

NAPLES
ROUTES 11\302

LANDSCAPE PLANS

SHEET NUMBER

66

OF 160

Filename: ...\mst0\066_Landscape_Plan4.dgn Division: HIGHWAY Username: allee.mousseau Date:7/26/2010

Filename: ...\mslo\067_Landscape_NOTES_5.dgn Division: HIGHWAY Date:7/26/2010 Username: allee.mousseau

PLANT LIST

HAP	6	HYDRANGEA A. PETIOLARIS	CLIMBING HYDRANGEA 18"- 24" 1 GAL.
HPGS	9	HYDRANGEA P.G. STAND.	'PG' SNOWBALL BUSH 4' – 5' 7GAL. STANDARD FORM CONT.
HPG	9	HYDRANGEA P.G. SHRUB	'PG' SNOWBALL BUSH 3' – 4' 7GAL. SHRUB FORM CONT.
FM	60	FORSYTHIA 'MEADOWLARK	'MEADOWLARK' FORSYTHIA 2' – 3' CONT.
RM	96	ROSA MEIDILAND VARS.	'KNOCK-OUT' MEIDILAND ROSE 18" – 24" 24 RED 'DOUBLE KNOCK-OUT' 24 ' PINK DOUBLE KNOCK-OUT' 24 'BLUSHING KNOCK-OUT' 24 'SUNNY KNOCK-OUT'
RR	168	ROSA RUGOSA 'THERESA B.'	'THERESA B.' BEACH ROSE 2' – 3' CONT.
PS	18	PHILADELPHUS 'SNOWFLAKE'	'SNOWFLAKE' MOCK-ORANGE 2' – 3' CONT.
BEB	24	BUDDLEIA 'EMPIRE BLUE'	'EMPIRE BLUE' BUTTERFLY BUSH
BWP	24	BUDDLEIA 'WHITE PROFUSION'	'WHITE PROFUSION' BUTTERFLY BUSH
HH	480	HEMEROCALLIS HYBRID VARS	HYBRID DAYLILIES 1 GALLON CONT. 120 HAPPY RETURNS 120 CATHERINE WOODBURY 120 BAMA MUSIC 120 PINK DAMASK
VM	2,400	VINCA MINOR	PERIWINKLE 2 ¼" PLUGS
LT	6	LIRIODENDRON TULIPIFERA	TULIP TREE 3½" – 4" CAL. B&B
ZGV	12	ZELKOVA 'GREEN VASE'	'GREEN VASE' ZELKOVA 3 ½" – 4" CAL. B&B
SR	12	SYRINGA RETICULATA 'IVORY SILK'	'IVORY SILK' JAPANESE TREE LILAC 2½" – 3" CAL. B&B
BW	6	BETULA 'WHITESPIRE'	'WHITESPIRE' BIRCH 2½" – 3" CAL. B&B
AB	1	ABIES BALSAMEA	BALSAM FIR 10' – 12' B&B
CA	12	CERCIS ALBA	WHITE REDBUD 5' – 6' CLUMP FORM B&B
AS	6	ACER SACCHARUM 'LEGACY'	'LEGACY' SUGAR MAPLE 2" – 2½" CAL. B&B
AR	6	ACER RUBRUM ' OCTOBER GLORY'	RED MAPLE 2" – 2½" CAL. B&B
MDW	6	MALUS 'DONALD WYMAN'	'DONALD WYMAN' CRAB APPLE 2" – 2½" CAL.
MSD	6	MALUS 'SNOWDRIFT'	'SNOWDRIFT'CRAB APPLE 2" – 2 ½" CAL. B&B
SV	24	SYRINGA VULGARIS VARS.	HYBRID FLOWERING LILAC 4' – 5' 3 'A. LUDWIG SPAETH' 3 'ALBERT HOLDEN' 3 ' BETSY ROSS' 3 'CHARLES JOLY' 3 'PRESIDENT LINCOLN' 3 'DWIGHT D. EISENHOWER' 3 'FLOWER CITY' 3 'MONGE'

STATE OF MAINE
DEPARTMENT OF TRANSPORTATION

BH-A106(000)

PIN
11060.00

HIGHWAY PLANS

PROJ. MANAGER	J. Wentworth	BY	DATE
DESIGN-DETAILED	K. Cooper	bt-tron	July 2010
CHECKED-REVIEWED	-----	-----	-----
DESIGN2-DETAILED2	-----	-----	-----
DESIGN3-DETAILED3	-----	-----	-----
REVISIONS 1	-----	-----	-----
REVISIONS 2	-----	-----	-----
REVISIONS 3	-----	-----	-----
REVISIONS 4	-----	-----	-----
FIELD CHANGES	-----	-----	-----

SIGNATURE

P.E. NUMBER

DATE

NAPLES
ROUTES 11\302

LANDSCAPE PLANS

SHEET NUMBER

67

OF 160

Filename: ...\068_GeneralBridge Plan.dgn Division: BRIDGE Username: dana.damren Date:7/20/2010

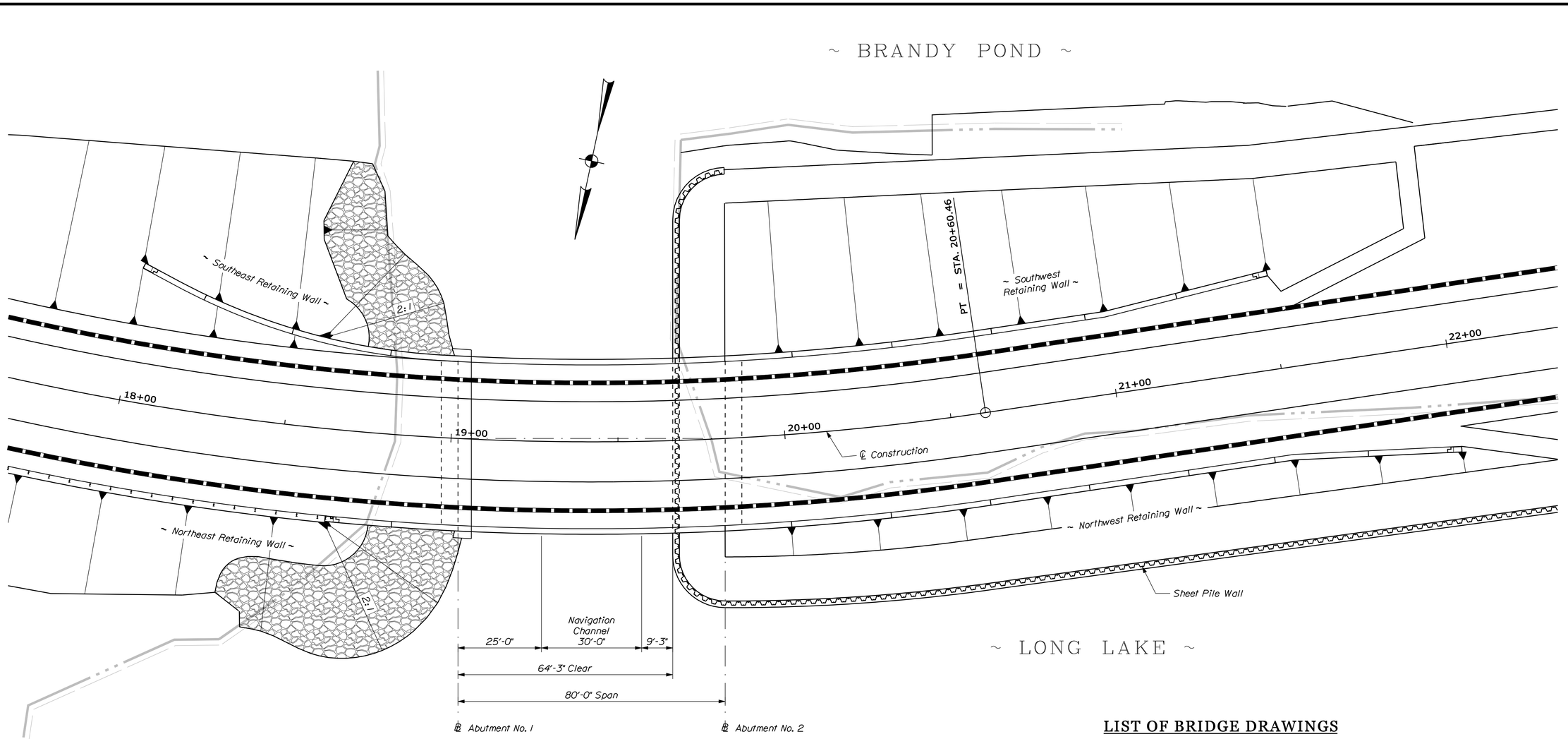

GENERAL BRIDGE PLAN

SPECIFICATIONS

Design: Load and Resistance Factor Design per AASHTO LRFD Bridge Design Specifications, Fourth Edition 2007 and Interim Specifications through 2009.

DESIGN LOADING

Live Load ..... HL - 93 Modified

HYDROLOGIC DATA

Drainage Area	82 sq mi
Design Discharge (Q50)	1175 cfs
Check Discharge (Q100)	1246 cfs
Scour Check Discharge (Q500)	1355 cfs
Headwater Elevation (Q50)	268.42 ft
Headwater Elevation (Q100)	268.53 ft
Discharge Velocity (Q50)	8.54 fps
Discharge Velocity (Q100)	8.69 fps

MATERIALS

Concrete:	
Curbs & Transition Barriers	Class "LP"
Seals	Class "S"
All Other	Class "A"
Reinforcing Steel	ASTM A 615/A 615M, Grade 60

BASIC DESIGN STRESSES

Concrete	f 'c = 4,350 psi
Reinforcing Steel	f y = 60,000 psi

LIST OF BRIDGE DRAWINGS

General Bridge Plan 68
Bridge Elevations 69
Decorative Surface Treatment 70
Arch Profile 71
Bridge Layout Plan 72
Arch Pile Plan 73
Arch Seal Plan 74
Arch Footing Plan 75
Arch Abutment Plan 76
Arch Abutment No. 1 Elevations 77
Arch Abutment No. 2 Elevations 78
Arch Plan 79
Arch Longitudinal Section 80
Arch Transverse Sections 81
Arch Details 82
Arch Horizontal Geometry 83
Arch Rail Curb Elevations 84
Arch Vertical Geometry 85
Arch Reinforcing ..... 86 - 98
Retaining Wall Footing Plan 99
Retaining Wall Elevations ..... 100 - 102
Retaining Wall Typical Sections 103
Retaining Wall Reinforcing ..... 104 - 111
Transition Barriers ..... 112 - 113
Bridge Railing Layout Plan ..... 114 - 117
Bridge Railing Details 118- 119
Arch Vertical Curb Details 120
Reinforcing Steel Schedule 121

STATE OF MAINE
DEPARTMENT OF TRANSPORTATION

BH-A106(000)

PIN 11060.00

BRIDGE NO. 2047

BRIDGE PLANS

		BY	DATE
PROJ. MANAGER	J. Wentworth		
DESIGN-DETAILED	J. Folsom	D. Damren	July 2010
CHECKED-REVIEWED	-----	-----	-----
DESIGN2-DETAILED2	-----	--	-----
DESIGN3-DETAILED3	-----	-----	-----
REVISIONS 1	-----	-----	-----
REVISIONS 2	-----	-----	-----
REVISIONS 3	-----	-----	-----
REVISIONS 4	-----	-----	-----
FIELD CHANGES	-----	-----	-----

SIGNATURE

P.E. NUMBER

DATE

NAPLES BAY BRIDGE
CHUTES RIVER
NAPLES CUMBERLAND COUNTY

GENERAL BRIDGE PLAN

SHEET NUMBER

68

OF 160

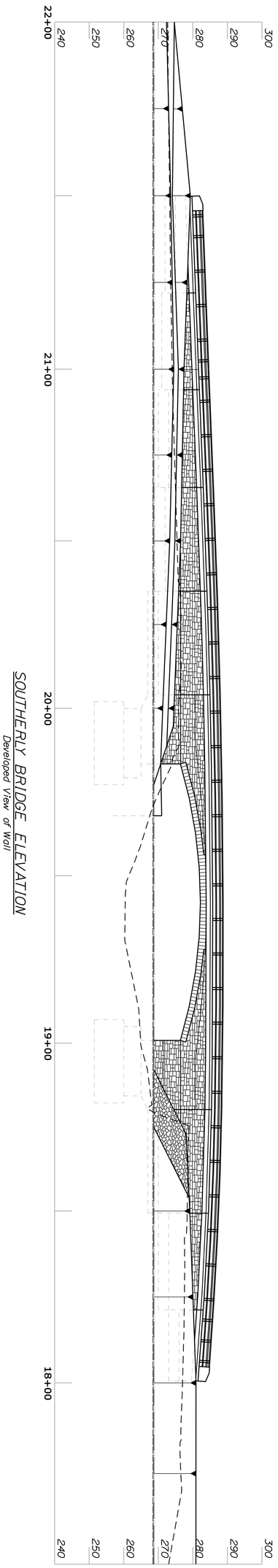

SOUTHERLY BRIDGE ELEVATION

Developed View of Wall

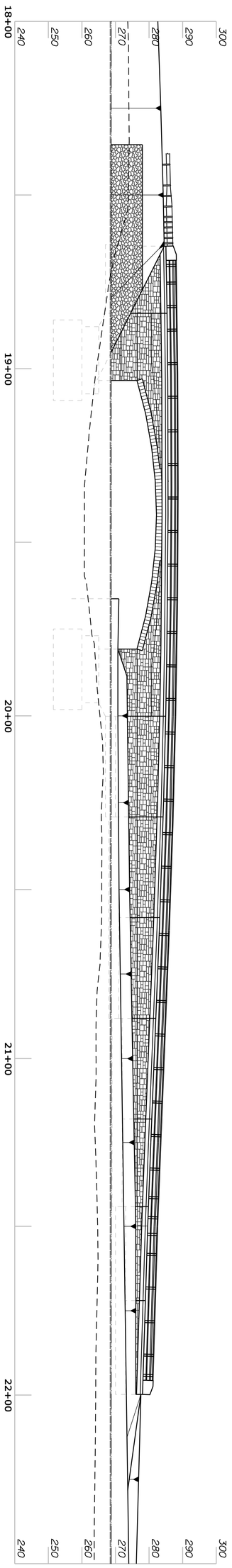

NORTHERLY BRIDGE ELEVATION

Developed View of Wall

NAPLES BAY BRIDGE
CHUTES RIVER
NAPLES CUMBERLAND COUNTY

BRIDGE ELEVATIONS

PROJ. MANAGER	J. Wentworth	BY	DATE
DESIGN-DETAILED	J. Folsom	D. Damren	July 2010
CHECKED-REVIEWED	_____	_____	_____
DESIGN2-DETAILED2	_____	__	_____
DESIGN3-DETAILED3	_____	_____	_____
REVISIONS 1	_____		_____
REVISIONS 2	_____		_____
REVISIONS 3	_____		_____
REVISIONS 4	_____		_____
FIELD CHANGES	_____		_____

SIGNATURE

P.E. NUMBER

DATE

STATE OF MAINE
DEPARTMENT OF TRANSPORTATION

BH-A106(000)

BRIDGE NO. 2047 PIN 11060.00 BRIDGE PLANS

SHEET NUMBER 69 OF 160

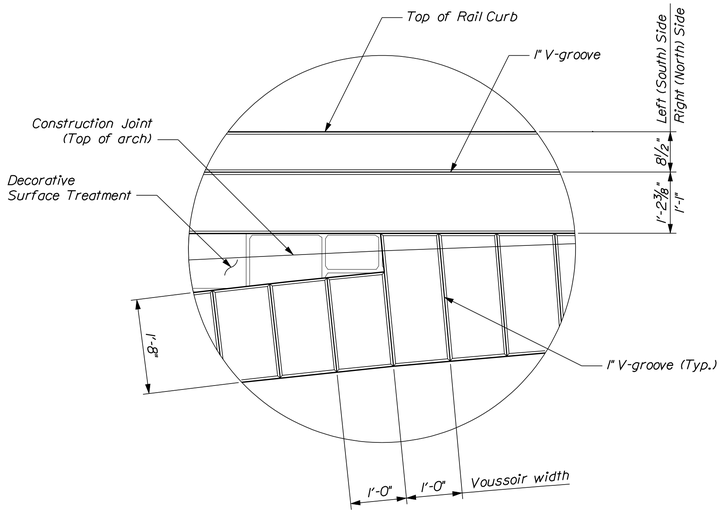

VOUSSOIR DETAIL

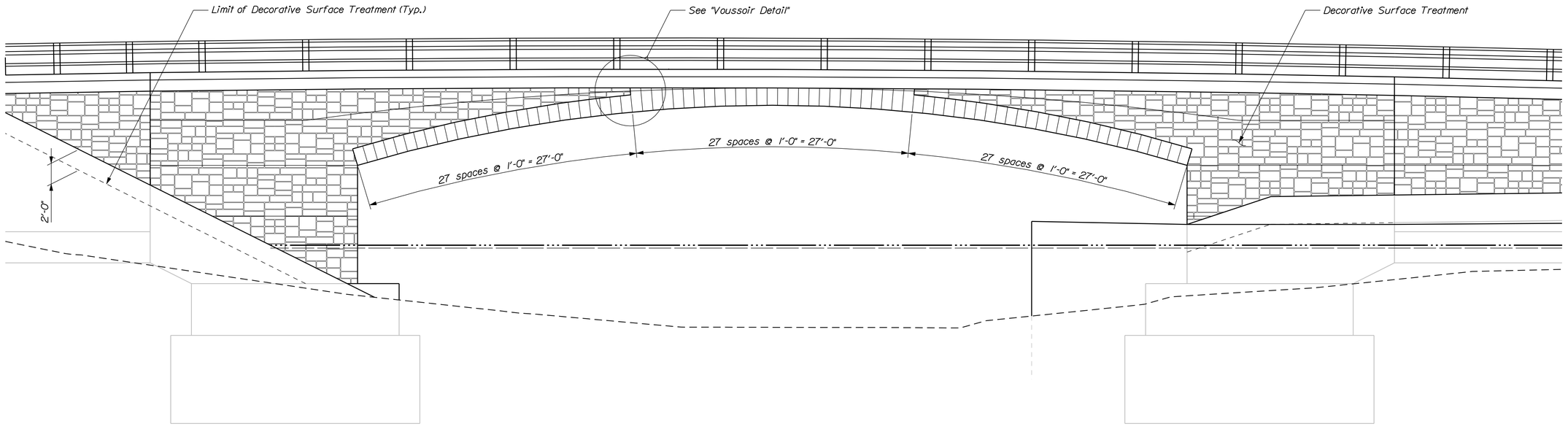

TYPICAL BRIDGE ELEVATION

PROJ. MANAGER	J. Wentworth	BY	DATE
DESIGN-DETAILED	J. Folsom	D. Domren	July 2010
CHECKED-REVIEWED	-----	-----	-----
DESIGN2-DETAILED2	-----	--	-----
DESIGN3-DETAILED3	-----	----------	-----
REVISIONS 1	-----	-----	-----
REVISIONS 2	-----	-----	-----
REVISIONS 3	-----	-----	-----
REVISIONS 4	-----	-----	-----
FIELD CHANGES	-----	-----	-----

SIGNATURE

P.E. NUMBER

DATE

STATE OF MAINE
DEPARTMENT OF TRANSPORTATION

BH-A106(000)

PIN **11060.00**

BRIDGE NO. 2047

BRIDGE PLANS

NAPLES BAY BRIDGE
CHUTES RIVER
CUMBERLAND COUNTY
NAPLES

DECORATIVE SURF. TREAT.

SHEET NUMBER

70

OF 160

Filename: ...\070_Decorative Surface Treatment.dgn division: BRIDGE Username: dana.domren Date:7/20/2010

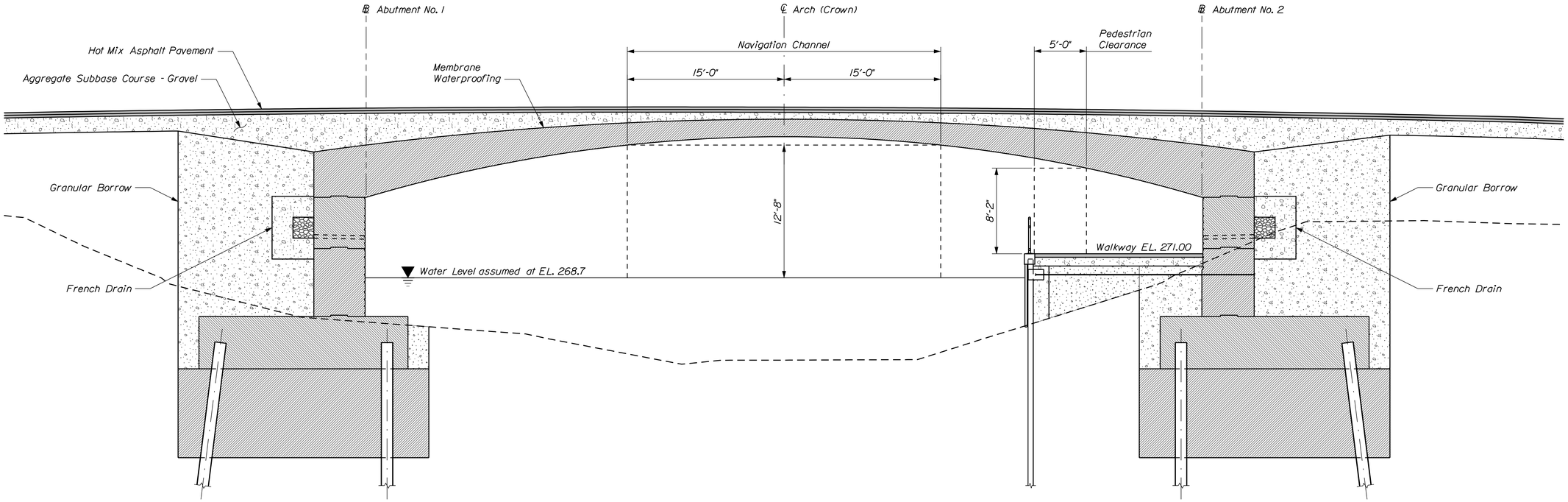

GENERAL BRIDGE PROFILE

GENERAL CONSTRUCTION NOTES

1. All embankment material, except as otherwise shown, placed below EL. XX shall be Granular Borrow meeting the requirements of Subsection 703.19, Material for Underwater Backfill.

2. Place riprap on sideslopes up to EL. 278.

3. Place a 24-in. wide strip of Temporary Erosion Control Blanket on the sideslopes along the top of the riprap and behind the wingwalls.

4. Protective Coating for Concrete Surfaces shall be applied to the following areas:

   All exposed surfaces of concrete curbs.
   Fascias down to the decorative surface treatment.
   All exposed surfaces of Concrete Transition Barriers.

5. Project information referred to below may be accessed at the following MaineDOT web address: http://www.maine.gov/mdot/comprehensive-list-projects/project-information.php.

6. The existing bridge plans may be accessed at the MaineDOT web address. The plans are reproductions of the original drawings as prepared for the construction of the bridge. It is very unlikely that the plans will show any construction field changes or any alterations which may have been made to the bridge during its life span.

7. The hydrologic report of the bridge site may be accessed at the MaineDOT web address. The hydrologic report is based on MaineDOT's interpretation of the information obtained for the subject site. No assurance is given that the information or the conclusions of the report will be representative of actual conditions at the time of construction.

8. The project geotechnical report may be accessed at the MaineDOT web address.

9. Geotechnical information furnished or referred to in this plan set is for the use of the Bidders and the Contractor. No assurance is given that the information or interpretations will be representative of actual subsurface conditions at the construction site. MaineDOT will not be responsible for the Bidders' or Contractor's interpretations of, or conclusions drawn from, the geotechnical information. The boring logs contained in the plan set present factual and interpretive subsurface information collected at discrete locations. Data provided may not be representative of the subsurface conditions between the boring locations.

10. The Contractor shall submit a Bridge Demolition Plan to the Resident at least 10 business days prior to the start of demolition work. The plan shall outline the methods and equipment to be used to remove and dispose of all materials included in the existing bridge. No work related to the removal of the bridge shall be undertaken by the Contractor until MaineDOT has reviewed the Bridge Demolition Plan for appropriateness and completeness. Payment for all work necessary for developing, submitting and finalizing the Demolition Plan will be considered incidental to the bridge removal pay item.

11. The existing bridge shall be removed by and become the property of the Contractor. The steel portions of the existing bridge are coated with a lead-based paint system. The Contractor is responsible for the containment, proper management and disposal of all lead-contaminated hazardous waste generated by the process of demolishing the bridge. The Contractor is responsible for implementing appropriate OSHA mandated personal protection standards related to this process. Once the existing bridge is removed, the Contractor is solely responsible for the care, custody and control of the components of the existing bridge and any hazardous waste generated as a result of the storage, recycling or disposal of the bridge components, including lead-coated steel. The Contractor shall recycle or reuse the steel in accordance with the Maine Department of Environmental Protection's "Maine Hazardous Waste Management Regulations," Chapter 850. A copy of this regulation is available at MaineDOT's offices on Child Street in Augusta. Payment for all labor, materials, equipment and other costs required to remove and dispose of the existing bridge will be considered incidental to the bridge removal pay item.

STATE OF MAINE
DEPARTMENT OF TRANSPORTATION

BH-A106(000)

PIN 11060.00

BRIDGE NO. 2047

BRIDGE PLANS

PROJ. MANAGER	J. Wentworth	BY	DATE
DESIGN-DETAILED	J. Folsom	D. Domren	July 2010
CHECKED-REVIEWED	------	------	------
DESIGN2-DETAILED2	------	------	------
DESIGN3-DETAILED3	------	------	------
REVISIONS 1	------	------	------
REVISIONS 2	------	------	------
REVISIONS 3	------	------	------
REVISIONS 4	------	------	------
FIELD CHANGES	------	------	------

SIGNATURE

P.E. NUMBER

DATE

NAPLES BAY BRIDGE
CHUTES RIVER
CUMBERLAND COUNTY
NAPLES

ARCH PROFILE

SHEET NUMBER

71

OF 160

Filename: ...\MSTA\071_Arch Profile.dgn Division: BRIDGE Username: dona.domren Date:7/26/2010

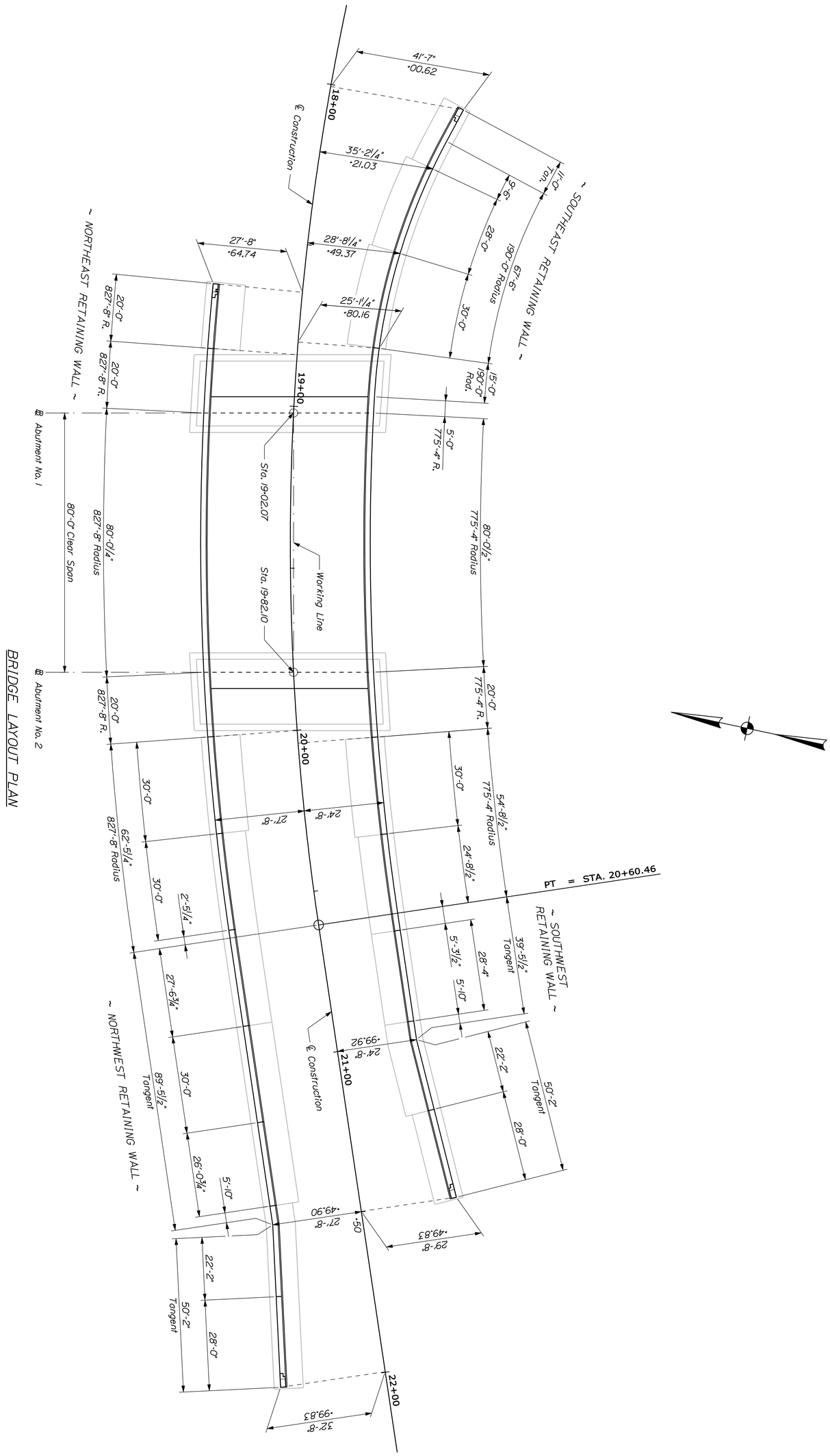

PROJ. MANAGER	J. Wentworth	BY	DATE
DESIGN-DETAILED	J. Folsom	D. Damren	July 2010
CHECKED-REVIEWED	_____	_____	_____
DESIGN2-DETAILED2	_____	__	_____
DESIGN3-DETAILED3	_____	_____	_____
REVISIONS 1	_____		_____
REVISIONS 2	_____		_____
REVISIONS 3	_____		_____
REVISIONS 4	_____		_____
FIELD CHANGES	_____		_____

SIGNATURE

P.E. NUMBER

DATE

NAPLES BAY BRIDGE
CHUTES RIVER
NAPLES CUMBERLAND COUNTY

BRIDGE LAYOUT PLAN

STATE OF MAINE
DEPARTMENT OF TRANSPORTATION

BH-A106(000)

PIN 11060.00

BRIDGE NO. 2047

BRIDGE PLANS

SHEET NUMBER 27 OF 160

Filename: ...\mst0\073_Arch Pile Plan.dgn Division: BRIDGE Username: dana.damren Date:7/20/2010

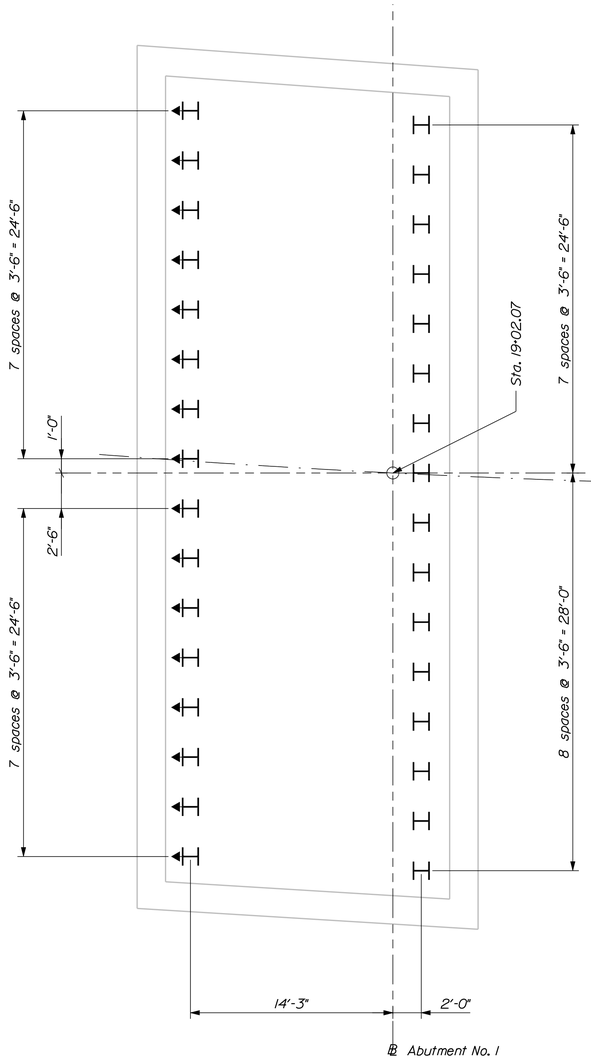

ABUTMENT NO. 1 PILE PLAN
Battered piles shown at top of seal EL. 260.0

PILE NOTES

1. The maximum factored pile load is 455 kips.

2. H-pile material shall be ASTM A 572, Grade 50.

3. Estimate of piles required:

   Abutment No. 1: 32 ~ HP 14x89 @ 60 feet
   Abutment No. 2: 32 ~ HP 14x89 @ 45 feet

4. All piles shall be equipped with a pile tip in accordance with Standard Specifications Section 501.10, Prefabricated Pile Tips.

5. Piles marked with an arrow shall be battered 1.5 in./ft in the direction of the arrow.

6. The Contractor shall perform and submit a wave equation analysis for review and acceptance by the Resident. The maximum allowable driving stress is 0.90 times Fy. The submittal analyses shall include the proposed stopping criteria based on the wave equation analysis and the proposed driving system. The stopping criteria shall include the blows per inch and the number of 1-in. intervals at which pile installation may be terminated. The cost of performing the wave equation analysis will be considered incidental to Item No. 501.92, Pile Driving Equipment Mobilization.

7. The Contractor shall perform 4 dynamic load tests to confirm the ultimate capacity of the piles. One dynamic test shall be performed on each of the first vertical and the first battered production piles driven at each abutment. The required nominal resistance for the pile is the factored axial pile load divided by a resistance factor of 0.65 per LRFD Specifications.

8. It is anticipated that the Contractor will encounter obstructions during pile driving operations. Clearing of obstructions shall be as specified in Section 501 of the Standard Specifications. The method of clearing obstructions shall be approved by the Resident. The cost of clearing obstructions will be considered incidental to related Contract Items.

9. Due to the presence of sloping bedrock at the site, pile walking during driving is possible. No compensation will be made for piles which need to be removed and redriven due to the Contractor's pile driving operations.

10. Piles shall be driven to bedrock in accordance with Section 501 of the Standard Specifications.

11. Piles shall not be out of position by more than 6 inches in any direction.

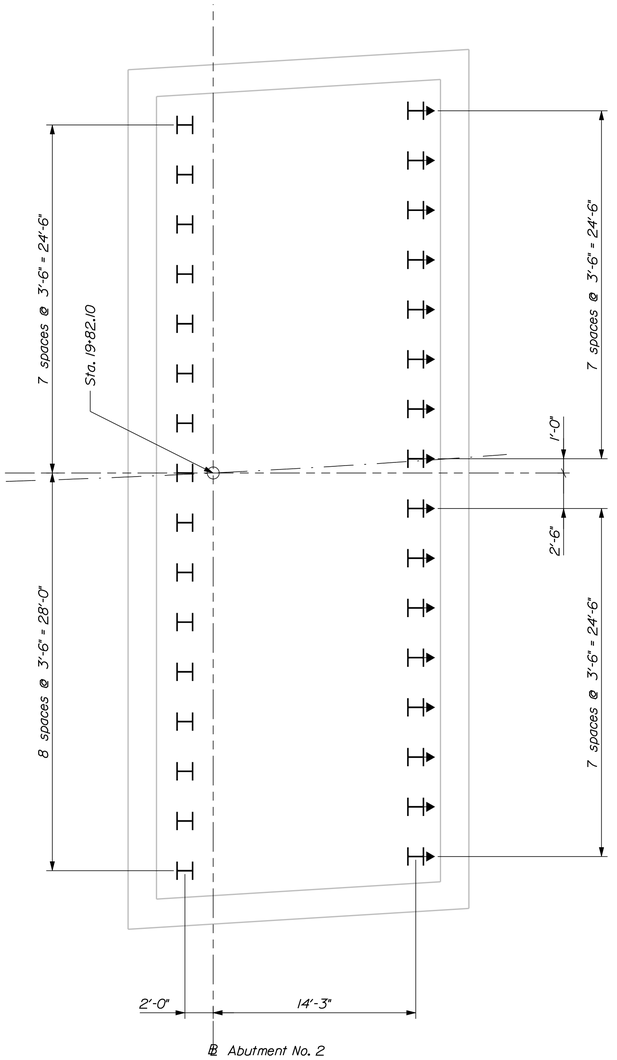

ABUTMENT NO. 2 PILE PLAN
Battered piles shown at top of seal EL. 260.0

STATE OF MAINE
DEPARTMENT OF TRANSPORTATION

BH-A106(000)

PIN 11060.00

BRIDGE NO. 2047 BRIDGE PLANS

		DATE
PROJ. MANAGER	J. Wentworth	
DESIGN-DETAILED	J. Folsom	July 2010
CHECKED-REVIEWED	J. Folsom	------
DESIGN2-DETAILED2	------	------
DESIGN3-DETAILED3	------	------
REVISIONS 1	------	------
REVISIONS 2	------	------
REVISIONS 3	------	------
REVISIONS 4	------	------
FIELD CHANGES	------	------

SIGNATURE

P.E. NUMBER

DATE

NAPLES BAY BRIDGE
CHUTES RIVER
CUMBERLAND COUNTY
NAPLES

ARCH PILE PLAN

SHEET NUMBER
73
OF 160

Filename: ...\mslo\074_Arch SealPlan.dgn Division: BRIDGE Username: dana.damren Date:7/26/2010

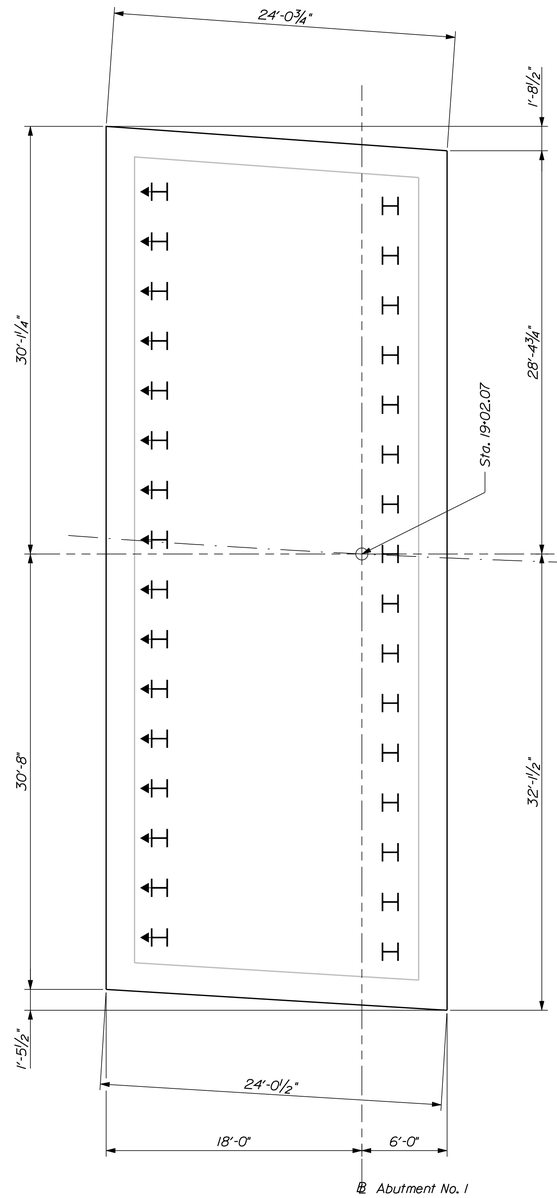

ABUTMENT NO. 1 SEAL PLAN

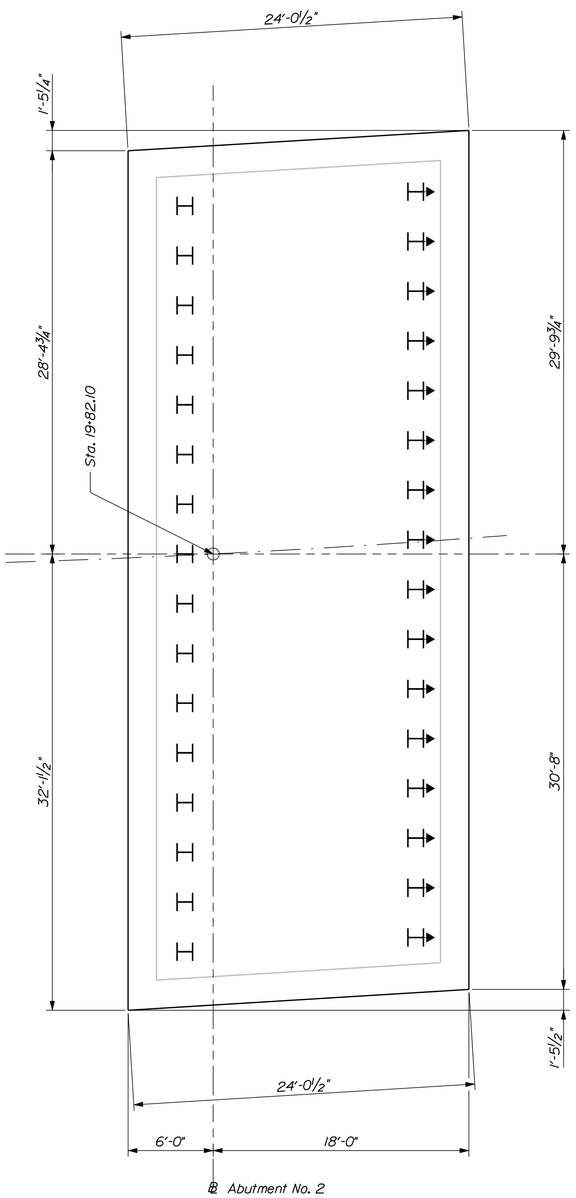

ABUTMENT NO. 2 SEAL PLAN

SEAL COFFERDAM NOTES

1. When sheet piling is used for seal cofferdams, appropriate rolled corners shall be used, and the inside face of the sheet piling shall be at or outside of the seal concrete dimensions shown.

2. The seal concrete placement dimensions shown represent the minimum seal size necessary to meet design requirements and are not based on the use of any particular sheet pile section.

3. The horizontal pay limit for seal concrete will be to the dimensions shown on the plans. No additional payment will be made for concrete placed outside these limits.

4. The depth of the seal is set for a water elevation of 271.0. If the water elevation at the time of construction is higher, the depth of the seal shall be adjusted.

STATE OF MAINE
DEPARTMENT OF TRANSPORTATION

BH-A106(000)

PIN **11060.00**

BRIDGE NO. 2047 BRIDGE PLANS

PROJ. MANAGER	J. Wentworth	
DESIGN-DETAILED	J. Folsom	July 2010
CHECKED-REVIEWED	-----	-----
DESIGN2-DETAILED2	-----	-----
DESIGN3-DETAILED3	-----	-----
REVISIONS 1	-----	-----
REVISIONS 2	-----	-----
REVISIONS 3	-----	-----
REVISIONS 4	-----	-----
FIELD CHANGES	-----	-----

BY DATE

SIGNATURE

P.E. NUMBER

DATE

NAPLES BAY BRIDGE
CHUTES RIVER
NAPLES CUMBERLAND COUNTY

ARCH SEAL PLAN

SHEET NUMBER

74

OF 160

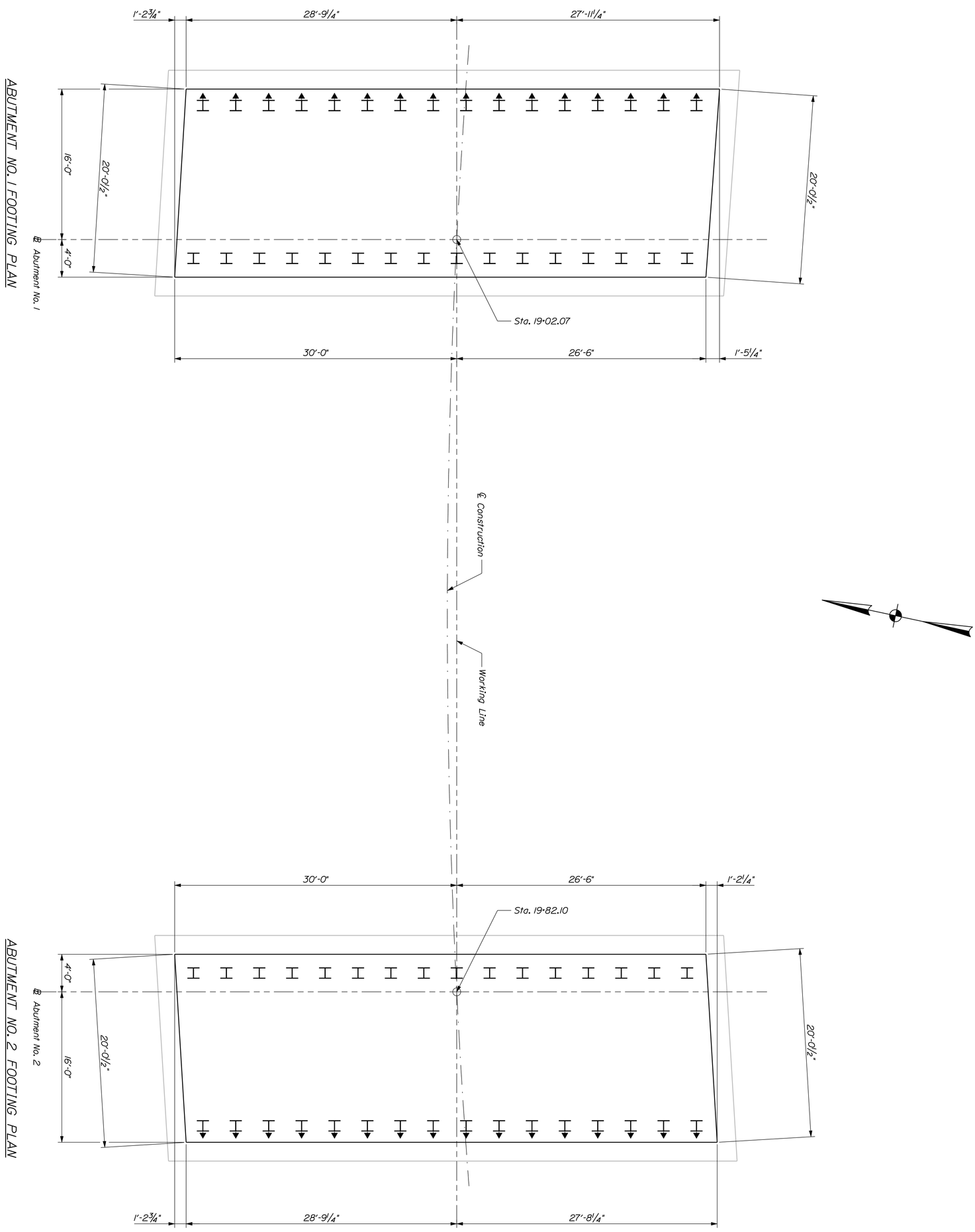

SHEET NUMBER 75 OF 160

NAPLES BAY BRIDGE
CHUTES RIVER
NAPLES CUMBERLAND COUNTY

ARCH FOOTING PLAN

		BY	DATE
PROJ. MANAGER	J. Wentworth		
DESIGN-DETAILED	J. Folsom	D. Damren	July 2010
CHECKED-REVIEWED	_____	_____	_____
DESIGN2-DETAILED2	_____	__	_____
DESIGN3-DETAILED3	_____	_____	_____
REVISIONS 1	_____		_____
REVISIONS 2	_____		_____
REVISIONS 3	_____		_____
REVISIONS 4	_____		_____
FIELD CHANGES	_____		_____

SIGNATURE

P.E. NUMBER

DATE

STATE OF MAINE
DEPARTMENT OF TRANSPORTATION

BH-A106(000)

BRIDGE NO. 2047 PIN 11060.00 BRIDGE PLANS

Filename: ...\076_Arch Abutment Plan.dgn Division: BRIDGE Username: dona.domren Date:7/20/2010

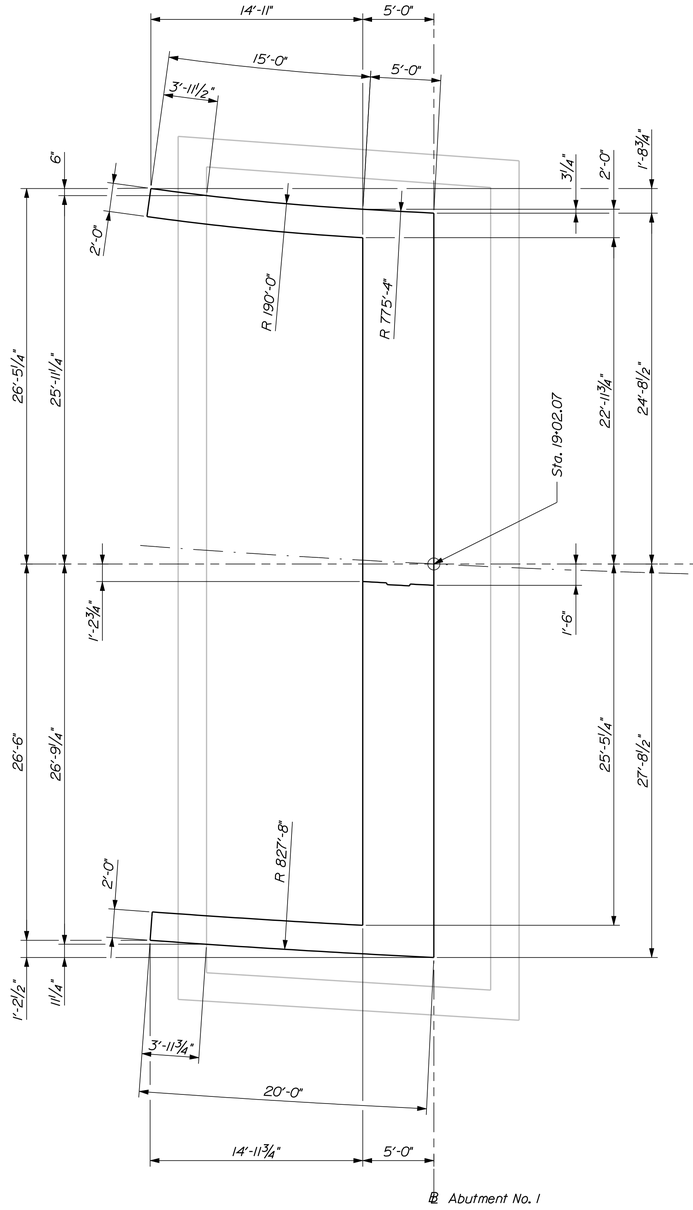

ABUTMENT NO. 1 PLAN

ABUTMENT NOTES

1. Structural Earth Excavation. Abutments and Retaining Walls, required more than 12 inches below the bottom of the structure, will be paid for in accordance with Standard Specifications Section 206. Structural Excavation.

2. Reinforcing steel shall have a minimum concrete cover of 2 inches in the walls and 3 inches in the footings unless otherwise noted.

3. Place 4-in. diameter drains in the breastwall and wingwalls at 10-ft maximum spacing. The exact location will be determined by the Resident.

4. Cover joints where waterstops are not required in accordance with Standard Details Section 502.

5. Construct French Drains behind the abutments and wingwalls in accordance with Standard Specifications Section 512. French Drains.

6. Abutments, wingwalls and their footings shall be backfilled with Granular Borrow. Pay limits will be the structural excavation limits in cut areas and a vertical plane located 10 feet behind the walls in fill areas.

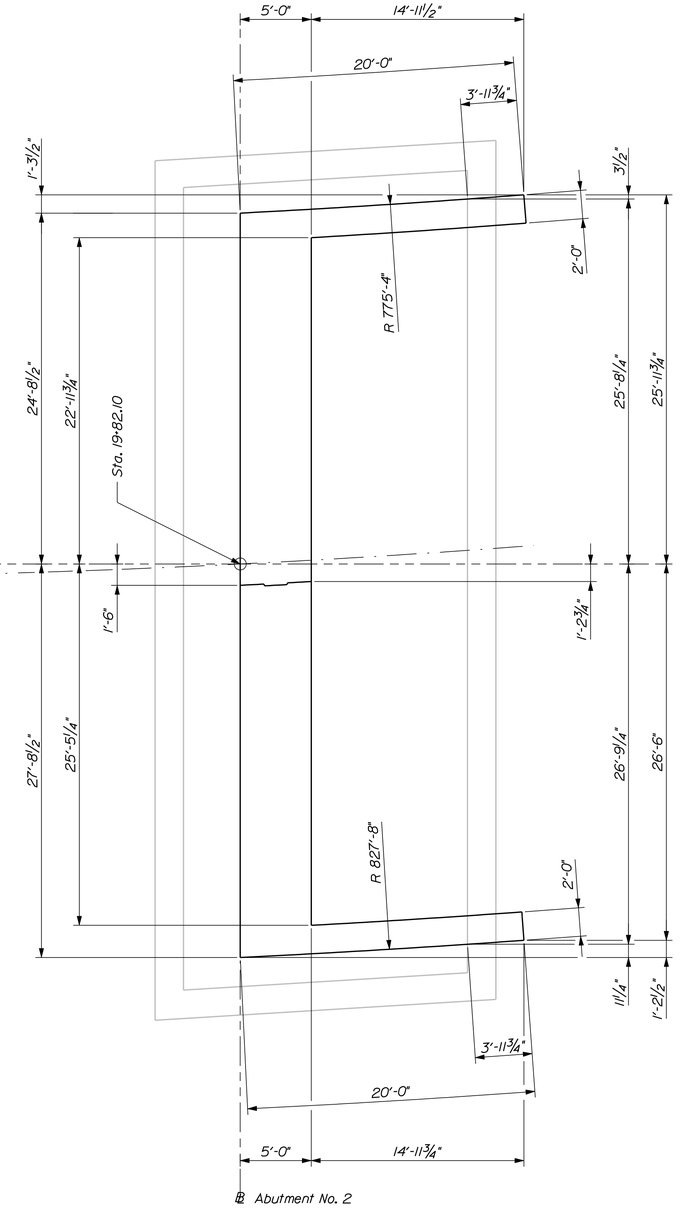

ABUTMENT NO. 2 PLAN

STATE OF MAINE
DEPARTMENT OF TRANSPORTATION

BH-A106(000)

PIN 11060.00

BRIDGE NO. 2047 BRIDGE PLANS

PROJ. MANAGER	J. Wentworth	BY	DATE
DESIGN-DETAILED	J. Folsom	D. Domren	July 2010
CHECKED-REVIEWED	-----	-----	-----
DESIGN2-DETAILED2	-----	--	-----
DESIGN3-DETAILED3	-----	-----	-----
REVISIONS 1	-----	-----	-----
REVISIONS 2	-----	-----	-----
REVISIONS 3	-----	-----	-----
REVISIONS 4	-----	-----	-----
FIELD CHANGES	-----	-----	-----

SIGNATURE

P.E. NUMBER

DATE

NAPLES BAY BRIDGE
CHUTES RIVER
NAPLES CUMBERLAND COUNTY

ARCH ABUTMENT PLAN

SHEET NUMBER

76

OF 160

Filename: ...\077_Arch Abut. No. 1_Elevations.dgn Division: BRIDGE Username: dana.damren Date:7/20/2010

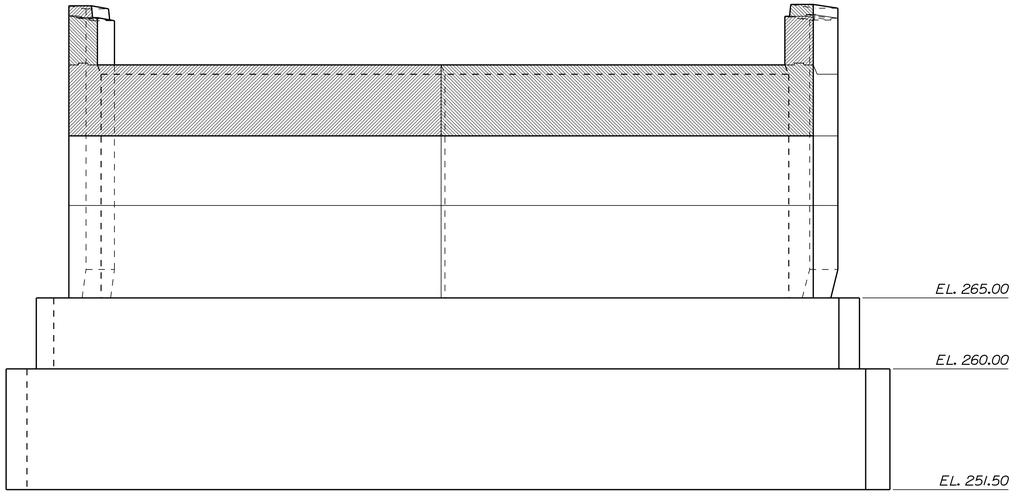

ABUTMENT NO. 1 ELEVATION

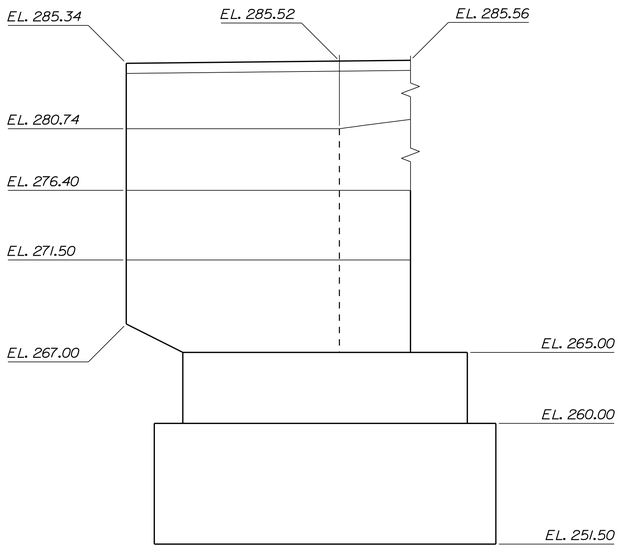

NORTHEAST WINGWALL ELEVATION

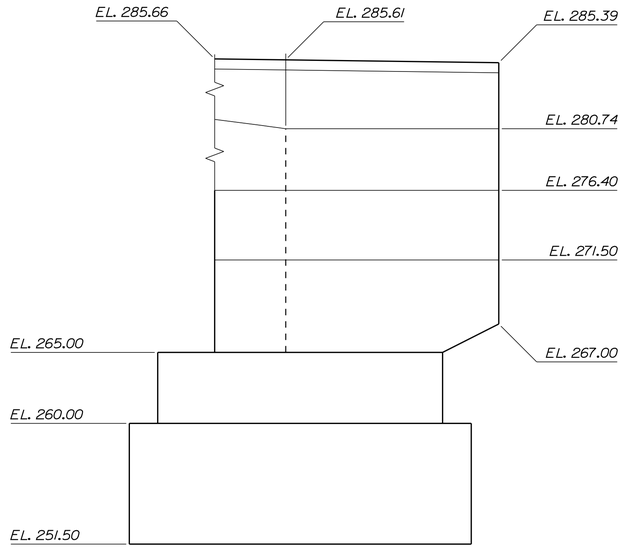

SOUTHEAST WINGWALL ELEVATION

STATE OF MAINE
DEPARTMENT OF TRANSPORTATION

BH-A106(000)

PIN 11060.00

BRIDGE NO. 2047

BRIDGE PLANS

PROJ. MANAGER	J. Wentworth	BY	DATE
DESIGN-DETAILED	J. Folsom	D. Damren	July 2010
CHECKED-REVIEWED	------	------	------
DESIGN2-DETAILED2	------	--	------
DESIGN3-DETAILED3	------	----------	------
REVISIONS 1	------	------	------
REVISIONS 2	------	------	------
REVISIONS 3	------	------	------
REVISIONS 4	------	------	------
FIELD CHANGES	------	------	------

SIGNATURE

P.E. NUMBER

DATE

NAPLES BAY BRIDGE
CHUTES RIVER
NAPLES CUMBERLAND COUNTY

ARCH ABUT. NO. 1 ELEVS.

SHEET NUMBER

77

OF 160

Filename: ...\078_Arch Abut. No. 2_Elevations.dgn Division: BRIDGE Username: dona.domren Date:7/20/2010

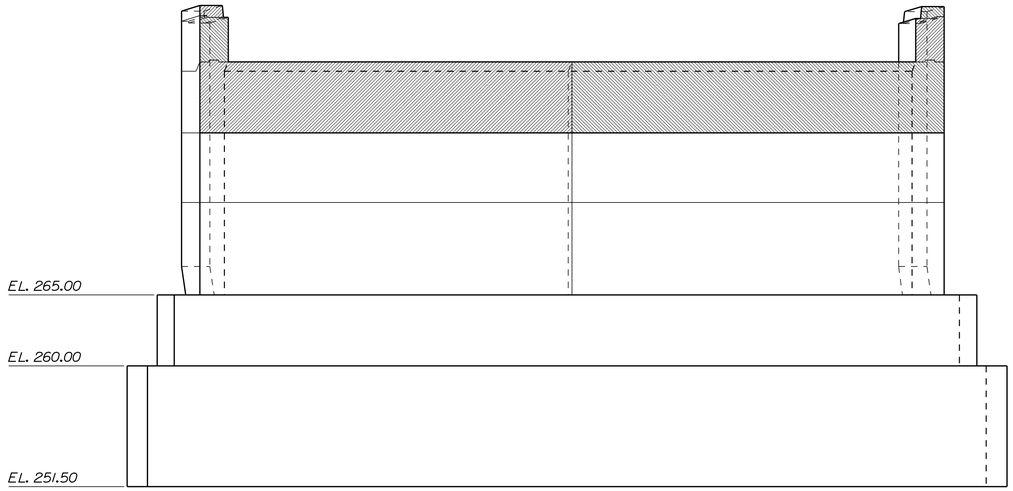

ABUTMENT NO. 2 ELEVATION

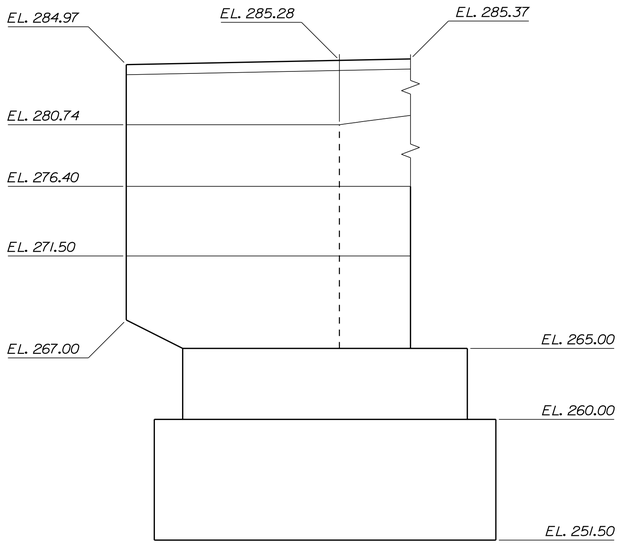

SOUTHWEST WINGWALL ELEVATION

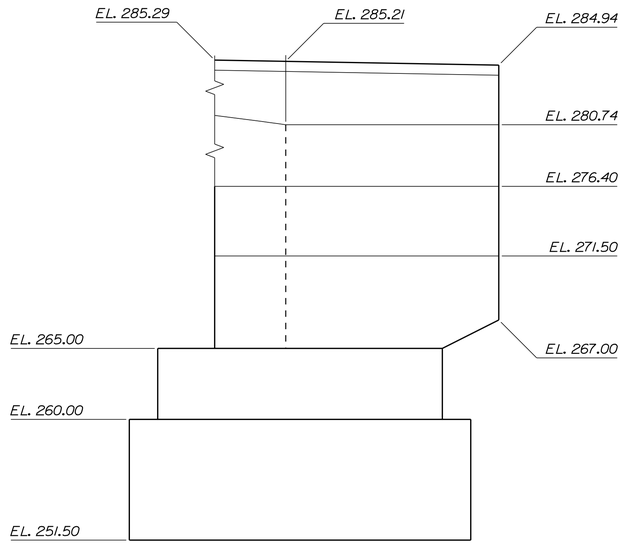

NORTHWEST WINGWALL ELEVATION

STATE OF MAINE
DEPARTMENT OF TRANSPORTATION

BH-A106(000)

PIN 11060.00

BRIDGE NO. 2047

BRIDGE PLANS

PROJ. MANAGER	J. Wentworth	BY	DATE
DESIGN-DETAILED	J. Folsom	D. Domren	July 2010
CHECKED-REVIEWED	------	------	------
DESIGN2-DETAILED2	------	--	------
DESIGN3-DETAILED3	------	----------	------
REVISIONS 1	------	------	------
REVISIONS 2	------	------	------
REVISIONS 3	------	------	------
REVISIONS 4	------	------	------
FIELD CHANGES	------	------	------

SIGNATURE

P.E. NUMBER

DATE

NAPLES BAY BRIDGE
CHUTES RIVER
NAPLES CUMBERLAND COUNTY

ARCH ABUT. NO. 2 ELEVS

SHEET NUMBER

78

OF 160

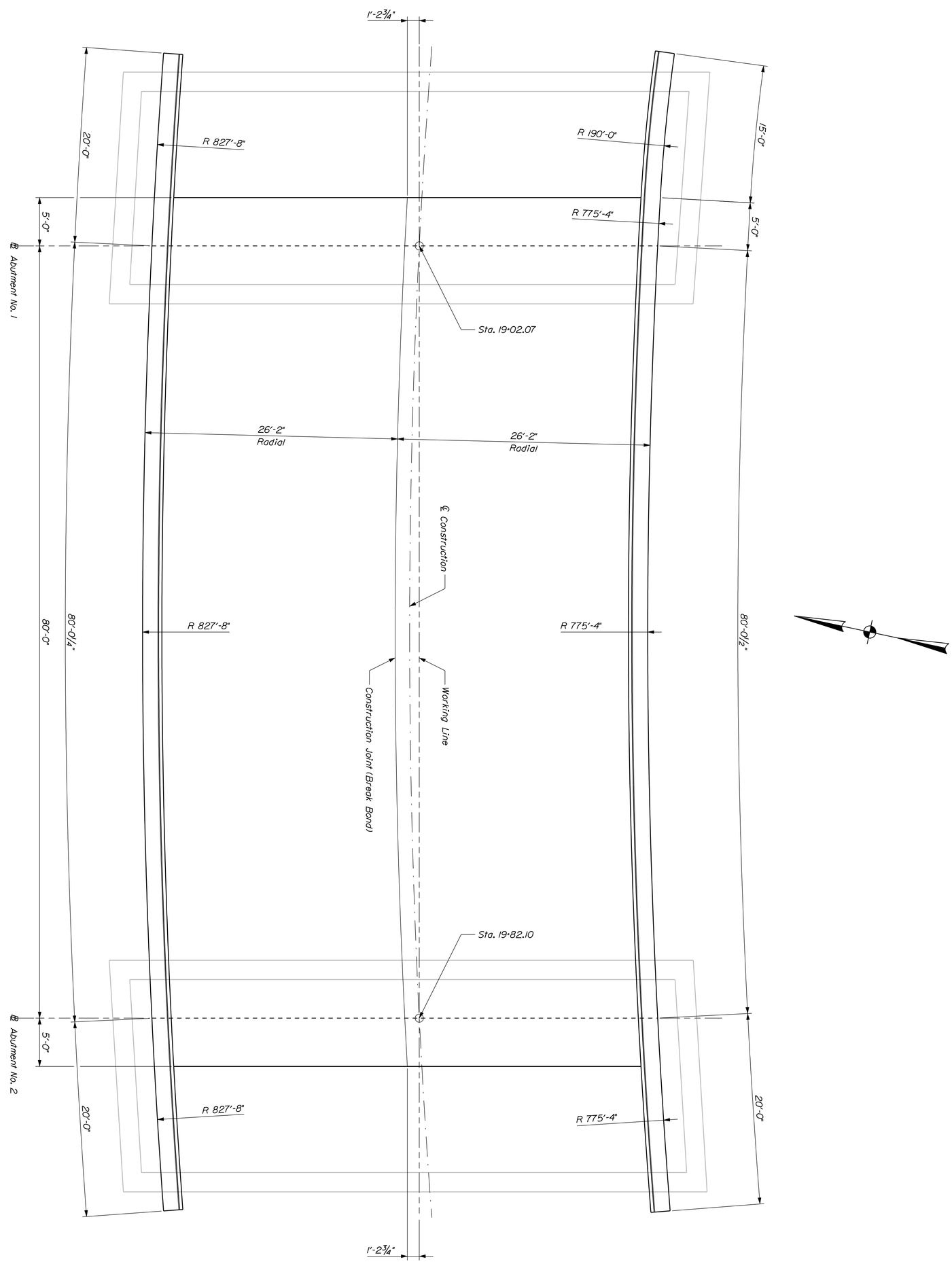

ARCH PLAN

PROJ. MANAGER	J. Wentworth	BY	DATE
DESIGN-DETAILED	J. Folsom	D. Damren	July 2010
CHECKED-REVIEWED	_____	_____	_____
DESIGN2-DETAILED2	_____	__	_____
DESIGN3-DETAILED3	_____	_____	_____
REVISIONS 1	_____		_____
REVISIONS 2	_____		_____
REVISIONS 3	_____		_____
REVISIONS 4	_____		_____
FIELD CHANGES	_____		_____

SIGNATURE

P.E. NUMBER

DATE

SHEET NUMBER 79 OF 160

NAPLES BAY BRIDGE
CHUTES RIVER
NAPLES CUMBERLAND COUNTY

ARCH PLAN

STATE OF MAINE
DEPARTMENT OF TRANSPORTATION

BH-A106(000)

PIN 11060.00

BRIDGE NO. 2047

BRIDGE PLANS

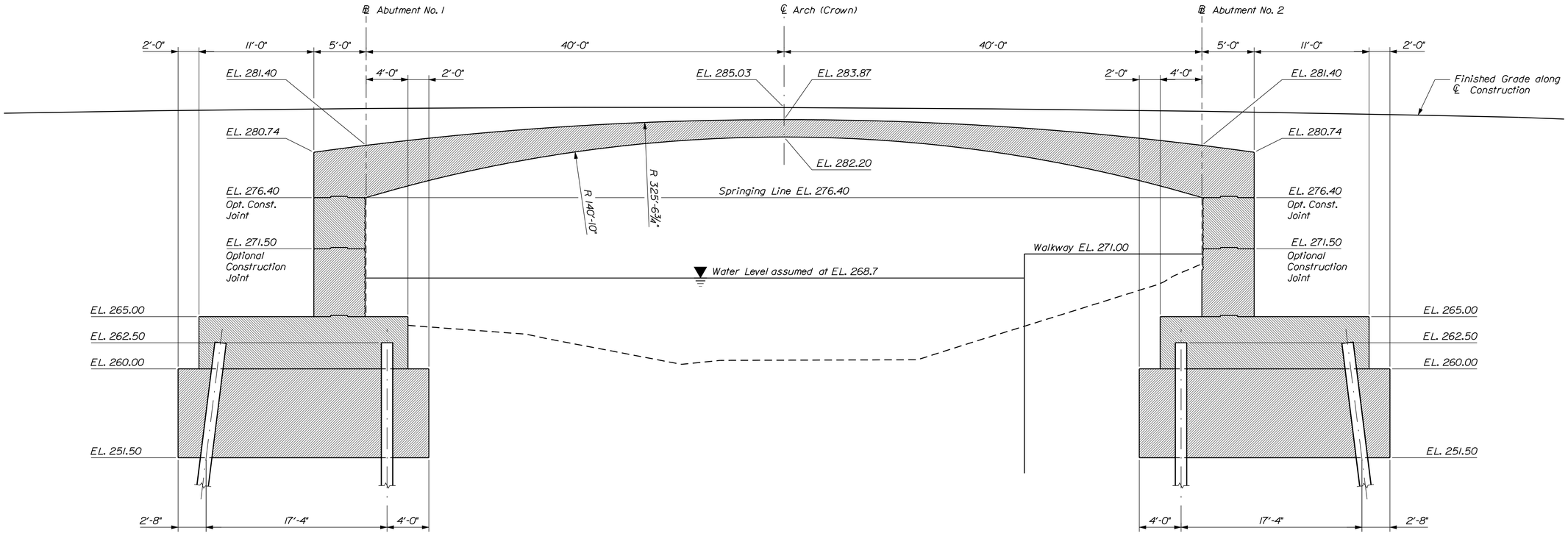

TYPICAL ARCH SECTION

Filename: ...\080_Arch Longitudinal Section.dgn Division: BRIDGE Username: dana.damren Date:7/20/2010

STATE OF MAINE
DEPARTMENT OF TRANSPORTATION

BH-A106(000)

PIN 11060.00

BRIDGE NO. 2047

BRIDGE PLANS

PROJ. MANAGER	J. Wentworth	BY	DATE	
DESIGN-DETAILED	J. Folsom	D. Damren	July 2010	
CHECKED-REVIEWED	-----	-----	-----	SIGNATURE
DESIGN2-DETAILED2	-----	-----	-----	
DESIGN3-DETAILED3	-----	-----	-----	P.E. NUMBER
REVISIONS 1	-----	-----	-----	
REVISIONS 2	-----	-----	-----	DATE
REVISIONS 3	-----	-----	-----	
REVISIONS 4	-----	-----	-----	
FIELD CHANGES	-----	-----	-----	

NAPLES BAY BRIDGE
CHUTES RIVER
NAPLES CUMBERLAND COUNTY

ARCH LONGITUDINAL SECTION

SHEET NUMBER

80

OF 160

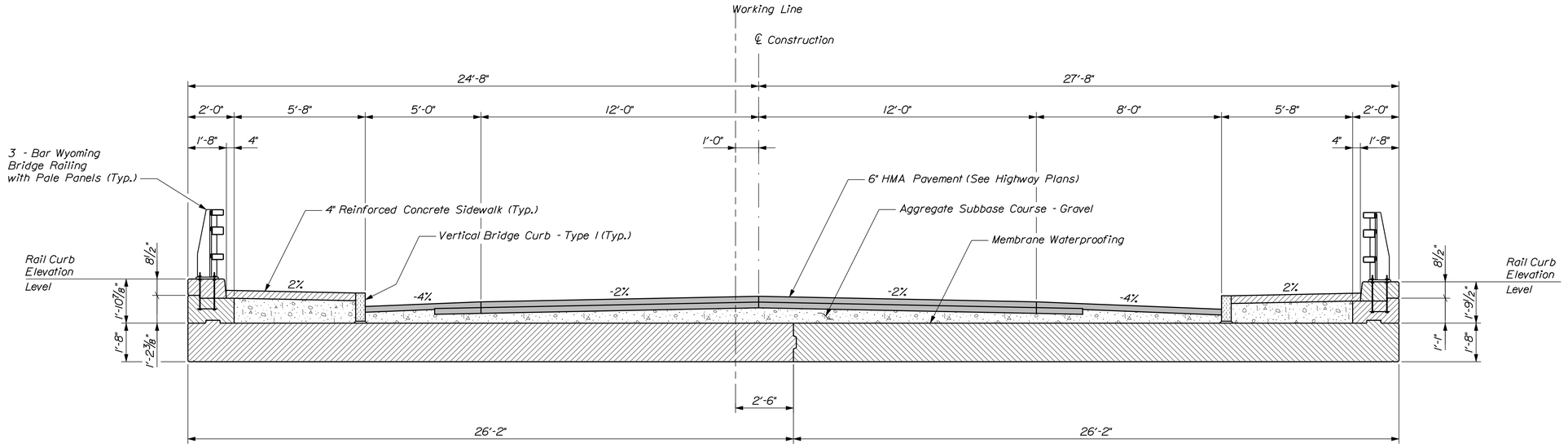

TRANSVERSE SECTION AT ARCH CROWN

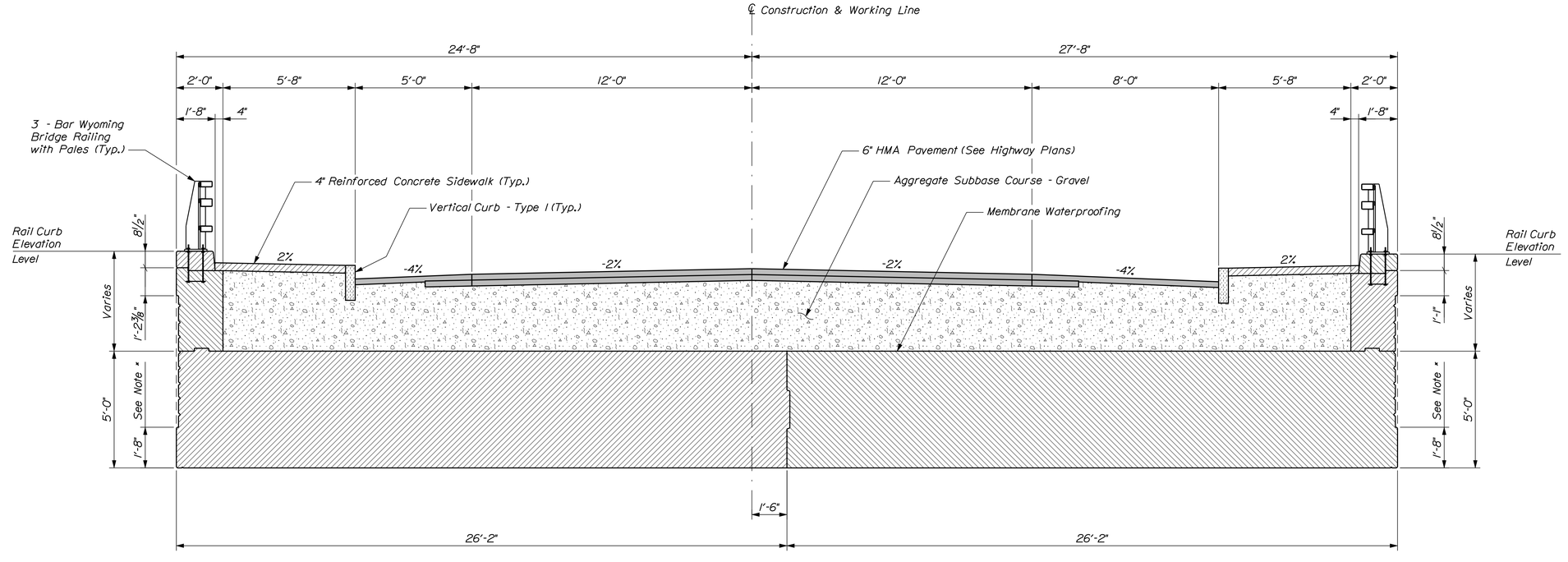

TRANSVERSE SECTION AT FACE OF WALL

Radial Horizontal Dimensions Shown

* 1'-8" Dimension measured normal to bottom of Arch

STATE OF MAINE
DEPARTMENT OF TRANSPORTATION

BH-A106(000)

PIN 11060.00

BRIDGE NO. 2047

BRIDGE PLANS

	BY	DATE
PROJ. MANAGER	J. Wentworth	
DESIGN-DETAILED	D. Domren	July 2010
CHECKED-REVIEWED	J. Folsom	-----
DESIGN2-DETAILED2	-----	-----
DESIGN3-DETAILED3	-----	-----
REVISIONS 1	-----	-----
REVISIONS 2	-----	-----
REVISIONS 3	-----	-----
REVISIONS 4	-----	-----
FIELD CHANGES	-----	-----

SIGNATURE

P.E. NUMBER

DATE

NAPLES BAY BRIDGE
CHUTES RIVER
NAPLES CUMBERLAND COUNTY

ARCH TRANSVERSE SECTIONS

SHEET NUMBER

81

OF 160

Filename: ...\081_Arch Tronsverse Sections.dgn Division: BRIDGE Username: dona.domren Date:7/20/2010

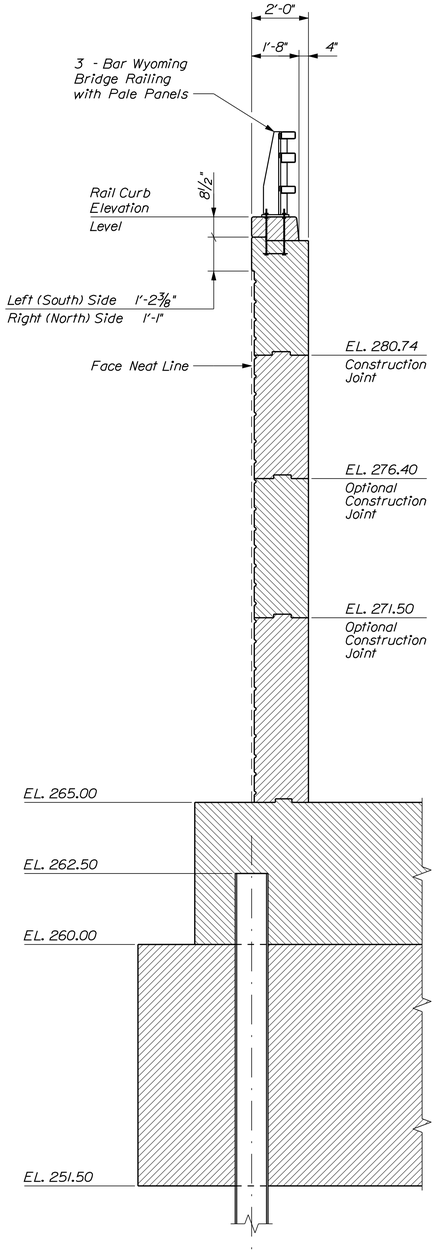

TYPICAL WINGWALL SECTION

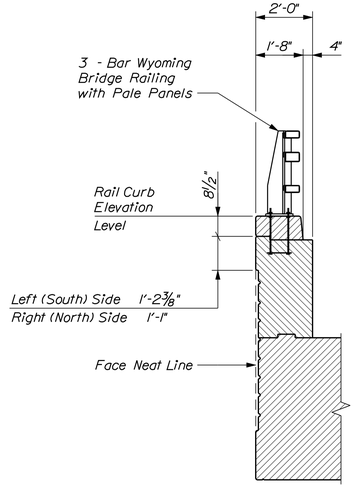

TYPICAL SPANDREL WALL SECTION

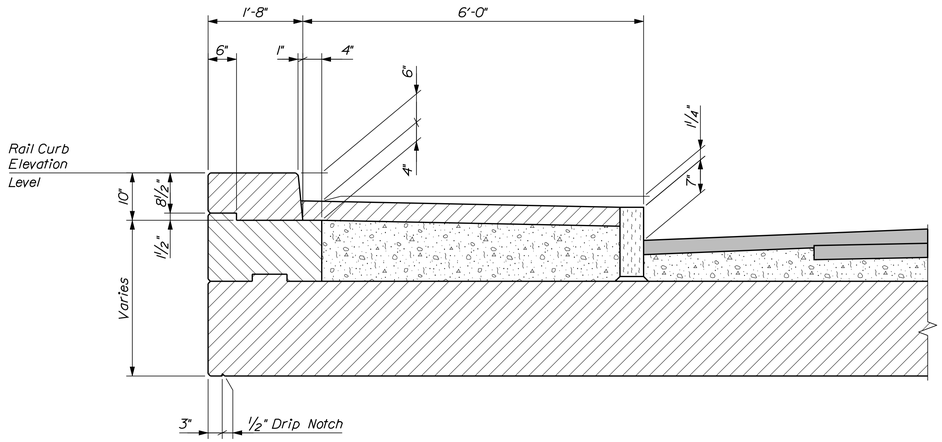

RAIL CURB & SIDEWALK DETAIL

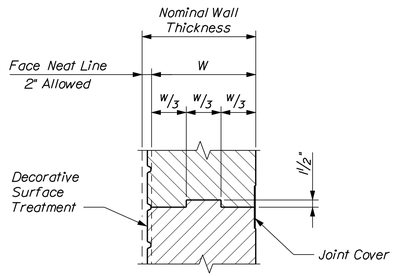

WALL CONSTRUCTION JOINT DETAIL

STATE OF MAINE
DEPARTMENT OF TRANSPORTATION

BH-A106(000)

PIN 11060.00

BRIDGE NO. 2047

BRIDGE PLANS

	BY	DATE
PROJ. MANAGER	J. Wentworth	
DESIGN-DETAILED	J. Folsom	July 2010
CHECKED-REVIEWED	D. Domren	
DESIGN2-DETAILED2	--	
DESIGN3-DETAILED3		
REVISIONS 1		
REVISIONS 2		
REVISIONS 3		
REVISIONS 4		
FIELD CHANGES		

SIGNATURE

P.E. NUMBER

DATE

NAPLES BAY BRIDGE
CHUTES RIVER
CUMBERLAND COUNTY
NAPLES

ARCH DETAILS

SHEET NUMBER

82

OF 160

Filename: ...\mslo\082_Arch Details.dgn Division: BRIDGE Username: dona.domren Date:7/20/2010

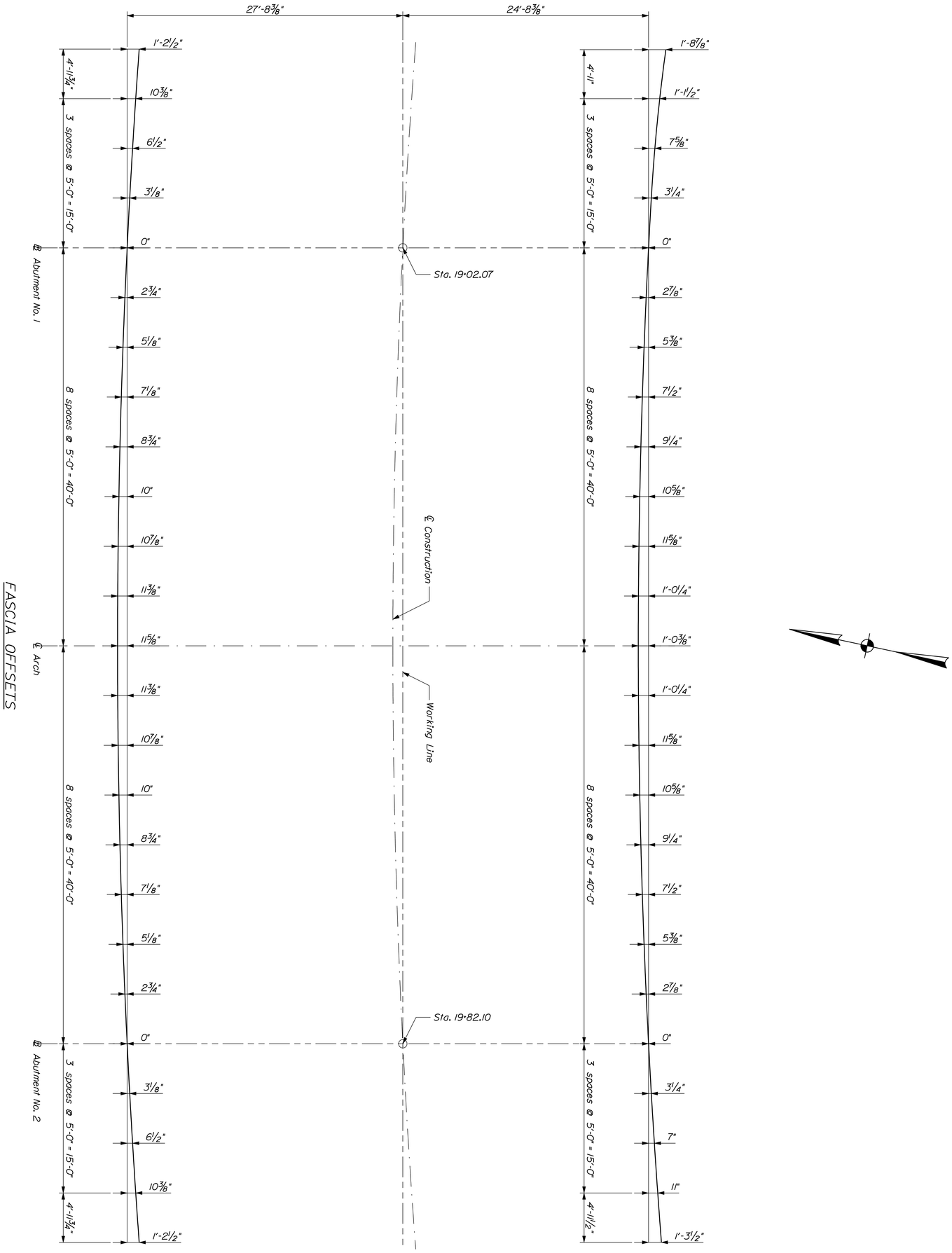

FASCIA OFFSETS

NAPLES BAY BRIDGE
CHUTES RIVER
NAPLES CUMBERLAND COUNTY

ARCH HORIZONTAL GEOMETRY

PROJ. MANAGER	J. Wentworth	BY	DATE
DESIGN-DETAILED	J. Folsom	D. Damren	July 2010
CHECKED-REVIEWED	_____	_____	_____
DESIGN2-DETAILED2	_____	__	_____
DESIGN3-DETAILED3	_____	_____	_____
REVISIONS 1	_____		_____
REVISIONS 2	_____		_____
REVISIONS 3	_____		_____
REVISIONS 4	_____		_____
FIELD CHANGES	_____		_____

SIGNATURE

P.E. NUMBER

DATE

STATE OF MAINE
DEPARTMENT OF TRANSPORTATION

BH-A106(000)

PIN 11060.00

BRIDGE NO. 2047

BRIDGE PLANS

SHEET NUMBER 83 OF 160

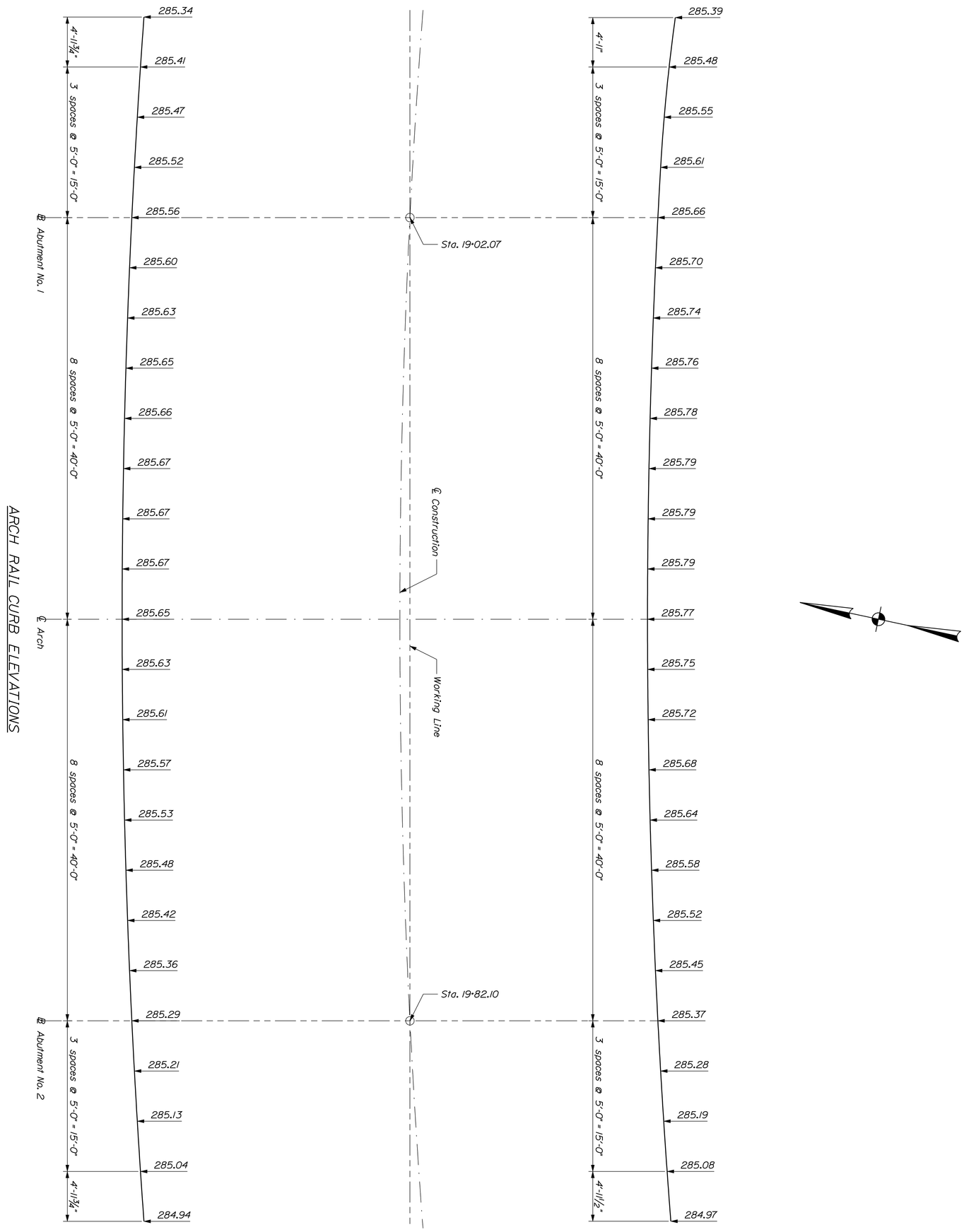

SHEET NUMBER 84 OF 160

NAPLES BAY BRIDGE
CHUTES RIVER
NAPLES CUMBERLAND COUNTY

ARCH RAIL CURB ELEV'S

		BY	DATE
PROJ. MANAGER	J. Wentworth		
DESIGN-DETAILED	J. Folsom	D. Damren	July 2010
CHECKED-REVIEWED	_____	_____	_____
DESIGN2-DETAILED2	_____	__	_____
DESIGN3-DETAILED3	_____	_____	_____
REVISIONS 1	_____		_____
REVISIONS 2	_____		_____
REVISIONS 3	_____		_____
REVISIONS 4	_____		_____
FIELD CHANGES	_____		_____

SIGNATURE

P.E. NUMBER

DATE

STATE OF MAINE
DEPARTMENT OF TRANSPORTATION

BH-A106(000)

PIN 11060.00

BRIDGE NO. 2047 BRIDGE PLANS

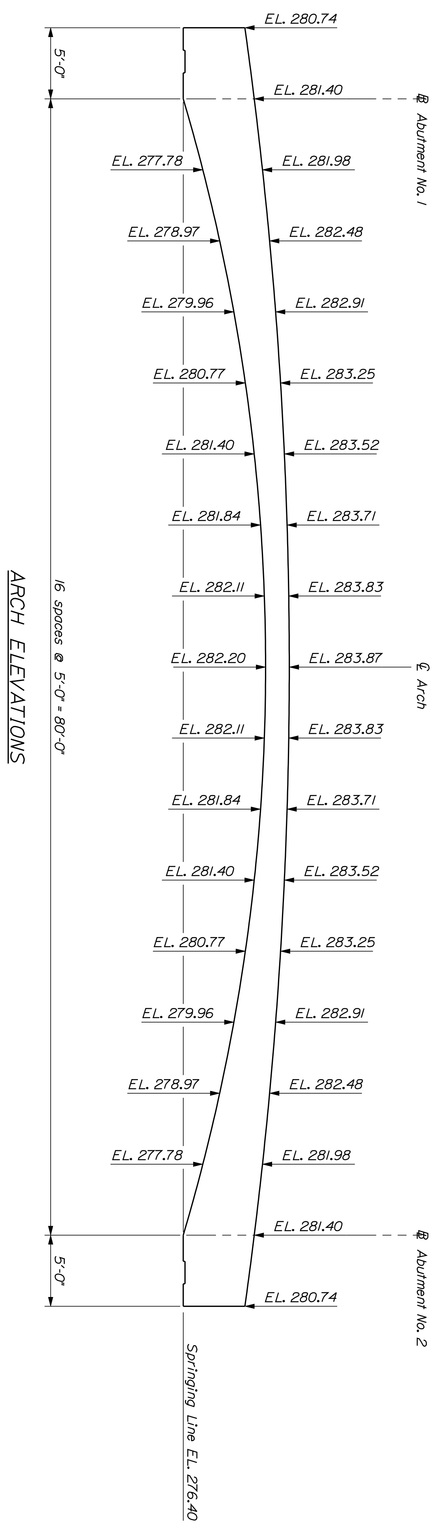

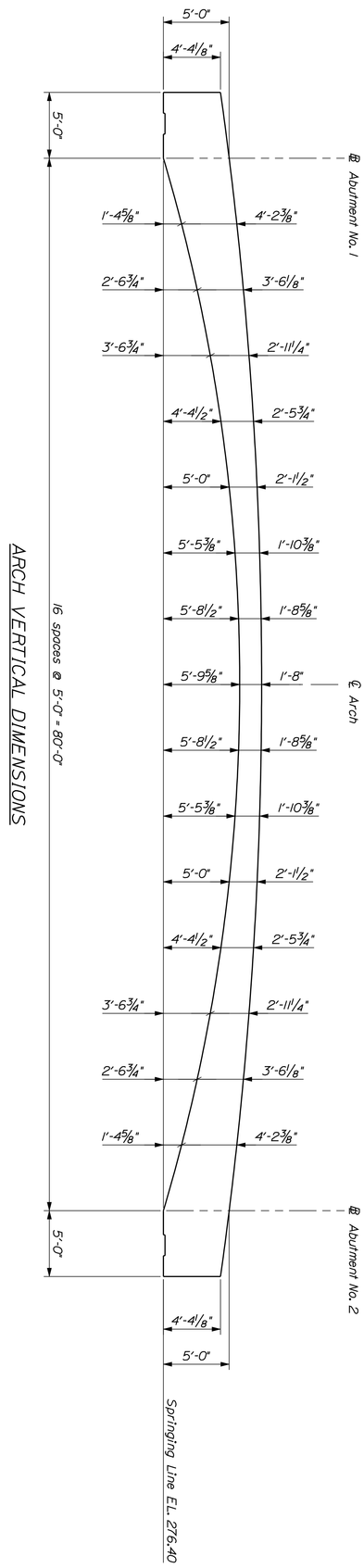

SHEET NUMBER 85 OF 160

NAPLES BAY BRIDGE
CHUTES RIVER
NAPLES CUMBERLAND COUNTY

ARCH VERTICAL GEOMETRY

		BY	DATE
PROJ. MANAGER	J. Wentworth		
DESIGN-DETAILED	J. Folsom	D. Damren	July 2010
CHECKED-REVIEWED	_____	_____	_____
DESIGN2-DETAILED2	_____	__	_____
DESIGN3-DETAILED3	_____	_____	_____
REVISIONS 1	_____		_____
REVISIONS 2	_____		_____
REVISIONS 3	_____		_____
REVISIONS 4	_____		_____
FIELD CHANGES	_____		_____

SIGNATURE

P.E. NUMBER

DATE

STATE OF MAINE
DEPARTMENT OF TRANSPORTATION

BH-A106(000)

BRIDGE NO. 2047 PIN 11060.00 BRIDGE PLANS

ABUTMENT NO. 1 FOOTING REINFORCING PLAN

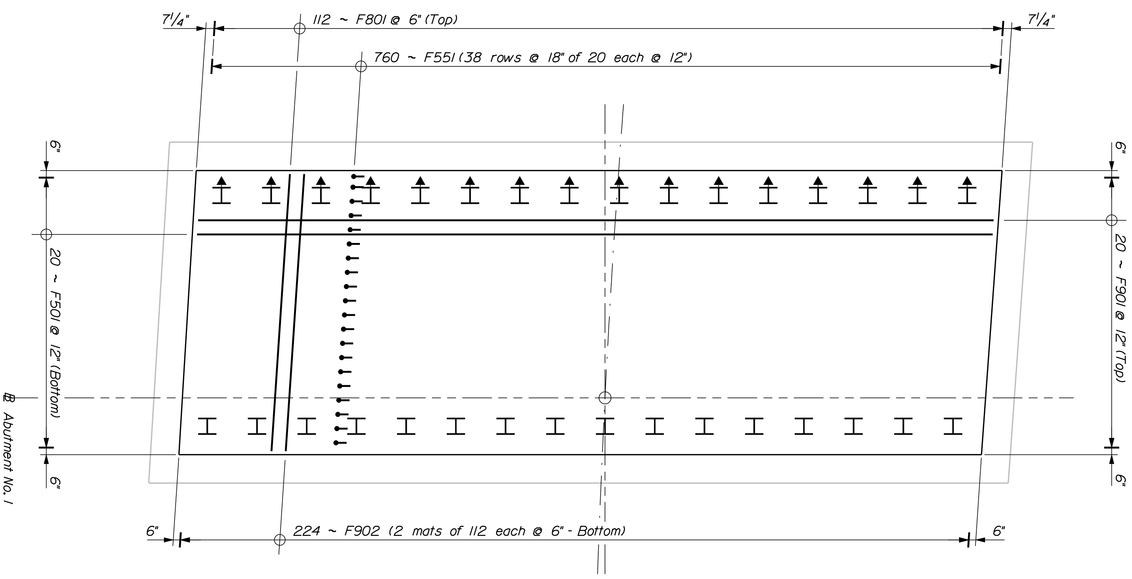

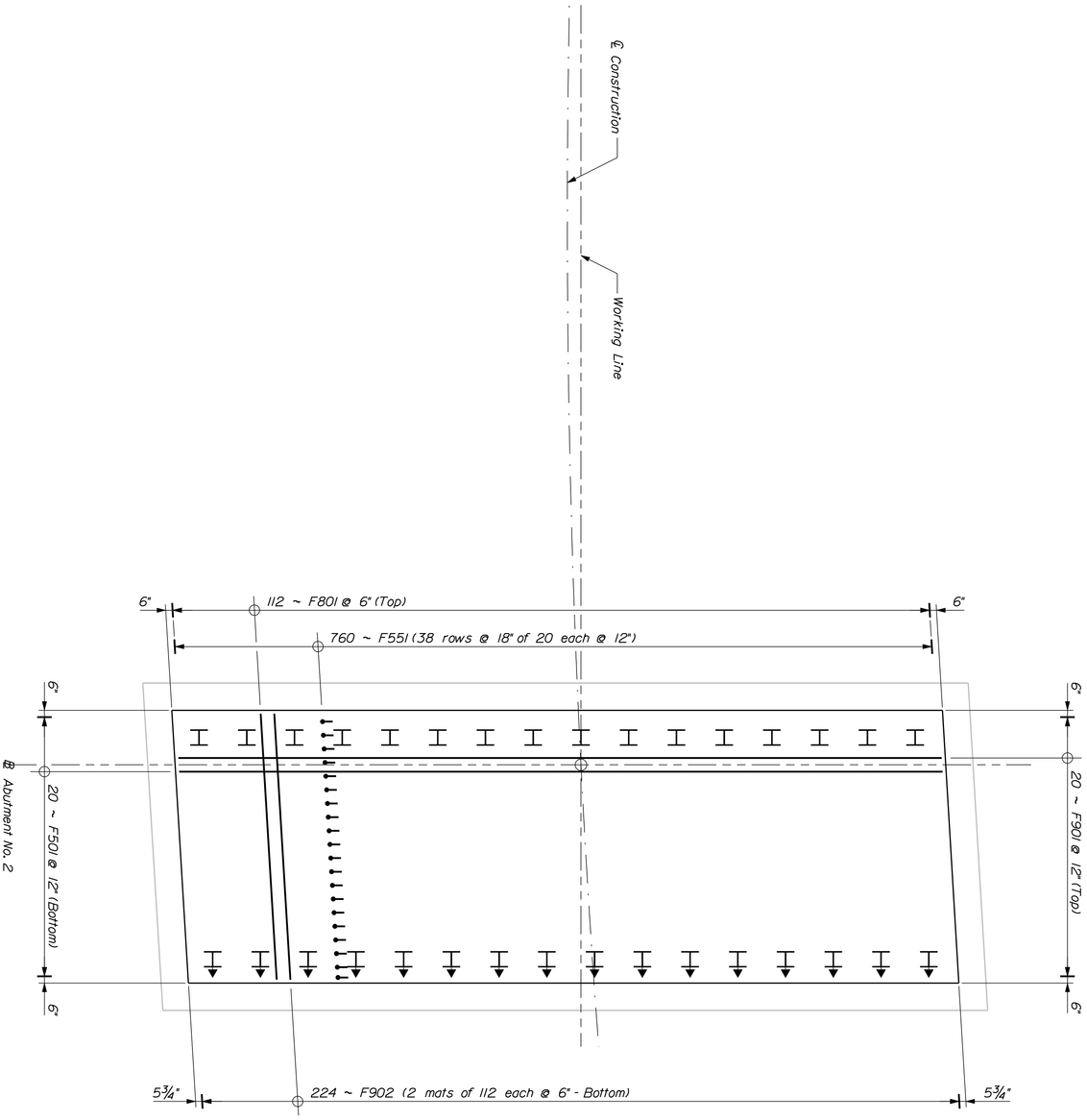

ABUTMENT NO. 2 FOOTING PLAN

SHEET NUMBER 86 OF 160

NAPLES BAY BRIDGE
CHUTES RIVER
NAPLES CUMBERLAND COUNTY

ARCH FOOTING REINF. PLAN

	PROJ. MANAGER	J. Wentworth	BY	DATE
	DESIGN-DETAILED	J. Folsom	D. Damren	July 2010
	CHECKED-REVIEWED	_____	_____	_____
	DESIGN2-DETAILED2	_____	--	_____
	DESIGN3-DETAILED3	_____	_____	_____
	REVISIONS 1	_____		_____
	REVISIONS 2	_____		_____
	REVISIONS 3	_____		_____
	REVISIONS 4	_____		_____
	FIELD CHANGES	_____		_____

SIGNATURE

P.E. NUMBER

DATE

STATE OF MAINE
DEPARTMENT OF TRANSPORTATION

BH-A106(000)

BRIDGE NO. 2047 PIN 11060.00 BRIDGE PLANS

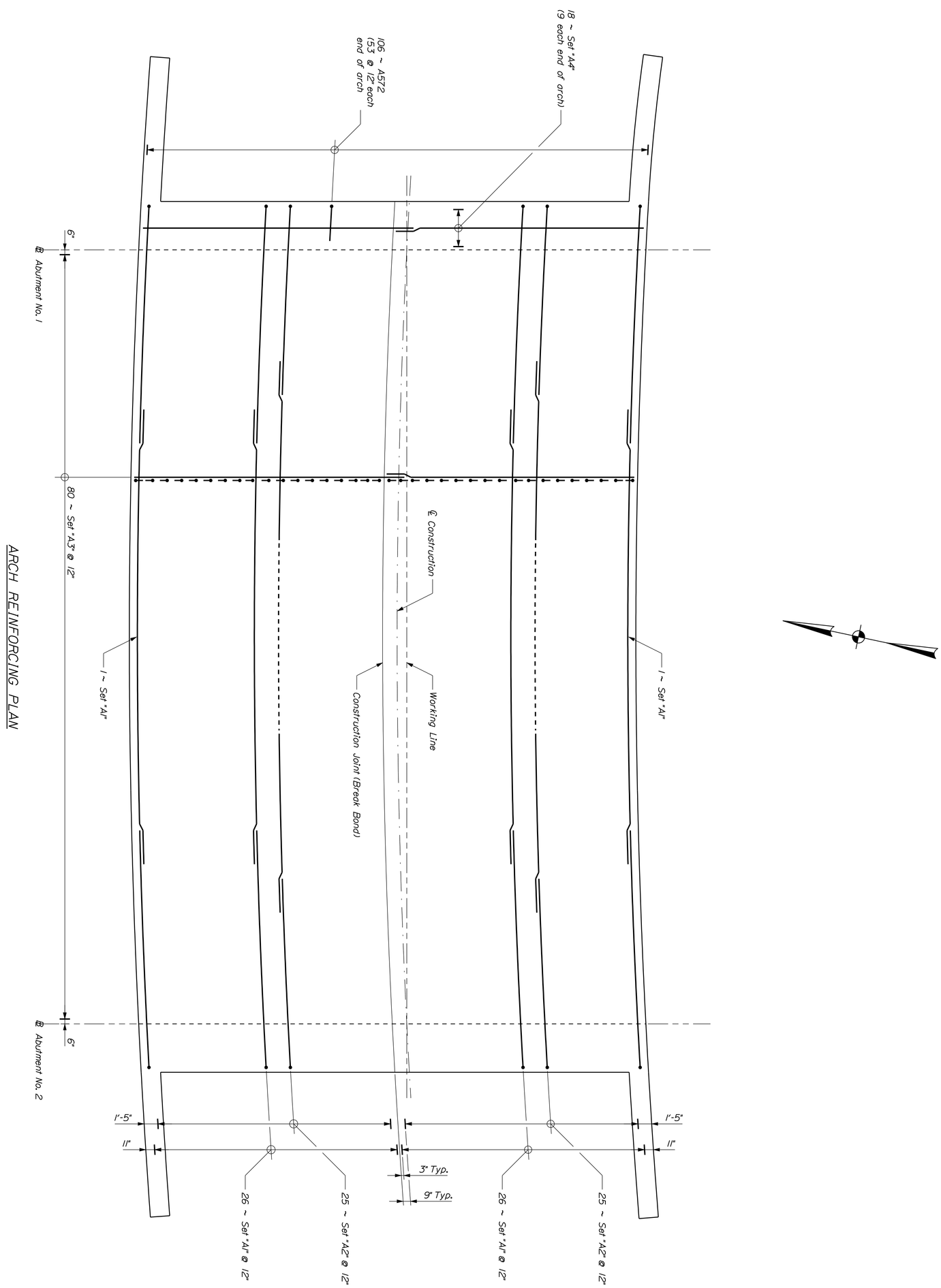

ARCH REINFORCING PLAN

SHEET NUMBER 87 OF 160

NAPLES BAY BRIDGE
CHUTES RIVER
NAPLES CUMBERLAND COUNTY

ARCH REINFORCING PLAN

		BY	DATE
PROJ. MANAGER	J. Wentworth		
DESIGN-DETAILED	J. Folsom	D. Damren	July 2010
CHECKED-REVIEWED	_____	_____	_____
DESIGN2-DETAILED2	_____	__	_____
DESIGN3-DETAILED3	_____	_____	_____
REVISIONS 1	_____		_____
REVISIONS 2	_____		_____
REVISIONS 3	_____		_____
REVISIONS 4	_____		_____
FIELD CHANGES	_____		_____

SIGNATURE

P.E. NUMBER

DATE

STATE OF MAINE
DEPARTMENT OF TRANSPORTATION

BH-A106(000)

PIN 11060.00

BRIDGE NO. 2047

BRIDGE PLANS

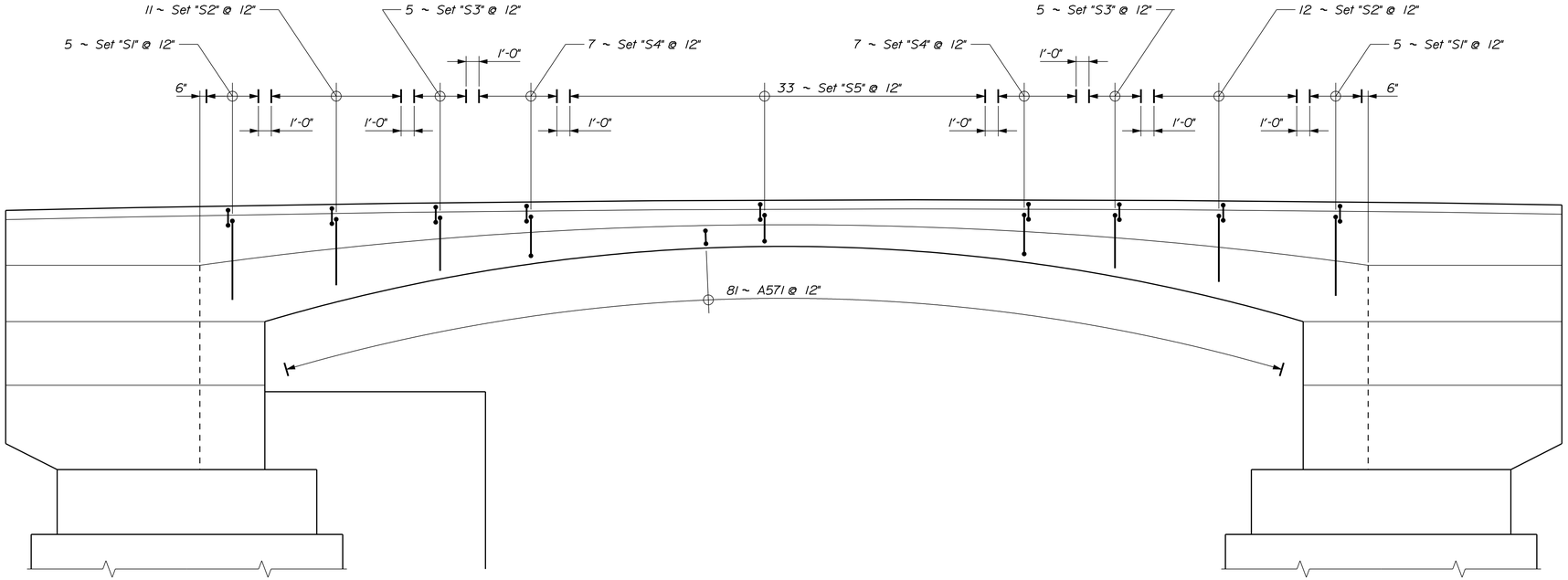

SOUTHERLY ARCH REINFORCING ELEVATION
Vertical Bars

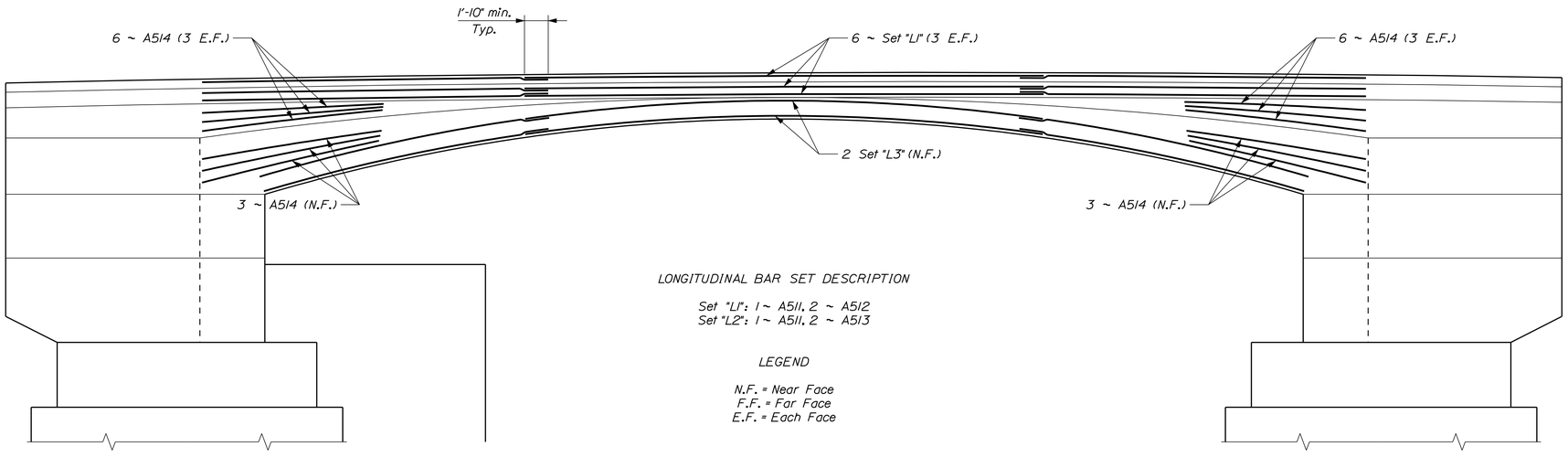

LONGITUDINAL BAR SET DESCRIPTION

Set "L1": 1 ~ A511, 2 ~ A512
Set "L2": 1 ~ A511, 2 ~ A513

LEGEND

N.F. = Near Face
F.F. = Far Face
E.F. = Each Face

SOUTHERLY ARCH REINFORCING ELEVATION
Horizontal Bars

STATE OF MAINE
DEPARTMENT OF TRANSPORTATION

BH-A106(000)

PIN 11060.00

BRIDGE NO. 2047

BRIDGE PLANS

PROJ. MANAGER	J. Wentworth	BY	DATE
DESIGN-DETAILED	J. Folsom	D. Domren	July 2010
CHECKED-REVIEWED	------	------	------
DESIGN2-DETAILED2	------	--	------
DESIGN3-DETAILED3	------	----------	------
REVISIONS 1	------	------	------
REVISIONS 2	------	------	------
REVISIONS 3	------	------	------
REVISIONS 4	------	------	------
FIELD CHANGES	------	------	------

SIGNATURE

P.E. NUMBER

DATE

NAPLES BAY BRIDGE
CHUTES RIVER
NAPLES CUMBERLAND COUNTY

ARCH REINFORCING ELEV.

SHEET NUMBER

88

OF 160

Filename: ...\088_Arch Reinforcing Elevations.dgn Division: BRIDGE Username: dona.domren Date:7/20/2010

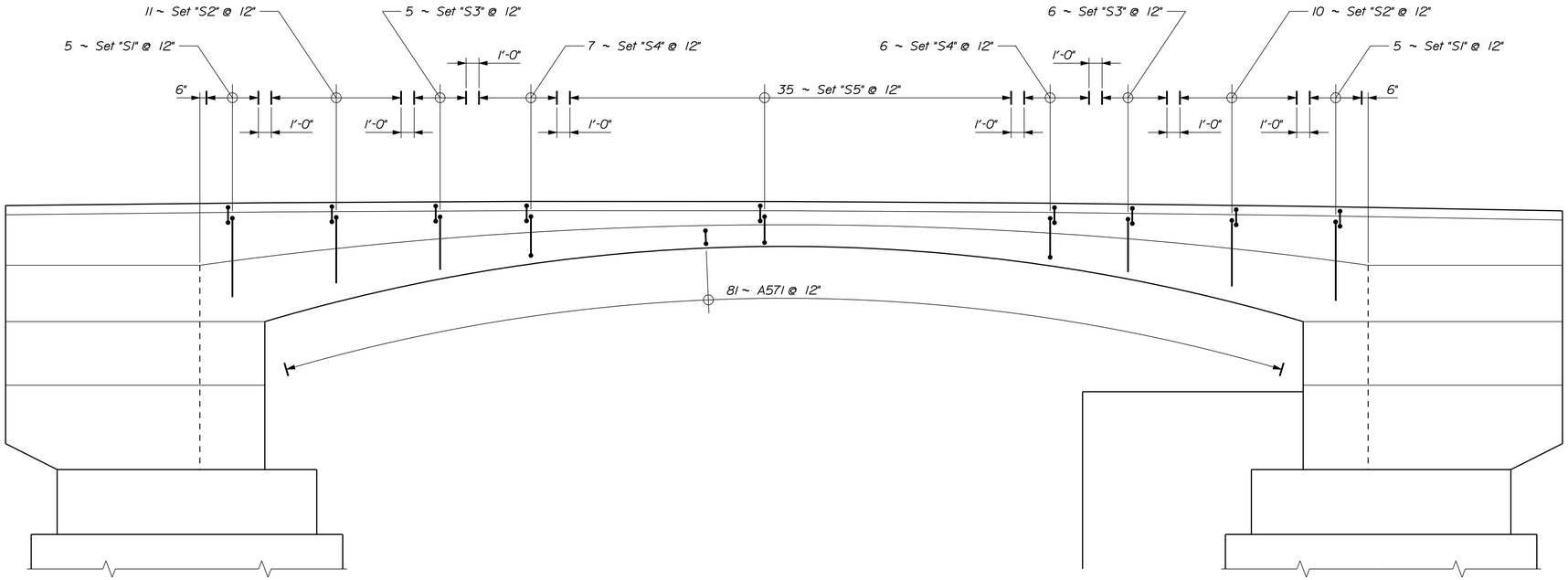

NORTHERLY ARCH REINFORCING ELEVATION
Vertical Bars

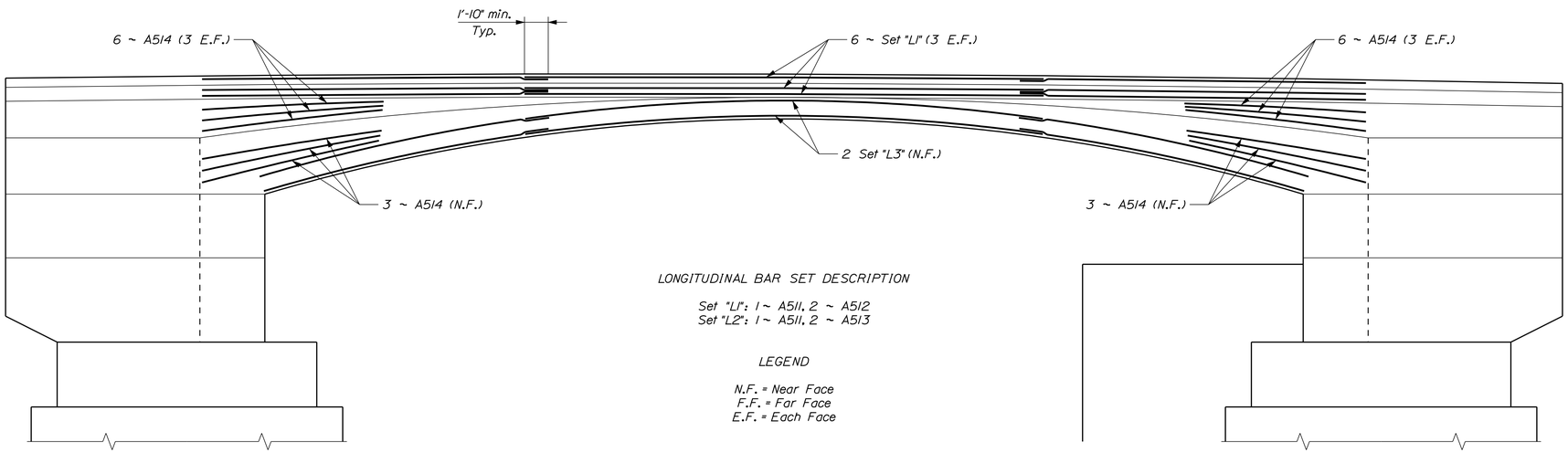

LONGITUDINAL BAR SET DESCRIPTION

Set "L1": 1 ~ A511, 2 ~ A512
Set "L2": 1 ~ A511, 2 ~ A513

LEGEND

N.F. = Near Face
F.F. = Far Face
E.F. = Each Face

NORTHERLY ARCH REINFORCING ELEVATION
Horizontal Bars

STATE OF MAINE
DEPARTMENT OF TRANSPORTATION

BH-A106(000)

PIN 11060.00

BRIDGE NO. 2047

BRIDGE PLANS

PROJ. MANAGER	J. Wentworth	BY	DATE
DESIGN-DETAILED	J. Folsom	D. Domren	July 2010
CHECKED-REVIEWED	------	------	------
DESIGN2-DETAILED2	------	--	------
DESIGN3-DETAILED3	------	----------	------
REVISIONS 1	------	------	------
REVISIONS 2	------	------	------
REVISIONS 3	------	------	------
REVISIONS 4	------	------	------
FIELD CHANGES	------	------	------

SIGNATURE

P.E. NUMBER

DATE

NAPLES BAY BRIDGE
CHUTES RIVER
NAPLES CUMBERLAND COUNTY

ARCH REINFORCING ELEV.

SHEET NUMBER

89

OF 160

Filename: ...\089_Arch Reinforcing Elevations.dgn Division: BRIDGE Username: dona.domren Date:7/20/2010

Filename: ...\090_Arch Footing Reinforcing Section2.dgn Division: BRIDGE Username: dana.damren Date:7/20/2010

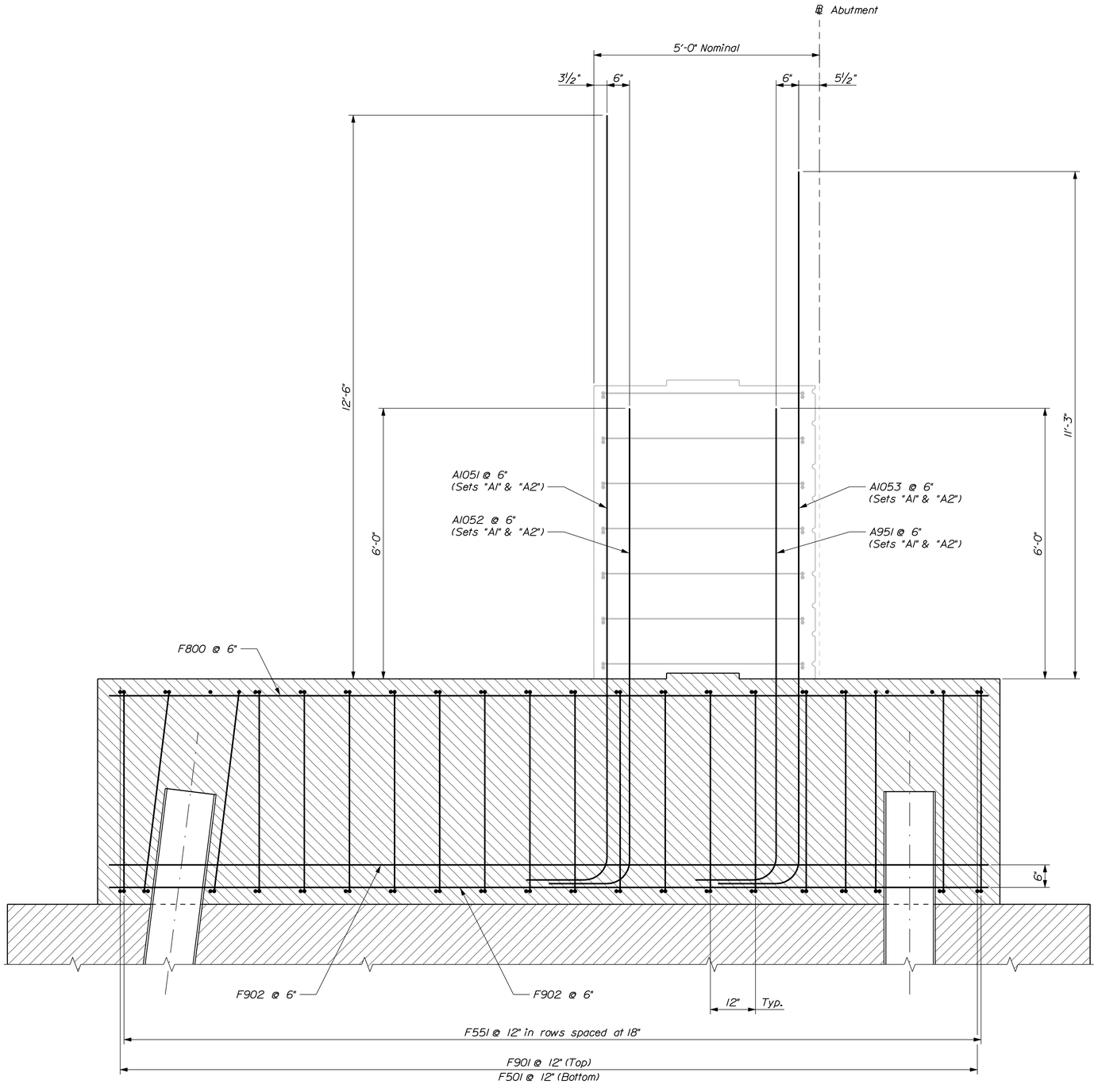

FOOTING REINFORCING SECTION AT ABUTMENT

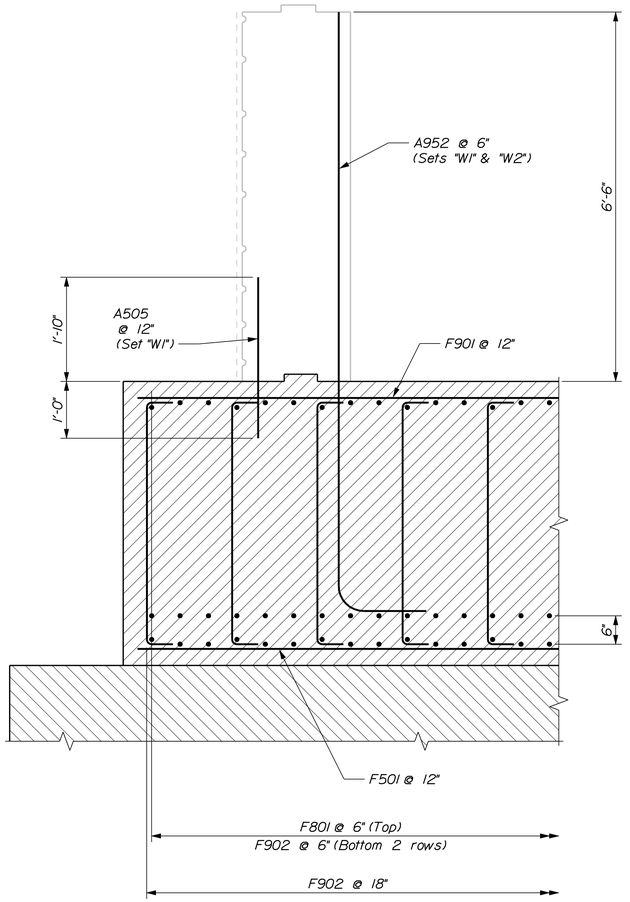

FOOTING REINFORCING SECTION AT WINGWALL

STATE OF MAINE
DEPARTMENT OF TRANSPORTATION

BH-A106(000)

PIN 11060.00

BRIDGE NO. 2047

BRIDGE PLANS

PROJ. MANAGER	J. Wentworth	BY	DATE
DESIGN-DETAILED	J. Folsom	D. Damren	July 2010
CHECKED-REVIEWED	-----	-----	SIGNATURE
DESIGN2-DETAILED2	-----	-----	-----
DESIGN3-DETAILED3	-----	-----	P.E. NUMBER
REVISIONS 1	-----	-----	-----
REVISIONS 2	-----	-----	-----
REVISIONS 3	-----	-----	DATE
REVISIONS 4	-----	-----	-----
FIELD CHANGES	-----	-----	-----

NAPLES BAY BRIDGE
CHUTES RIVER
CUMBERLAND COUNTY
NAPLES

FOOTING REINF. SECTIONS

SHEET NUMBER

90

OF 160

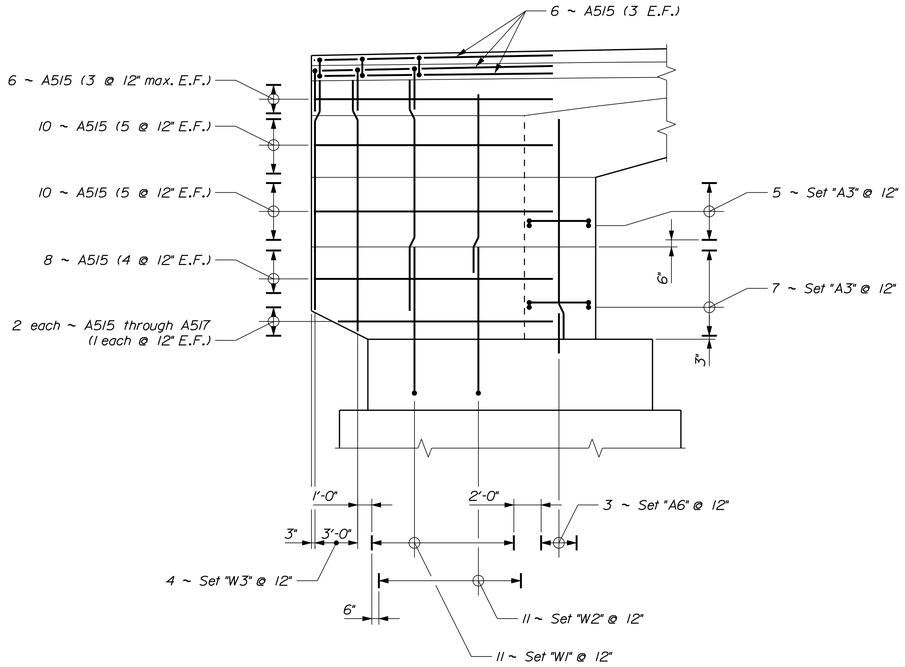

TYPICAL WINGWALL & ABUTMENT REINFORCING ELEVATION

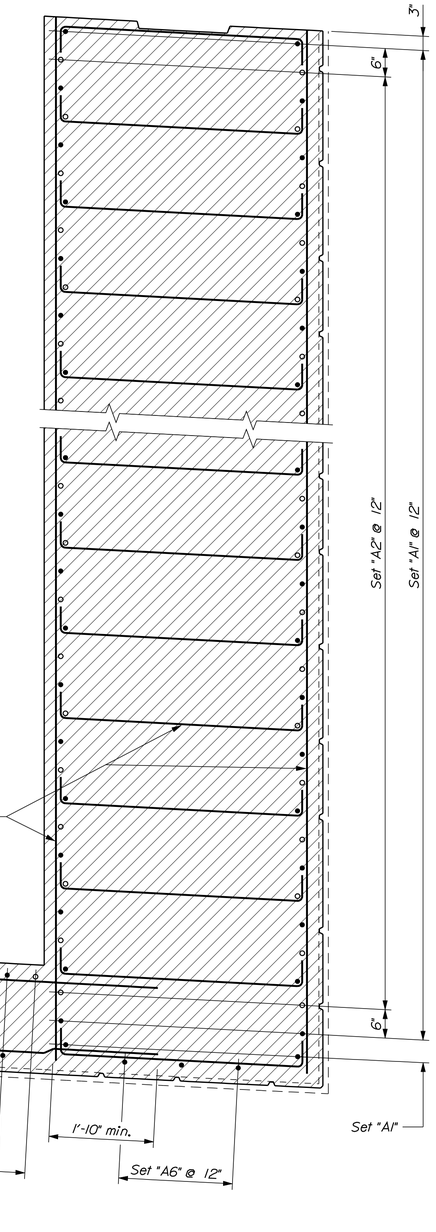

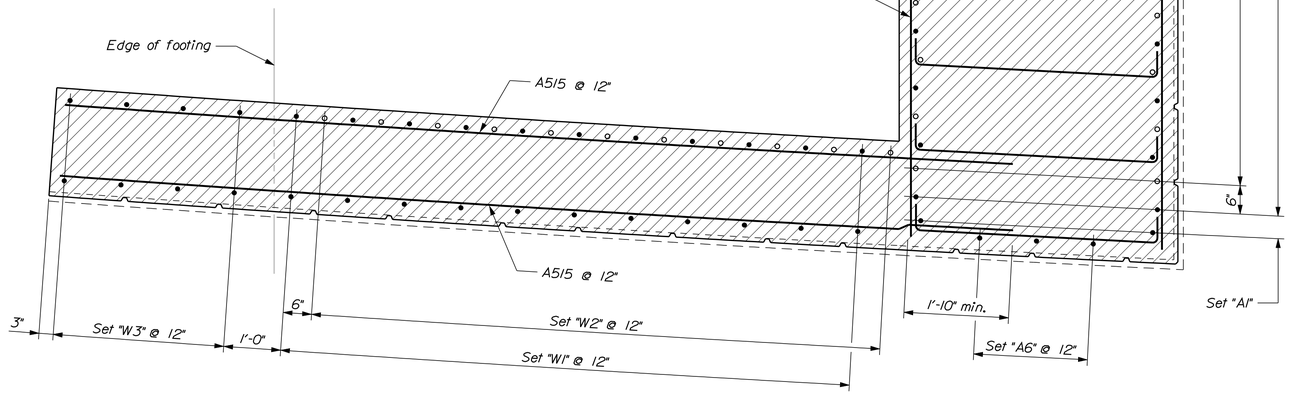

TYPICAL HALF ABUTMENT & WINGWALL REINFORCING PLAN

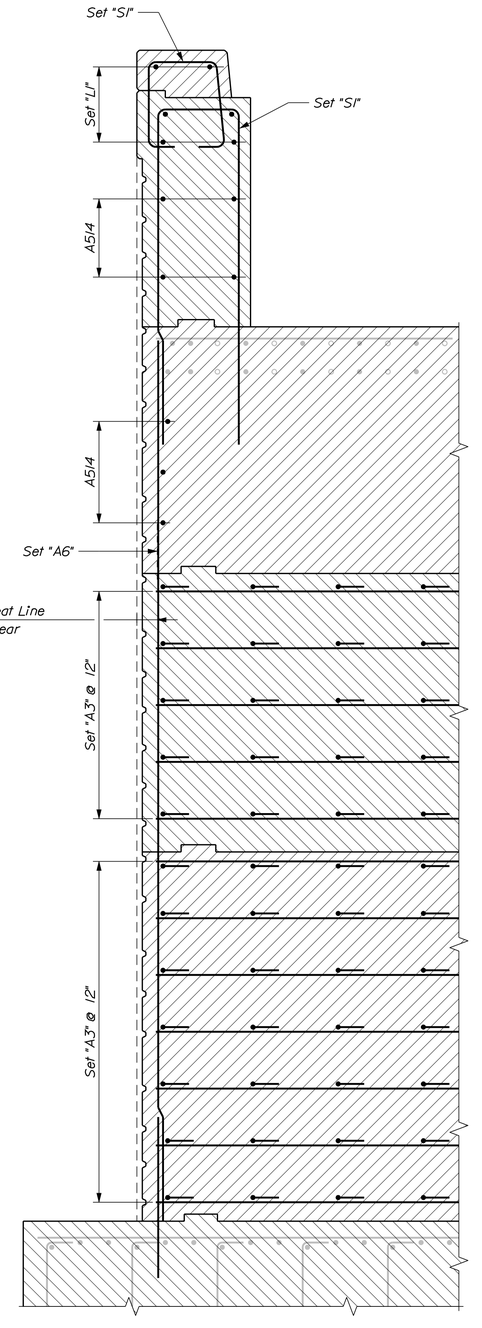

TYPICAL END OF BREASTWALL REINFORCING SECTION

Filename: ...\091_Abutment & Wingwall Reinforcing.dgn Division: BRIDGE Username: dana.damren Date:7/20/2010

STATE OF MAINE
DEPARTMENT OF TRANSPORTATION

BH-A106(000)

PIN 11060.00

BRIDGE NO. 2047

BRIDGE PLANS

PROJ. MANAGER	J. Wentworth	BY	DATE
DESIGN-DETAILED	J. Folsom	D. Damren	July 2010
CHECKED-REVIEWED	-----	-----	-----
DESIGN2-DETAILED2	-----	-----	-----
DESIGN3-DETAILED3	-----	-----	-----
REVISIONS 1	-----	-----	-----
REVISIONS 2	-----	-----	-----
REVISIONS 3	-----	-----	-----
REVISIONS 4	-----	-----	-----
FIELD CHANGES	-----	-----	-----

SIGNATURE

P.E. NUMBER

DATE

NAPLES BAY BRIDGE
CHUTES RIVER
NAPLES CUMBERLAND COUNTY

ARCH & WINGWALL REINF.

SHEET NUMBER

91

OF 160

TYPICAL WINGWALL REINFORCING SECTION

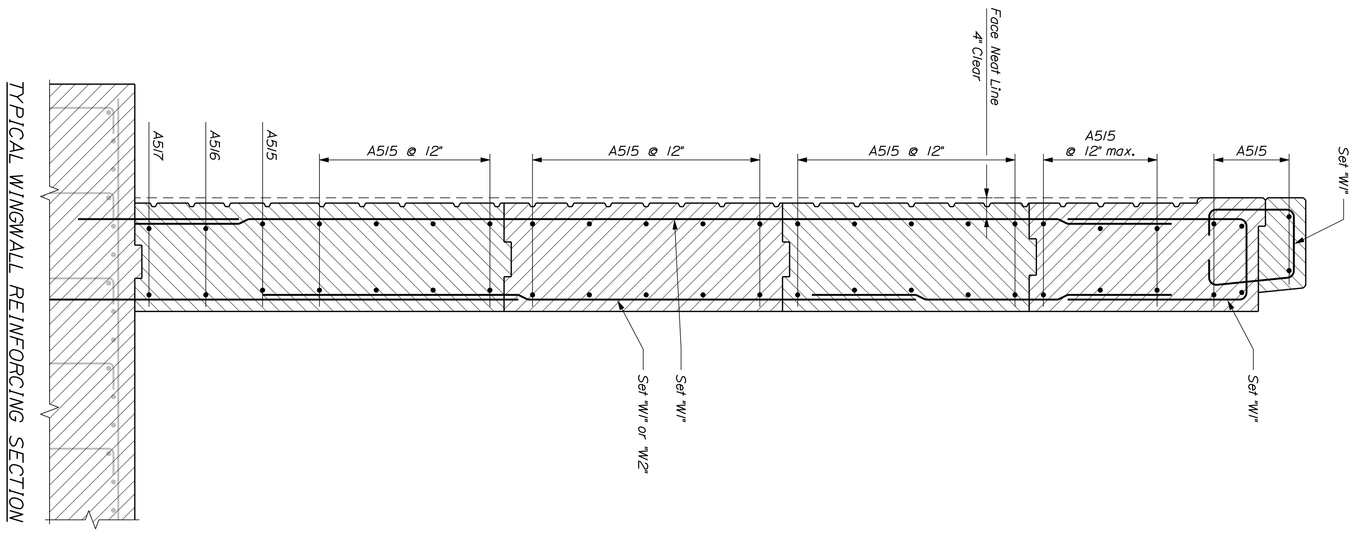

WINGWALL OVERHANG REINFORCING SECTION

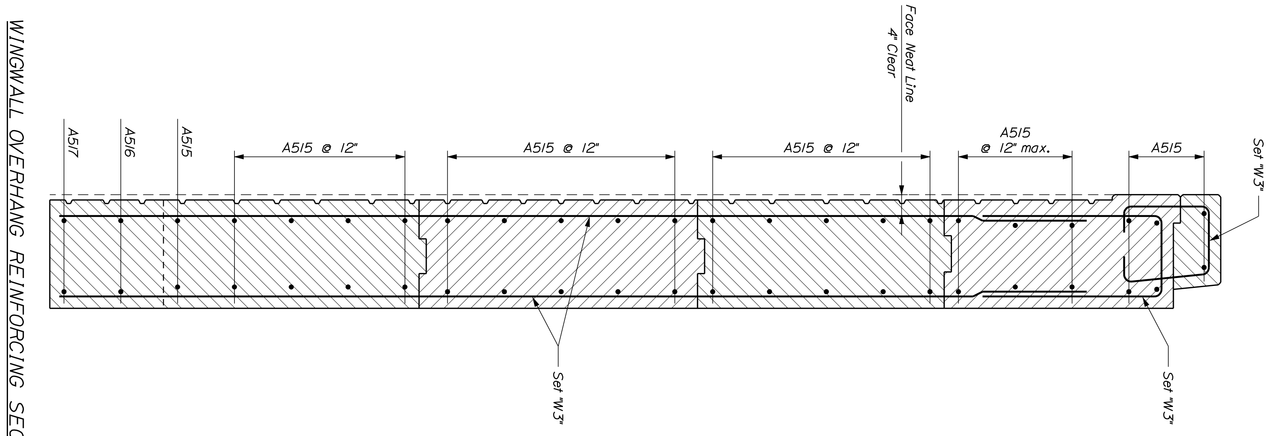

NAPLES BAY BRIDGE
CHUTES RIVER
NAPLES CUMBERLAND COUNTY

WINGWALL REINFORCING

		BY	DATE
PROJ. MANAGER	J. Wentworth		
DESIGN-DETAILED	J. Folsom	D. Damren	July 2010
CHECKED-REVIEWED	_____	_____	_____
DESIGN2-DETAILED2	_____	__	_____
DESIGN3-DETAILED3	_____	_____	_____
REVISIONS 1	_____		_____
REVISIONS 2	_____		_____
REVISIONS 3	_____		_____
REVISIONS 4	_____		_____
FIELD CHANGES	_____		_____

SIGNATURE

P.E. NUMBER

DATE

STATE OF MAINE
DEPARTMENT OF TRANSPORTATION

BH-A106(000)

PIN 11060.00

BRIDGE NO. 2047

BRIDGE PLANS

SHEET NUMBER 92 OF 160

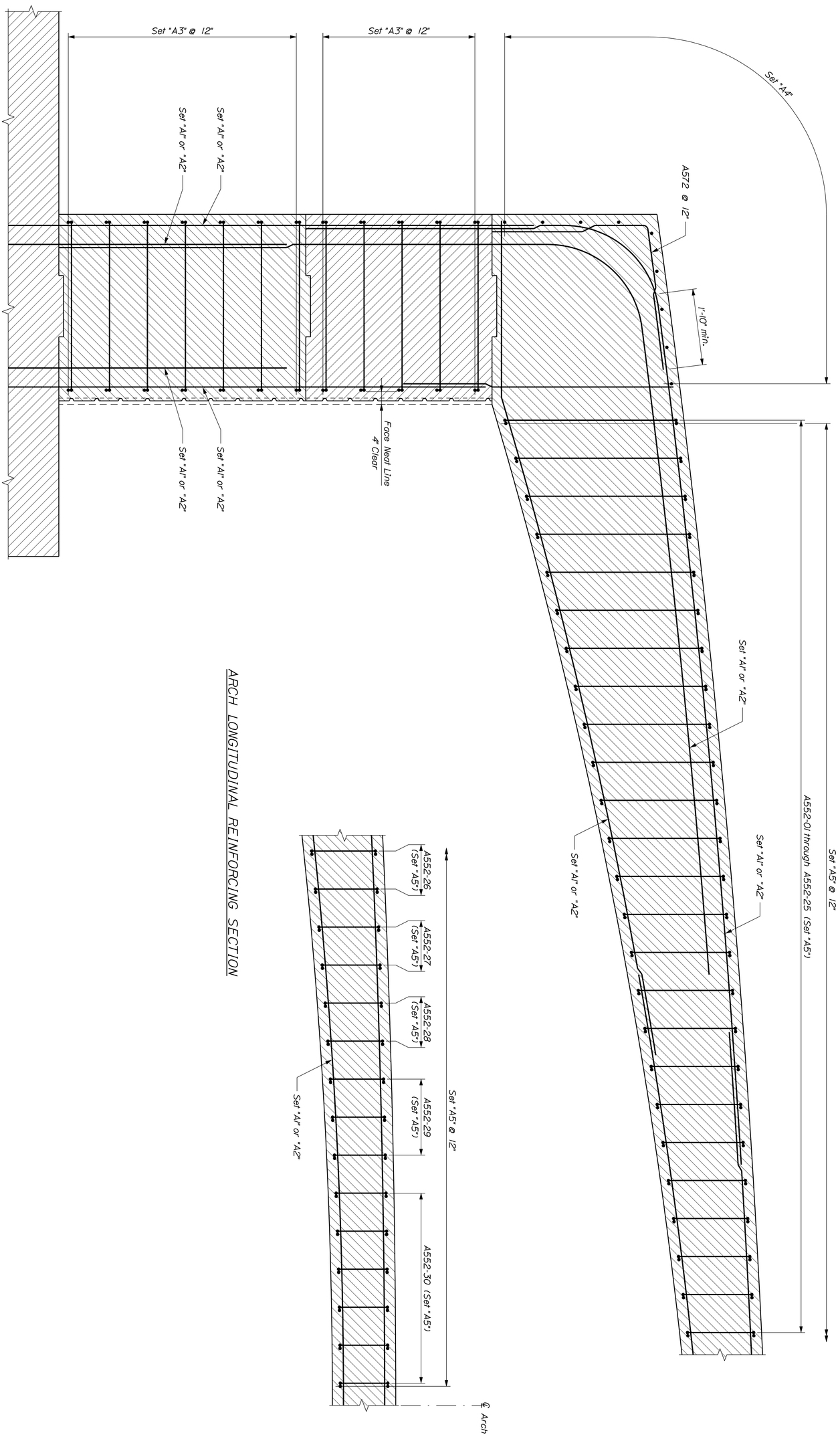

ARCH LONGITUDINAL REINFORCING SECTION

PROJ. MANAGER	J. Wentworth	BY	DATE
DESIGN-DETAILED	J. Folsom	D. Damren	July 2010
CHECKED-REVIEWED	_____	_____	_____
DESIGN2-DETAILED2	_____	__	_____
DESIGN3-DETAILED3	_____	_____	_____
REVISIONS 1	_____		_____
REVISIONS 2	_____		_____
REVISIONS 3	_____		_____
REVISIONS 4	_____		_____
FIELD CHANGES	_____		_____

SIGNATURE

P.E. NUMBER

DATE

SHEET NUMBER 93 OF 160

NAPLES BAY BRIDGE
CHUTES RIVER
NAPLES CUMBERLAND COUNTY

ARCH LONG. REINF. SECTION

STATE OF MAINE
DEPARTMENT OF TRANSPORTATION

BH-A106(000)

PIN 11060.00

BRIDGE NO. 2047

BRIDGE PLANS

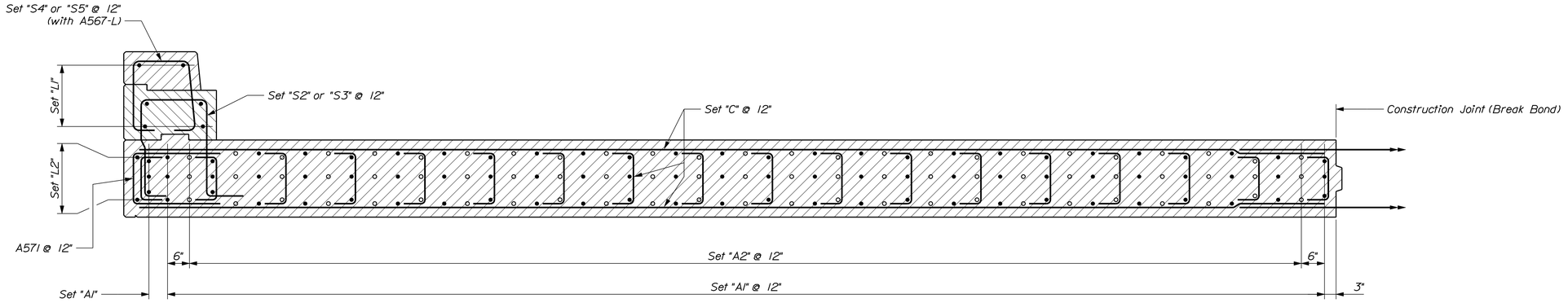

ARCH HALF TRANSVERSE REINFORCING SECTION

Section at Crown shown

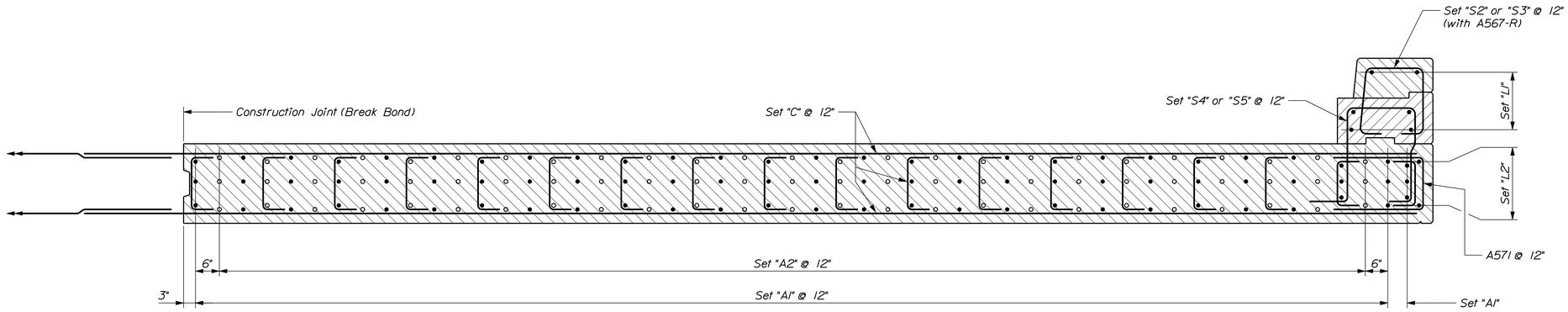

ARCH HALF TRANSVERSE REINFORCING SECTION

Section at Crown shown

STATE OF MAINE
DEPARTMENT OF TRANSPORTATION

BH-A106(000)

PIN 11060.00

BRIDGE NO. 2047

BRIDGE PLANS

PROJ. MANAGER	J. Wentworth	BY	DATE
DESIGN-DETAILED	J. Folsom	D. Domren	July 2010
CHECKED-REVIEWED	------	------	------
DESIGN2-DETAILED2	------	--	------
DESIGN3-DETAILED3	------	----------	------
REVISIONS 1	------	------	------
REVISIONS 2	------	------	------
REVISIONS 3	------	------	------
REVISIONS 4	------	------	------
FIELD CHANGES	------	------	------

SIGNATURE

P.E. NUMBER

DATE

NAPLES BAY BRIDGE
CHUTES RIVER
NAPLES CUMBERLAND COUNTY

ARCH TRANS. REINF. SECTION

SHEET NUMBER

94

OF 160

Filename: ...\094_Arch Reinforcing Sections.dgn Division: BRIDGE Username: dona.domren Date:7/20/2010

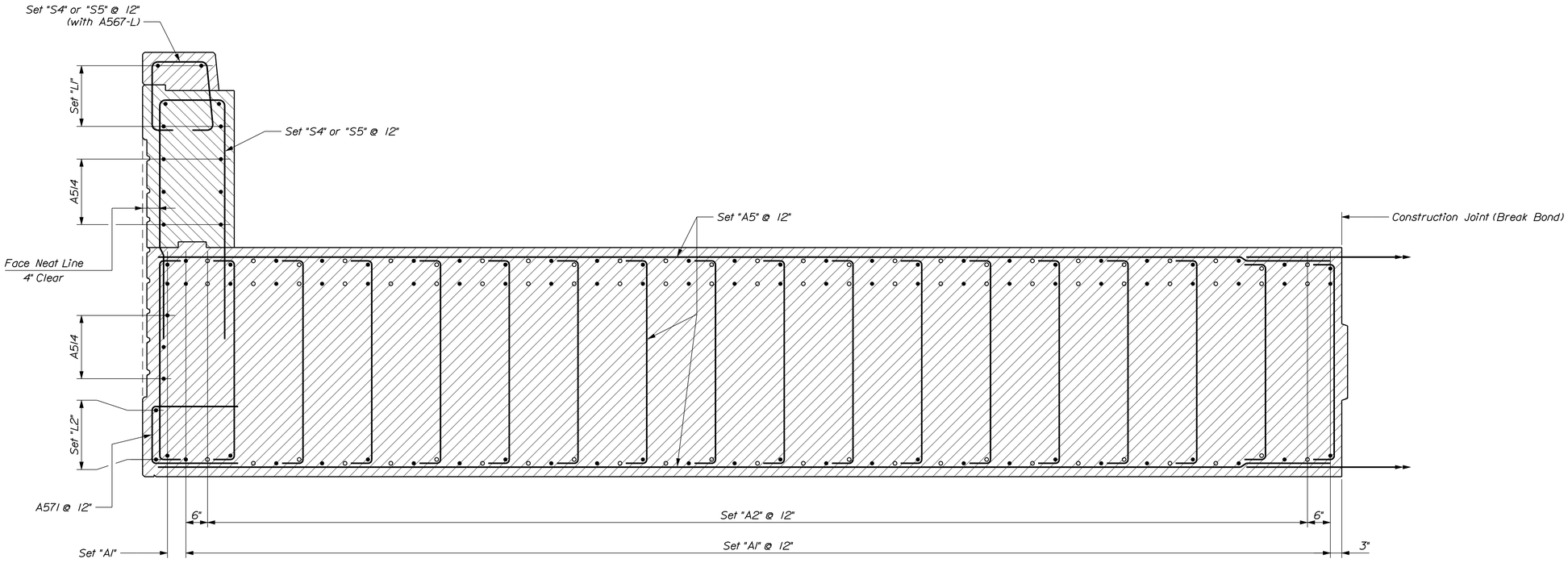

ARCH HALF TRANSVERSE REINFORCING SECTION

Section at Abutment shown

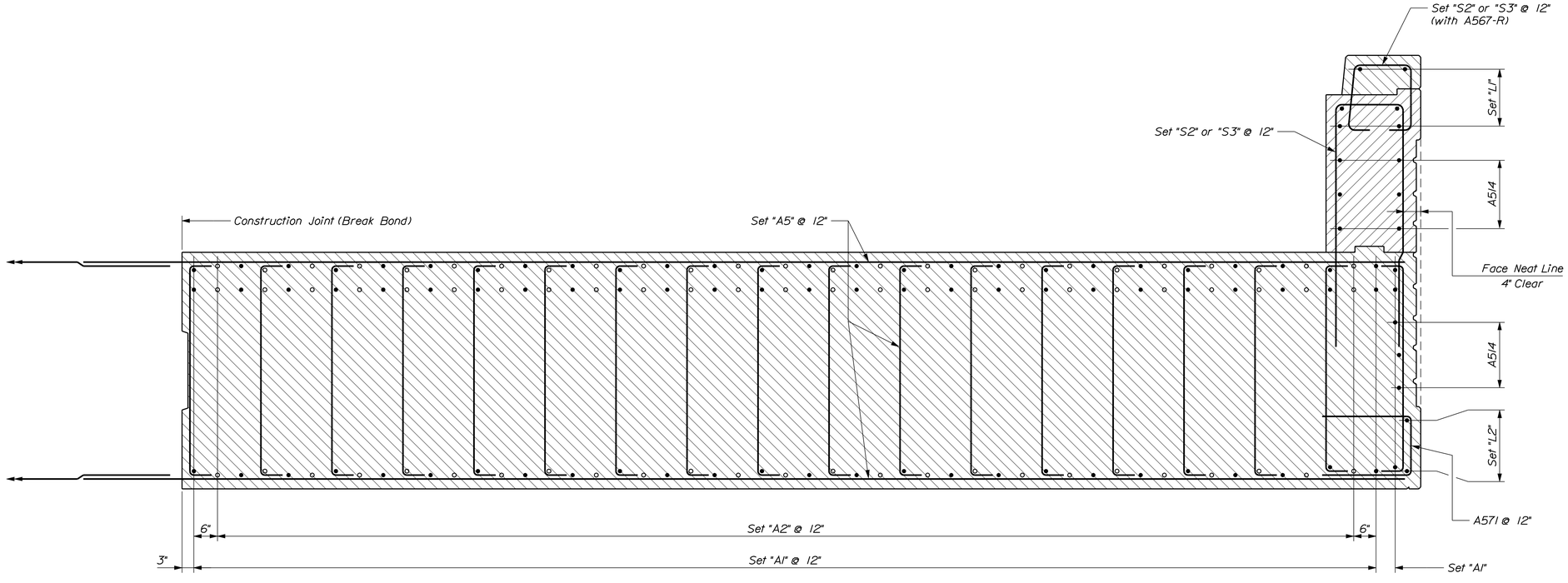

ARCH HALF TRANSVERSE REINFORCING SECTION

Section at Abutment shown

STATE OF MAINE
DEPARTMENT OF TRANSPORTATION

BH-A106(000)

PIN 11060.00

BRIDGE NO. 2047

BRIDGE PLANS

PROJ. MANAGER	J. Wentworth	BY	DATE
DESIGN-DETAILED	J. Folsom	D. Domren	July 2010
CHECKED-REVIEWED	-----	-----	-----
DESIGN2-DETAILED2	-----	-----	-----
DESIGN3-DETAILED3	-----	-----	-----
REVISIONS 1	-----	-----	-----
REVISIONS 2	-----	-----	-----
REVISIONS 3	-----	-----	-----
REVISIONS 4	-----	-----	-----
FIELD CHANGES	-----	-----	-----

SIGNATURE

P.E. NUMBER

DATE

NAPLES BAY BRIDGE
CHUTES RIVER
NAPLES CUMBERLAND COUNTY

ARCH TRANS. REINF. SECTION

SHEET NUMBER

95

OF 160

Filename: ...\095_Arch Reinforcing Sections.dgn Division: BRIDGE Username: dona.domren Date:7/20/2010

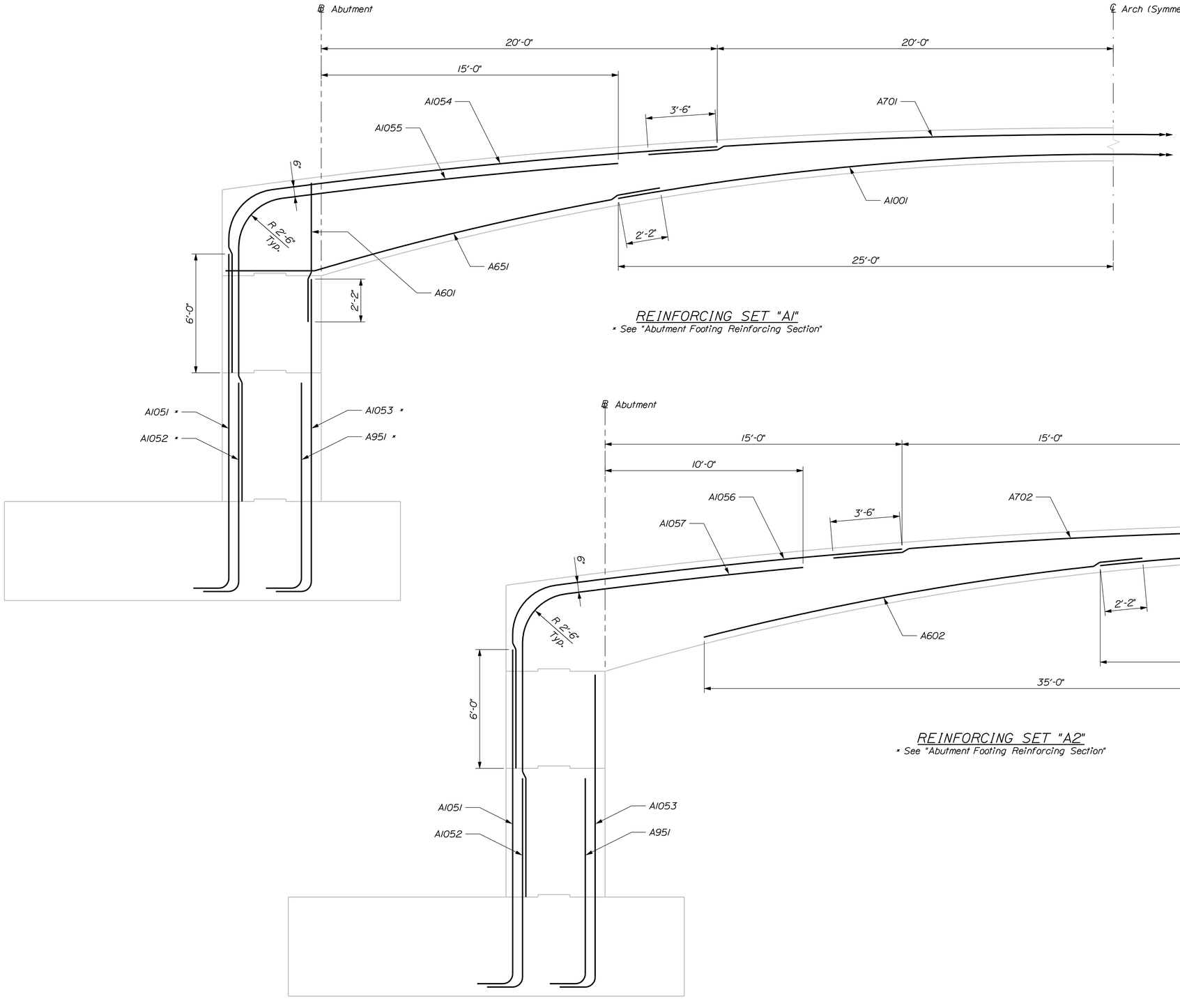

REINFORCING SET "A1"

* See "Abutment Footing Reinforcing Section"

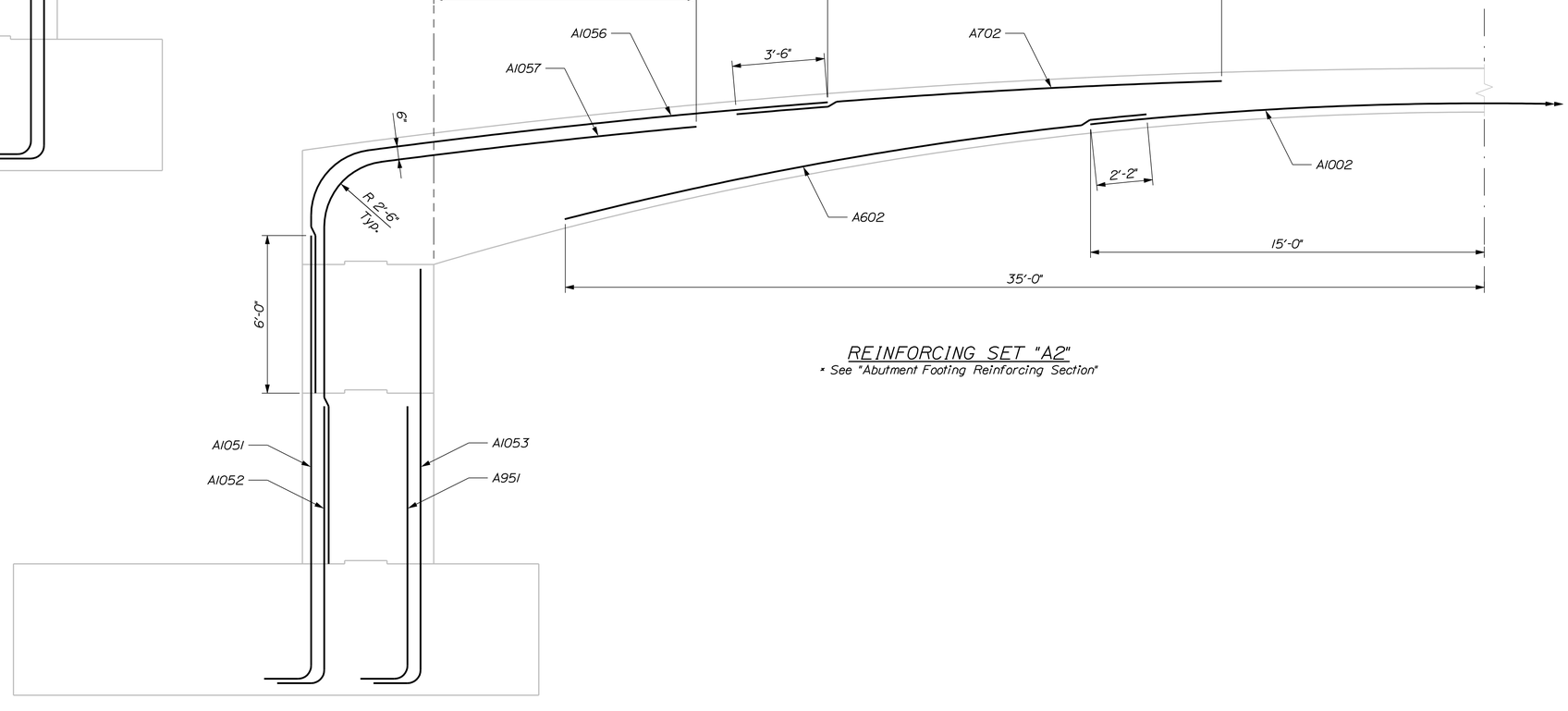

REINFORCING SET "A2"

* See "Abutment Footing Reinforcing Section"

STATE OF MAINE
DEPARTMENT OF TRANSPORTATION

BH-A106(000)

PIN 11060.00

BRIDGE NO. 2047

BRIDGE PLANS

	BY	DATE
PROJ. MANAGER	J. Wentworth	
DESIGN-DETAILED	J. Folsom	July 2010
CHECKED-REVIEWED	-----	-----
DESIGN2-DETAILED2	-----	-----
DESIGN3-DETAILED3	-----	-----
REVISIONS 1	-----	-----
REVISIONS 2	-----	-----
REVISIONS 3	-----	-----
REVISIONS 4	-----	-----
FIELD CHANGES	-----	-----

SIGNATURE

P.E. NUMBER

DATE

NAPLES BAY BRIDGE
CHUTES RIVER
NAPLES CUMBERLAND COUNTY

ARCH REINF. SET DIAGRAMS

SHEET NUMBER

96

OF 160

Filename: ...\096_Arch Reinforcing Diagrams.dgn Division: BRIDGE Username: dona.damren Date:7/20/2010

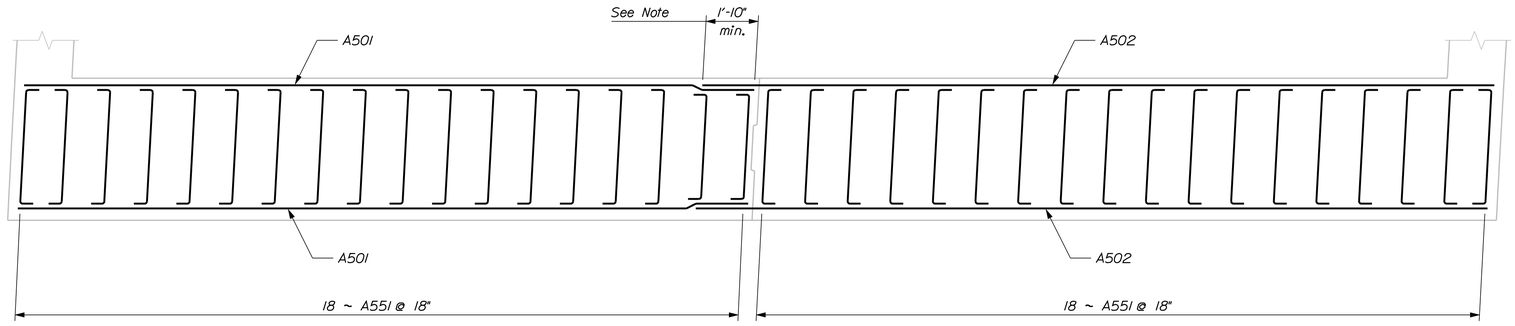

REINFORCING SET "A3"

Note:
The location of the lap splice is dependant
on the Contractor's sequence of construction

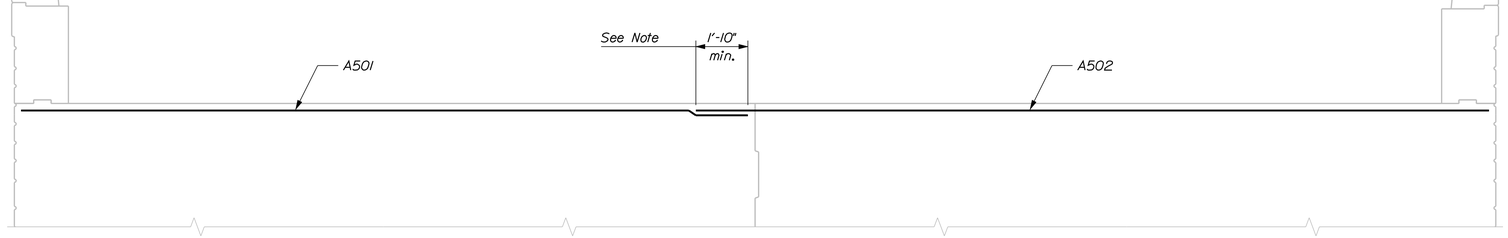

REINFORCING SET "A4"

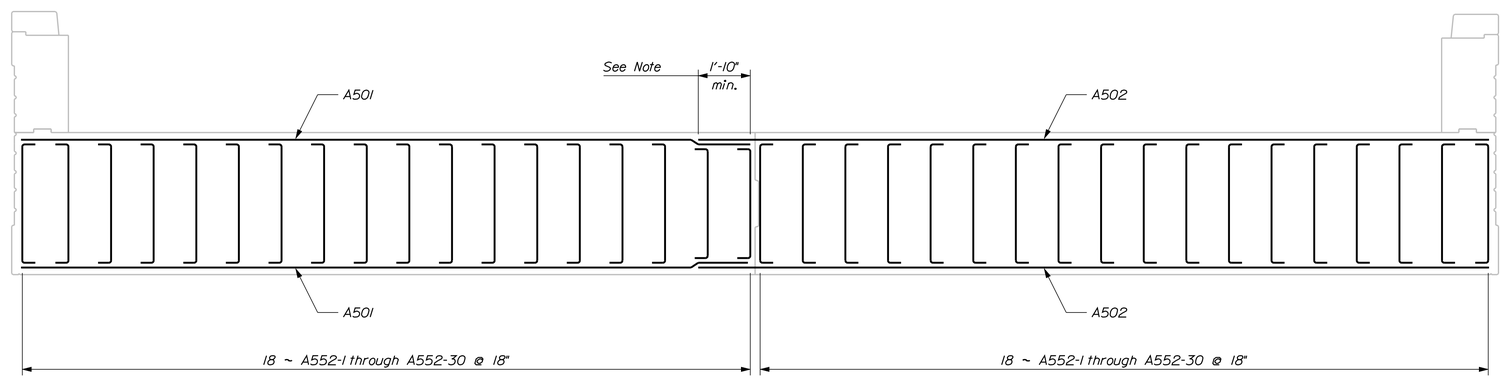

REINFORCING SET "A5"

STATE OF MAINE
DEPARTMENT OF TRANSPORTATION

BH-A106(000)

PIN 11060.00

BRIDGE NO. 2047

BRIDGE PLANS

	BY	DATE
PROJ. MANAGER	J. Wentworth	
DESIGN-DETAILED	D. Domren	July 2010
CHECKED-REVIEWED	J. Folsom	------
DESIGN2-DETAILED2	-----	------
DESIGN3-DETAILED3	-----	------
REVISIONS 1	-----	------
REVISIONS 2	-----	------
REVISIONS 3	-----	------
REVISIONS 4	-----	------
FIELD CHANGES	-----	------

SIGNATURE

P.E. NUMBER

DATE

NAPLES BAY BRIDGE
CHUTES RIVER
CUMBERLAND COUNTY
NAPLES

ARCH REINF. SET DIAGRAMS

SHEET NUMBER

97

OF 160

Filename: ...\097_Arch Reinforcing Diagrams.dgn Division: BRIDGE Username: dona.domren Date:7/20/2010

Filename: ...\098_Arch Reinforcing Sections.dgn Division: BRIDGE Username: dana.damren Date:7/20/2010

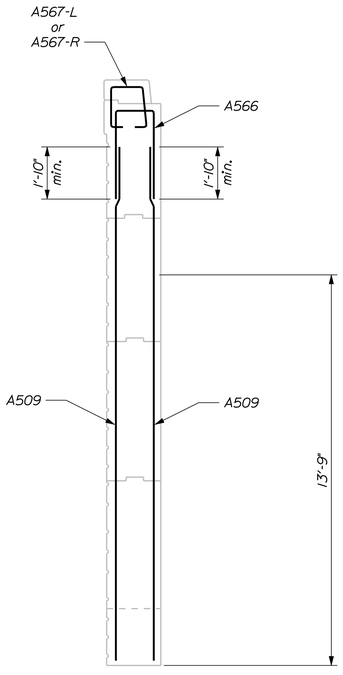

REINFORCING SET "W3"

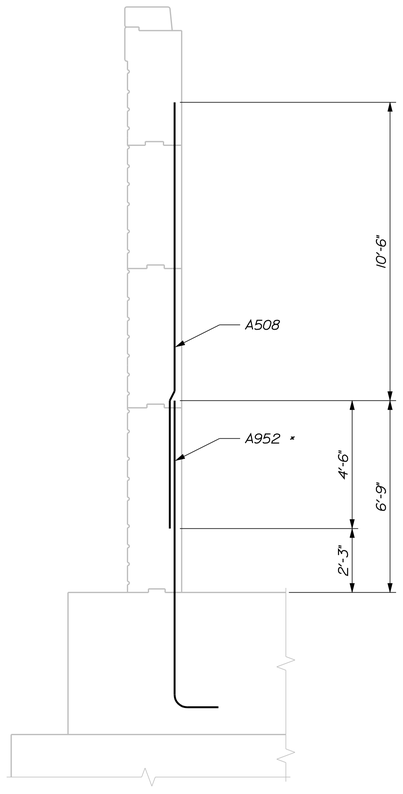

REINFORCING SET "W2"
* See "Wingwall Footing Reinforcing Section"

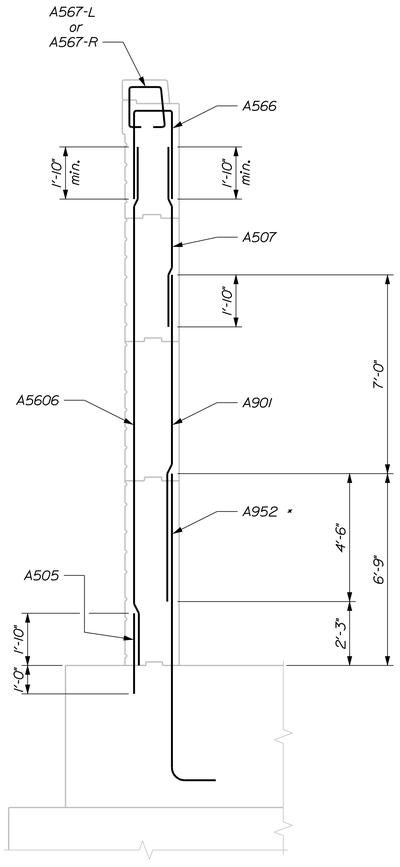

REINFORCING SET "W1"
* See "Wingwall Footing Reinforcing Section"

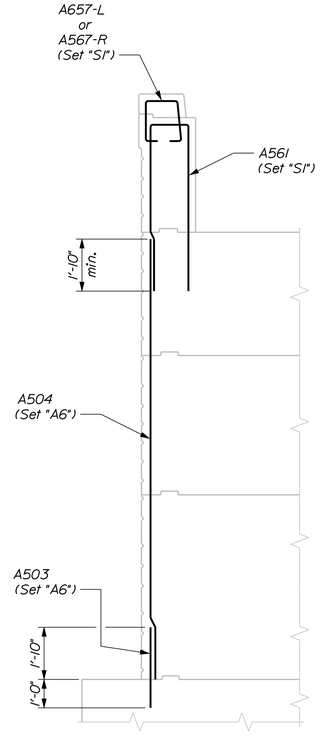

REINFORCING SETS "A6" & "S1"

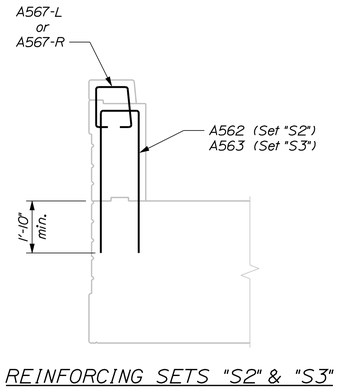

REINFORCING SETS "S2" & "S3"

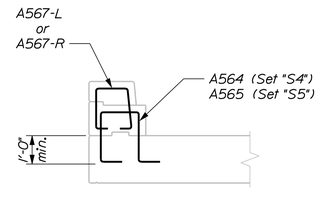

REINFORCING SETS "S4" & "S5"

STATE OF MAINE
DEPARTMENT OF TRANSPORTATION

BH-A106(000)

PIN **11060.00**

BRIDGE NO. 2047 BRIDGE PLANS

		BY	DATE
PROJ. MANAGER	J. Wentworth		
DESIGN-DETAILED	J. Folsom	D. Damren	July 2010
CHECKED-REVIEWED			
DESIGN2-DETAILED2			
DESIGN3-DETAILED3			
REVISIONS 1			
REVISIONS 2			
REVISIONS 3			
REVISIONS 4			
FIELD CHANGES			

SIGNATURE

P.E. NUMBER

DATE

NAPLES BAY BRIDGE
CHUTES RIVER
NAPLES CUMBERLAND COUNTY

ARCH REINF. SET DIAGRAMS

SHEET NUMBER

98

OF 160

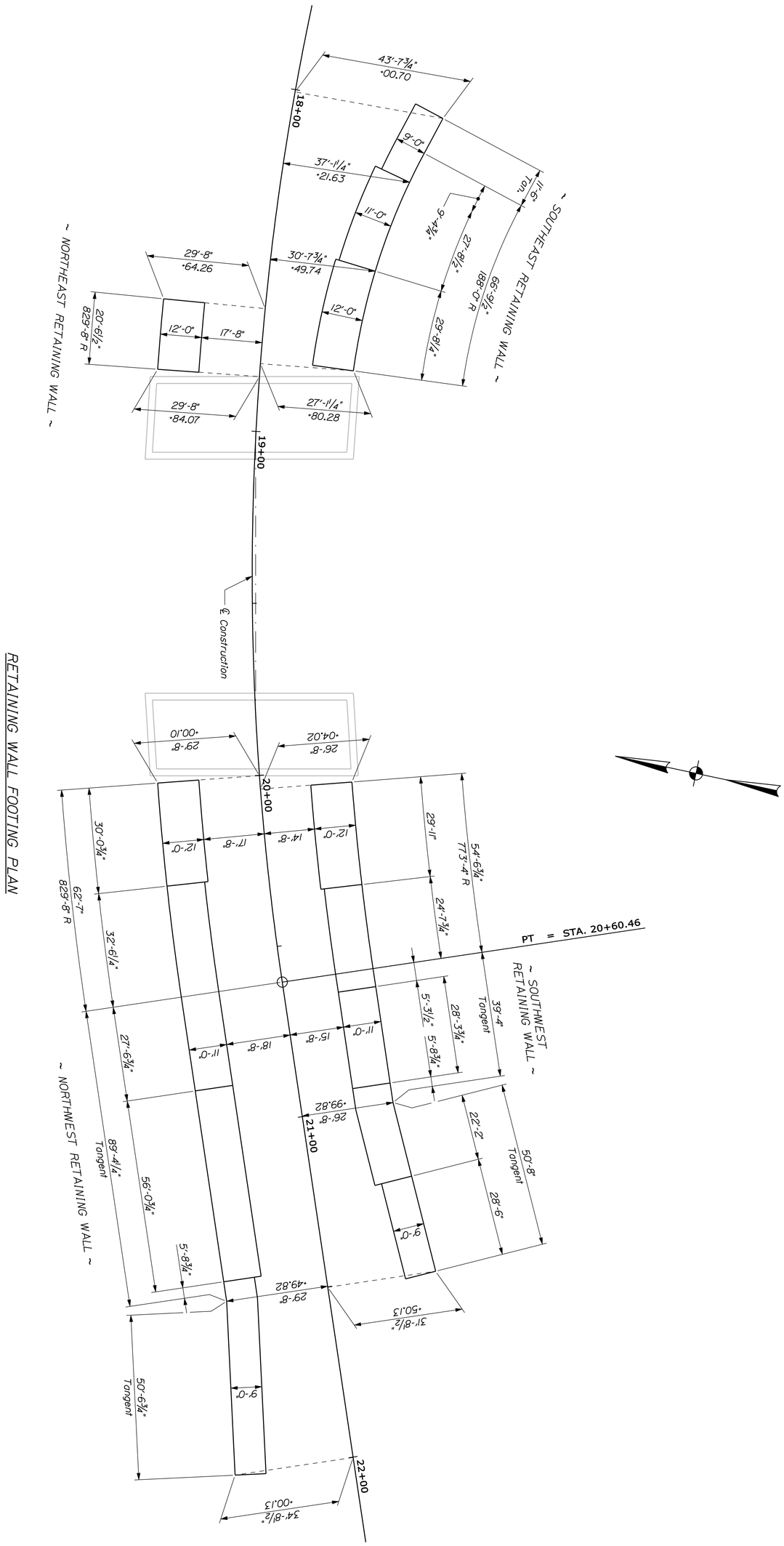

NAPLES BAY BRIDGE CHUTES RIVER NAPLES CUMBERLAND COUNTY	PROJ. MANAGER	J. Wentworth	BY / DATE
	DESIGN-DETAILED	J. Folsom	D. Damren / July 2010
	CHECKED-REVIEWED	_____	_____ / _____
	DESIGN2-DETAILED2	_____	__ / _____
	DESIGN3-DETAILED3	_____	_____ / _____
	REVISIONS 1	_____	_____
	REVISIONS 2	_____	_____
	REVISIONS 3	_____	_____
	REVISIONS 4	_____	_____
	FIELD CHANGES	_____	_____

SIGNATURE

P.E. NUMBER

DATE

STATE OF MAINE
DEPARTMENT OF TRANSPORTATION

BH-A106(000)

PIN 11060.00

BRIDGE NO. 2047

BRIDGE PLANS

SHEET NUMBER 99 OF 160

RETAINING WALL FTG. PLAN

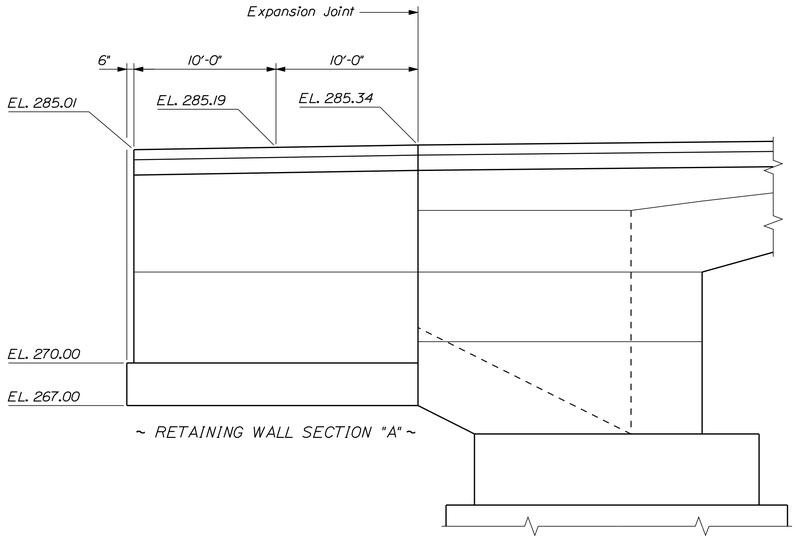

NORTHEAST RETAINING WALL ELEVATION

RETAINING WALL NOTES

1. The maximum factored applied footing pressure is 4.9 ksf.

2. Payment for cofferdams required for construction of the retaining walls will be considered incidental to the adjacent abutment cofferdam pay items.

3. Structural Earth Excavation. Abutments and Retaining Walls, required more than 12 inches below the bottom of the structure, will be paid for in accordance with Standard Specifications Section 206, Structural Excavation.

4. Retaining walls in fill areas shall be constructed on a minimum 12-in. thick layer of granular borrow.

5. Reinforcing steel shall have a minimum concrete cover of 2 inches in the walls and 3 inches in the footings unless otherwise noted.

6. Place 4-in. diameter drains in the breastwall and wingwalls at 10-ft maximum spacing. The exact location will be determined by the Resident.

7. Provide 3 additional stirrups in the curbs at each Transition Barrier location.

8. The Contractor shall install Transition Barrier vertical closed stirrups, as shown in Standard Details Section 526, prior to the placement of the curb concrete.

9. Cover joints where waterstops are not required in accordance with Standard Details Section 502.

10. Construct French Drains behind the retaining walls in accordance with Standard Specifications Section 512, French Drains.

11. Retaining walls and their footings shall be backfilled with Granular Borrow. Pay limits will be the structural excavation limits in cut areas and a vertical plane located 10 feet behind the walls in fill areas.

12. At the option of the Contractor, granular borrow placed under water may be substituted with crushed stone meeting the requirements of Subsection 703.31. Crushed stone shall be separated from other backfill material using erosion control geotextile meeting the requirements of Subsection 722.03. Payment for crushed stone so substituted will be made under Item No. 203.05, Granular Borrow. Payment for geotextile will be considered incidental to the same pay item.

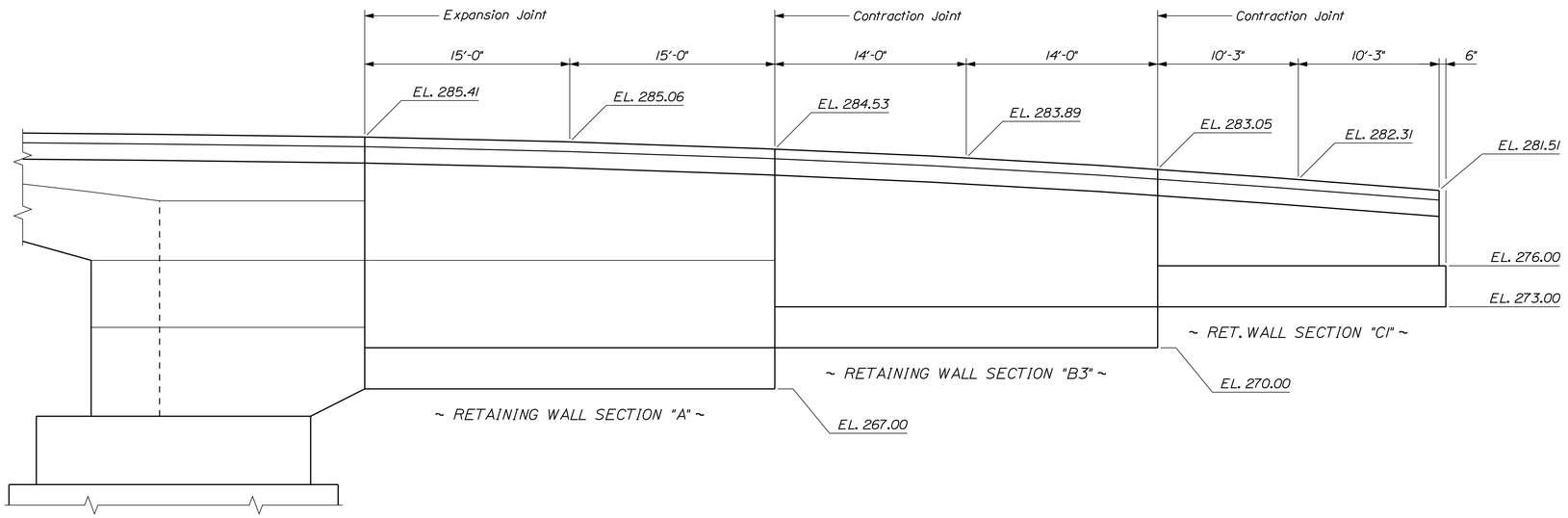

SOUTHEAST RETAINING WALL ELEVATION

STATE OF MAINE
DEPARTMENT OF TRANSPORTATION

BH-A106(000)

PIN 11060.00

BRIDGE NO. 2047

BRIDGE PLANS

PROJ. MANAGER	J. Wentworth		
DESIGN-DETAILED	J. Folsom	D. Domren	July 2010
CHECKED-REVIEWED	-----	-----	-----
DESIGN2-DETAILED2	-----	--	-----
DESIGN3-DETAILED3	-----	----------	-----
REVISIONS 1	-----	-----	-----
REVISIONS 2	-----	-----	-----
REVISIONS 3	-----	-----	-----
REVISIONS 4	-----	-----	-----
FIELD CHANGES	-----	-----	-----

SIGNATURE

P.E. NUMBER

DATE

NAPLES BAY BRIDGE
CHUTES RIVER
NAPLES CUMBERLAND COUNTY

RET. WALL ELEVATIONS

SHEET NUMBER

100

OF 160

Filename: ...\100_Retaining WallElevations.dgn Division: BRIDGE Username: dono.domren Date:7/26/2010

Filename: ...\101_Retaining Wall Elevations.dgn Division: BRIDGE Username: dana.damren Date:7/20/2010

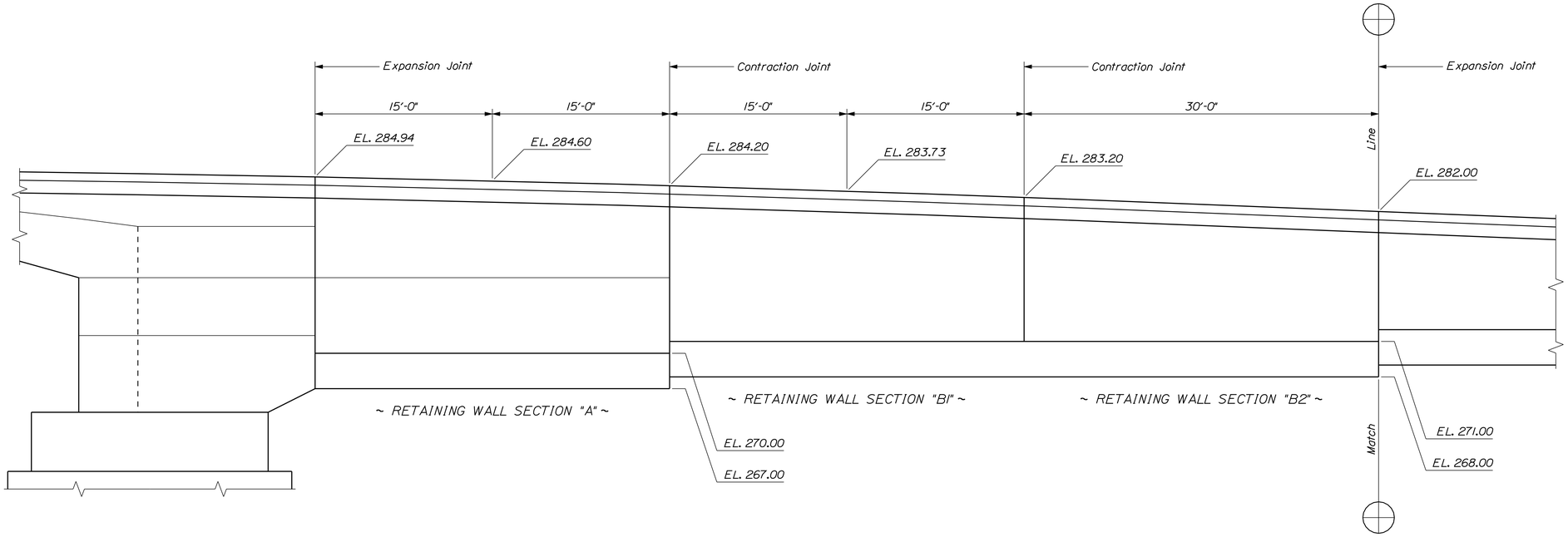

PART NORTHWEST RETAINING WALL ELEVATION

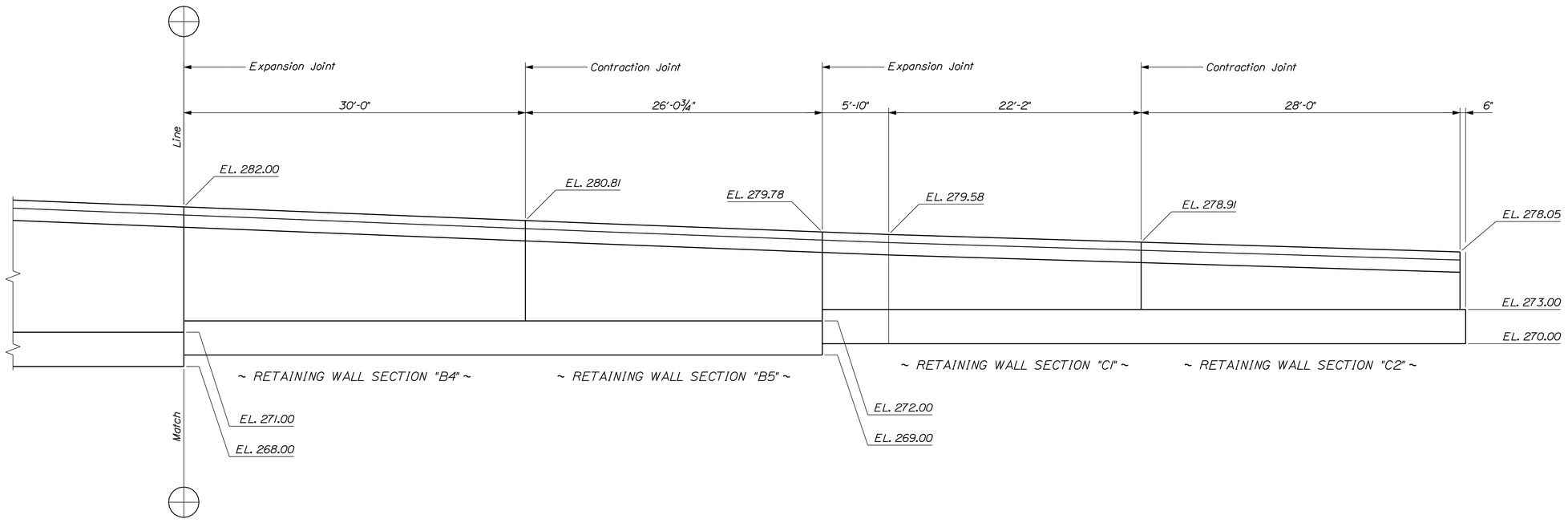

PART NORTHWEST RETAINING WALL ELEVATION

STATE OF MAINE
DEPARTMENT OF TRANSPORTATION

BH-A106(000)

PIN 11060.00

BRIDGE NO. 2047

BRIDGE PLANS

PROJ. MANAGER	J. Wentworth	BY	DATE
DESIGN-DETAILED	J. Folsom	D. Damren	July 2010
CHECKED-REVIEWED	------	------	------
DESIGN2-DETAILED2	------	--	------
DESIGN3-DETAILED3	------	----------	------
REVISIONS 1	------	------	------
REVISIONS 2	------	------	------
REVISIONS 3	------	------	------
REVISIONS 4	------	------	------
FIELD CHANGES	------	------	------

SIGNATURE

P.E. NUMBER

DATE

NAPLES BAY BRIDGE
CHUTES RIVER
NAPLES CUMBERLAND COUNTY

RET. WALL ELEVATIONS

SHEET NUMBER

101

OF 160

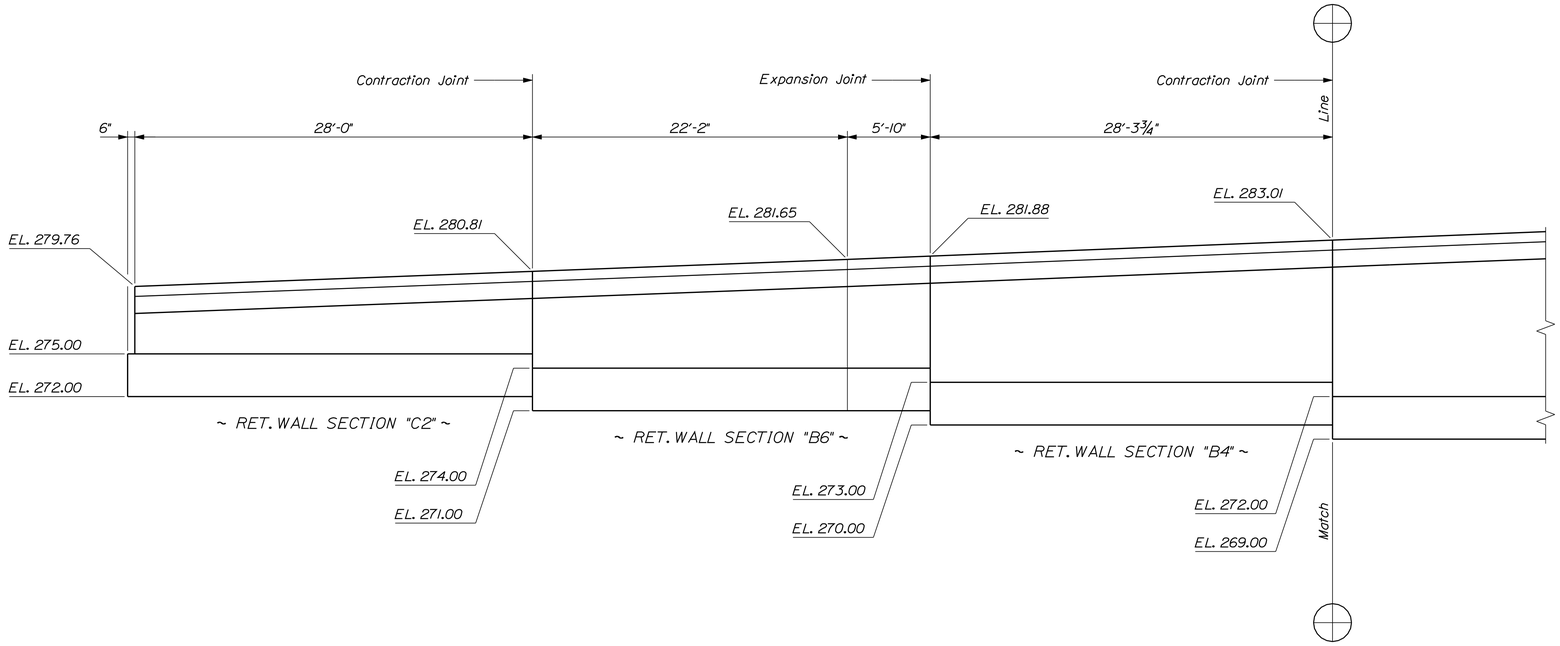

PART SOUTHWEST RETAINING WALL ELEVATION

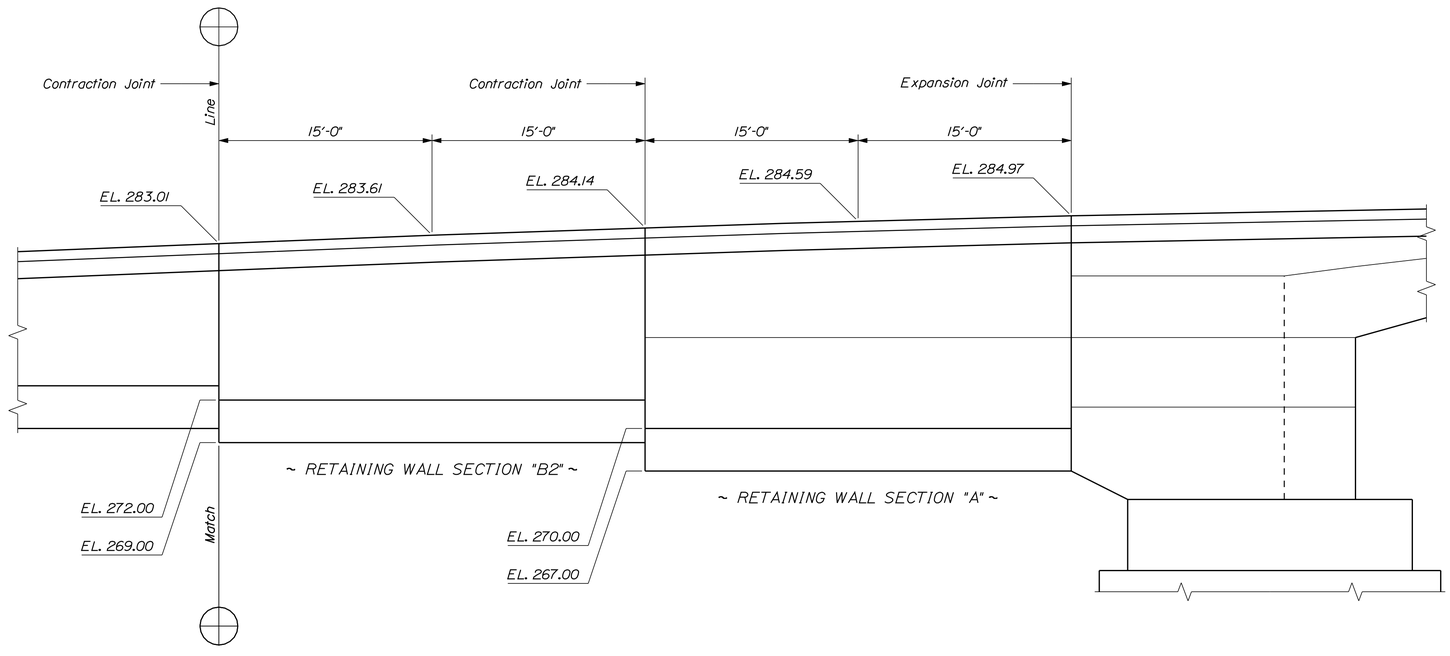

PART SOUTHWEST RETAINING WALL ELEVATION

STATE OF MAINE
DEPARTMENT OF TRANSPORTATION

BH-A106(000)

PIN 11060.00

BRIDGE NO. 2047

BRIDGE PLANS

PROJ. MANAGER	J. Wentworth	BY	DATE
DESIGN-DETAILED	J. Folsom	D. Domren	July 2010
CHECKED-REVIEWED	------	------	------
DESIGN2-DETAILED2	------	--	------
DESIGN3-DETAILED3	------	----------	------
REVISIONS 1	------	------	------
REVISIONS 2	------	------	------
REVISIONS 3	------	------	------
REVISIONS 4	------	------	------
FIELD CHANGES	------	------	------

SIGNATURE

P.E. NUMBER

DATE

NAPLES BAY BRIDGE
CHUTES RIVER
NAPLES CUMBERLAND COUNTY

RET. WALL ELEVATIONS

SHEET NUMBER

102

OF 160

Filename: ...\102_Retaining WallElevations.dgn Division: BRIDGE Username: dona.domren Date:7/20/2010

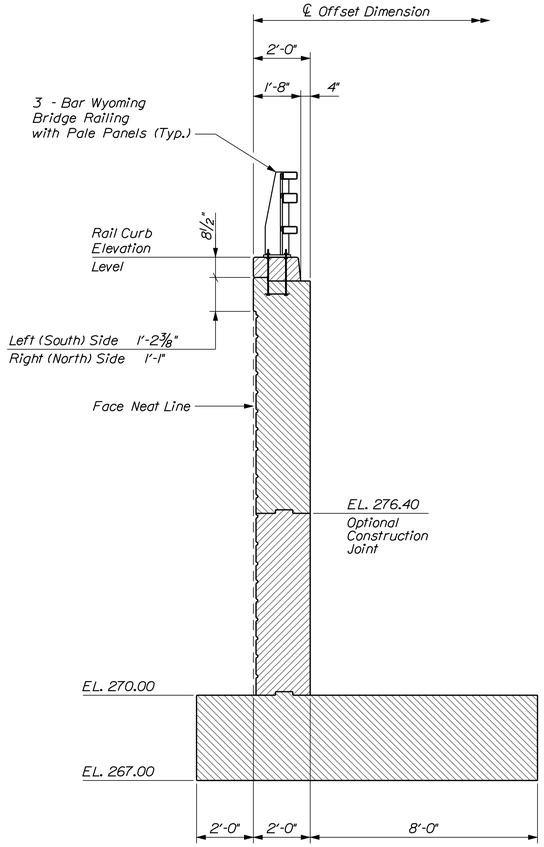

RETAINING WALL SECTION "A"

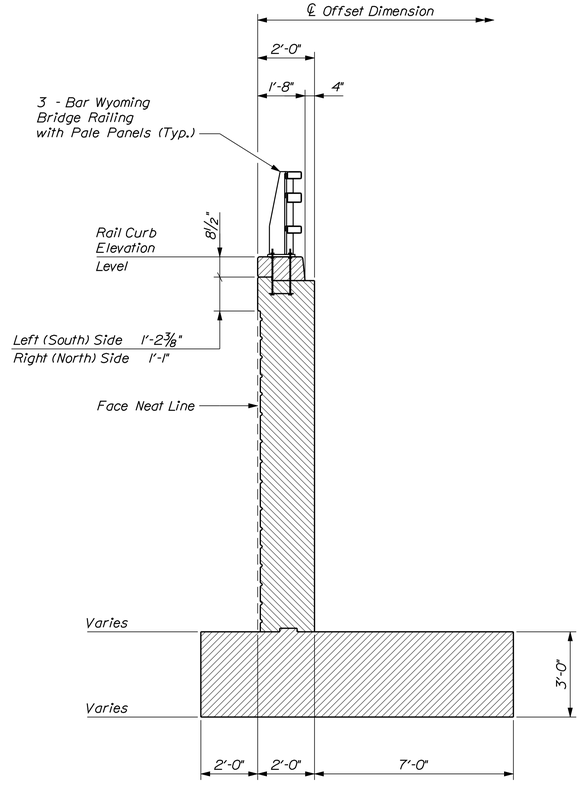

RETAINING WALL SECTION "B"

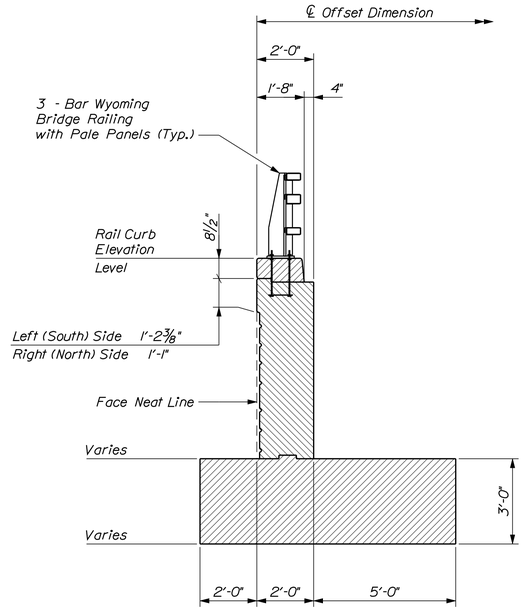

RETAINING WALL SECTION "C"

Filename: ...\103_Retaining Wall Typical Sections.dgn Division: BRIDGE

Username: dana.damren Date:7/20/2010

STATE OF MAINE
DEPARTMENT OF TRANSPORTATION

BH-A106(000)

PIN 11060.00

BRIDGE NO. 2047

BRIDGE PLANS

PROJ. MANAGER	J. Wentworth	BY	DATE	
DESIGN-DETAILED	J. Folsom	D. Damren	July 2010	
CHECKED-REVIEWED	-----	-----	-----	SIGNATURE
DESIGN2-DETAILED2	-----	--	-----	
DESIGN3-DETAILED3	-----	----------	-----	P.E. NUMBER
REVISIONS 1	-----	-----	-----	
REVISIONS 2	-----	-----	-----	DATE
REVISIONS 3	-----	-----	-----	
REVISIONS 4	-----	-----	-----	
FIELD CHANGES	-----	-----	-----	

NAPLES BAY BRIDGE
CHUTES RIVER
NAPLES CUMBERLAND COUNTY

RET. WALL TYP. SECTIONS

SHEET NUMBER

103

OF 160

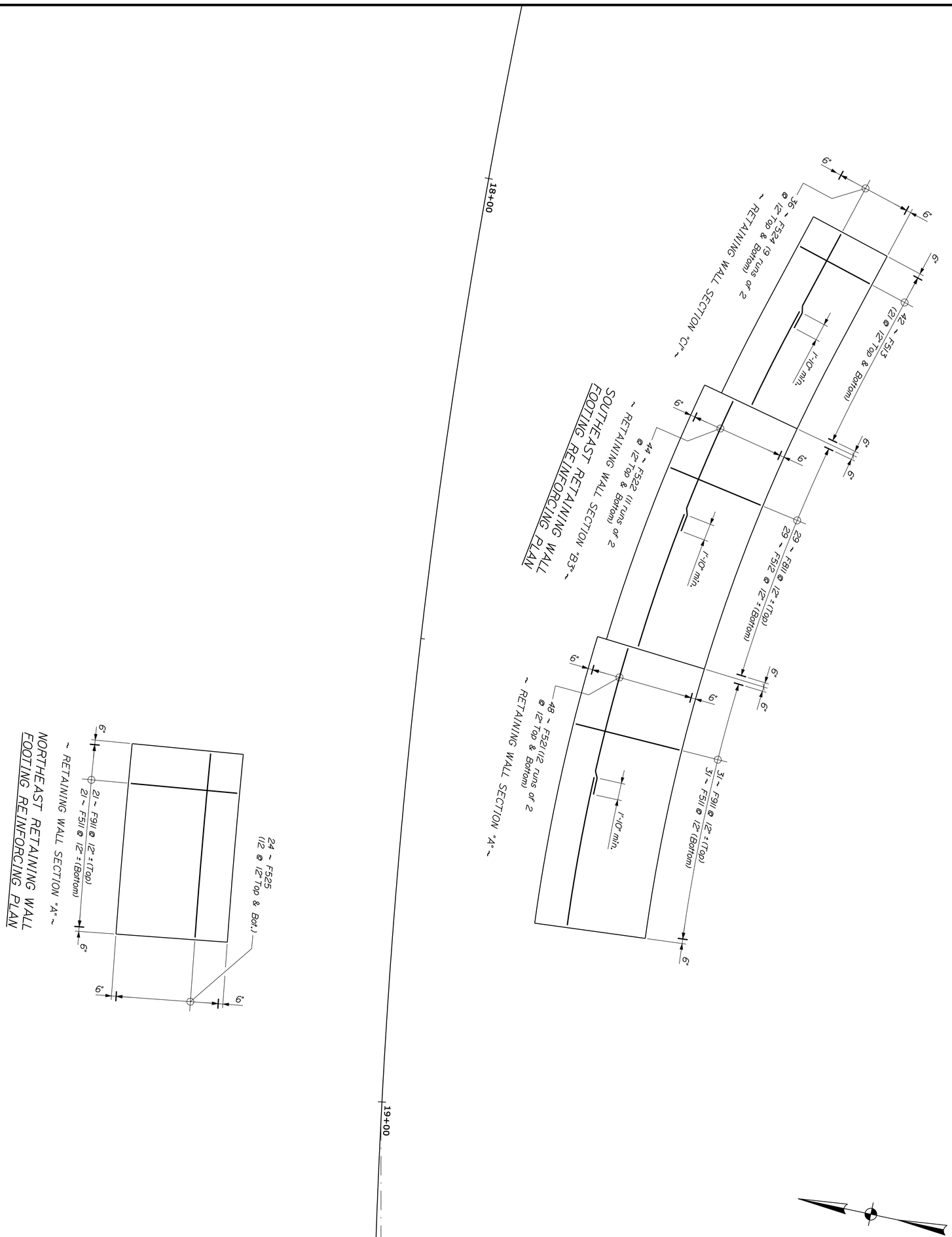

PROJ. MANAGER	J. Wentworth	BY	DATE
DESIGN-DETAILED	J. Folsom	D. Damren	July 2010
CHECKED-REVIEWED	_____	_____	_____
DESIGN2-DETAILED2	_____	__	_____
DESIGN3-DETAILED3	_____	_____	_____
REVISIONS 1	_____		_____
REVISIONS 2	_____		_____
REVISIONS 3	_____		_____
REVISIONS 4	_____		_____
FIELD CHANGES	_____		_____

SIGNATURE

P.E. NUMBER

DATE

SHEET NUMBER 104 OF 160

NAPLES BAY BRIDGE
CHUTES RIVER
NAPLES CUMBERLAND COUNTY

RET. WALL FTG. REINF. PLAN

STATE OF MAINE
DEPARTMENT OF TRANSPORTATION

BH-A106(000)

PIN 11060.00

BRIDGE NO. 2047

BRIDGE PLANS

Username: dona.domren Date:7/20/2010
Filename: ...\105_Retaining Wall Footing Reinforcing Bridge BRIDGE

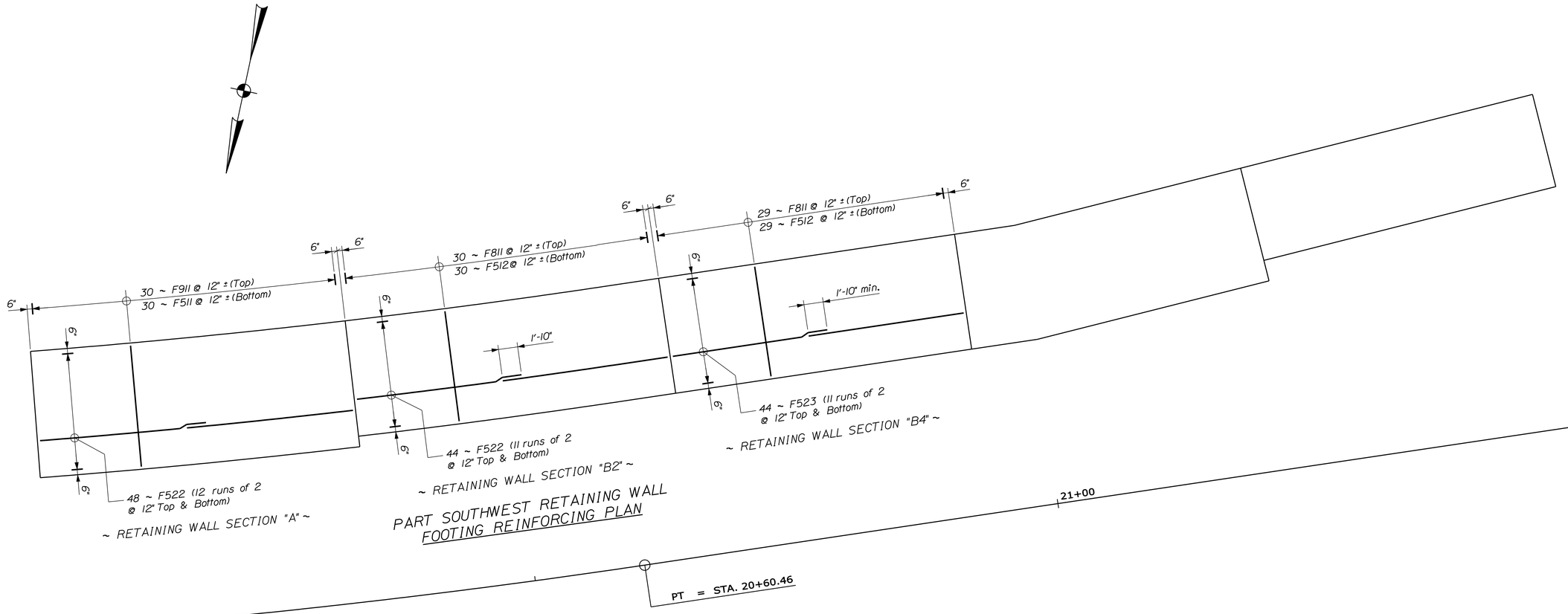

STATE OF MAINE
DEPARTMENT OF TRANSPORTATION

BH-A106(000)

PIN 11060.00

BRIDGE NO. 2047

BRIDGE PLANS

	BY	DATE
PROJ. MANAGER	J. Wentworth	
DESIGN-DETAILED	J. Folsom	July 2010
CHECKED-REVIEWED	D. Domren	------
DESIGN2-DETAILED2	-----	------
DESIGN3-DETAILED3	-----	------
REVISIONS 1	-----	------
REVISIONS 2	-----	------
REVISIONS 3	-----	------
REVISIONS 4	-----	------
FIELD CHANGES	-----	------

SIGNATURE

P.E. NUMBER

DATE

NAPLES BAY BRIDGE
CHUTES RIVER
NAPLES CUMBERLAND COUNTY

RET. WALL FTG. REINF. PLAN

SHEET NUMBER

105

OF 160

Username: dona.domren Date:7/20/2010
Filename: ...\106_Retaining Wall Footing Reinforcing Bridge BRIDGE

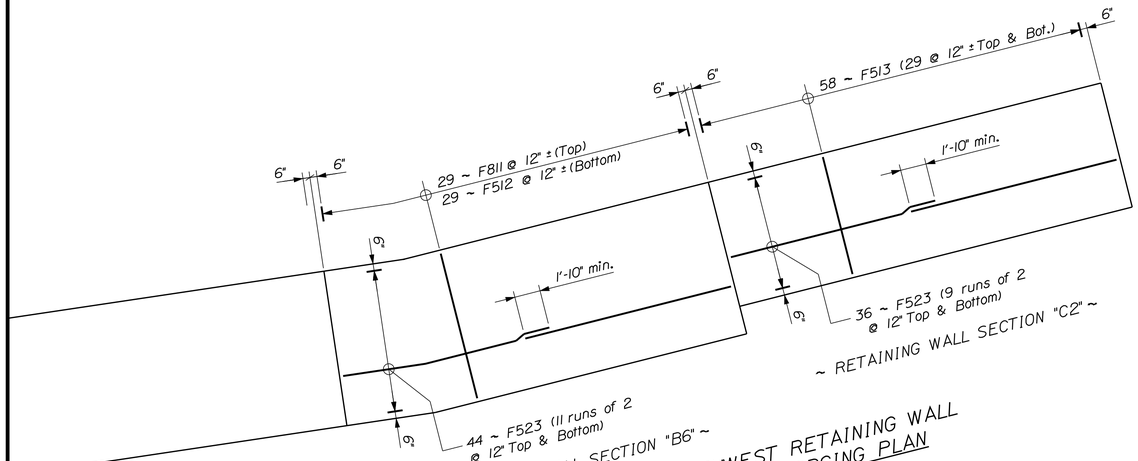

PART SOUTHWEST RETAINING WALL
FOOTING REINFORCING PLAN

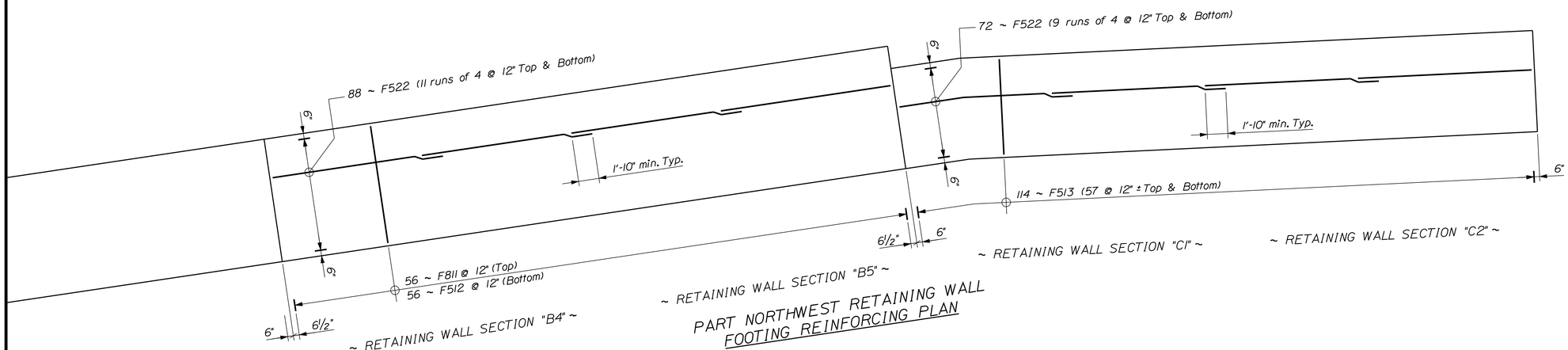

PART NORTHWEST RETAINING WALL
FOOTING REINFORCING PLAN

STATE OF MAINE
DEPARTMENT OF TRANSPORTATION

BH-A106(000)

PIN 11060.00

BRIDGE NO. 2047

BRIDGE PLANS

PROJ. MANAGER	J. Wentworth	BY	DATE
DESIGN-DETAILED	J. Folsom	D. Domren	July 2010
CHECKED-REVIEWED	------	------	------
DESIGN2-DETAILED2	------	--	------
DESIGN3-DETAILED3	------	----------	------
REVISIONS 1	------	------	------
REVISIONS 2	------	------	------
REVISIONS 3	------	------	------
REVISIONS 4	------	------	------
FIELD CHANGES	------	------	------

SIGNATURE

P.E. NUMBER

DATE

NAPLES BAY BRIDGE
CHUTES RIVER
NAPLES CUMBERLAND COUNTY

RET. WALL FTG. REINF. PLAN

SHEET NUMBER

106

OF 160

Filename: ...\107_Retaining Wall Reinforcing Elevations.dgn Design: BRIDGE Username: dana.damren Date:7/20/2010

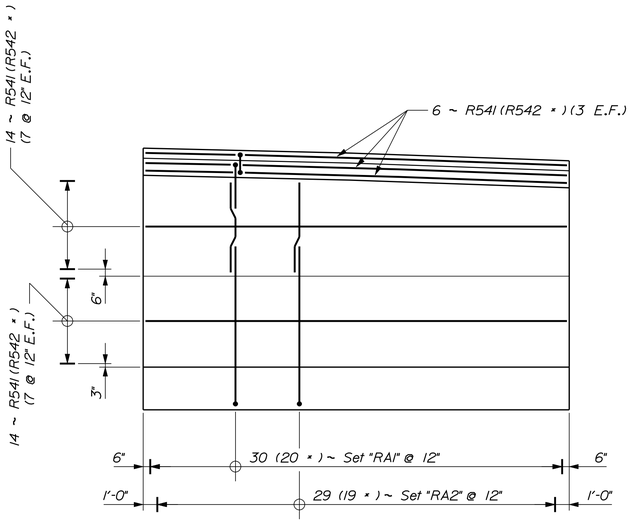

RETAINING WALL SECTION "A"
REINFORCING ELEVATION
4 ~ Section "A" Walls @ 30'-0"
(XX ×) Bars for Northeast Section "A" Wall only

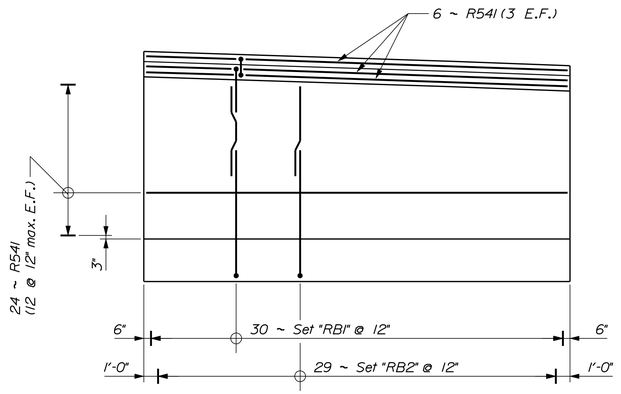

RETAINING WALL SECTION "B1"
REINFORCING ELEVATION
1 ~ Section "B1" Wall @ 30'-0"

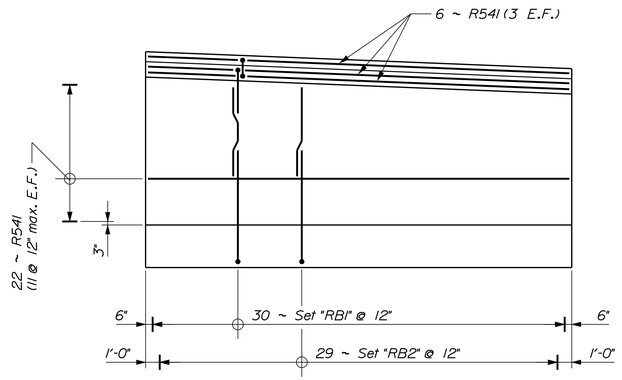

RETAINING WALL SECTION "B2"
REINFORCING ELEVATION
2 ~ Section "B2" Walls @ 30'-0"

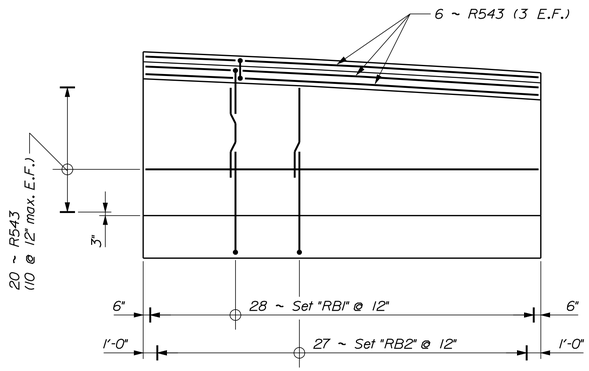

RETAINING WALL SECTION "B3"
REINFORCING ELEVATION
1 ~ Section "B3" Wall @ 28'-0"

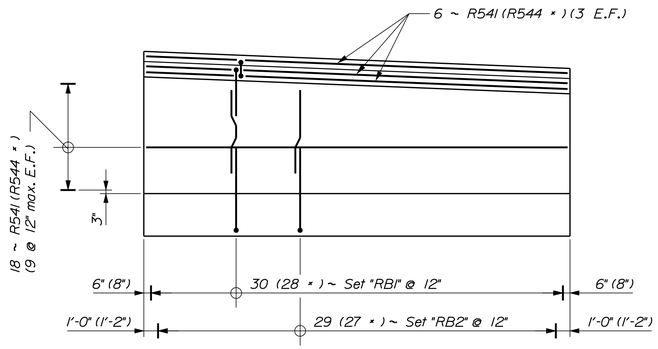

RETAINING WALL SECTION "B4"
REINFORCING ELEVATION
1 ~ Section "B4" Wall @ 30'-0" & 1 ~ Section "B4" Wall @ 28'-4"
Bars (XX ×) & dimensions (6") for Southwest Section "B4" Wall

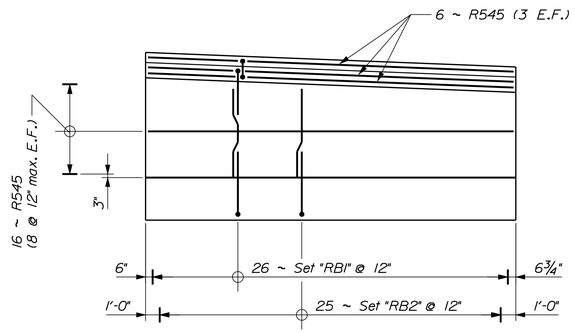

RETAINING WALL SECTION "B5"
REINFORCING ELEVATION
1 ~ Section "B5" Wall @ 26'-0¾"

STATE OF MAINE
DEPARTMENT OF TRANSPORTATION

BH-A106(000)

PIN 11060.00

BRIDGE NO. 2047

BRIDGE PLANS

PROJ. MANAGER	J. Wentworth	BY	DATE
DESIGN-DETAILED	J. Folsom	D. Damren	July 2010
CHECKED-REVIEWED	-----	-----	-----
DESIGN2-DETAILED2	-----	-----	-----
DESIGN3-DETAILED3	-----	-----	-----
REVISIONS 1	-----	-----	-----
REVISIONS 2	-----	-----	-----
REVISIONS 3	-----	-----	-----
REVISIONS 4	-----	-----	-----
FIELD CHANGES	-----	-----	-----

SIGNATURE

P.E. NUMBER

DATE

NAPLES BAY BRIDGE
CHUTES RIVER
CUMBERLAND COUNTY
NAPLES

RET. WALL REINF. ELEVATIONS

SHEET NUMBER

107

OF 160

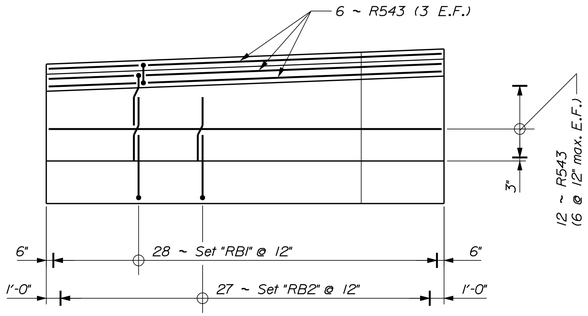

RETAINING WALL SECTION "B6"
REINFORCING ELEVATION
1 ~ Section "B6" Wall @ 28'-0"

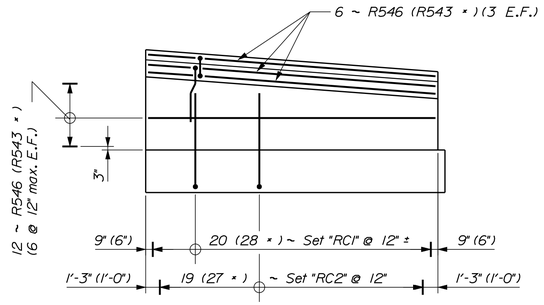

RETAINING WALL SECTION "C1"
REINFORCING ELEVATION
1 ~ Section "C1" Wall @ 20'-6" & 1 ~ Section "C1" Wall @ 28'-0"
(XX +) Bars for 28'-0" Wall

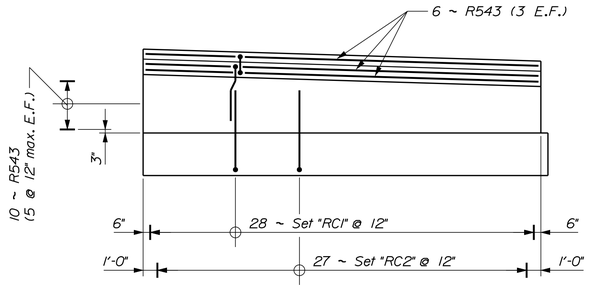

RETAINING WALL SECTION "C2"
REINFORCING ELEVATION
2 ~ Section "C2" Walls @ 28'-0"

STATE OF MAINE
DEPARTMENT OF TRANSPORTATION

BH-A106(000)

PIN 11060.00

BRIDGE NO. 2047

BRIDGE PLANS

PROJ. MANAGER	J. Wentworth	BY	DATE
DESIGN-DETAILED	J. Folsom	D. Domren	July 2010
CHECKED-REVIEWED	------	------	------
DESIGN2-DETAILED2	------	------	------
DESIGN3-DETAILED3	------	------	------
REVISIONS 1	------	------	------
REVISIONS 2	------	------	------
REVISIONS 3	------	------	------
REVISIONS 4	------	------	------
FIELD CHANGES	------	------	------

SIGNATURE

P.E. NUMBER

DATE

NAPLES BAY BRIDGE
CHUTES RIVER
NAPLES CUMBERLAND COUNTY

RET. WALL REINF. ELEVATIONS

SHEET NUMBER

108

OF 160

Filename: ...\108_Retaining Wall Reinforcing Elevations.dgn Design: BRIDGE Username: dona.domren Date:7/20/2010

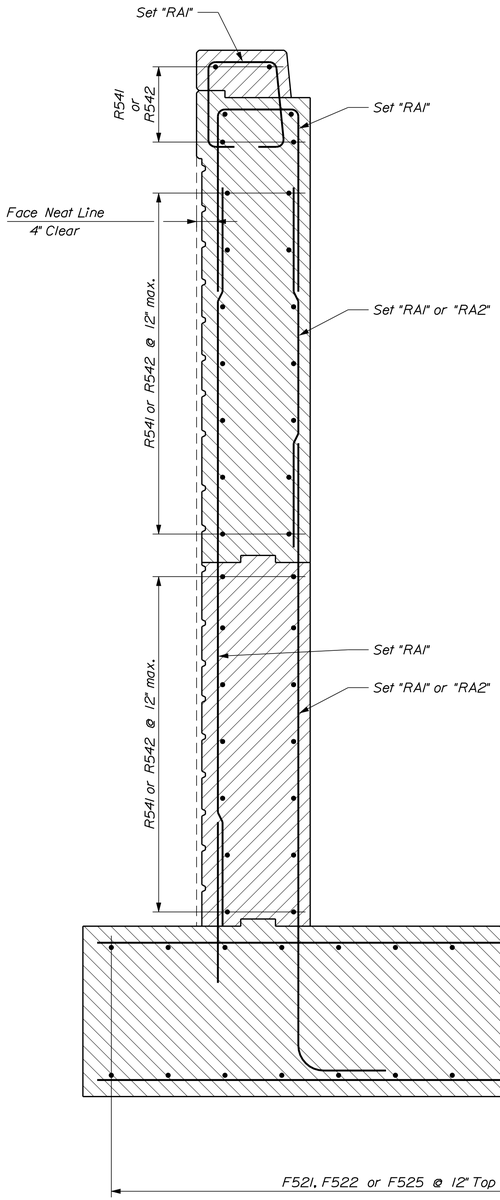

RETAINING WALL REINFORCING SECTION "A"

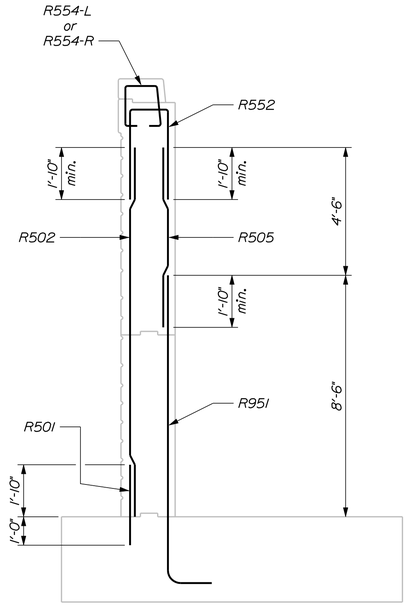

REINFORCING SET "RA1"

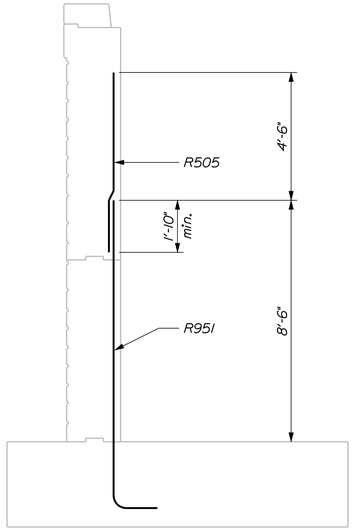

REINFORCING SET "RA2"

Filename: ...\109_Retaining Wall Reinforcing Sections.dgn Username: dana.damren Date:7/20/2010

Division: BRIDGE

STATE OF MAINE
DEPARTMENT OF TRANSPORTATION

BH-A106(000)

PIN 11060.00

BRIDGE NO. 2047

BRIDGE PLANS

PROJ. MANAGER	J. Wentworth	
DESIGN-DETAILED	J. Folsom	July 2010
CHECKED-REVIEWED		
DESIGN2-DETAILED2		
DESIGN3-DETAILED3		
REVISIONS 1		
REVISIONS 2		
REVISIONS 3		
REVISIONS 4		
FIELD CHANGES		

SIGNATURE

P.E. NUMBER

DATE

NAPLES BAY BRIDGE
CHUTES RIVER
NAPLES CUMBERLAND COUNTY

RETAINING WALL SECTIONS

SHEET NUMBER

109

OF 160

SET SCHEDULE			
Retaining Wall	Bar Designation	Bar Designation	Dimension "B"
B1	R503-01	R952-01	6'-3"
B2	R503-02	R952-02	5'-3"
B3	R503-03	R952-03	4'-6"
B4	R504-04	R952-04	3'-3"
B5	R505-05	R952-05	2'-0"
B6	R506-05	R952-05	2'-0"

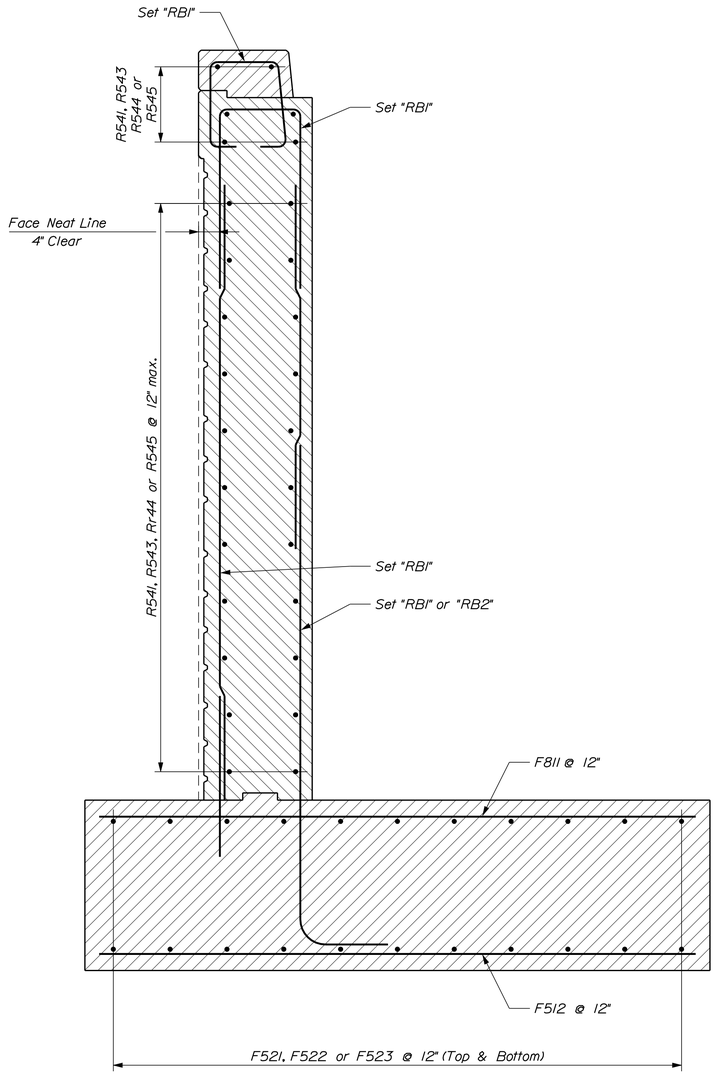

RETAINING WALL REINFORCING SECTION "B"

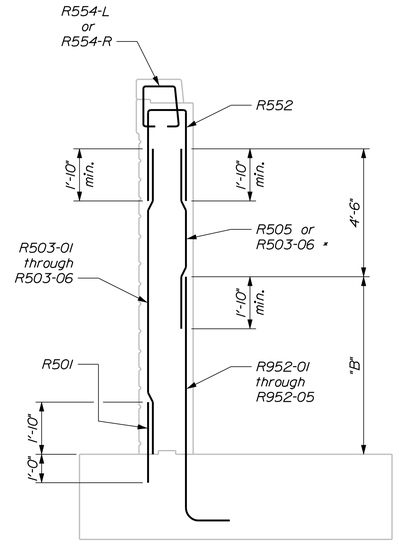

REINFORCING SET RB1"
* B6 Wall only

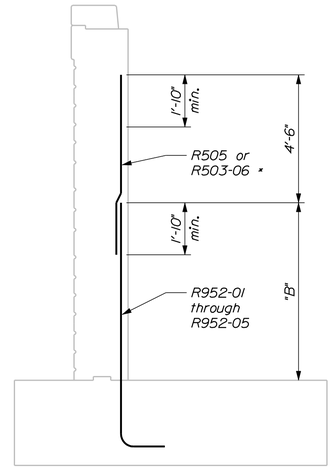

REINFORCING SET "RB2"
* B6 Wall only

STATE OF MAINE
DEPARTMENT OF TRANSPORTATION

BH-A106(000)

PIN 11060.00

BRIDGE NO. 2047

BRIDGE PLANS

	BY	DATE
PROJ. MANAGER	J. Wentworth	
DESIGN-DETAILED	D. Domren	July 2010
CHECKED-REVIEWED	J. Folsom	-----
DESIGN2-DETAILED2	-----	-----
DESIGN3-DETAILED3	-----	-----
REVISIONS 1	-----	-----
REVISIONS 2	-----	-----
REVISIONS 3	-----	-----
REVISIONS 4	-----	-----
FIELD CHANGES	-----	-----

SIGNATURE

P.E. NUMBER

DATE

NAPLES BAY BRIDGE
CHUTES RIVER
NAPLES CUMBERLAND COUNTY

RETAINING WALL SECTIONS

SHEET NUMBER

110

OF 160

Filename: ...\110_Retaining Wall Reinforcing Sections.dgn Division: BRIDGE Username: dana.domren Date:7/20/2010

Username: dana.damren Date:7/20/2010
Filename: ...\111_Retaining Wall Reinforcing Sections.dgn Division: BRIDGE

SET SCHEDULE			
Retaining Wall	Bar Designation	Bar Designation	Dimension "C"
C1	R504-01	R551-01	3'-9"
C2	R504-02	R551-02	2'-9"

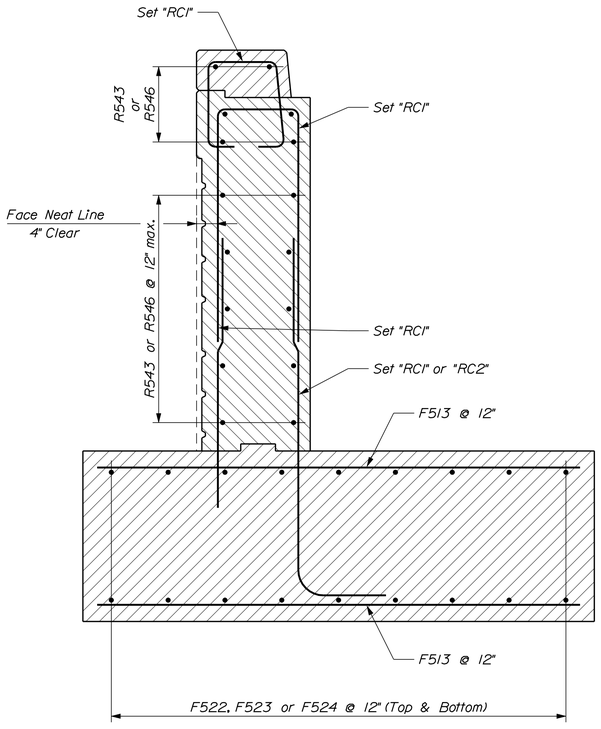

RETAINING WALL REINFORCING SECTION "C"

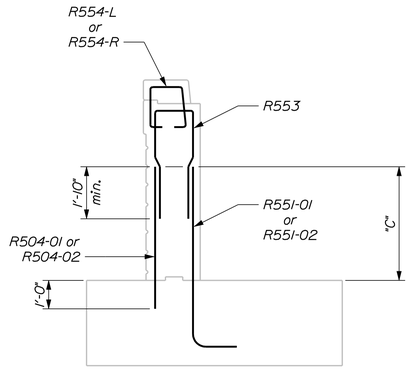

REINFORCING SET "RC1"

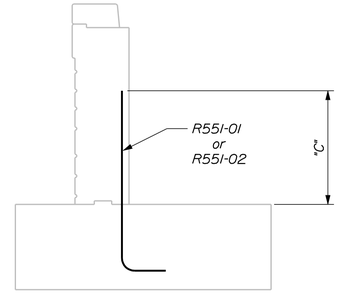

REINFORCING SET "RC2"

STATE OF MAINE
DEPARTMENT OF TRANSPORTATION

BH-A106(000)

PIN 11060.00

BRIDGE NO. 2047

BRIDGE PLANS

PROJ. MANAGER	J. Wentworth		
DESIGN-DETAILED	J. Folsom	D. Damren	July 2010
CHECKED-REVIEWED	-----	-----	-----
DESIGN2-DETAILED2	-----	-----	-----
DESIGN3-DETAILED3	-----	-----	-----
REVISIONS 1	-----	-----	-----
REVISIONS 2	-----	-----	-----
REVISIONS 3	-----	-----	-----
REVISIONS 4	-----	-----	-----
FIELD CHANGES	-----	-----	-----

SIGNATURE

P.E. NUMBER

DATE

NAPLES BAY BRIDGE
CHUTES RIVER
NAPLES CUMBERLAND COUNTY

RETAINING WALL SECTIONS

SHEET NUMBER

111

OF 160

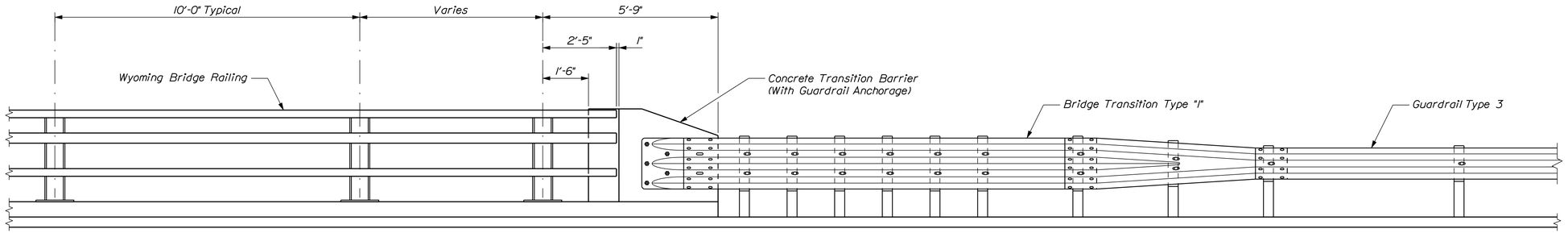

BRIDGE RAILING TRANSITION ELEVATION

Northeast Retaining Wall only

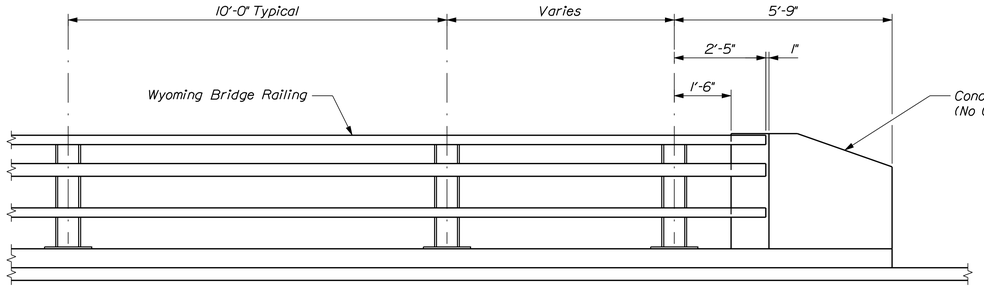

BRIDGE RAILING ELEVATION

Typical except at Northeast Retaining Wall

REINFORCING STEEL SCHEDULE

Mark	Qty.	Length
TB551	4	5'-10"
TB552	9	6'-6"
TB553	3	5'-5"
TB554	5	11'-4"
TB561	1	2'-0"
TB562	1	3'-0"
TB563	1	4'-0"

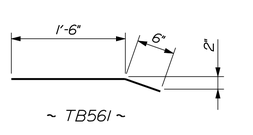

~ TB561 ~

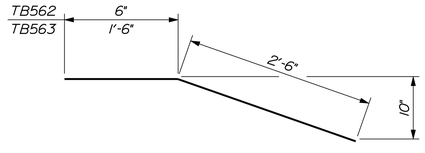

~ TB562 & TB563 ~

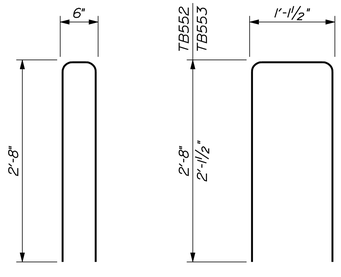

~ TB551 ~

~ TB552 & TB553 ~

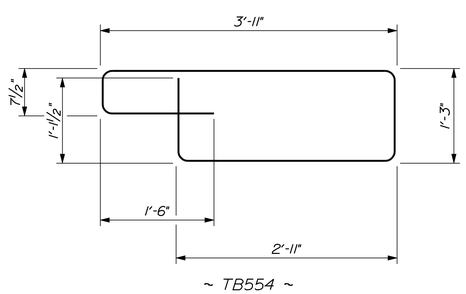

~ TB554 ~

TRANSITION BARRIER NOTES

1. All work and materials shall conform to the requirements of Special Provision, Section 526, Concrete Barrier (Permanent Concrete Barrier).

2. Reinforcing steel shall have a minimum concrete coverof 2 inches.

3. The quantities of reinforcing bars shown are for one transition barrier only.

4. Payment for the guardrail anchorage will be considered incidental to the transition barrier pay item.

5. After installation of the guardrail is complete, upset the threads on the anchor bolts in 3 places around each bolt, at the junction of the nut and the exposed thread, with a center punch or similar tool. Payment for nuts will be considered incidental to the guardrail pay times.

MATERIALS

Concrete . . . . . Class "LP"
Reinforcing steel . . . . . ASTM A 615/A 615M, Grade 420
Spacer plate . . . . . ASTM A 709/A 709 M, Grade 250
Anchor bolts . . . . . ASTM A 325M, Type 1

STATE OF MAINE
DEPARTMENT OF TRANSPORTATION

BH-A106(000)

PIN 11060.00

BRIDGE NO. 2047

BRIDGE PLANS

PROJ. MANAGER	J. Wentworth	BY	DATE
DESIGN-DETAILED	J. Folsom	D. Domren	July 2010
CHECKED-REVIEWED	------	------	------
DESIGN2-DETAILED2	------	------	------
DESIGN3-DETAILED3	------	------	------
REVISIONS 1	------	------	------
REVISIONS 2	------	------	------
REVISIONS 3	------	------	------
REVISIONS 4	------	------	------
FIELD CHANGES	------	------	------

SIGNATURE

P.E. NUMBER

DATE

NAPLES BAY BRIDGE
CHUTES RIVER
NAPLES CUMBERLAND COUNTY

TRANSITION BARRIERS

SHEET NUMBER

112

OF 160

Filename: ...\112_Transition Barriers.dgn Division: BRIDGE Username: dona.domren Date:7/20/2010

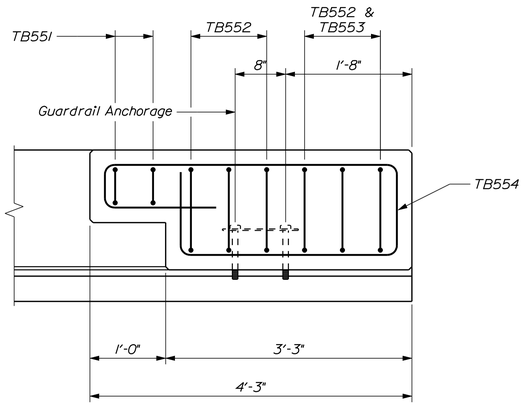

TRANSITION BARRIER PLAN

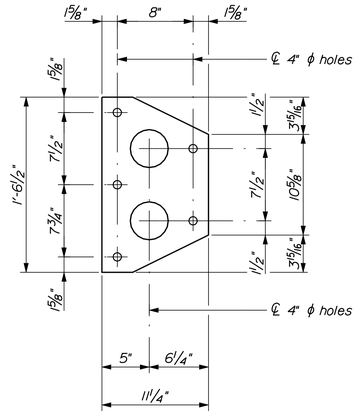

GUARDRAIL ANCHORAGE

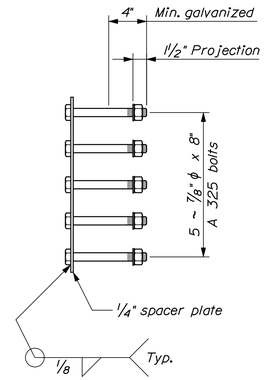

ANCHORAGE SECTION

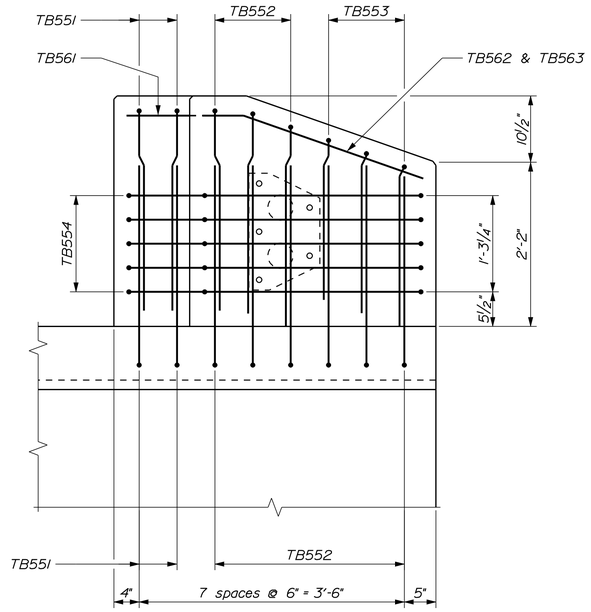

TRANSITION BARRIER ELEVATION

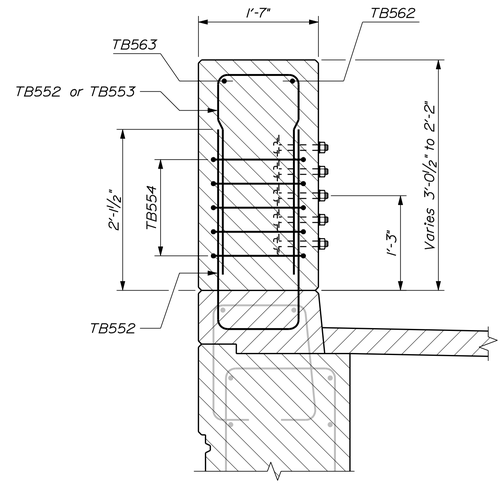

TYPICAL TRANSITION BARRIER SECTION

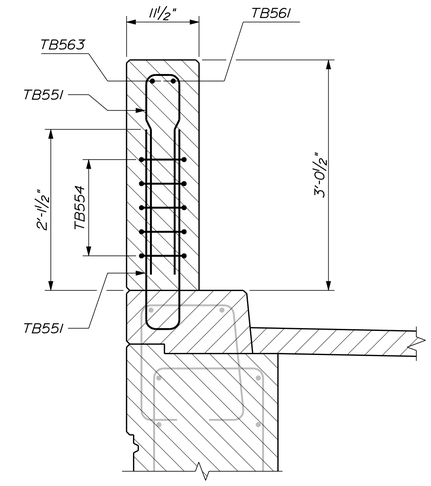

BARRIER SECTION AT RAIL RECESS

STATE OF MAINE
DEPARTMENT OF TRANSPORTATION

BH-A106(000)

PIN 11060.00

BRIDGE NO. 2047

BRIDGE PLANS

	BY	DATE
PROJ. MANAGER	J. Wentworth	
DESIGN-DETAILED	D. Domren	July 2010
CHECKED-REVIEWED	J. Folsom	-----
DESIGN2-DETAILED2	-----	-----
DESIGN3-DETAILED3	-----	-----
REVISIONS 1	-----	-----
REVISIONS 2	-----	-----
REVISIONS 3	-----	-----
REVISIONS 4	-----	-----
FIELD CHANGES	-----	-----

SIGNATURE

P.E. NUMBER

DATE

NAPLES BAY BRIDGE
CHUTES RIVER
NAPLES CUMBERLAND COUNTY

TRANSITION BARRIERS

SHEET NUMBER

113

OF 160

Filename: ...\113_Transition Barriers.dgn Division: BRIDGE Username: dona.domren Date:7/20/2010

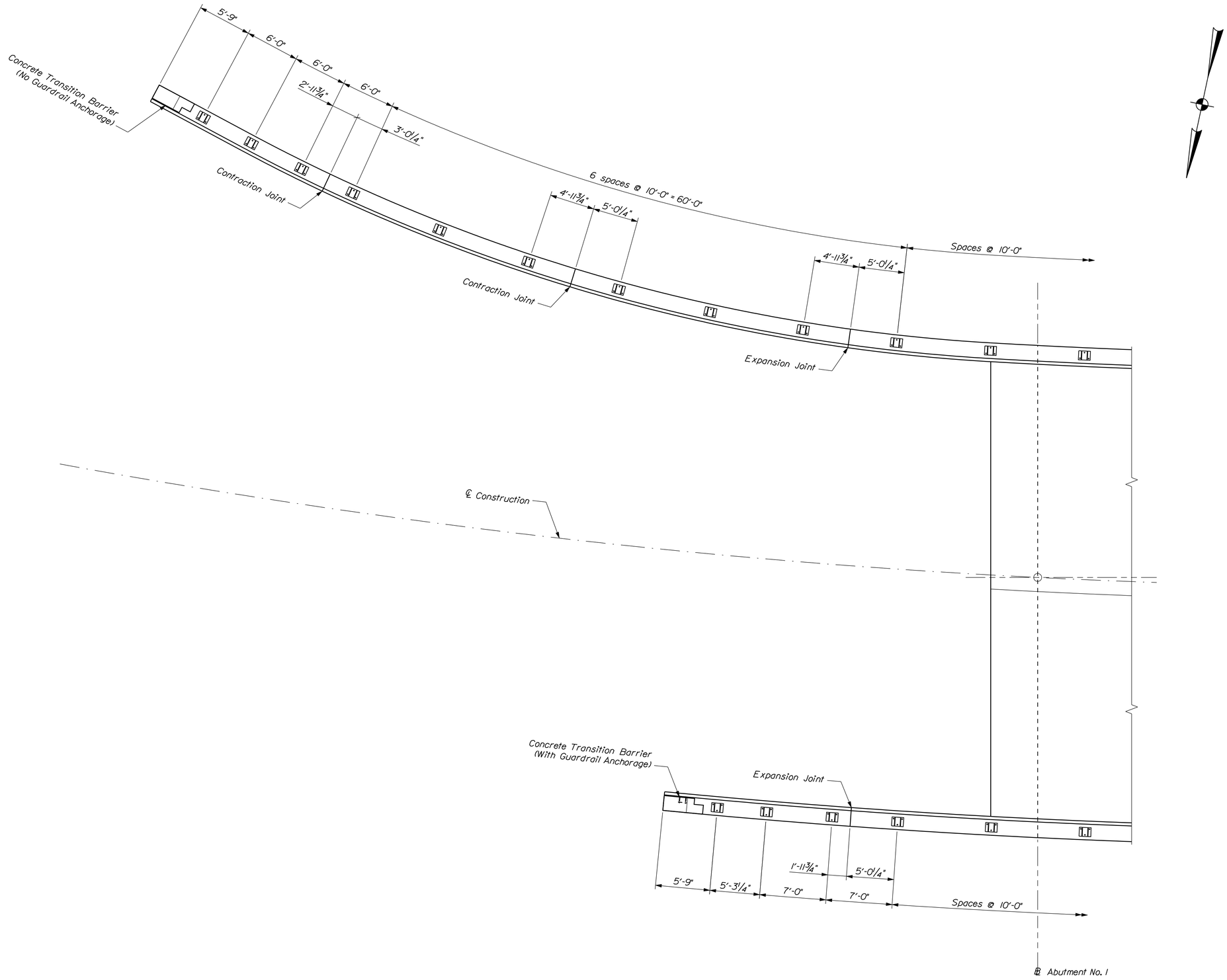

BRIDGE RAILING LAYOUT PLAN

STATE OF MAINE
DEPARTMENT OF TRANSPORTATION

BH-A106(000)

PIN 11060.00

BRIDGE NO. 2047

BRIDGE PLANS

	BY	DATE
PROJ. MANAGER	J. Wentworth	
DESIGN-DETAILED	D. Domren	July 2010
CHECKED-REVIEWED	J. Folsom	------
DESIGN2-DETAILED2	-----	------
DESIGN3-DETAILED3	-----	------
REVISIONS 1	-----	------
REVISIONS 2	-----	------
REVISIONS 3	-----	------
REVISIONS 4	-----	------
FIELD CHANGES	-----	------

SIGNATURE

P.E. NUMBER

DATE

NAPLES BAY BRIDGE
CHUTES RIVER
NAPLES CUMBERLAND COUNTY

BRIDGE RAILING LAYOUT PLAN

SHEET NUMBER

114

OF 160

Filename: ...\bridge\rnsto\114_Rail_Plan.dgn Division: BRIDGE Username: dona.domren Date:7/20/2010

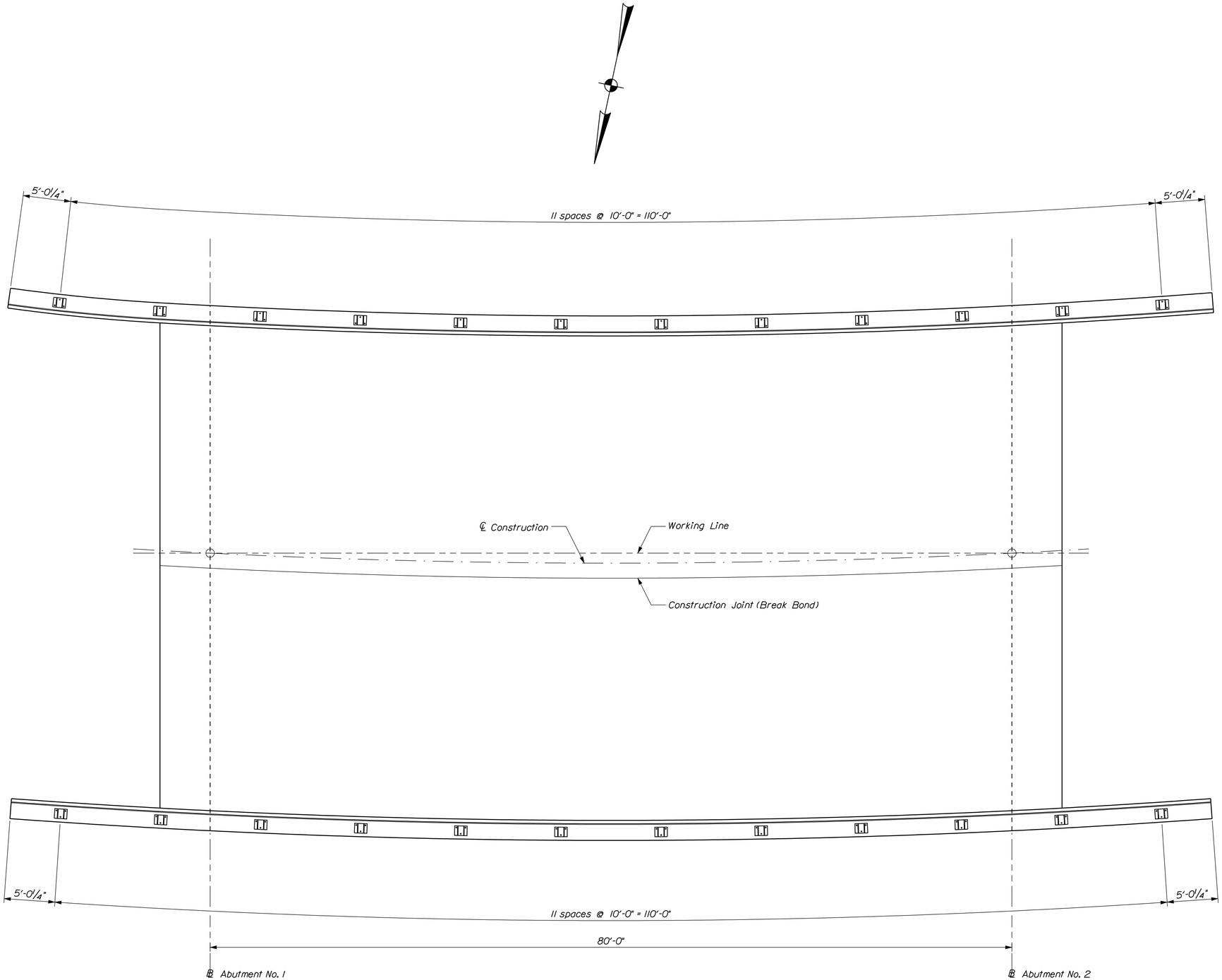

BRIDGE RAILING LAYOUT PLAN

STATE OF MAINE
DEPARTMENT OF TRANSPORTATION

BH-A106(000)

PIN **11060.00**

BRIDGE NO. 2047 — BRIDGE PLANS

	BY	DATE
PROJ. MANAGER	J. Wentworth	
DESIGN-DETAILED	D. Domren	July 2010
CHECKED-REVIEWED	J. Folsom	------
DESIGN2-DETAILED2	-----	------
DESIGN3-DETAILED3	-----	------
REVISIONS 1	-----	------
REVISIONS 2	-----	------
REVISIONS 3	-----	------
REVISIONS 4	-----	------
FIELD CHANGES	-----	------

SIGNATURE

P.E. NUMBER

DATE

NAPLES BAY BRIDGE
CHUTES RIVER
NAPLES — CUMBERLAND COUNTY

BRIDGE RAILING LAYOUT PLAN

SHEET NUMBER

115

OF 160

Filename: ...\bridge\rnsto\115_Rail_Plan.dgn Division: BRIDGE Username: dona.domren Date:7/20/2010

Filename: ...\bridge\vmsto\116_Roil_Plan.dgn Division: BRIDGE Username: dana.damren Date:7/20/2010

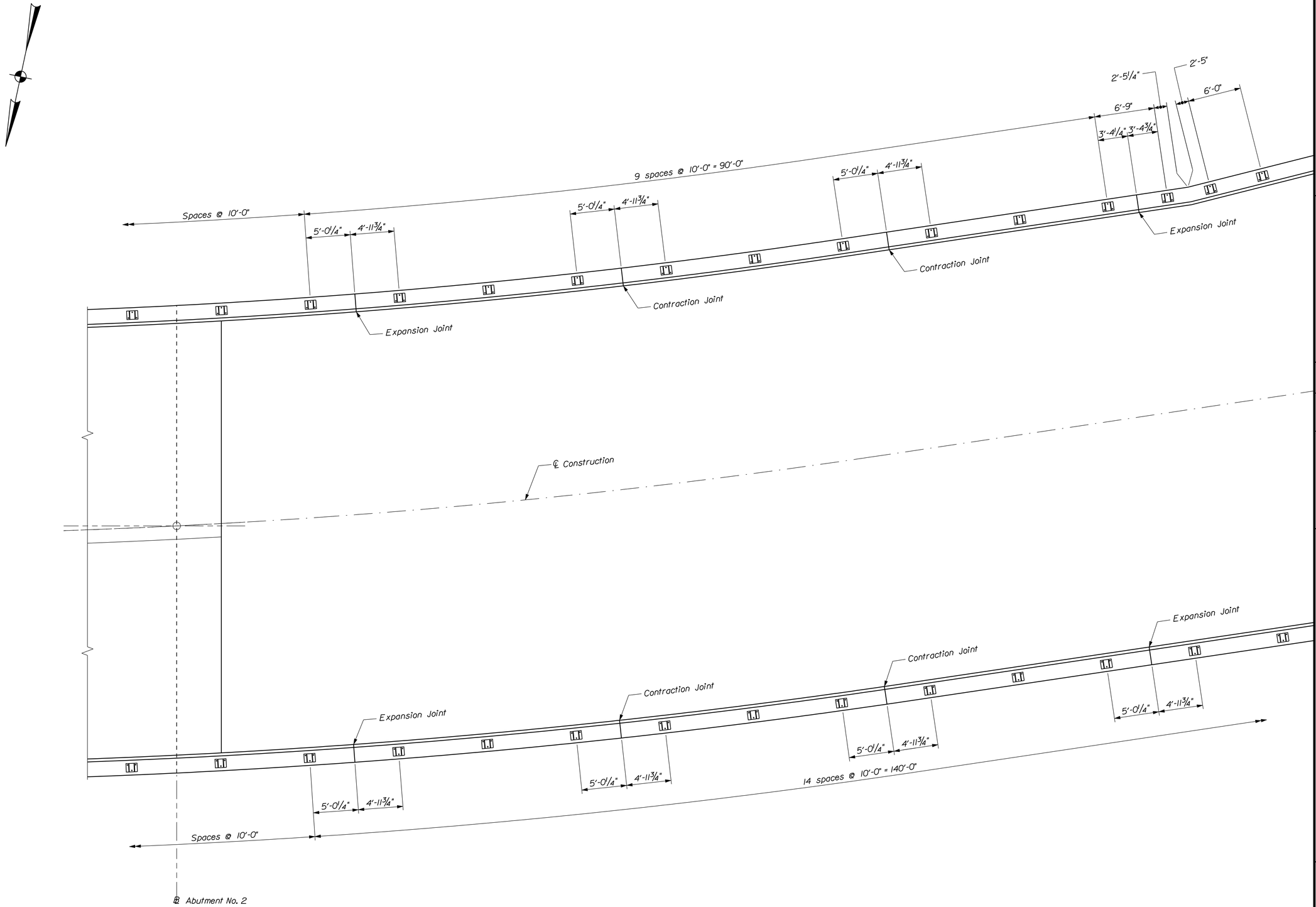

BRIDGE RAILING LAYOUT PLAN

STATE OF MAINE
DEPARTMENT OF TRANSPORTATION

BH-A106(000)

PIN 11060.00

BRIDGE NO. 2047

BRIDGE PLANS

PROJ. MANAGER	J. Wentworth	BY	DATE
DESIGN-DETAILED	J. Folsom	D. Damren	July 2010
CHECKED-REVIEWED	------	------	------
DESIGN2-DETAILED2	------	------	------
DESIGN3-DETAILED3	------	------	------
REVISIONS 1	------	------	------
REVISIONS 2	------	------	------
REVISIONS 3	------	------	------
REVISIONS 4	------	------	------
FIELD CHANGES	------	------	------

SIGNATURE

P.E. NUMBER

DATE

NAPLES BAY BRIDGE
CHUTES RIVER
NAPLES CUMBERLAND COUNTY

SHEET NUMBER

116

OF 160

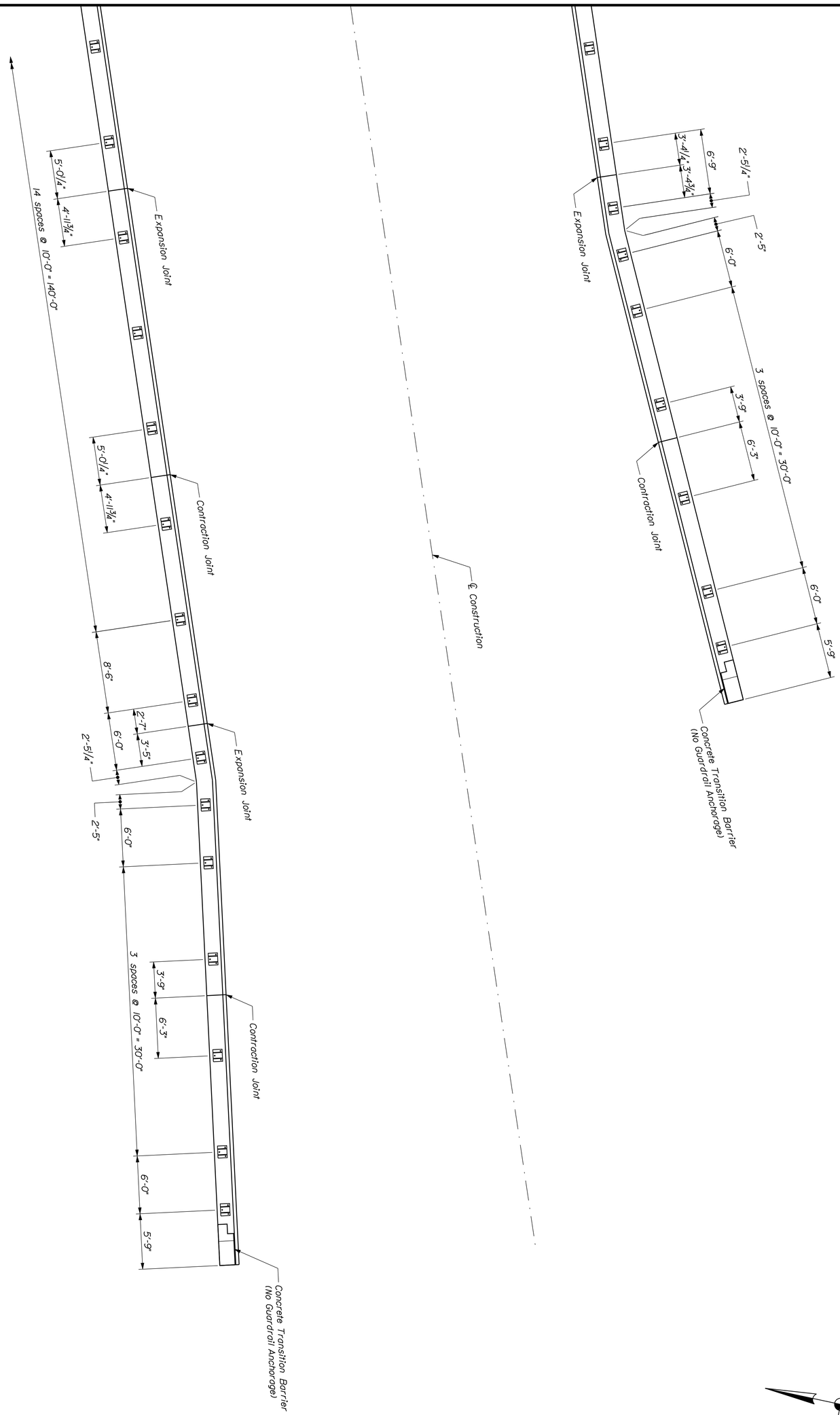

BRIDGE RAILING LAYOUT PLAN

NAPLES BAY BRIDGE
CHUTES RIVER
NAPLES CUMBERLAND COUNTY

BRIDGE RAILING LAYOUT PLAN

		BY	DATE
PROJ. MANAGER	J. Wentworth		
DESIGN-DETAILED	J. Folsom	D. Damren	July 2010
CHECKED-REVIEWED	_____	_____	_____
DESIGN2-DETAILED2	_____	__	_____
DESIGN3-DETAILED3	_____	_____	_____
REVISIONS 1	_____		_____
REVISIONS 2	_____		_____
REVISIONS 3	_____		_____
REVISIONS 4	_____		_____
FIELD CHANGES	_____		_____

SIGNATURE

P.E. NUMBER

DATE

STATE OF MAINE
DEPARTMENT OF TRANSPORTATION

BH-A106(000)

PIN 11060.00

BRIDGE NO. 2047

BRIDGE PLANS

SHEET NUMBER 117 OF 160

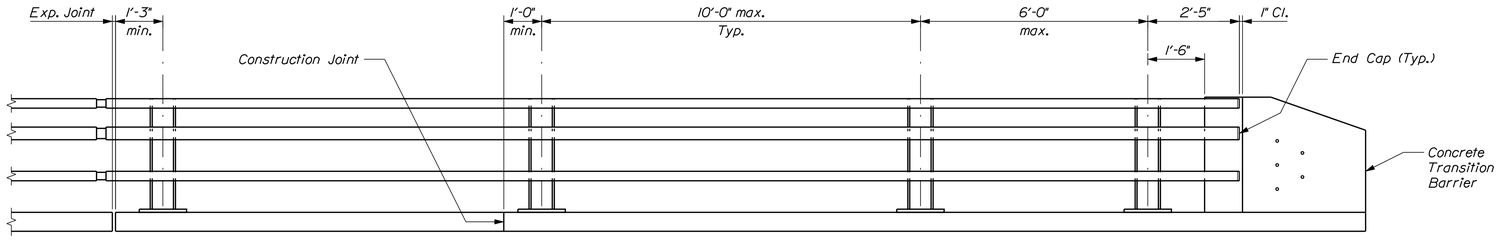

WYOMING BRIDGE RAILING ELEVATION

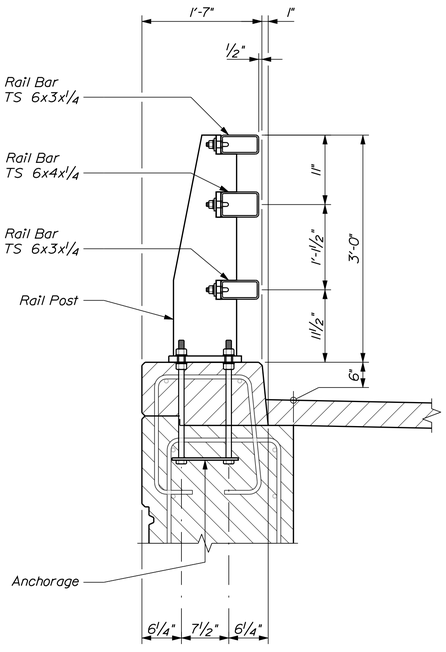

TYPICAL RAILING SECTION
Pale Panel not shown

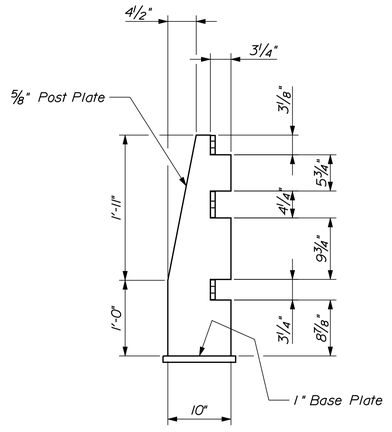

RAIL POST SIDE ELEVATION

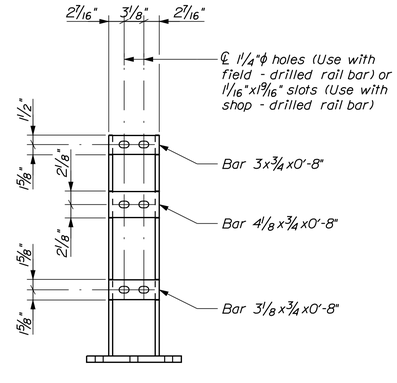

RAIL POST FRONT ELEVATION

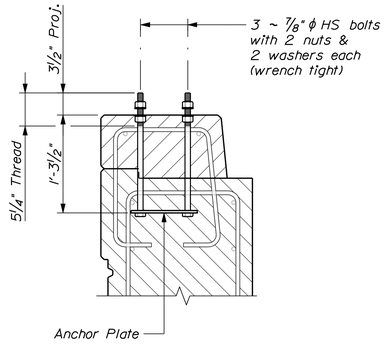

ANCHORAGE DETAIL

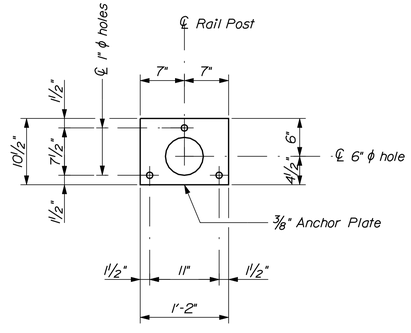

ANCHOR PLATE PLAN

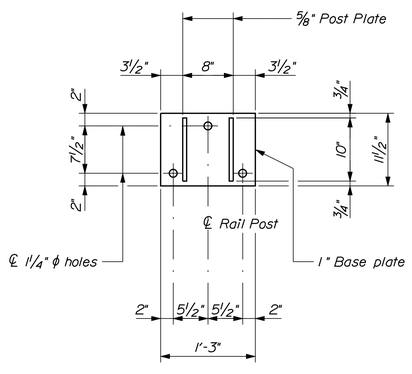

RAIL POST PLAN

BRIDGE RAILING NOTES

1. All work and materials shall conform to the provisions of Section 507 - Railings of the Standard Specifications.

2. Tubing shall meet the longitudinal CVN requirements of 15 ft. lb. at 0 °F. or proportional values of sub - size specimens. Testing shall be done in accordance with ASTM A 673. The "H" frequency shall be used and the material shall be as - rolled.

3. Twenty - five percent of the post - to - base welds in a production lot shall be tested by the Magnetic Particle Method. If rejectable discontinuities are found, another twenty - five percent of that production lot shall be tested. If rejectable discontinuities are found in the second twenty - five percent, all post - to - base welds in that lot shall be tested. Acceptance criteria shall be in accordance with the latest edition of the AWS D1.5 Bridge Welding Code.

4. All exposed cut or sheared edges shall be broken and free of burrs.

5. Rail posts shall be set normal to grade unless otherwise shown.

6. Post base plates shall be flat after fabrication.

7. Lengths of rail bar shall be attached to a minimum of 2 rail posts and to at least 4 posts whenever possible.

8. Rail bars shall not be shop spliced.

9. Rail bar expansion joints shall be provided in any bay spanning a super-structure expansion joint. Expansion joint width shall be one inch at 45 °F.

10. All parts except the post anchorage, the reinforcement assembly and the anchor plate shall be galvanized after fabrication in accordance with ASTM A 123, except that hardware shall meet the requirements of either ASTM A 153 or ASTM B 695, Class 50, Type 1. Parts except hardware to be galvanized shall be blast cleaned prior to galvanizing in accordance with SSPC - SP6.

11. Venting and pick - up holes shall be shown on the shop drawings.

12. Anchor bolts may be tack welded to anchorage.

13. Rail posts shall be in place and in proper alignment prior to placing the curb concrete.

14. After installation of the rail bars, the exposed rail bolt threads shall receive two coats of zinc - rich paint.

MATERIALS

Rail Bars	ASTM A 500, Grade B
Rail Post Plates & Bases	ASTM A 572, Grade 50
Rail Bar Splice Sleeves	ASTM A 572, Grade 50
Anchor & Reinforcement Assemblies	ASTM A 36
Plate Washers	ASTM A 36
Anchor Bolts	ASTM A 325, ASTM A 449, or ASTM F 1554, Grade 105
Rail Bolts	ASTM A 36
Nuts for Rail Bolts	ASTM A 563
Splice Bolts	ASTM A 325
Lock Washers	ANSI/ASME B18.21.1-1994

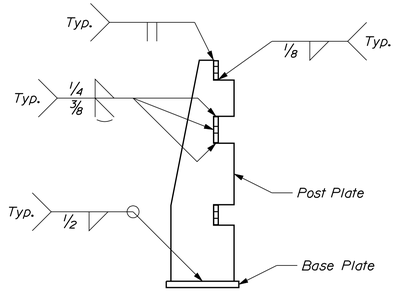

RAIL POST WELD DETAIL

STATE OF MAINE
DEPARTMENT OF TRANSPORTATION

BH-A106(000)

PIN 11060.00

BRIDGE NO. 2047

BRIDGE PLANS

		BY	DATE
PROJ. MANAGER	J. Wentworth		
DESIGN-DETAILED	J. Folsom	D. Domren	July 2010
CHECKED-REVIEWED	WEG	-----	-----
DESIGN2-DETAILED2	ED2	-----	-----
DESIGN3-DETAILED3	ED3	--	-----
REVISIONS 1		-----	-----
REVISIONS 2		-----	-----
REVISIONS 3		-----	-----
REVISIONS 4		-----	-----
FIELD CHANGES		-----	-----

SIGNATURE

P.E. NUMBER

DATE

NAPLES BAY BRIDGE
CHUTES RIVER
NAPLES CUMBERLAND COUNTY

BRIDGE RAILING DETAILS

SHEET NUMBER

118

OF 160

Filename: ...\mst0\118_Rail_Details.dgn Division: BRIDGE Username: dana.damren Date:7/20/2010

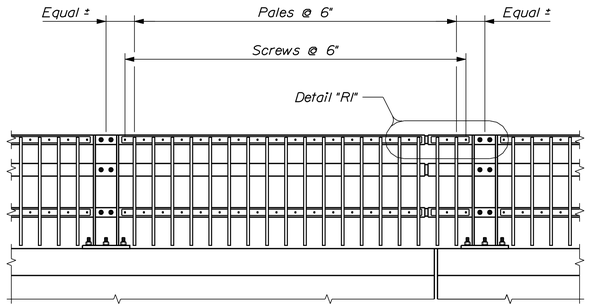

PALE PANEL REAR ELEVATION

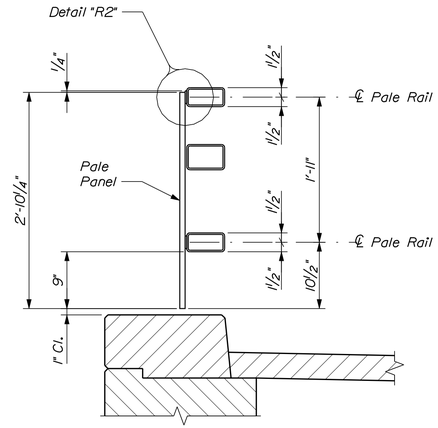

PALE PANEL SECTION

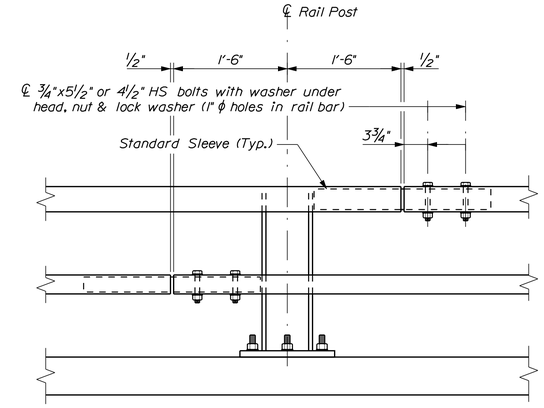

STANDARD SPLICE ELEVATION

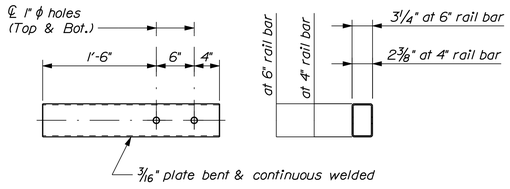

STANDARD SLEEVE DETAILS

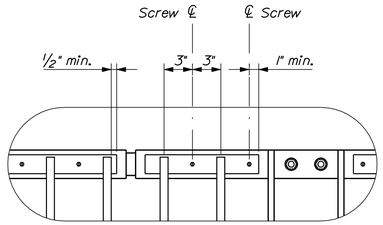

DETAIL "R1"

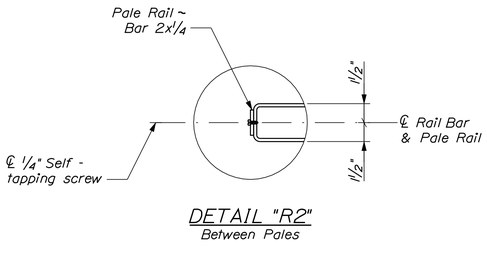

DETAIL "R2"
Between Pales

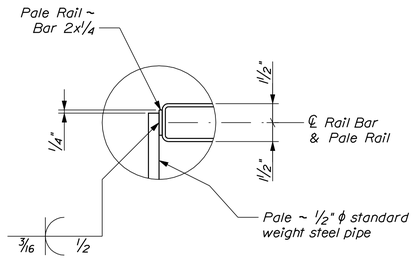

DETAIL "R2"
At Pale

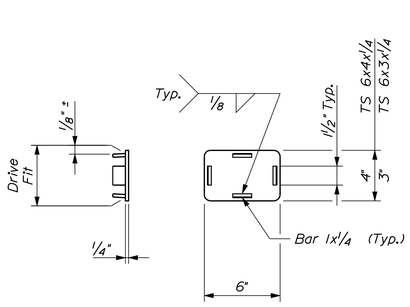

RAIL BAR END CAP

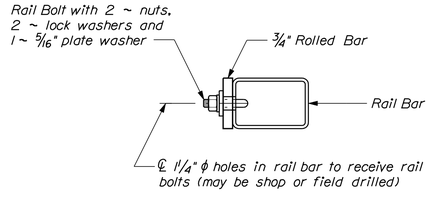

RAIL BAR CONNECTION DETAIL

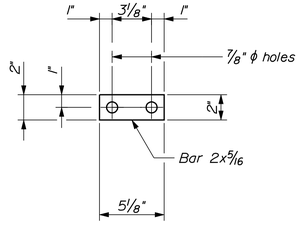

PLATE WASHER

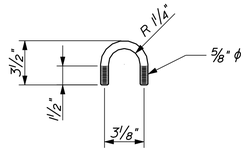

RAIL BOLT DETAIL

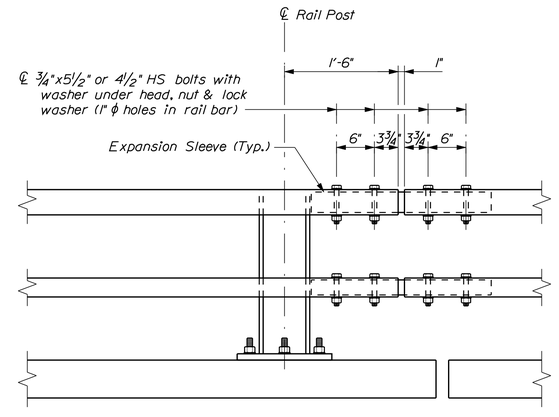

EXPANSION SPLICE ELEVATION

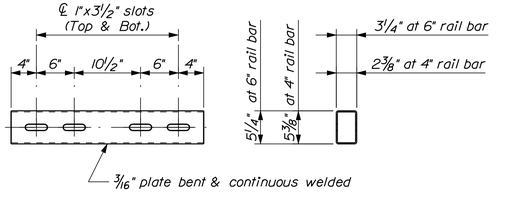

EXPANSION SLEEVE DETAILS

STATE OF MAINE
DEPARTMENT OF TRANSPORTATION

BH-A106(000)

PIN 11060.00

BRIDGE NO. 2047

BRIDGE PLANS

PROJ. MANAGER	J. Wentworth		
DESIGN-DETAILED	J. Folsom	BY	D. Domren
CHECKED-REVIEWED	-----	DATE	July 2010
DESIGN2-DETAILED2	-----	SIGNATURE	-----
DESIGN3-DETAILED3	-----	P.E. NUMBER	-----
REVISIONS 1	-----	DATE	-----
REVISIONS 2	-----		-----
REVISIONS 3	-----		-----
REVISIONS 4	-----		-----
FIELD CHANGES	-----		-----

NAPLES BAY BRIDGE
CHUTES RIVER
NAPLES CUMBERLAND COUNTY

BRIDGE RAILING DETAILS

SHEET NUMBER

119

OF 160

Filename: ...\msta\119_Rail_Details.dgn Division: BRIDGE Username: dana.domren Date:7/20/2010

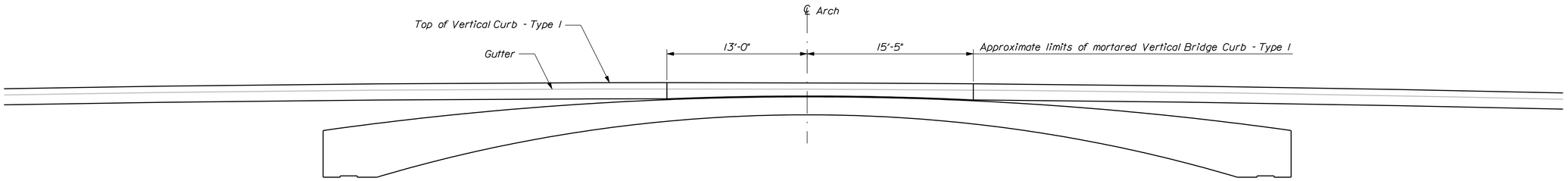

LEFT SIDE VERTICAL BRIDGE CURB - TYPE I

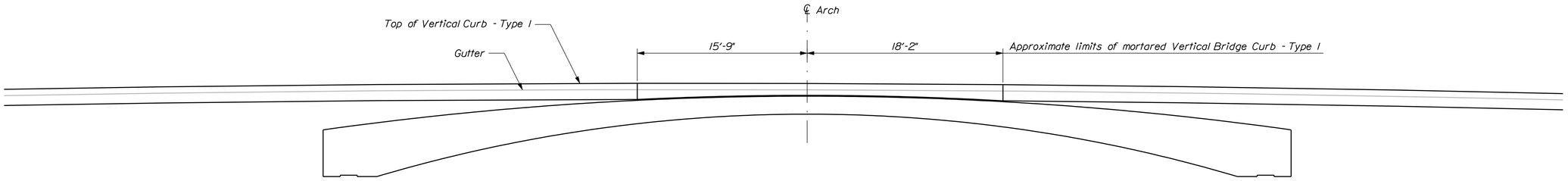

RIGHT SIDE VERTICAL BRIDGE CURB - TYPE I

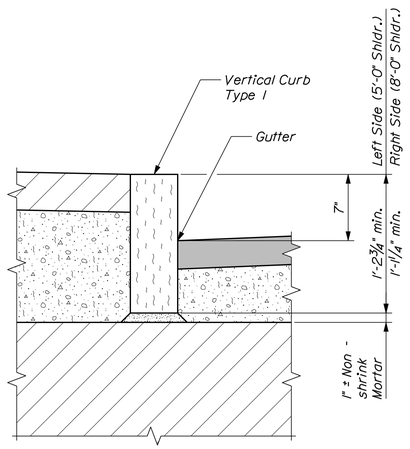

MORTARED VERTICAL CURB DETAIL

Filename: ...\120_Arch VerticalCurb Details.dgn Division: BRIDGE Username: dana.damren Date:7/20/2010

STATE OF MAINE
DEPARTMENT OF TRANSPORTATION

BH-A106(000)

PIN 11060.00

BRIDGE NO. 2047

BRIDGE PLANS

PROJ. MANAGER	J. Wentworth	BY	DATE
DESIGN-DETAILED	J. Folsom	D. Damren	July 2010
CHECKED-REVIEWED	-----	-----	-----
DESIGN2-DETAILED2	-----	--	-----
DESIGN3-DETAILED3	-----	----------	-----
REVISIONS 1	-----	-----	-----
REVISIONS 2	-----	-----	-----
REVISIONS 3	-----	-----	-----
REVISIONS 4	-----	-----	-----
FIELD CHANGES	-----	-----	-----

SIGNATURE

P.E. NUMBER

DATE

NAPLES BAY BRIDGE
CHUTES RIVER
NAPLES CUMBERLAND COUNTY

ARCH VERT. CURB DETAILS

SHEET NUMBER

120

OF 160

Filename: ...\00\bridge\msto\121_Rebar.dgn Division: BRIDGE
Username: dana.damren Date:7/20/2010

STRAIGHT BARS

MARK	QTY.	LENGTH	LOCATION
ARCH FOOTINGS			
F501	40	56'-0"	Horizontal - Bottom
F801	224	19'-6"	Horizontal - Top
F901	40	56'-0"	Horizontal - Top
F902	448	19'-6"	Horizontal - Bottom
ARCH & WINGWALLS			
A501	146	25'-9"	Sets "A3," "A4" & "A5"
A502	146	28'-0"	Sets "A3," "A4" & "A5"
A503	12	2'-10"	Set "A6"
A504	12	15'-6"	Set "A6"
A505	44	2'-10"	Set "WI"
A506	44	18'-3"	Set "WI"
A507	44	6'-6"	Set "WI"
A508	44	12'-9"	Set "W2"
A509	32	17'-9"	Set "W3"
A511	16	17'-9"	Sets "LI" & "L2"
A512	24	17'-9"	Set "LI"
A513	8	17'-9"	Set "L2"
A514	32	17'-9"	Arch Fascia
A515	160	17'-9"	Wingwalls - Longitudinal
A516	8	17'-9"	Wingwalls - Longitudinal
A517	8	17'-9"	Wingwalls - Longitudinal
A601	108	7'-0"	Set "AI"
A602	100	22'-6"	Set "A2"
A901	44	11'-6"	Set "WI"
A1001	54	50'-3"	Set "AI"
A1002	50	30'-0"	Set "A2"

MARK	QTY.	LENGTH	LOCATION
RETAINING WALL FOOTINGS			
F511	112	11'-6"	Ret. Wall "A" - Trans. - Bottom
F512	233	10'-6"	Ret. Wall "B" - Trans. - Bottom
F513	214	8'-6"	Ret. Wall "C" - Trans.- Top & Bot.
F521	136	16'-6"	Long.
F522	344	16'-0"	
F811	233	10'-6"	Ret. Wall "B" - Transverse - Top
F911	112	11'-6"	Ret. Wall "A" - Transverse - Top
RETAINING WALLS			
R501	340	2'-10"	Sets "RAI" & "RBI"
R502	110	13'-0"	Ret. Wall "A" - Set "RAI"
R503-01	30	10'-9"	Ret. Wall "BI" - Set "RBI"
R503-02	60	9'-9"	Ret. Wall "B2" - Set "RBI"
R503-03	28	9'-0"	Ret. Wall "B3" - Set "RBI"
R503-04	58	7'-9"	Ret. Wall "B4" - Set "RBI"
R503-05	26	6'-6"	Ret. Wall "B5" - Set "RBI"
R503-06	56	5'-6"	Ret. Wall "B6" - Set "RBI"
R504-01	48	4'-9"	Ret. Wall "CI" - Set "RCI"
R504-02	56	3'-9"	Ret. Wall "C2" - Set "RCI"
R505	613	6'-6"	Ret. Walls "AI" & "BI" - Set "RAI" & "RBI"
R541	212	29'-8"	Horiz. - 30' Retaining Walls
R542	34	19'-8"	Horiz. - 20' Retaining Wall
R543	94	27'-8"	Horiz. - 28' Retaining Walls
R544	24	28'-0"	Horiz. - 28'-4" Retaining Wall
R545	22	25'-8"	Horiz. - 20'-6¾" Retaining Wall
R546	18	20'-2"	Horiz. - 20'-6" Retaining Wall

BENT BARS

MARK	QTY.	LENGTH	TYPE	A	B	C	D	E	F	G	H	O	R	LOCATION
ARCH FOOTINGS														
F551	1520	5'-6"	S	0	0'-6"	4'-6"	0'-6"	--	--	0	--	--	--	Vertical Tie Bars
ARCH & WINGWALLS														
A551	864	5'-6"	C	0'-6"	4'-6"	0'-6"	--	--	--	--	0'-0½"	--	--	Set "A3" - Horizontal Tie Bars
A552-01	72	5'-7"	S	0	0'-6"	4'-7"	0'-6"	--	--	0	--	--	--	Set "A5" - Vertical Tie Bars
A552-02	72	5'-5"	S	0	0'-6"	4'-5"	0'-6"	--	--	0	--	--	--	Set "A5" - Vertical Tie Bars
A552-03	72	5'-3"	S	0	0'-6"	4'-3"	0'-6"	--	--	0	--	--	--	Set "A5" - Vertical Tie Bars
A552-04	72	5'-1"	S	0	0'-6"	4'-1"	0'-6"	--	--	0	--	--	--	Set "A5" - Vertical Tie Bars
A552-05	72	4'-11"	S	0	0'-6"	3'-11"	0'-6"	--	--	0	--	--	--	Set "A5" - Vertical Tie Bars
A552-06	72	4'-9"	S	0	0'-6"	3'-9"	0'-6"	--	--	0	--	--	--	Set "A5" - Vertical Tie Bars
A552-07	72	4'-7"	S	0	0'-6"	3'-7"	0'-6"	--	--	0	--	--	--	Set "A5" - Vertical Tie Bars
A552-08	72	4'-6"	S	0	0'-6"	3'-6"	0'-6"	--	--	0	--	--	--	Set "A5" - Vertical Tie Bars
A552-09	72	4'-4"	S	0	0'-6"	3'-4"	0'-6"	--	--	0	--	--	--	Set "A5" - Vertical Tie Bars
A552-10	72	4'-3"	S	0	0'-6"	3'-3"	0'-6"	--	--	0	--	--	--	Set "A5" - Vertical Tie Bars
A552-11	72	4'-1"	S	0	0'-6"	3'-1"	0'-6"	--	--	0	--	--	--	Set "A5" - Vertical Tie Bars
A552-12	72	4'-0"	S	0	0'-6"	3'-0"	0'-6"	--	--	0	--	--	--	Set "A5" - Vertical Tie Bars
A552-13	72	3'-10"	S	0	0'-6"	2'-10"	0'-6"	--	--	0	--	--	--	Set "A5" - Vertical Tie Bars
A552-14	72	3'-9"	S	0	0'-6"	2'-9"	0'-6"	--	--	0	--	--	--	Set "A5" - Vertical Tie Bars
A552-15	72	3'-8"	S	0	0'-6"	2'-8"	0'-6"	--	--	0	--	--	--	Set "A5" - Vertical Tie Bars
A552-16	72	3'-6"	S	0	0'-6"	2'-6"	0'-6"	--	--	0	--	--	--	Set "A5" - Vertical Tie Bars
A552-17	72	3'-5"	S	0	0'-6"	2'-5"	0'-6"	--	--	0	--	--	--	Set "A5" - Vertical Tie Bars
A552-18	72	3'-4"	S	0	0'-6"	2'-4"	0'-6"	--	--	0	--	--	--	Set "A5" - Vertical Tie Bars
A552-19	72	3'-3"	S	0	0'-6"	2'-3"	0'-6"	--	--	0	--	--	--	Set "A5" - Vertical Tie Bars
A552-20	72	3'-2"	S	0	0'-6"	2'-2"	0'-6"	--	--	0	--	--	--	Set "A5" - Vertical Tie Bars
A552-21	72	3'-1"	S	0	0'-6"	2'-1"	0'-6"	--	--	0	--	--	--	Set "A5" - Vertical Tie Bars
A552-22	72	3'-0"	S	0	0'-6"	2'-0"	0'-6"	--	--	0	--	--	--	Set "A5" - Vertical Tie Bars
A552-23	72	2'-11"	S	0	0'-6"	1'-11"	0'-6"	--	--	0	--	--	--	Set "A5" - Vertical Tie Bars
A552-24	72	2'-10"	S	0	0'-6"	1'-10"	0'-6"	--	--	0	--	--	--	Set "A5" - Vertical Tie Bars
A552-25	72	2'-9"	S	0	0'-6"	1'-9"	0'-6"	--	--	0	--	--	--	Set "A5" - Vertical Tie Bars
A552-26	144	2'-8"	S	0	0'-6"	1'-8"	0'-6"	--	--	0	--	--	--	Set "A5" - Vertical Tie Bars
A552-27	144	2'-7"	S	0	0'-6"	1'-7"	0'-6"	--	--	0	--	--	--	Set "A5" - Vertical Tie Bars
A552-28	144	2'-6"	S	0	0'-6"	1'-6"	0'-6"	--	--	0	--	--	--	Set "A5" - Vertical Tie Bars
A552-29	216	2'-5"	S	0	0'-6"	1'-5"	0'-6"	--	--	0	--	--	--	Set "A5" - Vertical Tie Bars
A552-30	432	2'-4"	S	0	0'-6"	1'-4"	0'-6"	--	--	0	--	--	--	Set "A5" - Vertical Tie Bars
A561	20	14'-0"	S	0	6'-3"	1'-6"	6'-3"	--	--	0	--	--	--	Set "SI"
A562	44	12'-0"	S	0	5'-3"	1'-6"	5'-3"	--	--	0	--	--	--	Set "S2"
A563	21	10'-0"	S	0	4'-3"	1'-6"	4'-3"	--	--	0	--	--	--	Set "S3"
A564	27	9'-6"	S	0'-6"	3'-4"	1'-6"	3'-4"	--	--	0'-10"	--	--	--	Set "S4"
A565	68	7'-6"	S	0'-7"	2'-3½"	1'-6"	2'-3½"	--	--	0'-10"	--	--	--	Set "S5"
A566	60	8'-0"	S	0	3'-3"	1'-6"	3'-3"	--	--	0	--	--	--	Sets "WI" & "W3"
A567-L	120	5'-5"	E	0'-6"	1'-7"	1'-3"	1'-7"	--	--	0'-6"	--	1'-5"	--	Sets "SI" to "S6," "WI" & "W3" Left
A567-R	120	5'-2"	E	0'-6"	1'-5½"	1'-3"	1'-5½"	--	--	0'-6"	--	1'-4½"	--	Sets "SI" to "S6," "WI" & "W3" Rt.
A571	162	5'-3"	S	0	1'-11"	1'-4"	1'-11"	--	--	0	--	--	--	Voussoirs
A572	106	8'-3"	D	4'-1½"	4'-1½"	--	--	--	--	--	0'-6½"	--	--	Top ends of Arch
A651	108	22'-6"	V	--	--	--	4'-6"	18"-0"	--	--	5'-2"	--	--	Set "AI"
A951	208	12'-0"	L	10'-9"	1'-3"	--	--	--	--	--	--	--	--	Sets "AI" & "A2"
A952	88	12'-0"	L	10'-9"	1'-3"	--	--	--	--	--	--	--	--	Sets "WI" & "W2"
A1051	208	18'-9"	L	17'-4"	1'-5"	--	--	--	--	--	--	--	--	Sets "AI" & "A2"
A1052	208	12'-3"	L	10'-10"	1'-5"	--	--	--	--	--	--	--	--	Sets "AI" & "A2"
A1053	208	17'-6"	L	16'-1"	1'-5"	--	--	--	--	--	--	--	--	Sets "AI" & "A2"
A1054	108	33'-3"	A	6'-10"	3'-7"	22'-10"	--	--	--	--	3'-0"	--	2'-6"	Set "AI"
A1055	108	33'-9"	A	12'-11"	3'-7"	17'-3"	--	--	--	--	3'-0"	--	2'-6"	Set "AI"
A1056	100	28'-3"	A	6'-10"	3'-7"	17'-10"	--	--	--	--	3'-0"	--	2'-6"	Set "A2"
A1057	100	28'-9"	A	12'-11"	3'-7"	12'-3"	--	--	--	--	3'-0"	--	2'-6"	Set "A2"
RETAINING WALLS														
R551-01	94	8'-0"	L	6'-2"	0'-10"	--	--	--	--	--	--	--	--	Ret. Wall "CI" - Set "RCI" & "RC2"
R551-02	110	7'-6"	L	5'-8"	0'-10"	--	--	--	--	--	--	--	--	Ret. Wall "C2" - Set "RCI" & "RC2"
R552	320	8'-0"	S	0	3'-3"	1'-6"	3'-3"	--	--	0	--	--	--	Sets "RA" & "RBI" through "RB6"
R553	104	10'-0"	S	0	4'-3"	1'-6"	4'-3"	--	--	0	--	--	--	Sets "RCI" & "RC2"
R554-L	223	5'-5"	E	0'-6"	1'-7"	1'-3"	1'-7"	--	--	0'-6"	--	1'-5"	--	Sets "RAI," "RBI" & "RCI" Left
R554-R	222	5'-2"	E	0'-6"	1'-5½"	1'-3"	1'-5½"	--	--	0'-6"	--	1'-4½"	--	Sets "RAI," "RBI" & "RCI" Right
R951	216	12'-9"	L	11'-2"	1'-7"	--	--	--	--	--	--	--	--	Sets "RAI" & "RA2"
R952-01	59	10'-6"	L	8'-11"	1'-7"	--	--	--	--	--	--	--	--	Ret. Wall "BI" - Sets "RBI" & "RB2"
R952-02	118	9'-6"	L	7'-11"	1'-7"	--	--	--	--	--	--	--	--	Ret. Wall "B2" - Sets "RBI" & "RB2"
R952-03	55	8'-9"	L	7'-2"	1'-7"	--	--	--	--	--	--	--	--	Ret. Wall "B3" - Sets "RBI" & "RB2"
R952-04	114	7'-6"	L	5'-11"	1'-7"	--	--	--	--	--	--	--	--	Ret. Wall "B4" - Sets "RBI" & "RB2"
R952-05	106	6'-3"	L	4'-8"	1'-7"	--	--	--	--	--	--	--	--	Ret. Wall "B5" & "B6" - Sets "RBI" & "RB2"

TYPE - BENDING DIAGRAMS

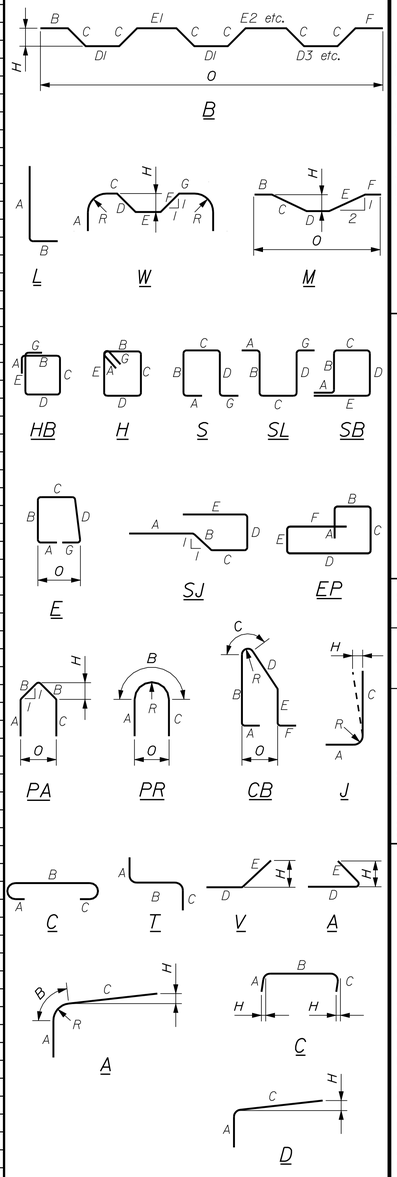

All dimensions are out-to-out of bar.

Bending details and hooks shall conform to the recommendations of the current revision of ACI Standard 315 and ACI Standard 318.

Reinforcing Bar: ASTM A615/A615M, Grade 60

GENERAL NOTES

1. The first two digits following the letter(s) of the mark indicate the size of the bar:

   Mark "A502" = bar size #5
   Mark "P805" = bar size #8
   Mark "S650" = bar size #6

2. Each crank bar, Type B, may be replaced by two (2) straight bars (one top and one bottom) of the same bar size as the crank bar. Payment in either case shall be based on crank bars as schedule on the plans.

STATE OF MAINE
DEPARTMENT OF TRANSPORTATION

BH-A106(000)

PIN 11060.00

BRIDGE NO. 2047

BRIDGE PLANS

	BY	DATE	SIGNATURE
PROJ. MANAGER	J. Wentworth		
DESIGN-DETAILED	J. Folsom	July 2010	
CHECKED-REVIEWED			
DESIGN2-DETAILED2			
DESIGN3-DETAILED3			
REVISIONS 1			
REVISIONS 2			
REVISIONS 3			
REVISIONS 4			
FIELD CHANGES			

P.E. NUMBER

DATE

NAPLES BAY BRIDGE
CHUTES RIVER
NAPLES CUMBERLAND COUNTY

REINFORCING STEEL SCHEDULE

SHEET NUMBER

121

OF 160

Filename: ...\00\GEOTECH\MSTA\122_BLP1.dgn Username: dana.damren Date:7/20/2010 Division: BRIDGE

CONCRETE TANK TO REMAIN
USE EXTREME CAUTION

STA. 16+79.41
PC

REMOVE

12" X 198.6' UD TYPE C
24" X 198.6' UD TYPE C
15" X 56' OPT. III
24" X 164' OPT. III
6" X 148.5' UD TYPE B
6" X 148.5' UD TYPE B

CB#13
CB#12
CB#11

16+00
17+00
18+00
19+00

CURVE DATA #2
PI = 18+73.62
D = 7°09'43.1"
Δ = 27°17'27.2" Lt.
R = 800.00'
L = 381.05'
T = 194.21'
E = 23.24'

BB-NBB-201
BB-NBB-101
BB-NBB-102
BB-NBB-301
BB-NBB-302
BB-NBB-303
BB-NBB-304
HB-NAPL-105
HB-NAPL-106

STA. 20+60.46
PT

15" X 23.6' OPT. III
12" X 110.0' UD TYPE C
6" X 93.0' UD TYPE B
12" X 101.0' UD TYPE C
6" X 98.5' UD TYPE B
6" X 98.5' UD TYPE B
6" X 124.0' UD TYPE B
12" X 115.5' UD TYPE C

CB#14C
CB#14D
CB#14A
CB#14B
CB#15
CB#16
CB#17

20+00
21+00
22+00

SEE SPECIAL DETAIL SHEET

25'-0" | 30'-0" Navigation Channel
63'-6" Clear
80'-0" Bridge Span

PLAN

BB: BRIDGE BORING
RWB: RETAINNING WALL BORING
HB: HIGHWAY BORING

25 0 25 50
Scale of Feet

STATE OF MAINE
DEPARTMENT OF TRANSPORTATION

BH-A106(000)

PIN 11060.00

BRIDGE NO. 2047 BRIDGE PLANS

	BY	DATE
PROJ. MANAGER	J. Wentworth	JUN. 2010
DESIGN-DETAILED	K.MAGUIRE	
CHECKED-REVIEWED		
DESIGN2-DETAILED2		
DESIGN3-DETAILED3		
REVISIONS 1		
REVISIONS 2		
REVISIONS 3		
REVISIONS 4		
FIELD CHANGES		

SIGNATURE

P.E. NUMBER

DATE

NAPLES BAY BRIDGE
CHUTES RIVER
NAPLES CUMBERLAND COUNTY

BORING LOCATION PLAN

SHEET NUMBER
122
OF 160

Filename: ...\00\GEOTECH\MSTA\123_BLP2.dgn Division: BRIDGE Username: dana.damren Date:7/20/2010

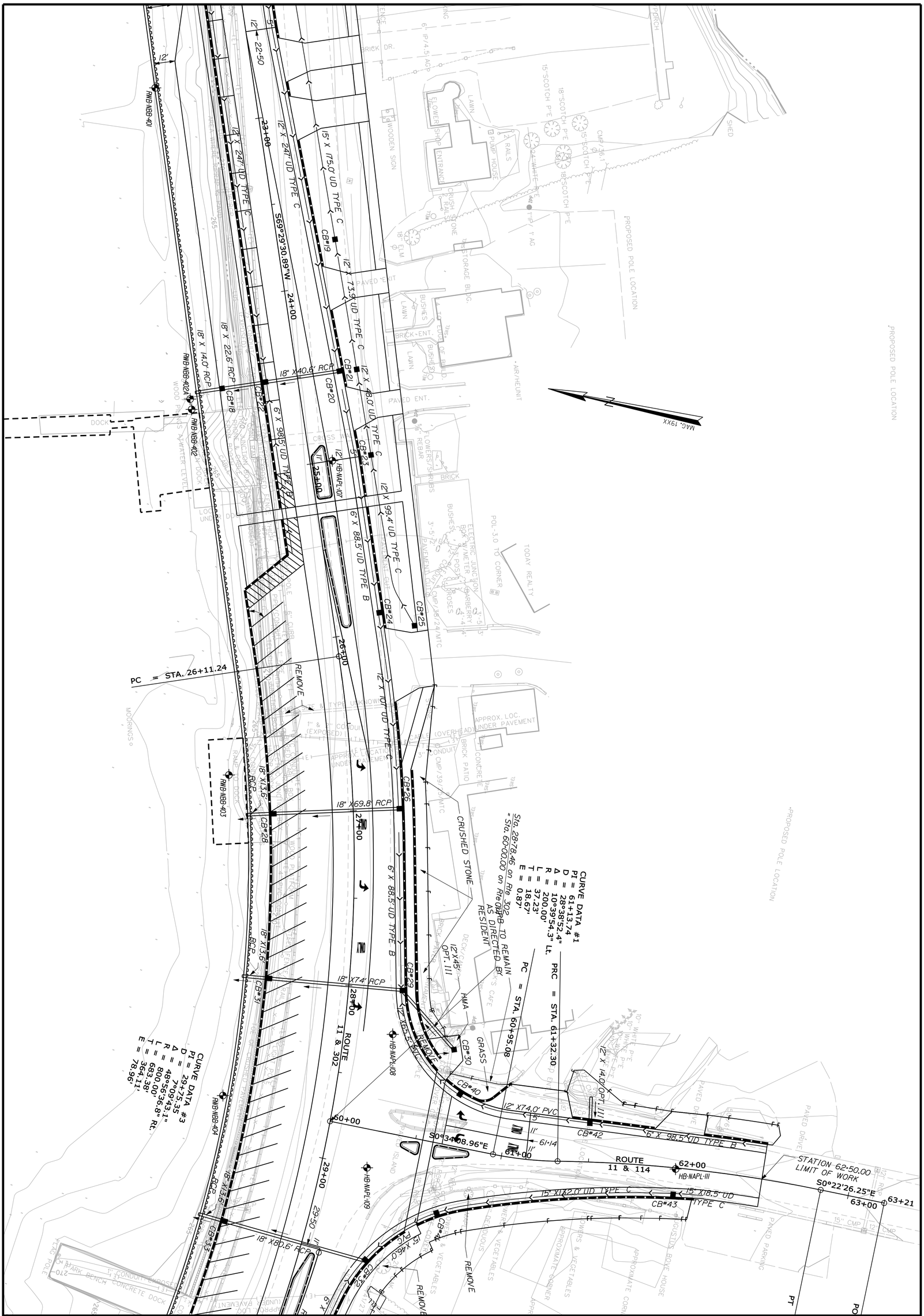

SHEET NUMBER 123 OF 160	NAPLES BAY BRIDGE CHUTES RIVER NAPLES CUMBERLAND COUNTY BORING LOCATION PLAN	PROJ. MANAGER J. Wentworth BY DATE DESIGN-DETAILED K.MAGUIRE T.WHITE JUN 2010 CHECKED-REVIEWED _____ _____ _____ DESIGN2-DETAILED2 _____ __ _____ DESIGN3-DETAILED3 _____ _____ _____ REVISIONS 1 _____ _____ REVISIONS 2 _____ _____ REVISIONS 3 _____ _____ REVISIONS 4 _____ _____ FIELD CHANGES _____ _____ SIGNATURE P.E. NUMBER DATE	STATE OF MAINE DEPARTMENT OF TRANSPORTATION BH-A106(000) PIN 11060.00 BRIDGE NO. 2047 BRIDGE PLANS

Filename: ...\00\GEOTECH\MSTA\124_BLP3.dgn Division: BRIDGE Username: dana.damren Date:7/20/2010

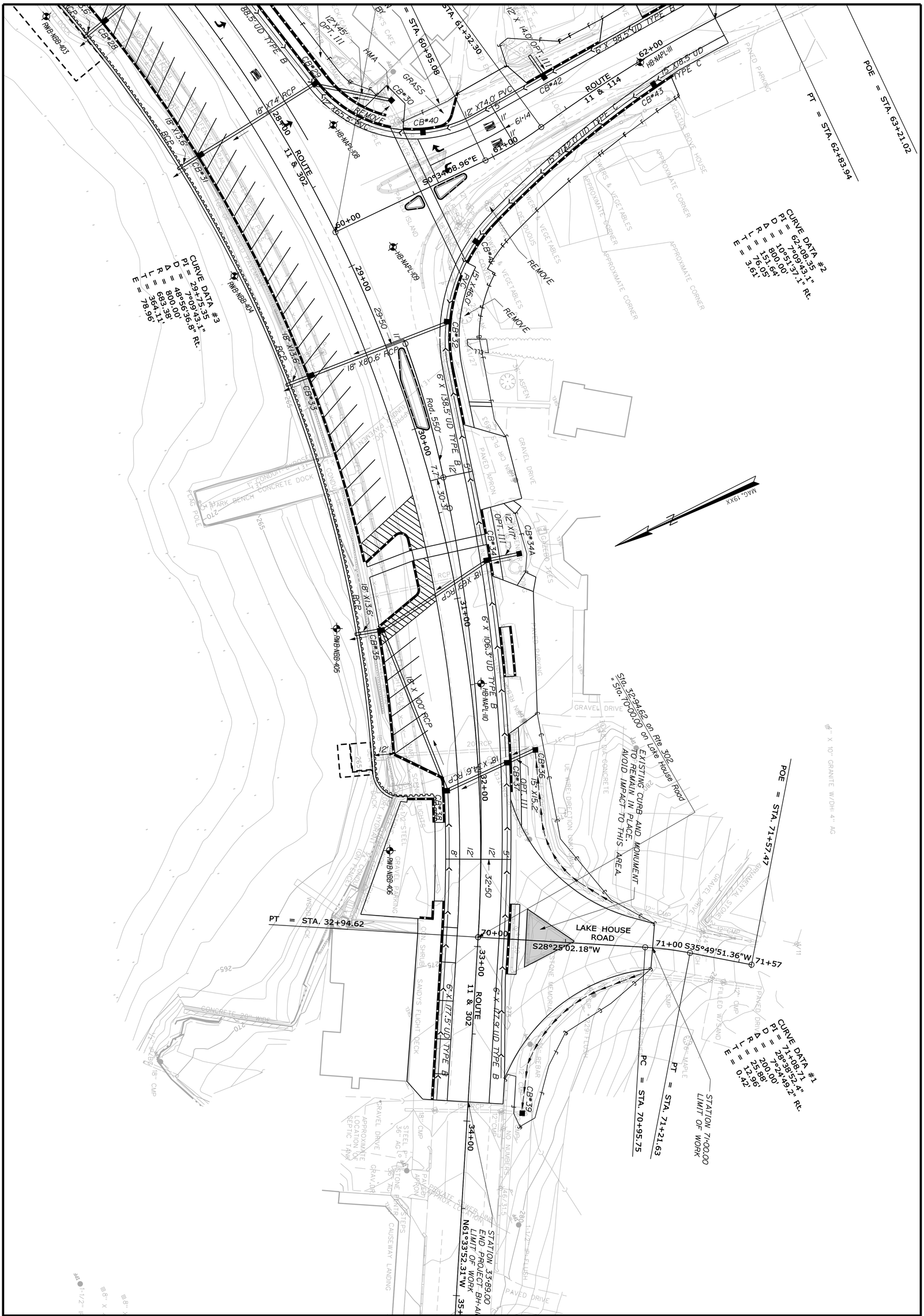

NAPLES BAY BRIDGE
CHUTES RIVER
NAPLES CUMBERLAND COUNTY

BORING LOCATION PLAN

PROJ. MANAGER	J. Wentworth	BY	DATE
DESIGN-DETAILED	K.MAGUIRE	T.WHITE	JUN 2010
CHECKED-REVIEWED	_____	_____	_____
DESIGN2-DETAILED2	_____	__	_____
DESIGN3-DETAILED3	_____	_____	_____
REVISIONS 1	_____		_____
REVISIONS 2	_____		_____
REVISIONS 3	_____		_____
REVISIONS 4	_____		_____
FIELD CHANGES	_____		_____

SIGNATURE

P.E. NUMBER

DATE

STATE OF MAINE
DEPARTMENT OF TRANSPORTATION

BH-A106(000)

PIN 11060.00

BRIDGE NO. 2047

BRIDGE PLANS

SHEET NUMBER 124 OF 160

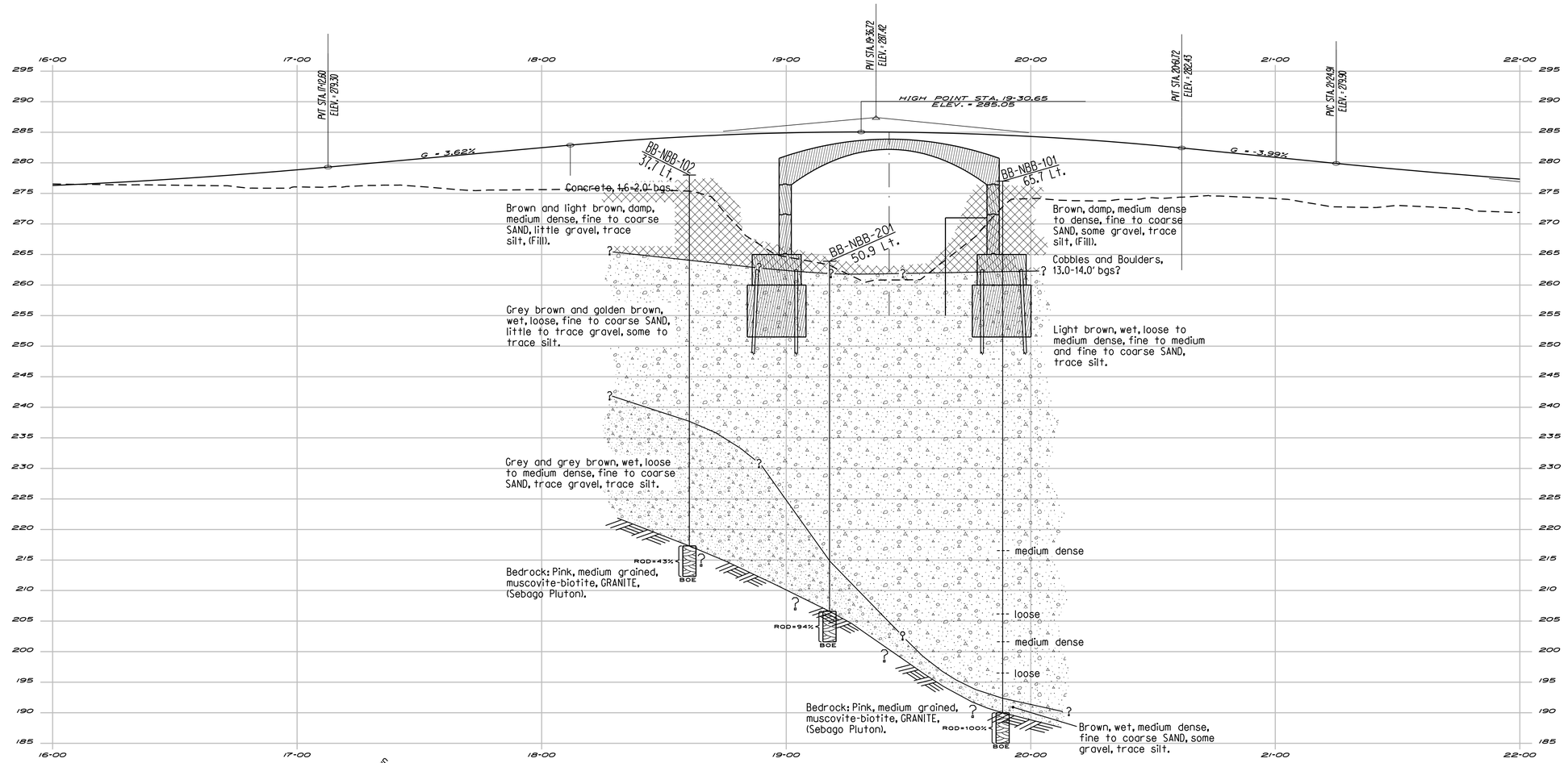

Boring No.
Offset, if shown
Strata Interface
Boring
ROD: Rock Quality Designation for Rock Core Sample
BOE: Bottom Of Exploration

PROFILE

HORIZ 25 0 25 50
VERT 10 0 10 20
SCALE

Note: This generalized interpretive soil profile is intended to convey trends in subsurface conditions. The boundaries between strata are approximate and idealized, and have been developed by interpretations of widely spaced explorations and samples. Actual soil transitions may vary and are probably more erratic. For more specific information refer to the exploration logs.

STATE OF MAINE
DEPARTMENT OF TRANSPORTATION

BH-A106(000)

PIN
11060.00

BRIDGE NO. 2047

BRIDGE PLANS

	BY	DATE
PROJ. MANAGER	J. Wentworth	
DESIGN-DETAILED	T. WHITE	JUN 2010
CHECKED-REVIEWED	K.MAGUIRE	------
DESIGN2-DETAILED2	--	------
DESIGN3-DETAILED3	------	------
REVISIONS 1	------	------
REVISIONS 2	------	------
REVISIONS 3	------	------
REVISIONS 4	------	------
FIELD CHANGES	------	------

SIGNATURE

P.E. NUMBER

DATE

NAPLES BAY BRIDGE
CHUTES RIVER
NAPLES CUMBERLAND COUNTY

INTERPRETIVE SUBSURFACE PROFILE

SHEET NUMBER

125

OF 160

Filename: ...\00\GEOTECH\MSTA\125_ISP1.dgn Division: BRIDGE Username: dana.damren Date:7/20/2010

Filename: ...\MSTA\126_BORING LOGS1.dgn Division: BRIDGE Username: dana.damren Date:7/20/2010

Maine Department of Transportation
Soil/Rock Exploration Log
US CUSTOMARY UNITS

Project: Naples Bay Bridge Over Chutes River
Location: US Route 302 Naples, Maine
Boring No.: BB-NBB-102
PIN: 11060.00

Driller:	MaineDOT	Elevation (ft.)	278.0	Auger ID/OD:	5" SSA
Operator:	C. Mann	Datum:	NAVD88	Sampler:	Standard Split Spoon
Logged By:	G. Lidstone	Rig Type:	CME 45C	Hammer Wt./Fall:	140#/30"
Date Start/Finish:	3/11/04, 3/15/04	Drilling Method:	Cased Washboring	Core Barrel:	NQ-2"
Boring Location:	18+58.1, 37.7 Lt.	Casing ID/OD:	NW	Water Level*:	16.5' bgs.

Definitions:
D = Split Spoon Sample
MD = Unsuccessful Split Spoon Sample attempt
U = Thin Wall Tube Sample
R = Rock Core Sample
V = Insitu Vane Shear Test
SSA = Solid Stem Auger

Definitions:
S_u = Insitu Field Vane Shear Strength (psf)
T_v = Pocket Torvane Shear Strength (psf)
q_p = Unconfined Compressive Strength (ksf)
$S_{u(lab)}$ = Lab Vane Shear Strength (psf)
WOH = weight of 140lb. hammer
WOR = weight of rods WOC = weight of casing

Definitions:
WC = water content, percent
LL = Liquid Limit
PL = Plastic Limit
PI = Plasticity Index
G = Grain Size Analysis
C = Consolidation Test

Depth (ft.)	Sample No.	Pen./Rec. (in.)	Sample Depth (ft.)	Blows (/6 in.) Shear Strength (psf) or RQD (%)	N-value	Casing Blows	Elevation (ft.)	Visual Description and Remarks	Laboratory Testing Results/ AASHTO and Unified Class
0						SSA	277.67	Pavement — 0.33	
								Brown, gravelly, fine to coarse SAND, trace silt. Concrete layer from 1.6-2.0' bgs.	
5	1D	24/15	5.00 - 7.00	12/7/8/8	15			Brown, damp, medium dense, fine to coarse SAND, little gravel, trace silt (Fill) .	
10	2D	24/24	10.00 - 12.00	11/10/13/13	23	19		Light brown, damp, medium dense, fine to coarse SAND, little gravel, trace silt, (Fill).	
						14			
						11			
						7			
						7	264.00	— 14.00	
15	3D	24/11	15.00 - 17.00	1/1/2/4	3	8		Grey-brown, wet, very loose, fine to coarse SAND, some silt, little gravel.	G#176582 A-2-4, SM WC=14.6%
						13			
						9			
						12			
						13			
20	4D	24/12	20.00 - 22.00	3/4/5/6	9	13		Grey, wet, loose, fine to coarse SAND, trace silt.	
						14			
						19			
						20			
						21			
25	5D	24/3	25.00 - 27.00	4/5/4/6	9	19		Golden brown, wet, loose, fine to medium SAND, trace gravel and silt.	
						20			
						28			
						29			
						31			
30	6D	24/10	30.00 - 32.00	4/5/5/5	10	35		Golden brown, wet, loose, fine to coarse SAND, trace gravel and silt.	
						31			
						42			
						46			
						46			
35	7D	24/10	35.00 - 37.00	3/4/4/4	8	41		Golden brown, wet, loose, fine to medium SAND, some coarse sand and silt, trace gravel.	G#176583 A-2-4, SM WC=22.1%
						43			
						48			
						60			
						61	238.00	— 40.00	
40	8D	24/16	40.00 - 42.00	3/4/5/3	9	63		Grey-brown, wet, loose, fine to coarse SAND, trace gravel, trace silt.	
						50			
						52			
						62			
						73			
45	9D	24/12	45.00 - 47.00	2/2/3/3	5	65		Grey, wet, loose, fine to coarse SAND, trace gravel and silt.	
						65			
						77			
						74			
						80			
50	10D	24/12	50.00 - 52.00	5/7/12/6	19	77		Grey, wet, medium dense, fine to coarse SAND, trace gravel and silt.	G#176584 A-1-b, SW WC=15.4%
						69			
						88			
						76			
						87			
55	11D	24/12	55.00 - 57.00	7/9/9/12	18	82		Grey, wet, medium dense, fine to coarse SAND, trace gravel and silt.	
						65			
						59			
						103			
						a175 RC		a175 blows for 0.5'. Roller coned ahead from 59.5 to 60.3' bgs.	
60	MD R1	1/0 60/b30	60.30 - 60.38 60.70 - 65.70	50(0.1') RQD = 43%	---	NQ	217.30	Roller coned ahead to 60.7' bgs. — 60.70	
						Core		Bedrock: Pink, medium grained, muscovite-biotite, GRANITE R1: Core Times (min:sec) 60.7-61.7 (4:22) 61.7-62.7 (6:20) 62.7-63.7 (8:07) 63.7-64.7 (7:33) 64.7-65.7 (6:25) Recovery=50% bThe other 30" of core stayed in bottom of boring, the core lifter broke.	
65							212.30	— 65.70 Bottom of Exploration at 65.70 feet below ground surface.	
70									
75									

Remarks:

Stratification lines represent approximate boundaries between soil types; transitions may be gradual.
* Water level readings have been made at times and under conditions stated. Groundwater fluctuations may occur due to conditions other than those present at the time measurements were made.

Page 1 of 1
Boring No.: BB-NBB-102

Maine Department of Transportation
Soil/Rock Exploration Log
US CUSTOMARY UNITS

Project: Naples Bay Bridge Over Chutes River
Location: US Route 302 Naples, Maine
Boring No.: BB-NBB-201
PIN: 11060.00

Driller:	MaineDOT	Elevation (ft.)	263.9	Auger ID/OD:	N/A
Operator:	Ervin Giguere	Datum:	NAVD88	Sampler:	Standard Split Spoon
Logged By:	K. Maguire	Rig Type:	CME 45C	Hammer Wt./Fall:	140#/30"
Date Start/Finish:	3/21/06-3/22/06	Drilling Method:	Cased Wash Boring	Core Barrel:	NQ-2"
Boring Location:	19+17.7, 50.9 Lt.	Casing ID/OD:	NW	Water Level*:	Boring in River

Definitions:
D = Split Spoon Sample
MD = Unsuccessful Split Spoon Sample attempt
U = Thin Wall Tube Sample
R = Rock Core Sample
V = Insitu Vane Shear Test
SSA = Solid Stem Auger

Definitions:
S_u = Insitu Field Vane Shear Strength (psf)
T_v = Pocket Torvane Shear Strength (psf)
q_p = Unconfined Compressive Strength (ksf)
$S_{u(lab)}$ = Lab Vane Shear Strength (psf)
WOH = weight of 140lb. hammer
WOR = weight of rods WOC = weight of casing

Definitions:
WC = water content, percent
LL = Liquid Limit
PL = Plastic Limit
PI = Plasticity Index
G = Grain Size Analysis
C = Consolidation Test

Depth (ft.)	Sample No.	Pen./Rec. (in.)	Sample Depth (ft.)	Blows (/6 in.) Shear Strength (psf) or RQD (%)	N-value	Casing Blows	Elevation (ft.)	Visual Description and Remarks	Laboratory Testing Results/ AASHTO and Unified Class
0	MD	24/0	0.00 - 2.00	1/4/2/5	6	8		No sample recovery. River bottom very cobbley.	
						15	261.90	— 2.00	
						16			
						8			
						5			
5						6			
	1D	24/6	6.00 - 8.00	2/4/7/4	11	3		Brown, wet, medium dense, fine to coarse SAND, little gravel, trace silt.	G#175876 A-1-b, SP WC=17.7%
						16			
						73			
						117			
10						98			
						92			
						118			
						119			
						144			
15						143			
	2D	24/12	16.00 - 18.00	18/27/29/32	56	69		Brown, wet, very dense, fine to medium SAND, trace coarse sand and silt.	G#175877 A-3, SP-SM WC=14.3%
						96			
						122			
						130			
20						129			
						178			
						139			
						140			
						123			
25						124			
	3D	24/12	26.00 - 28.00	2/2/3/4	5	68		Golden brown, wet, loose, fine to medium SAND, trace silt.	G#175878 A-3, SP WC=23.0%
						78			
						110			
						110			
30						101			
						153			
						154			
						128			
						133			
35						127			
	4D	24/8	36.00 - 38.00	6/6/7/6	13	109		Light brown, wet, medium dense, fine to medium SAND, trace coarse sand and silt.	G#175879 A-3, SP WC=20.3%
						135			
						146			
						181			
40						161			
						144			
						149			
						145			
						168			
45						152			
	5D	24/12	46.00 - 48.00	3/3/4/4	7	152		Light brown, wet, loose, fine to medium SAND, trace coarse sand and silt.	G#175880 A-3, SP WC=18.5%
						135			
						152	214.90	— 49.00	
						124			
50						126			
						146			
						162			
						143			
						157			
55						158			
	6D	6/2	56.00 - 56.50	16/50(0)	---	180		Grey brown, wet, medium dense, fine to coarse SAND, some gravel, little silt, grey rock in nose of spoon. a36 blows for 0.3'.	G#175881 A-1-b, SW-SM WC=13.7%
	R1	60/60	57.30 - 62.30	RQD = 94%		a36 NQ	206.60	— 57.30 Bedrock: White, grey, black, medium grained, hard, GRANITE. R1:Core Times (min:sec) 57.3-58.3' (3:43) 58.3-59.3' (3:13) 59.3-60.3' (2:20) VOID (?) at 60.0' bgs. 60.3-61.3' (2:50) 61.3-62.3' (2:06) 100% Recovery	
60									
							201.60	— 62.30 Bottom of Exploration at 62.30 feet below ground surface.	
65									
70									
75									

Remarks:
Casing and spoon driven with safty hammer.
13.7' from Bridge Deck to Ground.

Stratification lines represent approximate boundaries between soil types; transitions may be gradual.
* Water level readings have been made at times and under conditions stated. Groundwater fluctuations may occur due to conditions other than those present at the time measurements were made.

Page 1 of 1
Boring No.: BB-NBB-201

Maine Department of Transportation
Soil/Rock Exploration Log
US CUSTOMARY UNITS

Project: Naples Bay Bridge Over Chutes River
Location: US Route 302 Naples, Maine
Boring No.: BB-NBB-101
PIN: 11060.00

Driller:	MaineDOT	Elevation (ft.)	277.0	Auger ID/OD:	5" SSA
Operator:	C. Mann/G. Lidstone	Datum:	NAVD88	Sampler:	Standard Split Spoon
Logged By:	B. Wilder	Rig Type:	CME 45C	Hammer Wt./Fall:	140#/30"
Date Start/Finish:	3/14,22,23,27/04	Drilling Method:	Cased Washboring	Core Barrel:	NQ-2"
Boring Location:	19+93.7, 65.7 Lt.	Casing ID/OD:	NW	Water Level*:	16.0' bgs.

Definitions:
D = Split Spoon Sample
MD = Unsuccessful Split Spoon Sample attempt
U = Thin Wall Tube Sample
R = Rock Core Sample
V = Insitu Vane Shear Test
SSA = Solid Stem Auger

Definitions:
S_u = Insitu Field Vane Shear Strength (psf)
T_v = Pocket Torvane Shear Strength (psf)
q_p = Unconfined Compressive Strength (ksf)
$S_{u(lab)}$ = Lab Vane Shear Strength (psf)
WOH = weight of 140lb. hammer
WOR = weight of rods WOC = weight of casing

Definitions:
WC = water content, percent
LL = Liquid Limit
PL = Plastic Limit
PI = Plasticity Index
G = Grain Size Analysis
C = Consolidation Test

Depth (ft.)	Sample No.	Pen./Rec. (in.)	Sample Depth (ft.)	Blows (/6 in.) Shear Strength (psf) or RQD (%)	N-value	Casing Blows	Elevation (ft.)	Visual Description and Remarks	Laboratory Testing Results/ AASHTO and Unified Class
0						SSA	276.58	Pavement — 0.42	
5	1D	24/20	5.00 - 7.00	15/12/8/8	20			Brown, damp, medium dense, fine to coarse SAND, some gravel, (Fill).	
10	2D	24/16	10.00 - 12.00	11/15/28/34	43			Brown, damp, dense, fine to coarse SAND, some gravel, trace silt, (Fill).	
						50		Roller coned through Boulder at 13.4-14.0' bgs. Cobbles and boulders 14.0-15.0' bgs.	
						85	262.00	— 15.00	
15	3D	24/9	15.00 - 17.00	10/9/9/12	18	14		Grey-brown, wet, medium dense, fine to coarse SAND, little gravel, trace silt.	
						14			
						19			
						28			
						29			
20	4D	24/8	20.00 - 22.00	10/9/8/7	17	13		Light brown, wet, medium dense, fine to medium SAND, trace coarse sand and silt.	G#176585 A-3, SP-SM WC=22.5%
						12			
						11			
						23			
						28			
25	5D	24/10	25.00 - 27.00	4/3/3/4	6	20		Light brown, wet, loose, fine to medium SAND, trace silt.	
						15			
						18			
						22			
						31			
30	6D	24/12	30.00 - 32.00	2/2/2/2	4	34		Light brown, wet, very loose, fine to medium SAND, trace silt.	G#176586 A-2-4, SM WC=21.9%
						30			
						33			
						41			
						45			
35	7D	24/5	35.00 - 37.00	1/1/2/2	3	39		Light brown, wet, very loose, fine to medium SAND, trace silt.	
						36			
						44			
						70			
						79			
40	8D	24/14	40.00 - 42.00	3/3/3/5	6	84		Light brown, wet, loose, fine to medium SAND, trace silt.	G#176587 A-3, SP-SM WC=20.9%
						63			
						67			
						75			
						78			
45	9D	24/8	45.00 - 47.00	3/4/4/5	8	95		Light brown, wet, loose, fine to medium SAND, trace silt.	
						65			
						77			
						88			
						115			
50									

Remarks:

Stratification lines represent approximate boundaries between soil types; transitions may be gradual.
* Water level readings have been made at times and under conditions stated. Groundwater fluctuations may occur due to conditions other than those present at the time measurements were made.

Page 1 of 2
Boring No.: BB-NBB-101

Maine Department of Transportation
Soil/Rock Exploration Log
US CUSTOMARY UNITS

Project: Naples Bay Bridge Over Chutes River
Location: US Route 302 Naples, Maine
Boring No.: BB-NBB-101
PIN: 11060.00

Driller:	MaineDOT	Elevation (ft.)	277.0	Auger ID/OD:	5" SSA
Operator:	C. Mann/G. Lidstone	Datum:	NAVD88	Sampler:	Standard Split Spoon
Logged By:	B. Wilder	Rig Type:	CME 45C	Hammer Wt./Fall:	140#/30"
Date Start/Finish:	3/14,22,23,27/04	Drilling Method:	Cased Washboring	Core Barrel:	NQ-2"
Boring Location:	19+93.7, 65.7 Lt.	Casing ID/OD:	NW	Water Level*:	16.0' bgs.

Definitions:
D = Split Spoon Sample
MD = Unsuccessful Split Spoon Sample attempt
U = Thin Wall Tube Sample
R = Rock Core Sample
V = Insitu Vane Shear Test
SSA = Solid Stem Auger

Definitions:
S_u = Insitu Field Vane Shear Strength (psf)
T_v = Pocket Torvane Shear Strength (psf)
q_p = Unconfined Compressive Strength (ksf)
$S_{u(lab)}$ = Lab Vane Shear Strength (psf)
WOH = weight of 140lb. hammer
WOR = weight of rods WOC = weight of casing

Definitions:
WC = water content, percent
LL = Liquid Limit
PL = Plastic Limit
PI = Plasticity Index
G = Grain Size Analysis
C = Consolidation Test

Depth (ft.)	Sample No.	Pen./Rec. (in.)	Sample Depth (ft.)	Blows (/6 in.) Shear Strength (psf) or RQD (%)	N-value	Casing Blows	Elevation (ft.)	Visual Description and Remarks	Laboratory Testing Results/ AASHTO and Unified Class
50	10D	24/3	50.00 - 52.00	3/3/4/4	7	83		Light brown, wet, loose, fine to medium SAND, trace silt.	G#176588 A-3, SP-SM WC=23.7%
						53			
						56		Roller coned ahead to 55.0' bgs.	
						64			
						82			
55	11D	24/1	55.00 - 57.00	3/3/6/7	9	73		Light brown, wet, loose, fine to medium SAND, trace silt.	
						77			
						112		Did not roller cone ahead.	
						90			
						112			
60	12D	24/12	60.00 - 62.00	3/6/6/6	12	97		Light brown, wet, medium dense, fine to coarse SAND, trace silt.	
						88			
						90		Roller coned ahead to 65.0' bgs.	
						97			
						109			
65	13D	24/24	65.00 - 67.00	4/8/15/29	23	103		Light brown, wet, medium dense, fine to coarse SAND, trace silt.	
						104			
						103		Roller coned ahead to 70.0' bgs.	
						88			
						108			
70	14D	24/12	70.00 - 72.00	3/3/4/6	7	109		Light brown, wet, loose, fine to medium SAND, trace silt.	
						111			
						134		Did not roller cone ahead.	
						136			
						140			
75	15D	24/12	75.00 - 77.00	8/9/16/28	25	118		Light brown, wet, medium dense, fine to medium, SAND, trace silt, (running sands). Roller coned ahead to 80.0' bgs.	
						135			
						119			
						117			
						118			
80	16D	24/18	80.00 - 82.00	4/5/4/7	9	125		Light brown, wet, loose, fine to coarse, SAND, trace gravel, (running sands).	
						125			
						122		Did not roller coned ahead.	
						118			
						150	193.00	— 84.00	
85	17D	23/10	85.00 - 86.92	4/10/19/60(0.42)	29	138		Brown, wet, medium dense, fine to coarse SAND, some gravel, trace silt.	
						a250	190.10	a250 blows for 0.9'. Roller coned ahead to 87.0' bgs. — 86.90	
	R1	60/60	87.00 - 92.00	RQD = 100%		NQ Core		Bedrock: Pink, medium grained, carboniferous, muscovite-biotite, GRANITE R1: Core Times (min:sec) 87.0-88.0 (9:40) 88.0-89.0 (9:13) 89.0-90.0 (6:04) 90.0-91.0 (5:56) 91.0-92.0 (6:55) Recovery=100%	
90									
							185.00	— 92.00 Bottom of Exploration at 92.00 feet below ground surface.	
95									
100									

Remarks:

Stratification lines represent approximate boundaries between soil types; transitions may be gradual.
* Water level readings have been made at times and under conditions stated. Groundwater fluctuations may occur due to conditions other than those present at the time measurements were made.

Page 2 of 2
Boring No.: BB-NBB-101

STATE OF MAINE
DEPARTMENT OF TRANSPORTATION
BH-A106(000)
BRIDGE NO. 2047
PIN 11060.00
BRIDGE PLANS

		BY	DATE
PROJ. MANAGER	J. Wentworth		
DESIGN-DETAILED	K.MAGUIRE	T.WHITE	JULY 2010
CHECKED-REVIEWED			
DESIGN2-DETAILED2			
DESIGN3-DETAILED3			
REVISIONS 1			
REVISIONS 2			
REVISIONS 3			
REVISIONS 4			
FIELD CHANGES			

SIGNATURE
P.E. NUMBER
DATE

NAPLES BAY BRIDGE
CHUTES RIVER
NAPLES CUMBERLAND COUNTY
BORING LOGS

SHEET NUMBER
126
OF 160

Filename: ...\MSTA\127_BORING LOGS2.dgn   Division: BRIDGE   Username: dana.damren   Date:7/20/2010

Maine Department of Transportation
Soil/Rock Exploration Log
US CUSTOMARY UNITS

Project: Naples Bay Bridge Over Chutes River
Location: US Route 302 Naples, Maine

Boring No.: BB-NBB-304
PIN: 11060.00

Driller:	MaineDOT	Elevation (ft.)	265.3	Auger ID/OD:	N/A
Operator:	E. Giguere	Datum:	NAVD88	Sampler:	N/A
Logged By:	B. Wilder	Rig Type:	CME 45C on Barge	Hammer Wt./Fall:	300#/16"
Date Start/Finish:	11/1/06-11/1/06	Drilling Method:	Cased Wash Boring	Core Barrel:	NQ-2"
Boring Location:	18+54.8, 76.7 Rt.	Casing ID/OD:	NW	Water Level*:	Boring in Lake

Definitions:
D = Split Spoon Sample
MD = Unsuccessful Split Spoon Sample attempt
U = Thin Wall Tube Sample
R = Rock Core Sample
V = Insitu Vane Shear Test
SSA = Solid Stem Auger

Definitions:
S_u = Insitu Field Vane Shear Strength (psf)
T_v = Pocket Torvane Shear Strength (psf)
q_p = Unconfined Compressive Strength (ksf)
$S_{u(lab)}$ = Lab Vane Shear Strength (psf)
WOH = weight of 140lb. hammer
WOR = weight of rods WOC = weight of casing

Definitions:
WC = water content, percent
LL = Liquid Limit
PL = Plastic Limit
PI = Plasticity Index
G = Grain Size Analysis
C = Consolidation Test

Depth (ft.)	Sample No.	Pen./Rec. (in.)	Sample Depth (ft.)	Blows (/6 in. Shear Strength (psf) or RQD (%)	N-value	Casing Blows	Elevation (ft.)	Visual Description and Remarks	Laboratory Testing Results/ AASHTO and Unified Class.
0						36		Golden brown, fine to coarse SAND, trace silt, (in wash).	
						12			
						16			
						28			
						23			
5						17			
						18			
						17			
						17			
						18			
10						18			
						14			
						16			
						32			
						49			
15						36			
						30			
						28			
						17			
	R1	60/46	19.80 - 24.80			a100 ND		a100 blows for 0.8'.	
20							245.50	19.80 Boulders from 19.8-21.0' bgs. R1:Core Times (min:sec) 19.8-20.8' (4:14) 20.8-21.8' (3:50)	
							244.30	21.00 Top of Bedrock at Elev. 244.3'. Bedrock: 21.8-22.8' (2:30) 22.8-23.8' (2:20) 23.8-24.8' (3:16) 77% Recovery Left 6" of core in boring.	
25	R2	52.8/60	24.80 - 29.20	RQD = 92%				Bedrock: R2:Core Times (min:sec) 24.8-25.8' (3:01) 25.8-26.8' (2:22) 26.8-27.8' (2:23) 27.8-28.8' (2:07) 28.8-29.2' (1:34) 100% Recovery Recovered 6" core from R1.	
30	R3	60/60	29.20 - 34.20	RQD = 100%				Bedrock: R3:Core Times (min:sec) 29.2-30.2' (2:44) 30.2-31.2' (2:17) 31.2-32.2' (2:09) 32.2-33.2' (2:05) 33.2-34.2' (2:07) 100% Recovery	
35							231.10	34.20 Bottom of Exploration at 34.20 feet below ground surface.	
40									
45									
50									

Remarks:

Stratification lines represent approximate boundaries between soil types: transitions may be gradual.

* Water level readings have been made at times and under conditions stated. Groundwater fluctuations may occur due to conditions other than those present at the time measurements were made.

Page 1 of 1
Boring No.: BB-NBB-304

Maine Department of Transportation
Soil/Rock Exploration Log
US CUSTOMARY UNITS

Project: Naples Bay Bridge Over Chutes River
Location: US Route 302 Naples, Maine

Boring No.: BB-NBB-303
PIN: 11060.00

Driller:	MaineDOT	Elevation (ft.)	262.0 +/-	Auger ID/OD:	N/A
Operator:	E. Giguere	Datum:	NAVD88	Sampler:	N/A
Logged By:	B. Wilder	Rig Type:	CME 45C on Barge	Hammer Wt./Fall:	300#/16"
Date Start/Finish:	10/31/06-10/31/06	Drilling Method:	Cased Wash Boring	Core Barrel:	NQ-2"
Boring Location:	19+60.6, 57.6 Rt.	Casing ID/OD:	NW	Water Level*:	Boring in Lake

Definitions:
D = Split Spoon Sample
MD = Unsuccessful Split Spoon Sample attempt
U = Thin Wall Tube Sample
R = Rock Core Sample
V = Insitu Vane Shear Test
SSA = Solid Stem Auger

Definitions:
S_u = Insitu Field Vane Shear Strength (psf)
T_v = Pocket Torvane Shear Strength (psf)
q_p = Unconfined Compressive Strength (ksf)
$S_{u(lab)}$ = Lab Vane Shear Strength (psf)
WOH = weight of 140lb. hammer
WOR = weight of rods WOC = weight of casing

Definitions:
WC = water content, percent
LL = Liquid Limit
PL = Plastic Limit
PI = Plasticity Index
G = Grain Size Analysis
C = Consolidation Test

Depth (ft.)	Sample No.	Pen./Rec. (in.)	Sample Depth (ft.)	Blows (/6 in. Shear Strength (psf) or RQD (%)	N-value	Casing Blows	Elevation (ft.)	Visual Description and Remarks	Laboratory Testing Results/ AASHTO and Unified Class.
0						1		Golden brown, fine to medium SAND, trace silt, (in wash).	
						1			
						3			
						17			
						26			
5						28			
						31			
						20			
						50			
						16			
10						16			
						17			
						17			
						18			
						20			
15						14			
						22			
						22			
						24			
						29			
20						30			
						36			
						30			
						26			
						30			
25						35			
						47			
						46			
						63			
						69			
30						87			
						98			
						93			
						94			
						132			
35						124			
						133			
						97			
						93			
						121			
40						113			
						97			
						90			
						87			
						85			
45						109			
						132			
						135		Golden brown, very dense, fine to coarse SAND, (in wash).	
						184			
						173			
50						230			
						174			
						162			
						177			
						188			
55						207			
						108			
						130			
						138			
						144			
60						126			
						152			
						143			
						142			
						132			
65						129			
						103			
						105			
						129			
						153		a160 blows for 0.5'.	
70	R1	12/12	70.70 - 71.70	RQD = 100%		a160 ND	191.50	70.50 Top of Bedrock at Elev. 191.5'. Roller coned into bedrock from 70.5-70.7' bgs. Bedrock: R1:Core Times (min:sec) 70.7-71.7' (6:14) 100% Recovery	
							190.30	71.70 Bottom of Exploration at 71.70 feet below ground surface. Core barrel blocked. Casing bent. Could not obtain any further rock core.	
75									

Remarks:

9.3' from Barge Deck to Ground.

Stratification lines represent approximate boundaries between soil types: transitions may be gradual.

* Water level readings have been made at times and under conditions stated. Groundwater fluctuations may occur due to conditions other than those present at the time measurements were made.

Page 1 of 1
Boring No.: BB-NBB-303

Maine Department of Transportation
Soil/Rock Exploration Log
US CUSTOMARY UNITS

Project: Naples Bay Bridge Over Chutes River
Location: US Route 302 Naples, Maine

Boring No.: BB-NBB-302
PIN: 11060.00

Driller:	MaineDOT	Elevation (ft.)	262.8	Auger ID/OD:	N/A
Operator:	E. Giguere	Datum:	NAVD88	Sampler:	N/A
Logged By:	B. Wilder/G. Lidstone	Rig Type:	CME 45C on Barge	Hammer Wt./Fall:	300#/16"
Date Start/Finish:	10/19/06-10/19/06	Drilling Method:	Cased Wash Boring	Core Barrel:	NQ-2"
Boring Location:	20+66.6, 46.6 Rt.	Casing ID/OD:	HW & NW	Water Level*:	Boring in Lake

Definitions:
D = Split Spoon Sample
MD = Unsuccessful Split Spoon Sample attempt
U = Thin Wall Tube Sample
R = Rock Core Sample
V = Insitu Vane Shear Test
SSA = Solid Stem Auger

Definitions:
S_u = Insitu Field Vane Shear Strength (psf)
T_v = Pocket Torvane Shear Strength (psf)
q_p = Unconfined Compressive Strength (ksf)
$S_{u(lab)}$ = Lab Vane Shear Strength (psf)
WOH = weight of 140lb. hammer
WOR = weight of rods WOC = weight of casing

Definitions:
WC = water content, percent
LL = Liquid Limit
PL = Plastic Limit
PI = Plasticity Index
G = Grain Size Analysis
C = Consolidation Test

Depth (ft.)	Sample No.	Pen./Rec. (in.)	Sample Depth (ft.)	Blows (/6 in. Shear Strength (psf) or RQD (%)	N-value	Casing Blows	Elevation (ft.)	Visual Description and Remarks	Laboratory Testing Results/ AASHTO and Unified Class.
0						3		Brown, fine to medium SAND, (in wash).	
						17			
						29			
						33			
						34			
5						29			
						21			
						15			
						17			
						20			
10						25			
						28			
						20			
						18			
						20			
15						31			
						29		Washed out HW casing, switched to NW casing at 17.0' bgs.	
						WOC			
						2			
						7			
20						6			
						9			
						9			
						11			
						14			
25						10			
						16			
						26			
						39			
						51			
30						45			
						56			
						68			
						100			
						107			
35						126			
						127		Washed out casing, fine to medium SAND, (in wash). Roller coned to 41.0' bgs.	
						200			
						305			
						680			
40						985			
						188			
						155			
						235			
						240			
45						270			
						210		Washed out casing.	
						248			
						407			
						470			
50									

Remarks:

Donut hammer, cathead, rope to 41.0' bgs. Then switched to safety hammer.
8.1' from Barge Deck to Ground when surveyed on 10/19/06.
Water depth fluctuated due to rain. 10/23/06, casing sanded together, broke 140# safety hammer. 10/24/06: 07:30-17:00 , pulled HW casing, started at 41.0' bgs. 10/25/06: 07:30-14:00, had to stop work, waves too high.

Stratification lines represent approximate boundaries between soil types: transitions may be gradual.

* Water level readings have been made at times and under conditions stated. Groundwater fluctuations may occur due to conditions other than those present at the time measurements were made.

Page 1 of 2
Boring No.: BB-NBB-302

Maine Department of Transportation
Soil/Rock Exploration Log
US CUSTOMARY UNITS

Project: Naples Bay Bridge Over Chutes River
Location: US Route 302 Naples, Maine

Boring No.: BB-NBB-302
PIN: 11060.00

Driller:	MaineDOT	Elevation (ft.)	262.8	Auger ID/OD:	N/A
Operator:	E. Giguere	Datum:	NAVD88	Sampler:	N/A
Logged By:	B. Wilder/G. Lidstone	Rig Type:	CME 45C on Barge	Hammer Wt./Fall:	300#/16"
Date Start/Finish:	10/19/06-10/19/06	Drilling Method:	Cased Wash Boring	Core Barrel:	NQ-2"
Boring Location:	20+66.6, 46.6 Rt.	Casing ID/OD:	HW & NW	Water Level*:	Boring in Lake

Definitions:
D = Split Spoon Sample
MD = Unsuccessful Split Spoon Sample attempt
U = Thin Wall Tube Sample
R = Rock Core Sample
V = Insitu Vane Shear Test
SSA = Solid Stem Auger

Definitions:
S_u = Insitu Field Vane Shear Strength (psf)
T_v = Pocket Torvane Shear Strength (psf)
q_p = Unconfined Compressive Strength (ksf)
$S_{u(lab)}$ = Lab Vane Shear Strength (psf)
WOH = weight of 140lb. hammer
WOR = weight of rods WOC = weight of casing

Definitions:
WC = water content, percent
LL = Liquid Limit
PL = Plastic Limit
PI = Plasticity Index
G = Grain Size Analysis
C = Consolidation Test

Depth (ft.)	Sample No.	Pen./Rec. (in.)	Sample Depth (ft.)	Blows (/6 in. Shear Strength (psf) or RQD (%)	N-value	Casing Blows	Elevation (ft.)	Visual Description and Remarks	Laboratory Testing Results/ AASHTO and Unified Class.
50						420			
						205		Washed out casing at 51.0' bgs. Brown, fine SAND, trace medium sand.	
						415			
						610			
						725			
55						820			
						590		Washed out casing at 56.0' bgs. Washed ahead of casing to 61.0' bgs. Brown, fine SAND, trace medium sand, trace coarse sand.	
						760			
						740			
						707			
60						775			
						290		Washed out casing, some coarse sand, (in wash).	
						485			
						282			
						188			
65						210			
						312		Washed out casing at 66.0' bgs. Similar to above.	
						478			
						348			
						259			
70						218	192.20	70.60 Brown, coarse SAND, some gravel. Roller coned ahead of casing from 71.0- 74.7' bgs.	
						340			
						278			
						252		a151 blows for 0.7'.	
	R1	22.8/2	74.70 - 76.60			a151 ND		R1:Cobbles	
75						305			
						210		Roller coned ahead of casing from 76.5- 79.7' bgs.	
						392			
						389		b200 blows for 0.3'.	
	R2	60/60	79.70 - 84.70			b200 RC ND	183.50	79.30 Top of Bedrock at Elev. 183.5'. Roller coned into bedrock from 79.3-79.7' bgs. Bedrock: R2:Core Times (min:sec) 79.7-80.7' (6:00) 80.7-81.7' (6:00) 81.7-82.7' (7:00) 82.7-83.7' (6:00) 83.7-84.7' (5:00) 100% Recovery	
80									
85							178.10	84.70 Bottom of Exploration at 84.70 feet below ground surface.	
90									
95									
100									

Remarks:

Donut hammer, cathead, rope to 41.0' bgs. Then switched to safety hammer.
8.1' from Barge Deck to Ground when surveyed on 10/19/06.
Water depth fluctuated due to rain. 10/23/06, casing sanded together, broke 140# safety hammer. 10/24/06: 07:30-17:00 , pulled HW casing, started at 41.0' bgs. 10/25/06: 07:30-14:00, had to stop work, waves too high.

Stratification lines represent approximate boundaries between soil types: transitions may be gradual.

* Water level readings have been made at times and under conditions stated. Groundwater fluctuations may occur due to conditions other than those present at the time measurements were made.

Page 2 of 2
Boring No.: BB-NBB-302

STATE OF MAINE
DEPARTMENT OF TRANSPORTATION

BH-A106(000)

BRIDGE PLANS
PIN 11060.00
BRIDGE NO. 2047

		BY	DATE
PROJ. MANAGER	J. Wentworth		
DESIGN-DETAILED	K.MAGUIRE	T.WHITE	JULY 2010
CHECKED-REVIEWED			
DESIGN2-DETAILED2			
DESIGN3-DETAILED3			
REVISIONS 1			
REVISIONS 2			
REVISIONS 3			
REVISIONS 4			
FIELD CHANGES			

SIGNATURE
P.E. NUMBER
DATE

NAPLES BAY BRIDGE
CHUTES RIVER
NAPLES   CUMBERLAND COUNTY

BORING LOGS

SHEET NUMBER
127
OF 160

Filename: ...\MSTA\128_BORING LOGS3.dgn   Division: BRIDGE   Username: dana.damren   Date:7/20/2010

Maine Department of Transportation
Soil/Rock Exploration Log
US CUSTOMARY UNITS

Project: Naples Bay Bridge Over Chutes River
Location: US Route 302 Naples, Maine

Boring No.: BB-NBB-301
PIN: 11060.00

Driller:	MaineDOT	Elevation (ft.)	272.3	Auger ID/OD:	4" Solid Stem Auger
Operator:	E. Giguere	Datum:	NAVD88	Sampler:	N/A
Logged By:	K. Maguire	Rig Type:	CME 45C	Hammer Wt./Fall:	300#/16"
Date Start/Finish:	11/6/06-11/7/06	Drilling Method:	Cased Wash Boring	Core Barrel:	NQ-2"
Boring Location:	21+78.4, 1.6 Lt.	Casing ID/OD:	NW	Water Level*:	4.0' bgs

Definitions:
D = Split Spoon Sample
MD = Unsuccessful Split Spoon Sample attempt
U = Thin Wall Tube Sample
R = Rock Core Sample
V = Insitu Vane Shear Test
SSA = Solid Stem Auger

Definitions:
S_u = Insitu Field Vane Shear Strength (psf)
T_v = Pocket Torvane Shear Strength (psf)
q_p = Unconfined Compressive Strength (ksf)
$S_{u(lab)}$ = Lab Vane Shear Strength (psf)
WOH = weight of 140lb. hammer
WOR = weight of rods WOC = weight of casing

Definitions:
WC = water content, percent
LL = Liquid Limit
PL = Plastic Limit
PI = Plasticity Index
G = Grain Size Analysis
C = Consolidation Test

Depth (ft.)	Sample No.	Pen./Rec. (in.)	Sample Depth (ft.)	Blows (/6 in.) Shear Strength (psf) or RQD (%)	N-value	Casing Blows	Elevation (ft.)	Graphic Log	Visual Description and Remarks	Laboratory Testing Results/ AASHTO and Unified Class
0						SSA			Pavement	
									Brown, fine to coarse silty SAND, trace gravel, (Fill).	
									Wet at 4.0' bgs.	
5										
									Causeway Fill	
10										
									Native Sand	
15						18				
						15				
						14				
						14				
						14				
20						15				
						12				
						13				
						11				
						9				
25						19				
						15				
						19				
						23				
						23				
30						34				
						31				
						34				
						33				
						39				
35						53				
						55				
						56				
						69				
						74				
40						108				
						97				
						105				
						121				
						92				
45						100				
						106				
						112				
						101				
						115				
50										

Remarks:
No samples, boring drilled to determine depth to bedrock for proposed temporary bridge structure.

Stratification lines represent approximate boundaries between soil types; transitions may be gradual.
* Water level readings have been made at times and under conditions stated. Groundwater fluctuations may occur due to conditions other than those present at the time measurements were made.

Page 1 of 2
Boring No.: BB-NBB-301

Maine Department of Transportation
Soil/Rock Exploration Log
US CUSTOMARY UNITS

Project: Naples Bay Bridge Over Chutes River
Location: US Route 302 Naples, Maine

Boring No.: BB-NBB-301
PIN: 11060.00

Driller:	MaineDOT	Elevation (ft.)	272.3	Auger ID/OD:	4" Solid Stem Auger
Operator:	E. Giguere	Datum:	NAVD88	Sampler:	N/A
Logged By:	K. Maguire	Rig Type:	CME 45C	Hammer Wt./Fall:	300#/16"
Date Start/Finish:	11/6/06-11/7/06	Drilling Method:	Cased Wash Boring	Core Barrel:	NQ-2"
Boring Location:	21+78.4, 1.6 Lt.	Casing ID/OD:	NW	Water Level*:	4.0' bgs

Definitions:
D = Split Spoon Sample
MD = Unsuccessful Split Spoon Sample attempt
U = Thin Wall Tube Sample
R = Rock Core Sample
V = Insitu Vane Shear Test
SSA = Solid Stem Auger

Definitions:
S_u = Insitu Field Vane Shear Strength (psf)
T_v = Pocket Torvane Shear Strength (psf)
q_p = Unconfined Compressive Strength (ksf)
$S_{u(lab)}$ = Lab Vane Shear Strength (psf)
WOH = weight of 140lb. hammer
WOR = weight of rods WOC = weight of casing

Definitions:
WC = water content, percent
LL = Liquid Limit
PL = Plastic Limit
PI = Plasticity Index
G = Grain Size Analysis
C = Consolidation Test

Depth (ft.)	Sample No.	Pen./Rec. (in.)	Sample Depth (ft.)	Blows (/6 in.) Shear Strength (psf) or RQD (%)	N-value	Casing Blows	Elevation (ft.)	Graphic Log	Visual Description and Remarks	Laboratory Testing Results/ AASHTO and Unified Class
50						158				
						141				
						147			Washed out casing.	
						139				
						153				
55						120				
						118				
						140				
						148				
						147				
60						212				
						198				
						200				
						186			Washed out casing.	
						163				
65						185				
						148				
						142				
						167				
						211				
70						260				
						232				
						254				
						163				
						190				
75						215				
						230				
						205				
						148			Washed out casing.	
						137				
80						185				
						204				
						297				
						210				
						198				
85						182				
						185				
						187				
						260			Gravel	
	R1	54/48	89.60 - 94.10	RQD = 8%		ɑ165 NQ	183.20		ɑ165 blows for 0.1'. 89.10 Top of Bedrock at Elev. 183.2'. Roller coned ahead from 89.1-89.6' bgs. Bedrock: R1:Core Times (min:sec) 89.6-90.6' (2:31) Seam 90.3-90.6' bgs. 90.6-91.6' (2:19) 91.6-92.6' (2:52) 92.6-93.6' (3:06) 93.6-94.1' (3:09) 91% Recovery	
90										
							178.20		94.10 Bottom of Exploration at 94.10 feet below ground surface.	
95										
100										

Remarks:
No samples, boring drilled to determine depth to bedrock for proposed temporary bridge structure.

Stratification lines represent approximate boundaries between soil types; transitions may be gradual.
* Water level readings have been made at times and under conditions stated. Groundwater fluctuations may occur due to conditions other than those present at the time measurements were made.

Page 2 of 2
Boring No.: BB-NBB-301

Maine Department of Transportation
Soil/Rock Exploration Log
US CUSTOMARY UNITS

Project: Naples Bay Bridge #2047 over Chutes River carrying Route 302
Location: Naples, Maine

Boring No.: RWB-NBB-401
PIN: 11060.00

Driller:	MaineDOT	Elevation (ft.)	261.1	Auger ID/OD:	N/A
Operator:	Giguere/Giles/Wright	Datum:	NAVD88	Sampler:	Standard Split Spoon
Logged By:	B. Wilder	Rig Type:	CME 45C	Hammer Wt./Fall:	140#/30"
Date Start/Finish:	10/6/09-10/7/09	Drilling Method:	Cased Wash Boring	Core Barrel:	BX
Boring Location:	22+74.1, 56.0 Rt.	Casing ID/OD:	NW	Water Level*:	Water Boring
Hammer Efficiency Factor: 0.84		Hammer Type:	Automatic ☒ Hydraulic ☐ Rope & Cathead ☐		

Definitions:
D = Split Spoon Sample
MD = Unsuccessful Split Spoon Sample attempt
U = Thin Wall Tube Sample
MU = Unsuccessful Thin Wall Tube Sample attempt
V = Insitu Vane Shear Test, PP = Pocket Penetrometer
MV = Unsuccessful Insitu Vane Shear Test attempt

R = Rock Core Sample
SSA = Solid Stem Auger
HSA = Hollow Stem Auger
RC = Roller Cone
WOH = weight of 140lb. hammer
WOR/C = weight of rods or casing
WO1P = Weight of one person

S_u = Insitu Field Vane Shear Strength (psf)
T_v = Pocket Torvane Shear Strength (psf)
q_p = Unconfined Compressive Strength (ksf)
N-uncorrected = Raw field SPT N-value
Hammer Efficiency Factor = Annual Calibration Value
N_{60} = SPT N-uncorrected corrected for hammer efficiency
N_{60} = (Hammer Efficiency Factor/60%)*N-uncorrected

$S_{u(lab)}$ = Lab Vane Shear Strength (psf)
WC = water content, percent
LL = Liquid Limit
PL = Plastic Limit
PI = Plasticity Index
G = Grain Size Analysis
C = Consolidation Test

Depth (ft.)	Sample No.	Pen./Rec. (in.)	Sample Depth (ft.)	Blows (/6 in.) Shear Strength (psf) or RQD (%)	N-uncorrected	N_{60}	Casing Blows	Elevation (ft.)	Graphic Log	Visual Description and Remarks	Laboratory Testing Results/ AASHTO and Unified Class
0							5				
							23				
							13				
							12				
							8				
5							6				
	1D	24/19	6.00 - 8.00	2/2/3/2	5	7	ɑHP			ɑHP = Hydraulic Push Grey, wet, loose, fine SAND, little silt.	
							HP				
							HP				
							HP				
10							HP				
							3				
							9				
							4				
							5				
15							5				
	2D	24/18	16.00 - 18.00	WOR/WOH/1/1	1	1	WOH			Similar to above, except very loose.	
							WOH				
							11				
							7				
20							14				
							17	239.10		22.00	
							18				
							21				
							35				
25							27				
	3D	24/17	26.00 - 28.00	3/2/3/3	5	7	WOH			Grey-brown, wet, loose, fine SAND, trace silt.	
							21				
							50				
							69				
30							63				
							31				
							36				
							35				
							86	226.60		34.50	
35							174				
	4D	24/15	36.00 - 38.00	WOH/WOH/1/1	1	1	141			Light brown, wet, very loose, fine SAND, trace silt.	
							207				
							167				
							221				
40							324	220.10		41.00	
							325				
							324				
							297				
							297				
45							278				
	5D	18/18	46.00 - 47.50	19/29/34	63	88	113			Brown, wet, very dense, fine to medium SAND, trace silt. 3.0' running sand.	
							135				
							184				
							230				
50							335				
							281				
							243				
							243				
							281				
55							284				
	6D	24/8	56.00 - 58.00	6/10/11/11	21	29	221			Similar to above, except medium dense. 5.0' running sand.	
							232				
							238				
							238				
60							284				
							232				
							286				
							300				
							300				
65							300				
	MD	24/0	66.00 - 68.00	3/10/10/12	20	28	270			Failed Sample attempt, similar to above in wash. 21.0' running sand.	
							278				
							235				
							243				
70							281				
	7D	24/17	71.00 - 73.00	2/2/3/5	5	7	135			Similar to above, except loose. Kept a head of water.	
							138				
							173				
							173				
75											

Remarks:
Raft Boring, 8.8' from Deck to Ground.
400-500# down pressure on Core Barrel.

Stratification lines represent approximate boundaries between soil types; transitions may be gradual.
* Water level readings have been made at times and under conditions stated. Groundwater fluctuations may occur due to conditions other than those present at the time measurements were made.

Page 1 of 2
Boring No.: RWB-NBB-401

Maine Department of Transportation
Soil/Rock Exploration Log
US CUSTOMARY UNITS

Project: Naples Bay Bridge #2047 over Chutes River carrying Route 302
Location: Naples, Maine

Boring No.: RWB-NBB-401
PIN: 11060.00

Driller:	MaineDOT	Elevation (ft.)	261.1	Auger ID/OD:	N/A
Operator:	Giguere/Giles/Wright	Datum:	NAVD88	Sampler:	Standard Split Spoon
Logged By:	B. Wilder	Rig Type:	CME 45C	Hammer Wt./Fall:	140#/30"
Date Start/Finish:	10/6/09-10/7/09	Drilling Method:	Cased Wash Boring	Core Barrel:	BX
Boring Location:	22+74.1, 56.0 Rt.	Casing ID/OD:	NW	Water Level*:	Water Boring
Hammer Efficiency Factor: 0.84		Hammer Type:	Automatic ☒ Hydraulic ☐ Rope & Cathead ☐		

Definitions:
D = Split Spoon Sample
MD = Unsuccessful Split Spoon Sample attempt
U = Thin Wall Tube Sample
MU = Unsuccessful Thin Wall Tube Sample attempt
V = Insitu Vane Shear Test, PP = Pocket Penetrometer
MV = Unsuccessful Insitu Vane Shear Test attempt

R = Rock Core Sample
SSA = Solid Stem Auger
HSA = Hollow Stem Auger
RC = Roller Cone
WOH = weight of 140lb. hammer
WOR/C = weight of rods or casing
WO1P = Weight of one person

S_u = Insitu Field Vane Shear Strength (psf)
T_v = Pocket Torvane Shear Strength (psf)
q_p = Unconfined Compressive Strength (ksf)
N-uncorrected = Raw field SPT N-value
Hammer Efficiency Factor = Annual Calibration Value
N_{60} = SPT N-uncorrected corrected for hammer efficiency
N_{60} = (Hammer Efficiency Factor/60%)*N-uncorrected

$S_{u(lab)}$ = Lab Vane Shear Strength (psf)
WC = water content, percent
LL = Liquid Limit
PL = Plastic Limit
PI = Plasticity Index
G = Grain Size Analysis
C = Consolidation Test

Depth (ft.)	Sample No.	Pen./Rec. (in.)	Sample Depth (ft.)	Blows (/6 in.) Shear Strength (psf) or RQD (%)	N-uncorrected	N_{60}	Casing Blows	Elevation (ft.)	Graphic Log	Visual Description and Remarks	Laboratory Testing Results/ AASHTO and Unified Class
75							173				
							238				
							189				
							189	182.00		b150 blows for 0.1'. 79.10	
	R1	21.6/5	79.10 - 80.90	RQD = N/A%			b150 BX			Bedrock: Pink, medium grained, muscovite-biotite GRANITE. R1:Core Times (min:sec) 79.1-80.9' (20:00) 23% Recovery Casing broke, could not get back down.	
80								180.20		80.90 Bottom of Exploration at 80.90 feet below ground surface.	
85											
90											
95											
100											

Remarks:
Raft Boring, 8.8' from Deck to Ground.
400-500# down pressure on Core Barrel.

Stratification lines represent approximate boundaries between soil types; transitions may be gradual.
* Water level readings have been made at times and under conditions stated. Groundwater fluctuations may occur due to conditions other than those present at the time measurements were made.

Page 2 of 2
Boring No.: RWB-NBB-401

STATE OF MAINE
DEPARTMENT OF TRANSPORTATION

BH-A106(000)

PIN 11060.00
BRIDGE NO. 2047
BRIDGE PLANS

		BY	DATE
PROJ. MANAGER	J. Wentworth		
DESIGN-DETAILED	K.MAGUIRE	T.WHITE	JULY 2010
CHECKED-REVIEWED	-----	-----	-----
DESIGN2-DETAILED2	-----	--	-----
DESIGN3-DETAILED3	-----	-----	-----
REVISIONS 1	------		
REVISIONS 2	------		
REVISIONS 3	------		
REVISIONS 4	------		
FIELD CHANGES	------		

SIGNATURE
P.E. NUMBER
DATE

NAPLES BAY BRIDGE
CHUTES RIVER
NAPLES   CUMBERLAND COUNTY

BORING LOGS

SHEET NUMBER
128
OF 160

Filename: ...\MSTA\129_BORING LOGS4.dgn Division: BRIDGE Username: dana.damren Date:7/20/2010

Maine Department of Transportation — Soil/Rock Exploration Log — US CUSTOMARY UNITS

Project: Naples Bay Bridge #2047 over Chutes River carrying Route 302
Location: Naples, Maine
Boring No.: RWB-NBB-402 PIN: 11060.00

Driller:	MaineDOT	Elevation (ft.)	260.6	Auger ID/OD:	N/A
Operator:	Giguere/Giles/Wright	Datum:	NAVD88	Sampler:	Standard Split Spoon
Logged By:	B. Wilder	Rig Type:	CME 45C	Hammer Wt./Fall:	140#/30"
Date Start/Finish:	10/12/09-10/13/09	Drilling Method:	Cased Wash Boring	Core Barrel:	NQ-2"
Boring Location:	24+59.1, 62.5 Rt.	Casing ID/OD:	NW	Water Level*:	Water Boring
Hammer Efficiency Factor: 0.84		Hammer Type:	Automatic ☒ Hydraulic ☐ Rope & Cathead ☐		

Definitions: D = Split Spoon Sample; MD = Unsuccessful Split Spoon Sample attempt; U = Thin Wall Tube Sample; MU = Unsuccessful Thin Wall Tube Sample attempt; V = Insitu Vane Shear Test, PP = Pocket Penetrometer; MV = Unsuccessful Insitu Vane Shear Test attempt; R = Rock Core Sample; SSA = Solid Stem Auger; HSA = Hollow Stem Auger; RC = Roller Cone; WOH = weight of 140lb. hammer; WOR/C = weight of rods or casing; WO1P = Weight of one person; S_u = Insitu Field Vane Shear Strength (psf); T_v = Pocket Torvane Shear Strength (psf); q_p = Unconfined Compressive Strength (ksf); N-uncorrected = Raw field SPT N-value; Hammer Efficiency Factor = Annual Calibration Value; N_{60} = SPT N-uncorrected corrected for hammer efficiency; N_{60} = (Hammer Efficiency Factor/60%)*N-uncorrected; $S_{u(lab)}$ = Lab Vane Shear Strength (psf); WC = water content, percent; LL = Liquid Limit; PL = Plastic Limit; PI = Plasticity Index; G = Grain Size Analysis; C = Consolidation Test

Depth (ft.)	Sample No.	Pen./Rec. (in.)	Sample Depth (ft.)	Blows (/6 in.) Shear Strength (psf) or RQD (%)	N-uncorrected	N_{60}	Casing Blows	Elevation (ft.)	Graphic Log	Visual Description and Remarks	Laboratory Testing Results/ AASHTO and Unified Class
0	1D	24/14	0.00 - 2.00	6/6/7/6	13	18	2			Grey, wet, medium dense, fine to medium SAND, little silt.	
							10				
							11				
							14				
							18				
5							ºHP			ºHP = Hydraulic Push	
							16				
							18				
							21				
							22				
10	2D	24/16	10.00 - 12.00	1/1/WOH/WOH	1	1	21	250.60		10.00 Grey, wet, very loose, silty fine SAND, little clay, slightly plastic.	
							4				
							20				
							16				
							22				
15							28				
							20				
							17				
							18	242.60		18.00	
							19				
20	3D	24/14	20.00 - 22.00	WOH/WOH/2/2	2	3	19			Grey-Brown, wet, very loose, fine SAND, trace silt.	
							9				
							16				
							20				
							28				
25							42				
							57				
							68				
							75				
							103				
30	4D	24/15	30.00 - 32.00	WOH/3/4/4	7	10	107			Similar to above, except loose.	
							54				
							54				
							81				
							70				
35							111				
							76	224.60		36.00	
							78				
							78				
							78				
40							116				
	5D R1	3.6/3.6 116.4/30	41.00 - 41.30 41.30 - 51.00	50(3.6")	---		NQ-2	219.30		Brown, wet, very dense, fine to medium SAND, trace silt. 41.30 Granite BOULDER from 41.3-43.8' bgs.	
								216.80		43.80 Brown, wet, very dense fine to medium SAND, trace silt.	
45											
50								209.60		51.00 Bottom of Exploration at 51.00 feet below ground surface. Could not get casing through Boulder, moved to RWB-NB-402A.	
55											
60											
65											
70											
75											

Remarks:

Raft Boring, 9.0' from Deck to Ground.
400-500# down pressure on Core Barrel.

Stratification lines represent approximate boundaries between soil types; transitions may be gradual.

* Water level readings have been made at times and under conditions stated. Groundwater fluctuations may occur due to conditions other than those present at the time measurements were made.

Page 1 of 1 Boring No.: RWB-NBB-402

Maine Department of Transportation — Soil/Rock Exploration Log — US CUSTOMARY UNITS

Project: Naples Bay Bridge #2047 over Chutes River carrying Route 302
Location: Naples, Maine
Boring No.: RWB-NBB-402A PIN: 11060.00

Driller:	MaineDOT	Elevation (ft.)	260.6	Auger ID/OD:	N/A
Operator:	Giguere/Giles/Wright	Datum:	NAVD88	Sampler:	Standard Split Spoon
Logged By:	B. Wilder	Rig Type:	CME 45C	Hammer Wt./Fall:	140#/30"
Date Start/Finish:	10/13/09-10/14/09	Drilling Method:	Cased Wash Boring	Core Barrel:	NQ-2"
Boring Location:	24+53.2, 62.5 Rt.	Casing ID/OD:	NW	Water Level*:	Water Boring
Hammer Efficiency Factor: 0.84		Hammer Type:	Automatic ☒ Hydraulic ☐ Rope & Cathead ☐		

Definitions: (as above)

Depth (ft.)	Sample No.	Pen./Rec. (in.)	Sample Depth (ft.)	Blows (/6 in.) Shear Strength (psf) or RQD (%)	N-uncorrected	N_{60}	Casing Blows	Elevation (ft.)	Graphic Log	Visual Description and Remarks	Laboratory Testing Results/ AASHTO and Unified Class
40							102			Drove Casing to 40.0' bgs, started Bore Hole.	
							138				
							126				
							134				
							162				
45							180				
							164				
							136				
							128				
							166				
50	1D	24/17	50.00 - 52.00	5/5/5/5	10	14	112			Brown, wet, medium dense, fine to medium SAND, trace silt.	
							131				
							124				
							119				
							135				
55							138				
							138				
							173				
							170				
							173				
60	2D	24/18	60.00 - 62.00	5/6/5/5	11	15	75			Similar to above.	
							76				
							79				
							118				
							126				
65							131				
							137				
							139				
							163				
							169				
70	3D	24/17	70.00 - 72.00	WOH/WOH/2/4	2	3	86			Similar to above, except very loose.	
							120				
							130				
							152				
							175				
75							224				
							225				
							237			Grey in wash water from 77.0-80.0' bgs.	
							239				
							360				
80	R1	45.6/42	80.00 - 83.80	RQD = 0%			NQ-2	180.60		80.00 Top of Bedrock at Elev. 180.6'. Bedrock: Pink, medium grained, muscovite-biotite GRANITE. R1:Core Times (min:sec) 80.0-81.0' (3:00) 81.0-82.0' (2:40) 82.0-83.0' (4:40) 83.0-83.8' (8:43) 92% Recovery Core Blocked.	
								176.80		83.80 Bottom of Exploration at 83.80 feet below ground surface.	
85											
90											

Remarks:

Raft Boring, 9.3' from Deck to Ground.
400-500# down pressure on Core Barrel.

Stratification lines represent approximate boundaries between soil types; transitions may be gradual.

* Water level readings have been made at times and under conditions stated. Groundwater fluctuations may occur due to conditions other than those present at the time measurements were made.

Page 1 of 1 Boring No.: RWB-NBB-402A

Maine Department of Transportation — Soil/Rock Exploration Log — US CUSTOMARY UNITS

Project: Naples Bay Bridge #2047 over Chutes River carrying Route 302
Location: Naples, Maine
Boring No.: RWB-NBB-403 PIN: 11060.00

Driller:	MaineDOT	Elevation (ft.)	262.7	Auger ID/OD:	N/A
Operator:	Giguere/Giles/Wright	Datum:	NAVD88	Sampler:	Standard Split Spoon
Logged By:	B. Wilder	Rig Type:	CME 45C	Hammer Wt./Fall:	140#/30"
Date Start/Finish:	10/15,16,19/09	Drilling Method:	Cased Wash Boring	Core Barrel:	NQ-2"
Boring Location:	26+74.7, 70.0 Rt.	Casing ID/OD:	NW	Water Level*:	Water Boring
Hammer Efficiency Factor: 0.84		Hammer Type:	Automatic ☒ Hydraulic ☐ Rope & Cathead ☐		

Definitions: (as above)

Depth (ft.)	Sample No.	Pen./Rec. (in.)	Sample Depth (ft.)	Blows (/6 in.) Shear Strength (psf) or RQD (%)	N-uncorrected	N_{60}	Casing Blows	Elevation (ft.)	Graphic Log	Visual Description and Remarks	Laboratory Testing Results/ AASHTO and Unified Class
0							6				
							15				
							18				
	1D	24/14	3.00 - 5.00	2/3/3/2	6	8	2			Grey, wet, loose, fine SAND, trace silt.	
							5				
5							6				
							8				
							8				
							13				
							9				
10							8				
							11	251.70		11.00	
							10				
	2D	24/12	13.00 - 15.00	WOR/WOR/1/WOR	1	1	2			Grey, wet, very loose, fine SAND, little silt.	
							7				
15							10				
							4				
							5				
							8				
							8				
20							9				
							12	241.70		21.00	
							13				
	3D	24/17	23.00 - 25.00	WOH/WOH/WOH/2	---		15			Grey, wet, very loose, silty fine SAND.	
							12				
25							15				
							17				
							17				
							12				
							17				
30							20				
							32				
							49	230.20		32.50	
	4D	24/18	33.00 - 35.00	3/4/3/4	7	10	44			Grey, wet, stiff, sandy-SILT, little clay, slightly plastic.	
							47				
35							48				
							47				
							42				
							36				
							38				
40							37				
							35	221.70		41.00	
							35				
	5D	24/20	43.00 - 45.00	WOH/WOH/2/3	2	3	45			Grey, wet, very loose, fine to medium SAND, trace silt.	
							40				
45							46				
							78				
							76				
							70				
							106	213.70		49.00	
50							99				
							124				
							133				
	6D	24/18	53.00 - 55.00	WOR/1/2/4	3	4	84			Brown, wet, very loose, fine to medium SAND, trace silt.	
							77				
55							119				
							117				
							128				
							124				
							112				
60							117				
							118				
							134	200.70		62.00	
	7D	24/19	63.00 - 65.00	WOR/4/5/9	9	13	108			Brown, wet, medium dense, fine to coarse SAND, trace silt.	
							127				
65							132				
							137				
							129				
							110				
							128				
70							128				
							128				
							150				
	8D	24/18	73.00 - 75.00	4/5/10/17	15	21	146			Similar to above.	
							122				

Remarks:

Raft Boring, 7.0' from Deck to Ground.
400-500# down pressure on Core Barrel.

Stratification lines represent approximate boundaries between soil types; transitions may be gradual.

* Water level readings have been made at times and under conditions stated. Groundwater fluctuations may occur due to conditions other than those present at the time measurements were made.

Page 1 of 2 Boring No.: RWB-NBB-403

Maine Department of Transportation — Soil/Rock Exploration Log — US CUSTOMARY UNITS

Project: Naples Bay Bridge #2047 over Chutes River carrying Route 302
Location: Naples, Maine
Boring No.: RWB-NBB-403 PIN: 11060.00

Driller:	MaineDOT	Elevation (ft.)	262.7	Auger ID/OD:	N/A
Operator:	Giguere/Giles/Wright	Datum:	NAVD88	Sampler:	Standard Split Spoon
Logged By:	B. Wilder	Rig Type:	CME 45C	Hammer Wt./Fall:	140#/30"
Date Start/Finish:	10/15,16,19/09	Drilling Method:	Cased Wash Boring	Core Barrel:	NQ-2"
Boring Location:	26+74.7, 70.0 Rt.	Casing ID/OD:	NW	Water Level*:	Water Boring
Hammer Efficiency Factor: 0.84		Hammer Type:	Automatic ☒ Hydraulic ☐ Rope & Cathead ☐		

Definitions: (as above)

Depth (ft.)	Sample No.	Pen./Rec. (in.)	Sample Depth (ft.)	Blows (/6 in.) Shear Strength (psf) or RQD (%)	N-uncorrected	N_{60}	Casing Blows	Elevation (ft.)	Graphic Log	Visual Description and Remarks	Laboratory Testing Results/ AASHTO and Unified Class
75							124				
							131				
							125	184.70		78.00	
							342				
							328				
80							173				
							170				
							184				
	9D	24/14	83.00 - 85.00	2/2/32/20	34	48	117			Light brown, wet, dense, fine to medium SAND, trace silt, trace gravel.	
							136				
85							166				
							240				
							334				
							242				
							221				
90							330			ª869 blows for 0.7'.	
	R1	93.6/60	91.70 - 99.50	RQD = 36%			ª869 NQ-2	171.00		91.70 R1: BOULDERS and COBBLES. R1:Core Times (min:sec) 91.7-92.7' (2:58) 92.7-93.7' (2:53) 93.7-94.7' (0:15) 94.7-95.7' (0:45) 95.7-96.7' (1:39) 96.7-97.7' (1:15)	
95											
								165.20		97.50 Top of Bedrock at Elev. 165.2'. Bedrock: Pink, medium grained, muscovite-biotite GRANITE. R1:Core Times (min:sec) cont. 97.7-98.7' (2:30) 98.7-99.5' (2:15) 64% Recovery Core Blocked	
								163.20		99.50 Bottom of Exploration at 99.50 feet below ground surface.	
100											
105											
110											
115											
120											
125											

Remarks:

Raft Boring, 7.0' from Deck to Ground.
400-500# down pressure on Core Barrel.

Stratification lines represent approximate boundaries between soil types; transitions may be gradual.

* Water level readings have been made at times and under conditions stated. Groundwater fluctuations may occur due to conditions other than those present at the time measurements were made.

Page 2 of 2 Boring No.: RWB-NBB-403

STATE OF MAINE
DEPARTMENT OF TRANSPORTATION
BH-A106(000)
BRIDGE NO. 2047
PIN 11060.00
BRIDGE PLANS

		BY	DATE
PROJ. MANAGER	J. Wentworth		
DESIGN-DETAILED	K.MAGUIRE	T.WHITE	JULY 2010
CHECKED-REVIEWED			
DESIGN2-DETAILED2			
DESIGN3-DETAILED3			
REVISIONS 1			
REVISIONS 2			
REVISIONS 3			
REVISIONS 4			
FIELD CHANGES			

SIGNATURE
P.E. NUMBER
DATE

NAPLES BAY BRIDGE
CHUTES RIVER
NAPLES CUMBERLAND COUNTY
BORING LOGS

SHEET NUMBER
129
OF 160

Date:7/20/2010 Username: dana.damren Division: BRIDGE Filename: ...\MSTA\130_BORING LOGS5.dgn

Maine Department of Transportation
Soil/Rock Exploration Log
US CUSTOMARY UNITS

Project: Naples Bay Bridge #2047 over Chutes River carrying Route 302	Location: Naples, Maine	Boring No.: RWB-NBB-404	PIN: 11060.00
Driller: MaineDOT	Elevation (ft.) 263.3	Auger ID/OD: N/A	
Operator: Giguere/Giles/Wright	Datum: NAVD88	Sampler: Standard Split Spoon	
Logged By: B. Wilder	Rig Type: CME 45C	Hammer Wt./Fall: 140#/30"	
Date Start/Finish: 10/15,16,19/09	Drilling Method: Cased Wash Boring	Core Barrel: NQ-2"	
Boring Location: 28+75.1, 63.0 Rt.	Casing ID/OD: NW	Water Level*: Water Boring	
Hammer Efficiency Factor: 0.84	Hammer Type: Automatic ☒ Hydraulic ☐ Rope & Cathead ☐		

Definitions:
D = Split Spoon Sample
MD = Unsuccessful Split Spoon Sample attempt
U = Thin Wall Tube Sample
MU = Unsuccessful Thin Wall Tube Sample attempt
V = Insitu Vane Shear Test, PP = Pocket Penetrometer
MV = Unsuccessful Insitu Vane Shear Test attempt
R = Rock Core Sample
SSA = Solid Stem Auger
HSA = Hollow Stem Auger
RC = Roller Cone
WOH = weight of 140lb. hammer
WOR/C = weight of rods or casing
WO1P = Weight of one person
S_u = Insitu Field Vane Shear Strength (psf)
T_v = Pocket Torvane Shear Strength (psf)
q_p = Unconfined Compressive Strength (ksf)
N-uncorrected = Raw field SPT N-value
Hammer Efficiency Factor = Annual Calibration Value
N_{60} = SPT N-uncorrected corrected for hammer efficiency
N_{60} = (Hammer Efficiency Factor/60%)*N-uncorrected
$S_{u(lab)}$ = Lab Vane Shear Strength (psf)
WC = water content, percent
LL = Liquid Limit
PL = Plastic Limit
PI = Plasticity Index
G = Grain Size Analysis
C = Consolidation Test

Depth (ft.)	Sample No.	Pen./Rec. (in.)	Sample Depth (ft.)	Blows (/6 in.) Shear Strength (psf) or RQD (%)	N-uncorrected	N_{60}	Casing Blows	Elevation (ft.)	Graphic Log	Visual Description and Remarks	Laboratory Testing Results/ AASHTO and Unified Class
0							16				
							11				
							14				
	1D	24/18	3.00 - 5.00	3/3/3/4	6	8	2			Grey-Brown, wet, loose, fine to medium SAND, little silt.	
							5				
5							6				
							7				
							7				
							9				
							7				
10							10	253.30		10.00	
							10				
							10				
	2D	24/14	13.00 - 15.00	WOH/WOH/2/2	2	3	3			Light grey, wet, very loose, fine SAND, trace silt.	
							7				
15							7				
							10				
							8				
							17				
							15				
20							12				
							21				
							23				
	3D	24/14	23.00 - 25.00	WOH/1/2/4	3	4	15			Grey, wet, very loose, fine SAND, trace silt.	
							9				
25							12				
							15				
							16				
							14				
							22				
30							22				
							36	232.30		31.00	
							45				
	4D	24/20	33.00 - 35.00	WOR/WOR/WOH/WOH	---		24			Grey, wet, very soft, sandy SILT, little clay, slightly plastic.	
							20				
35							33				
							88				
							111	226.30		37.00	
							117				
							117				
40							120				
							108				
							107				
	5D	24/20	43.00 - 45.00	3/7/15/18	22	31	52			Brown, wet, dense, fine to medium SAND, trace silt.	
							58				
45							77				
							112				
							122				
							120				
							128				
50											

Remarks:
Raft Boring, 6.8' from Deck to Ground.
400-500# down pressure on Core Barrel.

Stratification lines represent approximate boundaries between soil types; transitions may be gradual.
* Water level readings have been made at times and under conditions stated. Groundwater fluctuations may occur due to conditions other than those present at the time measurements were made.

Maine Department of Transportation
Soil/Rock Exploration Log
US CUSTOMARY UNITS

Project: Naples Bay Bridge #2047 over Chutes River carrying Route 302	Location: Naples, Maine	Boring No.: RWB-NBB-404	PIN: 11060.00
Driller: MaineDOT	Elevation (ft.) 263.3	Auger ID/OD: N/A	
Operator: Giguere/Giles/Wright	Datum: NAVD88	Sampler: Standard Split Spoon	
Logged By: B. Wilder	Rig Type: CME 45C	Hammer Wt./Fall: 140#/30"	
Date Start/Finish: 10/15,16,19/09	Drilling Method: Cased Wash Boring	Core Barrel: NQ-2"	
Boring Location: 28+75.1, 63.0 Rt.	Casing ID/OD: NW	Water Level*: Water Boring	
Hammer Efficiency Factor: 0.84	Hammer Type: Automatic ☒ Hydraulic ☐ Rope & Cathead ☐		

Definitions:
D = Split Spoon Sample
MD = Unsuccessful Split Spoon Sample attempt
U = Thin Wall Tube Sample
MU = Unsuccessful Thin Wall Tube Sample attempt
V = Insitu Vane Shear Test, PP = Pocket Penetrometer
MV = Unsuccessful Insitu Vane Shear Test attempt
R = Rock Core Sample
SSA = Solid Stem Auger
HSA = Hollow Stem Auger
RC = Roller Cone
WOH = weight of 140lb. hammer
WOR/C = weight of rods or casing
WO1P = Weight of one person
S_u = Insitu Field Vane Shear Strength (psf)
T_v = Pocket Torvane Shear Strength (psf)
q_p = Unconfined Compressive Strength (ksf)
N-uncorrected = Raw field SPT N-value
Hammer Efficiency Factor = Annual Calibration Value
N_{60} = SPT N-uncorrected corrected for hammer efficiency
N_{60} = (Hammer Efficiency Factor/60%)*N-uncorrected
$S_{u(lab)}$ = Lab Vane Shear Strength (psf)
WC = water content, percent
LL = Liquid Limit
PL = Plastic Limit
PI = Plasticity Index
G = Grain Size Analysis
C = Consolidation Test

Depth (ft.)	Sample No.	Pen./Rec. (in.)	Sample Depth (ft.)	Blows (/6 in.) Shear Strength (psf) or RQD (%)	N-uncorrected	N_{60}	Casing Blows	Elevation (ft.)	Graphic Log	Visual Description and Remarks	Laboratory Testing Results/ AASHTO and Unified Class
50							131				
							123				
							128				
	6D	24/24	53.00 - 55.00	2/4/5/9	9	13	73			Light brown, wet, medium dense, fine to medium SAND, trace silt.	
							73				
55							116				
							115				
							124				
							124				
							134				
60							135				
							132				
							136				
	7D	24/22	63.00 - 65.00	WOR/WOR/3/5	3	4	69			Similar to above, except very loose.	
							73				
65							86				
							119				
							116				
							138				
							135				
70							138				
							167	192.30		71.00	
							171				
	8D	24/20	73.00 - 75.00	3/7/13/20	20	28	127			Brown, wet, medium dense, fine to coarse SAND, little gravel, trace silt.	
							138				
75							127				
							127				
							133				
							176				
							187				
80							350				
	R1	60/51	81.00 - 86.00	RQD = 43%			NQ-2	182.30		81.00 Top of Bedrock at Elev. 182.3'. Bedrock: Pink, medium grained, muscovite-biotite GRANITE. R1:Core Times not given. 85% Recovery	
85											
								177.30		86.00 Bottom of Exploration at 86.00 feet below ground surface.	
90											
95											
100											

Remarks:
Raft Boring, 6.8' from Deck to Ground.
400-500# down pressure on Core Barrel.

Stratification lines represent approximate boundaries between soil types; transitions may be gradual.
* Water level readings have been made at times and under conditions stated. Groundwater fluctuations may occur due to conditions other than those present at the time measurements were made.

Maine Department of Transportation
Soil/Rock Exploration Log
US CUSTOMARY UNITS

Project: Naples Bay Bridge #2047 over Chutes River carrying Route 302	Location: Naples, Maine	Boring No.: RWB-NBB-405	PIN: 11060.00
Driller: MaineDOT	Elevation (ft.) 265.5	Auger ID/OD: N/A	
Operator: Giguere/Giles/Wright	Datum: NAVD88	Sampler: Standard Split Spoon	
Logged By: B. Wilder	Rig Type: CME 45C	Hammer Wt./Fall: 140#/30"	
Date Start/Finish: 10/20/09-10/21/09	Drilling Method: Cased Wash Boring	Core Barrel: NQ-2"	
Boring Location: 31+04.9, 71.0 Rt.	Casing ID/OD: NW	Water Level*: Water Boring	
Hammer Efficiency Factor: 0.84	Hammer Type: Automatic ☒ Hydraulic ☐ Rope & Cathead ☐		

Definitions:
D = Split Spoon Sample
MD = Unsuccessful Split Spoon Sample attempt
U = Thin Wall Tube Sample
MU = Unsuccessful Thin Wall Tube Sample attempt
V = Insitu Vane Shear Test, PP = Pocket Penetrometer
MV = Unsuccessful Insitu Vane Shear Test attempt
R = Rock Core Sample
SSA = Solid Stem Auger
HSA = Hollow Stem Auger
RC = Roller Cone
WOH = weight of 140lb. hammer
WOR/C = weight of rods or casing
WO1P = Weight of one person
S_u = Insitu Field Vane Shear Strength (psf)
T_v = Pocket Torvane Shear Strength (psf)
q_p = Unconfined Compressive Strength (ksf)
N-uncorrected = Raw field SPT N-value
Hammer Efficiency Factor = Annual Calibration Value
N_{60} = SPT N-uncorrected corrected for hammer efficiency
N_{60} = (Hammer Efficiency Factor/60%)*N-uncorrected
$S_{u(lab)}$ = Lab Vane Shear Strength (psf)
WC = water content, percent
LL = Liquid Limit
PL = Plastic Limit
PI = Plasticity Index
G = Grain Size Analysis
C = Consolidation Test

Depth (ft.)	Sample No.	Pen./Rec. (in.)	Sample Depth (ft.)	Blows (/6 in.) Shear Strength (psf) or RQD (%)	N-uncorrected	N_{60}	Casing Blows	Elevation (ft.)	Graphic Log	Visual Description and Remarks	Laboratory Testing Results/ AASHTO and Unified Class
0							5				
							10				
							24				
							32				
							40				
5							32				
							30				
							33				
							31				
							32				
10	1D	24/18	10.00 - 12.00	1/2/3/3	5	7	9			Grey brown, wet, loose, fine SAND, little silt.	
							13				
							11				
							14				
							11				
15							31				
							27				
							21				
							21				
							25				
20	2D	24/16	20.00 - 22.00	WOR/WOH/1/3	1	1	24			Similar to above, except very loose.	
							27				
							30				
							25				
							25				
25							24				
							33				
							39				
							52				
							58				
30	3D	24/13	30.00 - 32.00	WOH/1/2/3	3	4	26			Similar to above.	
							28				
							39				
							56				
							60				
35							69				
							72				
							90	228.50		37.00	
							112				
							108				
40	4D	24/6	40.00 - 42.00	2/4/4/6	8	11	40			Brown, wet, medium dense, fine to coarse SAND, little gravel, trace silt.	
							56				
							62				
							60				
							63				
45							63				
							70				
							70				
							72				
							84				
50	5D	24/8	50.00 - 52.00	1/3/6/12	9	13	88			Similar to above.	
							74				
							75				
							82				
							112				
55							138				
							181	209.50		56.00	
							190				
							226				
							227				
60	6D	10.8/10.8	60.00 - 60.90	4/50(4.8")	---		200			Grey, wet, very dense, gravelly fine to coarse SAND, trace silt. [a]200 blows for 0.5'.	
	R1	72/32	61.50 - 67.50				[a]200 NQ-2	204.00		61.50 R1:BOULDERS and COBBLES. R1:Core Times (min:sec) 61.5-62.5' (4:14) 62.5-63.5' (1:20) 63.5-64.5' (0:30) 64.5-65.5' (2:00) 65.5-66.5' (3:43) 66.5-67.5' (3:50) 44% Recovery Could not get back down.	
65											
								198.00		67.50 Bottom of Exploration at 67.50 feet below ground surface.	
70											
75											

Remarks:
Raft Boring, 4.8' from Deck to Ground.
400-500# down pressure on Core Barrel.

Stratification lines represent approximate boundaries between soil types; transitions may be gradual.
* Water level readings have been made at times and under conditions stated. Groundwater fluctuations may occur due to conditions other than those present at the time measurements were made.

STATE OF MAINE
DEPARTMENT OF TRANSPORTATION
BRIDGE PLANS
BH-A106(000)
BRIDGE NO. 2047
PIN 11060.00

	BY	DATE
PROJ. MANAGER	J. Wentworth	
DESIGN-DETAILED	K.MAGUIRE	
CHECKED-REVIEWED	-----	
DESIGN2-DETAILED2	-----	
DESIGN3-DETAILED3	-----	
REVISIONS 1	-----	-----
REVISIONS 2	-----	-----
REVISIONS 3	-----	-----
REVISIONS 4	-----	-----
FIELD CHANGES	-----	-----

BY	DATE
T.WHITE	JULY 2010

SIGNATURE
P.E. NUMBER
DATE

NAPLES BAY BRIDGE
CHUTES RIVER
NAPLES CUMBERLAND COUNTY

BORING LOGS

SHEET NUMBER
130
OF 160

Filename: ...\MSTA\131_BORING LOGS6.dgn   Division: BRIDGE   Username: dana.damren   Date:7/20/2010

Maine Department of Transportation

Soil/Rock Exploration Log

US CUSTOMARY UNITS

Project:	Naples Bay Bridge #2047 over Chutes River carrying Route 302	Location:	Naples, Maine	Boring No.:	RWB-NBB-406
				PIN:	11060.00
Driller:	MaineDOT	Elevation (ft.)	273.1	Auger ID/OD:	5" Solid StemID
Operator:	Giguere/Giles/Wright	Datum:	NAVD88	Sampler:	Standard Split Spoon
Logged By:	B. Wilder	Rig Type:	CME 45C	Hammer Wt./Fall:	140#/30"
Date Start/Finish:	10/22,23,26/09	Drilling Method:	Cased Wash Boring	Core Barrel:	NQ-2"
Boring Location:	32+45, 52.0 Rt.	Casing ID/OD:	NW	Water Level*:	None Observed
Hammer Efficiency Factor: 0.84		Hammer Type:	Automatic ☒ Hydraulic ☐ Rope & Cathead ☐		

Definitions:
D = Split Spoon Sample
MD = Unsuccessful Split Spoon Sample attempt
U = Thin Wall Tube Sample
MU = Unsuccessful Thin Wall Tube Sample attempt
V = Insitu Vane Shear Test, PP = Pocket Penetrometer
MV = Unsuccessful Insitu Vane Shear Test attempt
R = Rock Core Sample
SSA = Solid Stem Auger
HSA = Hollow Stem Auger
RC = Roller Cone
WOH = weight of 140lb. hammer
WOR/C = weight of rods or casing
WO1P = Weight of one person
S_u = Insitu Field Vane Shear Strength (psf)
T_v = Pocket Torvane Shear Strength (psf)
q_p = Unconfined Compressive Strength (ksf)
N-uncorrected = Raw field SPT N-value
Hammer Efficiency Factor = Annual Calibration Value
N_{60} = SPT N-uncorrected corrected for hammer efficiency
N_{60} = (Hammer Efficiency Factor/60%)*N-uncorrected
$S_{u(lab)}$ = Lab Vane Shear Strength (psf)
WC = water content, percent
LL = Liquid Limit
PL = Plastic Limit
PI = Plasticity Index
G = Grain Size Analysis
C = Consolidation Test

Depth (ft.)	Sample No.	Pen./Rec. (in.)	Sample Depth (ft.)	Blows (/6 in.) Shear Strength (psf) or RQD (%)	N-uncorrected	N_{60}	Casing Blows	Elevation (ft.)	Graphic Log	Visual Description and Remarks	Laboratory Testing Results/ AASHTO and Unified Class.
0	1D	24/20	0.00 - 2.00	3/6/3/3	9	13	SSA			Brown, damp, medium dense, fine to coarse SAND, trace silt, (Fill).	
5										Cobble from 5.0-5.8' bgs.	
								266.10		7.00	
10	2D	24/18	10.00 - 12.00	9/9/7/6	16	22	31			Light brown, wet, medium dense, fine SAND, little silt.	
							24				
							18				
							18				
							18				
15							40				
							33				
							32				
							36				
							30				
20	3D	24/1	20.00 - 22.00	4/4/3/4	7	10	14			Similar to above but loose.	
							14				
							23				
							29				
							25				
25							43				
							49				
							62				
							75				
							81				
30	4D	24/12	30.00 - 32.00	WOH/1/3/5	4	6	33			Similar to above.	
							46				
							67				
							78				
							92				
35							107				
							85				
							120				
							121				
							114				
40	5D	24/20	40.00 - 42.00	WOR/1/3/5	4	6	70			Similar to above.	
							70				
							81				
							122				
							117				
45							142				
							127				
							127				
							135				
							126				
50	6D	24/18	50.00 - 52.00	4/6/6/12	12	17	85			Similar to above, except medium dense.	
							79				
							108				
							112				
							119	219.10		54.00	
55							117				
							124				
							124				
							127				
							134				
60	7D	24/8	60.00 - 62.00	3/4/3/6	7	10	116			Light brown, wet, loose, fine to coarse SAND, little gravel, trace silt.	
							117				
							130				
							119				
							139				
65							126				
							130				
							125				
							131			3.0' running sand up Casing.	
							164				
70	8D	24/18	70.00 - 72.00	5/5/6/18	11	15	135			Similar to above, except medium dense.	
							134				
							162				
							186				
							191				
75											

Remarks:

100# down pressure on Core Barrel.

Stratification lines represent approximate boundaries between soil types; transitions may be gradual.

* Water level readings have been made at times and under conditions stated. Groundwater fluctuations may occur due to conditions other than those present at the time measurements were made.

Maine Department of Transportation

Soil/Rock Exploration Log

US CUSTOMARY UNITS

Project:	Naples Bay Bridge #2047 over Chutes River carrying Route 302	Location:	Naples, Maine	Boring No.:	RWB-NBB-406
				PIN:	11060.00
Driller:	MaineDOT	Elevation (ft.)	273.1	Auger ID/OD:	5" Solid StemID
Operator:	Giguere/Giles/Wright	Datum:	NAVD88	Sampler:	Standard Split Spoon
Logged By:	B. Wilder	Rig Type:	CME 45C	Hammer Wt./Fall:	140#/30"
Date Start/Finish:	10/22,23,26/09	Drilling Method:	Cased Wash Boring	Core Barrel:	NQ-2"
Boring Location:	32+45, 52.0 Rt.	Casing ID/OD:	NW	Water Level*:	None Observed
Hammer Efficiency Factor: 0.84		Hammer Type:	Automatic ☒ Hydraulic ☐ Rope & Cathead ☐		

Definitions:
D = Split Spoon Sample
MD = Unsuccessful Split Spoon Sample attempt
U = Thin Wall Tube Sample
MU = Unsuccessful Thin Wall Tube Sample attempt
V = Insitu Vane Shear Test, PP = Pocket Penetrometer
MV = Unsuccessful Insitu Vane Shear Test attempt
R = Rock Core Sample
SSA = Solid Stem Auger
HSA = Hollow Stem Auger
RC = Roller Cone
WOH = weight of 140lb. hammer
WOR/C = weight of rods or casing
WO1P = Weight of one person
S_u = Insitu Field Vane Shear Strength (psf)
T_v = Pocket Torvane Shear Strength (psf)
q_p = Unconfined Compressive Strength (ksf)
N-uncorrected = Raw field SPT N-value
Hammer Efficiency Factor = Annual Calibration Value
N_{60} = SPT N-uncorrected corrected for hammer efficiency
N_{60} = (Hammer Efficiency Factor/60%)*N-uncorrected
$S_{u(lab)}$ = Lab Vane Shear Strength (psf)
WC = water content, percent
LL = Liquid Limit
PL = Plastic Limit
PI = Plasticity Index
G = Grain Size Analysis
C = Consolidation Test

Depth (ft.)	Sample No.	Pen./Rec. (in.)	Sample Depth (ft.)	Blows (/6 in.) Shear Strength (psf) or RQD (%)	N-uncorrected	N_{60}	Casing Blows	Elevation (ft.)	Graphic Log	Visual Description and Remarks	Laboratory Testing Results/ AASHTO and Unified Class.
75							237				
							216				
							129				
							183				
							228				
80	9D	24/12	80.00 - 82.00	1/3/5/5	8	11	118			Similar to above.	
							126				
							125				
							120				
							162				
85							163				
							130				
							227				
							227				
							272				
90	10D	24/4	90.00 - 92.00	1/3/5/6	8	11	173			Similar to above.	
							170				
							177				
							217				
							225				
95							222				
							175				
							244				
							230				
							294				
100	11D	24/1	100.00 - 102.00	3/3/8/19	11	15	131			Similar to above, except medium dense.	
							180				
							115				
							242				
	R1	40.8/28	104.20 - 107.60				a200 NQ-2	168.90		a200 blows for 0.2'. 104.20 R1: BOULDERS and COBBLES. R1:Core Times (min:sec) 104.2-105.2' (1:39) 105.2-106.2' (3:05) 106.2-107.2' (2:20) 107.2-107.6' (1:08) 68% Recovery Could not get back down.	
105											
								165.50		107.60 Bottom of Exploration at 107.60 feet below ground surface.	
110											
115											
120											
125											

Remarks:

100# down pressure on Core Barrel.

Stratification lines represent approximate boundaries between soil types; transitions may be gradual.

* Water level readings have been made at times and under conditions stated. Groundwater fluctuations may occur due to conditions other than those present at the time measurements were made.

STATE OF MAINE
DEPARTMENT OF TRANSPORTATION

BH-A106(000)

BRIDGE NO. 2047

PIN 11060.00

BRIDGE PLANS

PROJ. MANAGER	J. Wentworth	BY	DATE
DESIGN-DETAILED	K.MAGUIRE	T.WHITE	JULY 2010
CHECKED-REVIEWED	-----	-----	-----
DESIGN2-DETAILED2	-----	--	-----
DESIGN3-DETAILED3	-----	-----	-----
REVISIONS 1	-----		-----
REVISIONS 2	-----		-----
REVISIONS 3	-----		-----
REVISIONS 4	-----		-----
FIELD CHANGES	-----		-----

SIGNATURE

P.E. NUMBER

DATE

NAPLES BAY BRIDGE
CHUTES RIVER
NAPLES CUMBERLAND COUNTY

BORING LOGS

SHEET NUMBER

131

OF 160

SHEET PILE WALL NOTES

1. At the option of the Contractor, granular borrow placed under water may be substituted with crushed stone meeting the requirements of Subsection 703.31. Crushed stone shall be separated from other backfill material using erosion control geotextile meeting the requirements of Subsection 722.03. Payment for crushed stone so substituted will be made under Item No. 203.05, Granular Borrow. Payment for geotextile will be considered incidental to the same pay item.

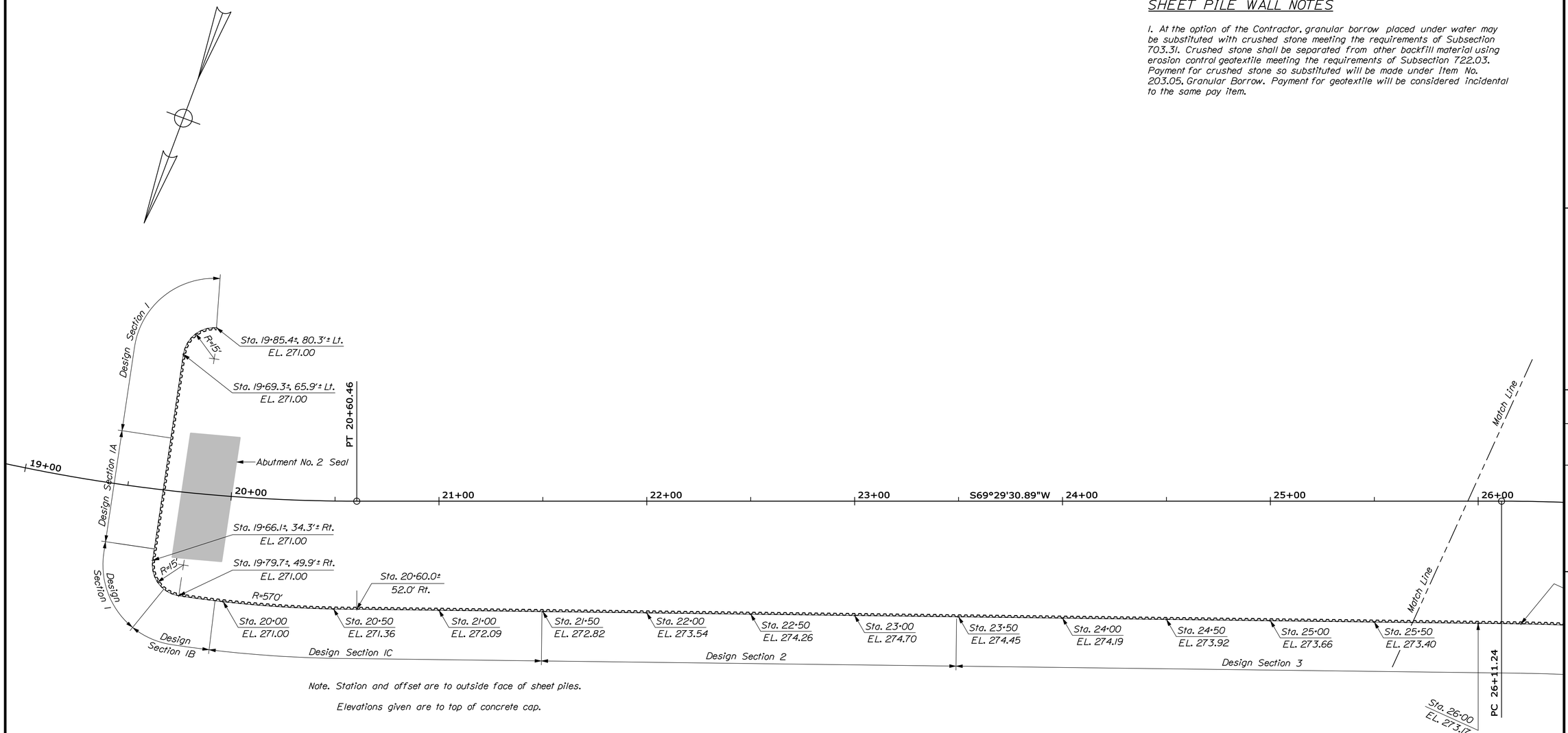

Note. Station and offset are to outside face of sheet piles.

Elevations given are to top of concrete cap.

STATE OF MAINE
DEPARTMENT OF TRANSPORTATION

BH-A106(000)

PIN **11060.00**

BRIDGE NO. 2047

BRIDGE PLANS

	BY	DATE
PROJ. MANAGER	J. Wentworth	
DESIGN-DETAILED	D. Shaw	July 2010
CHECKED-REVIEWED	J. Folsom	------
DESIGN2-DETAILED2	-----	------
DESIGN3-DETAILED3	-----	------
REVISIONS 1	-----	------
REVISIONS 2	-----	------
REVISIONS 3	-----	------
REVISIONS 4	-----	------
FIELD CHANGES	-----	------

SIGNATURE

P.E. NUMBER

DATE

NAPLES BAY BRIDGE
CHUTES RIVER
CUMBERLAND COUNTY
NAPLES

SHEET PILE WALL LAYOUT

SHEET NUMBER

132

OF 160

Filename: ...\132_Sheet_Pile_Wall_Layout.dgn Division: BRIDGE Username: dona.damren Date:7/26/2010

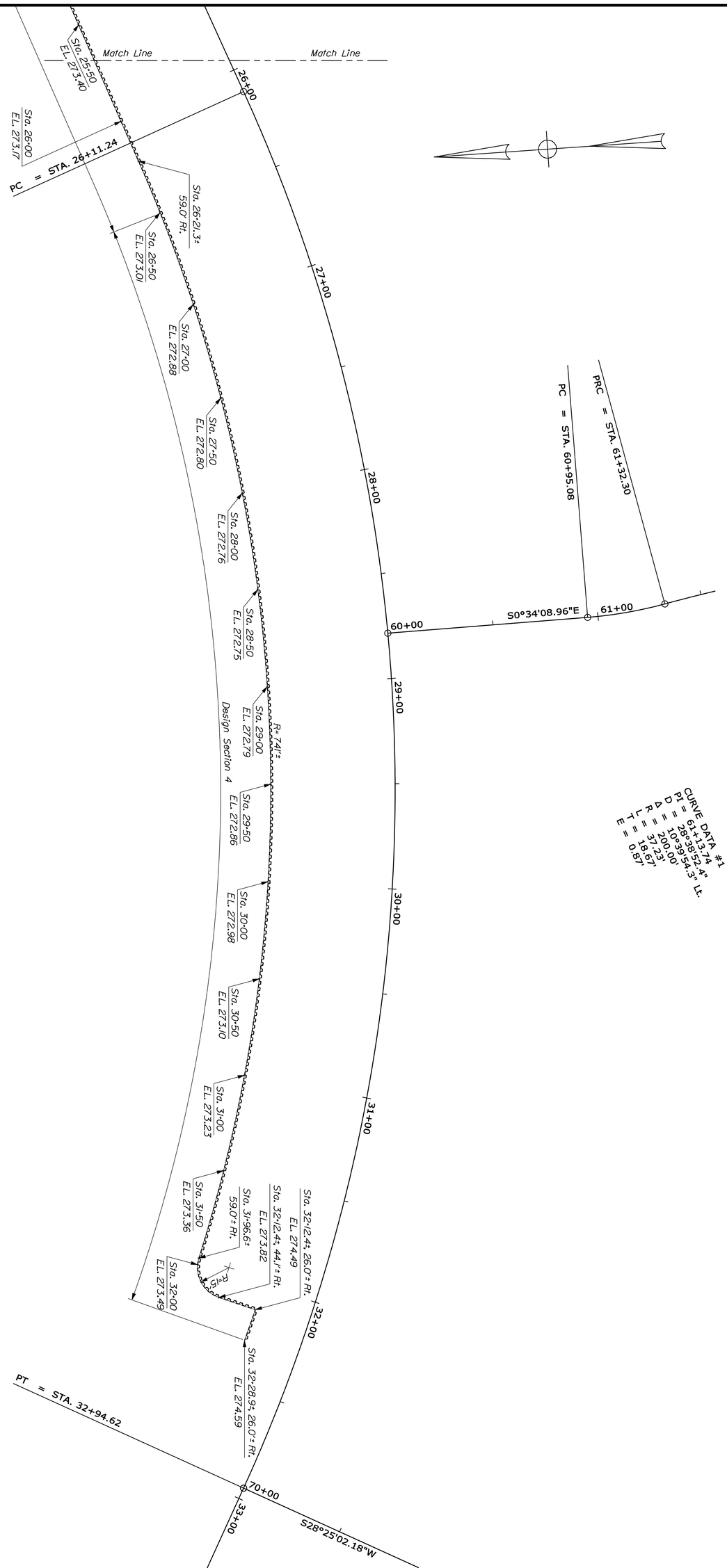

PROJ. MANAGER	J. Wentworth	BY	DATE
DESIGN-DETAILED	J. Folsom	D. Shaw	July 2010
CHECKED-REVIEWED	_____	_____	_____
DESIGN2-DETAILED2	_____	__	_____
DESIGN3-DETAILED3	_____	_____	_____
REVISIONS 1	_____		_____
REVISIONS 2	_____		_____
REVISIONS 3	_____		_____
REVISIONS 4	_____		_____
FIELD CHANGES	_____		_____

SIGNATURE

P.E. NUMBER

DATE

SHEET NUMBER 133 OF 160

NAPLES BAY BRIDGE
CHUTES RIVER
NAPLES CUMBERLAND COUNTY

SHEET PILE WALL LAYOUT

STATE OF MAINE
DEPARTMENT OF TRANSPORTATION

BH-A106(000)

PIN 11060.00

BRIDGE NO. 2047

BRIDGE PLANS

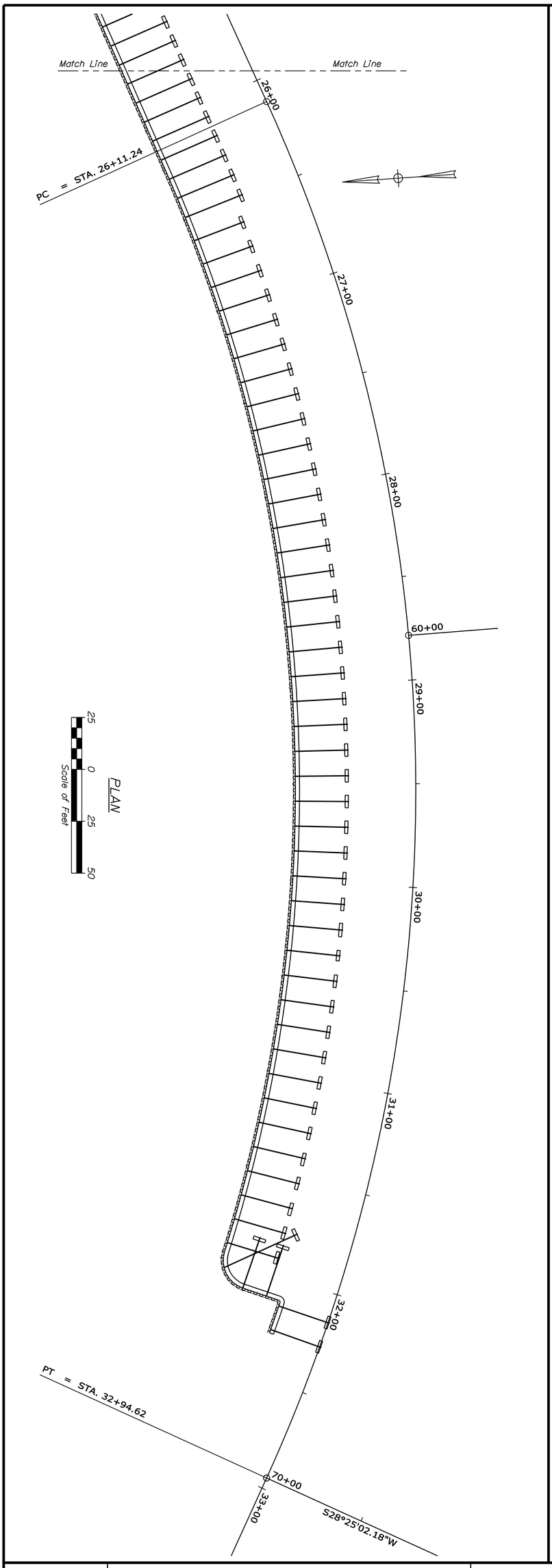

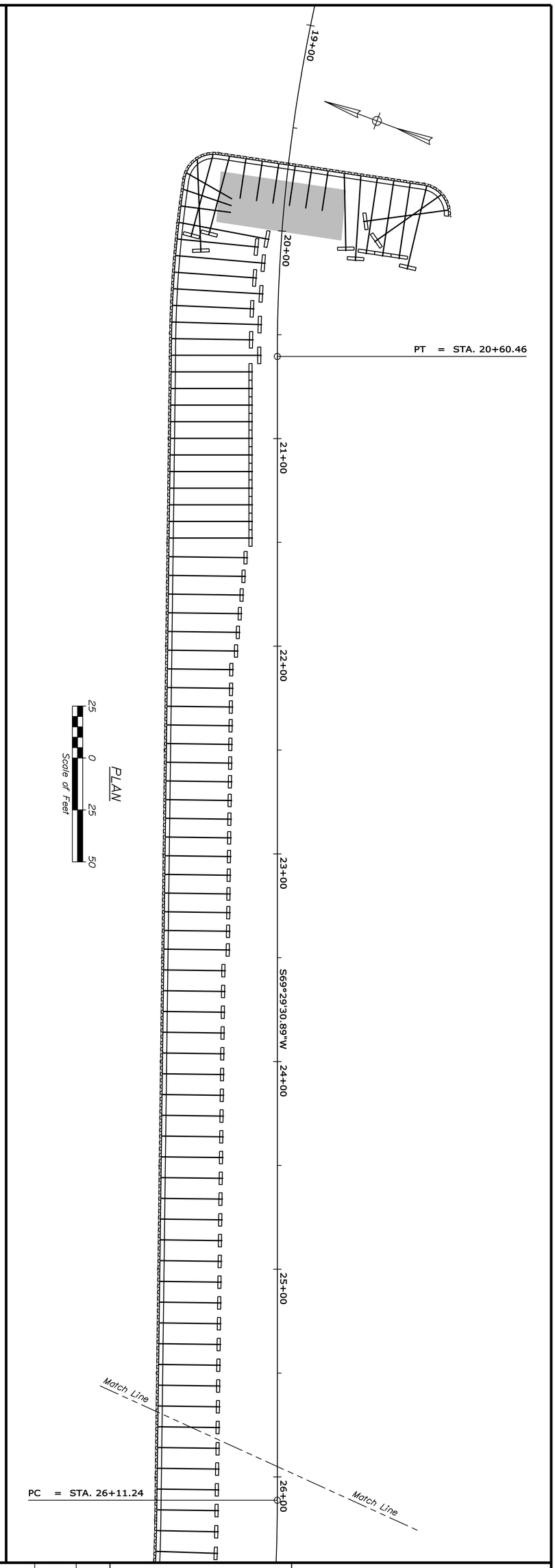

SHEET NUMBER 134 OF 160

NAPLES BAY BRIDGE
CHUTES RIVER
NAPLES CUMBERLAND COUNTY

PROPOSED DEADMAN LAYOUT

	PROJ. MANAGER	J. Wentworth	BY	DATE
	DESIGN-DETAILED	J. Folsom	D. Shaw	July 2010
	CHECKED-REVIEWED	_____	_____	_____
	DESIGN2-DETAILED2	_____	__	_____
	DESIGN3-DETAILED3	_____	_____	_____
	REVISIONS 1	_____		_____
	REVISIONS 2	_____		_____
	REVISIONS 3	_____		_____
	REVISIONS 4	_____		_____
	FIELD CHANGES	_____		_____

SIGNATURE

P.E. NUMBER

DATE

STATE OF MAINE
DEPARTMENT OF TRANSPORTATION

BH-A106(000)

BRIDGE NO. 2047 PIN 11060.00 BRIDGE PLANS

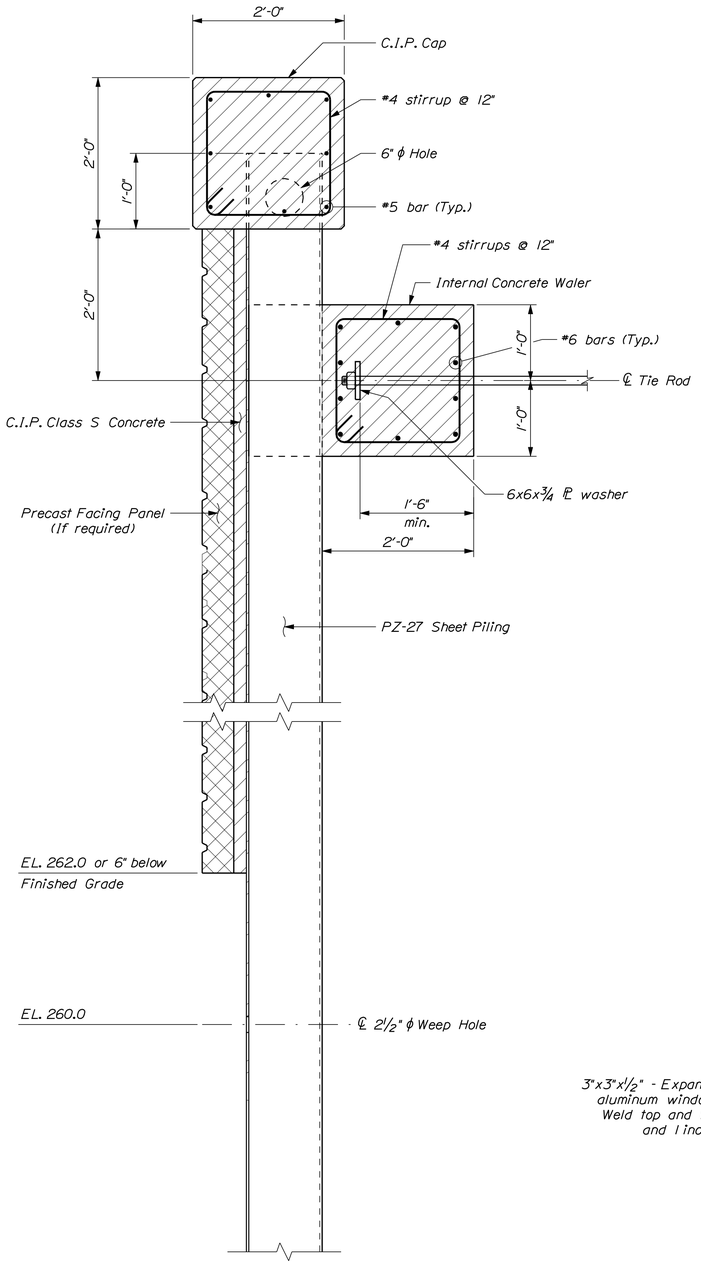

SHEET PILE WALL SECTION

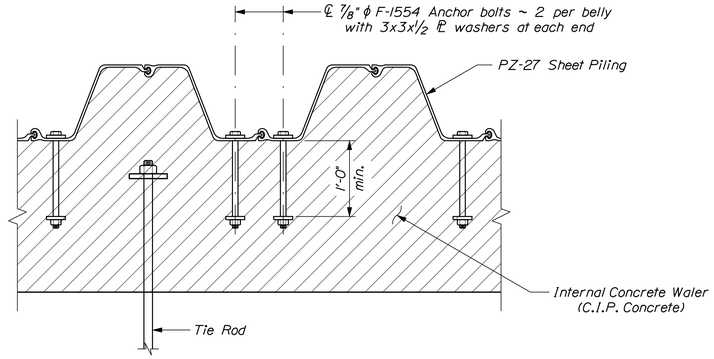

HORIZONTAL SECTION
INTERNAL CONCRETE WALER

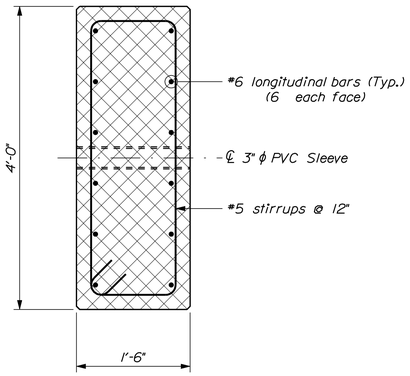

DEADMAN SECTION
Lengths vary

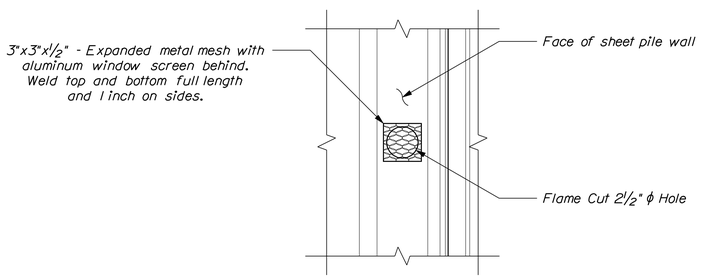

WEEP HOLE DETAIL

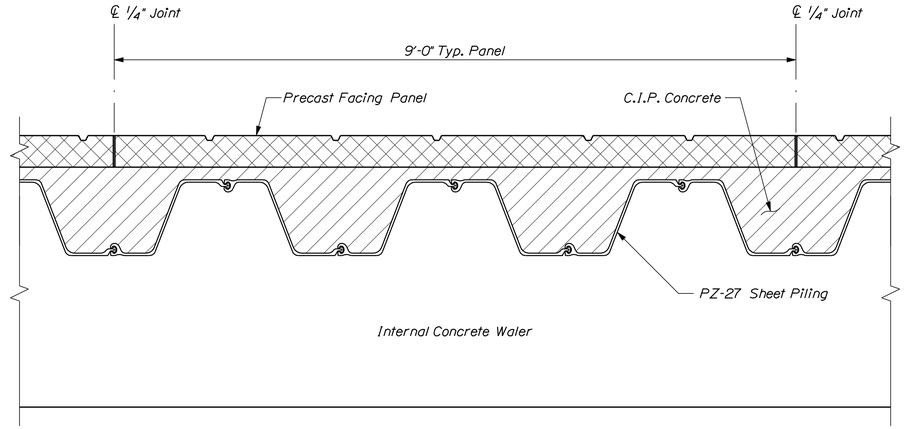

PRECAST FACING PANEL
* Note: Facing will be bid as an option and may be removed by the Department

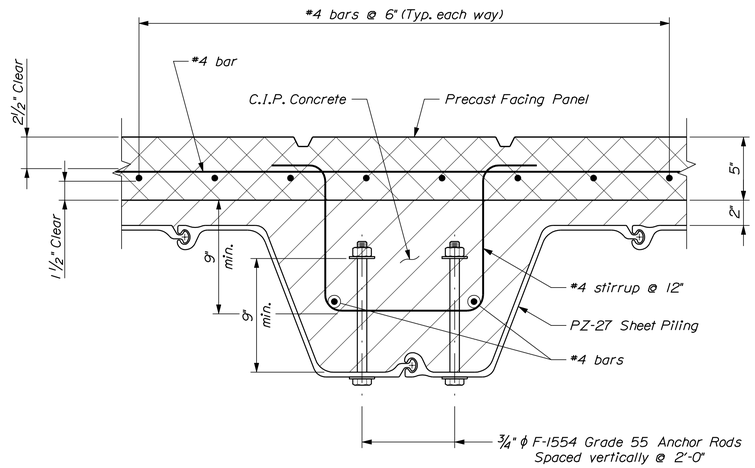

SECTION
PRECAST FACING PANEL ATTACHMENT

STATE OF MAINE
DEPARTMENT OF TRANSPORTATION

BH-A106(000)

PIN 11060.00

BRIDGE NO. 2047

BRIDGE PLANS

	BY	DATE
PROJ. MANAGER	J. Wentworth	
DESIGN-DETAILED	D. Shaw	July 2010
CHECKED-REVIEWED	J. Folsom	-----
DESIGN2-DETAILED2	-----	-----
DESIGN3-DETAILED3	-----	-----
REVISIONS 1	-----	-----
REVISIONS 2	-----	-----
REVISIONS 3	-----	-----
REVISIONS 4	-----	-----
FIELD CHANGES	-----	-----

SIGNATURE

P.E. NUMBER

DATE

NAPLES BAY BRIDGE
CHUTES RIVER
CUMBERLAND COUNTY
NAPLES

SHEET PILE WALL DETAILS

SHEET NUMBER

135

OF 160

Filename: ...\135_Sheet_Pile_Wall_Details.dgn Division: BRIDGE Username: dona.damren Date:7/20/2010

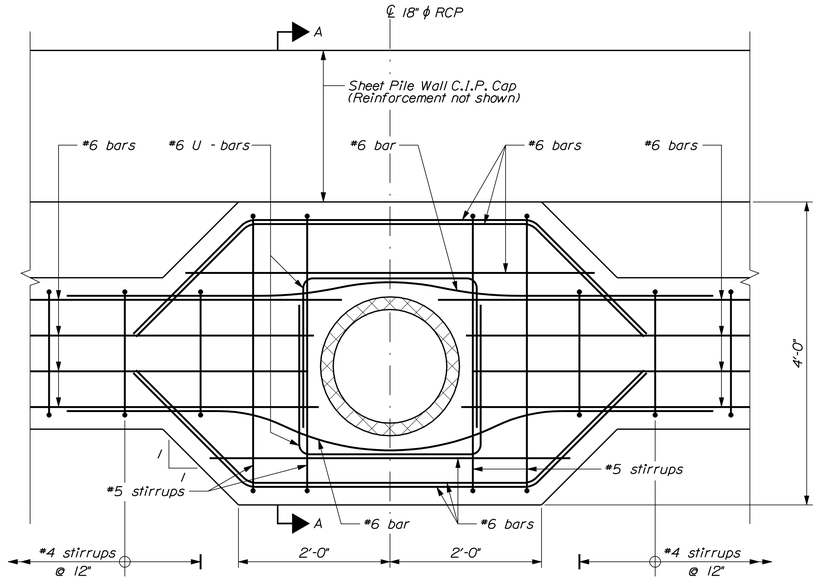

WALER REINFORCEMENT AROUND DRAINAGE OUTLET

Outlet at Station 24+50

#6 bars should have a 24" min. lap splice

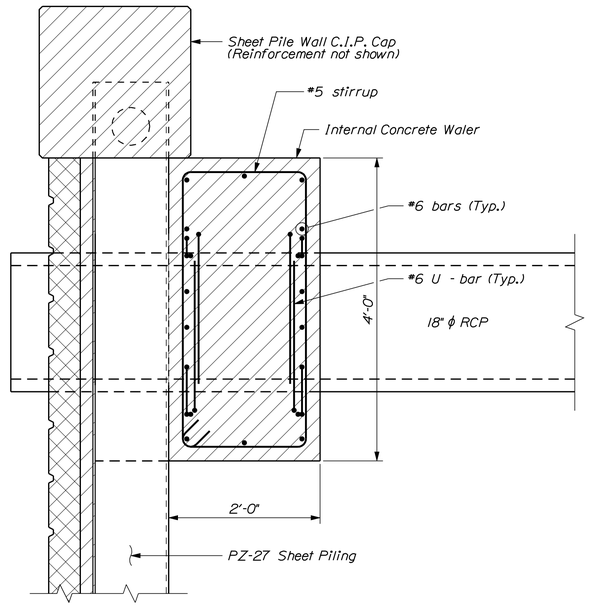

SECTION A-A

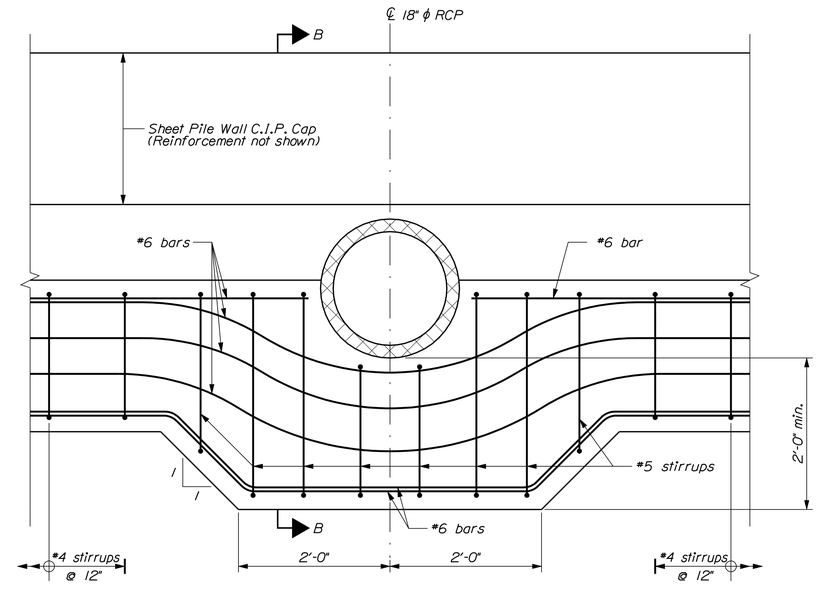

WALER REINFORCEMENT AROUND DRAINAGE OUTLET

Outlet at Station 29+50 Shown

Waler reinforcement around outlets at Stations 27+00, 28+00 and 31+11 similar

#6 bars should have a 24" min. lap splice

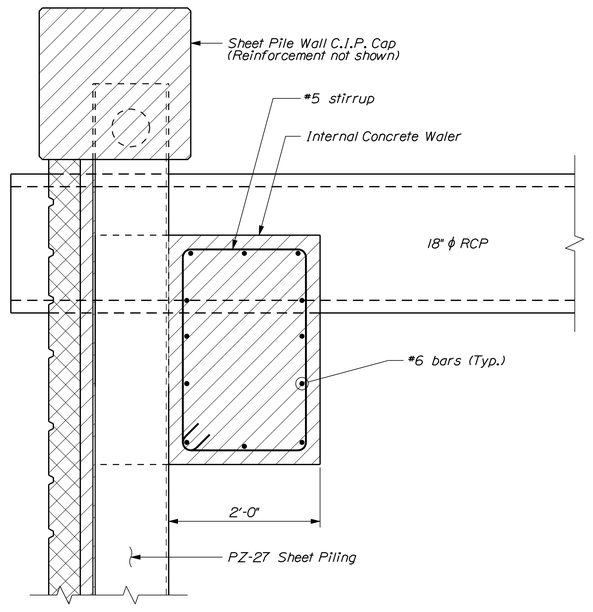

SECTION B-B

STATE OF MAINE
DEPARTMENT OF TRANSPORTATION

BH-A106(000)

PIN 11060.00

BRIDGE NO. 2047

BRIDGE PLANS

		DATE
PROJ. MANAGER	J. Wentworth	
DESIGN-DETAILED	J. Folsom	July 2010
CHECKED-REVIEWED	-----	-----
DESIGN2-DETAILED2	-----	-----
DESIGN3-DETAILED3	-----	-----
REVISIONS 1	-----	-----
REVISIONS 2	-----	-----
REVISIONS 3	-----	-----
REVISIONS 4	-----	-----
FIELD CHANGES	-----	-----

SIGNATURE

P.E. NUMBER

DATE

NAPLES BAY BRIDGE
CHUTES RIVER
NAPLES CUMBERLAND COUNTY

SHEET PILE WALL DETAILS

SHEET NUMBER

136

OF 160

Filename: ...\136_Sheet_Pile_Wall_Details.dgn Division: BRIDGE Username: dana.damren Date:7/20/2010

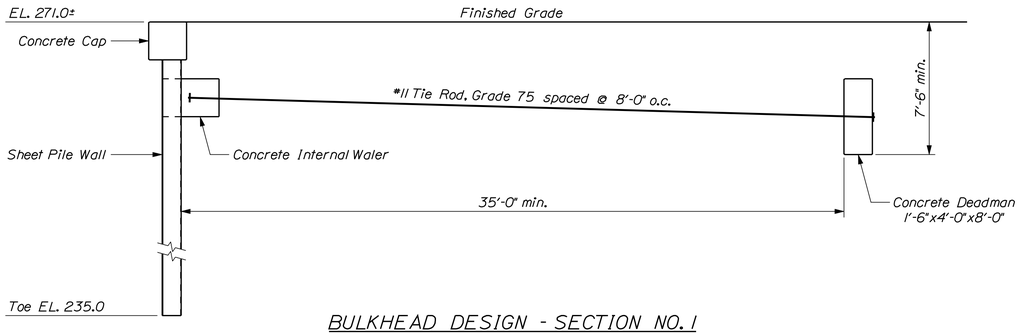

BULKHEAD DESIGN - SECTION NO. 1

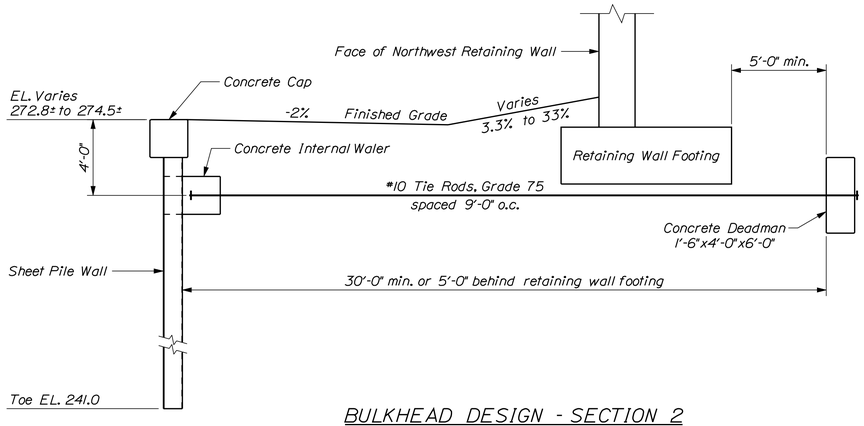

BULKHEAD DESIGN - SECTION 2

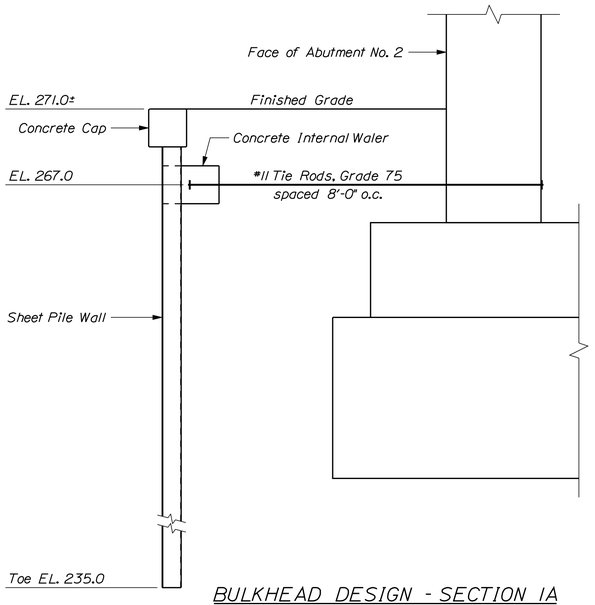

BULKHEAD DESIGN - SECTION IA

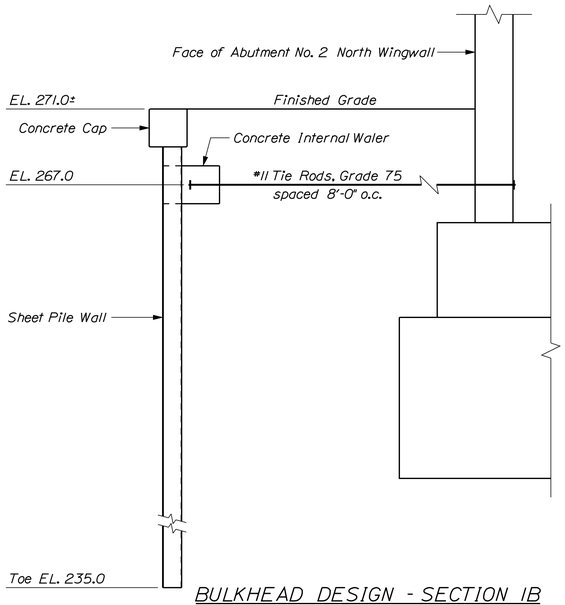

BULKHEAD DESIGN - SECTION IB

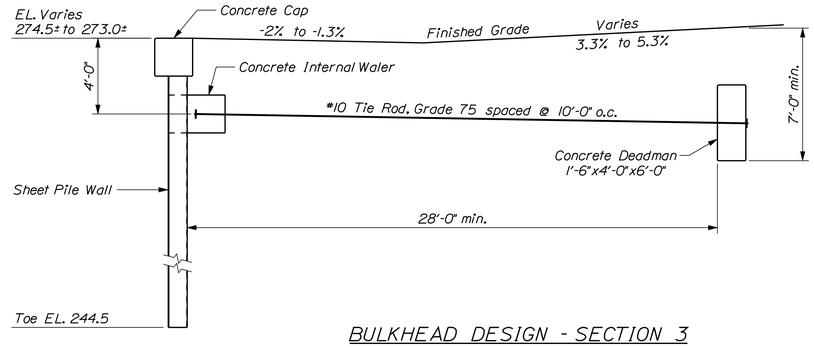

BULKHEAD DESIGN - SECTION 3

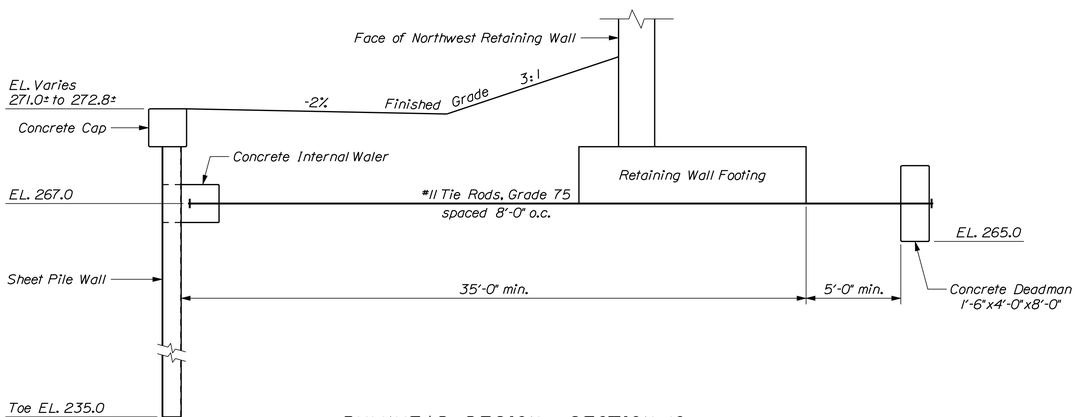

BULKHEAD DESIGN - SECTION IC

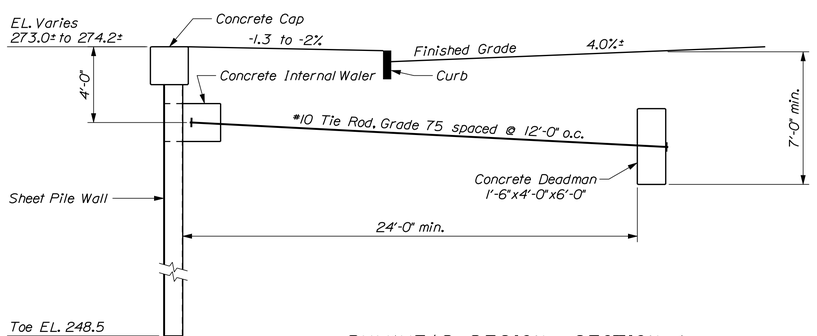

BULKHEAD DESIGN - SECTION 4

STATE OF MAINE
DEPARTMENT OF TRANSPORTATION

BH-A106(000)

PIN 11060.00

BRIDGE NO. 2047

BRIDGE PLANS

PROJ. MANAGER	J. Wentworth		
DESIGN-DETAILED	J. Folsom	BY	D. Shaw
CHECKED-REVIEWED	-----	-----	-----
DESIGN2-DETAILED2	-----	-----	-----
DESIGN3-DETAILED3	-----	-----	-----
REVISIONS 1	-----	-----	-----
REVISIONS 2	-----	-----	-----
REVISIONS 3	-----	-----	-----
REVISIONS 4	-----	-----	-----
FIELD CHANGES	-----	-----	-----

	DATE
	July 2010
SIGNATURE	-----

P.E. NUMBER	-----

DATE	-----

NAPLES BAY BRIDGE
CHUTES RIVER
NAPLES CUMBERLAND COUNTY

SHEET PILE WALL SECTIONS

SHEET NUMBER

137

OF 160

Filename: ...\137_Wall_Design_Sections.dgn Division: BRIDGE Username: dana.damren Date:7/21/2010

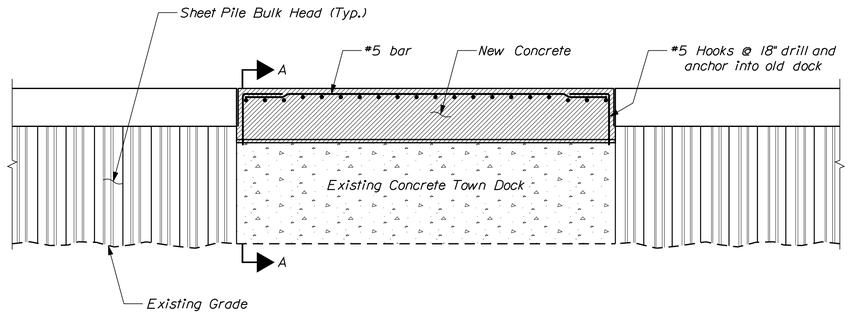

SECTION ALONG FACE OF BULKHEAD

Reinforcing in concrete cap not shown

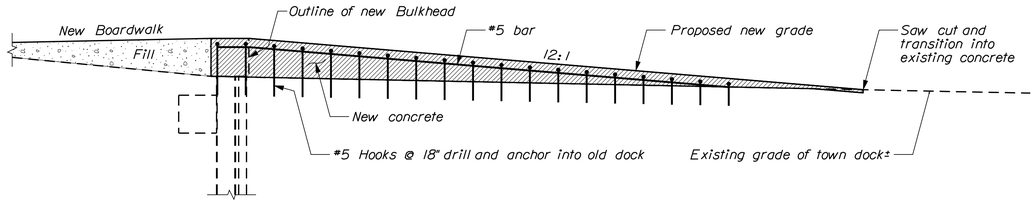

SECTION A-A

Filename: ...\MSTA\138_Town_Dock_Details.dgn Division: BRIDGE Username: dana.damren Date:7/20/2010

STATE OF MAINE
DEPARTMENT OF TRANSPORTATION

BH-A106(000)

PIN 11060.00

BRIDGE NO. 2047

BRIDGE PLANS

PROJ. MANAGER	J. Wentworth	BY	DATE
DESIGN-DETAILED	J. Folsom	D. Shaw	July 2010
CHECKED-REVIEWED	-----	-----	-----
DESIGN2-DETAILED2	-----	--	-----
DESIGN3-DETAILED3	-----	-----	-----
REVISIONS 1	-----	-----	-----
REVISIONS 2	-----	-----	-----
REVISIONS 3	-----	-----	-----
REVISIONS 4	-----	-----	-----
FIELD CHANGES	-----	-----	-----

SIGNATURE

P.E. NUMBER

DATE

NAPLES BAY BRIDGE
CHUTES RIVER
NAPLES CUMBERLAND COUNTY

TOWN DOCK DETAILS

SHEET NUMBER

138

OF 160

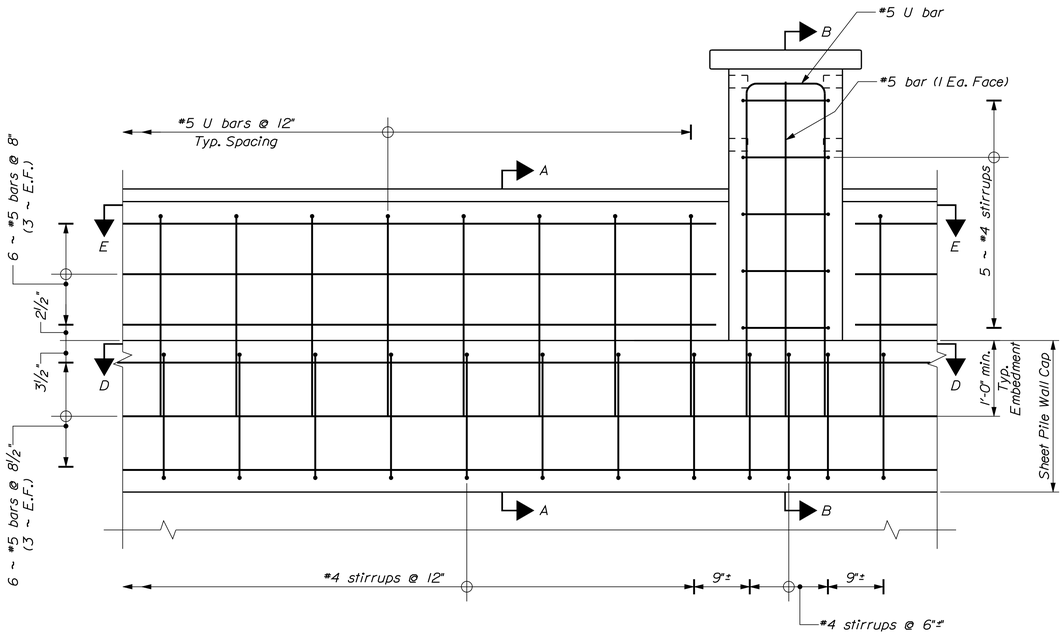

ELEVATION - REINFORCEMENT LAYOUT
2 Pipe Rail not shown

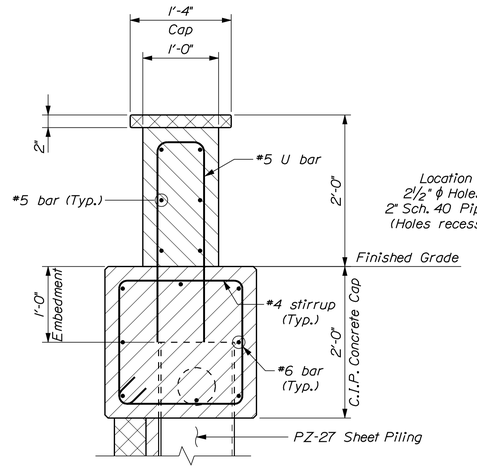

SECTION A-A
2 Pipe Rail not shown

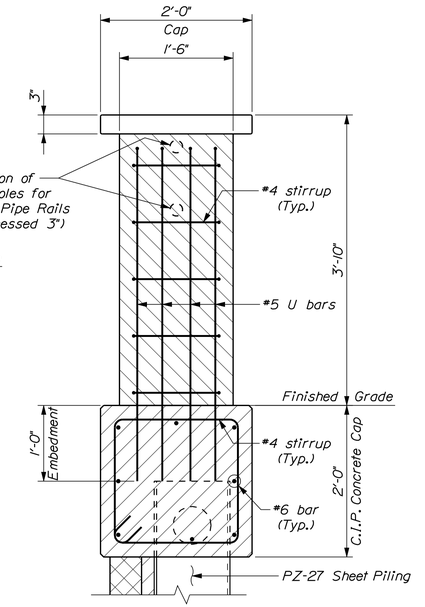

SECTION B-B
2 Pipe Rail not shown

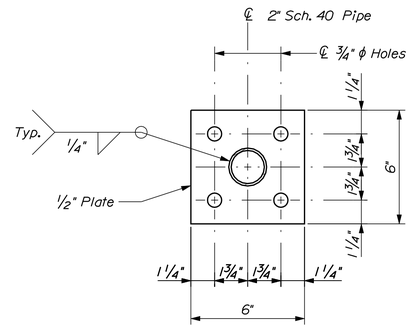

SECTION C-C
Post base

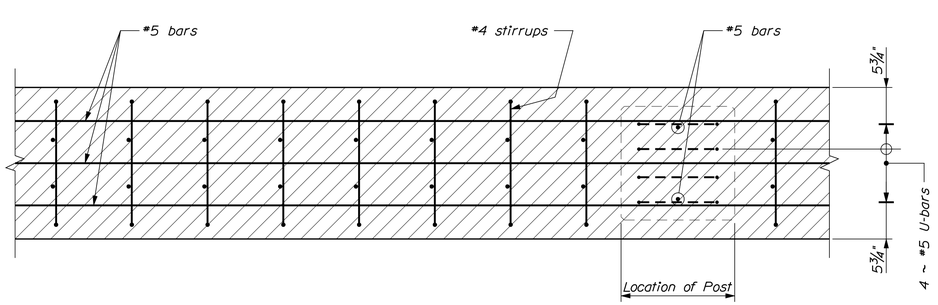

SECTION D-D

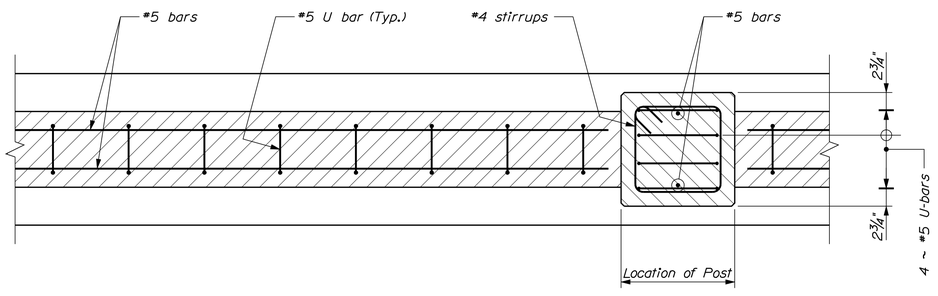

SECTION E-E

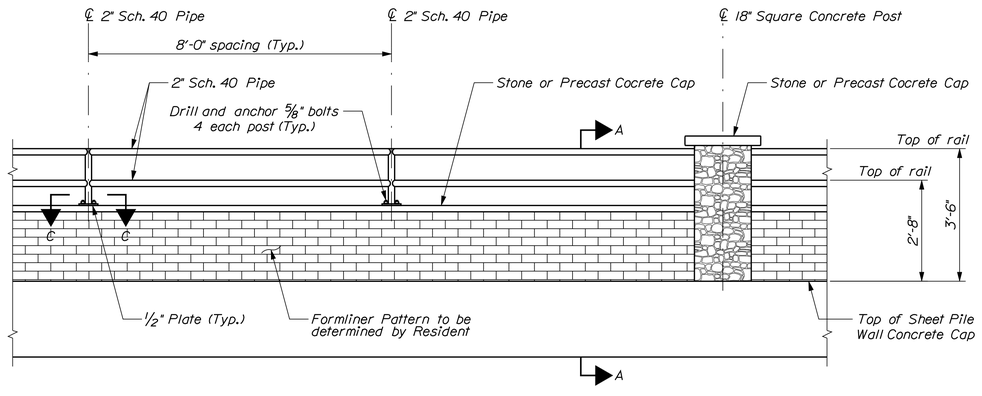

ELEVATION - CONCRETE WALL WITH 2 PIPE RAIL
Attached to Sheet Pile Wall Cap

STATE OF MAINE
DEPARTMENT OF TRANSPORTATION

BH-A106(000)

PIN 11060.00

BRIDGE NO. 2047

BRIDGE PLANS

PROJ. MANAGER	J. Wentworth	DATE	
DESIGN-DETAILED	J. Folsom	BY	D. Show
CHECKED-REVIEWED	-----	July 2010	
DESIGN2-DETAILED2	-----	-----	
DESIGN3-DETAILED3	-----	SIGNATURE	
REVISIONS 1	-----	-----	
REVISIONS 2	-----	P.E. NUMBER	
REVISIONS 3	-----	-----	
REVISIONS 4	-----	DATE	
FIELD CHANGES	-----	-----	

NAPLES BAY BRIDGE
CHUTES RIVER
NAPLES CUMBERLAND COUNTY

2 PIPE RAIL ON CONCRETE CAP

SHEET NUMBER
139
OF 160

Filename: ...\139_Ret_Wall_2-PipeRail.dgn Division: BRIDGE Username: dana.damren Date:7/22/2010

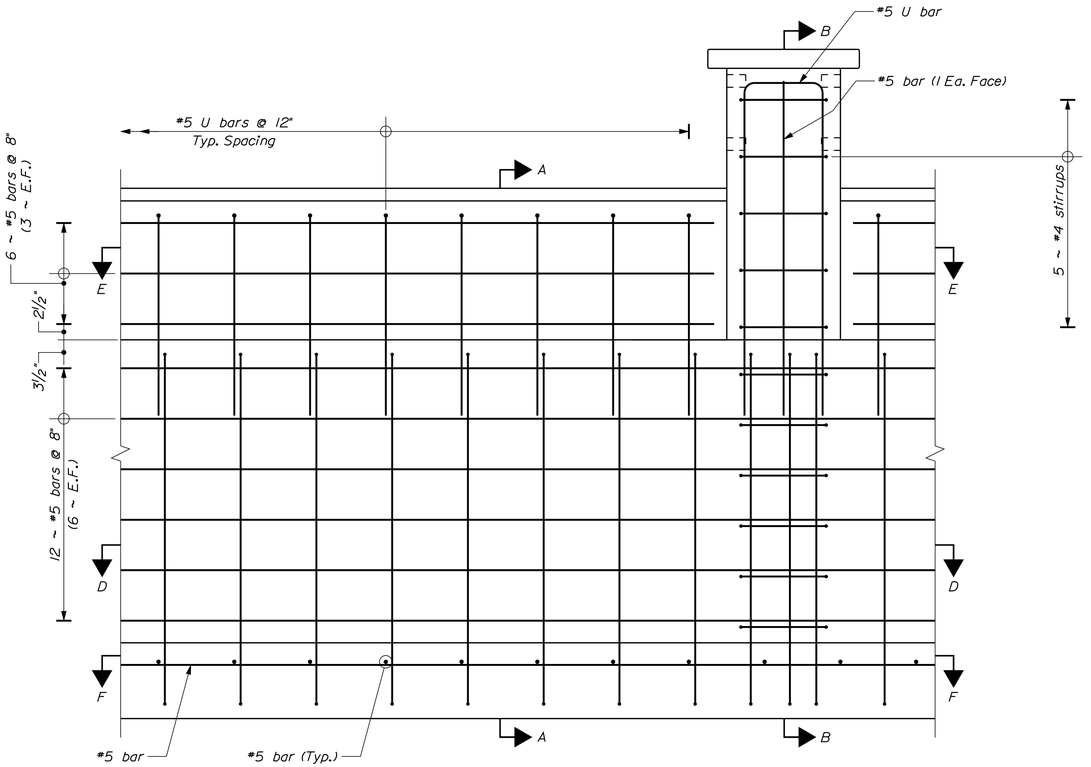

ELEVATION - REINFORCEMENT LAYOUT
2 Pipe Rail not shown

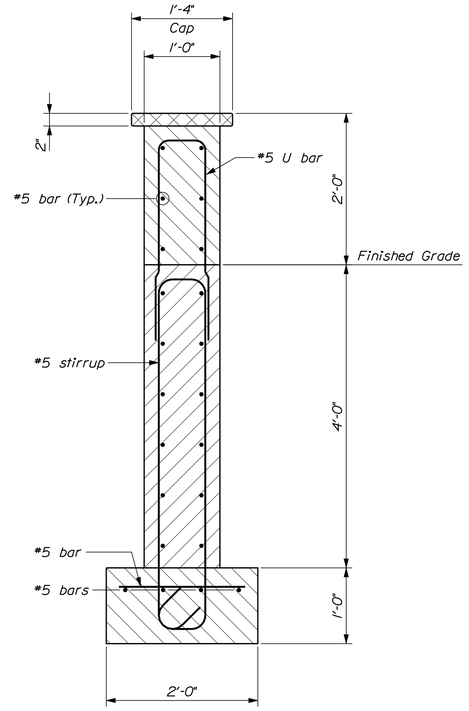

SECTION A-A
2 Pipe Rail not shown

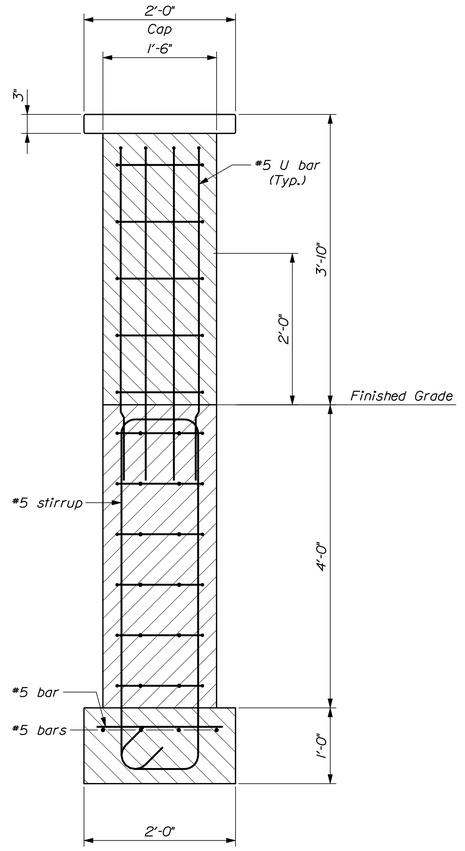

SECTION A-A
2 Pipe Rail not shown

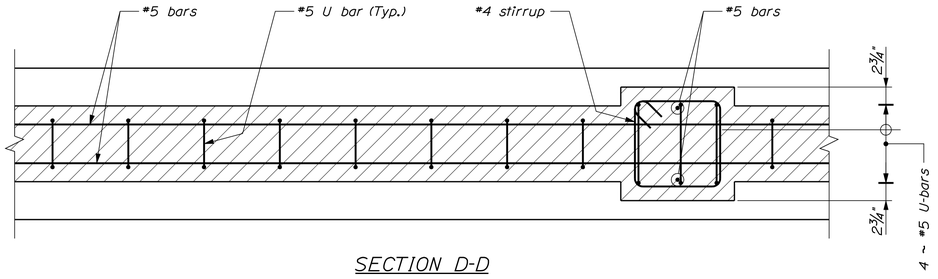

SECTION D-D

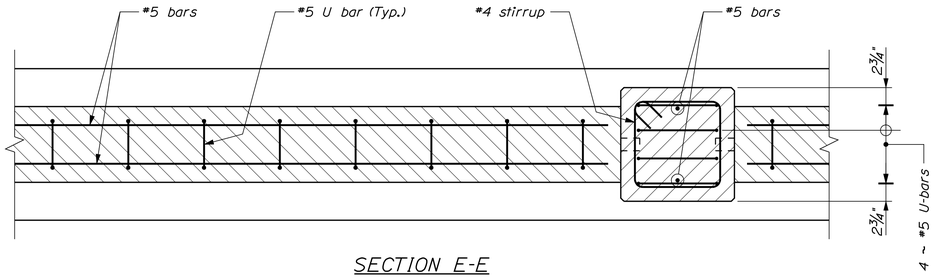

SECTION E-E

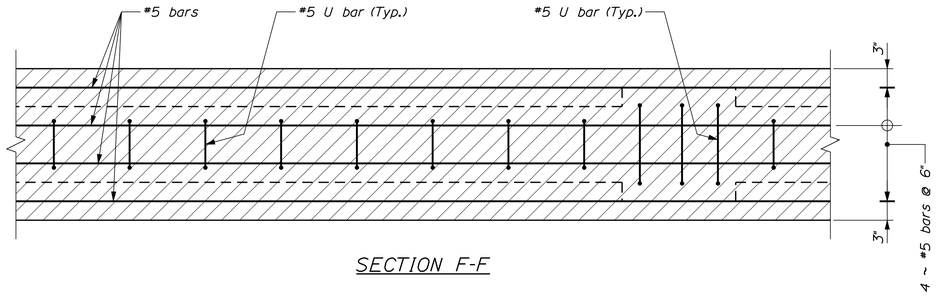

SECTION F-F

STATE OF MAINE
DEPARTMENT OF TRANSPORTATION

BH-A106(000)

PIN 11060.00

BRIDGE NO. 2047

BRIDGE PLANS

PROJ. MANAGER	J. Wentworth	BY	DATE
DESIGN-DETAILED	J. Folsom	D. Shaw	July 2010
CHECKED-REVIEWED	------	------	------
DESIGN2-DETAILED2	------	--	------
DESIGN3-DETAILED3	------	----------	------
REVISIONS 1	------	------	------
REVISIONS 2	------	------	------
REVISIONS 3	------	------	------
REVISIONS 4	------	------	------
FIELD CHANGES	------	------	------

SIGNATURE

P.E. NUMBER

DATE

NAPLES BAY BRIDGE
CHUTES RIVER
NAPLES CUMBERLAND COUNTY

2 PIPE RAIL WITH FOUNDATION

SHEET NUMBER

140

OF 160

Filename: ...\140_Ret_Wall_2-PipeRail_w-fnd.dgn Division: BRIDGE Username: dana.damren Date:7/20/2010

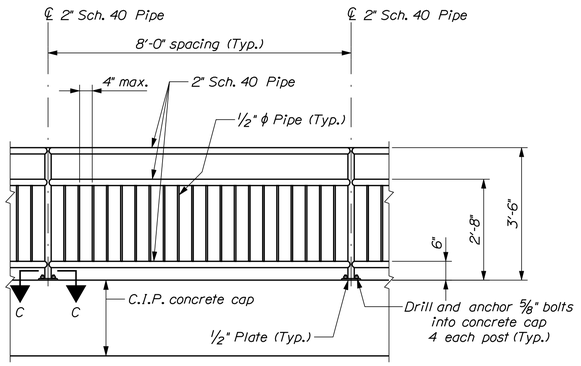

ELEVATION - 3 PIPE RAIL
Attached to Sheet Pile Wall Cap

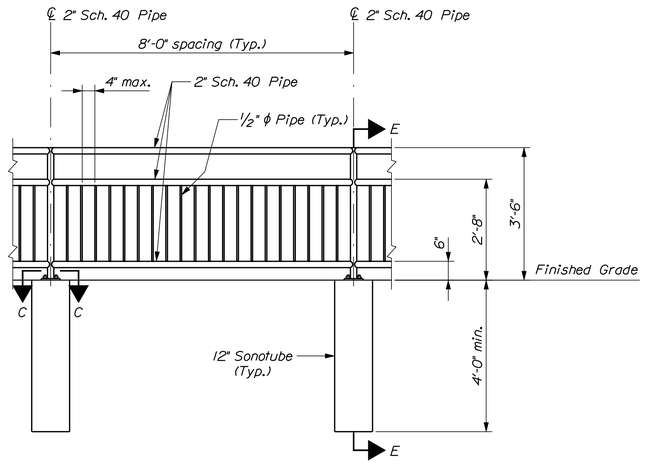

ELEVATION - 3 PIPE RAIL
With independent foundation

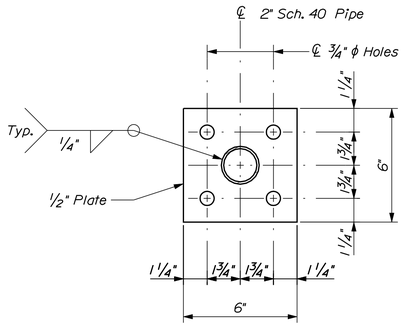

SECTION C-C
Post base

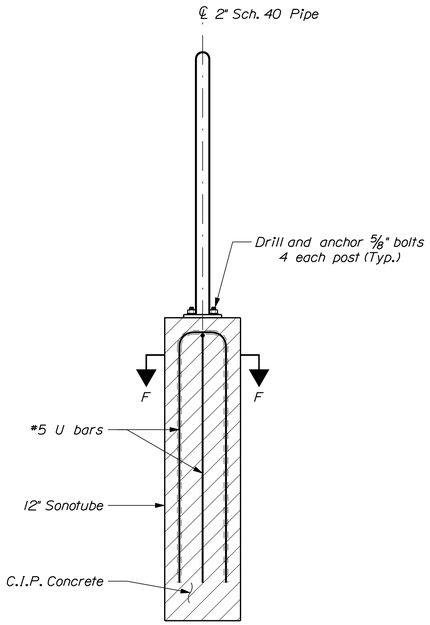

SECTION E-E

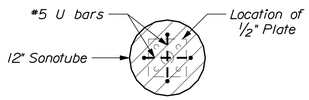

SECTION F-F

STATE OF MAINE
DEPARTMENT OF TRANSPORTATION

BH-A106(000)

PIN 11060.00

BRIDGE NO. 2047

BRIDGE PLANS

PROJ. MANAGER	J. Wentworth	BY	DATE
DESIGN-DETAILED	J. Folsom	D. Shaw	July 2010
CHECKED-REVIEWED	------	------	SIGNATURE
DESIGN2-DETAILED2	------	------	------
DESIGN3-DETAILED3	------	------	P.E. NUMBER
REVISIONS 1	------	------	------
REVISIONS 2	------	------	------
REVISIONS 3	------	------	DATE
REVISIONS 4	------	------	------
FIELD CHANGES	------	------	------

NAPLES BAY BRIDGE
CHUTES RIVER
NAPLES CUMBERLAND COUNTY

3 PIPE RAIL DETAILS

SHEET NUMBER
141
OF 160

Filename: ...\141_Ret_Wall_3-PipeRail.dgn Division: BRIDGE Username: dana.damren Date:7/20/2010

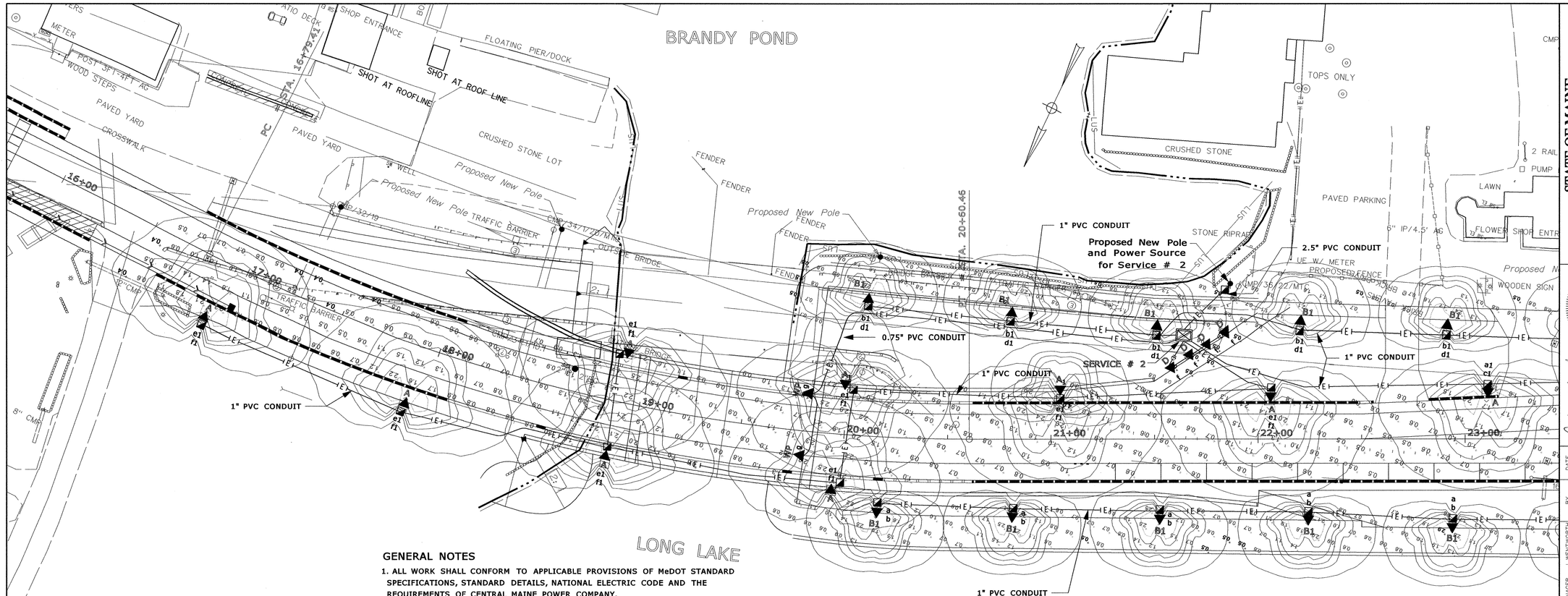

GENERAL NOTES

1. ALL WORK SHALL CONFORM TO APPLICABLE PROVISIONS OF MeDOT STANDARD SPECIFICATIONS, STANDARD DETAILS, NATIONAL ELECTRIC CODE AND THE REQUIREMENTS OF CENTRAL MAINE POWER COMPANY.
2. ALL POLES SHALL HAVE A 20A/GFI, 120V RECEPTACLE.
3. ALL LIGHTING AND RECEPTACLE CIRCUITS SHALL BE #10 XHHW SOLID COPPER WIRE. ALL POLES SHALL BE GROUNDED USING INTERNAL LUGS. THE GROUNDING CONDUCTOR SHALL BE #10 SOLID COPPER.
4. ALL CONDUIT SHALL BE SCHEDULE 80 PVC.
5. ALL BURIED CONDUIT SHALL BE ENCASED IN CONCRETE. CONCRETE ENCASEMENT WILL BE INCIDENTAL TO PAYMENT UNDER ITEM 626.221.
6. ALL CONDUIT ON CMP POLES SHALL MEET CMP STANDARDS.
7. ALL POLES AT THE ANGLE PARKING AND BEHIND THE CURB LINE SHALL BE 18" (CLEAR) BEHIND THE CURB.
8. INSTALL A JUNCTION BOX BESIDE EACH POLE, SO THAT THERE WILL BE NO SPLICES AT THE POLES.
9. POLES "A", "A_1", "A_1+", AND "A+" SHALL BE MOUNTED ON 24" DIAMETER FOUNDATIONS.
10. POLES "B1" SHALL BE MOUNTED ON 18" DIAMETER FOUNDATIONS.
11. PAYMENT FOR HID WALLPACKS FURNISHED AND INSTALLED FOR UNDER-BRIDGE LIGHTING SHALL BE INCIDENTAL TO PAYMENT UNDER ITEM 634.16.
12. ORNAMENTAL LIGHT STANDARDS AND L.E.D. FIXTURES "A", "A+","A_1", "A_1+" AND "B1" WILL BE FURNISHED BY THE TOWN OF NAPLES FOR INSTALLATION BY THE CONTRACTOR.
13. LIGHTED BOLLARDS "D" WILL BE FURNISHED BY THE TOWN OF NAPLES FOR INSTALLATION BY THE CONTRACTOR.
14. FIXTURES ON DUAL FIXTURE POLES "A_1" AND "A_1+" SHALL HAVE SEPARATE POWER FEEDS.
15. PROPOSED NEW UTILITY POLES WILL BE INSTALLED BY OTHERS AND ARE NOT INCLUDED IN THIS CONTRACT.
16. PAYMENT UNDER ITEM 634.16 WILL INCLUDE ALL MATERIALS, LABOR, AND EQUIPMENT NECESSARY TO PROVIDE A FULLY FUNCTIONING HIGHWAY AND PEDESTRIAN LIGHTING SYSTEM, EXCEPT THOSE ITEMS TO BE PAID UNDER OTHER RELATED BID ITEMS OF THE CONTRACT.

LIGHTING FIXTURES AND POLES

THE LIGHT FIXTURES SHALL BE LIGHT EMITTING DIODE (LED) FIXTURES AS LISTED IN THE LUMINAIRE SCHEDULE ON THIS SHEET. THE FIXTURES AND POLES SHALL BE THOSE MANUFACTURED BY CYCLONE LIGHTING. CATALOG NUMBERS OF THE POLES ARE LISTED BELOW.

▼ CYCLONE LIGHT FIXTURE AND POLE

A = CY55P1B/M204/PS50/BD57, 25 FT POLE
A+ = CY55P1B/M204/PS50/BD57, 30 FT POLE
B1 = CE21T4/PA40/BD55, 14.75 FT POLE
D = CBM1158, 42.25 IN HT. BOLLARD
WP = HID WALLPACK UNDER BRIDGE, 70W MH
A_1 = CY55P1B/M204/PS50/BD57, 25 FT POLE WITH CE21T4/M105 MOUNTED ON WALKWAY SIDE
A_1+ = CY55P1B/M204/PS50/BD57, 30 FT POLE WITH C321T4/M105 MOUNTED ON WALKWAYSIDE

LUMINAIRE SCHEDULE

Symbol	Label	Qty	Catalog Number	Description	Lamp	File	Lumens	LLF	Watts
▲ A	A	26	LED 90 Watt	STORM	(27 LED) 90W LED Clear	3L3HS-FT1GC-90W350DC-7200L5000K.ies	7200	0.81	90
▲ B1	B	28	LED 40 Watt	STORM	(12 LED) 40W LED Clear	3L3HS-FT1GC-40W350DC-3200L5000K.ies	3200	0.81	40

STATISTICS

Description	Symbol	Avg	Max	Min	Max/Min	Avg/Min
At Rte 114 + / Pkg	+	1.0 fc	3.4 fc	0.4 fc	8.5:1	2.5:1
North Walkway	+	1.2 fc	2.9 fc	0.5 fc	5.8:1	2.4:1
Roadway 16+50 to 25+50	+	1.0 fc	4.0 fc	0.4 fc	10.0:1	2.5:1
South Walkway	+	1.1 fc	3.2 fc	0.5 fc	6.4:1	2.2:1

SERVICES -

EACH SERVICE SHALL BE :
100 AMP METER / LOAD CENTER
PEDESTAL TYPE
100 AMP, 2 POLE CIRCUIT BREAKERS,
20 CIRCUIT LOAD CENTER
3RC (RAIN TIGHT)
U.L. LISTED FOR THIS PURPOSE

SERVICE # 1
Circuit a: 208V / 20A
Circuit b: 120V / 20A
Circuit c: 120V / 20A
Circuit d: 208V / 20A

SERVICE # 2
Circuit a1: 208V / 20A
Circuit b1: 120V / 20A
Circuit c1: 120V / 20A
Circuit d1: 208V / 20A
Circuit e1: 208V / 20A
Circuit f1: 120V / 20A
Circuit f: 120V / 20A
Circuit g: 120V / 20A

LEGEND

SERVICE / LOAD CENTER
CONDUIT
LIGHT FIXTURE, POLE AND FOUNDATION
JUNCTION BOX

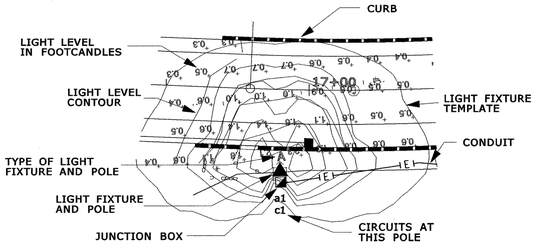

KEY TO PLAN

STATE OF MAINE
DEPARTMENT OF TRANSPORTATION

BH-A106(000)

PIN 11060.00

HIGHWAY PLANS

STATE OF MAINE · ALBERT L. GOUDREAU No. 4226 · LICENSED PROFESSIONAL ENGINEER

SIGNATURE 4226 P.E. NUMBER

July 19, 2010 DATE

PROJ. MANAGER	J. WENTWORTH	
DESIGN-DETAILED	RAL	5/10
CHECKED-REVIEWED	RAL	5/10
DESIGN2-DETAILED2		
DESIGN3-DETAILED3		
REVISIONS 1	NOTE REVISIONS	7/2/10
REVISIONS 2	ADDED CE21T4 FIXTURES	7/19/10
REVISIONS 3		
REVISIONS 4		
FIELD CHANGES		

NAPLES
U.S. Rte 302

LIGHTING PLANS

SHEET NUMBER
142
OF 160

Filename: ...\HIGHWAY\MSTA\PlanSht1.dgn Division: HIGHWAY Username: jeason Date:7/19/2010

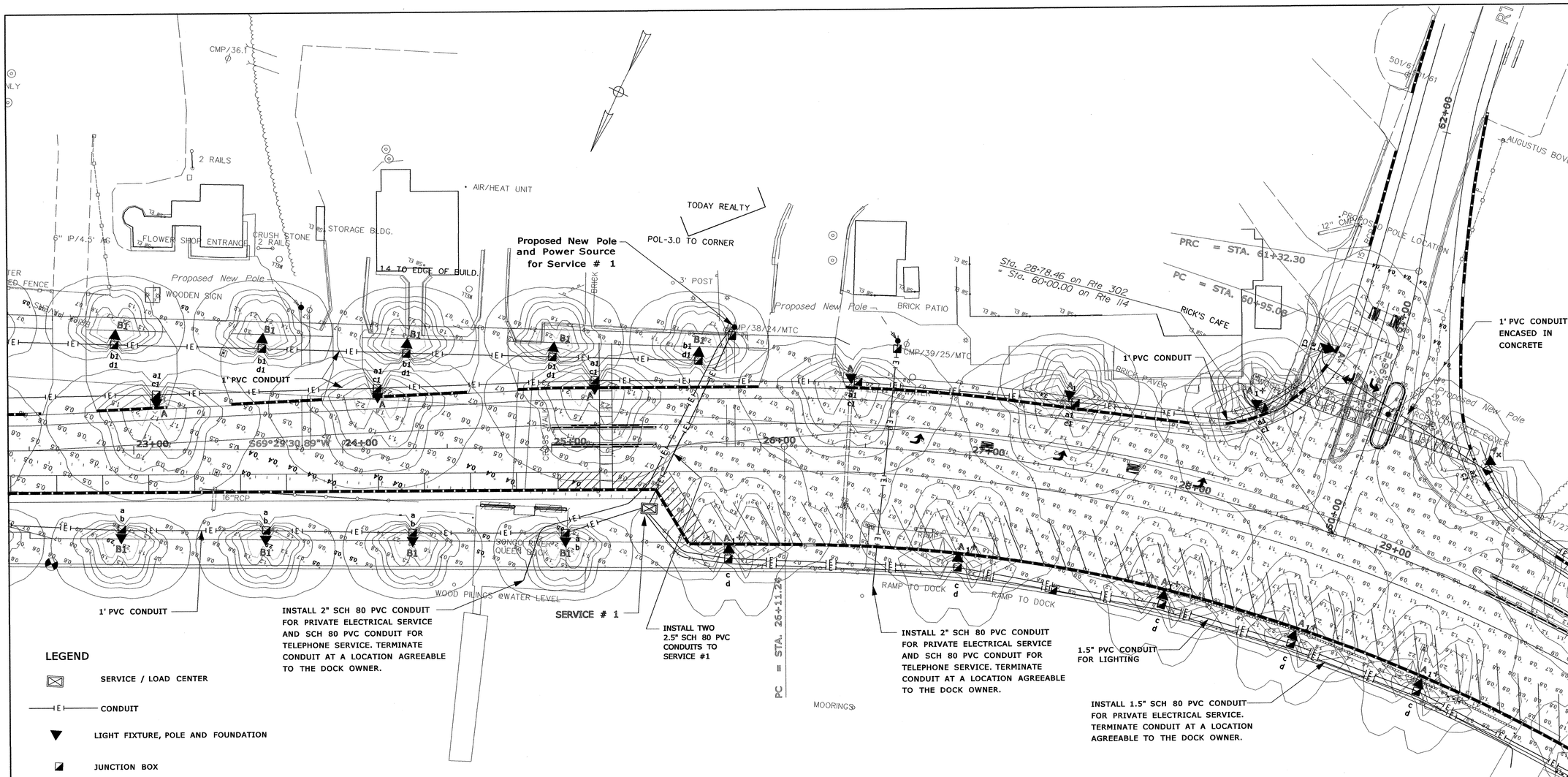

LEGEND

- SERVICE / LOAD CENTER
- CONDUIT
- LIGHT FIXTURE, POLE AND FOUNDATION
- JUNCTION BOX

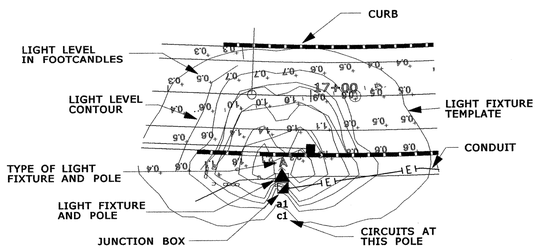

KEY TO PLAN

SERVICES -

EACH SERVICE SHALL BE :
100 AMP METER / LOAD CENTER
PEDESTAL TYPE
100 AMP, 2 POLE CIRCUIT BREAKERS,
20 CIRCUIT LOAD CENTER
3RC (RAIN TIGHT)
U.L. LISTED FOR THIS PURPOSE

SERVICE # 1

Circuit a: 208V / 20A
Circuit b: 120V / 20A
Circuit c: 120V / 20A
Circuit d: 208V / 20A

SERVICE # 2

Circuit a1: 208V / 20A
Circuit b1: 120V / 20A
Circuit c1: 120V / 20A
Circuit d1: 208V / 20A
Circuit f: 120V / 20A
Circuit g: 120V / 20A

LIGHTING FIXTURES AND POLES

CYCLONE LIGHT FIXTURE AND POLE

A = CY55P1B/M204/PS50/BD57, 25 FT POLE
A+ = CY55P1B/M204/PS50/BD57, 30 FT POLE
B1 = CE21T4/PA40/BD55, 14.75 FT POLE
D = CBM1158, 42.25 IN HT. BOLLARD
WP = HID WALLPACK UNDER BRIDGE, 70W MH
A_1 = CY55P1B/M204/PS50/BD57, 25 FT POLE WITH CE21T4/M105 MOUNTED ON WALKWAY SIDE
A_1+ = CY55P1B/M204/PS50/BD57, 30 FT POLE WITH C321T4/M105 MOUNTED ON WALKWAYSIDE

STATE OF MAINE
DEPARTMENT OF TRANSPORTATION

BH-A106(000)

PIN 11060.00

HIGHWAY PLANS

STATE OF MAINE ALBERT L. GODFREY No. 4226 LICENSED PROFESSIONAL ENGINEER

SIGNATURE 4226
P.E. NUMBER
JULY 19, 2010
DATE

	BY	DATE
PROJ. MANAGER	J. WENTWORTH	
DESIGN-DETAILED	RAL	5/10
CHECKED-REVIEWED	ALG	5/10
DESIGN2-DETAILED2		
DESIGN3-DETAILED3		
REVISIONS 1	REV. PRIVATE SERVICES	7/2/10
REVISIONS 2	ADDED CE21T4 FIXTURES	7/19/10
REVISIONS 3		
REVISIONS 4		
FIELD CHANGES		

NAPLES
U.S. Rte 302

LIGHTING PLANS

SHEET NUMBER
143
OF 160

Filename: ...\HIGHWAY\MSTA\PlanSht2.dgn Division: HIGHWAY Username: jeason Date:7/19/2010

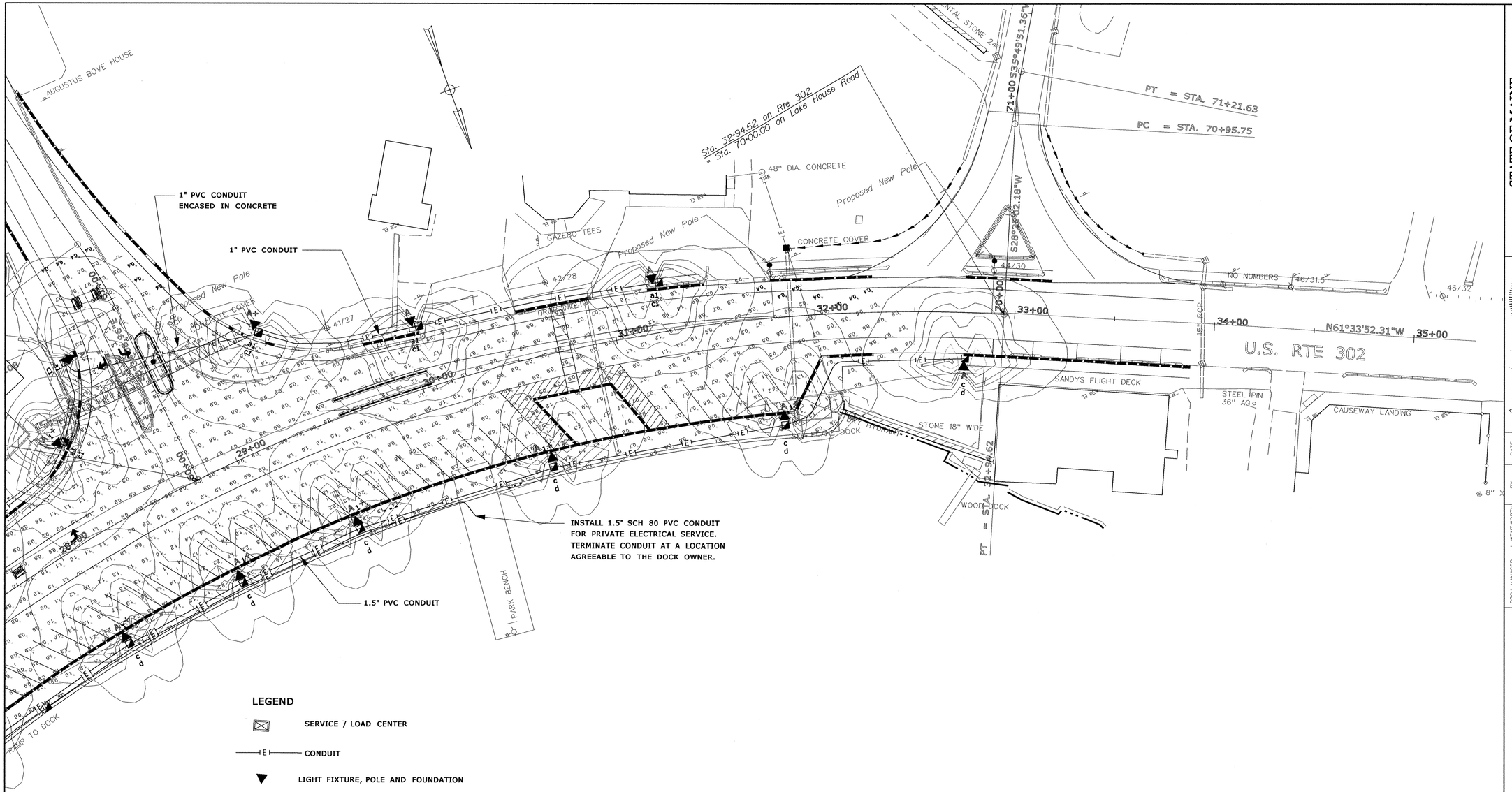

LEGEND

- SERVICE / LOAD CENTER
- CONDUIT
- LIGHT FIXTURE, POLE AND FOUNDATION
- JUNCTION BOX

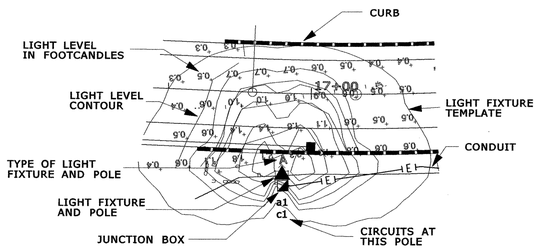

KEY TO PLAN

SERVICES -

SERVICE # 1
Circuit a: 208V / 20A
Circuit b: 120V / 20A
Circuit c: 120V / 20A
Circuit d: 208V / 20A

SERVICE # 2
Circuit a1: 208V / 20A
Circuit b1: 120V / 20A
Circuit c1: 120V / 20A
Circuit d1: 208V / 20A
Circuit f: 120V / 20A
Circuit g: 120V / 20A

LIGHTING FIXTURES AND POLES

▼ CYCLONE LIGHT FIXTURE AND POLE

A = CY55P1B/M204/PS50/BD57, 25 FT POLE
A+ = CY55P1B/M204/PS50/BD57, 30 FT POLE
B1 = CE21T4/PA40/BD55, 14.75 FT POLE
D = CBM1158, 42.25 IN HT. BOLLARD
WP = HID WALLPACK UNDER BRIDGE, 70W MH
A_1 = CY55P1B/M204/PS50/BD57, 25 FT POLE WITH CE21T4/M105 MOUNTED ON WALKWAY SIDE
A_1+ = CY55P1B/M204/PS50/BD57, 30 FT POLE WITH C321T4/M105 MOUNTED ON WALKWAYSIDE

STATE OF MAINE
DEPARTMENT OF TRANSPORTATION

BH-A106(000)

PIN 11060.00

HIGHWAY PLANS

STATE OF MAINE · ALBERT L. GODFREY No. 4226 · LICENSED PROFESSIONAL ENGINEER

SIGNATURE

4226
P.E. NUMBER

July 19, 2010
DATE

	J. WENTWORTH	BY	DATE
PROJ. MANAGER			
DESIGN-DETAILED	RAL	RAL	5/10
CHECKED-REVIEWED	ALG		5/10
DESIGN2-DETAILED2			
DESIGN3-DETAILED3			
REVISIONS 1	REV. PRIVATE SERVICES		7/22/10
REVISIONS 2	ADDED CE21T4 FIXTURES		7/19/10
REVISIONS 3			
REVISIONS 4			
FIELD CHANGES			

NAPLES
U.S. Rte 302

LIGHTING PLANS

SHEET NUMBER
144
OF 160

Filename: ...\HIGHWAY\MSTA\PlanSht3.dgn Division: HIGHWAY Username: jeason Date:7/19/2010

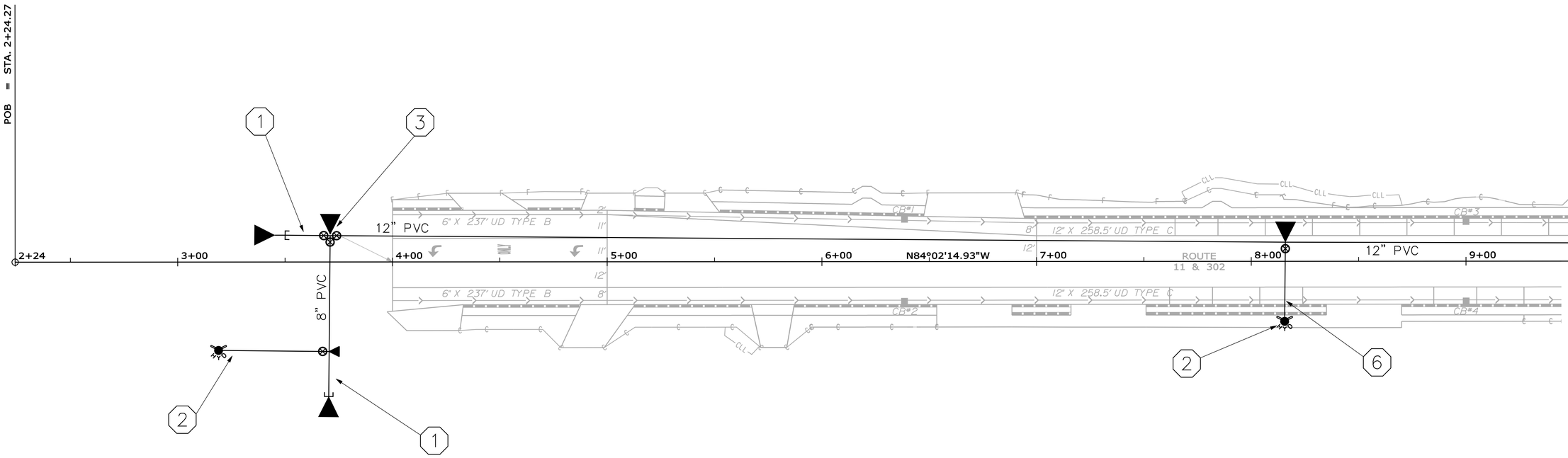

KEY NOTES :

1. END SECTION ASSEMBLY - END CAP W/THRUST BLOCK AND MINIMUM (1) FULL PIPE SECTION BEYOND TEE CONNECTION
2. HYDRANT ASSEMBLY
3. 12"x12"X8" TEE W/THUST BLOCK AND (3) GATE VALVES
4. GATE VALVE
5. 45° BEND W/ THRUST BLOCK
6. SEE WATER MAIN OFFSET DETAIL
7. NOT USED
8. FLUSHING VALVE ASSEMBLY
9. 22.5° BEND W/ THRUST BLOCK
10. 11.25° BEND W/ THRUST BLOCK
11. 4" PVC SLEEVE 5 FEET BEYOND LIMITS OF SIDEWALKS AND ROADWAY

LEGEND:

PVC	POLYVINYL CHLORIDE PIPE
HDPE	HIGH-DENSITY POLYETHYLENE PIPE
DI	DUCTILE IRON PIPE
	PROPOSED HYDRANT
	END CAP W/THRUST RESTRAINT BLOCK
	PROPOSED GATE VALVE
	FLUSHING VALVE ASSEMBLY

WATER MAIN QUANTITIES

Sheet No.	Stationing From	Stationing To	12" PVC Pipe	12" Ductile Iron Pipe	12" DR 11 Pipe Directional Boring (1)	8" PVC Pipe	4" PVC Sleeve	Hydrant Assembly (2)	Flushing Valve Assembly (3)	12" Gate Valve	8" Gate Valve	12"x12"x8" Tee	12" 45° Bend w/ Thrust Block	12" 22.5° Bend w/ Thrust Block	12" 11.25° Bend w/ Thrust Block	8" 11.25° Bend w/ Thrust Block	12" Restrained End Cap	8" Restrained End Cap
11	3+50	9+00	550		-	75	-	2	-	2	1	1	-	-	-	-	1	1
12	9+00	16+00	705		-	-	-	1	-	1	-	-	4	-	-	-	-	-
13	16+00	23+50	295	72	430	71	60	-	2	2	1	1	-	-	2	-	-	1
14	23+50	30+50	710		-	-	-	1	-	2	-	1	-	3	-	-	-	-
15	30+50	34+00	365		-	100	-	2	-	2	1	1	-	-	-	1	1	1
16	60+00	62+50	-		-	225	-	1	-	-	1	-	-	-	-	-	-	1
Total			**2625**	**72**	**430**	**471**	**60**	**7**	**2**	**9**	**4**	**4**	**4**	**3**	**2**	**1**	**2**	**4**

Notes:
(1) See River Crossing Section Notes, Sheet No. 147
(2) Hydrant Assembly incl. - Tee, 6" PVC pipe, gate valve, bends & thrust block
(3) Flushing Valve Assembly incl. - Tapping sleeve, 2" copper pipe, curb stop, operation rod, ball valve, nozzle and thrust block

STATE OF MAINE
DEPARTMENT OF TRANSPORTATION
BH-A106(000)
PIN 11060.00
HIGHWAY PLANS

JEFFREY K. CROCKER No. 5997 REGISTERED PROFESSIONAL ENGINEER STATE OF MAINE

SIGNATURE
P.E. NUMBER
DATE

	BY	DATE
REVISIONS 1		
REVISIONS 2		
REVISIONS 3		
REVISIONS 4		
FIELD CHANGES		

PROJ. MANAGER
DESIGN- DETAILED
CHECKED- REVIEWED
DESIGN2- DETAILED2
DESIGN3- DETAILED3

NAPLES
ROUTES 11\302

FIRE SUPRESSION SYSTEM PLANS

SHEET NUMBER
145
OF 160

Username: mark.poulin Date:7/22/2010
Division: HIGHWAY
Filename: ...\MSTA\145_FIRE_PLAN1.dgn

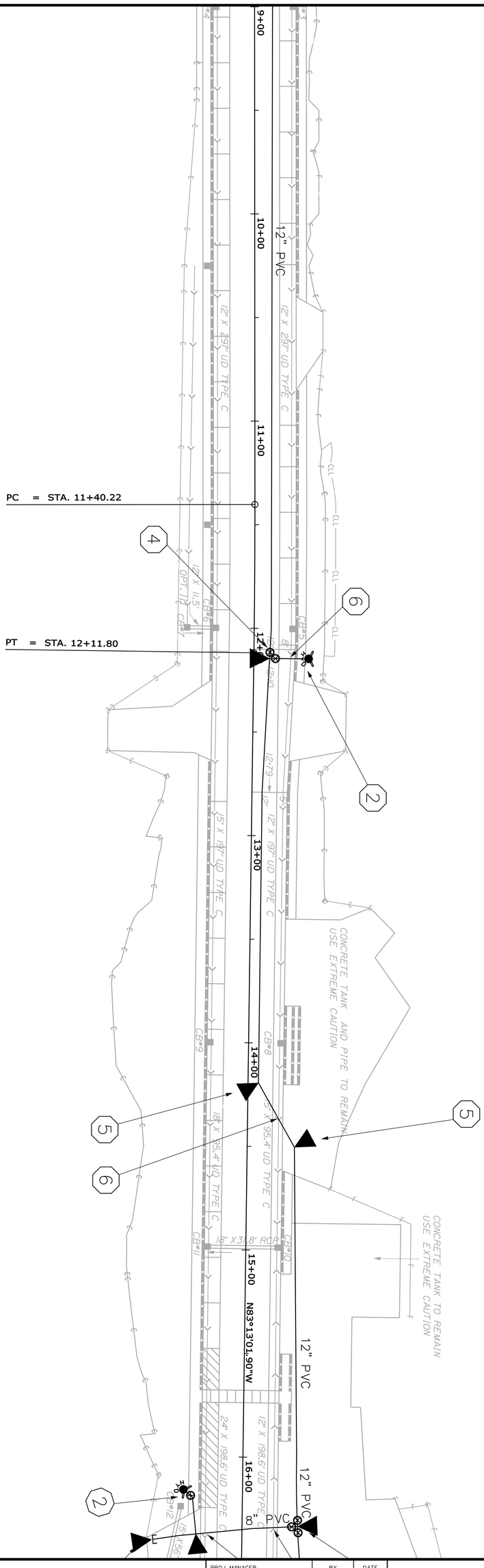

SHEET NUMBER 146 OF 160	NAPLES ROUTES 11\302 FIRE SUPRESSION SYSTEM PLANS	PROJ. MANAGER / DESIGN-DETAILED / CHECKED-REVIEWED / DESIGN2-DETAILED2 / DESIGN3-DETAILED3 / REVISIONS 1 / REVISIONS 2 / REVISIONS 3 / REVISIONS 4 / FIELD CHANGES (BY, DATE)	SIGNATURE P.E. NUMBER DATE JEFFREY K. CLIFFORD No. 5967 LICENSED PROFESSIONAL ENGINEER STATE OF MAINE
			STATE OF MAINE DEPARTMENT OF TRANSPORTATION BH-A106(000) PIN 11060.00 HIGHWAY PLANS

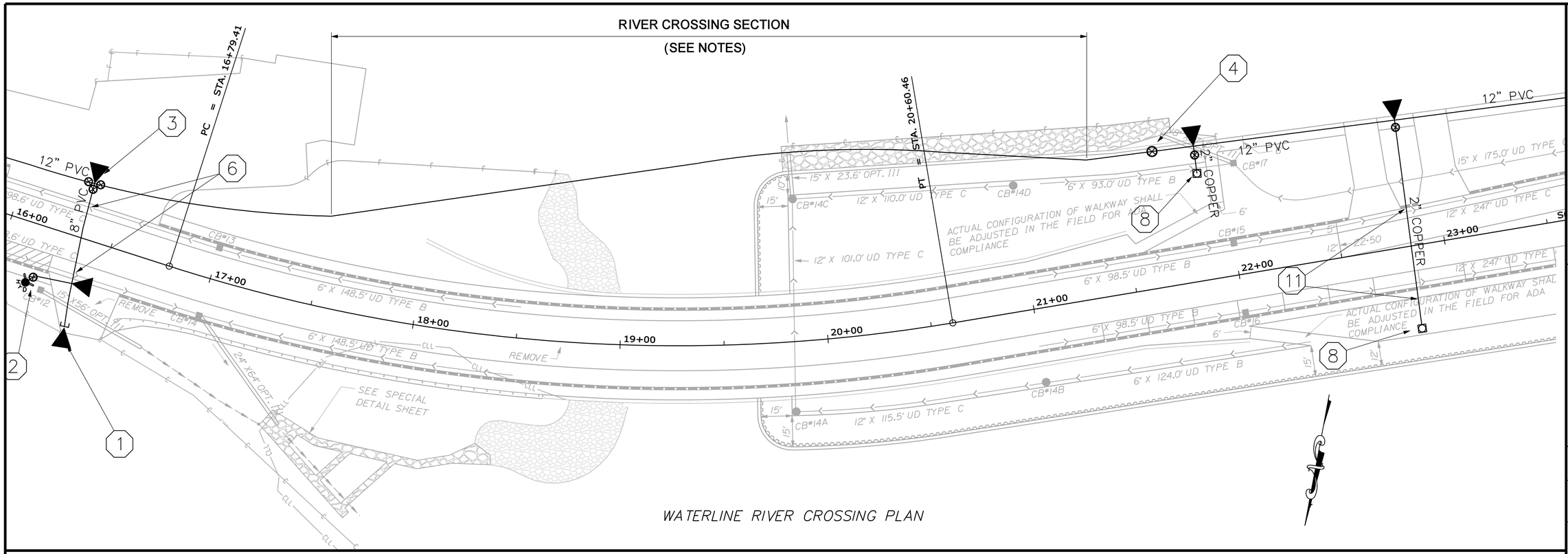

WATERLINE RIVER CROSSING PLAN

RIVER CROSSING SECTION NOTES:

1. The river crossing section shall consist of the following work:
   a. Install 12" HDPE (DR 11) pipe with horizontal directional bore
   b. 12" HDPE shall have with a minimum of 15 feet of cover at all points below the river bottom (approximate roadway Sta. 18+15 to Sta. 19+75) and a minimum 6 feet of cover beyond the limits of the river.
   c. Connect 12" HDPE pipe to (2) lengths of 12" DI pipe (class 52) at each end; (4) lengths of DI pipe total
   d. Install DI pipe with mechanical joints
   e. Install and maintain erosion and sediment control measures
2. Contractor may increase the depth of bury as necessary to adequately protect the pipe and environment. The depth of bury shall account for the installation means and methods including the subsurface conditions, contractor's drilling equipment, and the anticipated drilling fluid pressure. No contract adjustment will be allowed for increased depth of bury.
3. Contractor shall be responsible for the means and methods used to accomplish the horizontal directional bore.
4. With prior review and approval from the Engineer, the Contractor may, with sufficient justification, modify the length and alignment of the 12" HDPE pipe to accomplish the horizontal directional boring. No contract adjustment will be allowed for increased length of 12" HDPE pipe used at the contractor's convenience.
5. The river crossing shall:
   a. provide adequate cover over the pipe
   b. not subject the pipe to undue stress during or after installation
   c. not interfere with other utilities or bridge infrastructure
   d. not result in release of silt or drilling fluid to the river
6. Refer to water main specifications for additional information.

STATE OF MAINE
DEPARTMENT OF TRANSPORTATION

BH-A106(000)

PIN 11060.00

HIGHWAY PLANS

SIGNATURE

P.E. NUMBER

DATE

	BY	DATE
PROJ. MANAGER		
DESIGN-DETAILED		
CHECKED-REVIEWED		
DESIGN2-DETAILED2		
DESIGN3-DETAILED3		
REVISIONS 1		
REVISIONS 2		
REVISIONS 3		
REVISIONS 4		
FIELD CHANGES		

NAPLES
ROUTES 11\302

FIRE SUPRESSION SYSTEM PLANS

SHEET NUMBER
147
OF 160

Filename: ...\MSTA\147_FIRE_PLAN3.dgn Division: HIGHWAY Username: mark.poulin Date:7/22/2010

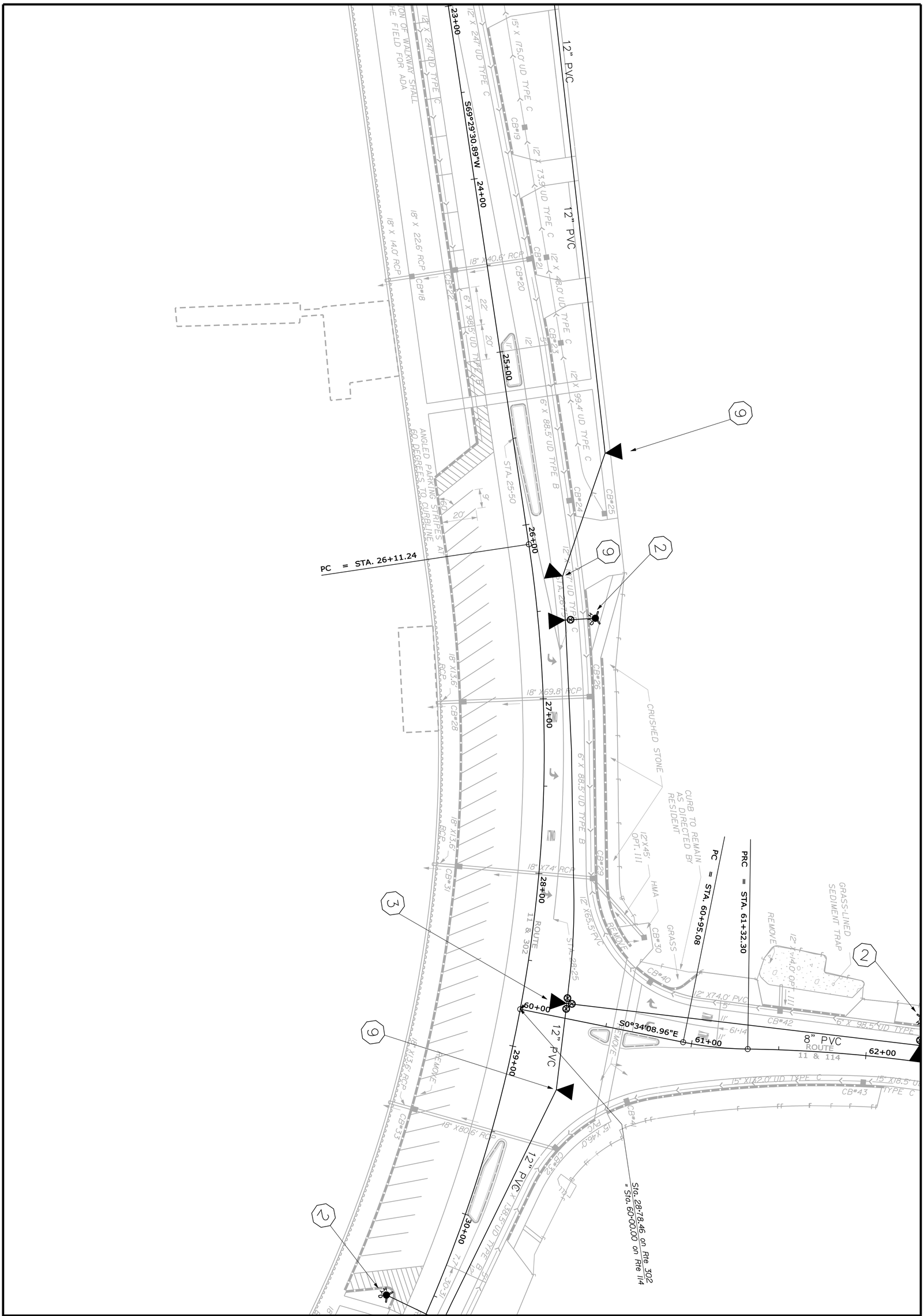

SHEET NUMBER 148 OF 160	NAPLES ROUTES 11\302	PROJ. MANAGER	BY / DATE
	FIRE SUPRESSION SYSTEM PLANS	DESIGN-DETAILED	
		CHECKED-REVIEWED	
		DESIGN2-DETAILED2	
		DESIGN3-DETAILED3	
		REVISIONS 1	
		REVISIONS 2	
		REVISIONS 3	
		REVISIONS 4	
		FIELD CHANGES	

SIGNATURE

P.E. NUMBER

DATE

JEFFREY K. CLIFFORD No. 5967 LICENSED PROFESSIONAL ENGINEER STATE OF MAINE

STATE OF MAINE
DEPARTMENT OF TRANSPORTATION

BH-A106(000)

PIN 11060.00 HIGHWAY PLANS

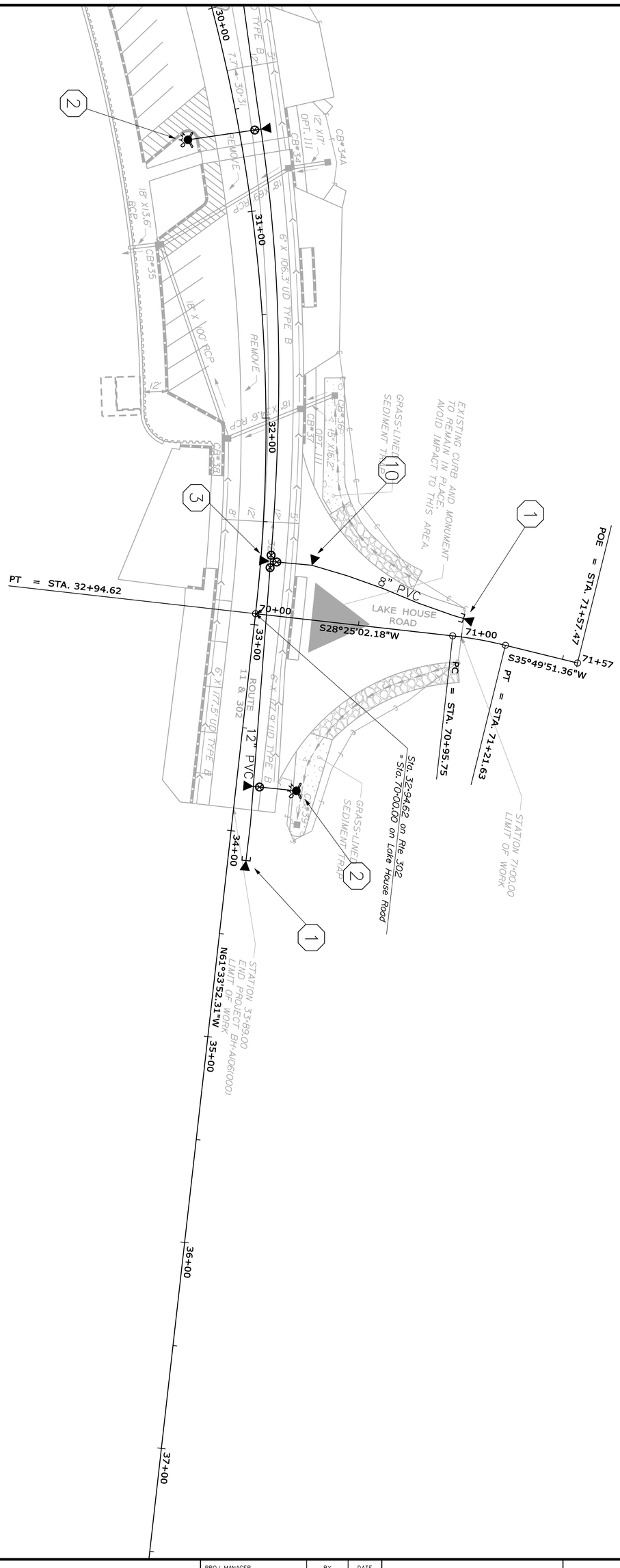

SHEET NUMBER 149 OF 160	NAPLES ROUTES 11\302 FIRE SUPRESSION SYSTEM PLANS	PROJ. MANAGER / DESIGN-DETAILED / CHECKED-REVIEWED / DESIGN2-DETAILED2 / DESIGN3-DETAILED3 / REVISIONS 1 / REVISIONS 2 / REVISIONS 3 / REVISIONS 4 / FIELD CHANGES (BY, DATE)	SIGNATURE P.E. NUMBER DATE JEFFREY K. CLIFFORD No. 5967 LICENSED PROFESSIONAL ENGINEER STATE OF MAINE
	STATE OF MAINE DEPARTMENT OF TRANSPORTATION BH-A106(000) PIN 11060.00		HIGHWAY PLANS

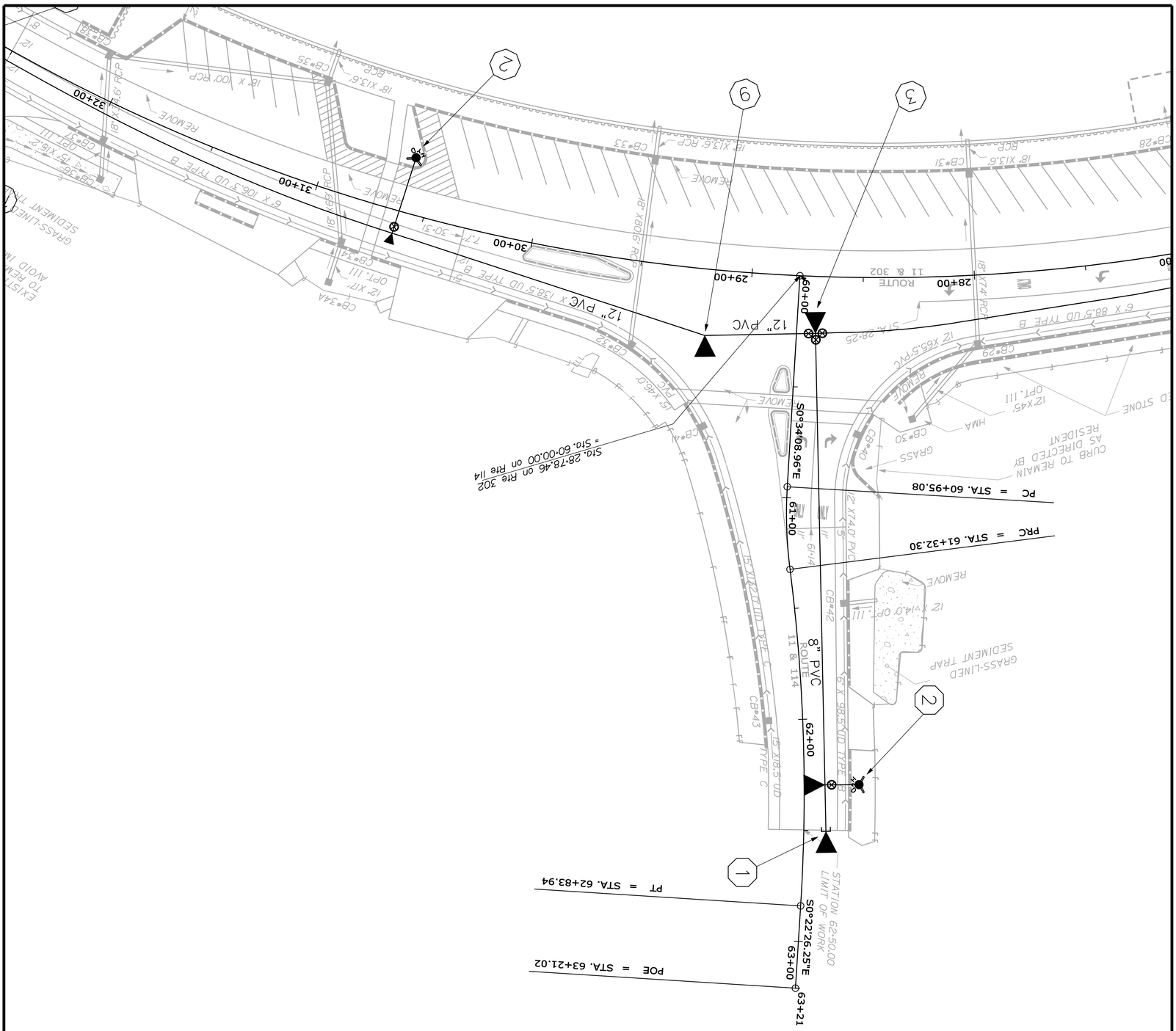

SHEET NUMBER 150 OF 160	NAPLES ROUTES 11\302 FIRE SUPRESSION SYSTEM PLANS	PROJ. MANAGER / DESIGN-DETAILED / CHECKED-REVIEWED / DESIGN2-DETAILED2 / DESIGN3-DETAILED3 / REVISIONS 1 / REVISIONS 2 / REVISIONS 3 / REVISIONS 4 / FIELD CHANGES (BY, DATE)	SIGNATURE P.E. NUMBER DATE JEFFREY K. CLIFFORD No. 5967 LICENSED PROFESSIONAL ENGINEER STATE OF MAINE
			STATE OF MAINE DEPARTMENT OF TRANSPORTATION BH-A106(000) PIN 11060.00 HIGHWAY PLANS

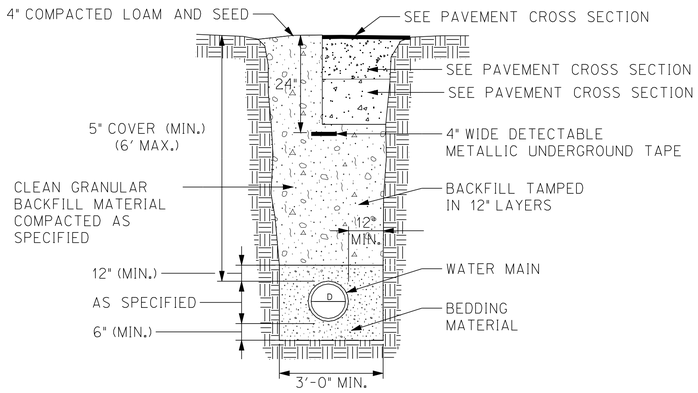

WATER MAIN TRENCH DETAIL
NOT TO SCALE

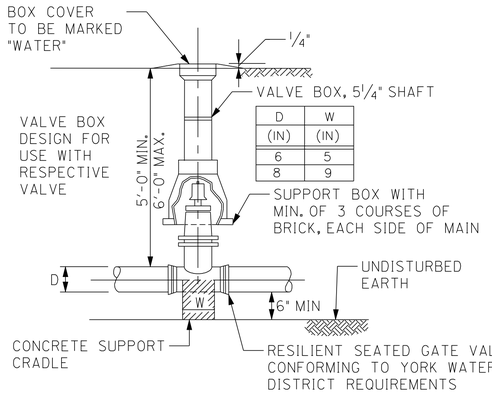

WATER VALVE DETAIL
NOT TO SCALE

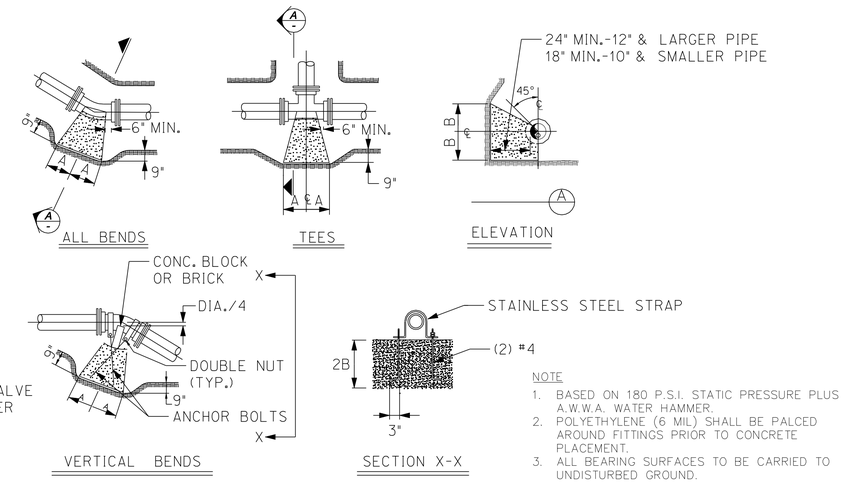

NOTE
1. BASED ON 180 P.S.I. STATIC PRESSURE PLUS A.W.W.A. WATER HAMMER.
2. POLYETHYLENE (6 MIL) SHALL BE PALCED AROUND FITTINGS PRIOR TO CONCRETE PLACEMENT.
3. ALL BEARING SURFACES TO BE CARRIED TO UNDISTURBED GROUND.

TYPE	SIZE	90° BENDS		45° BENDS		22-1/2° BENDS		11-1/4° BENDS		TEES		VERTICAL BEND	
		A	B	A	B	A	B	A	B	A	B	A	B
2000 P.S.F. SOIL	6" *	15"	12"	12"	9"	9"	6"	6"	6"	12"	21"	24"	21"
	8"	20"	15"	14"	12"	9"	9"	9"	6"	18"	12"	33"	24"
	10"	21"	21"	18"	15"	15"	9"	9"	9"	20"	18"	40"	27"
	12"	27"	24"	23"	15"	15"	12"	12"	9"	25"	18"	48"	30"
	16"	37"	30"	30"	21"	21"	15"	13"	12"	32"	24"	57"	36"

*6" OR LESS

THRUST BLOCK DETAIL
NOT TO SCALE

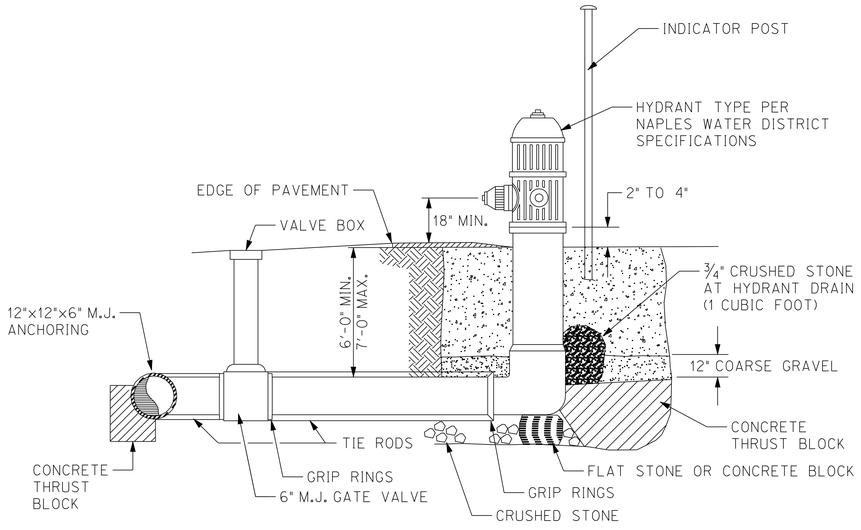

FIRE HYDRANT ASSEMBLY
NOT TO SCALE

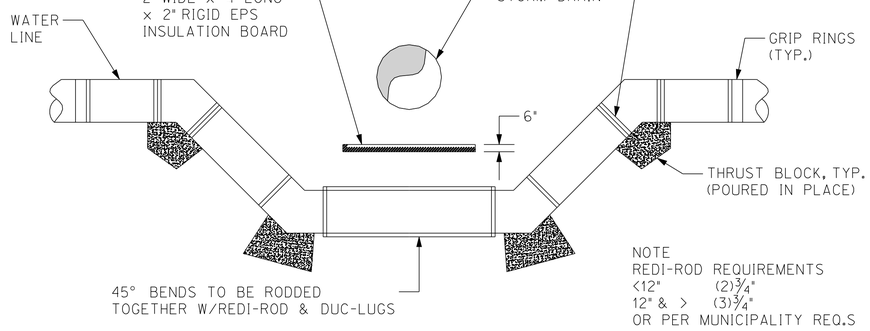

WATER MAIN OFFSET DETAIL
NOT TO SCALE

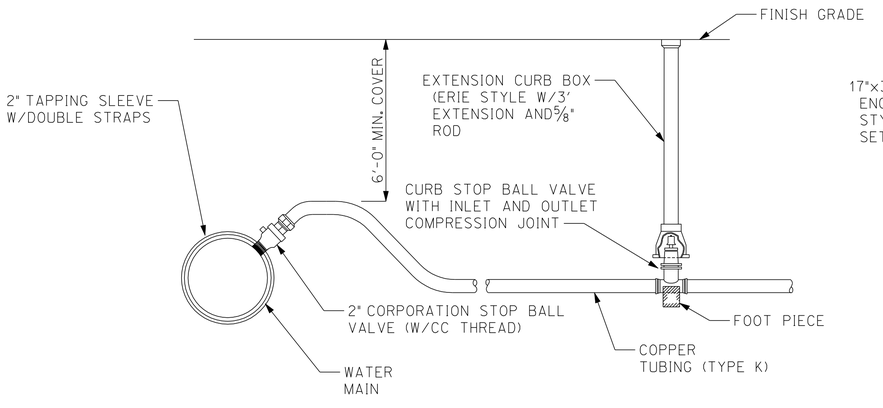

TYPICAL WATER SERVICE CONNETION
NOT TO SCALE

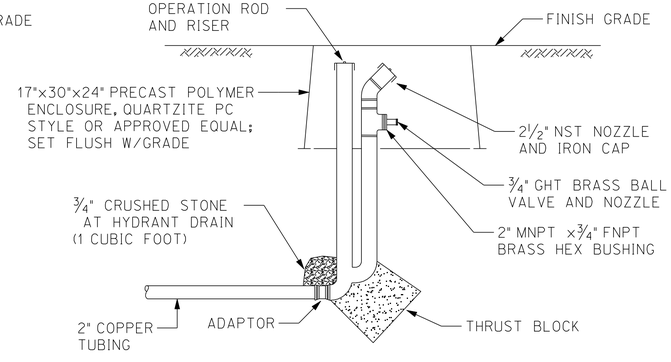

FLUSHING VALVE ASSEMBLY
NOT TO SCALE

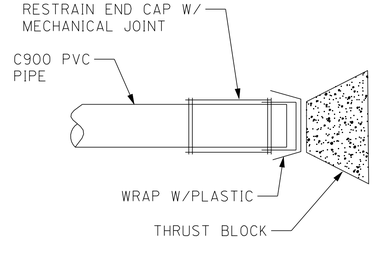

END CAP DETAIL
NOT TO SCALE

STATE OF MAINE
DEPARTMENT OF TRANSPORTATION
BH-A106(000)
PIN
11060.00
HIGHWAY PLANS

JEFFREY K. PULLEN
No. 5997
REGISTERED PROFESSIONAL ENGINEER
STATE OF MAINE

	SIGNATURE	P.E. NUMBER	DATE
BY			
DATE			

PROJ. MANAGER	
DESIGN-DETAILED	
CHECKED-REVIEWED	
DESIGN2-DETAILED2	
DESIGN3-DETAILED3	
REVISIONS 1	
REVISIONS 2	
REVISIONS 3	
REVISIONS 4	
FIELD CHANGES	

NAPLES
ROUTES 11\302

FIRE SUPRESSION SYSTEM PLANS

SHEET NUMBER
151
OF 160

Filename: ...\MSTA\151_FIRE_details.dgn Division: HIGHWAY Username: mark.poulin Date:7/22/2010

TAX MAP U-2
LOT 26

TAX MAP U-2
LOT 36

TAX MAP U-2
LOT 34

TAX MAP U-2
LOT 35

TAX MAP U-2
LOT 37A

TAX MAP U-2
LOT 37-1

SEE PLAN OF DEVELOPMENT
FOR FREELAND KNIGHT
BY C.R. STORER, INC.
1971
RECORDED CUMBERLAND COUNTY REGISTRY OF DEEDS
PLAN BOOK 86 PAGE 26

SEE BRANDY HEIGHTS SUBDIVISION
FOR DONALD M. MURCHIE
BY RONALD I. KENISTON
1981
RECORDED CUMBERLAND COUNTY REGISTRY OF DEEDS
PLAN BOOK 132 PAGE 5

GRID ZONE

R/W REFERENCE

U.S. ROUTE 302
CUMBERLAND COUNTY COMMISSIONERS RECORDS
VOL. 2 PAGE 174
1784
4 RODS

BRAY'S BREWING COMPANY, INC.
KNIGHT GENERATIONS IV, LLC
KNIGHT GENERATIONS VI, LLC
F. JOYCE FERNANDEZ
SAMUEL A. MERRIAM
DAWN M. MERRIAM
NORMAN W. CRIBBY, JR.
ROBERTA M. CRIBBY
~~MARGARET I. MACKAY~~
ESTATE OF MARGARET I. MACKAY
MARILYN E. MACKAY, PR
EDMUND D. LIPSON
PATRICIA J. LIPSON
DIANE CAROL GEISER
ITEM NO. (12)
TEMP. CONST. RIGHTS = 420± S.F. (1)
TOTAL AREA = 1.07± AC. (SURVEY-CALC.)

BRAY'S BREWING COMPANY, INC.
ITEM NO. (11)
TEMP. CONST. RIGHTS = 425± S.F. (1)
TOTAL AREA = 1.6± AC. (SURVEY)

KNIGHT GENERATIONS VI, LLC
ITEM NO. (13)
TEMP. CONST. RIGHTS = 705± S.F. (1)
TOTAL AREA = 1.1± AC. (SURVEY)

GLORIA R. WEBEL TRUSTEE OF HENRY E. WEBEL,
JR. FAMILY TRUST
GLORIA R. WEBEL SOLE TRUSTEE OF GLORIA
R. WEBEL LIVING TRUST
THOMAS GLEASON
SUZANNE GLEASON
RICHARD E. RIXFORD
CAROL A. RIXFORD
MADONNA F. FALK
BEVERLY J. PAUL f/k/a BEVERLY J. WARD
GARY C. CRAMER
MARGARET F. CRAMER
ITEM NO. (14)
TEMP. CONST. RIGHTS = 315± S.F. (1)
TOTAL AREA = 1.8± AC. (SURVEY)

GARY C. CRAMER
MARGARET F. CRAMER
ITEM NO. (15)
TEMP. CONST. RIGHTS = 0.07±AC. (1)
TOTAL AREA = 4.7± AC. (SURVEY)

TAX MAP U-2
LOT 25

SEE S.H.C. FILE NO. 3-117

BEGIN B.L.

TO CASCO

SEE S.H.C. FILE NO. 3-117

BLDG.

BAY VILLAGE ROAD

SAW MILL LANE

50'

P.L.

TEMP. CONSTRUCTION LIMITS
425± S.F.
420± S.F.
TEMP. CONST. LIMITS
TEMPORARY CONSTRUCTION
705± S.F.
LIMITS
TEMP. CONST. LIMITS
315± S.F.
TEMPORARY
CONSTRUCTION LIMITS
2428'±
TEMPORARY
0.07± AC.
CONSTRUCTION LIMITS

6" X 237' UD TYPE B
12" X 258.5' UD TYPE C
12" X 297'

32'±
34'±
18'±

4+00 +84± 5+00 +54± 6+00 +55± +05± 7+00 8+00 9+00 10+00

S.H. "14"
N 84°02'14.9" W
790.22'

BRIDGTON ROAD
U.S. ROUTE 302 + ROUTE 11

40.00'
37'±

544'±
204'±
4'±

425± S.F.
385± S.F.
TEMPORARY CONST. LIMITS

ROUTE 35
S.A.H. NO. 2

L. RICHARD AUCLAIR
ITEM NO. (1)
TEMP. CONST. RIGHTS = 810± S.F. (2)
TOTAL AREA = 1.33± AC. (CALC.)

N/F
ERNEST VILLENEUVE
KELLY VILLENEUVE

N/F
KNIGHT GENERATIONS IV LLC

N/F
CHARLES E. BROWN

BLDG.

FENCED " TENNIS COURT

TAX MAP U-2
LOT 9

TAX MAP U-2
LOT 8

TAX MAP U-2
LOT 7

TAX MAP U-2
LOT 10

20' R/W

R/W REFERENCE

U.S. ROUTE 302
CUMBERLAND COUNTY COMMISSIONERS RECORDS
VOL. 17 PAGE 473
1909
4 RODS (66')

ALSO SEE S.H.C. FILE NO. 3-98

SEE PLAN OF LOTS
OF RONALD KNIGHT
BY AHTI S. MARTIKAINEN
1970
RECORDED CUMBERLAND COUNTY REGISTRY OF DEEDS
PLAN BOOK 113 PAGE 66

SEE PLAN OF PROPERTY
FOR FREMONT A. + NORMA B. MERRIAM
BY RONALD I. KENNISTON
1981

R/W REFERENCE

ROUTE 35
CUMBERLAND COUNTY COMMISSIONERS RECORDS
VOL. 6 PAGE 265
1834
4 RODS

BAY OF NAPLES CONDOMINIUM ASSOCIATION, INC.
PARCEL NO. (2)
LAND TAKEN = 1165± S.F. (PRESC. EASE.)
LAND TAKEN = 0.30± AC. (OTHER)
TOTAL LAND TAKEN = 0.33± AC.
SLOPE EASE. = 0.16± AC. (1)
DRAINAGE EASE. = (1)
TEMP. CONST. RIGHTS = 0.17± AC. (2)
TOTAL AREA = 15.44± AC. (DEED)
REM. AREA = 15.11± AC.

BRIDGE NO. 2047
NAPLES BAY BRIDGE OVER CHUTE RIVER
PIN 11060.00

SYMBOLS
(MELL) (MELL)
GRADING LIMIT LINE
CONSTRUCTION LIMIT LINE
PROPERTY LINE - P.L. -
LIMITS OF TRAVELLIGHT PORTION (LOW P.)
EXISTING RIGHT OF WAY
NEW RIGHT OF WAY
NEW ROW WITHIN EXIST. ROW
CONTROL OF ACCESS
IP or ● RPP (IRON PIPE or PIN FOUND)
S.T. (SEPTIC TANK)
(ROW MONUMENT)
(TRAVERSE POINT)
WATER LINE
GAS LINE
ELECTRIC LINE
TELEPHONE LINE
SEWER LINE

ITEM	TECH	CHECKED
BASE MAP		P.N.S.
EXIST. R/W	D.W.B.	
PROP. LINES	D.W.B.	
AREAS	D.W.B.	

STATE OF MAINE
DEPARTMENT OF TRANSPORTATION
16 STATE HOUSE STATION - AUGUSTA, ME 04333-0016
NAPLES
RIGHT OF WAY MAP

REVISIONS

NO.	DATE	DESCRIPTION	BY
1	7-20-10	ITEM NO. (12)- ADDED ESTATE OF MARGARET I. MACKAY-MARILYN E. MACKAY, PR	D.W.B.

PLAN FILED IN PLAN BOOK PAGE COUNTY RECORD

NO.	GRANTOR	INSTRUMENT	DATE	BOOK	PAGE
		COND.	7/19/10	27922	109

DAVID A. COLE
COMMISSIONER
KENNETH L. SWEENEY
CHIEF ENGINEER
DATE

STATE OF MAINE
PETER A. BELANGER
1341
PROFESSIONAL LAND SURVEYOR

STATE HIGHWAY "14"
U.S. ROUTE 302 + ROUTE 11 (BRIDGTON ROAD)
NAPLES CUMBERLAND COUNTY
FEDERAL AID PROJECT NO. BH-A106(000)

APRIL 2010 | RIGHT-OF-WAY MAP | D.O.T. FILE NO. 3-565
SCALE 1"= 25' | SHEET 1 OF 7

SHEET NUMBER
152
OF 160

Filename: ...\00\ROW\MSTA\001_RWPLAN1.dgn Division: HIGHWAY Username: mark.poulin Date:7/22/2010

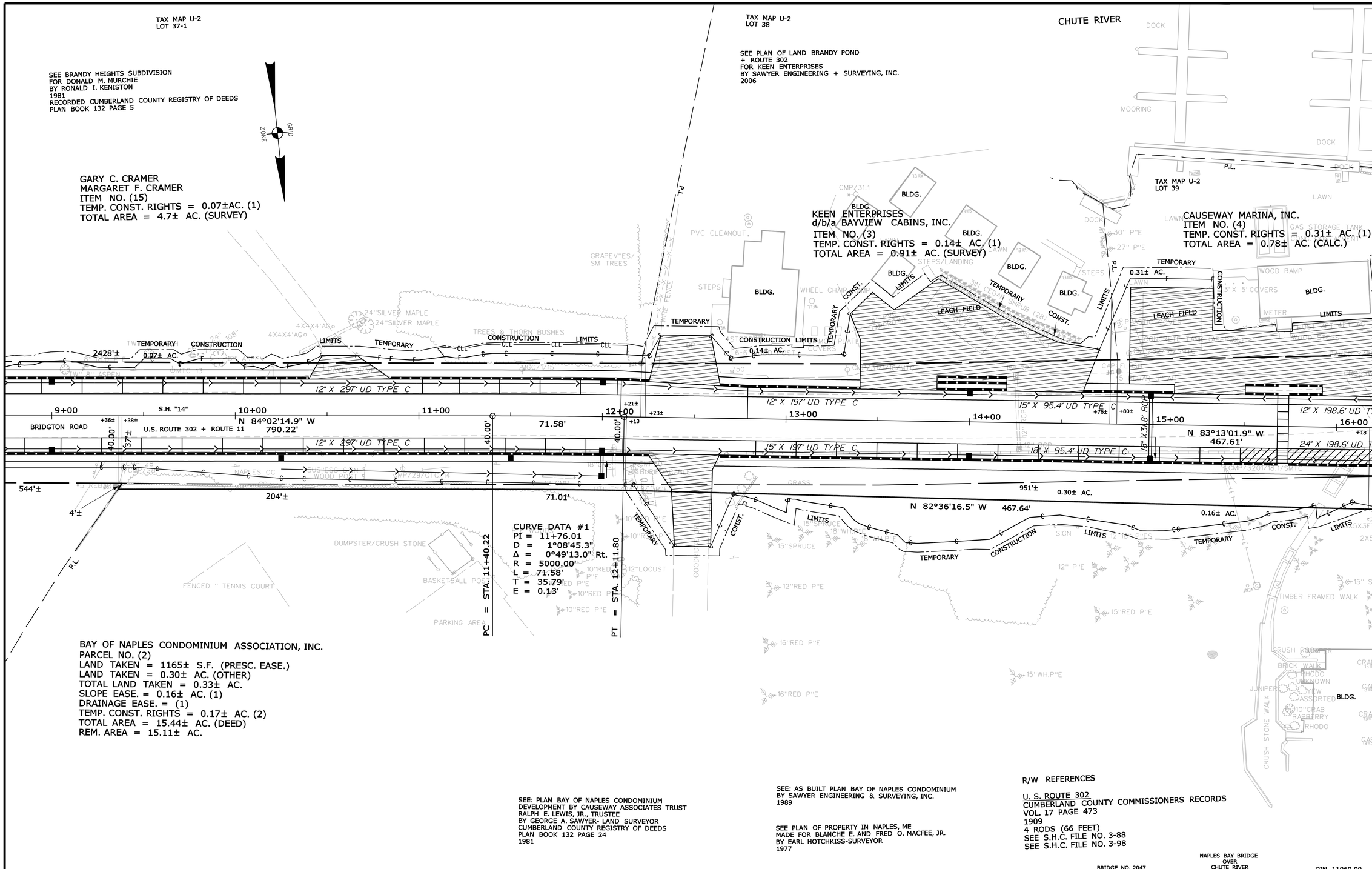

SEE: PLAN BAY OF NAPLES CONDOMINIUM
DEVELOPMENT BY CAUSEWAY ASSOCIATES TRUST
RALPH E. LEWIS, JR., TRUSTEE
BY GEORGE A. SAWYER- LAND SURVEYOR
CUMBERLAND COUNTY REGISTRY OF DEEDS
PLAN BOOK 132 PAGE 24
1981

SEE: AS BUILT PLAN BAY OF NAPLES CONDOMINIUM
BY SAWYER ENGINEERING & SURVEYING, INC.
1989

SEE PLAN OF PROPERTY IN NAPLES, ME
MADE FOR BLANCHE E. AND FRED O. MACFEE, JR.
BY EARL HOTCHKISS-SURVEYOR
1977

R/W REFERENCES

U. S. ROUTE 302
CUMBERLAND COUNTY COMMISSIONERS RECORDS
VOL. 17 PAGE 473
1909
4 RODS (66 FEET)
SEE S.H.C. FILE NO. 3-88
SEE S.H.C. FILE NO. 3-98

BRIDGE NO. 2047

NAPLES BAY BRIDGE
OVER
CHUTE RIVER

PIN 11060.00

SYMBOLS

- IP or ● IPF (IRON PIPE or PIN FOUND)
- ☐ S.T. (SEPTIC TANK)
- ⊡ (ROW MONUMENT)
- ⊿BM (TRAVERSE POINT)
- WELL (WELL)
- GRADING LIMIT LINE
- CONSTRUCTION LIMIT LINE
- PROPERTY LINE
- PL
- LIMITS OF WROUGHT PORTION (L.O.W.P.)
- EXISTING RIGHT OF WAY
- NEW RIGHT OF WAY
- NEW ROW WITHIN EXIST. ROW
- CONTROL OF ACCESS
- WATER LINE
- GAS LINE
- ELECTRIC LINE
- TELEPHONE LINE
- SEWER LINE

ITEM	TECH	CHECKED
BASE MAP		
EXIST. R/W	D.W.B.	
PROP. LINES	D.W.B.	
AREAS	D.W.B.	P.N.S.

STATE OF MAINE
DEPARTMENT OF TRANSPORTATION
16 STATE HOUSE STATION - AUGUSTA, ME 04333-0016
NAPLES
RIGHT OF WAY MAP

REVISIONS			
NO.	DATE	DESCRIPTION	BY

PLAN FILED IN PLAN BOOK PAGE COUNTY RECORD

NO.	GRANTOR	INSTRUMENT	DATE	BOOK	PAGE
		COND.	7/19/10	27922	109

DAVID A. COLE
COMMISSIONER
KENNETH L. SWEENEY
CHIEF ENGINEER
DATE

STATE OF MAINE
PETER A. BELANGER
1341
PROFESSIONAL LAND SURVEYOR

STATE HIGHWAY "14"
U.S. ROUTE 302 + ROUTE 11 (BRIDGTON ROAD)
NAPLES CUMBERLAND COUNTY
FEDERAL AID PROJECT NO. BH-A106(000)

APRIL 2010 | RIGHT-OF-WAY MAP | D.O.T. FILE NO. 3-565
SCALE 1" = 25' | SHEET 2 OF 7

SHEET NUMBER
153
OF 160

Filename: ...\00\ROW\MSTA\002_RWPLAN2.dgn Division: HIGHWAY Username: mark.poulin Date:7/22/2010

Filename: ...\00\ROW\MSTA\003_RWPLAN3.dgn Username: mark.poulin Date:7/22/2010 Division: HIGHWAY

CHUTE RIVER

SEE TOPO PLAN
THE VILLAGE EAT'N & MEET'N PLACE
ROUTE 302 NAPLES, ME
DALE & CLARA GREEN
7-26-93

TAX MAP U-1
LOT 1

TAX MAP U-2
LOT 39

CAUSEWAY MARINA, INC.
ITEM NO. (4)
TEMP. CONST. RIGHTS = 0.31± AC. (1)
TOTAL AREA = 0.78± AC. (CALC.)

RICHARD E. DYKE
ITEM NO. (16)
DRAINAGE EASE. = (1)
TEMP. CONST. RIGHTS = 145± S.F. (1)
TOTAL AREA = 0.79± AC. (CALC.)

SEE S.H.C. FILE NO. 3-88

CURVE DATA #2
PI = 18+73.62
Δ = 7°09'43.1"
D = 27°17'27.2" Lt.
R = 800.00'
L = 381.05'
T = 194.21'
E = 23.24'

PC STA. 16+79.41

PT STA. 20+60.46

DRAINAGE OUTLET
STA. 21+71± LT.

TEMPORARY CONSTRUCTION LIMITS
145± S.F.

LIMITS OF WROUGHT PORTION

15+00
N 83°13'01.9" W
467.61'

16+00
17+00
18+00
19+00
20+00
21+00
22+00
S 69°29'30.9" W
550.78'

2428'±

S.H. "14"
BRIDGTON ROAD
U.S. ROUTE 302 + ROUTE 11

12" X 198.6' UD TYPE C
24" X 198.6' UD TYPE C
6" X 148.5' UD TYPE B
6" X 98.5' UD TYPE B
6" X 124.0' UD TYPE B
12" X 101.0' UD TYPE C
12" X 110.0' UD TYPE C
15" X 23.6' OPT. III
12" X 115.5' UD TYPE

CB#14C
CB#14D
CB#14B
CB#14A

0.31± AC. TEMPORARY CONSTRUCTION
0.16± AC. TEMPORARY CONST.
0.30± AC.
0.16± AC.

951'± LIMITS OF WROUGHT PORTION
1165± S.F.
165± S.F.
192'±
381.05'
285.81'
118.74'
550.81'
S 70°06'57.8" W
1955 FILL LINE

TEMPORARY CONSTRUCTION LIMITS
SLOPE EASEMENT LIMITS
EASEMENT LIMITS
OUTLET DRAINAGE STRUCTURE
STA. 17+33± RT.

LOWEST WATER DRAWDOWN LEVEL - ELEVATION 261.9' - NAVD88 (262.5' MSL)

LOWEST WATER DRAWDOWN LEVEL - ELEVATION 261.9' - NAVD88 (262.5' MSL)

BAY OF NAPLES CONDOMINIUM ASSOCIATION, INC.
PARCEL NO. (2)
LAND TAKEN = 1165± S.F. (PRESC. EASE.)
LAND TAKEN = 0.30± AC. (OTHER)
TOTAL LAND TAKEN = 0.33± AC.
SLOPE EASE. = 0.16± AC. (1)
DRAINAGE EASE. = (1)
TEMP. CONST. RIGHTS = 0.17± AC. (2)
TOTAL AREA = 15.44± AC. (DEED)
REM. AREA = 15.11± AC.

TOE OF SLOPE DITCH
STA. 16+90± RT. TO STA. 17+90± RT.

TOE OF SLOPE DITCH
STA. 17+50± RT. TO STA. 18+27± RT.

NOTE: PRESCRIPTIVE EASEMENT FOR HIGHWAY PURPOSES WITHIN LIMITS OF WROUGHT PORTION

LONG LAKE

R/W REFERENCES
U. S. ROUTE 302
CUMBERLAND COUNTY COMMISSIONERS RECORDS
VOL. 17 PAGE 473
1909
4 RODS (66 FEET)
ALSO SEE S.H.C. FILE NO. 3-88
ALSO SEE S.H.C. FILE NO. 3-98

BRIDGE NO. 2047 — NAPLES BAY BRIDGE OVER CHUTE RIVER — PIN 11060.00

SYMBOLS
- IP or ●PIP (IRON PIPE or PIN FOUND)
- ST. (SEPTIC TANK)
- (ROW MONUMENT)
- ⊿BM (TRAVERSE POINT)
- ○WELL (WELL)
- GRADING LIMIT LINE
- CONSTRUCTION LIMIT LINE
- PROPERTY LINE - PL -
- LIMITS OF "RIGHT-OF-WAY" PORTION (L.O.W.P.)
- EXISTING RIGHT OF WAY
- NEW RIGHT OF WAY
- NEW ROW WITHIN EXIST. ROW
- CONTROL OF ACCESS
- W WATER LINE
- G GAS LINE
- E ELECTRIC LINE
- T TELEPHONE LINE
- SEWER LINE

ITEM	TECH	CHECKED
BASE MAP		
EXIST. R/W	D.W.B.	
PROP. LINES	D.W.B.	
AREAS	D.W.B.	P.N.S.

STATE OF MAINE
DEPARTMENT OF TRANSPORTATION
16 STATE HOUSE STATION - AUGUSTA, ME 04333-0016

NAPLES
RIGHT OF WAY MAP

REVISIONS			
NO.	DATE	DESCRIPTION	BY

PLAN FILED IN PLAN BOOK PAGE COUNTY RECORD

NO.	GRANTOR	INSTRUMENT	DATE	BOOK	PAGE
		COND.	7/19/10	27922	109

DAVID A. COLE
COMMISSIONER
KENNETH L. SWEENEY
CHIEF ENGINEER
DATE

STATE OF MAINE · PETER A. BELANGER 1341 · PROFESSIONAL LAND SURVEYOR

STATE HIGHWAY "14"
U.S. ROUTE 302 + ROUTE 11 (BRIDGTON ROAD)
NAPLES CUMBERLAND COUNTY
FEDERAL AID PROJECT NO. BH-A106(000)

APRIL 2010 | RIGHT-OF-WAY MAP | D.O.T. FILE NO. 3-565
SCALE 1" = 25' | SHEET 3 OF 7

SHEET NUMBER
154
OF 160

Filename: ...\00\ROW\MSTA\004_RWPLAN4.dgn Username: mark.poulin Division: HIGHWAY Date:7/22/2010

TAX MAP U-1 LOT 1

SEE TOPO PLAN
THE VILLAGE EAT'N & MEET'N PLACE
ROUTE 302 NAPLES, ME
DALE & CLARA GREEN
7-26-93

RICHARD E. DYKE
ITEM NO. (16)
DRAINAGE EASE. = (1)
TEMP. CONST. RIGHTS = 145± S.F. (1)
TOTAL AREA = 0.79± AC. (CALC.)

DRAINAGE OUTLET
STA. 21+71± LT.

TEMPORARY CONSTRUCTION LIMITS
145± S.F.

TAX MAP U-1 LOT 2

N/F
NANCY J. HANSON

TAX MAP U-1 LOT 3A

TAX MAP U-1 LOT 3

N/F
EVERGREEN CREDIT UNION

N/F
KRISTOPHER M. KLIMEK

TAX MAP U-1 LOT 4

N/F
NAPLES CASINO, INC.

CURVE DATA #1
PI = 61+13.74
D = 28°38'52.4"
Δ = 10°39'54.3" Lt.
R = 200.00'
L = 37.23'
T = 18.67'
E = 0.87'
PRC =
PC =
Sta. 28+78.46 on Rte 302
= Sta. 60+00.00 on Rte 114

2428'±

S.H. "14"
BRIDGTON ROAD
U.S. ROUTE 302 + ROUTE 11

CB#14D
6' X 93.0' UD TYPE B
15" X 175.0' UD TYPE C
12" X 73.9' UD TYPE C
12" X 48.0' UD TYPE C
12" X 99.4' UD TYPE C
12" X 247' UD TYPE C
6' X 98.5' UD TYPE B
12" X 107' UD TYPE C
6' X 88.5' UD TYPE B

21+00 22+00 23+00 24+00 25+00 26+00 27+00 28+00

S 69°29'30.9" W
550.78'

683.38'

18" X 22.6' RCP
18"-X- 14.0'-RCP

1955 FILL LINE

CB#14B
6' X 124.0' UD TYPE B

550.81' S 70°06'57.8" W

66.00'

504'±

LOWEST WATER DRAWDOWN LEVEL - ELEVATION 261.9' - NAVD88 (262.5' MSL)

EXISTING DRAINAGE
SEE S.H.C. FILE NO. 3-98

PROPOSED RETAINING WALL

WHARF
N/F
SALLY A. CHASE
CATHY K. WAKEFIELD
CARLA K. McWALTERS
CARLTON K. CHASE
CONRAD K. CHASE
SHAWN A. CHASE
(OWNER OF RECORD)

WHARF-CLAIMED BY:
AIR-MARINE CORP.- UNRECORDED DEED

LONG LAKE

R/W REFERENCES
U. S. ROUTE 302
CUMBERLAND COUNTY COMMISSIONERS RECORDS
VOL. 17 PAGE 473
1909
4 RODS (66 FEET)
ALSO SEE S.H.C. FILE NO. 3-88
ALSO SEE S.H.C. FILE NO. 3-98

NOTE: PRESCRIPTIVE EASEMENT FOR HIGHWAY PURPOSES WITHIN LIMITS OF WROUGHT PORTION

CURVE DATA #3
PI = 29+75.35
D = 7°09'43.1"
Δ = 48°56'36.8" Rt.
R = 800.00'
L = 683.38'
T = 364.11'
E = 78.96'

PC = STA. 26+11.24

WHARF
N/F
NAPLES CASINO, INC.

LOWEST WATER DRAWDOWN LEVEL - ELEVATION 261.9' - NAVD88 (262.5' MSL)

BRIDGE NO. 2047

NAPLES BAY BRIDGE
OVER
CHUTE RIVER

PIN 11060.00

SYMBOLS

(WELL)
GRADING LIMIT LINE
CONSTRUCTION LIMIT LINE
PROPERTY LINE P.L.
LIMITS OF WROUGHT PORTION (LOW P.)
EXISTING RIGHT OF WAY
NEW RIGHT OF WAY
NEW ROW WITHIN EXIST. ROW
CONTROL OF ACCESS
IP or ● P/P (IRON PIPE or PIN FOUND)
S.T. (SEPTIC TANK)
(ROW MONUMENT)
(TRAVERSE POINT)
WATER LINE
GAS LINE
ELECTRIC LINE
TELEPHONE LINE
SEWER LINE

ITEM	TECH	CHECKED
BASE MAP		
EXIST. R/W	D.W.B.	
PROP. LINES	D.W.B.	
AREAS	D.W.B.	P.N.S.

STATE OF MAINE
DEPARTMENT OF TRANSPORTATION
16 STATE HOUSE STATION - AUGUSTA, ME 04333-0016

NAPLES
RIGHT OF WAY MAP

REVISIONS

NO.	DATE	DESCRIPTION	BY

PLAN FILED IN PLAN BOOK PAGE COUNTY RECORD

NO.	GRANTOR	INSTRUMENT	DATE	BOOK	PAGE
		COND.	7/19/10	27922	109

DAVID A. COLE
COMMISSIONER
KENNETH L. SWEENEY
CHIEF ENGINEER
DATE

STATE OF MAINE
PETER A. BELANGER 1341
PROFESSIONAL LAND SURVEYOR

STATE HIGHWAY "14"
U.S. ROUTE 302 + ROUTE 11 (BRIDGTON ROAD)
NAPLES CUMBERLAND COUNTY
FEDERAL AID PROJECT NO. BH-A106(000)

APRIL 2010 | RIGHT-OF-WAY MAP | D.O.T. FILE NO. 3-565
SCALE 1"= 25' | SHEET 4 OF 7

SHEET NUMBER
155
OF 160

Filename: ...\00\ROW\MSTA\005_RWPLAN5.dgn Username: mark.poulin Date:7/22/2010 Division: HIGHWAY

N/F JAMES M. BUILD

TAX MAP U-1 LOT 7

TAX MAP U-1 LOT 4

N/F NAPLES CASINO, INC.

TAX MAP U-1 LOT 16

TAX MAP U-1 LOT 17

TAX MAP U-25 LOT 17

TAX MAP U-25 LOT 18

TAX MAP U-25 LOT 28

TEMPORARY CONST. LIMITS 80± S.F.

LEACH FIELD-APPROX.

DAVID STETSON
ARLENE STETSON
PARCEL NO. (5)
LAND TAKEN = 740± S.F.
TEMP. CONST. RIGHTS = 465± S.F. (2)
TOTAL AREA = 1.1± AC. (CALC.)
REM. AREA = 1.08± AC.

SEE S.H.C. FILE NO. 67.69

ROUTE 11 + 114

S.H. NO. 12500

12" X 14.0' OPT. III

12" X 65.5' PVC

CURVE DATA #1
PI = 61+13.74
D = 28°38'52.4"
Δ = 10°39'54.3" Lt.
R = 200.00'
L = 37.23'
T = 18.67'
E = 0.87'

PRC = STA. 61+82.31

PC = STA. 60+95.08

Sta. 28+78.46 on Rte 302
= Sta. 60+00.00 on Rte 114

100'± 97.32'

32'±

37'± BLDG.

69'±

61'±

TEMPORARY CONSTRUCTION LIMITS

740± S.F.

N/F BRIAN G. HOCKNEY

HOCKNEY SEPTIC SYSTEM EASEMENT

APPROXIMATE CORNER

GRID ZONE

BLDG.

R/W

P.L.

GAZEBO TEES
ITEM NO. (6)
TEMP. CONST. RIGHTS = 560± S.F. (1)
TOTAL AREA = 0.59± AC. (CALC.)

SEE COMPOSITE PLAN OF LAND FOR GEORGE HOCKNEY BY RONALD I. KENISTON, RLS 1990

POE = STA. 71+57.47

CUMBERLAND COUNTY COMMISSIONERS RECORDS VOL. 14 PAGE 55 3.5 RODS (57.75')

LAKE HOUSE ROAD

71+57

CURVE DATA #1
PI = 71+08.71
D = 28°38'52.4"
Δ = 7°24'49.2" Rt.
R = 200.00'
L = 25.88'
T = 12.96'
E = 0.42'

PT = STA. 71+21.6

PC = STA. 70+95.75

SEE PLAN OF LAND FOR BETH CHAPLIN BY SAWYER ENGINEERING 2003 REVISION 12-05-03

Sta. 32-94.62 on Rte 302
= Sta. 70+00.00 on Lake House Road

JOHN W. DONOVAN
PARCEL NO. (8)
LAND TAKEN = 885± S.F. (PRESC. EASE.)
LAND TAKEN = 225± S.F. (OTHER)
TOTAL LAND TAKEN = 1110± S.F.
TEMP. CONST. RIGHTS = 545± S.F. (1)
TOTAL AREA = 3.2± AC. (CALC.)
REM. AREA = 3.17± AC.

225± S.F.

37'± LIMITS

31'±

36'±

(58'±)

71+00

END B.L.

TEMP. CONSTRUCTION

52'±

50.80'

885± S.F.

91'±

1620± S.F.

7'±

6" X 177.9' UD TYPE B

N 61°33'52.3" W 205.38'

34+00

33+00

32+00

31+00

30+00

29+00

28+00

27+00

6" X 88.5' UD TYPE B

6" X 145.5' UD TYPE B

6" X 106.3' UD TYPE B

STATE HIGHWAY 14
U.S. ROUTE 302 - ROUTE 11
BRIDGTON ROAD

S 0°34'09.0" E 95.08'

69+00

2428'±

683.38'

504'±

1955 FILL LINE

SHORE LINE± PRE 1955

66.00'

40.00'

33'±

55.00'

149'±

16'±

15'±

50'±

BLDG.

38'±

12'±

1175± S.F.

TEMPORARY CONSTRUCTION LIMITS

183'±

111'±

59'±

EXISTING DRAINAGE EASEMENT SEE S.H.C. FILE NO. 3-98

215± S.F.

WOOD DECK

CONCRETE PAD

CURVE DATA #3
PI = 29+75.35
D = 7°09'43.1"
Δ = 48°56'36.8" Rt.
R = 800.00'
L = 683.38'
T = 364.11'
E = 78.96'

PROPOSED RETAINING WALL

WHARF
N/F
TOWN OF NAPLES

FLAG BENCH

FLAG POLE

LOWEST WATER DRAWDOWN LEVEL - ELEVATION 261.9' - NAVD88 (262.5' MSL)

LONG LAKE

WHARF
N/F
NAPLES CASINO, INC.

MOORINGS

JAMES M. BUILD
PARCEL NO. (9)
LAND TAKEN = 1195± S.F. (UNDERWATER)
LAND TAKEN = 120± S.F. (OTHER)
TOTAL LAND TAKEN = 1315± S.F.
TEMP. CONST. RIGHTS = 1390± S.F. (2)
TOTAL AREA = 0.71± AC. (CALC.)
REM. AREA = 0.68± AC.

JAMES M. BUILD
BARBARA I. ZSIGA
HEIRS OF EVERETT E. BEAN
PARCEL NO. (7)
LAND TAKEN = 0.07± AC. (UNDERWATER)
LAND TAKEN = 775± S.F. (OTHER)
TOTAL LAND TAKEN = 0.09± AC. (ENTIRE LOT)
BUILDING = (1)

STA. 32+94.62

TAX MAP U-25 LOT 16

TAX MAP U-25 LOT 14

HISTORIC N

EXISTING DRAINAGE EASEMENT SEE S.H.C. FILE NO. 3-98

SEE PLAN OF LAND FOR MICHAEL & JANICE DONOGHUE BY SAWYER ENGINEERING & SURVEYI 2001

SEE PLAN OF PROPERTY FOR MAURICE GEMME BY CULLENBERG LAND SURVEYING 1993 RECORDED CUMBERLAND COUNTY REGISTRY OF D PLAN BOOK 196 PAGE 85

1/2" IRF/BC/18" CMP

LOWEST WATER DRAWDOWN LEVEL - ELEVATION 261.9' - NAVD88 (262.5' MSL)

NAPLES BAY BRIDGE OVER CHUTE RIVER

BRIDGE NO. 2047

PIN 11060.00

R/W REFERENCES

U. S. ROUTE 302

CUMBERLAND COUNTY COMMISSIONERS RECORDS
VOL. 17 PAGE 473
1909
4 RODS (66 FEET)

ALSO SEE S.H.C. FILE NO. 3-98

SYMBOLS

- IP or ● P/P (IRON PIPE or PIN FOUND)
- S.T. (SEPTIC TANK)
- (ROW MONUMENT)
- ⊕DM (TRAVERSE POINT)
- (MELL)
- GRADING LIMIT LINE
- CONSTRUCTION LIMIT LINE
- PROPERTY LINE - P.L. -
- LIMITS OF WRK/LIGHT PORTION (LOW.P.)
- EXISTING RIGHT OF WAY
- NEW RIGHT OF WAY
- NEW ROW WITHIN EXIST. ROW
- CONTROL OF ACCESS
- W WATER LINE
- G GAS LINE
- E ELECTRIC LINE
- T TELEPHONE LINE
- SEWER LINE

ITEM	CHECKED	TECH
BASE MAP		D.W.B.
EXIST. R/W		D.W.B.
PROP. LINES		D.W.B.
AREAS	P.N.S.	D.W.B.

STATE OF MAINE
DEPARTMENT OF TRANSPORTATION
16 STATE HOUSE STATION - AUGUSTA, ME 04333-0016

NAPLES
RIGHT OF WAY MAP

REVISIONS

NO.	DATE	DESCRIPTION	BY

PLAN FILED IN PLAN BOOK PAGE COUNTY RECORD

NO.	GRANTOR	INSTRUMENT	DATE	BOOK	PAGE
		COND.	7/19/10	27922	109

DAVID A. COLE
COMMISSIONER
KENNETH L. SWEENEY
CHIEF ENGINEER
DATE

STATE OF MAINE · PETER A. BELANGER 1341 · PROFESSIONAL LAND SURVEYOR

STATE HIGHWAY "14"
U.S. ROUTE 302 + ROUTE 11 (BRIDGTON ROAD)
NAPLES CUMBERLAND COUNTY
FEDERAL AID PROJECT NO. BH-A106(000)

APRIL 2010 | RIGHT-OF-WAY MAP | D.O.T. FILE NO. 3-565
SCALE 1" = 25' | SHEET 5 OF 7

SHEET NUMBER
156
OF 160

Filename: ...\00\ROW\MSTA\006_RWPLAN6.dgn Division: HIGHWAY Username: mark.poulin Date:7/22/2010

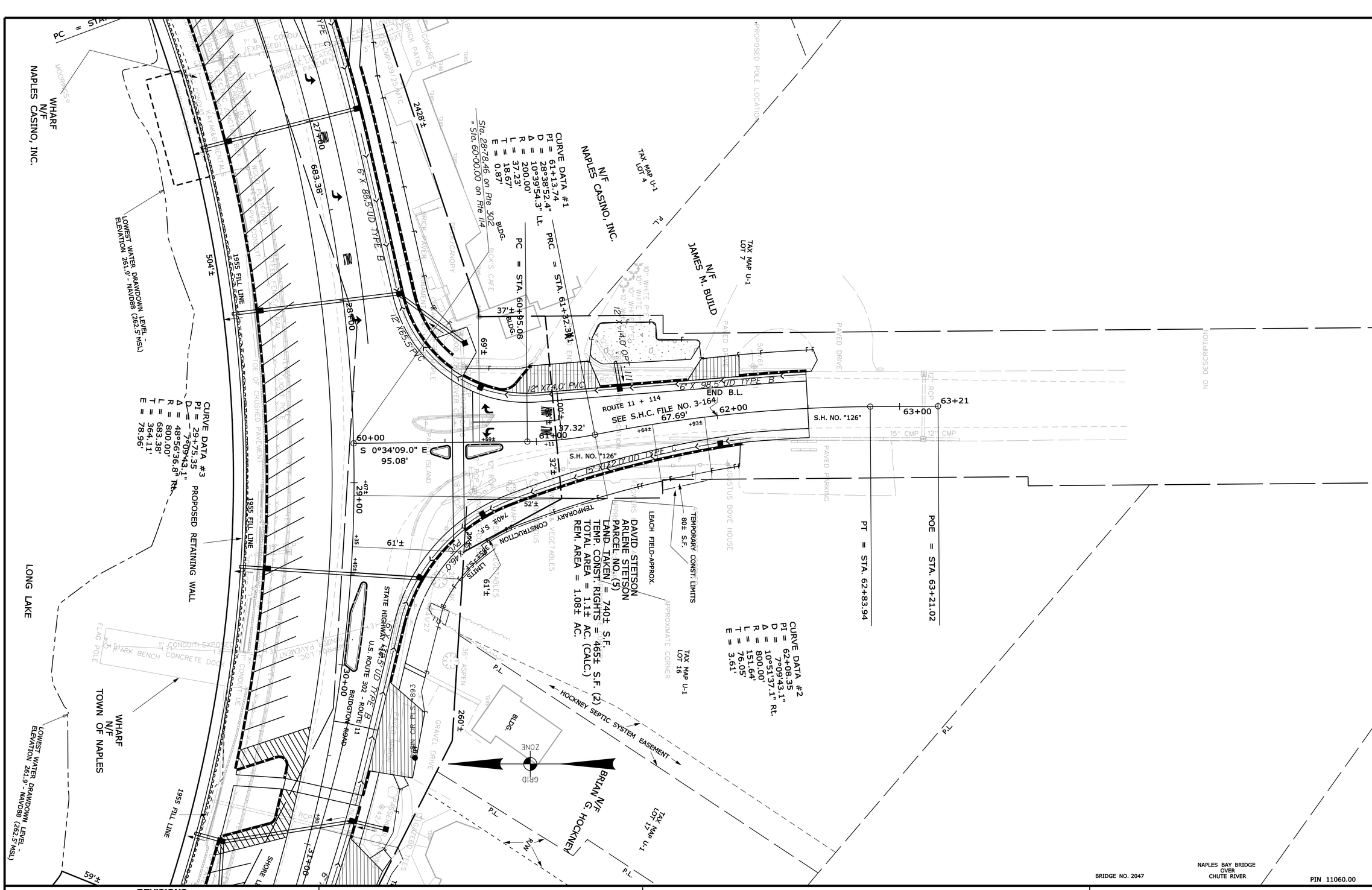

ITEM	TECH	CHECKED
BASE MAP		
EXIST. R/W	D.W.B.	
PROP. LINES	D.W.B.	
AREAS	D.W.B.	P.N.S.

STATE OF MAINE
DEPARTMENT OF TRANSPORTATION
16 STATE HOUSE STATION - AUGUSTA, ME 04333-0016
NAPLES
RIGHT OF WAY MAP

BRIDGE NO. 2047
NAPLES BAY BRIDGE OVER CHUTE RIVER
PIN 11060.00

REVISIONS

NO.	DATE	DESCRIPTION	BY

PLAN FILED IN PLAN BOOK		PAGE	COUNTY RECORD			
NO.	GRANTOR		INSTRUMENT	DATE	BOOK	PAGE
			COND.	7/19/10	27922	109

DAVID A. COLE
COMMISSIONER
KENNETH L. SWEENEY
CHIEF ENGINEER
DATE

STATE OF MAINE
PETER A. BELANGER
1341
PROFESSIONAL LAND SURVEYOR

STATE HIGHWAY "14"
U.S. ROUTE 302 + ROUTE 11 (BRIDGTON ROAD)
NAPLES CUMBERLAND COUNTY
FEDERAL AID PROJECT NO. BH-A106(000)

APRIL 2010	RIGHT-OF-WAY MAP	D.O.T. FILE NO. 3-565
SCALE 1" = 25'	SHEET 6 OF 7	

SHEET NUMBER
157
OF 160

Filename: ...\00\ROW\MSTA\007_RWPLAN7.dgn Username: mark.poulin Division: HIGHWAY Date:7/22/2010

TAX MAP U-25
LOT 28

TAX MAP U-25
LOT 30

N/F
HISTORIC MAINE PROPERTIES LLC

TAX MAP U-25
LOT 31

TAX MAP U-25
LOT 29

TAX MAP U-25
LOT 32

TAX MAP U-25
LOT 34

N/F
SHIRLEY WELLS

TAX MAP U-25
LOT 33

CURVE DATA #1
PI = 71+08.71
D = 28°38'52.4"
Δ = 7°24'49.2" Rt.
R = 200.00'
L = 25.88'
T = 12.96'
E = 0.42'

BETH S. CHAPLIN
PARCEL NO. (10)
LAND TAKEN = 1620± S.F. (PRESC. EASE.)
LAND TAKEN = 455± S.F. (OTHER)
TOTAL LAND TAKEN = 2075± S.F.
TEMP. CONST. RIGHTS = 885± S.F. (1)
TOTAL AREA = 9.9± AC. (SURVEY)
REM. AREA = 9.85± AC.

PT = STA. 71+21.63

PC = STA. 70+95.75

SEE PLAN OF LAND
FOR BETH CHAPLIN
BY SAWYER ENGINEERING & SURVEYING, INC.
2003
REVISION 12-05-03

N/F
ROGER A. CLEMENT, JR.

POE = STA. 37+77.10

52'±
CONSTRUCTION LIMITS
50.80'
885± S.F.
455± S.F. PORTION
7'±
91'±
45.00'
36.00'
29'±
33'±
177.9' UD TYPE B
177.5' UD TYPE B
N 61°33'52.3" W
205.38'
CONSTRUCTION LIMITS
215± S.F.

U.S. ROUTE 302
STATE HIGHWAY "14" BRIDGTON ROAD TO BRIDGTON
34+00 35+00 36+00 37+00 37+77
END B.L.
N 61°33'52.3" W

SHEETS 159 + 160 OF 160 OMITTED

N/F
HISTORIC MAINE PROPERTIES LLC

TAX MAP U-25
LOT 14

TAX MAP U-25
LOT 16

TAX MAP U-25
LOT 13

TAX MAP U-25
LOT 11

TAX MAP U-25
LOT 10

TAX MAP U-25
LOT 9

TAX MAP U-25
LOT 8

EXISTING DRAINAGE EASEMENT
SEE S.H.C. FILE NO. 3-98

SEE PLAN OF LAND
FOR MICHAEL & JANICE DONOGHUE
BY SAWYER ENGINEERING & SURVEYING, INC.
2001

SEE PLAN OF PROPERTY
FOR MAURICE GEMME
BY CULLENBERG LAND SURVEYING
1993
RECORDED CUMBERLAND COUNTY REGISTRY OF DEEDS
PLAN BOOK 196 PAGE 85

LOWEST WATER DRAWDOWN LEVEL -
ELEVATION 261.9' - NAVD88 (262.5' MSL)

R/W REFERENCES
U. S. ROUTE 302
CUMBERLAND COUNTY COMMISSIONERS RECORDS
VOL. 17 PAGE 473
1909
4 RODS (66 FEET)

ALSO SEE S.H.C. FILE NO. 3-98

GRID ZONE

NAPLES BAY BRIDGE
OVER
CHUTE RIVER
BRIDGE NO. 2047
PIN 11060.00

SYMBOLS
(WELL) WELL
GRADING LIMIT LINE
CONSTRUCTION LIMIT LINE
PROPERTY LINE P.L.
LIMITS OF R.O.W. RIGHT PORTION (LOW P.)
EXISTING RIGHT OF WAY
NEW RIGHT OF WAY
NEW ROW WITHIN EXIST. ROW
CONTROL OF ACCESS
IP or ● P/P (IRON PIPE or PIN FOUND)
ST. (SEPTIC TANK)
(ROW MONUMENT)
(TRAVERSE POINT)
WATER LINE
GAS LINE
ELECTRIC LINE
TELEPHONE LINE
SEWER LINE

ITEM	TECH	CHECKED
BASE MAP		
EXIST. R/W	D.W.B.	
PROP. LINES	D.W.B.	
AREAS	D.W.B.	P.N.S.

STATE OF MAINE
DEPARTMENT OF TRANSPORTATION
16 STATE HOUSE STATION - AUGUSTA, ME 04333-0016
NAPLES
RIGHT OF WAY MAP

REVISIONS

NO.	DATE	DESCRIPTION	BY

PLAN FILED IN PLAN BOOK		PAGE	COUNTY RECORD			
NO.	GRANTOR		INSTRUMENT	DATE	BOOK	PAGE
			COND.	7/19/10	27922	109

DAVID A. COLE
COMMISSIONER
KENNETH L. SWEENEY
CHIEF ENGINEER
DATE

STATE OF MAINE
PETER A. BELANGER
1341
PROFESSIONAL LAND SURVEYOR

STATE HIGHWAY "14"
U.S. ROUTE 302 (BRIDGTON ROAD)
NAPLES CUMBERLAND COUNTY
FEDERAL AID PROJECT NO. BH-A106(000)

APRIL 2010 | RIGHT-OF-WAY MAP | D.O.T. FILE NO. 3-565
SCALE 1" = 25' | SHEET 7 OF 7

SHEET NUMBER
158
OF 160