Updated 1/6/06

FEDERAL PROJECT

July 6, 2005
Supersedes August 4, 2004

BIDDING INSTRUCTIONS

FOR ALL PROJECTS:

1. Use pen and ink to complete all paper Bids.

2. As a minimum, the following must be received prior to the time of Bid opening:

   For a Paper Bid:
   a) a copy of the Notice to Contractors, b) the completed Acknowledgement of Bid Amendments form, c) the completed Schedule of Items, d) two copies of the completed and signed Contract Offer, Agreement & Award form, e) a Bid Guaranty, and f) any other certifications or Bid requirements listed in the Bid Documents as due by Bid opening.

   For an Electronic Bid:
   a) a completed Bid using Expedite® software and submitted via the Bid Express™ web-based service, b) a Bid Guaranty (as described below) or a faxed copy of a Bid Bond (with original to be delivered within 72 hours), and c) any other certifications or Bid requirements listed in the Bid Documents as due by Bid opening.

3. Include prices for all required items in the Schedule of Items. ("Zero is not considered a Bid price.")

4. Include a Bid Guaranty. Acceptable forms are:

   a. a properly completed and signed Bid Bond on the Department's prescribed form (or on a form that does not contain any significant variations from the Department's form as determined by the Department) for 5% of the Bid Amount or

   b. an Official Bank Check, Cashier's Check, Certified Check, U.S. Postal Money Order or Negotiable Certificate of Deposit in the amount stated in the Notice to Contractors.

5. If a paper Bid is to be sent, Federal Express overnight delivery is suggested as the package is delivered directly to the DOT Headquarters Building in Augusta. Other means, such as U.S. Postal Service's Express Mail has proven not to be reliable.

IN ADDITION, FOR FEDERAL AID PROJECTS:

6. Complete the DBE Proposed Utilization form in the proper amounts, and deliver to the Contracts section by 4:30 PM on bid opening day

If you need further information regarding Bid preparation, call the DOT Contracts Section at (207)624-3410.

For complete bidding requirements, refer to Section 102 of the Maine Department of Transportation, Standard Specifications, Revision of December 2002.

January 30, 2004
Supercedes February 11, 2003

NOTICE

The Maine Department of Transportation is attempting to improve the way Bid Amendments/Addendums are handled, and allow for an electronic downloading of bid packages from our website, while continuing to maintain a planholders list.

Prospective bidders, subcontractors or suppliers who wish to download a copy of the bid package and receive a courtesy notification of project specific bid amendments, must provide an email address to Diane Barnes or Mike Babb at the MDOT Contracts mailbox at: MDOT.contracts@maine.gov. Each bid package will require a separate request.

Additionally, interested parties will be responsible for reviewing and retrieving the Bid Amendments from our web site, and acknowledging receipt and incorporating those Bid Amendments in their bids using the Acknowledgement of Bid Amendment Form.

The downloading of bid packages from the MDOT website is not the same as providing an electronic bid to the Department. Electronic bids must be submitted via http://www.BIDX.com. For information on electronic bidding contract Larry Childs at Larry.Childs@maine.gov.

NOTICE

For security and other reasons, all Bid Packages which are mailed, shall be provided in double (one envelope inside the other) envelopes. The *Inner Envelope* shall have the following information provided on it:

Bid Enclosed - Do Not Open
PIN:
Town:
Date of Bid Opening:
Name of Contractor with mailing address and telephone number:

In Addition to the usual address information, the *Outer Envelope* should have written or typed on it:

Double Envelope: Bid Enclosed
PIN:
Town:
Date of Bid Opening:
Name of Contractor:
This should not be much of a change for those of you who use Federal Express or similar services.

Hand-carried Bids may be in one envelope as before, and should be marked with the following infrormation:

Bid Enclosed: Do Not Open
PIN:
Town:
Name of Contractor:

STATE OF MAINE DEPARTMENT OF TRANSPORTATION

Bid Guaranty-Bid Bond Form

KNOW ALL MEN BY THESE PRESENTS THAT_____

_____, of the City/Town of _____and State of_____

as Principal, and _____as Surety, a

Corporation duly organized under the laws of the State of_____and having a usual place of

Business in _____and hereby held and firmly bound unto the Treasurer of

the State of Maine in the sum of_____,for payment which Principal and Surety bind

themselves, their heirs, executers, administrators, successors and assigns, jointly and severally.

The condition of this obligation is that the Principal has submitted to the Maine Department of Transportation, hereafter Department, a certain bid, attached hereto and incorporated as a part herein, to enter into a written contract for the construction of _____

_____

_____and if the Department shall accept said bid and the Principal shall execute and deliver a contract in the form attached hereto (properly completed in accordance with said bid) and shall furnish bonds for this faithful performance of said contract, and for the payment of all persons performing labor or furnishing material in connection therewith, and shall in all other respects perform the agreement created by the acceptance of said bid, then this obligation shall be null and void; otherwise it shall remain in full force, and effect.

Signed and sealed this_____day of _____20_____

WITNESS:

_____

_____

_____

WITNESS

_____

_____

_____

PRINCIPAL:

By_____

By:_____

By:_____

SURETY:

By_____

By:_____

Name of Local Agency: _____

SAMPLE

NOTICE

Bidders:

Please use the attached “Request for Information” form when faxing questions and comments concerning specific Contracts that have been Advertised for Bid. Include additional numbered pages as required. Questions are to be faxed to the number listed in the Notice to Contractors. This is the only allowable mechanism for answering Project specific questions. Maine DOT will not be bound to any answers to Project specific questions received during the Bidding phase through other processes.

State of Maine
Department of Transportation

REQUEST FOR INFORMATION

Date _____ Time _____

Information Requested: **PIN:** _____ **Town(s):** _____

_____

_____

_____

_____

_____

_____

_____

_____

_____

_____

_____

_____

Request by: _____ **Phone: (_____)**_____
Bid Date: _____ **Fax: (_____)**_____

Complete top portion of form and transmit to the number listed in the Notice to Contractors

RFI No: _____ **RFI received:** _____

Response:_____

_____

_____

_____

_____

_____

_____

_____

_____

_____

_____

Response By:_____ Date: _____

NOTICE

Disadvantaged Business Enterprise Proposed Utilization

The Apparent Low Bidder must submit the Disadvantaged Business Enterprise Proposed Utilization form by close of Business (4:30 P.M.) on Bid day.

The Contractor's Disadvantaged Business Enterprise Proposed Utilization Plan form contains additional information that is required by USDOT.

The Contractor's Disadvantaged Business Enterprise Proposed Utilization Plan form must be used.

A copy of the new Contractor's Disadvantaged Business Enterprise Proposed Utilization Plan and instructions for completing it are attached.

Note: Questions about DBE firms, or to obtain a printed copy of the DBE Directory, contact the Civil Rights Office at (207) 624-3066.

MDOTs DBE Directory of Certified firms can also be obtained at www.maine.gov/mdot/disadvantaged-business-enterprises/dbe-home.php

INSTRUCTIONS FOR PREPARING THE CONTRACTOR'S DISADVANTAGED BUSINESS ENTERPRISE UTILIZATION PLAN

The Contractor Shall:

1. Submit a completed Contractor's Disadvantaged Business Enterprise Utilization Plan to the Contract's Engineer by 4:30 P.M. on the Bid day.

2. Extend equal opportunity to MDOT certified DBE firms (as listed in MDOT's DBE Directory of Certified Businesses) in the selection and utilization of Subcontractors and Suppliers.

SPECIFIC INSTRUCTIONS FOR COMPLETING THE FORM:

Insert Contractor name, the name of the person(s) preparing the form, and that person(s) telephone and fax number.

Provide total Bid price, Federal Project Identification Number, and location of the Project work.

In the columns, name each DBE firm to be used, provide the Unit or Item cost of the Work/Product to be provided by the DBE firm, give a brief description of the Work, and the dollar value of the Work.

If no DBE firm is to be utilized, the Contractor must document the reason(s) why no DBE firms are being used. Specific supporting evidence of good faith efforts taken by Contractors to solicit DBE Bidders must be attached. This evidence, as a minimum, includes phone logs, e-mail and/or mail DBE solicitation records, and the documented results of these solicitations.

NOTICE

Maine Department of Transportation
Disadvantaged Business Enterprise Program

Notice is hereby given that in accordance with US DOT regulation 49 CFR Part 26, the Maine Department of Transportation has established a DBE Program for disadvantaged business participation in the federal-aid construction program; MaineDOT contracts covered by the program include consulting, construction, supplies, manufacturing, and service contracts.

For FFY 2006 (October 1, 2005 through September 30, 2006), MaineDOT has established a DBE participation goal of 5% to be achieved through race/gender neutral means, with an additional 1.6% to be achieved through race/gender conscious contract goals.

Interested parties may view MaineDOT's DBE goal setting methodology for the next 30 days during normal business hours (8-4, M-F) at the Maine Department of Transportation, Office of Civil Rights, 16 State House Station, Augusta ME 04333-0016. Appointments may be scheduled by telephone at (207) 624-3066. The goal setting methodology is also available for viewing on the MaineDOT website: http://www.maine.gov/mdot/disadvantaged-business-enterprises/dbe-home.php.

Comments on the goal will be accepted for 45 days from the date of this notice. Written comments should be addressed to Holly Anderson, Maine Department of Transportation, Civil Rights Office, 16 State House Station, Augusta, Maine 04333-0016 or by e-mail at: holly.anderson@maine.gov.

____ **Original Submission** **Page ___ of ___**

____ **Revision # _____**

MaineDOT CONTRACTOR'S DISADVANTAGED BUSINESS ENTERPRISE PROPOSED UTILIZATION FORM

Low Bidder must furnish this form to Contracts Section Bid Opening day.

Contractor: _____ **Telephone: _____**

Prepared by:_____ **Fax: _____**

BID PRICE: $_____ **BID DATE: _____/_____/_____**

FEDERAL PIN # _____ **PROJECT LOCATION: _____**

TOTAL DBE _____ % PARTICIPATION FOR THIS PROJECT

WBE•	DBE•	Firm Name	Unit/Item Cost	Unit #	Description of Work & Item Number	Actual $ Value
					Total ›	

Attach supporting evidence to the maximum participation of DBEs on this project. This is a requirement. This evidence must include name of firm(s) contacted, date contacted, and outcome of solicitation.

Equal Opportunity Use:

Form received: ___/___/___ Verified by: _____

____ Accepted ____ Rejected _____

cc: ☐ Contracts ☐ Other _____

- **WBEs are non-minority women owned firms certified by MaineDOT**
- **DBEs are male and minority owned firms certified by MaineDOT**

For a complete list of certified firms go to http://www.state.me.us/mdot/disadvantaged-business-enterprises/dbe-home.php

Rev. 12/23/05

MaineDOT's

CIVIL RIGHTS OFFICE

To search for a specific work item, click on the binoculars, type in the word you want to search for and click on find. To go to the next selected item, click on the binoculars with the arrow.

MAINE DEPARTMENT OF TRANSPORTATION

CERTIFIED DISADVANTAGED AND WOMEN BUSINESS ENTERPRISE

DECEMBER 2005

Information is updated on an ongoing basis and can be retrieved by visiting our Website:
www.maine.gov/mdot/disadvantaged-business-enterprises/dbe-home.php

State of Maine

VENDOR FORM

For New Vendors & for Updates on Current Vendors

Special Instructions:

PLEASE PRINT CLEARLY

Return this form to:

*** = MUST BE COMPLETED TO PROCESS**

ONLY ONE NAME/VENDOR PER FORM

New Vendor	Address Change	Multi Address	Name Change	Contact Update	ID # Change

Social Security Number*
Individual or Sole Proprietor

S

Business name in "DBA" field below.

OR

Please fill in ONE.

Federal Taxpayer ID Number*
Corporation

E

Business name in "Name" field below.

This form will affect all transactions with ALL state agencies.

NEW:*	**OLD:**
Remit to Address: Individual or Business Name.	Old number:
Name*	Name
DBA or C/O	DBA or C/O
Address*	Address
Tel #*	Tel #

	Is this the same name on your Social Security card?	Acct #	
	If not, have you told Social Security about your name change?	Provider #	

Signature*

Contact Name

Print Name or Title

Accounts Receivable Contact Name

Date* (within 3 months)

Phone # if Different or for Contact Info

Vendor Indicators: Enter Y (Yes) For All Categories Listed Below That Apply To This Vendor

Dealer:		Manufacturer:		Factory Rep:	
Jobber:		Retailer:		Commodity:	
Individual:		Partnership:		Incorporated:	
Minority:		Small Business:		In-State:	

Information on State Agency Submitting Vendor Form

State Agency* & SHS #

Contact Person Name & Title*

Telephone #*

Send to: Maine Department of Transportation/ Contracts 16 SHS, Augusta, ME 04333-0014 Attn: Pat Brown

May-04

INSTRUCTIONS FOR COMPLETING VENDOR FORM

1. **Print Clearly**
2. **All sections marked with an * must be completed for processing**
3. **Send completed form to requesting State agency OR remit to address at bottom of form.**
4. **Do NOT send by Fax. Only originals will be accepted.**

FIELDS	**INFORMATION NEEDED FOR FIELD**
Special Instructions	*Instructions to Vendor from Agency requesting information.*
Return to	*The location of agency where the form is to be mailed back to. If none use address at bottom of form.*
Boxes above SSN/EIN Fields	Please check mark all that apply to the vendor. If other, please specify. If it's a new vendor only one will apply: "New Vendor"
Social Security Number	Individuals, individuals "doing business as", and individuals without a Federal Taxpayer ID #. Use if not using EIN
Federal Taxpayer ID Number*	Businesses or professionals providing services. (ID # needs to be use for REMITTANCE purposes.) Use if not using SSN
New	Current Information
Old	Old information (If another ID# had been used please put it next to "OLD")
Name	Individual's Name or Business Name. ONLY ONE name per a form.
DBA or C/O	"Doing business as" or "In Care Of"
Address	REMITTANCE ADDRESS - Street Address OR PO Box (one or the other)
Tel #	Phone Number of individual or business
Signature	Individual or authorized representative of individual or authorized representative of the business
Date	Current Date (no more than 3 months old)
Contact Name	Contact person at business
Accounts Receivable Contact Name	Contact person at business for accounts receivables.
Phone #	Phone for Act Rec Contact
Vendor Indicators	Indicate all that apply for the vendor, as needed
Agency Info	For Agency personnel submitting the form. Contact info incase of questions.

STATE OF MAINE DEPARTMENT OF TRANSPORTATION
NOTICE TO CONTRACTORS

Sealed Bids addressed to the Maine Department of Transportation, Augusta, Maine 04333 and endorsed on the wrapper "Bid for **REST AREA IMPROVEMENTS** in various towns **STATEWIDE**" will be received from contractors at the Reception Desk, Maine DOT Building, Child Street, Augusta, Maine, until 11:00 o'clock A.M. (prevailing time) on January 24, 2007, and at that time and place publicly opened and read. Bids will be accepted from contractors prequalified by the Department of Transportation for **BUILDING(S)** projects. All other Bids may be rejected. MDOT provides the option of electronic bidding. We accept electronic bids for those bid packages posted on the bidx.com website. Electronic bids do not have to be accompanied by paper bids. Please note: the Department will accept a facsimile of the bid bond; however, the original bid bond must then be received at the MDOT Contract Section within 72 hours of the bid opening. During this transition, dual bids (one paper, one electronic) will be accepted, with the paper copy taking precedence.

Description: Maine Federal Aid Projects Nos.	STP-12829(000)X	PIN 12829.00
	SB-ME-99(002)	PIN 8962.00
	SB-ME-1(005)	PIN 8857.14

Location: At various locations STATEWIDE in Cumberland, York, Oxford, Franklin, Hancock, Somerset, Penobscot, Washington, and Aroostook Counties. Project has **13** (thirteen) locations as outlined in the contract documents.

Outline of Work: Construct wooden framed restroom buildings, furnish and install 1000 gallon polyethylene holding tanks, install poured concrete flooring and sills, and furnish and install ADA compliant fixtures, along with cedar shake siding, roofing, and all incidental finishes, site work and other incidental work.

For general information regarding Bidding and Contracting procedures, contact Scott Bickford at (207)624-3410. Our webpage at http://www.state.me.us/mdot/project/design/homepg.htm contains a copy of the schedule of items, Plan Holders List, written portions of bid amendments (not drawings), and bid results. For Project-specific information fax all questions to Larry Johannesman, Project Manager at (207)624-3431. Questions received after 12:00 noon of Monday prior to bid date will not be answered. Bidders shall not contact any other Departmental staff for clarification of Contract provisions, and the Department will not be responsible for any interpretations so obtained. Hearing impaired persons may call the Telecommunication Device for the Deaf at (207) 624-3007.

Plans, specifications and bid forms may be seen at the Maine DOT Building in Augusta, Maine. They may be purchased from the Department between the hours of 8:00 a.m. to 4:30 p.m. by cash, credit card (Visa/Mastercard) or check payable to Treasurer, State of Maine sent to Maine Department of Transportation, Attn.: Mailroom, 16 State House Station, Augusta, Maine 04333-0016. They also may be purchased by telephone at (207)624-3536 between the hours of 8:00 a.m. to 4:30 p.m. Bid Book $10 ($13 by mail), payment in advance, all non-refundable.

Each Bid must be made upon blank forms provided by the Department and must be accompanied by a bid bond at 5% of the bid amount or an official bank check, cashier's check, certified check, certificate of deposit, or United States postal money order in the amount of $12,000 payable to Treasurer, State of Maine as a Bid guarantee. A Contract Performance Surety Bond and a Contract Payment Surety Bond, each in the amount of 100 percent of the Contract price, will be required of the successful Bidder.

This Contract is subject to all applicable Federal Laws. This contract is subject to compliance with the Disadvantaged Business Enterprise program requirements as set forth by the Maine Department of Transportation.

All work shall be governed by "State of Maine, Department of Transportation, Standard Specifications, Revision of December 2002", price $10 [$13 by mail], and Standard Details, Revision of December 2002, price $20 [$25 by mail]. Standard Detail updates can be found at http://www.state.me.us/mdot/project/design/homepg.htm

The right is hereby reserved to the MDOT to reject any or all bids.

Augusta, Maine
January 3, 2007

STATE OF MAINE
JOHN E. DORITY
No. 2093
LICENSED
PROFESSIONAL ENGINEER

JOHN E. DORITY
CHIEF ENGINEER

SPECIAL PROVISION 102.7.3
ACKNOWLEDGMENT OF BID AMENDMENTS

With this form, the Bidder acknowledges its responsibility to check for all Amendments to the Bid Package. For each Project under Advertisement, Amendments are located at http://www.maine.gov/mdot/comprehensive-list-projects/project-information.php It is the responsibility of the Bidder to determine if there are Amendments to the Project, to download them, to incorporate them into their Bid Package, and to reference the Amendment number and the date on the form below. The Maine DOT will not post Bid Amendments any later than noon the day before Bid opening without individually notifying all the planholders.

Amendment Number	Date

The Contractor, for itself, its successors and assigns, hereby acknowledges that it has received all of the above referenced Amendments to the Bid Package.

CONTRACTOR

_____
Date

_____
Signature of authorized representative

_____
(Name and Title Printed)

CONTRACT ID: 012829.00 PROJECT(S): SB-ME-1(005)
SB-ME-99(002)
STP-1282(900)X

CONTRACTOR :_____

LINE NO	ITEM DESCRIPTION	APPROX. QUANTITY AND UNITS	UNIT PRICE DOLLARS	UNIT PRICE CTS	BID AMOUNT DOLLARS	BID AMOUNT CTS
	SECTION 0001 SCENIC ENHANCEMENTS					
0010	203.24 COMMON BORROW	70.000 CY				
0020	411.131 STONE DUST SURFACE COURSE	540.000 SF				
0030	615.07 LOAM	30.000 CY				
0040	619.1301 BARK MULCH	20.000 CY				
0050	619.1401 EROSION CONTROL MIX	15.000 CY				
0060	629.05 HAND LABOR, STRAIGHT TIME	44.000 HR				
0070	631.12 ALL PURPOSE EXCAVATOR (INCLUDING OPERATOR)	40.000 HR				
0080	659.10 MOBILIZATION	LUMP	LUMP			
0090	815.50 PRIVY BUILDING SITE LOC. 1 - LIMINGTON RAPIDS	LUMP	LUMP			

CONTRACT ID: 012829.00 PROJECT(S): SB-ME-1(005)
SB-ME-99(002)
STP-1282(900)X

CONTRACTOR :_____

LINE NO	ITEM DESCRIPTION	APPROX. QUANTITY AND UNITS	UNIT PRICE DOLLARS	UNIT PRICE CTS	BID AMOUNT DOLLARS	BID AMOUNT CTS
0100	815.50 PRIVY BUILDING SITE LOC. 10 - OXBOW	LUMP	LUMP			
0110	815.50 PRIVY BUILDING SITE LOC. 11 - HEDGEHOG MTN.	LUMP	LUMP			
0120	815.50 PRIVY BUILDING SITE LOC. 12 - SOLDIER POND	LUMP	LUMP			
0130	815.50 PRIVY BUILDING SITE LOC. 13 - MOPANG	LUMP	LUMP			
0140	815.50 PRIVY BUILDING SITE LOC. 2 - STICKY RIVER	LUMP	LUMP			
0150	815.50 PRIVY BUILDING SITE LOC. 3 - SNOW FALLS	LUMP	LUMP			
0160	815.50 PRIVY BUILDING SITE LOC. 4 - SMALLS FALLS	LUMP	LUMP			
0170	815.50 PRIVY BUILDING SITE LOC. 5 - ATTEAN OVERLOOK	LUMP	LUMP			
0180	815.50 PRIVY BUILDING SITE LOC. 6 - TAUNTON BAY	LUMP	LUMP			
0190	815.50 PRIVY BUILDING SITE LOC. 7 - TUNK LAKE	LUMP	LUMP			

CONTRACT ID: 012829.00 PROJECT(S): SB-ME-1(005)
SB-ME-99(002)
STP-1282(900)X

CONTRACTOR :_____

LINE NO	ITEM DESCRIPTION	APPROX. QUANTITY AND UNITS	UNIT PRICE DOLLARS	UNIT PRICE CTS	BID AMOUNT DOLLARS	BID AMOUNT CTS
0200	815.50 PRIVY BUILDING SITE LOC. 8 - GRINDSTONE	LUMP	LUMP			
0210	815.50 PRIVY BUILDING SITE LOC. 9 - COLD SPRING	LUMP	LUMP			
	SECTION 0001 TOTAL					
	TOTAL BID					

CONTRACT AGREEMENT, OFFER & AWARD

AGREEMENT made on the date last signed below, by and between the State of Maine, acting through and by its Department of Transportation (Department), an agency of state government with its principal administrative offices located at Child Street, Augusta, Maine, with a mailing address at 16 State House Station, Augusta, Maine 04333-0016, and _____ a corporation or other legal entity organized under the laws of the State of _____, with its principal place of business located at _____ _____

The Department and the Contractor, in consideration of the mutual promises set forth in this Agreement (the "Contract"), hereby agree as follows:

A. The Work.

The Contractor agrees to complete all Work as specified or indicated in the Contract including Extra Work in conformity with the Contract, **PIN Nos. 12829.00, 8962.00, 8857.14** for **Rest Area Improvements** in the towns/counties **Statewide**. The Work includes construction, maintenance during construction, maintenance during construction, warranty as provided in the Contract and other incidental work.

The Contractor shall be responsible for furnishing all supervision, labor, equipment, tools supplies, permanent materials and temporary materials required to perform the Work including construction quality control including inspection, testing and documentation, all required documentation at the conclusion of the project, warranting its work and performing all other work indicated in the Contract.

The Department shall have the right to alter the nature and extent of the Work as provided in the Contract; payment to be made as provided in the same.

B. Time.

The Contractor agrees to complete all Work, except warranty work, on or before **June 30, 2007.** Further, the Department may deduct from moneys otherwise due the Contractor, not as a penalty, but as Liquidated Damages in accordance with Sections 107.7 and 107.8 of the State of Maine Department of Transportation Standard Specifications, Revision of December 2002.

C. Price.

The quantities given in the Schedule of Items of the Bid Package will be used as the basis for determining the original Contract amount and for determining the amounts of the required Performance Surety Bond and Payment Surety Bond, and that the amount of this offer is _____

_____

$_ _____ Performance Bond and Payment Bond each being 100% of the amount of this Contract.

D. Contract.

This Contract, which may be amended, modified, or supplemented in writing only, consists of the Contract documents as defined in the Plans, Standard Specifications, Revision of December 2002, Standard Details Revision of December 2002 as updated through advertisement, Supplemental Specifications, Special Provisions, Contract Agreement; and Contract Bonds. It is agreed and understood that this Contract will be governed by the documents listed above.

E. Certifications.

By signing below, the Contractor hereby certifies that to the best of the Contractor's knowledge and belief:

1. All of the statements, representations, covenants, and/or certifications required or set forth in the Bid and the Bid Documents, including those in Appendix A to Division 100 of the Standard Specifications Revision of December 2002 (Federal Contract Provisions Supplement), and the Contract are still complete and accurate as of the date of this Agreement.

2. The Contractor knows of no legal, contractual, or financial impediment to entering into this Contract.

3. The person signing below is legally authorized by the Contractor to sign this Contract on behalf of the Contractor and to legally bind the Contractor to the terms of the Contract.

F. Offer.

The undersigned, having carefully examined the site of work, the Plans, Standard Specifications Revision of December 2002, Standard Details Revision of December 2002 as updated through advertisement, Supplemental Specifications, Special Provisions, Contract Agreement; and Contract Bonds contained herein for construction of: **Rest Area Improvements** in the towns of: **Statewide PIN Nos. 12829.00, 8962.00, 8857.14** State of Maine, on which bids will be received until the time specified in the "Notice to Contractors" do(es) hereby bid and offer to enter into this contract to supply all the materials, tools, equipment and labor to construct the whole of the Work in strict accordance with the terms and conditions of this Contract at the unit prices in the attached "Schedule of Items".

The Offeror agrees to perform the work required at the price specified above and in accordance with the bids provided in the attached "Schedule of Items" in strict accordance with the terms of this solicitation, and to provide the appropriate insurance and bonds if this offer is accepted by the Government in writing.

As Offeror also agrees:

First: To do any extra work, not covered by the attached "Schedule of Items", which may be ordered by the Resident, and to accept as full compensation the amount determined upon a "Force Account" basis as provided in the Standard Specifications, Revision of December 2002, and as addressed in the contract documents.

Second: That the bid bond at 5% of the bid amount or the official bank check, cashier's check, certificate of deposit or U. S. Postal Money Order in the amount given in the "Notice to Contractors", payable to the Treasurer of the State of Maine and accompanying this bid, shall be forfeited, as liquidated damages, if in case this bid is accepted, and the undersigned shall fail to abide by the terms and conditions of the offer and fail to furnish satisfactory insurance and Contract bonds under the conditions stipulated in the Specifications within 15 days of notice of intent to award the contract.

Third: To begin the Work on the date specified in the Engineer's "Notice to Commence Work" as stated in Section 107.2 of the Standard Specifications Revision of December 2002 and complete the Work within the time limits given in the Special Provisions of this Contract.

Fourth: The Contractor will be bound to the Disadvantaged Business Enterprise (DBE) Requirements contained in the attached Notice (Additional Instructions to Bidders) and submit a completed Contractor's Disadvantaged Business Enterprise Utilization Plan by 4:30pm on the day of bid opening to the Contracts Engineer.

Fifth: That this offer shall remain open for 30 calendar days after the date of opening of bids.

Sixth: The Bidder hereby certifies, to the best of its knowledge and belief that: the Bidder has not, either directly or indirectly, entered into any agreement, participated in any collusion, or otherwise taken any action in restraint of competitive bidding in connection with its bid, and its subsequent contract with the Department.

IN WITNESS WHEREOF, the Contractor, for itself, its successors and assigns, hereby execute two duplicate originals of this Agreement and thereby binds itself to all covenants, terms, and obligations contained in the Contract Documents.

CONTRACTOR

_____	_____
Date	(Signature of Legally Authorized Representative of the Contractor)
_____	_____
Witness	(Name and Title Printed)

G. Award.

Your offer is hereby accepted. This award consummates the Contract, and the documents referenced herein.

MAINE DEPARTMENT OF TRANSPORTATION

_____	_____
Date	By: David A. Cole, Commissioner
_____	
Witness	

CONTRACT AGREEMENT, OFFER & AWARD

AGREEMENT made on the date last signed below, by and between the State of Maine, acting through and by its Department of Transportation (Department), an agency of state government with its principal administrative offices located at Child Street, Augusta, Maine, with a mailing address at 16 State House Station, Augusta, Maine 04333-0016, and _____ a corporation or other legal entity organized under the laws of the State of _____, with its principal place of business located at _____ _____

The Department and the Contractor, in consideration of the mutual promises set forth in this Agreement (the "Contract"), hereby agree as follows:

A. The Work.

The Contractor agrees to complete all Work as specified or indicated in the Contract including Extra Work in conformity with the Contract, **PIN Nos. 12829.00, 8962.00, 8857.14** for **Rest Area Improvements** in the towns/counties **Statewide**. The Work includes construction, maintenance during construction, maintenance during construction, warranty as provided in the Contract and other incidental work.

The Contractor shall be responsible for furnishing all supervision, labor, equipment, tools supplies, permanent materials and temporary materials required to perform the Work including construction quality control including inspection, testing and documentation, all required documentation at the conclusion of the project, warranting its work and performing all other work indicated in the Contract.

The Department shall have the right to alter the nature and extent of the Work as provided in the Contract; payment to be made as provided in the same.

B. Time.

The Contractor agrees to complete all Work, except warranty work, on or before **June 30, 2007.** Further, the Department may deduct from moneys otherwise due the Contractor, not as a penalty, but as Liquidated Damages in accordance with Sections 107.7 and 107.8 of the State of Maine Department of Transportation Standard Specifications, Revision of December 2002.

C. Price.

The quantities given in the Schedule of Items of the Bid Package will be used as the basis for determining the original Contract amount and for determining the amounts of the required Performance Surety Bond and Payment Surety Bond, and that the amount of this offer is _____

_____

$_ _____ Performance Bond and Payment Bond each being 100% of the amount of this Contract.

D. Contract.

This Contract, which may be amended, modified, or supplemented in writing only, consists of the Contract documents as defined in the Plans, Standard Specifications, Revision of December 2002, Standard Details Revision of December 2002 as updated through advertisement, Supplemental Specifications, Special Provisions, Contract Agreement; and Contract Bonds. It is agreed and understood that this Contract will be governed by the documents listed above.

E. Certifications.

By signing below, the Contractor hereby certifies that to the best of the Contractor's knowledge and belief:

1. All of the statements, representations, covenants, and/or certifications required or set forth in the Bid and the Bid Documents, including those in Appendix A to Division 100 of the Standard Specifications Revision of December 2002 (Federal Contract Provisions Supplement), and the Contract are still complete and accurate as of the date of this Agreement.

2. The Contractor knows of no legal, contractual, or financial impediment to entering into this Contract.

3. The person signing below is legally authorized by the Contractor to sign this Contract on behalf of the Contractor and to legally bind the Contractor to the terms of the Contract.

F. Offer.

The undersigned, having carefully examined the site of work, the Plans, Standard Specifications Revision of December 2002, Standard Details Revision of December 2002 as updated through advertisement, Supplemental Specifications, Special Provisions, Contract Agreement; and Contract Bonds contained herein for construction of: **Rest Area Improvements** in the towns of: **Statewide PIN Nos. 12829.00, 8962.00, 8857.14** State of Maine, on which bids will be received until the time specified in the "Notice to Contractors" do(es) hereby bid and offer to enter into this contract to supply all the materials, tools, equipment and labor to construct the whole of the Work in strict accordance with the terms and conditions of this Contract at the unit prices in the attached "Schedule of Items".

The Offeror agrees to perform the work required at the price specified above and in accordance with the bids provided in the attached "Schedule of Items" in strict accordance with the terms of this solicitation, and to provide the appropriate insurance and bonds if this offer is accepted by the Government in writing.

As Offeror also agrees:

First: To do any extra work, not covered by the attached "Schedule of Items", which may be ordered by the Resident, and to accept as full compensation the amount determined upon a "Force Account" basis as provided in the Standard Specifications, Revision of December 2002, and as addressed in the contract documents.

Second: That the bid bond at 5% of the bid amount or the official bank check, cashier's check, certificate of deposit or U. S. Postal Money Order in the amount given in the "Notice to Contractors", payable to the Treasurer of the State of Maine and accompanying this bid, shall be forfeited, as liquidated damages, if in case this bid is accepted, and the undersigned shall fail to abide by the terms and conditions of the offer and fail to furnish satisfactory insurance and Contract bonds under the conditions stipulated in the Specifications within 15 days of notice of intent to award the contract.

Third: To begin the Work on the date specified in the Engineer's "Notice to Commence Work" as stated in Section 107.2 of the Standard Specifications Revision of December 2002 and complete the Work within the time limits given in the Special Provisions of this Contract.

Fourth: The Contractor will be bound to the Disadvantaged Business Enterprise (DBE) Requirements contained in the attached Notice (Additional Instructions to Bidders) and submit a completed Contractor's Disadvantaged Business Enterprise Utilization Plan by 4:30pm on the day of bid opening to the Contracts Engineer.

Fifth: That this offer shall remain open for 30 calendar days after the date of opening of bids.

Sixth: The Bidder hereby certifies, to the best of its knowledge and belief that: the Bidder has not, either directly or indirectly, entered into any agreement, participated in any collusion, or otherwise taken any action in restraint of competitive bidding in connection with its bid, and its subsequent contract with the Department.

IN WITNESS WHEREOF, the Contractor, for itself, its successors and assigns, hereby execute two duplicate originals of this Agreement and thereby binds itself to all covenants, terms, and obligations contained in the Contract Documents.

CONTRACTOR

_____	_____
Date	(Signature of Legally Authorized Representative of the Contractor)
_____	_____
Witness	(Name and Title Printed)

G. Award.

Your offer is hereby accepted. This award consummates the Contract, and the documents referenced herein.

MAINE DEPARTMENT OF TRANSPORTATION

_____	_____
Date	By: David A. Cole, Commissioner
_____	
Witness	

CONTRACT AGREEMENT, OFFER & AWARD

AGREEMENT made on the date last signed below, by and between the State of Maine, acting through and by its Department of Transportation (Department), an agency of state government with its principal administrative offices located at Child Street Augusta, Maine, with a mailing address at 16 State House Station, Augusta, Maine 04333-0016, and **(Name of the firm bidding the job)** a corporation or other legal entity organized under the laws of the State of Maine, with its principal place of business located at **(address of the firm bidding the job)**

The Department and the Contractor, in consideration of the mutual promises set forth in this Agreement (the "Contract"), hereby agree as follows:

SAMPLE

A. The Work.

The Contractor agrees to complete all Work as specified or indicated in the Contract including Extra Work in conformity with the Contract, PIN No. **1224.00**, for the **Hot Mix Asphalt Overlay** in the town/city of **West Eastport**, County of **Washington**, Maine. The Work includes construction, maintenance during construction, warranty as provided in the Contract, and other incidental work.

The Contractor shall be responsible for furnishing all supervision, labor, equipment, tools supplies, permanent materials and temporary materials required to perform the Work including construction quality control including inspection, testing and documentation, all required documentation at the conclusion of the project, warranting its work and performing all other work indicated in the Contract.

The Department shall have the right to alter the nature and extent of the Work as provided in the Contract; payment to be made as provided in the same.

B. Time.

The Contractor agrees to complete all Work, except warranty work, on or before **November 15**, 2003**.** Further, the Department may deduct from moneys otherwise due the Contractor, not as a penalty, but as Liquidated Damages in accordance with Sections 107.7 and 107.8 of the State of Maine Department of Transportation Standard Specifications, Revision of December 2002.

C. Price.

The quantities given in the Schedule of Items of the Bid Package will be used as the basis for determining the original Contract amount and for determining the amounts of the required Performance Surety Bond and Payment Surety Bond, and that the amount of this offer is **____(Place bid here in alphabetical form such as One Hundred and Two dollars and 10 cents)** **$_ (repeat bid here in numerical terms, such as $102.10)**_____ Performance Bond and Payment Bond each being 100% of the amount of this Contract.

D. Contract.

This Contract, which may be amended, modified, or supplemented in writing only, consists of the Contract documents as defined in the Plans, Standard Specifications, Revision of December 2002, Standard Details Revision of December 2002, Supplemental Specifications, Special Provisions, Contract Agreement; and Contract Bonds. It is agreed and understood that this Contract will be governed by the documents listed above.

E. Certifications.

By signing below, the Contractor hereby certifies that to the best of the Contractor's knowledge and belief:

1. All of the statements, representations, covenants, and/or certifications required or set forth in the Bid and the Bid Documents, including those in Appendix A to Division 100 of the Standard Specifications Revision of December 2002 (Federal Contract Provisions Supplement), and the Contract are still complete and accurate as of the date of this Agreement.

2. The Contractor knows of no legal, contractual, or financial impediment to entering into this Contract.

3. The person signing below is legally authorized by the Contractor to sign this Contract on behalf of the Contractor and to legally bind the Contractor to the terms of the Contract.

F. Offer.

SAMPLE

The undersigned, having carefully examined the site of work, the Plans, Standard Specifications, Revision of December 2002, Standard Details Revision of December 2002, Supplemental Specifications, Special Provisions, Contract Agreement; and Contract Bonds contained herein for construction of:

PIN 1234.00 West Eastport, Hot Mix Asphalt Overlay,

State of Maine, on which bids will be received until the time specified in the "Notice to Contractors" do(es) hereby bid and offer to enter into this contract to supply all the materials, tools, equipment and labor to construct the whole of the Work in strict accordance with the terms and conditions of this Contract at the unit prices in the attached "Schedule of Items".

The Offeror agrees to perform the work required at the price specified above and in accordance with the bids provided in the attached "Schedule of Items" in strict accordance with the terms of this solicitation, and to provide the appropriate insurance and bonds if this offer is accepted by the Government in writing.

As Offeror also agrees:

First: To do any extra work, not covered by the attached "Schedule of Items", which may be ordered by the Resident, and to accept as full compensation the amount determined upon a "Force Account" basis as provided in the Standard Specifications, Revision of December 2002, and as addressed in the contract documents.

Second: That the bid bond at 5% of the bid amount or the official bank check, cashier's check, certificate of deposit or U. S. Postal Money Order in the amount given in the "Notice to Contractors", payable to the Treasurer of the State of Maine and accompanying this bid, shall be forfeited, as liquidated damages, if in case this bid is accepted, and the undersigned shall fail to abide by the terms and conditions of the offer and fail to furnish satisfactory insurance and Contract bonds under the conditions stipulated in the Specifications within 15 days of notice of intent to award the contract.

Third: To begin the Work on the date specified in the Engineer's "Notice to Commence Work" as stated in Section 107.2 of the Standard Specifications Revision of 2002 and complete the Work within the time limits given in the Special Provisions of this Contract.

Fourth: The Contractor will be bound to the Disadvantaged Business Enterprise (DBE) Requirements contained in the attached Notice (Additional Instructions to Bidders) and submit a completed Contractor's Disadvantaged Business Enterprise Utilization Plan by 4:30pm on the day of bid opening to the Contracts Engineer.

Fifth: That this offer shall remain open for 30 calendar days after the date of opening of bids.

SAMPLE

Sixth: The Bidder hereby certifies, to the best of its knowledge and belief that: the Bidder has not, either directly or indirectly, entered into any agreement, participated in any collusion, or otherwise taken any action in restraint of competitive bidding in connection with its bid, and its subsequent contract with the Department.

IN WITNESS WHEREOF, the Contractor, for itself, its successors and assigns, hereby execute two duplicate originals of this Agreement and thereby binds itself to all covenants, terms, and obligations contained in the Contract Documents.

CONTRACTOR

_____	**(Sign Here)**_____
Date	(Signature of Legally Authorized Representative of the Contractor)
____**(Witness Sign Here)**_____	**(Print Name Here)**_____
Witness	(Name and Title Printed)

SAMPLE

G. Award.

Your offer is hereby accepted. This award consummates the Contract, and the documents referenced herein.

MAINE DEPARTMENT OF TRANSPORTATION

_____	_____
Date	By: David A. Cole, Commissioner

_____

(Witness)

BOND # _____

CONTRACT PERFORMANCE BOND
(Surety Company Form)

KNOW ALL MEN BY THESE PRESENTS: That _____ _____ **and the State of** _____, as principal, and……....., a corporation duly organized under the laws of the State of ..... and having a usual place of business ...., as Surety, are held and firmly bound unto the Treasurer of the State of Maine in the sum of _____ **and 00/100 Dollars ($)**, to be paid said Treasurer of the State of Maine or his successors in office, for which payment well and truly to be made, Principal and Surety bind themselves, their heirs, executors and administrators, successors and assigns, jointly and severally by these presents.

The condition of this obligation is such that if the Principal designated as Contractor in the Contract to construct Project Number _____ in the Municipality of _____ promptly and faithfully performs the Contract, then this obligation shall be null and void; otherwise it shall remain in full force and effect.

The Surety hereby waives notice of any alteration or extension of time made by the State of Maine.

Signed and sealed this ..... day of ....., 20….. .

WITNESSES:	SIGNATURES:
	CONTRACTOR:
Signature.....	.....….....
Print Name Legibly	Print Name Legibly ...….....
	SURETY:
Signature	....….....
Print Name Legibly	Print Name Legibly .....
SURETY ADDRESS:	NAME OF LOCAL AGENCY:
.....	ADDRESS .....
.....	...…….....
.....	.....…….....
TELEPHONE.....	.....…….....

SAMPLE

BOND # _____

CONTRACT PAYMENT BOND
(Surety Company Form)

KNOW ALL MEN BY THESE PRESENTS: That _____ _____ **and the State of** _____, as principal, and.....….....
a corporation duly organized under the laws of the State of ..... and having a usual place of business in .....……., as Surety, are held and firmly bound unto the Treasurer of the State of Maine for the use and benefit of claimants as herein below defined, in the sum of _____ **and 00/100 Dollars ($)** for the payment whereof Principal and Surety bind themselves, their heirs, executors and administrators, successors and assigns, jointly and severally by these presents.

The condition of this obligation is such that if the Principal designated as Contractor in the Contract to construct Project Number _____ in the Municipality of _____ promptly satisfies all claims and demands incurred for all labor and material, used or required by him in connection with the work contemplated by said Contract, and fully reimburses the obligee for all outlay and expense which the obligee may incur in making good any default of said Principal, then this obligation shall be null and void; otherwise it shall remain in full force and effect.

A claimant is defined as one having a direct contract with the Principal or with a Subcontractor of the Principal for labor, material or both, used or reasonably required for use in the performance of the contract.

Signed and sealed this ..... day of ...……....., 20 ... .

WITNESS:	SIGNATURES:
	CONTRACTOR:
Signature…….....	.....….....
Print Name Legibly .....……..	Print Name Legibly ….....
	SURETY:
Signature.....	...….....
Print Name Legibly	Print Name Legibly ….....
SURETY ADDRESS:	NAME OF LOCAL AGENCY:
...….....	ADDRESS ….....
.....	…….....
TELEPHONE	…….....

SAMPLE

Individual Privy Site Notes

1 Limington Rapids Rest Area (Replacement) **MaineDOT** Region 1

York County
State Route 25, Standish, Maine
(At the junction of Route 25 and the Saco River. On the west side of the river.)
Davis – Bacon ME8

#1 Site/Construction Notes:

1. Remove and stockpile on site (25) 3'long granite curb pieces for MaineDOT to take away.
2. No additional fill needed. Spread excess soil in circular island area to fill depressions **or** remove excavated soil from the site.
3. Finished floor elevation 2-3" above existing grade of rest area drive.
4. Provide stone dust (1.5 cu. yds.) path/apron to connect privy to the existing rest area drive.
5. Stabilize exposed soils and spread bark mulch (3 cu. yds.) around sides and back of privy to tie into existing trees.

#2 Sticky River Rest Area (Replacement) **MaineDOT** Region 1

Cumberland County
State Route 114, Standish, Maine
(On west side, approximately one mile north of Route 114 and Route 35 Junction.
Davis – Bacon ME6

#2 Site/Construction Notes:

1. Remove and stockpile on site (12) 3'long granite curb pieces for MaineDOT to take away.
2. No additional fill needed. Remove excavated soil from the site.
3. Finished floor elevation 3" above existing grade of rest area drive.
4. Provide stone dust (1.5 cu. yds.) path/apron to connect privy to the existing rest area drive.
5. Stabilize exposed soils and spread bark mulch (1.5 cu. yds.) around sides and back of privy to tie into existing trees.

#3 Snow Falls Rest Area (Replacement) **MaineDOT** Region 3

Oxford County
State Route 26, West Paris, Maine
(West side of Route 26 approximately 2.5 miles south of Route 26/Route 219 junction.)
Davis – Bacon ME8

#3 Site/Construction Notes:

1. Finish Floor elevation to be 6-8" higher than existing grade. Use excavated soil to backfill and blend elevated privy into surrounding picnic area.
2. A small amount of additional common borrow may be needed pending excavation.
3. Remove any excess soil from the site.
4. Boulders along sidewalk in pictures have been removed to provide access.
5. Test borings were done but underground ledge and boulders may require the final privy location to shift a few feet in any direction.
6. Provide 4'wide stone dust (2 cu. yds.) path with flared end to connect privy to existing sidewalk.
7. Stabilize exposed soils behind privy with bark mulch (2 cu. yds.) and blend into existing trees.
8. Stabilize disturbed lawn areas and exposed soils on sides and front of privy with MaineDOT #2 seed and hay mulch.

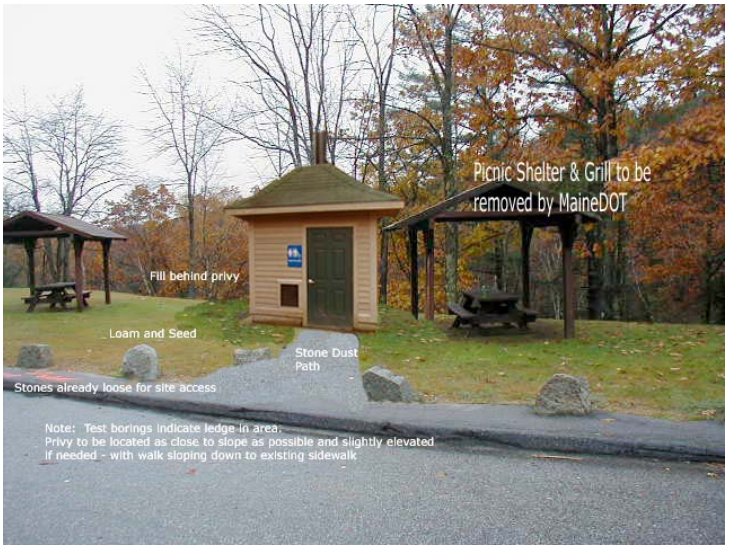

Install two toilet paper dispensers @ Snow Falls

#4 Smalls Falls Rest Area (Replacement) **MaineDOT** Region 3

Franklin County
State Route 4, TWP E, Maine
(Between Rangeley and Phillips-approximately 9 miles north of Route 42/ Route 4 Junction in Phillips.
Davis – Bacon ME8

#4 Site/Construction Notes:

1. No additional fill needed.
2. Finish floor elevation and 6' x 6' landing (minimum) at door shall be set for maximum 5% slope to existing driveway grade.
3. Excess soil can be spread and blended to meet existing grades in low areas behind the privies and stabilized with a layer of bark mulch.
4. Provide stone dust (1 cu. yd.) path/apron to connect privy with the existing rest area driveway.
5. Stabilize exposed soils around privy with bark mulch (2 cu. yds.) and blend in with existing trees.

Install two toilet paper dispensers @ Smalls Falls

#5 Attean Overlook Rest Area (Replacement) **MaineDOT** Region 3

Somerset County
State Route 201, Jackman, Maine
(Northeast side of road approximately 5 miles south of Jackman Village)
Davis – Bacon ME5

#5 Site/Construction Notes:

1. No additional fill needed.
2. Finish floor elevation to be set in field with Project Manager for barrier free access between privy and existing paved drive. Stockpile any excess soil by old privy site and stabilize with layer of bark mulch.
3. Provide stone dust (2 cu. yds.) path/apron to connect privy with the existing sidewalk.
4. Stabilize exposed soils around privy with bark mulch (2 cu. yds.) and blend into existing trees.

#6 Taunton Bay Rest Area (New) **MaineDOT** Region 4

Hancock County
State Route 1, Hancock, Maine
(At the new rest area on left heading east just befor the Hancock/Sullivan Bridge)
Davis – Bacon ME5

#6 Site/Construction Notes:

1. Finish floor elevation to be 3" above top of curb next to existing curb cut.
2. Site will be cleared by MaineDOT prior to start of site work.
3. Minor excavation required
4. Do to existing low grade common borrow (18 cu. yds.) will be needed to place around tank for raising the overall grade of the privy. (see sideview of site below)
5. Provide stone dust (2 cu.yds.) path/apron to connect privy with existing driveway curb cut.
6. Stabilize exposed soils around privy with bark mulch (4 cu. yds.) and blend into existing trees.

#7 Tunk Lake Rest Area (New) **MaineDOT** Region 4

Hancock County
State Route 182, T10SD, Maine
(Between the Villages of Franklin and Cherryfield, approximately 7 miles west of Cherryfield)
Davis – Bacon ME5

#7 Site/Construction Notes:

1. Site excavation required. Finish floor elevation to be determined based on possible depth of excavation do to existing boulders or ledge encountered.
2. Tree branches will be cleared by MaineDOT prior to start of site work.
3. In addition to excavated soil, common borrow will be needed to place around tank.
4. Provide stone dust (2 cu. yds.) path/landing to connect privy with existing rest area driveway or parking area.
5. Stabilize exposed soils behind and on sides of privy with bark mulch (2 cu. yds.) and blend into existing trees.
6. Spread bark mulch on sides and behind privy to blend in with existing trees.
7. Retaining boulders and non-specified site work to be done by MaineDOT crew.
8. Any excess soil can be spread added to fill in gravel parking area across Rt. 182.

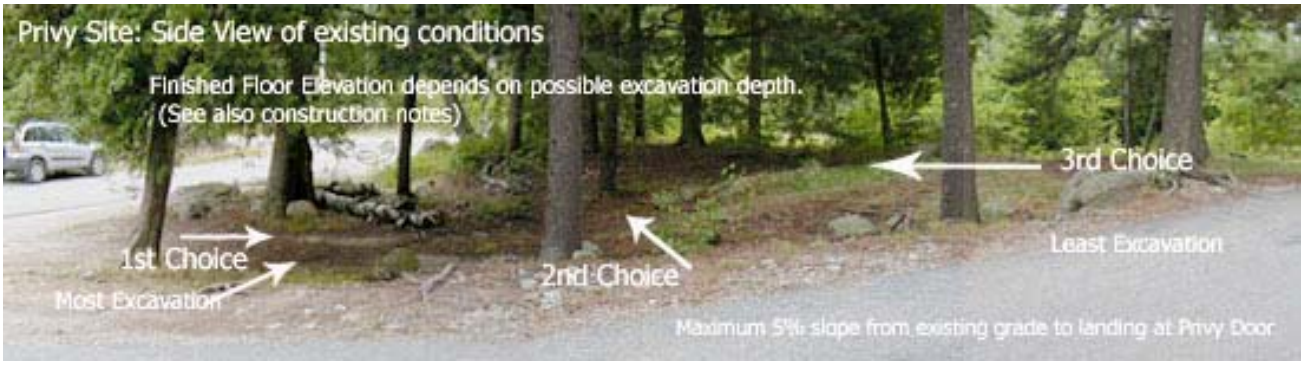

#8 Grindstone Rest Area (Replacement) **MaineDOT** Region 5

Penobscot County
State Route 11, Grindstone Twp, Maine
(Approximately 9 to 10 miles north of Medway and Exit 244 off I-95)
Davis – Bacon ME7

#8 Site/Construction Notes:

1. No additional fill needed. Remove excess soil from the site.
2. Finished floor elevation shall be equal to high point at proposed privy footprint location.
3. Provide stone dust (1.5 cu. yds) landing at door and 10 feet of 4'wide path to connect privy with proposed pathway to be built by MaineDOT crew from lower parking area to privy stone dust path.
4. Stabilize exposed soils behind the privy with bark mulch (2 cu. yds.) and blend into existing trees.
5. Stabilize disturbed lawn areas and exposed soils in front of the privy with MaineDOT #2 seed and hay mulch.

#9 **Cold Spring Rest Area** (Replacement) **MaineDOT** Region 5

Aroostook County
State Route 11, T7R5 WELS, Maine
(On left approximately 2.3 miles north of the intersection of Route 212 and Route 11)
Davis – Bacon ME5

#9 Site/Construction Notes:

1. Side of privy is located approximately 40' from edge of pavement. Prune some limbs if needed.
2. No additional fill needed.
3. Stockpile excess soil next to old privy and path and stabilize with layer of bark mulch.
4. Finished floor elevation shall be equal to high point at proposed privy footprint location.
5. Provide stone dust (2 cu. yds.) landing at door and connect privy path to existing parking area/driveway.
6. Stabilize exposed soils behind and on sides of privy with bark mulch (2 cu. yds.) and blend into existing trees.
7. Stabilize disturbed lawn areas and exposed soils in front of the privy with MaineDOT #2 seed and hay mulch.

#10 Oxbow Rest Area (Replacement) **MaineDOT** Region 5

Aroostook County
State Route 11, T9R5 WELS, Maine
(On right approximately 16.7 miles north of the intersection of Route 212 and Route 11)
Davis – Bacon ME5

#10 Site/Construction Notes:

1. Tree branches will be cleared by MaineDOT prior to start of site work.
2. No additional fill needed.
3. Stockpile excess soil and stabilize with layer of bark mulch on right side path to old privy.
4. Finished floor elevation 3" above existing grade of rest area drive adjacent to privy.
5. Provide stone dust (1 cu. yd.) path/apron to connect privy to the existing rest area drive.
6. Stabilize exposed soils with bark mulch (2 cu. yds.) and spread around sides and back of privy to tie into existing trees.

#11 Hedgehog Mtn. Rest Area (Replacement) **MaineDOT** Region 5

Aroostook County
State Route 11, T15R6 WELS, Maine
(On left approximately 54 miles north of the intersection of Route 212 and Route 11)
Davis – Bacon ME5

#11 Site/Construction Notes:

1. Section of existing log guardrail to be removed by MaineDOT crew prior to start of construction.
2. No additional fill needed and be careful of roots when excavating for new privy tank.
3. Set side of privy to be parallel to old privy path.
4. Stockpile any excess soil to right of old privy and stabilize with layer of bark mulch.
5. Finished floor elevation shall be equal to high point at proposed privy footprint location to allow drainage around both sides of the privy.
6. Provide stone dust (2.5 cu. yds.) landing at door and 20' long 4'wide path to connect privy with existing parking area.
7. Stabilize exposed soils behind and on sides of privy with bark mulch (2 cu. yds.) and blend into existing trees.
8. Stabilize disturbed lawn areas and exposed soils in front of the privy with MaineDOT #2 seed and hay mulch.

#12 Soldier Pond Rest Area (Replacement) **MaineDOT** Region 5

Aroostook County
State Route 11, Wallagrass, Maine
(On left approximately 7 miles south of Fort Kent)
Davis – Bacon ME5

#12 Site/Construction Notes:

1. No additional fill needed.
2. Remove any excess soil from site.
3. Finished floor elevation shall be equal to adjacent parking lot elevation.
4. Provide stone dust (1.0 cu. yds.) apron that connects privy to existing parking area/driveway.
5. Stabilize disturbed lawn areas and exposed soils around privy with MaineDOT #2 seed and hay mulch.

#13 Mopang (New) **MaineDOT** Region 4

Washington County
State Route 9, T30 MDBPP, Maine
(Approximately half-way between Bangor and Calais)
Davis – Bacon ME5

#13 Site/Construction Notes:

1. No additional fill needed. Remove excess fill from site.
2. Set privy finished floor elevation with maximum 3% slope to parking area drive.
3. Provide stone dust (2.0 cu.yds.) for landing and apron to connect privy with parking area drive.
4. Stabilize exposed soils behind and on sides of privy with bark mulch (2 cu. yds.) and blend into existing landscape plantings.
5. Stabilize disturbed lawn areas and exposed soils in front of the privy with MaineDOT #2 seed and hay mulch.

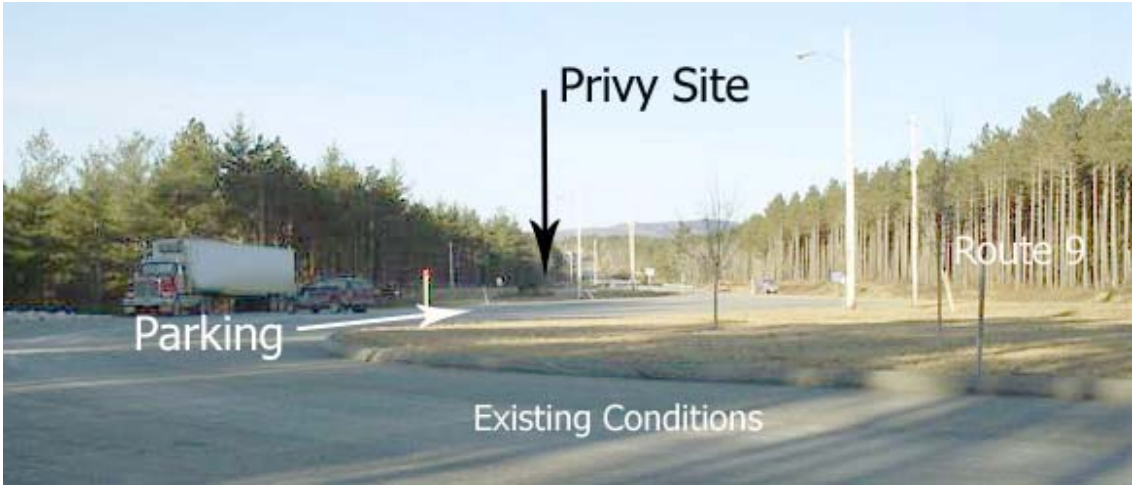

December 2006
PIN# 12829

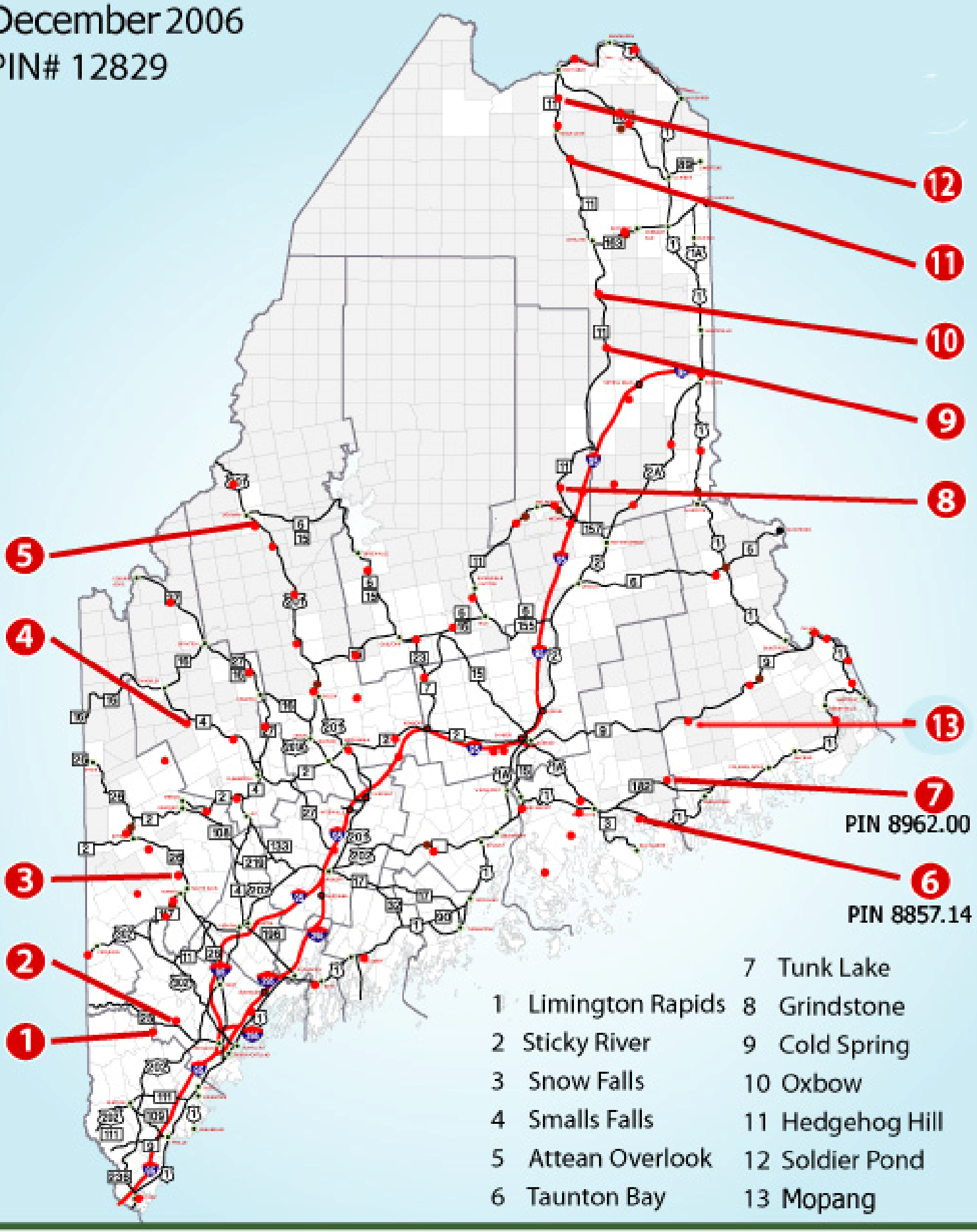

1 Limington Rapids
2 Sticky River
3 Snow Falls
4 Smalls Falls
5 Attean Overlook
6 Taunton Bay
7 Tunk Lake
8 Grindstone
9 Cold Spring
10 Oxbow
11 Hedgehog Hill
12 Soldier Pond
13 Mopang

MaineDOT

Rest Area Sanitation (Statewide)
SITE LOCATIONS

General Notes

1. All work performed under this contract shall be governed by and conform to the Standard Specifications (Revision December 2002) and the Supplementals thereto, together with the Standard Details (Revision Dec. 2002) and the Supplementals thereto, as modified by the plans or Special Provisions.
2. Contractors will have the option of fabricating these buildings off-site for inspection and partial payment prior to on-site delivery and final installation and incidental site-work.
3. This job will be subject to Davis – Bacon Heavy Wages.
4. No utility involvement is anticipated. The contractor shall confirm the absence of utilities on all project sites prior to beginning construction. Call Dig Safe 1-800-225-4977.
5. Work will be permitted ONLY between the hours of 7:00 A.M. and 5:00 P.M. (EST).
6. No lane closures will be permitted.
7. The contractor shall not be permitted to have an on-site storage or staging area.
8. The contractor will be a Contractor pre-qualified by MDOT for Building(s) projects.
9. The contractor shall dispose of all debris in accordance with state and federal regulations.
10. This work will be scheduled with the Project Manager/MDOT Landscape Architect Larry Johannesman at (207)624-3448 to provide on-site inspection as required.
11. Any damage to existing structures, guardrail, drainage ways and/or slopes caused by the contractor's equipment, personnel or operation shall be repaired to the satisfaction of the Engineer. All work, equipment and materials required to make repairs shall be at the contractor's expense.
12. On-site work will be scheduled between April 1, 2007 and all work will be completed by June 30th, 2007 subject to liquidated damages as stipulated in the contract.
13. Privy building signage to be done by MaineDOT.
14. Existing privies to be removed by MaineDOT.
15. Contractor shall verify all privy locations with Project Manager prior to start of construction.
16. Privy photo-simulations do not represent as-built images. They show site information, building location and orientation, and site conditions and access.
17. A pre-construction meeting will be scheduled at MDOT Headquarters in Augusta after successful award of this contract.

* * *

GENERAL DECISION: **ME20030005** 06/02/2006 ME5

Date: June 2, 2006
General Decision Number: **ME20030005** 06/02/2006

Superseded General Decision Number: ME020005

State: Maine

Construction Type: Heavy

Counties: Aroostook, Hancock, Kennebec, Knox, Lincoln, Piscataquis, Sagadahoc, Somerset, Waldo and Washington Counties in Maine.

HEAVY CONSTRUCTION PROJECTS

Modification Number	Publication Date
0	06/13/2003
1	10/10/2003
2	07/30/2004
3	07/29/2005
4	06/02/2006

* ENGI0004-013 04/01/2006

	Rates	Fringes
Power equipment operators:		
Cranes	$ 17.33	7.80
Drillers	$ 17.33	7.80
Mechanics	$ 17.33	7.80
Oilers	$ 17.33	7.80

IRON0496-002 09/16/2003

	Rates	Fringes
Ironworker, Structural	$ 20.15	14.99

SUME2000-004 10/24/2000

	Rates	Fringes
Carpenters: (including Form Work)	$ 14.17	2.11
Electrician	$ 13.67	1.39
Ironworker, Reinforcing	$ 29.00	3.32
Laborers:		
Flaggers	$ 6.00	
Pipelayers	$ 10.79	.60
Unskilled	$ 9.80	
Power equipment operators:		
Backhoes	$ 11.89	1.15
Bulldozers	$ 11.81	1.78

```
     Excavator...................$ 13.40            3.78
     Graders.....................$ 12.10            1.40
     Loaders.....................$ 12.40            2.88
     Pavers......................$  7.50
     Piledrivers.................$ 17.25
     Rollers.....................$ 10.18            1.46

  Truck drivers:
     Dump........................$  9.17             .76
-----------------------------------------------------------------

WELDERS - Receive rate prescribed for craft performing
operation to which welding is incidental.
=================================================================

Unlisted classifications needed for work not included within
the scope of the classifications listed may be added after
award only as provided in the labor standards contract clauses
(29CFR 5.5 (a) (1) (ii)).

-----------------------------------------------------------------

In the listing above, the "SU" designation means that rates
listed under the identifier do not reflect collectively
bargained wage and fringe benefit rates.  Other designations
indicate unions whose rates have been determined to be
prevailing.

-----------------------------------------------------------------

            WAGE DETERMINATION APPEALS PROCESS

1.) Has there been an initial decision in the matter? This can
be:

*  an existing published wage determination
*  a survey underlying a wage determination
*  a Wage and Hour Division letter setting forth a position on
   a wage determination matter
*  a conformance (additional classification and rate) ruling

On survey related matters, initial contact, including requests
for summaries of surveys, should be with the Wage and Hour
Regional Office for the area in which the survey was conducted
because those Regional Offices have responsibility for the
Davis-Bacon survey program. If the response from this initial
contact is not satisfactory, then the process described in 2.)
and 3.) should be followed.

With regard to any other matter not yet ripe for the formal
process described here, initial contact should be with the
Branch of Construction Wage Determinations.  Write to:

        Branch of Construction Wage Determinations
        Wage and Hour Division
        U.S. Department of Labor
        200 Constitution Avenue, N.W.
        Washington, DC 20210

2.) If the answer to the question in 1.) is yes, then an
```

interested party (those affected by the action) can request review and reconsideration from the Wage and Hour Administrator (See 29 CFR Part 1.8 and 29 CFR Part 7). Write to:

Wage and Hour Administrator
U.S. Department of Labor
200 Constitution Avenue, N.W.
Washington, DC 20210

The request should be accompanied by a full statement of the interested party's position and by any information (wage payment data, project description, area practice material, etc.) that the requestor considers relevant to the issue.

3.) If the decision of the Administrator is not favorable, an interested party may appeal directly to the Administrative Review Board (formerly the Wage Appeals Board). Write to:

Administrative Review Board
U.S. Department of Labor
200 Constitution Avenue, N.W.
Washington, DC 20210

4.) All decisions by the Administrative Review Board are final.

==========

END OF GENERAL DECISION

GENERAL DECISION: **ME20030006** 12/15/2006 ME6

Date: December 15, 2006
General Decision Number: **ME20030006** 12/15/2006

Superseded General Decision Number: ME020006

State: Maine

Construction Type: Heavy

County: Cumberland County in Maine.

HEAVY CONSTRUCTION PROJECTS (Includes Sewer and Water Line Construction Projects)

Modification Number	Publication Date
0	06/13/2003
1	09/19/2003
2	07/30/2004
3	12/31/2004
4	11/18/2005
5	10/13/2006
6	12/15/2006

* BOIL0029-003 10/01/2006

	Rates	Fringes
Boilermaker	$ 27.64	8.96+25.6%

ELEC0567-003 09/01/2006

	Rates	Fringes
Electrician	$ 25.63	12.32

SUME2000-005 10/24/2000

	Rates	Fringes
Laborers:		
Unskilled	$ 12.43	.95
Power equipment operators:		
Backhoes	$ 13.75	1.42
Bulldozers	$ 11.25	1.31
Excavators	$ 13.79	1.86
Loaders	$ 10.95	1.22
Truck drivers:		
Dump	$ 9.50	.89

WELDERS - Receive rate prescribed for craft performing operation to which welding is incidental.

==========

Unlisted classifications needed for work not included within

the scope of the classifications listed may be added after award only as provided in the labor standards contract clauses (29CFR 5.5 (a) (1) (ii)).

In the listing above, the "SU" designation means that rates listed under the identifier do not reflect collectively bargained wage and fringe benefit rates. Other designations indicate unions whose rates have been determined to be prevailing.

WAGE DETERMINATION APPEALS PROCESS

1.) Has there been an initial decision in the matter? This can be:

* an existing published wage determination
* a survey underlying a wage determination
* a Wage and Hour Division letter setting forth a position on a wage determination matter
* a conformance (additional classification and rate) ruling

On survey related matters, initial contact, including requests for summaries of surveys, should be with the Wage and Hour Regional Office for the area in which the survey was conducted because those Regional Offices have responsibility for the Davis-Bacon survey program. If the response from this initial contact is not satisfactory, then the process described in 2.) and 3.) should be followed.

With regard to any other matter not yet ripe for the formal process described here, initial contact should be with the Branch of Construction Wage Determinations. Write to:

Branch of Construction Wage Determinations
Wage and Hour Division
U.S. Department of Labor
200 Constitution Avenue, N.W.
Washington, DC 20210

2.) If the answer to the question in 1.) is yes, then an interested party (those affected by the action) can request review and reconsideration from the Wage and Hour Administrator (See 29 CFR Part 1.8 and 29 CFR Part 7). Write to:

Wage and Hour Administrator
U.S. Department of Labor
200 Constitution Avenue, N.W.
Washington, DC 20210

The request should be accompanied by a full statement of the interested party's position and by any information (wage payment data, project description, area practice material, etc.) that the requestor considers relevant to the issue.

3.) If the decision of the Administrator is not favorable, an interested party may appeal directly to the Administrative

Review Board (formerly the Wage Appeals Board). Write to:

Administrative Review Board
U.S. Department of Labor
200 Constitution Avenue, N.W.
Washington, DC 20210

4.) All decisions by the Administrative Review Board are final.

==========

END OF GENERAL DECISION

GENERAL DECISION: **ME20030007** 06/02/2006 ME7

Date: June 2, 2006
General Decision Number: **ME20030007** 06/02/2006

Superseded General Decision Number: ME020007

State: Maine

Construction Type: Heavy

County: Penobscot County in Maine.

HEAVY CONSTRUCTION PROJECTS

Modification Number	Publication Date
0	06/13/2003
1	07/30/2004
2	07/29/2005
3	06/02/2006

* ENGI0004-014 04/01/2006

	Rates	Fringes
Power equipment operators:		
Graders	$ 17.33	7.80
Pavers	$ 17.33	7.80

SUME2000-006 10/24/2000

	Rates	Fringes
Cement Mason/Finisher	$ 12.09	.50
Laborers:		
Fence Erectors	$ 16.77	.33
Rakers	$ 13.11	2.25
Unskilled	$ 11.07	1.38
Power equipment operators:		
Backhoes	$ 14.59	3.33
Excavators	$ 12.24	.88
Loaders	$ 12.49	1.93
Rollers	$ 15.10	3.15
Truck drivers:		
Dump	$ 8.97	1.18
Tri axle	$ 10.05	.56

WELDERS - Receive rate prescribed for craft performing operation to which welding is incidental.

==========

Unlisted classifications needed for work not included within the scope of the classifications listed may be added after award only as provided in the labor standards contract clauses (29CFR 5.5 (a) (1) (ii)).

In the listing above, the "SU" designation means that rates listed under the identifier do not reflect collectively bargained wage and fringe benefit rates. Other designations indicate unions whose rates have been determined to be prevailing.

WAGE DETERMINATION APPEALS PROCESS

1.) Has there been an initial decision in the matter? This can be:

* an existing published wage determination
* a survey underlying a wage determination
* a Wage and Hour Division letter setting forth a position on a wage determination matter
* a conformance (additional classification and rate) ruling

On survey related matters, initial contact, including requests for summaries of surveys, should be with the Wage and Hour Regional Office for the area in which the survey was conducted because those Regional Offices have responsibility for the Davis-Bacon survey program. If the response from this initial contact is not satisfactory, then the process described in 2.) and 3.) should be followed.

With regard to any other matter not yet ripe for the formal process described here, initial contact should be with the Branch of Construction Wage Determinations. Write to:

Branch of Construction Wage Determinations
Wage and Hour Division
U.S. Department of Labor
200 Constitution Avenue, N.W.
Washington, DC 20210

2.) If the answer to the question in 1.) is yes, then an interested party (those affected by the action) can request review and reconsideration from the Wage and Hour Administrator (See 29 CFR Part 1.8 and 29 CFR Part 7). Write to:

Wage and Hour Administrator
U.S. Department of Labor
200 Constitution Avenue, N.W.
Washington, DC 20210

The request should be accompanied by a full statement of the interested party's position and by any information (wage payment data, project description, area practice material, etc.) that the requestor considers relevant to the issue.

3.) If the decision of the Administrator is not favorable, an interested party may appeal directly to the Administrative Review Board (formerly the Wage Appeals Board). Write to:

Administrative Review Board

U.S. Department of Labor
200 Constitution Avenue, N.W.
Washington, DC 20210

4.) All decisions by the Administrative Review Board are final.

==========

END OF GENERAL DECISION

GENERAL DECISION: **ME20030008** 12/15/2006 ME8

Date: December 15, 2006
General Decision Number: **ME20030008** 12/15/2006

Superseded General Decision Number: ME020008

State: Maine

Construction Type: Heavy

Counties: Franklin, Oxford and York Counties in Maine.

HEAVY CONSTRUCTION PROJECTS

Modification Number	Publication Date
0	06/13/2003
1	09/19/2003
2	11/07/2003
3	07/30/2004
4	12/31/2004
5	02/04/2005
6	03/04/2005
7	06/03/2005
8	11/18/2005
9	06/02/2006
10	10/13/2006
11	12/15/2006

* BOIL0029-003 10/01/2006

	Rates	Fringes
Boilermaker	$ 27.64	8.96+25.6%

CARP1996-003 04/01/2006

	Rates	Fringes
Carpenters:		
Carpenter	$ 18.50	11.08
Millwright, Piledriver	$ 21.00	11.08

ELEC0490-002 06/01/2005

YORK COUNTY (Townships of Alfred, Lebanon, Sanford, Wells and area south thereof)

	Rates	Fringes
Electrician	$ 24.90	12.40
Teledata System Installer	$ 18.75	10.11

ELEC0567-004 09/01/2006

FRANKLIN COUNTY: Entire County excluding Carthage, Perkins Plantation, Temple Farmington, and Industry Township and are south thereof; OXFORD COUNTY; YORK COUNTY: Entire County excluding Alfred, Lebanon, Sanford and Wells Township and area

south thereof

	Rates	Fringes
Electrician.....	$ 25.63	12.32

ELEC1253-003 09/01/2006

FRANKLIN COUNTY: Townships of Carthage, Chesterville, Farmington, Industry, Jay, Perkins Pl., New Sharon, Temple, Washington Pl., Wilton

	Rates	Fringes
Electrician.....	$ 23.87	12.00

SUME2000-007 10/24/2000

	Rates	Fringes
Laborers:		
Landscape Laborers.....	$ 12.00	
Pipelayers.....	$ 13.98	
Unskilled.....	$ 10.66	5.85
Power equipment operators:		
Backhoes.....	$ 13.52	2.95
Bulldozers.....	$ 12.34	2.51
Excavators.....	$ 13.43	
Loader.....	$ 11.40	

WELDERS - Receive rate prescribed for craft performing operation to which welding is incidental.

==========

Unlisted classifications needed for work not included within the scope of the classifications listed may be added after award only as provided in the labor standards contract clauses (29CFR 5.5 (a) (1) (ii)).

In the listing above, the "SU" designation means that rates listed under the identifier do not reflect collectively bargained wage and fringe benefit rates. Other designations indicate unions whose rates have been determined to be prevailing.

WAGE DETERMINATION APPEALS PROCESS

1.) Has there been an initial decision in the matter? This can be:

* an existing published wage determination
* a survey underlying a wage determination
* a Wage and Hour Division letter setting forth a position on a wage determination matter

* a conformance (additional classification and rate) ruling

On survey related matters, initial contact, including requests for summaries of surveys, should be with the Wage and Hour Regional Office for the area in which the survey was conducted because those Regional Offices have responsibility for the Davis-Bacon survey program. If the response from this initial contact is not satisfactory, then the process described in 2.) and 3.) should be followed.

With regard to any other matter not yet ripe for the formal process described here, initial contact should be with the Branch of Construction Wage Determinations. Write to:

Branch of Construction Wage Determinations
Wage and Hour Division
U.S. Department of Labor
200 Constitution Avenue, N.W.
Washington, DC 20210

2.) If the answer to the question in 1.) is yes, then an interested party (those affected by the action) can request review and reconsideration from the Wage and Hour Administrator (See 29 CFR Part 1.8 and 29 CFR Part 7). Write to:

Wage and Hour Administrator
U.S. Department of Labor
200 Constitution Avenue, N.W.
Washington, DC 20210

The request should be accompanied by a full statement of the interested party's position and by any information (wage payment data, project description, area practice material, etc.) that the requestor considers relevant to the issue.

3.) If the decision of the Administrator is not favorable, an interested party may appeal directly to the Administrative Review Board (formerly the Wage Appeals Board). Write to:

Administrative Review Board
U.S. Department of Labor
200 Constitution Avenue, N.W.
Washington, DC 20210

4.) All decisions by the Administrative Review Board are final.

==========

END OF GENERAL DECISION

SPECIAL PROVISIONS
SECTION 104
Utilities

MEETING
A Preconstruction Utility Conference, as defined in Subsection 104.4.6 of the Standard Specifications **is not** required.

GENERAL INFORMATION
These Special Provisions outline the arrangements that have been made by MaineDOT for utilityand/or railroad work to be undertaken in conjunction with this project.

Temporary utility adjustments are not anticipated.
No utility relocation or adjustment work is planned, nor is any anticipated for this project. However, there may be utilities located within the limits of the project and therefore, precautions should be taken when initiating any subsurface work.

DIG SAFE
The contractor will be responsible for determining the presence of underground utility facilities prior to commencing any excavation work and shall notify utilities of proposed excavation in accordance with M.R.S.A. Title & 3360-A, Maine Dig Safe System. Call 1- 888- 344-7233.

Maintaining Utility Location Markings
The Contractor will be responsible for maintaining buried utility location markings following the initial locating by the appropriate utility or their designated representative.

THE CONTRACTOR SHALL PLAN AND CONDUCT HIS WORK ACCORDINGLY.

SPECIAL PROVISION
Section 105
LEGAL RELATIONS WITH AND RESPONSIBILTY TO PUBLIC
(NPDES)

105.8.2 Permit Requirements This section is revised by the addition of the following paragraph:

"The Contractor is advised that the Environmental Protection Agency has issued a final National Pollutant Discharge Elimination System (NPDES) General Permit for storm water discharges from construction sites disturbing more than 2 ha [5 acres]. This permit requires:

- Storm Water Pollution Prevention Plan
- Submission of a Notification of Intent (NOI) at least 48 hours before construction commences.
- Submission of a Notification of Termination (NOT) when a site has been finally stabilized and all storm water discharges from construction activities are eliminated.

If the project's land disturbances are 2 ha [5 acres] or more, the Department will prepare the plan and submit the NOI (and NOT). The contractor shall prepare plans and submit NOI's (and NOT's) for regulated construction activities beyond the project limits (e.g. borrow pits).

The Contractor shall be familiar with and comply with these regulations."

SPECIAL PROVISION
SECTION 107
TIME
(Limitation of Operations)
and
(Supplemental Liquidated Damages)

Once the Contractor commences work on this project the work shall be continuous through completion.

If the Contractor does not have prior written authorization from the Resident to suspend work, the Contractor shall be assessed supplemental liquidated damages at the rate of Two Hundred ($200.00) Dollars per day for each calendar day that work is not performed on the project.

For the purpose of this Special Provision suspension of work is defined as there being less than 70 percent of the normal work force required to perform the activities that were scheduled for that period. The Resident shall provide the sole decision as to whether the work has been suspended.

This assessment of supplemental liquidated damages will be in addition to the liquidated damages specified in Section 107of the Standard Specifications, Rev. 2002.

SPECIAL PROVISION
Section 107

TIME
(Contract Time)

On-site work on this project will not begin before**:** **April 1, 2007**

The specified contract completion date before which all work shall be completed is**:** **June 30, 2007**

* * *

SPECIAL PROVISION
Section 411
STONE DUST SURFACE COURSE

Description: This work shall consist of furnishing and installing Separation Geotextile and a 150mm deep Stone Dust Surface Course in conformity with the lines, grades, design and dimensions shown on the plans, this Special Provision, the Standard Specifications, particularly Sections 620 and 722, and as directed by the Project Resident.

Materials: The Geotextile used at the base of the surface course shall meet the requirements of Separation Geotextile, Subsection 722.04 of the Standard Specifications.

Stone Dust shall be from a process operation and shall be composed of fragments of clean durable stone crushed to conform to the following U.S. Sieve gradation, with a sample to be approved by the Project Resident prior to installation.

Metric Sieve Size	U.S. Size	Percent Passing
9.5mm	3/8”	100
4.75mm	#4	96-100
2.36mm	#8	60-75
1.18mm	#16	32-55
0.30mm	#50	8-28
0.15mm	#100	3-15
0.075mm	#200	2-8

Construction Requirements: A 150 mm deep course of stone dust shall be installed over an approved geotextile construction fabric in accordance with Standard Specifications Subsection 620.03. The Stone Dust Surface Course shall be mechanically compacted with cleanly defined mechanically installed edges as directed by the project engineer.

Method of Measurement: Stone Dust Surface Course will be measured by the square meter of the top surface, in place.

Basis of Payment: The accepted quantity of Stone Dust Path will be paid for at the contract unit price per square meter, complete, free of any debris, and accepted in place. The unit price shall be full compensation for excavation, backfill, installation of geotextile fabric, and furnishing all materials, labor, equipment, and other incidentals necessary to complete the work.

Payment shall be made under:

Pay Item	Pay Unit
411.131 Stone Dust Surface Course	Square Foot

May 10, 2006
Supersedes January 7, 2005

SPECIAL PROVISION
SECTION 652
MAINTENANCE OF TRAFFIC
Construction Sign Sheeting Material

Maine DOT is transitioning to super high intensity fluorescent retroreflective sheeting, ASTM D 4956 - Type VII, Type VIII, or Type IX (prismatic), for construction signs.

Currently serviceable Type III signs will be allowed until the final transition date. New signs bought after January 19, 2005 will conform to Type VII, Type VIII, or Type IX (prismatic) requirements. All signs will be Type VII, Type VIII, or Type IX (prismatic) after the final transition date of April 1, 2007.

During this transition period, sign packages will be of the same sheeting material (all Type III or all Type VII)

All Interstate Projects advertised after January 1, 2005 will be required to use the Type VII, Type VIII, or Type IX (prismatic) sheeting.

SPECIAL PROVISION
SECTION 656
Temporary Soil Erosion and Water Pollution Control

Standard Specifications, Section 656 is deleted and replaced by this Special Provision. The following information and requirements apply specifically to this Project.

1) If the Work includes the handling or storage of petroleum products or Hazardous Materials including the on site fueling of Equipment, the Resident must be provided with a Spill Prevention Control and Countermeasure Plan (SPCCP) for his/her approval. At a minimum, the SPCCP shall include:

   a) The name and emergency response numbers (telephone number, cellular phone and pager numbers, if applicable) of the Contractor's representative responsible for spill prevention;

   b) General description and location of (1) handling, transfer, storage, and containment facilities of such products or Materials ("activities and facilities") and (2) potential receptors of such products or Materials including oceans, lakes, ponds, rivers, streams, wetlands, and sand and gravel aquifers ("sensitive resources") including the distances between said activities and facilities and said sensitive resources;

   c) Description of preventative measures to be used to minimize the possibility of a spill including Equipment and/or Materials to be used to prevent discharges including absorbent Materials,

   d) A contingency response plan to be implemented if a spill should occur including a list of emergency phone/pager numbers including the Contractor's representative, MDEP Spill Response, the Resident, and local police and fire authorities. For a related provision, see *Standard Specification, Section 105.2.2 - Project Specific Emergency Planning*.

2) The following information and requirements will constitute the Soil Erosion and Water Pollution Control Plan for this Project. The soil erosion and water pollution control measures associated with this work are as follows:

   a) All work shall be done in accordance with the latest revision of the Maine Department of Transportation Best Management Practices for Erosion and Sediment Control (a.k.a. Best Management Practices manual or BMP Manual). The "Table of Contents" of the latest version is dated "1/19/00" (available at http://www.state.me.us/mdot/mainhtml/bmp/bmpjan2000.pdf.)

   b) The on-site person responsible for implementation of this plan, shall be the Contractor's Superintendent or other supervisory employee (the "Environmental Coordinator") with the authority to immediately remedy any deficient controls and shall provide the Resident with their numbers (telephone number, cellular phone and pager numbers, if applicable) where the Environmental Coordinator can be reached 24 hours a day.

   c) A sediment control BMP, such as Erosion Control Mix Berm shall be installed on the contour and down-gradient from any earth disturbance before that disturbance begins.

SPECIAL PROVISION
SECTION 656
Temporary Soil Erosion and Water Pollution Control

d) All areas where soil is disturbed shall be mulched on a daily basis. Areas will be seeded within 12 hours once finished grade has been established. All previously mulched areas shall be maintained and re-mulched on a daily basis if bare areas develop until an acceptable growth of grass has been obtained.

e) Disturbed earth materials shall be disposed of in accordance with all federal, state, and local laws and regulations. If the materials will be stockpiled on-site they shall be contained on-site to prevent sediments from entering any drainage system or from washing into a protected water body or resource.

f) If the earth materials will be reused on-site, they shall be mulched at the end of each working day, and seeded in accordance with *Standard Specification, Section 618 - Seeding*, unless the contract states otherwise. The materials shall be contained, as necessary, to prevent sediments from entering any drainage system or from washing into a protected water body or resource.

g) Winter stabilization BMPs shall be applied in accordance with the MDOT BMP Manual between November 1 and April 15 or during frozen ground conditions.

h) The Environmental Coordinator must inspect and maintain daily all erosion and sediment controls for the duration of the project.

i) Any costs related to this plan shall be considered incidental to the contract.

j) If the Project Resident directs activity that involves soil disturbance beyond the auguring and/or trenching activities or that involve In-stream Work, all permits shall be obtained by the DOT, the Standard Specification 656 shall be re-instituted, and a full SEWPCP will be required and paid for as Extra Work, prior to the start of the new activity.

STATE OF MAINE
DEPARTMENT OF TRANSPORTATION
REST AREA SANITATION
STATEWIDE

Projects #'s

STP-12829(000)X	Pin 12829.00
SB-ME-99(002)	Pin 8962.00
SB-ME- 1(005)	Pin 8857.14

SPECIFICATIONS AND DRAWINGS

November 20, 2006

A. For all work included in this contract the more stringent of the following provisions shall prevail:
   1. Drawings and general provisions of the Contract, including General and Supplementary Conditions and other Division 1 Specification Sections, apply to all sections.
   2. State of Maine Department of Transportation, "Standard Specifications for Highways and Bridges," Revision 2002, shall govern all work under this contract in accordance with the contract documents.

allied *engineering, inc.*

FULL SERVICE CONSULTING ENGINEERS

STRUCTURAL • MECHANICAL • ELECTRICAL • ENVIRONMENTAL • CONSTRUCTION ADMINISTRATION
One Westbrook Common • Westbrook, Maine 04092-2804 • Telephone 207-854-8126

SECTION 01060 – REGULATORY AND SAFETY REQUIREMNETS

PART 1 - GENERAL

1.1 SUMMARY

A. This Section includes administrative and procedural requirements governing regulatory and safety requirements.

1.2 REGULATORY REQUIREMENTS

A. The Contractor will be responsible for compliance with all applicable Occupational Safety and Health Administration-(OSHA) Standards; United States Department of Environmental Protection-National Emissions Standards for Hazardous Air Pollutants-(EPA-NESHAPS) Asbestos Regulations - 40 CFR 61, Subpart M. and Maine Department of Environmental Protection-(DEP) rules and regulations.

B. The Contractor agrees to indemnify and hold harmless Allied Engineering and the Owner from any expenses caused by a decision of an authorized representative of the State of Maine or the United States Department of Labor in connection with an alleged violation of the provisions of either the Construction Safety Act of 1969 or the Williams-Steiger Occupational Safety and Health Act of 1970, including fines, penalties or corrective measures caused by commission or omission by the Contractor, his employees, assigns or agents.

C. All work shall be performed in accordance with Occupational Safety and Health Administration Standards 29 CFR 1910.1001 and 1926.58 (latest revision) to include the OSHA Thirty Minute Excursion Limit. Respiratory Protection will comply with all of Paragraph 29 CFR 1910.134. All work and work areas covered in this contract will be subject to inspections by representatives of the Occupational Safety and Health Administration-(OSHA) to ensure that employees and the general public are not subject to hazardous working conditions or environment.

D. The Contractor shall be responsible for posting "Material Safety and Data Sheets" (MSDS) as required by the U.S. Department of Labor Occupational Safety and Health Administration for use on all materials used on site.

E. The Contractor shall be responsible for full compliance with 29 CFR 1926.59 Hazard Communication.

1.3 PERMITS

A. Comply with codes, ordinances, rules, regulations, orders, and other legal requirements of public authorities which bear on performance of work.

1.4 SAFETY REQUIREMENTS

A. Project shall be considered a hard hat area. No visitors shall be permitted on the premises except to the construction trailer without hard hats. Two hard hats shall be available to visitors at the construction trailer provided visitors are authorized by the Contractor, Project Manager, or Owner to visit the site.

B. The Contractor shall be responsible for notification to all workers, visitors, Owner's employees and representatives that may be reasonably expected to come in contact with Hazardous Materials as defined in 29 CFR 1926.59.

C. Contractor Employees: The Contractor shall furnish sufficient personnel to perform all work specified within the contract.

1. The Contractor's employees will conduct themselves in a proper and efficient manner at all times.
2. The Contractor expressly agrees to remove from the site any individual whose continued employment is deemed by the Project Manager to be contrary to the public interest or inconsistent with the best interest of the State of Maine programs and services.

D. Damage or Loss of Contractor's Supplies and Contractor's Employees' Property: The Contractor is responsible for taking the action necessary to protect his supplies, materials, and equipment and the personal property of his employees from loss, damage, or theft. The Contractor shall be responsible for all damages to persons and/or property that occur as a result of his fault or negligence in connection with the prosecution of the work. He shall also be responsible for all materials delivered and work performed until completion and final acceptance.

E. Manholes and Confined Spaces:

1. Contractors are obliged and fully expected when working in manholes to follow 29 CFR 1910 and 29 CFR 1926 and should be guided by the National Institute of Occupational Safety and Health (NIOSH) criteria document for confined spaces.
2. Guarding Manholes and Street Openings: When covers of manholes or vaults are removed, the opening shall be promptly guarded by a railing, temporary cover, or other suitable temporary barrier which is appropriate to prevent an accidental fall through the opening and to protect employees working in the manhole from foreign objects entering the manhole.
3. While work is being performed in the manhole, a person with basic first aid training shall be immediately available to render assistance if there is cause for believing that a safety hazard exists.
4. Before an employee enters a manhole or confined spaces, the following steps shall be taken:

    a. The internal atmosphere shall be tested for combustible gas and, except when continuous forced ventilation is provided, the atmosphere shall also be tested for oxygen deficiency.
    b. When unsafe conditions are detected by testing or other means, the work area shall be ventilated and otherwise made safe before entry.

5. An adequate continuous supply of air shall be provided while work is performed in manholes or confined spaces under any of the following conditions:

a. Where combustible or explosive gas vapors have been initially detected and subsequently reduced to a safe level by ventilation.
b. Where organic solvents are used in the work procedure.
c. Where open flame torches are used in the work procedure.
d. Where the manhole is located in the portion of a public right of way open to vehicular traffic and/or exposed to a seepage of gas or gasses.
e. Where a toxic gas or oxygen deficiency is found.

6. In no way will the Owner or the Asbestos Project Specialist perform confined space inspections for a Contractor. If the Owner, Asbestos Project Specialist, Workers, and Contractor are in the same confined space, the Contractor is still obligated to have a competent person check the space.

END OF SECTION

SECTION 01100 – SUMMARY OF WORK

PART 1 - GENERAL

1.1 RELATED DOCUMENTS

A. The more stringent of the following provisions shall prevail for all work related to this project:
   1. Drawings and general provisions of the Contract, including General and Supplementary Conditions and other Division 1 Specification Sections, apply to this Section.
   2. State of Maine Department of Transportation, "Standard Specifications for Highways and Bridges," Revision 2002, apply to this Section..

1.2 WORK COVERED BY CONTRACT DOCUMENTS

A. Project Identification: Project consists of thirteen (13) waterless privies and all work incidental to construction and site-work for a turn-key project. The various items of work for this project are hereinafter specified under the respective branch headings of the work or shown on the accompanying drawings and shall be included in the contracts made for the completion of any respective divisions of the work. Such contracts shall also include necessary details reasonably incidental to the proper execution and completion of such work.

   1. Project Locations:

	Rest Area	State Road	Town
1.	Limington Rapids	Rt. 25	Standish
2.	Sticky River	Rt. 114	Standish
3.	Snow Falls	Rt. 26	West Paris
4.	Smalls Falls	Rt. 4	TWP E
5.	Attean Overlook	Rt. 201	Jackman
6.	Taunton Bay	Rt. 1	Hancock
7.	Tunk Lake	Rt. 182	T10 SD
8.	Grindstone	Rt. 11	Grindstone TWP
9.	Cold Spring	Rt. 11	T7R5 WELS
10.	Oxbow	Rt. 11	T9R5 WELS
11.	Hedgehog Mtn.	Rt. 11	T15R6 WELS
12.	Soldier Pond	Rt. 11	Wallagrass
13.	Mopang	Rt. 9	T30 MDBPP

B. Whenever a conflict, contradiction, or discrepancy between any statutes, regulations, plans or specifications, or if the Contractor request clarification of his responsibilities hereunder, it is the Contractor's responsibility to obtain the advance written approval of the Project Manager prior to deviating from any of the specifications.

C. The Work consists of building 13 privy buildings, preferably built at contractor owned location. Upon acceptance of the buildings, transport the buildings to the individual sites and install a 1000 gallon Polyethylene tank with a structural support column and concrete slab and sill per specifications, and installation of the building and all incidental associated work. Work will

include all incidental site work required for a complete turn-key project. The contract will include the excavation of 6” of existing top soil and installation of a 6” deep stone dust walk at each site on a unit cost basis. Incidental seeding and /or mulching with wood waste erosion control mulch or bark mulch will also be on a unit cost basis.

1.3 CONTRACT METHOD

A. Project will be constructed under a single contract

1.4 CONTRACTOR’S USE OF PREMISES

A. Confine operations at site to areas permitted by:

1. Law, Ordinances, Permits, Contract Documents.
2. As defined by limit of work line on Site Plan.

B. Limited on-site storage of materials will be permitted.

C. The establishment of a camp within the project site will not be permitted.

D. The contractor shall at all times conduct his operations to insure the least inconvenience to the public. Partial site / road closings will be permitted upon request of the owner.

E. Contractor shall not limit use of premises to Owner or public.

F. Coordinate work with the owner, MDOT Landscape Architect @ 207-624-3448

1.5 OWNER PROVIDED MATERIALS/ INFORMATION

A. LAYOUT OF WORK

1. The owner will set the base line, stake out the final location and a finish floor bench mark for each site. The contractor shall lay out the work by accurately measuring from these controls. All work improperly located due to contractor’s errors or omissions shall be corrected by him at no additional expense.

B. The contractor shall preserve the controls established by the owner. Controls set by the owner that are destroyed by the contractor will be replaced by the owner, with the cost of the replacement deducted from the contractors’ final payment.

C. Locations and elevations are subject to final field adjustment by the owner before construction. The contractor shall immediately notify the owner of apparent errors discovered. If changes in stake out are required, the contractor shall cooperate with the owner in prompt establishment of field corrected controls.

D. Contractor shall ensure positive drainage. Notify the owner of any apparent discrepancies to correct situations before proceeding.

1.6 WORK UNDER OTHER CONTRACTS

A. Cooperate fully with separate contractors so work on those contracts may be carried out smoothly, without interfering with or delaying work under this Contract.

1.7 DRAWINGS FURNISHED

A. On the award of the contract, the owner will issue to the Contractor 5 sets of the "Contract Drawings and Specifications" for use in his office and on the job. The Project Manager will also furnish such additional copies as may be required for submission to public authorities to accompany applications for permits

B. Additional copies of drawings and specifications will be issued at cost of reproduction.

C. It is the intention that these specifications and the drawings accompanying same shall provide for "Maine DOT Rest Area Sanitation Privy Facilities" to be completed in all its respective parts. Any work shown on the drawings and not particularly described in the specifications, or vice versa, shall be furnished by the Contractor as part of his contract.

1.8 EXAMINATION OF THE SITE

A. All Contractors' submitting proposals for the work shall first examine the site and all conditions thereon. All proposals shall take into consideration all such conditions as may affect the work under this contract.

1.9 CONTRACTORS DUTIES

A. Asbestos-Free Materials: Contractor shall provide certification that all materials used for construction under this contract are 100% asbestos-free. Refer to Section 01340 – Shop Drawings, Product Data and Samples for submittals.

B. Except as specifically noted, provide and pay for:

1. Labor, materials and equipment.
2. Tools, construction equipment and machinery
3. Water, heat and utilities required for construction
4. Other facilities and services necessary for proper execution and completion of work

C. The owner will secure and pay for all permits, government fees, and licenses that are applicable at the time of bid for proper execution and completion of the work

D. Promptly submit written notice to the Project Manager of observed variance of Contract Documents from legal requirements.

1. Appropriate Modifications to Contract Documents will adjust necessary changes to comply with Codes and Regulations.
2. Assume responsibility for work known to be contrary to such requirements without notice

E. Enforce strict discipline and good order among employees. Do not employ unfit persons or persons unskilled in assigned task.

F. Contractor's employees shall not transport, drink, or have in their possession on the job site any intoxicating beverage. Possession of any controlled substances without a physician's prescription is also prohibited. Any Contractor's employee appearing to be under the influence of an intoxicating beverage or narcotics will be escorted off the property and turned over to a competent escort as determined by the Project Manager's Representative. Any vehicle found to contain controlled substances or controlled substance residue will be reported to the State Police for investigation.

G. Use or possession of firearms, ammunition and/or explosives is prohibited. Where explosives are required due to construction requirements, specific handling requirements and approvals are required.

H. Work Permit or Citizenship: The contractor shall certify, in writing, that all employees of the Contractor and Subcontractor are citizens of the United States or are otherwise legally entitled to be employed.

I. Motor Vehicles:

1. All employees operating motor vehicles shall have a valid Operator's License. All vehicles shall display a valid state license plate and inspection sticker if required in the state in which the vehicle is registered.

J. WEATHER PROTECTION:

1. During the construction period, it is the Contractor's responsibility that the building be under constant protection from the weather. Should there be any weather damage to the building's interior, such damage is to be rectified to the satisfaction of the Project Manager without cost to the owner.

K. COMPLETION DATE:

1. The anticipated completion date for completed construction and all incidental sitework of these facilities to the Owner is June 30, 2007. Work extending beyond this date shall be subject to liquidated damages in the amount of $100 per working day.

L. START DATE:

1. Except for site work, all work including shop drawings and submittals may commence upon entering a contract with the Owner.

END OF SECTION

SECTION 01250 - CONTRACT MODIFICATION PROCEDURES

PART 1 - GENERAL

1.1 SUMMARY

1.2 This Section specifies administrative and procedural requirements for handling and processing Contract modifications.

1.3 MINOR CHANGES IN THE WORK

A. The owner (MDOT) may issue supplemental instructions authorizing Minor Changes in the Work, not involving adjustment to the Contract Sum or the Contract Time, on the Change order form prescribed by Maine Department of Transportation.

1.4 CHANGE ORDER PROCEDURES

A. On Owner's approval of a Proposal Request, The owner will issue a Change Order for signatures of Owner and Contractor on the MDOT required form.

END OF SECTION

SECTION 01270 - UNIT PRICES

PART 1 - GENERAL

1.1 SUMMARY

A. This Section includes administrative and procedural requirements for unit prices.

DEFINITIONS

B. Unit price is [an amount proposed by bidders, stated on the Bid Form, as] a price per unit of measurement for materials or services added to or deducted from the Contract Sum by appropriate modification, if estimated quantities of Work required by the Contract Documents are increased or decreased.

1.2 PROCEDURES

A. Unit prices include all necessary material, plus cost for delivery, installation, insurance, [applicable taxes,] overhead, and profit.

B. Measurement and Payment: Refer to individual Specification Sections for work that requires establishment of unit prices. Methods of measurement and payment for unit prices are specified in those Sections.

C. Owner reserves the right to reject Contractor's measurement of work-in-place that involves use of established unit prices and to have this work measured, at Owner's expense, by an independent surveyor acceptable to Contractor.

END OF SECTION

SECTION 01290 – PAYMENT PROCEDURES

PART 1 - GENERAL

1.1 APPLICATIONS FOR PAYMENT

A. Application for Payment shall be submitted monthly to the Project Manager in accordance with the General Conditions. The Project Manager will evaluate individual and total requests; and if he concurs, he will forward to the Owner for payment as stated in the above General Conditions.

B. Each Application for Payment shall be consistent with previous applications and payments as certified by Project Manager and the owner representative and paid for by Owner.

1. Initial Application for Payment, Application for Payment at time of Substantial Completion, and final Application for Payment involve additional requirements.

C. Payment Application Times: The date for each progress payment shall be determined on site. The period of construction Work covered by each Application for Payment is the period indicated in the Agreement.

D. The Contractor shall present Application for Payment based on materials incorporated into the work and labor performed and a reasonable amount of materials delivered to the Project Manager and the owners representative not less than 5 work days prior to the scheduled monthly requisition meeting. Payments shall be authorized for 95% of the amount stated in the application, provided the Project Manager shall be satisfied with the correctness of the amount stated. The Project Manager may request the contractor adjust the requisition for payment amount to be paid to that which they (the Project Manager) shall deem to be just. No more than one payment on the contract shall be made in any one month.

E. For each calendar day that any work shall remain uncompleted after the date of completion specified in the contract, the amount per day listed below in the Schedule of Liquidated Damages shall be deducted from any money due the Contractor not as a penalty, but as liquidated damages, provided that due account shall be taken of any adjustment of the date of completion granted by Change Order.

END OF SECTION

SECTION 01310 – PROJECT MANAGEMENT AND COORDINATION

PART 1 - GENERAL

PART 2 - SUMMARY

A. This Section includes administrative provisions for coordinating construction operations on Project including, but not limited to, the following:

1. General project coordination procedures.
2. Conservation.
3. Coordination Drawings.
4. Administrative and supervisory personnel.
5. Project meetings.

B. The General contractor shall be responsible for over all coordination of the project

1. Each contractor shall participate in coordination requirements. Certain areas of responsibility will be assigned to a specific contractor.

2.2 COORDINATION

A. Coordination: Coordinate construction operations included in various Sections of the Specifications to ensure efficient and orderly installation of each part of the Work. Coordinate construction operations, included in different Sections, that depend on each other for proper installation, connection, and operation. Coordinate sequence of work to accommodate Owner's occupancy.

B. If necessary, prepare memoranda for distribution to each party involved, outlining special procedures required for coordination. Include such items as required notices, reports, and list of attendees at meetings.

1. Prepare similar memoranda for Owner and separate contractors if coordination of their Work is required.

C. Coordination of Security: All security coordination shall be through the General contractor. The Contractor shall be expected to keep the owners representative informed of any deviation in the normal work schedule. The owners representative shall be given a minimum of two (2) hours notice when a Contractor is not going to be working on a scheduled day because of inclement weather, lack of material etc.

D. Administrative Procedures: Coordinate scheduling and timing of required administrative procedures with other construction activities and activities of other contractors to avoid conflicts and to ensure orderly progress of the Work. Such administrative activities include, but are not limited to, the following:

1. Preparation of Contractor's Construction Schedule.
2. Preparation of the Schedule of Values.

3. Installation and removal of temporary facilities and controls.
4. Delivery and processing of submittals.
5. Attendance of the Preconstruction Conference
6. Attendance of Progress meetings.
7. Preinstallation conferences.
8. Project closeout activities.

E. Conservation: Coordinate construction activities to ensure that operations are carried out with consideration given to conservation of energy, water, and materials.

2.3 SUBMITTALS

A. Coordinate work of various sections having interdependent responsibilities for installing, connecting to, and placing in service such equipment.

B. Coordinate requests for substitutions to assure compatibility of space, of operating elements, and effect on work of other sections.

C. Coordination Drawings: Prepare Coordination Drawings if limited space availability necessitates maximum utilization of space for efficient installation of different components or if coordination is required for installation of products and materials fabricated by separate entities.

1. Indicate relationship of components shown on separate Shop Drawings.
2. Indicate required installation sequences.
3. Refer to Division 15 Section "Basic Mechanical Materials and Methods" and Division 16 Section "Basic Electrical Materials and Methods" for specific Coordination Drawing requirements for mechanical and electrical installations.

D. Staff Names: Within 5 days of starting construction operations, submit a list of principal staff assignments, including superintendent and other personnel in attendance at Project site. Identify individuals and their duties and responsibilities; list addresses and telephone numbers, including home and office telephone numbers. Provide names, addresses, and telephone numbers of individuals assigned as standbys in the absence of individuals assigned to Project.

2.4 PRECONSTRUCTION CONFERENCE

A. The successful low bid Contractor will be required to attend a Pre-construction Conference Meeting at MDOT Headquarters Augusta, ME. At said meeting, the Contractor shall supply to the Owner and the Project Manager, in writing, the name of the Project Foreman and/or Manufacturer's Approved Applicator directing all phases of the installation.

2.5 PROGRESS MEETINGS

A. The Contractor will schedule and administer monthly construction progress meetings, called meetings, and preinstallation conferences throughout the progress of the work.

B. The Contractor will preside at meetings, record minutes, and distribute copies after meeting to the owner and the General contractor. The General contractor shall be responsible to provide copies of the minutes to any subcontractors that attend the meetings.

C. Location of Meetings: To be determined.

D. Attendance: The Contractor, Job Superintendent, Owner and any appropriate subcontractors..

E. Minimum Agenda:

1. Review of work progress.
2. Field observations, problems and decisions.
3. Identification of problems, which impede planned progress.
4. Review of submittals schedule and status of submittals.
5. Review of off-site fabrication and delivery schedules.
6. Maintenance of progress schedule.
7. Corrective measures to regain projected schedules.
8. Planned progress during succeeding work period.
9. Coordination of projected progress.
10. Maintenance of quality and work standards.
11. Effect of proposed changes on progress schedule and coordination.
12. Other business relating to work.
13. Preinstallation conferences may also be held at the Progress meetings.

2.6 PROJECT CLOSEOUT

A. Coordinate completion and cleanup of work of separate sections in preparation for substantial completion.

B. After Owner's occupancy of premises, coordinate access to site by various sections for correction of defective work and work not in accordance with Contract Documents to minimize disruption of Owner's activities.

C. Assemble and coordinate closeout submittals specified.

END OF SECTION

SECTION 01320 - CONSTRUCTION PROGRESS DOCUMENTATION

PART 1 - GENERAL

1.1 SUMMARY

A. This Section includes administrative and procedural requirements for documenting the progress of construction during performance of the Work, including the following:

1. Contractor's Construction Schedule.

1.2 SUBMITTALS

A. Submittals Schedule: Submit 2 copies of schedule. Arrange the following information in a tabular format:

1. Scheduled date for first submittal.
2. Specification Section number and title.
3. Submittal category (action or informational).
4. Name of subcontractor.
5. Description of the Work covered.
6. Scheduled date for Project Manager’s final release or approval.

B. Preliminary Construction Schedule: Submit 2 printed copies; one a single sheet of reproducible media, and one a print.

C. Contractor's Construction Schedule: Submit 2 printed copies of initial schedule, one a reproducible print and one a blue- or black-line print, large enough to show entire schedule for entire construction period.

1.3 QUALITY ASSURANCE

A. Scheduling Consultant Qualifications: The Contractors schedule may be created and maintained by the contractors own forces.

B. Pre-scheduling Conference: If requested by the owner, a pre-scheduling conference shall be conducted at Project site. At this meeting all the owner, Project Manager and contractor shall Review methods and procedures related to the Preliminary Construction Schedule and Contractor's Construction Schedule, including, but not limited to, the following:

1. Verify availability of qualified personnel needed to develop and update schedule.
2. Discuss constraints, including phasing, work stages, and interim milestones.
3. Review time required for review of submittals and resubmittals.
4. Review requirements for tests and inspections by independent testing and inspecting agencies.

5. Review time required for completion and startup procedures.
6. Review and finalize list of construction activities to be included in schedule.
7. Review submittal requirements and procedures.
8. Review procedures for updating schedule.

1.4 COORDINATION

A. Coordinate Contractor's Construction Schedule with the Schedule of Values, list of subcontracts, Submittals Schedule, progress reports, payment requests, and other required schedules and reports.

1. Secure time commitments for performing critical elements of the Work from parties involved.
2. Coordinate each construction activity in the network with other activities and schedule them in proper sequence.

PART 2 - PRODUCTS

2.1 SUBMITTALS SCHEDULE

A. Preparation: Submit a schedule of submittals, arranged in chronological order by dates required by construction schedule. Include time required for review, resubmittal, ordering, manufacturing, fabrication, and delivery when establishing dates.

1. Coordinate Submittals Schedule with list of subcontracts, the Schedule of Values, and Contractor's Construction Schedule.
2. Initial Submittal: Submit within 15 days after date of Owner-Contractor Agreement a preliminary bar-chart schedule. Include submittals required during the first 60 days of construction. List those required to maintain orderly progress of the Work and those required early because of long lead time for manufacture or fabrication.

    a. At Contractor's option, show submittals on the Preliminary Construction Schedule, instead of tabulating them separately.

END OF SECTION

SECTION 01770 - CLOSEOUT PROCEDURES

PART 1 - GENERAL

1.1 SUBSTANTIAL COMPLETION

A. Preliminary Procedures: Before requesting inspection for determining date of Substantial Completion, complete the following. List items below that are incomplete in request.

1. Prepare a list of items to be completed and corrected (punch list), the value of items on the list, and reasons why the Work is not complete.
2. Submit specific warranties, workmanship bonds, maintenance service agreements, final certifications, and similar documents.
3. Prepare and submit Project Record Documents, operation and maintenance manuals. Complete final cleaning requirements, including touchup painting.
4. Touch up and otherwise repair and restore exposed finishes to eliminate visual defects.

B. Inspection: Submit a written request for inspection for Substantial Completion. On receipt of request, The Owner will either proceed with inspection or notify Contractor of unfulfilled requirements. The owner will prepare the Certificate of Substantial Completion after inspection or will notify Contractor of items, either on Contractor's list or additional items identified that must be completed or corrected before certificate will be issued.

1. Reinspection: Request reinspection when the Work identified in previous inspections as incomplete is completed or corrected.
2. Results of completed inspection will form the basis of requirements for Final Completion.

1.2 FINAL COMPLETION

A. Preliminary Procedures: Before requesting final inspection for determining date of Final Completion, complete the following:
1. Submit certified copy of The Substantial Completion inspection list of items to be completed or corrected (punch list), endorsed and dated by the owner. The certified copy of the list shall state that each item has been completed or otherwise resolved for acceptance.

B. Inspection: Submit a written request for final inspection for acceptance. On receipt of request, the Owner will either proceed with inspection or notify Contractor of unfulfilled requirements. The Owner will prepare a final Certificate for Payment after inspection or will notify Contractor of construction that must be completed or corrected before certificate will be issued.

1. Reinspection: Request reinspection when the Work identified in previous inspections as incomplete is completed or corrected.

1.3 LIST OF INCOMPLETE ITEMS (PUNCH LIST)

A. Preparation: Submit three copies of list. Include name and identification of each space and area affected by construction operations for incomplete items and items needing correction including, if necessary, areas disturbed by Contractor that are outside the limits of construction.

1. Organize items applying to each location by task. Include the following information at the top of each page:

   a. Location
   b. Date.
   c. Name of Contractor.
   d. Action and schedule

1.4 FINAL CLEANING

A. General: Provide final cleaning. Conduct cleaning and waste-removal operations to comply with local laws and ordinances and Federal and local environmental and antipollution regulations.

B. Cleaning: Employ experienced workers for final cleaning. Clean each surface or unit to condition expected in an average commercial building cleaning and maintenance program. Comply with manufacturer's written instructions.

1. Complete the following cleaning operations before requesting inspection for certification of Substantial Completion for entire Project or for a portion of Project:

   a. Clean Project site, yard, and grounds, in areas disturbed by construction activities, including landscape development areas, of rubbish, waste material, litter, and other foreign substances.
   b. Sweep paved areas broom clean. Remove petrochemical spills, stains, and other foreign deposits.
   c. Rake grounds that are neither planted nor paved to a smooth, even-textured surface.
   d. Remove tools, construction equipment, machinery, and surplus material from Project site.
   e. Remove snow and ice to provide safe access to building.
   f. Clean exposed exterior and interior hard-surfaced finishes to a dirt-free condition, free of stains, films, and similar foreign substances. Avoid disturbing natural weathering of exterior surfaces. Restore reflective surfaces to their original condition.
   g. Remove debris and surface dust from limited access spaces, including roofs, plenums, shafts, trenches, equipment vaults, manholes, attics, and similar spaces.
   h. Remove glazing compounds and other materials. Remove labels that are not permanent.
   i. Touch up and otherwise repair and restore marred, exposed finishes and surfaces. Replace finishes and surfaces that cannot be satisfactorily repaired or restored or that already show evidence of repair or restoration. Do not paint over "UL" and similar labels, including mechanical and electrical nameplates.

j. Clean plumbing fixtures to a sanitary condition, free of stains, including stains resulting from water exposure.

END OF SECTION

SECTION 02230 - SITE CLEARING

PART 1 - GENERAL

A. Tree Protection Zone: Area surrounding individual trees or groups of trees to be protected during construction, and defined by the drip line of individual trees or the perimeter drip line of groups of trees, unless otherwise indicated.

1.2 MATERIAL OWNERSHIP

A. Except for stripped topsoil or other materials indicated to remain Owner's property, cleared materials shall become Contractor's property and shall be removed from Project site.

1.3 PROJECT CONDITIONS

A. Utility Locator Service: Notify “Dig Safe” service for area where Project is located before site clearing.

B. Do not commence site clearing operations until temporary erosion and sedimentation control measures are in place.

PART 2 - PRODUCTS

2.1 SILT FENCE

A. Mirafi 100x geotextile fabric with net backing, 1- ½” nominal square hardwood post, and tensioning belt. 3 feet wide with integral belt laced through the reinforced top edge, and with UV protection. Silt fence shall be Envirofence, as manufactured by Nicolon Mirafi group, or approved equal.

B. Straw bales: shall be weed free, straw bales with nylon tie string or wire bound. Stake down with 1” square hardwood stakes a minimum of 3 feet long.

PART 3 - EXECUTION

PART 4 - PREPARATION

A. Protect and maintain benchmarks and survey control points from disturbance during construction.

B. Locate and clearly flag trees and vegetation to remain or to be relocated.

C. Protect existing site improvements to remain from damage during construction.

4.2 EROSION AND SEDIMENTATION CONTROL

A. Provide temporary erosion and sedimentation control measures to prevent soil erosion and discharge of soil-bearing water runoff or airborne dust to adjacent properties and walkways, according to requirements of authorities having jurisdiction.

B. Inspect, repair, and maintain erosion and sedimentation control measures during construction until permanent vegetation has been established.

C. Remove erosion and sedimentation controls and restore and stabilize areas disturbed during removal.

4.3 CLEARING AND GRUBBING

1. Do not remove trees, shrubs, and other vegetation indicated to remain or to be relocated.
2. Grind stumps and remove roots, obstructions, and debris extending to a depth of 18 inches (450 mm) below exposed subgrade.

B. Fill depressions caused by clearing and grubbing operations with satisfactory soil material unless further excavation or earthwork is indicated.

1. Place fill material in horizontal layers not exceeding a loose depth of 8 inches (200 mm), and compact each layer to a density equal to adjacent original ground.

C. Remove sod and grass before stripping topsoil.

D. Stockpile topsoil materials away from edge of excavations without intermixing with subsoil. Grade and shape stockpiles to drain surface water. Cover to prevent windblown dust.

1. Limit height of topsoil stockpiles to 72 inches (1800 mm).
2. Do not stockpile topsoil within tree protection zones.
3. Stockpile surplus topsoil to allow for respreading deeper topsoil.

4.4 DISPOSAL

A. Disposal: Remove surplus soil material, unsuitable topsoil, obstructions, demolished materials, and waste materials including trash and debris, and legally dispose of them off of Owner's property.

END OF SECTION

SECTION 02250 - DEWATERING

PART 1 GENERAL

1.1 SECTION INCLUDES

A. Furnish, operate and maintain dewatering equipment for control, collection, and disposal of ground and surface water entering trenches and excavations.

1.1 RELATED DOCUMENTS

A. The more stringent of the following provisions shall prevail:
   1. Drawings and general provisions of the Contract, including General and Supplementary Conditions and other Division 1 Specification Sections, apply to this Section.
   2. State of Maine Department of Transportation, "Standard Specifications for Highways and Bridges," Revision 2002, apply to this Section.

PART 2 PRODUCTS

2.1 EQUIPMENT

A. Provide pumps, drains, piping and other facilities necessary to keep excavations and trenches free of water including spare units available for immediate use in the event of equipment failure.

PART 3 EXECUTION

3.1 PROTECTION

A. Protect watercourses, sewer systems and adjacent properties from siltation by use of sediment ponds or other measures acceptable to Owner. Keep excavations clear of groundwater, surface water, seepage, sewage and stormwater using BMPs.

3.2 INSTALLATION

A. Install, construct and maintain equipment and facilities required for work of this section.

B. Dispose of water removed from Work in a suitable manner which will not interfere with other work, cause erosion, damage pavements, other surfaces or property and is acceptable to Owner:

C. Remove dewatering equipment and facilities when no longer required.

D. Backfill excavations in accordance with this project manual.

E. Repair damage resulting from dewatering operations.

END OF SECTION

SECTION 02250 - DEWATERING

PART 1 GENERAL

1.1 SECTION INCLUDES

A. Furnish, operate and maintain dewatering equipment for control, collection, and disposal of ground and surface water entering trenches and excavations.

1.1 RELATED DOCUMENTS

A. The more stringent of the following provisions shall prevail:
   1. Drawings and general provisions of the Contract, including General and Supplementary Conditions and other Division 1 Specification Sections, apply to this Section.
   2. State of Maine Department of Transportation, "Standard Specifications for Highways and Bridges," Revision 2002, apply to this Section.

PART 2 PRODUCTS

2.1 EQUIPMENT

A. Provide pumps, drains, piping and other facilities necessary to keep excavations and trenches free of water including spare units available for immediate use in the event of equipment failure.

PART 3 EXECUTION

3.1 PROTECTION

A. Protect watercourses, sewer systems and adjacent properties from siltation by use of sediment ponds or other measures acceptable to Owner. Keep excavations clear of groundwater, surface water, seepage, sewage and stormwater using BMPs.

3.2 INSTALLATION

A. Install, construct and maintain equipment and facilities required for work of this section.

B. Dispose of water removed from Work in a suitable manner which will not interfere with other work, cause erosion, damage pavements, other surfaces or property and is acceptable to Owner:

C. Remove dewatering equipment and facilities when no longer required.

D. Backfill excavations in accordance with this project manual.

E. Repair damage resulting from dewatering operations.

END OF SECTION

SECTION 02300 - EARTHWORK

PART 1 - GENERAL

1.1 SUMMARY

A. This Section includes the following:

1. Preparing subgrades for slabs-on-grade, walks and Mulched areas.
2. Excavating and backfilling for vaults and structures.
3. Drainage course for slabs-on-grade.
4. Subbase course for gravel walks.
5. Stone dust course for gravel walks.

B.

C. Existing Utilities: Do not interrupt utilities serving facilities occupied by Owner or others unless permitted in writing by Project Manager and then only after arranging to provide temporary utility services according to requirements indicated.

1. Notify Project Manager not less than two days in advance of proposed utility interruptions.
2. Do not proceed with utility interruptions without Project Manager's written permission.
3. Contact utility-locator service for area where Project is located before excavating.

PART 2 - PRODUCTS

PART 3 - SOIL MATERIALS

A. General: Provide borrow soil materials when sufficient satisfactory soil materials are not available from excavations. Materials shall be free of snow, ice, frozen material, clay lumps, mud, refuse, organic matter, brick, concrete, ashes or other objectionable objects.

1. Sieve analysis shall be in accordance with ASTM C136-96a

B. Structural fill/ Gravel:

1. Maine Department of Transportation (MDOT Standard Specification, Highway and Bridges 2002. Type A, screened or crushed gravel of hard durable particles free from vegetable matter, lumps or balls of clay and other deleterious substances.

2. The Gradation of the portions passing a 3-inch sieve shall meet the following:

Sieve Designation	Percent passing by Weight
2”	100%
1/2”	45%- 70%
1/4”	30%- 55%
No. 40	0%- 15%
No. 200	0%- 5%

C. Stone for Trench and foundation drains.

1. Gradation: ASTM C33-97, size No. 4.

Sieve Designation	Percent passing by Weight
2”	100%
1-1/2”	90%- 100%
1”	20%- 55%
3/4”	0%- 15%
3/8”	0%- 5%

D. Bedding:

1. Sand; Hard durable particles free from vegetable matter, lumps or balls of clay and other deleterious substances.
2. Gradation: MDOT 703.05 Aggregate for sand leveling.

Sieve Designation	Percent passing by Weight
3/4”	100%
3/8”	85%- 100%
No. 200	0%- 5%

E. Common Fill

1. General

a. Soil suitable for embankment construction with a maximum 6” stone size. It shall be free from vegetable matter, lumps or balls of clay and other deleterious substances. The moisture content shall be sufficient to provide the required compaction and stability.
b. Reused fill: Use approved excavated material before importing common borrow.

2. Borrow Fill: When excavated material is not available or is not approved for reuse, import fill from off site meeting requirements of MDOT 703.18 for common borrow. The use of imported fill will be included incidental to any other work in this contract.

3. Stone Dust: A 150 mm deep course of stone dust shall be installed over an approved geotextile construction fabric in accordance with Standard Specifications Subsection 620.03. The Stone Dust Surface Course shall be mechanically compacted with cleanly defined mechanically installed edges as directed by the project Project Manager.

Method of Measurement: Stone Dust Surface Course will be measured by the square foot of the surface compacted in place.

Stone Dust: Metric Sieve Size	U.S. Size	Percent Passing
9.5mm	3/8”	100
4.75mm	#4	96-100
2.36mm	#8	60-75
1.18mm	#16	32-55
0.30mm	#50	8-28
0.15mm	#100	3-15
0.075mm	#200	2-8

F. 1. MDOT 703.14 Blotter (MDOT Brown Book, 1995). Aggregate for blotter shall consist of sharp durable particles of sand conforming to the following table

Sieve Designation		Percentage by Weight
Metric	English	Passing Square Mesh Sieve
19.0 mm	3/4 inch	100
4.75 mm	No.4	40 -100
425 μm	No.40	10 - 50
75 μm	No.200	0 - 5.0

The aggregate shall be free from vegetable and other deleterious material.

G. Gravel Aggregate Base:

1. MDOT2002 Green Book. Item 703.06 Aggregate for Base and subbase. Subsection b. Type D material. Aggregate shall be sand or gravel of hard durable particles free from vegetable matter, lumps or balls of clay and other deleterious substances. The gradation of the part that passes a 75 mm (3 in) sieve shall meet the grading requirements in the following table:

Sieve Designation		Percentage by Weight
Metric	English	Passing Square Mesh Sieve
6.3 mm	1/4 in	25 - 70
425 μm	No.40	0 - 30
75 μm	No.200	0 - 7.0

Aggregate shall not contain the particles of rock that will not pass the 150 mm (6 in) square mesh sieve.

PART 4 - EXECUTION

4.1 PREPARATION

A. Protect structures, utilities, sidewalks, pavements, and other facilities from damage caused by settlement, lateral movement, undermining, washout, and other hazards created by earthwork operations.

B. Protect and maintain erosion and sedimentation controls, which are specified in Division 2 Section "Site Clearing," during earthwork operations.

4.2 DEWATERING

A. Prevent surface water and ground water from entering excavations, from ponding on prepared subgrades, and from flooding Project site and surrounding area.

B. Protect subgrades from softening, undermining, washout, and damage by rain or water accumulation.

1. Reroute surface water runoff away from excavated areas. Do not allow water to accumulate in excavations. Do not use excavated trenches as temporary drainage ditches.
2. Install a dewatering system, specified in Division 2 Section "Dewatering," to keep subgrades dry and convey ground water away from excavations. Maintain until dewatering is no longer required.

4.3 EXCAVATION, GENERAL

a. Classified Excavation: Excavate to subgrade elevations incidental to construction.

4.4 EXCAVATION FOR STRUCTURES

A. Excavate to indicated elevations and dimensions within a tolerance of plus or minus 1 inch (25 mm). If applicable, extend excavations a sufficient distance from structures for placing and removing concrete formwork, for installing services and other construction, and for inspections.

1. Excavations for Footings and Foundations: Do not disturb bottom of excavation. Excavate by hand to final grade just before placing concrete reinforcement. Trim bottoms to required lines and grades to leave solid base to receive other work.
2. Excavation for Underground Tanks, Basins, and Mechanical or Electrical Utility Structures: Excavate to elevations and dimensions indicated within a tolerance of plus or minus 1 inch (25 mm). Do not disturb bottom of excavations intended as bearing surfaces.

4.5 EXCAVATION FOR WALKS AND PAVEMENTS

A. Excavate surfaces under walks and pavements to indicated lines, cross sections, elevations, and subgrades incidental to contract work.

4.6 SUBGRADE INSPECTION

A. If Project Manager determines that unsatisfactory soil is present, continue excavation and replace with compacted backfill or fill material as directed.

B. Authorized additional excavation and replacement material will be paid for according to Contract provisions for changes in the Work.

C. Reconstruct subgrades damaged by freezing temperatures, frost, rain, accumulated water, or construction activities, as directed by Project Manager, without additional compensation.

4.7 STORAGE OF SOIL MATERIALS

1. Stockpile soil materials away from edge of excavations. Do not store within drip line of remaining trees.

4.8 BACKFILL

A. Place and compact backfill in excavations promptly, but not before completing the following:

1. Construction below finish grade including, where applicable, subdrainage, dampproofing, waterproofing, and perimeter insulation.
2. Removing concrete formwork.
3. Removing trash and debris.
4. Removing temporary shoring and bracing, and sheeting.
5. Installing permanent or temporary horizontal bracing on horizontally supported walls. Place backfill on subgrades free of mud, frost, snow, or ice.

4.9 SOIL FILL

A. Plow, scarify, bench, or break up sloped surfaces steeper than 1 vertical to 4 horizontal so fill material will bond with existing material.

B. Place and compact fill material in layers to required elevations as follows:

1. Under grass and planted areas, use satisfactory soil material.
2. Under walks and pavements, use satisfactory soil material.
3. Under steps and ramps, use engineered fill.
4. Under building slabs, use engineered fill.
5. Under footings and foundations, use engineered fill.

C. Place soil fill on subgrades free of mud, frost, snow, or ice.

4.10 SOIL MOISTURE CONTROL

A. Uniformly moisten or aerate subgrade and each subsequent fill or backfill soil layer before compaction to within 2 percent of optimum moisture content.

1. Do not place backfill or fill soil material on surfaces that are muddy, frozen, or contain frost or ice.
2. Remove and replace, or scarify and air dry otherwise satisfactory soil material that exceeds optimum moisture content by 2 percent and is too wet to compact to specified dry unit weight.

4.11 COMPACTION OF SOIL BACKFILLS AND FILLS

A. Place backfill and fill soil materials in layers not more than 8 inches in loose depth for material compacted by heavy compaction equipment, and not more than 4 inches (100 mm) in loose depth for material compacted by hand-operated tampers.

B. Place backfill and fill soil materials evenly on all sides of structures to required elevations, and uniformly along the full length of each structure.

C. Compact soil materials to not less than the following percentages of maximum dry unit weight according to ASTM D 698:

1. Under structures, building slabs, steps, and pavements, scarify and re-compact top 12 inches (300 mm) of existing subgrade and each layer of backfill or fill soil material at 95 percent.
2. Under walkways, scarify and re-compact top 6 inches below subgrade and compact each layer of backfill or fill soil material at 95 percent.
3. Under lawn or unpaved areas, scarify and re-compact top 6 inches (150 mm) below subgrade and compact each layer of backfill or fill soil material at 85 precent.

4.12 GRADING

A. General: Uniformly grade areas to a smooth surface, free of irregular surface changes. Comply with compaction requirements and grade to cross sections, lines, and elevations indicated.

1. Provide a smooth transition between adjacent existing grades and new grades.
2. Cut out soft spots, fill low spots, and trim high spots to comply with required surface tolerances.

B. Site Grading: Slope grades to direct water away from buildings and to prevent ponding. Finish subgrades to required elevations within the following tolerances:

1. Lawn or Unpaved Areas: Plus or minus 1 inch.
2. Walks: Plus or minus 1 inch.
3. Pavements: Plus or minus 1/2 inch.

C. Grading inside Building Lines: Finish subgrade to a tolerance of 1/2 inch (13 mm) when tested with a 10-foot (3-m) straightedge.

4.13 SUBBASE AND BASE COURSES

A. Place subbase and base course on subgrades free of mud, frost, snow, or ice.

B. On prepared subgrade, place subbase and base course under pavements and walks as follows:

1. Place base course material over subbase course under hot-mix asphalt pavement.
2. Shape subbase and base course to required crown elevations and cross-slope grades.
3. Place subbase and base course 6 inches (150 mm) or less in compacted thickness in a single layer.
4. Place subbase and base course that exceeds 6 inches (150 mm) in compacted thickness in layers of equal thickness, with no compacted layer more than 6 inches (150 mm) thick or less than 3 inches (75 mm) thick.
5. Compact subbase and base course at optimum moisture content to required grades, lines, cross sections, and thickness to not less than [95] percent of maximum dry unit weight according to ASTM D 698

END OF SECTION

SECTION 02540 – VAULT TOILET TANK AND ACCESSORIES

PART 1 - GENERAL

A. This Section includes the following:

1. Polyethylene Underground vaults with integral center support column, 24”clean out, 12” vent and oblong toilet risers.
2. Kick proof wall vents
3. Handicap toilet riser w seat and lid
4. 12” polyethylene vent pipe
5. Toilet paper dispensers
6. Grab bars
7. Door, frame and hardware assemblies
8. Lexan windows
9. floor drains
10. Coat Hook
11. Hand Sanitizer Unit
12. DEFINITIONS

B. ABS: Acrylonitrile-butadiene-styrene plastic.

C. FRP: Fiberglass-reinforced plastic.

D. HDPE: High-density-polyethylene plastic.

E. PE: Polyethylene plastic.

F. PVC: Polyvinyl chloride plastic.

1.2 SUBMITTALS

A. Product Data: For the following:

1. Polyethylene Underground vaults with integral center support column, 24”clean out, 12” vent and oblong toilet risers.
2. Kick proof wall vents
3. Handicap toilet riser
4. 12’ ABS vent pipe
5. Toilet paper dispensers
6. Grab Bars
7. Door, frame and hardware assemblies
8. Lexan window assemblies
9. floor drains
10. Coat Hook
11. Hand Sanitizer Unit

B. Shop Drawings: Include manhole openings, covers, pipe connections, and accessories for the following:

1. Polyethylene tanks.

1.3 QUALITY ASSURANCE

A. Product Options: Drawings indicate size, profiles, and dimensional requirements of septic tank system and are based on the specific system indicated. Refer to Division 1 Section "Product Requirements."

PART 2 - PRODUCTS

2.1 MANUFACTURERS

A. In other Part 2 articles where titles below introduce lists, the following requirements apply to product selection:

1. Available Manufacturers: Subject to compliance with requirements, manufacturers offering products that may be incorporated into the Work include, but are not limited to, manufacturers specified.

2.2 POLYETHYLENE TANK

A. Reinforced Polyethylene vault:

B. Capacity and Characteristics:

1. Capacity: 1000 Gallon.
2. Characteristics: Single-chamber, molded one piece design, fabricated for waterless septic tank application. The tank shall have an integral center support column. Tank shall be equal to Romtec 1000 gallon cross-linked polyethylene underground vault, as manufactured by Romtec, Inc. 18240 North Bank Road, Roseburg, Oregon 97470 (www.romtec.com)

a.

	ASTM test	Value
Density	D- 1505-85	0.944 g/cm3
Tensile strength	DE638-84	3000psi
Environ. Stress crack resistance	D1693-70	>1000 hrs.

C. Accessories:

1. Adaptor kit for; vent riser, clean out riser and cover, toilet riser.
2. 36” and 42” Stainless steel grab bars equal to those listed as accessories by Romtec Inc.
3. 3 roll stainless steel, restricted roll toilet paper dispensers equal to those listed as accessories by Romtec Inc. (See Individual Privy Site Notes for Quantity)
4. Coat Hook shall be Bradley model #9119 Robe Hook or approved equal

5. Hand Sanitizer Unit shall be GOJO 212006 Purell NXT Wall-Mount Dispenser, 1000mL screw mounted or approved equal.
6.

2.3 TOILET RISER, SEAT, AND LID

1. White cross-linked polyethylene riser. Polystyrene seat and lid. Stainless steel hardware. Handicap riser shall be 18” high and the standard shall be 15” high.
2. Toilet riser and appurtences shall be manufactured by Romtec, Inc., or approved equal.

2.4 DOOR, FRAME AND HARDWARE

1. Heavy-duty steel 6 panel doors and frames as manufactured by Steelcraft or approved equal.
   a. Door model E21 6 panel door CE-16 series Heavy duty Commercial door made of 16 Ga. Galvannealed steel panel with 14 Ga. Reinforcement channels at the top and bottom and 7 Ga. Steel reinforcement at the hinges.
   b. Size: 3’-0” x 7’-0”
   c. Do not prep the door for a lock set.
2. Heavy duty F series frame made of 14ga. Galvannealed steel with 7 Ga. Steel reinforcement at the hinges do not prep the frame for a lock set, manufacturer to match door manufacturer.

A. Hardware:
   1. Hinges: 1-1/2 Pr of hinges per door, Heavy weight 4-1/2” hinges with non removable pins (provide set screw in hinge barrel that when tightened into a grove in the hinge pin, and prevents removal of the pin while the door is closed. Hinges shall be equal to Stanley FBB 179- 4 ½” with a 32D finish..
   2. Dead bolt: equal to Stanley 1088 surface mounted dead bolt with a 1/2” x 5/8” X 6 1/2” bolt. Mount to door with tamper resistant through bolts at height to meet ADA requirements.
   3. 1” diameter solid stainless steel round bar 10” center to center with a projection of 2-1/2” and a 1-1/2” clearance. Mount to door with tamper resistant through bolts, mount to meet ADA requirements.

2.5 LEXAN WINDOWS

1. Lexan windows and frames, standard 34” x 10 “depth to suit wall framing.

2.6 FLOOR DRAINS

A. Floor Drains,: Comply with ASME A112.21.1M.

B. Manufacturers

   1. Smith, Jay R. Mfg. Co.
   2. Zurn Industries, Inc., Specification Drainage Operation
   3. Zurn Industries, Inc., Jonespec Div

4. Josam Co.
5. Watts Industries, Inc., Drainage Products Div.

C. Privy Floor Drains: Equal to Smith No. 2010(-A) cast iron drain and flashing collar with adjustable 5" diameter adjustable nickel bronze top.

1. Field drill tank tapping.

2.7 LOUVERS

A. Provide sidewall louvers by Romtec. Kick proof Louvers shall be 18 ¼”x 22 ¾” x 2” and shall provide 111 sq. in. free area, minimum. Louver shall incorporate a 1/8” black steel frame and expanded mesh welded to galvanized louvers with fine mesh screen.

2.8 POLYETHYLENE VENT PIPE

A. Provide 12" diameter polyethylene vent pipes as manufactured by Romtec Inc. Vent pipes shall extend a minimum of 3’ above the highest point of the roof.

2.9 PIPES AND FITTIINGS

A. Refer to Part 3 "Piping Applications" Article for identification of systems where piping materials specified below are used.

B. Sewer Pipe and Fittings: PVC, complying with ASTM D 3034, SDR 35, nonperforated, for solvent-cement or elastomeric gasket joints.

1. Solvent Cement: ASTM D 2564.
2. Gaskets: ASTM F 477, elastomeric seal.

PART 3 - EXECUTION

3.1 EXAMINATION

A. Examine areas and conditions for compliance with requirements and other conditions affecting performance of vault system.

B. Verify compatibility with and suitability of soil structure and materials.

C. Proceed with installation only after unsatisfactory conditions have been corrected.

3.2 EARTHWORK

A. Excavating, trenching, and backfilling are specified in Division 2 Section "Earthwork."

3.3 POLYETHYLENE TANK INSTALLATION

A. Install Reinforced Polyethylene vault as specified below:

1. Follow manufactures direction for vault installation with the exception of size of vault pit and the need to backfill with concrete. Excavate the hole for the vault only big enough to install the tank and afford enough room to place and compact the back fill around it. Backfill using Structural fill as defined in section 02300 Earthwork.

3.4 PIPING INSTALLATION

A. Install piping according to the following:

1. PVC Sewer Pipe and Fittings: ASTM D 2321.

3.5 PIPE JOINT CONSTRUCTION

A. Basic piping joint construction is specified in Division 2 Section "Piped Utilities - Basic Materials and Methods." Where specific joint construction is not indicated, follow piping manufacturer's written instructions.

3.6 FLOOR DRAINS

A. Install floor drains at low points of surface areas to be drained. Set grates of drains flush with finished floor, unless otherwise indicated.

1. Position floor drains for easy access and maintenance.
2. Set floor drains below elevation of surrounding finished floor to allow floor drainage. Set with grates depressed according to the following:

   a. 1/4-inch per foot.

3. Field drill a hole in the top of the tank as required for installation of the drain pipe.

3.7 CONNECTIONS

A. Piping installation requirements are specified in other Division 2 Sections. Drawings indicate general arrangement of piping, fittings, and specialties.

END OF SECTION

SECTION 02930 - LANDSCAPING

PART 1 - GENERAL

1.1 RELATED DOCUMENTS

A. The more stringent of the following provisions shall prevail:
   1. Drawings and general provisions of the Contract, including General and Supplementary Conditions and other Division 1 Specification Sections, apply to this Section.
   2. State of Maine Department of Transportation, “Standard Specifications for Highways and Bridges,” Revision 2002, apply to this Section.

1.2 SUMMARY

A. This Section includes the following:
   1. Ground cover (erosion control Mulch).
   2. Stone dust walks.

B. Related Sections include the following:

   1. MDOT “STANDARD SPECIFICATION” Section 621- Landscaping for seed types

   2. Division 2 Section "Site Clearing" for protection of existing trees and planting, topsoil stripping and stockpiling, and site clearing.
   3. Division 2 Section "Earthwork" for excavation, filling, and rough grading and for subsurface aggregate drainage and drainage backfill materials.

1.3 DEFINITIONS

A. Finish Grade: Elevation of finished surface of planting soil.

B. Manufactured Topsoil: Soil produced off-site by homogeneously blending mineral soils or sand with stabilized organic soil amendments to produce topsoil or planting soil.

C. Planting Soil: Native or imported topsoil, manufactured topsoil, or surface soil modified to become topsoil; mixed with soil amendments.

D. Subgrade: Surface or elevation of subsoil remaining after completing excavation, or top surface of a fill or backfill, before placing planting soil.

E. Erosion control mulch: Coarse organic bark mix used to filter turbid water and provide erosion resistance in sensitive areas.

1.4 SUBMITTALS

A. Product Data: For each type of product indicated.

B. Samples for Verification: For each of the following:

1. Erosion control mix: supply 5 lb of erosion control mulch, in a labeled plastic bag.

2. Bark Mulch: supply 5 lb of bark mulch, in a labeled plastic bag.

3. Stone Dust: supply 2 lb of stone dust, in a labeled plastic bag.

PART 2 - PRODUCTS

PART 3 - Add requirements for other types of trees classified in ANSI Z60.1. Examples include palms, specimen trees, and trees for special uses such as cut back or sheared and topiary. Add distinguishing characteristics for each type of tree.

3.1 TOPSOIL

A. Loam: MDOT 615, pH range of 5.5 to 8, a minimum of 10 to 20 percent organic material content; free of stones 1 inch (25 mm) or larger in any dimension and other extraneous materials.

1. Topsoil Source: Reuse surface soil stockpiled on-site. Verify suitability of stockpiled surface soil to produce topsoil. Clean surface soil of roots, plants, sod, stones, clay lumps, and other extraneous materials harmful to plant growth.

a. Supplement with imported or manufactured loam from off-site sources when quantities are insufficient. Obtain topsoil displaced from naturally well-drained construction or mining sites where topsoil occurs at least 4 inches deep; do not obtain from bogs or marshes.

3.2 MULCHES

A. Erosion Control Mulch: MaineDOT Section 619 – Mulch shall apply. Erosion control mix shall meet MDOT 717.04 (d) standards.

Erosion control mix shall be an organic substance of source separated materials, separated at the point of waste generation, that may include: forest residues, bark, paper mill flume grit, stump grindings and aged wood waste. Erosion control mix shall be free of refuse, physical contaminants, material toxic to plant growth, and reprocessed wood products. Erosion control mix may contain rocks less than 100 mm (4 in.) in diameter and shall be a well graded material conforming to the following:

1. pH between 5.0 – 8.0; particle size (by weight)
2. Particle size (by weight):
   a.)100 passing a 150 mm (6 in.)screen
   b.) 75 – 85 % passing a 19 mm (0.75 in) screen
3. Soluble salts content <4.0 mmhos/cm
4. Organic matter 20 to 100%, dry weight basis

B. Bark Mulch: MaineDOT Section 619 – Mulch shall apply. Bark Mulch shall meet MDOT 717.04 (c) standards.

Bark mulch shall consist of soft wood bark fragments that have been aged for at least 6 months. Bark mulch shall be free of refuse, physical contaminants, material toxic to plant growth, and reprocessed wood products. Bark mulch shall be a well-graded material conforming to the following.

1. pH between 4.0 – 8.0
2. Particle size 100% passing a 50 mm [2 inch] screen.
3. Soluble salts content < 4.0 mmhos/cm

EXECUTION

A. Refer to individual privy placement notes and provide erosion-control measures to prevent erosion or displacement of soils and discharge of soil-bearing water runoff or airborne dust to adjacent properties and walkways.

3.3 CLEANUP AND PROTECTION

3.4 DISPOSAL

A. Disposal: Remove surplus soil and waste material, including excess subsoil, unsuitable soil, trash, and debris, and legally dispose of them off Owner's property.

END OF SECTION

SECTION 03300 – CAST-IN-PLACE CONCRETE

PART 1 - GENERAL

PART 2 - SUMMARY

A. This Section specifies cast-in place concrete, including formwork, reinforcement, concrete materials, mix design, placement procedures, and finishes.

B. Related Sections include the following:

1. Division 2 Section "Earthwork" for drainage fill under slabs-on-grade.

2.2 DEFINITIONS

A. Cementitious Materials: Portland cement alone or in combination with one or more of blended hydraulic cement, fly ash and other pozzolans, ground granulated blast-furnace slag, and silica fume.

2.3 REFERENCES

A. American Concrete Institute (ACI):

1. 117 - Specifications for Tolerances for Concrete Construction and Materials
2. 301 - Specifications for Structural Concrete for Buildings
3. 305R - Hot Weather Concreting
4. 306R - Cold Weather Concreting
5. 309R - Guide for Consolidation of Concrete
6. 315 - Manual of Standard Practice for Detailing Reinforced Concrete
7. 347 - Recommended Practice for Concrete Formwork
8. 318 - Building Code Requirements for Reinforced Concrete

B. American Society for Testing and Materials (ASTM):

1. A 185 - Welded Steel Wire Fabric for Concrete Reinforcement
2. A 615 - Deformed and Plain Billet-Steel Bars for Concrete Reinforcement
3. C 33 - Concrete Aggregate
4. C 39 - Compressive Strength of Cylindrical Concrete Specimens
5. C 94 - Ready-Mixed Cement
6. C 150 - Portland Cement
7. C 260 - Air-Entraining Admixtures for Concrete
8. C 309 - Liquid Membrane-Forming Compounds for Curing Concrete
9. C 494 - Chemical Admixtures for Concrete

C. Federal Specifications (FS):

1. TT-C-800 - Curing Compound, Concrete, for New and Existing Surfaces

D. Concrete Reinforcing Steel Institute (CRSI):

1. CRSI - Manual of Standard Practice and Recommended Practice for Placing Reinforcing Bars (MSP-latest edition)

E. American Welding Society (AWS)

F. Scaffolding and Shoring Institute (SSI):

1. Scaffolding and Shoring Safety Rules

2.4 SUBMITTALS

A. Product Data: For each type of manufactured material and product indicated.

B. Design Mixes: For each concrete mix. Include alternate mix designs when characteristics of materials, project conditions, weather, test results, or other circumstances warrant adjustments.

1. Provide cement manufacturer's letter of certification and chemical content test results stating that the Portland cement is in compliance with ASTM designation C 150.
2. Indicate amounts of mix water to be withheld for later addition at Project site.

C. Material Certificates: Signed by manufacturers certifying that each of the following items complies with requirements:

1. Cementitious materials and aggregates.
2. Steel reinforcement and reinforcement accessories.
3. Admixtures.
4. Waterstops.
5. Curing materials.
6. Floor and slab treatments.
7. Adhesives.
8. Epoxy joint filler.
9. Repair materials.

2.5 QUALITY ASSURANCE

A. Installer Qualifications: An experienced installer who has completed concrete Work similar in material, design, and extent to that indicated for this Project and whose work has resulted in construction with a record of successful in-service performance.

1. Flatwork (interior and exterior slabs) shall be placed, finished and cured under the direct supervision of a concrete technician with 2 years experience and that has placed and finished not less than 10,000 square feet of concrete slabs.

B. Manufacturer Qualifications: A firm experienced in manufacturing ready-mixed concrete products complying with ASTM C 94 requirements for production facilities and equipment.

1. Manufacturer must be certified according to the Department of Transportation’s “Certificate of Ready Mixed Concrete Production Facilities”.

2. Owner shall provide all concrete material testing and concrete cylinder samples for this project. Contractor shall coordinate schedule of installations with the Owner to allow ample time for the owner to schedule appropriate testing.

C. Source Limitations: Obtain each type or class of cementitious material of the same brand from the same manufacturer's plant, each aggregate from one source, and each admixture from the same manufacturer.

D. ACI Publications: Comply with the following, unless more stringent provisions are indicated:

1. ACI 301, "Specification for Structural Concrete."
2. ACI 117, "Specifications for Tolerances for Concrete Construction and Materials."

E. Preinstallation Conference: Conduct conference at Project site to comply with requirements in Division 1 Section "Project Meetings."

1. Flatwork (interior and exterior slabs) Preinstallation Conference: Conduct conference at Project site to review all details and requirements for the batching, mixing, transporting, placing, finishing, and curing all interior and exterior flatwork operations. Require representatives of each entity directly concerned with flatwork operation to attend, including the following:

a. Contractor and Contractor's superintendent.
b. Flatwork subcontractors.
c. Project Manager.
d. Maine Department of Transportation’s representative.

2.6 DELIVERY, STORAGE, AND HANDLING

A. Deliver, store, and handle steel reinforcement to prevent bending and damage.

PART 3 - PRODUCTS

3.1 FORM-FACING MATERIALS

A. Smooth-Formed Finished Concrete: Form-facing panels that will provide continuous, true, and smooth concrete surfaces. Furnish in largest practicable sizes to minimize number of joints.

1. Exterior-grade plywood panels, suitable for concrete forms, complying with DOC PS 1, and as follows:

a. High-density overlay, Class 1, or better.
b. Medium-density overlay, Class 1, or better, mill-release agent treated and edge sealed.
c. Structural 1, B-B, or better, mill oiled and edge sealed.
d. B-B (Concrete Form), Class 1, or better, mill oiled and edge sealed.

2. Manufactured forming system: metal or other panel system with prior review and approval.

B. Rough-Formed Finished Concrete: Plywood, lumber, metal, or another approved material. Provide lumber dressed on at least two edges and one side for tight fit.

C. Chamfer Strips: Wood, metal, PVC, or rubber strips, 3/4 by 3/4 inch (19 by 19 mm), minimum.

D. Form-Release Agent: Commercially formulated form-release agent that will not bond with, stain, or adversely affect concrete surfaces and will not impair subsequent treatments of concrete surfaces.

1. Formulate form-release agent with rust inhibitor for steel form-facing materials.

E. Form Ties: Factory-fabricated, removable or snap-off metal or glass-fiber-reinforced plastic form ties designed to resist lateral pressure of fresh concrete on forms and to prevent spalling of concrete on removal.

1. Furnish units that will leave no corrodible metal closer than 1 inch (25 mm) to the plane of the exposed concrete surface.

3.2 STEEL REINFORCEMENT

A. Reinforcing Bars: ASTM A 615/A 615M, Grade 60 (Grade 420), deformed.

1. Bars shall be clean and free from rust, scale or coatings that will reduce bond. Reinforcing steel shall be capable of bending 180 degrees and rebending to original shape without fracture.

B. Plain-Steel Wire: ASTM A 82, as drawn.

3.3 REINFORCEMENT ACCESSORIES

A. Bar Supports: Bolsters, chairs, spacers, and other devices for spacing, supporting, and fastening reinforcing bars and welded wire fabric in place. Manufacture bar supports according to CRSI's "Manual of Standard Practice" from steel wire, plastic, or fiber-reinforced concrete of greater compressive strength than concrete.

B. Joint Dowel Bars: Plain-steel bars, ASTM A 615/A 615M, Grade 60 (Grade 420). Cut bars true to length with ends square and free of burrs.

3.4 CONCRETE MATERIALS

A. Portland Cement: ASTM C 150, Type II.

B. Normal-Weight Aggregate: ASTM C 33, uniformly graded, and as follows:

1. Nominal Maximum Aggregate Size: 3/4 inch (19 mm).

C. Water: Potable and complying with ASTM C 94.

3.5 ADMIXTURES

A. General: Admixtures certified by manufacturer to contain not more than 0.1 percent water-soluble chloride ions by mass of cementitious material and to be compatible with other admixtures and cementitious materials. Do not use admixtures containing calcium chloride.

B. Air-Entraining Admixture: ASTM C 260. Sika AER by the Sika Chemical Corp. or approved equal.

C. Water-Reducing Admixture: ASTM C 494, Type A. Eucon W12-75 by the Euclid Chemical Corp. “Pozzolith 200N by Master Builders “Plastocrete 161” by the Sika Chemical Corp. or approved equal.

D. Non-Corrosive Accelerator: ASTM C 494, Type C or E, Accelguard 80 by the Euclid Chemical Co. or "Polar Set" by W. R. Grace and Co. or approved equal.

a. Non –corrosive accelerator shall have long-term test data proving its non-corrosive effect on reinforcing steel.

3.6 2.9 CURING MATERIALS

A. Water: Clean and Potable.

B. Curing Compound (Exterior Concrete Application): Conform to method of ASTM C 156 for compliance with ASTM C 309, non-coloring, non-staining, curing compound. Curing compound shall be SpecSeal AC 1315 as manufactured by PROSOCO, Inc. or approved equal.

C. Waterproof Paper for Curing and Protection (Interior Non-Exposed Concrete): Conform to ASTM C 171, Type I. Paper shall be lapped and seams taped with reinforced tape, orange label Sisalcraft, Floor Cure Wet Strength by Glas-Kraft, Inc., or approved equal.

3.7 RELATED MATERIALS

A. Doweling Adhesive: A two-component, vinylester blend resin equal to HI HY150 adhesive as manufactured by Hilti Fastening Systems, Tulsa, Oklahoma or approved equal.

B. Non-Shrink Grout: Premixed compound with non-metallic aggregate, cement, water-reducing and plasticizing agents capable of minimum compression strength of 2,400 lbs. Non-shrink grout shall be "Eucon N-S" (non-metallic) by the Euclid Chemical Co., "Masterflow 713" (non-metallic) by Master Builders, Five Star Grout by U.S. Grout Corp., or approved equal.

3.8 REPAIR MATERIALS

A. Slurry: Slurry shall consist of the same proportions of cement to fine aggregates used in the regular concrete mix (coarse aggregate only omitted) and shall be well mixed with such amount of water as will produce a thick consistency.

B. Dry Pack: Dry pack for cosmetic concrete repairs only shall consist of one part cement to 2-1/2 parts fine aggregate (screen out all materials retained on No. 4 sieve), mixed with a minimum

amount of water, in small amounts. The consistency shall be such that when a ball of the mixture is compressed in the hand it will maintain its shape, showing finger marks, but without showing any surface water.

C. Repair Underlayment: Cement-based, polymer-modified, self-leveling product that can be applied in thicknesses from 1/8 inch (3.2 mm) and that can be feathered at edges to match adjacent floor elevations.

1. Cement Binder: ASTM C 150, portland cement or hydraulic or blended hydraulic cement as defined in ASTM C 219.
2. Primer: Product of underlayment manufacturer recommended for substrate, conditions, and application.
3. Aggregate: Well-graded, washed gravel, 1/8 to 1/4 inch (3 to 6 mm) or coarse sand as recommended by underlayment manufacturer.
4. Compressive Strength: Not less than 4100 psi (29 MPa) at 28 days when tested according to ASTM C 109/C 109M.

D. Repair Topping: Traffic-bearing, cement-based, polymer-modified, self-leveling product that can be applied in thicknesses from 1/4 inch (6 mm).

1. Cement Binder: ASTM C 150, portland cement or hydraulic or blended hydraulic cement as defined in ASTM C 219.
2. Primer: Product of topping manufacturer recommended for substrate, conditions, and application.
3. Aggregate: Well-graded, washed gravel, 1/8 to 1/4 inch (3 to 6 mm) or coarse sand as recommended by topping manufacturer.
4. Compressive Strength: Not less than 5700 psi (39 MPa) at 28 days when tested according to ASTM C 109/C 109M.

3.9 CONCRETE MIXES

A. Prepare design mixes for each type and strength of concrete determined by either laboratory trial mix or field test data bases, as follows:

1. Proportion normal-weight concrete according to ACI 211.1 and ACI 301.

B. Use a qualified independent testing agency for preparing and reporting proposed mix designs for the laboratory trial mix basis.

C. Table for Working Stress Concrete:

USE	STRENGTH 28 DAYS	MAXIMUM SIZE COARSE AGGREGATE	CEMENT MAXIMUM SLUMP AT PLACEMENT	WEIGHT OF CEMENT	TYPE OF CEMENT	WATER-CEMENT RATIO
Privy Floor Slab & Curbs	4000#/sq. in.	3/4"	4"	611#	II	0.55

D. All concrete shall contain the specified water-reducing admixture. All slabs placed below 50 degrees F shall contain the specified non-corrosive accelerator. All exterior concrete shall contain an approved air-entraining admixture.

E. All exterior concrete shall have an air content of five percent to seven percent.

F. All exterior concrete subjected to freezing and thawing shall have a maximum water-cement ratio of 0.53. All concrete subjected to deicers shall have a maximum water-cement ratio of 0.45.

G. All mix design, batching, placing, finishing, curing, joint sealing and patching of color conditioned concrete shall be in strict accordance with the manufacturers recommendations

H. Air Content: Add air-entraining admixture at manufacturer's prescribed rate to result in concrete at point of placement having an air content as follows within a tolerance of plus 1 or minus 1.5 percent, unless otherwise indicated:

1. Air Content: 6 percent for 3/4-inch- (19-mm-) nominal maximum aggregate size.

I. Limit water-soluble, chloride-ion content in hardened concrete to 0.15 percent by weight of cement.

J. Admixtures: Use admixtures according to manufacturer's written instructions.

1. Use water-reducing admixture in concrete, as required, for placement and workability.
2. Use water-reducing and retarding admixture when required by high temperatures, low humidity, or other adverse placement conditions.

3.10 FABRICATING REINFORCEMENT

A. Fabricate steel reinforcement according to CRSI's "Manual of Standard Practice."

3.11 CONCRETE MIXING

A. Ready-Mixed Concrete: Measure, batch, mix, and deliver concrete according to ASTM C 94, and furnish batch ticket information.

B. Ready-Mixed Concrete: Measure, batch, mix, and deliver concrete according to ASTM C 94 and ASTM C 1116, and furnish batch ticket information (floor slabs only).

PART 4 - EXECUTION

4.1 FORMWORK

A. Design, erect, shore, brace, and maintain formwork, according to ACI 301, to support vertical, lateral, static, and dynamic loads, and construction loads that might be applied, until concrete structure can support such loads.

1. Construct formwork so concrete members and structures are of size, shape, alignment, elevation, and position indicated, within tolerance limits of ACI 117. Excessive deflection of forms after concrete is poured shall be sufficient cause for rejection of that portion of concrete and formwork. Excessive deflection will be considered to be that which will produce visible and noticeable waves in the finished concrete.
2. Construct forms so that walls will key into each other at ends unless poured monolithically.

B. Limit concrete surface irregularities, designated by ACI 347R as abrupt or gradual, as follows:

1. Class A, 1/8 inch (3 mm). (Exposed concrete)
2. Class B, 1/4 inch (6 mm). (Non-exposed concrete)

C. Construct forms tight enough to prevent loss of concrete mortar.

D. All possible care shall be taken in the formwork to produce surfaces free from honeycomb or other defects.

E. Fabricate forms for easy removal without hammering or prying against concrete surfaces. Provide crush or wrecking plates where stripping may damage cast concrete surfaces. Provide top forms for inclined surfaces steeper than 1.5 horizontal to 1 vertical. Kerf wood inserts for forming keyways, reglets, recesses, and the like, for easy removal.

1. Do not use rust-stained steel form-facing material.

F. Set edge forms, bulkheads, and intermediate screed strips for slabs to achieve required elevations and slopes in finished concrete surfaces. Provide and secure units to support screed strips; use strike-off templates or compacting-type screeds.

G. Schedule the work and notify other trades in time so that provisions for their work in the formwork can be made without delaying progress of the project. Verify that all sleeves, pipes, etc., for electrical, plumbing, heating and ventilation, or other work are installed.

H. Chamfer exterior corners and edges of permanently exposed concrete, where indicated on drawings.

I. Form openings, chases, offsets, sinkages, keyways, reglets, blocking, screeds, and bulkheads required in the Work. Determine sizes and locations from trades providing such items.

J. Clean forms and adjacent surfaces to receive concrete. Remove chips, wood, sawdust, dirt, and other debris just before placing concrete.

K. Bolts, rods or other approved devices shall be used for internal ties. They shall be so arranged that when the forms are removed, no metal shall be within 1" of any surface.

L. Retighten forms and bracing before placing concrete, as required, to prevent mortar leaks and maintain proper alignment.

M. Coat contact surfaces of forms with form-release agent, according to manufacturer's written instructions, before placing reinforcement.

4.2 EMBEDDED ITEMS

A. Place and secure anchorage devices and other embedded items required for adjoining work that is attached to or supported by cast-in-place concrete. Use Setting Drawings, templates, diagrams, instructions, and directions furnished with items to be embedded.

1. Secure information about and provide for all openings, offsets, recessed nailing blocks, channel chases, anchors, ties, inserts, etc., in the formwork before concrete is poured.
2. Install anchor bolts, accurately located, to elevations required.

    a. The setting of all anchor bolts and the grouting for all structural steel base plates shall be included as part of this contract. Bolts and base plates will be furnished under Section 05500 - Metal Fabrications, and Section 13125 – Metal Building Systems.
    b. All column base plates, equipment bases, and other locations noted in the structural drawings shall be grouted with the specified non-shrink grout. All exposed grout shall be the specified non-metallic type.

4.3 REMOVING AND REUSING FORMS

A. General: Formwork that does not support weight of concrete may be removed after cumulatively curing at not less than 50 deg F (10 deg C) for 24 hours after placing concrete provided concrete is hard enough to not be damaged by form-removal operations and provided curing and protection operations are maintained.

B. Clean and repair surfaces of forms to be reused in the Work. Split, frayed, delaminated, or otherwise damaged form-facing material will not be acceptable for exposed surfaces. Apply new form-release agent.

C. When forms are reused, clean surfaces, remove fins and laitance, and tighten to close joints. Align and secure joints to avoid offsets. Do not use patched forms for exposed concrete surfaces unless approved by Project Manager.

4.4 STEEL REINFORCEMENT

A. General: Comply with CRSI's "Manual of Standard Practice" for placing reinforcement.

1. All steel bars and wire shall be of size, gauge and length indicated, accurately bent or formed to shapes detailed or scheduled by experienced shops using methods that will not injure the materials.
2. Steel reinforcing shall not be bent in a manner that will injure the material or the embedding concrete. Bars with kinks or bends not shown on the plans shall not be used. Heating of reinforcement for bending will not be permitted. Bars shall be bent once only (no rebending or straightening allowed) unless shown as such on the drawings.
3. All details of reinforcement not shown or indicated on the drawings or specifically called for in the specifications shall conform to ACI 315.
4. Lap all bars at splices, corners and intersections a minimum of 36 bar diameters unless otherwise indicated.

5. All intersecting concrete walls shall be tied with #4L bars 3'-0" long, bent 18" x 18" spaced 12" on center, outside face only unless otherwise indicated.
6. Splices of reinforcement shall not be made at points of maximum stress. Splice lengths shall be a minimum of 36 bar diameters unless otherwise indicated and shall provide sufficient lap to transfer the stress between bars by bond and shear. Stagger splices of adjacent bars where possible. All splices and laps at corners and intersections shall be tied with wire at each end.
7. Where obstructions (pipes, conduit, ducts, etc.) prevent the intended placement of reinforcing, provide additional reinforcing as directed by the Project Manager or his Representative around the obstruction to match that reinforcing interrupted.
8. Provide additional stirrups, ties, trim bars, etc., as directed around all openings, sleeves, pipes, and conduits, which pass through structural elements.
9. Do not cut or puncture vapor retarder. Repair damage and reseal vapor retarder before placing concrete.

B. Clean reinforcement of loose rust and mill scale, earth, ice, and other foreign materials.Accurately position, support, and secure reinforcement against displacement. Locate and support reinforcement with bar supports to maintain minimum concrete cover. Do not tack weld crossing reinforcing bars.

1. Coverage of bars (including stirrups and column ties) shall, unless otherwise shown, be as follows:

Slabs (on grade):	2" soil face, 1-1/2" top face
Walls/curbs:	2" clear to form at exterior

2. Misplaced Reinforcing: If any reinforcing bars are found to be misplaced after concrete has been placed, the Project Manager shall be notified immediately and no correction or cutting shall be made without his direction. Misplaced bars shall not be bent or kinked. Any redesign and/or reinforcing required because of misplaced bars shall be at the Contractor's expense.
3. All reinforcing shall be kept separate from soil, pipe, conduit ducts, etc., by approved non-metallic separators.
4. Reinforcement shall not have welded joints unless indicated on the drawings or unless prior approval has been given by the Project Manager. Welding shall conform to the requirements of the American Welding Society Structural Welding Code for reinforcing steel D1.4. Field welding shall be performed by AWS certified welders.
5. Shop- or field-weld reinforcement according to AWS D1.4, where indicated.

D. Set wire ties with ends directed into concrete, not toward exposed concrete surfaces.

4.5 JOINTS

A. General: on this project no construction joints or control joints are required.

B. Dowel Joints: Install dowel sleeves and dowels or dowel bar and support assemblies at joints where indicated.

4.6 MIXING CONCRETE

A. General: The concrete shall be mixed in the quantities required for immediate use, and any which has developed initial set or exceed the time limit of ASTM C 94 shall not be used. No retempering of mortar or concrete shall be allowed under any circumstances. Concrete shall be proportioned, mixed and placed only in the presence of the Project Manager or his Authorized Representative. The Contractor shall give ample notice to the Project Manager before mixing is commenced. Aggregate size will be adjusted to suit conditions of work. Pumping of concrete shall be permitted only after approval by the Engineer of the Pumping Contractor and the pumping equipment and method to be employed. The Project Manager shall be notified of dates when pumping of concrete shall be performed to permit his on-the-job inspection of the operations.

B. Final proportions shall be in accordance with approved mix designs. Adjustments to approved proportions, for whatever reason, shall be approved by the Project Manager.

4.7 CONCRETE PLACEMENT

A. Before placing concrete, verify that installation of formwork, reinforcement, and embedded items is complete and that required inspections have been performed.

B. Remove loose dirt, mud, standing water, and foreign matter from excavations or from cavities.

C. Thoroughly clean reinforcement and other embedded items free from loose rust and other matter. Assure reinforcing is held securely in place.

D. Thoroughly wet wood forms (except coated plywood), bottom and sides of trenches, base underslab, and adjacent concrete or masonry at least one hour in advance of placing concrete; securely close cleanout and inspection ports; repeat wetting as necessary to keep forms damp.

E. Equipment shall be maintained clean and of sufficient quantity and capacity to efficiently execute the work required.

F. Do not add water to concrete during delivery, at Project site, or during placement, unless approved by Project Manager.

G. Before placing concrete, water may be added at Project site, subject to limitations of ACI 301.

H. Deposit concrete continuously or in layers of such thickness that no new concrete will be placed on concrete that has hardened enough to cause seams or planes of weakness. If a section cannot be placed continuously, provide construction joints as specified. Deposit concrete to avoid segregation.

I. Deposit concrete in forms in horizontal layers no deeper than 24 inches (600 mm) and in a manner to avoid inclined construction joints. Place each layer while preceding layer is still plastic, to avoid cold joints.

1. Consolidate placed concrete with mechanical vibrating equipment. Use equipment and procedures for consolidating concrete recommended by ACI 309R.

a. concrete shall be vibrated into final position in forms with an internal type vibrating machine. The vibration shall have a frequency of not less than 8,000

vibrations per minute. The mechanical vibrating equipment shall be satisfactory to the Project Manager.

b. The vibration shall be of sufficient intensity and duration to cause flow or settlement of the concrete and complete consolidation. Over vibration, especially of mixtures that are too wet, may cause segregation and will be avoided. A sufficient number of vibrators shall be provided to permit consolidation of each batch before the next batch is delivered and without delaying the delivery.

c. The vibrations shall be applied directly to the concrete, and vibration through the forms shall not be permitted. Vibration shall be applied at the point of deposit and in the area of freshly deposited concrete. The concrete shall be placed in layers of uniform thickness

2. Do not use vibrators to transport concrete inside forms. Insert and withdraw vibrators vertically at uniformly spaced locations no farther than the visible effectiveness of the vibrator. Place vibrators to rapidly penetrate placed layer and at least 6 inches (150 mm) into preceding layer. Do not insert vibrators into lower layers of concrete that have begun to lose plasticity. At each insertion, limit duration of vibration to time necessary to consolidate concrete and complete embedment of reinforcement and other embedded items without causing mix constituents to segregate.
3. When conditions make puddling difficult, or where the reinforcement is congested, batches of mortar containing the same proportions of cement to sand used in the concrete shall be deposited in the forms. The operation of filling with the regularly specified mix shall be carried on at such a rate that the mix is at all times plastic and flows readily into the spaces between the bars.
4. In thin walls or inaccessible portions of the forms where rodding is impractical, the concrete shall be worked into place by tapping or hammering forms adjacent to the freshly deposited concrete.
5. The Contractor's attention is called to the importance of making the concrete dense, and he shall provide sufficient labor to the entire satisfaction of the Project Manager to thoroughly consolidate the concrete, avoid air pockets and voids in exposed sections, and leave smooth, uniform surfaces after forms are removed.
6. Should any honeycombed concrete be disclosed upon removal of forms, the Contractor shall immediately cut out the said honeycombed portions back to solid concrete and shall fill the opening thus formed with a concrete of the same proportions as that specified for the section of work in which the fault occurs.
7. When placing fresh concrete upon hardened concrete, the latter shall be thoroughly roughened and cleaned of all loose material, scum or latency. The bonding compound shall be applied and the new concrete placed while the bonding compound is still tacky.
8. Joints in the concrete work shall be made only in places and the manner specified by the Project Manager.
9. The Contractor's attention is called to the importance of properly and carefully placing concrete around reinforcement, as the reinforcing metal must not be exposed; and in cases where reinforcing metal becomes exposed on the surface, that portion of work must be removed and re-laid as the covering of same by plastering with cement mortar will not be allowed. All reinforcing rods or other reinforcing material shall be lightly tapped so that they will retain their original position.
10. No concrete shall be retempered except as allowed in ASTM C 94 nor shall set concrete be used as aggregate.

J. Deposit and consolidate concrete for floors and slabs in a continuous operation, within limits of construction joints, until placement of a panel or section is complete.

1. Consolidate concrete during placement operations so concrete is thoroughly worked around reinforcement and other embedded items and into corners.
2. Maintain reinforcement in position on chairs during concrete placement.

    a. Reinforcement, unless otherwise indicated, shall be placed one-half the thickness of the slab.

3. Screed slab surfaces with a straightedge and strike off to correct elevations.
4. Slope surfaces uniformly to drains where required.
5. Begin initial floating using bull floats or darbies to form a uniform and open-textured surface plane, free of humps or hollows, before excess moisture or bleedwater appears on the surface. Do not further disturb slab surfaces before starting finishing operations.
6. In addition to steel bar reinforcement, slabs shall be reinforced with fibrous concrete reinforcement which is to be added when the concrete is being batched in strict accordance with the manufacturer's recommendations.
7. Slabs shall be monolithically placed with control joints. Sawed control joints will be located as indicated on the drawings and/or as directed by the Project Manager. Floors shall be cleaned of objects before saw cutting begins. A true, continuous saw cut is what is expected as a finish result.

K. Cold-Weather Placement: Comply with ACI 306.1 and as follows. Protect concrete work from physical damage or reduced strength that could be caused by frost, freezing actions, or low temperatures.

1. When air temperature has fallen to or is expected to fall below 40 deg F (4.4 deg C), uniformly heat water and aggregates before mixing to obtain a concrete mixture temperature of not less than 50 deg F (10 deg C) and not more than 80 deg F (27 deg C) at point of placement.
2. Do not use frozen materials or materials containing ice or snow. Do not place concrete on frozen subgrade or on subgrade containing frozen materials.
3. Do not use calcium chloride, salt, or other materials containing antifreeze agents or chemical accelerators, unless otherwise specified and approved in mix designs.
4. Contractor shall have on the job, ready to install, adequate equipment for heating the materials and the freshly placed concrete and for enclosing the work in accordance with the requirements specified herein.

L. Hot-Weather Placement: Place concrete according to recommendations in ACI 305R and as follows, when hot-weather conditions exist:

1. Cool ingredients before mixing to maintain concrete temperature below 90 deg F (32 deg C) at time of placement. Chilled mixing water or chopped ice may be used to control temperature, provided water equivalent of ice is calculated to total amount of mixing water. Using liquid nitrogen to cool concrete is Contractor's option.
2. Cover steel reinforcement with water-soaked burlap so steel temperature will not exceed ambient air temperature immediately before embedding in concrete.
3. Fog-spray forms, steel reinforcement, and subgrade just before placing concrete. Keep subgrade moisture uniform without standing water, soft spots, or dry areas.

M. Protection:

1. Concrete just placed shall be protected from rain in an approved manner until the concrete has set, or if a slab, the curing compound has dried.
2. Concrete, when placed in the forms, shall have a temperature of not less than 50 degrees F or more than 90 degrees F. Freshly placed concrete and the surrounding air shall be maintained at a temperature of 50 degrees F or greater for a period of seven days after placing. If high early strength concrete is used, the aforementioned time period may be reduced to three days. The methods of protection and curing shall be such as to prevent evaporation of moisture from the concrete and injury to the surface.
3. Should it later develop that any concrete work has become injured in any way by freezing or otherwise, the defective concrete shall be repaired or replaced as directed by the Project Manager at no added expense to the Owner. Repair materials shall include all reinforcement grouts, dry pack, admixtures, epoxy and aggregates as may be necessary

4.8 FINISHING FLOORS AND SLABS

A. General: Comply with recommendations in ACI 302.1R for screeding, restraightening, and finishing operations for concrete surfaces. Do not wet concrete surfaces.

1. All interior portions of the concrete floor slabs shall be finished true and smooth by magnesium trowel. All exterior portions of the slabs shall be broom finished.
2. When a section of the concrete floor is completed, it shall be left entirely undisturbed until the concrete is thoroughly hardened.
3. Adequate provisions will be made to eliminate the possibility of accidental encroachment upon the newly concreted area.

B. Float Finish: Consolidate surface by hand floating. Repeat float passes and restraightening until surface is left with a uniform, smooth, granular texture.

C. Trowel Finish: Do not apply a steel trowel finish to air-entrained concrete.

D. Broom Finish: Apply a broom finish to exterior concrete platforms.

1. Immediately after float finishing, slightly roughen trafficked surface by brooming with fiber-bristle broom perpendicular to main traffic route. Coordinate required final finish with Project Manager before application.

4.9 MISCELLANEOUS CONCRETE ITEMS

A. Filling In: Fill in holes and openings left in concrete structures, unless otherwise indicated, after work of other trades is in place. Mix, place, and cure concrete, as specified, to blend with in-place construction. Provide other miscellaneous concrete filling indicated or required to complete Work.

4.10 CONCRETE PROTECTION AND CURING

A. General: Protect freshly placed concrete from premature drying and excessive cold or hot temperatures. Comply with ACI 306.1 for cold-weather protection and with recommendations in ACI 305R for hot-weather protection during curing.

B. Unformed Surfaces: Begin curing immediately after finishing concrete. Cure unformed surfaces, including floors and slabs, and other surfaces as indicated below

1. Exterior:

a. Concrete slabs, and related work shall receive the specified curing compound applied in strict accordance with the manufacturer's written recommendations.

4.11 CONCRETE SURFACE REPAIRS

A. Defective Concrete: Repair and patch defective areas when approved by Project Manager. Remove and replace concrete that cannot be repaired and patched to Project Manager approval.

B. Patching Mortar: Mix dry-pack patching mortar, consisting of one part portland cement to two and one-half parts fine aggregate passing a No. 16 (1.2-mm) sieve, using only enough water for handling and placing.

C. Repairing Formed Surfaces: Surface defects include color and texture irregularities, cracks, spalls, air bubbles, honeycombs, rock pockets, fins and other projections on the surface, and stains and other discolorations that cannot be removed by cleaning.

1. Immediately after form removal, cut out honeycombs, rock pockets, and voids more than 1/2 inch (13 mm) in any dimension in solid concrete but not less than 1 inch (25 mm) in depth. Make edges of cuts perpendicular to concrete surface. Clean, dampen with water, and brush-coat holes and voids with bonding agent. Fill and compact with patching mortar before bonding agent has dried. Fill form-tie voids with patching mortar or cone plugs secured in place with bonding agent.
2. Repair defects on surfaces exposed to view by blending white portland cement and standard portland cement so that, when dry, patching mortar will match surrounding color. Patch a test area at inconspicuous locations to verify mixture and color match before proceeding with patching. Compact mortar in place and strike off slightly higher than surrounding surface.
3. Repair defects on concealed formed surfaces that affect concrete's durability and structural performance as determined by Project Manager.

D. Repairing Unformed Surfaces: Test unformed surfaces, such as floors and slabs, for finish and verify surface tolerances specified for each surface. Correct low and high areas. Test surfaces sloped to drain for trueness of slope and smoothness; use a sloped template.

1. Repair finished surfaces containing defects. Surface defects include spalls, popouts, honeycombs, rock pockets, crazing and cracks in excess of 0.01 inch (0.25 mm) wide or that penetrate to reinforcement or completely through unreinforced sections regardless of width, and other objectionable conditions.
2. After concrete has cured at least 14 days, correct high areas by grinding.
3. Correct localized low areas during or immediately after completing surface finishing operations by cutting out low areas and replacing with patching mortar. Finish repaired areas to blend into adjacent concrete.
4. Correct other low areas scheduled to remain exposed with a repair topping. Cut out low areas to ensure a minimum repair topping depth of 1/4 inch (6 mm) to match adjacent floor elevations. Prepare, mix, and apply repair topping and primer according to

manufacturer's written instructions to produce a smooth, uniform, plane, and level surface.

5. Repair defective areas, except random cracks and single holes 1 inch (25 mm) or less in diameter, by cutting out and replacing with fresh concrete. Remove defective areas with clean, square cuts and expose steel reinforcement with at least 3/4 inch (19 mm) clearance all around. Dampen concrete surfaces in contact with patching concrete and apply bonding agent. Mix patching concrete of same materials and mix as original concrete except without coarse aggregate. Place, compact, and finish to blend with adjacent finished concrete. Cure in same manner as adjacent concrete.
6. Repair random cracks and single holes 1 inch (25 mm) or less in diameter with patching mortar. Groove top of cracks and cut out holes to sound concrete and clean off dust, dirt, and loose particles. Dampen cleaned concrete surfaces and apply bonding agent. Place patching mortar before bonding agent has dried. Compact patching mortar and finish to match adjacent concrete. Keep patched area continuously moist for at least 72 hours.

E. Repair materials and installation not specified above may be used, subject to Project Manager's approval.

END OF SECTION

SECTION 06100 - ROUGH CARPENTRY

PART 1 - GENERAL

1.1 SUMMARY

A. This Section includes the following:

1. Framing with dimension lumber.
2. Wood blocking and nailers.
3. Roof perimeter wood blocking
4. Wood furring.
5. Sheathing.
6. Plywood backing panels.
7. Building paper.

B. Related Sections include the following:
1. Division 6 Section "Finish Carpentry" for nonstructural carpentry items exposed to view and not specified in another Section.

1.2 DEFINITIONS

A. Rough Carpentry: Carpentry work not specified in other Sections and not exposed, unless otherwise indicated.

B. Exposed Framing: Dimension lumber not concealed by other construction.

C. Lumber grading agencies, and the abbreviations used to reference them, shall conform to industry standards including: NELMA, NLGA, SPIB, APA.

D. Stack lumber, plywood, and other panels; place spacers between each bundle to provide air circulation. Provide for air circulation around stacks and under coverings.

PART 2 - PRODUCTS

a. Metal Framing Anchors: may be Harlen Metal Products, Inc., KC Metals Products, Inc., Simpson Strong-Tie Company, Inc., United Steel Products Company, Inc,. Southeastern Metals Manufacturing Co., Inc.

2.2 WOOD PRODUCTS, GENERAL

A. Lumber: DOC PS 20 and applicable rules of lumber grading agencies certified by the American Lumber Standards Committee Board of Review.

1. Factory mark each piece of lumber with grade stamp of grading agency.

2. Where nominal sizes are indicated, provide actual sizes required by DOC PS 20 for moisture content specified. Where actual sizes are indicated, they are minimum dressed sizes for dry lumber.
3. Provide dressed lumber, S4S, unless otherwise indicated.
4. Provide dry lumber with 19 percent maximum moisture content at time of dressing for 2-inch nominal thickness or less, unless otherwise indicated.

B. Kiln-dry material after treatment to a maximum moisture content of 19 percent for lumber. Do not use material that is warped or does not comply with requirements for untreated material.

2.3 DIMENSION LUMBER

A. General: Provide dimension lumber of grades indicated according to the American Lumber Standards Committee National Grading Rule provisions of the grading agency indicated.

B. Non-Load-Bearing Interior Partitions: No. 2 and any of the following species:

1. Mixed southern pine; SPIB.
2. Spruce-pine-fir (south) or Spruce-pine-fir; NELMA, NLGA, WCLIB, or WWPA.
3. Northern species; NLGA.
4. Spruce-pine-fir; NLGA.
5. Western woods; WCLIB or WWPA.

C. Exterior and Load-Bearing Walls No. 2 or better any of the following species:

1. Southern pine; SPIB.
2. Spruce-pine-fir (south); NELMA, WCLIB, or WWPA.
3. Spruce-pine-fir; NLGA.

D. Ceiling Joists (Non-Load-Bearing): No. 2 and any of the following species:

1. Mixed southern pine; SPIB.
2. Spruce-pine-fir (south); NELMA, WCLIB, or WWPA.
3. Spruce-pine-fir; NLGA.

E. Joists, Rafters, and Other Framing Not Listed Above: No. 2 grade and any of the following species:

1. Douglas fir-larch; WCLIB or WWPA.
2. Douglas fir-south; WWPA.
3. Douglas fir-larch (north); NLGA.
4. Hem-fir; WCLIB or WWPA.
5. Hem-fir (north); NLGA.
6. Southern pine; SPIB.
7. Spruce-pine-fir (south); NELMA, WCLIB, or WWPA.
8. Spruce-pine-fir; NLGA.

F. Exposed Exterior Framing Indicated to Receive a Stained or Natural Finish: Provide material hand-selected for uniformity of appearance and freedom from characteristics that would impair finish appearance.

1. Species and Grade: As indicated above for load-bearing construction of same type.

2.4 MISCELLANEOUS LUMBER

A. General: Provide lumber for support or attachment of other construction, including the following:

1. Roof perimeter blocking.
2. Blocking.
3. Cants.
4. Nailers.
5. Furring.
6. Bracing

B. For items of dimension lumber size, provide No. 2 lumber with 19 percent maximum moisture content and any of the following species:

1. Eastern softwoods; NELMA.
2. Northern species; NLGA.
3. Western woods; WCLIB or WWPA.

C. For exposed boards, provide lumber with 19 percent maximum moisture content and any of the following species and grades:

1. Western red cedar, B grade; NLGA or WWPA.

2.5 SHEATHING

A. Plywood Wall Sheathing: Exterior sheathing.

1. Span Rating: Not less than 32/16.
2. Thickness: Not less than 1/2 inch.

B. Oriented-Strand-Board Wall Sheathing: Exposure 1 sheathing.

1. Span Rating: Not less than 32/16.
2. Thickness: Not less than 1/2 inch.

C. Plywood Roof Sheathing: Exterior, Structural I Exposure 1 sheathing.

1. Span Rating: Not less than 32/16.
2. Thickness: Not less than 1/2 inch

D. Oriented-Strand-Board Roof Sheathing: Exposure 1, sheathing.

1. Span Rating: Not less than 32/16.
2. Thickness: Not less than 1/2 inch.

2.6 PLYWOOD BACKING PANELS

A. Plywood backing panels behind FRP panels shall be ½” exterior grade plywood.

2.7 FASTENERS

A. General: Provide fasteners of size and type indicated that comply with requirements specified in this Article for material and manufacture.

1. Where rough carpentry is exposed to weather, in ground contact, or in area of high relative humidity, provide fasteners with hot-dip zinc coating complying with ASTM A 153/A 153M.

B. Nails, Brads, and Staples: ASTM F 1667.

C. Power-Driven Fasteners: CABO NER-272.

D. Wood Screws: ASME B18.6.1.

E. Screws for Fastening to Cold-Formed Metal Framing: ASTM C 954, except with wafer heads and reamer wings, length as recommended by screw manufacturer for material being fastened.

F. Lag Bolts: ASME B18.2.1..

G. Expansion Anchors: Anchor bolt and sleeve assembly of material indicated below with capability to sustain, without failure, a load equal to 6 times the load imposed when installed in unit masonry assemblies and equal to 4 times the load imposed when installed in concrete as determined by testing per ASTM E 488 conducted by a qualified independent testing and inspecting agency.

1. Material: Carbon-steel components, zinc plated to comply with ASTM B 633, Class Fe/Zn 5.

2.8 MISCELLANEOUS MATERIALS

A. Building Paper: Asphalt-saturated organic felt complying with ASTM D 226, Type I (No. 15 asphalt felt), unperforated.

PART 3 - EXECUTION

3.1 INSTALLATION, GENERAL

A. Set rough carpentry to required levels and lines, with members plumb, true to line, cut, and fitted. Fit rough carpentry to other construction; scribe and cope as needed for accurate fit. Locate furring, nailers, blocking, grounds, and similar supports to comply with requirements for attaching other construction.

B. Do not use materials with defects that impair quality of rough carpentry or pieces that are too small to use with minimum number of joints or optimum joint arrangement.

C. Securely attach rough carpentry work to substrate by anchoring and fastening as indicated, complying with the following:
   1. Table 2305.2, "Fastening Schedule," in the BOCA National Building Code.
   2. Table 2306.1, "Fastening Schedule," in the Standard Building Code.

D. Use common wire nails, unless otherwise indicated. Select fasteners of size that will not fully penetrate members where opposite side will be exposed to view or will receive finish materials. Make tight connections between members. Install fasteners without splitting wood; predrill as required.

E. Use finishing nails for exposed work, unless otherwise indicated. Countersink nail heads and fill holes with wood filler.

3.2 WOOD BLOCKING, AND NAILER INSTALLATION

A. Install where indicated and where required for attaching other work. Form to shapes indicated and cut as required for true line and level of attached work. Coordinate locations with other work involved.
   1. install wood blocking as required to support all accessories such as but not limited to grab bars, toilet paper dispensers, and urinals.

B. Attach items to substrates to support applied loading. Recess bolts and nuts flush with surfaces, unless otherwise indicated. Build anchor bolts into masonry during installation of masonry work. Where possible, secure anchor bolts to formwork before concrete placement.

C. Integrity of exterior walls and/or rated wall assemblies to be maintained. Plywood to run continuously the length of designated walls. Intersecting walls are not to interrupt plywood.

3.3 WOOD FRAMING INSTALLATION, GENERAL

A. Framing Standard: Comply with AFPA's "Manual for Wood Frame Construction," unless otherwise indicated.

B. Do not splice structural members between supports.

C. Where built-up beams or girders of 2-inch nominal- dimension lumber on edge are required, fasten together with 2 rows of 20d nails spaced not less than 32 inches o.c. Locate one row near top edge and other near bottom edge.

   1. For continuous members, locate end joints over supports.

3.4 WALL AND PARTITION FRAMING INSTALLATION

A. General: Arrange studs so wide face of stud is perpendicular to direction of wall or partition and narrow face is parallel. Provide single bottom plate and double top plates using members of 2-inch nominal thickness whose widths equal that of studs, except single top plate may be used for non-load-bearing partitions. Anchor plates to supporting construction, unless otherwise indicated.

1. For exterior walls, provide 2-by-4-inch nominal- size wood studs spaced 16 inches o.c., unless otherwise indicated.
2. For interior partitions and walls, provide 2-by-4-inch nominal- size wood studs spaced 16 inches o.c., unless otherwise indicated.

B. Construct corners and intersections with three or more studs. Provide blocking and framing as indicated and as required to support facing materials, fixtures, specialty items, and trim.

C. Frame openings with multiple studs and headers. Provide nailed header members of thickness equal to width of studs. Set headers on edge and support on jamb studs.

1. For non-load-bearing partitions, provide double-jamb studs with headers not less than 4-inch nominal depth for openings 48 inches and less in width, 6-inch nominal depth for openings 48 to 72 inches in width,.
2. For load-bearing walls, provide double-jamb studs for openings 72 inches and less in width, and triple-jamb studs for wider openings.

3.5 FLOOR JOIST FRAMING INSTALLATION

A. General: Install floor joists with crown edge up and support ends of each member with not less than 1-1/2 inches of bearing on wood or metal, or 3 inches on masonry. Attach floor joists as follows:

1. Where supported on wood members, by using metal framing anchors.
2. Where framed into wood supporting members, by using wood ledgers as indicated or, if not indicated, by using metal joist hangers.

B. Do not notch in middle third of joists; limit notches to one-sixth depth of joist, one-third at ends. Do not bore holes larger than 1/3 depth of joist; do not locate closer than 2 inches from top or bottom.

3.6 CEILING JOIST AND RAFTER FRAMING INSTALLATION

A. Ceiling Joists: Install ceiling joists with crown edge up and complying with requirements specified above for floor joists. Face nail to ends of parallel rafters.

1. Where ceiling joists are at right angles to rafters, provide additional short joists parallel to rafters from wall plate to first joist; nail to ends of rafters and to top plate and nail to first joist or anchor with framing anchors or metal straps.

B. Rafters: Notch to fit exterior wall plates and toenail or use metal framing anchors. Double rafters to form headers and trimmers at openings in roof framing, if any, and support with metal hangers. Where rafters abut at ridge, place directly opposite each other and nail to ridge member or use metal ridge hangers.

1. At hips, provide hip rafter of size indicated or, if not indicated, of same thickness as regular rafters and 2 inches deeper. Bevel ends of jack rafters for full bearing against hip rafter.

C. Provide special framing as indicated for eaves, overhangs, dormers, and similar conditions, if any.

3.7 BUILDING PAPER APPLICATION

A. Apply building paper horizontally with 2-inch overlap and 6-inch end lap; fasten to sheathing with galvanized staples or roofing nails. Cover upstanding flashing with 4-inch overlap.

END OF SECTION

SECTION 06200 – FINISH CARPENTRY

1.1 WORK INCLUDED

A. Furnish all labor, materials, equipment, supplies and perform all operations necessary to complete the finish carpentry work in accordance with the drawings and these specifications.

B. The work includes, but is not limited to the following:

1. Trim
2. Outside Finish
3. Inside Finish
4. Miscellaneous Carpentry

1.2 RELATED WORK

A. Section 02540 – Vault toilet tank and accessories

B. Section 06100 - Rough Carpentry

C. Section 07600 - Flashing and Sheet Metal

D. Section 07900 - Sealants

E. Section 08210 - Wood Doors

F. Section 09900 - Painting

1.3 QUALITY ASSURANCE

A. All standing and running trim shall conform to AWI standards for custom grade where used for painted or opaque finish.

B. All plywood shall conform to AWI custom grade.

1.4 SUBMITTALS

A. Product data: Submit two (2) copies of product date sheets for the following materials:

1. Cedar shingles
2. Cedar trim
3. Soffit vents

1.5 DELIVERY, STORAGE AND HANDLING

A. Handle and store all materials so as not to cause damage to the material.

B. Store all materials under cover and protected from dampness.

C. Store all wood items on blocking up off of concrete floors.

PART 2 - PRODUCTS

2.1 MATERIALS

A. Wood Trim:

1. Natural Finish: All interior and exterior standing and running trim and finish lumber shall be AWI #1 white Cedar with no loose knots or edge knots, kiln dried; unselect for color except that care shall be exercised to avoid installation of a light piece adjacent to a dark piece.

B. Wall shingles shall be Eastern white cedar from a certified source, clear, re-sawn and re-butted 18” long and ½” at the butt.

C. Soffit Ventilators: Continuous soffit vent, Model #SV202" by Air Vent, Inc Products or approved equal with insect screen.

2.2 FINISH HARDWARE

A. The finish hardware specified in Section 02540 - Finish Hardware, shall be received, checked against the invoices, stored, cared for and installed under this section of the specifications.

PART 3 - EXECUTION

3.1 INSTALLATION

A. Finish Carpentry:

1. Frames: Install all required doors , door frames, window frames and sashes, and trim as detailed. Countersink all nails and screws sufficiently to allow for proper puttying by the painter.
2. Trim: Install with properly countersunk fastenings, all required trim as shown on the drawings.
3. Soffit and Fascia: Construct all outside soffits and fascias of 1 x # 1 white cedar. Back stain, before erection, all exposed wood and plywood and caulk joints with exterior grade sealant.
4. Install louvers in strict accordance with manufacturer's recommendations.
5. Install soffit ventilators where shown on drawings and install in accordance with manufacturer's recommendations.
6. Install all toilet accessories including but not limited to grab bars and toilet paper dispensers.
7. Install hand sanitizer units.

B. Workmanship:

1. General: Work must be performed by skilled finish carpenters capable of leaving the work clean and ready for painter's finish and without damaging other abutting materials.
2. Erection: All work must be erected plumb, level and straight. Joints must be accurate and tight, and fastenings shall be provided to adequately hold the work in place and to prevent twisting. Nails shall be sized to assure holding, but not to split the member. Nails or screws shall be concealed wherever possible and set for putty. Exterior nails must be aluminum or galvanized. Exterior butt joints shall be caulked with exterior grade sealant.
   Doors shall be hung to swing with no binding and windows shall be carefully adjusted - both with allowance for painter's finish, and finally all items must be checked after painting and left in smooth working condition with all hardware attached and adjusted.

3. Back Painting: All exterior and interior running trim shall be back and edge coated with a wood stain compatible with the finish coat. Built-up doors and window trim, exterior and interior shall be treated in the same manner.
4. Cleaning and Protection: Work shall be sanded to remove all feather edges, glue smears or pencil and finger markings and left protected wherever necessary by non-staining paper ready for the painter.

C. Install doors, weather-stripping and thresholds. (See Section 02540 – vault toilet tank and accessories.

END OF SECTION

SECTION 06620 - GLASS-FIBER-REINFORCED PLASTIC

PART 1 - GENERAL

A. This Section includes the following:
   1. Glass-fiber-reinforced wall panels.

B. Related Sections include the following:
   1. Division 6 Section "Rough Carpentry" for plywood backer for surface-mounted sheets.

1.2 SUBMITTALS: Furnish samples for Project Managers approval.

A. Product Data: Include physical characteristics, such as durability, resistance to fading, and flame resistance, for each glass-fiber-reinforced panel system component indicated.

B. Shop Drawings: Show locations, extent, and installation details of each glass-fiber-reinforced panel system component. Show methods of attachment to adjoining construction.

C. Samples for Selection: Manufacturer's sample of sections of plastic material showing the full range of colors and textures available for each component indicated.
   1. Sheet or Panels: 6-by-6-inch- (150-by-150-mm-) square samples of each glass-fiber-reinforced panel required.
   2. Trim: 12-inch- (300-mm-) long Samples of each type of glass-fiber-reinforced panel component required. Include examples of joinery, corners, and field splices.

D. Material Test Reports: From a qualified testing agency indicating compliance of each glass-fiber-reinforced panel component with requirements indicated, based on tests performed by testing agency within the past five years.

E. Maintenance Data: For each glass-fiber-reinforced panel component to include in maintenance manuals specified in Division 1.
   1. Include recommended methods and frequency for maintaining optimum condition of panels under anticipated use conditions. Include precautions against using cleaning materials and methods that may be detrimental to plastic finishes and performance.
   2. QUALITY ASSURANCE:

F. Installer Qualifications: An experienced installer who has completed installation of glass-fiber-reinforced panel system components similar in material, design, and extent to that indicated for this Project and whose work has resulted in construction with a record of successful in-service performance.

G. Source Limitations: Obtain each color, grade, finish, and type of glass-fiber-reinforced panel system component from a single source with resources to provide components of consistent quality in appearance and physical properties.

H. Fire-Test-Response Characteristics: Provide impact-resistant wall protection system components with the following surface-burning characteristics, as determined by testing materials identical to those required in this Section per ASTM E 84 by a testing and inspecting

agency acceptable to authorities having jurisdiction. Identify impact-resistant wall protection system components with appropriate markings of applicable testing and inspecting agency.

1. Flame Spread: 25 or less.
2. Smoke Developed: 450 or less.

1.3 DELIVERY, STORAGE, AND HANDLING

A. Store glass-fiber-reinforced wall panel materials in original undamaged packages and containers inside a well-ventilated area protected from weather, moisture, soiling, extreme temperatures, and humidity.

1. Maintain room temperature within the storage area at not less than 70 deg F (21 deg C) during the period plastic materials are stored. Keep sheet material out of direct sunlight to avoid surface distortion.
2. Panels should be stored on a solid, flat, dry surface. Do not stack on a fresh concrete floor or any other surface that emits moisture. Lay panels flat. Do not stand panels on edge. Store all products inside.

1.4 PROJECT CONDITIONS

A. Environmental Limitations: Do not install glass-fiber-reinforced wall panel components until the space is enclosed and weatherproof and ambient temperature within the building is maintained at not less than 70 deg F (21 deg C) for not less than 72 hours before beginning installation. Do not install glass-fiber-reinforced wall panel systems until that temperature has been attained and is stabilized.

PART 2 - PRODUCTS

2.1 MANUFACTURERS

A. Available Manufacturers: Subject to compliance with requirements, manufacturers offering impact-resistant wall protection system products that may be incorporated into the Work include, but are not limited to, the following:

1. Fire-X Glasbord with Surfaseal by Kemlite Company.

2.2 MATERIALS

A. Plastic Sheet Wall Covering Material: Semirigid, textured, chemical- and stain-resistant, high-impact-resistant, PVC or acrylic-modified vinyl plastic sheet; thickness as indicated, meeting the following.

1. Barcol Hardness (scratch resistance) of 55 as per ASTM D-2583.
2. Panels will exhibit no more than a 0.038% weight loss after a 25-cycle Taber Abrasion Test using CS-17 abrasive wheels with 1000 g. wt.
3. Gardner Impact Strength of 22 in. - lbs. (25.6 cm - kg) showing no visible damage on front side per ASTM D-3029.
4. FMRC (Factory Mutual Research Center) approved. Subject to the conditions of approval as described in FMRC Report J.I. IV549.AM-embossed FXI .09” only.
5. Meets USDA / FSIS Requirements.
6. ICBO Report Number 4583.

7. A means of frontside identification and confirmation of meeting Class I (A) interior finish requirements after installation and while in service (without labels).
8. Color and Texture: As selected by the Project Manager from manufacture standard options.

B. Moldings: Harmonizing PVC (polyvinyl chloride) moldings.

C. Fasteners: Non-corrosive drive rivets. Provide rivets in matching color to panel. Fasten in pattern recommended in installation instructions.

D. Adhesive: Type recommended by the manufacturer for use with material on the substrate indicated.

PART 3 - EXECUTION

3.1 EXAMINATION

A. Examine backup surfaces to determine that corners are plumb and straight, surfaces are smooth, uniform, clean and free from foreign matter, nails countersunk, joints and cracks filled flush and smooth with the adjoining surface.
1. Complete finishing operations, including painting, before installing glass-fiber-reinforced panel system components.

B. Proceed with installation only after unsatisfactory conditions have been corrected.

3.2 PREPARATION

A. General: Before installation, clean substrate to remove dust, debris, and loose particles.

3.3 INSTALLATION

A. Prefit each panel before fastening and / or adhering in place. All cutting and drilling should be done prior to applying adhesive. Rivet holes should be predrilled using a bit that is 1/8" (3.2mm) larger than the rivet.
1. Do not use materials with chips, cracks, voids, stains, or other defects that might be visible in the finished Work.

B. Follow adhesive manufacturer's recommendations for appropriate height of adhesive bead left by trowel. Use a "crosshatch" type pattern. Make sure adhesive extends to all edges of the panel. Adhesive should be applied directly to the back of the frp panel.

C. Start in corner. Install one piece corner molding. Apply silicone sealant in molding. Slide panel into molding and withdraw 1/8" (3.2mm). This will provide the appropriate gap as recommended. Begin in corner nearest molding and with laminate roller begin rolling out towards the edge without the molding.

D. Continue rolling down and out working your way across the panel away from the previously installed panel or initial molding to remove all trapped air.

E. Install fasteners as each panel is being put in place and before next molding is put on. This will help work out any air pockets and help ensure a flat installation. Install fasteners 16" (406.4mm) on center both directions. Space perimeter holes at least 1" to 1-1/2" (25.4mm - 38.1mm) from the panel edge when using 1-piece moldings and stagger holes of abutting panels. When using 2 piece moldings put perimeter holes 1-1/2" to 2" (38.1mm - 50.8mm) away from the panel edge if possible. Remember to overdrill holes 1/8” larger than fastener.

F. Plan ahead so fasteners will not interfere with moldings or other wall fixtures. Do not fasten perimeter of panels until panel has been rolled out. Drill hole into substrate through predrilled holes in panel. Try to center fasteners as much as possible within predrilled hole.

G. Start fastening at edge with installed molding and work toward the other side. Continue installing fasteners one row at a time until fastening is complete. Apply silicone sealant beneath rivet or fastener. Install other molding after fastening is complete.

H. Install one piece division bar and caps or next molding by laying down bead of silicone sealant in molding and sliding onto the panel. Withdraw the molding 1/8" (3.2mm), again to provide proper spacing. The free edge of the molding may be tacked in place if preferred before installing the next panel.

I. Repeat the process working in one direction across the ceiling.

J. Apply silicone sealant in all moldings and around all panel edges, fasteners, and fixtures to provide a moisture proof installation.

K. Factory Mutual Compliance: Panels must always be installed with mechanical fasteners.Insert similar paragraphs for other special applications as required for Project.

3.4 CLEANING

A. Remove any adhesive or excessive sealant from panel face using solvent or cleaner recommended by panel manufacturer.

B. Remove surplus materials, rubbish, and debris, resulting from installation, on completion of work and leave installation areas in neat, clean condition.

END OF SECTION

SECTION 07311 - ASPHALT SHINGLES

PART 1 - GENERAL

A. This Section includes asphalt shingles for steep roofs.

B. Related Sections: The following Sections contain requirements that relate to this Section:
   1. Division 6 Section "Rough Carpentry" for wood sheathing and framing.

1.2 SUBMITTALS

A. Product Data: Provide for each type of product specified, including details of construction relative to materials, dimensions of individual components, profiles, textures, and colors.

B. Samples for Selection: Submit in the form of manufacturer's sample finishes showing the full range of colors and profiles available for each type of asphalt shingle indicated.

1.3 QUALITY ASSURANCE

A. Fire-Test-Response Classification: Where products with a fire-test-response classification are specified, provide asphalt shingles identical to those tested according to ASTM E 108 or UL 790 and listed by UL or another testing and inspecting agency acceptable to authorities having jurisdiction. Identify each bundle of asphalt shingles with appropriate markings indicating fire-test-response classification of applicable testing and inspecting agency.

B. Wind-Resistance-Test Characteristics: Where wind-resistant asphalt shingles are indicated, provide products identical to those tested according to ASTM D 3161 or UL 997 and passed. Identify each bundle of asphalt shingles with appropriate markings of applicable testing and inspecting agency.

1.4 DELIVERY, STORAGE, AND HANDLING

A. Deliver materials to Project site in manufacturer's unopened bundles or containers with labels intact.

B. Handle and store materials at Project site to prevent water damage, staining, or other physical damage. Store roll goods on end. Comply with manufacturer's recommendations for job-site storage, handling, and protection.

1.5 PROJECT CONDITIONS

A. Weather Limitations: Proceed with installing asphalt shingles only when existing and forecasted weather conditions will permit work to be performed according to manufacturers' recommendations and warranty requirements, and when substrate is completely dry.

1.6 WARRANTY

A. General Warranty: The special warranty specified in this Article shall not deprive the Owner of other rights the Owner may have under other provisions of the Contract Documents and shall be in addition to, and run concurrent with, other warranties made by the Contractor under requirements of the Contract Documents.

B. Special Warranty: Submit a written warranty signed by manufacturer agreeing to repair or replace asphalt shingles that fail in materials or workmanship within the specified warranty period. Failures include, but are not limited to, deformation or deterioration of asphalt shingles beyond normal weathering.
   1. Warranty Period: Manufactures standard 40 year Lifetime limited warranty after date of Substantial Completion.

1.7 EXTRA MATERIALS

A. Furnish extra materials described below that match products installed, are packaged with protective covering for storage, and are identified with labels clearly describing contents.
   1. Furnish 1 square (9.29 sq. m) coverage of asphalt shingles, identical to those to be installed, in unbroken bundles.

PART 2 - PRODUCTS

2.1 MANUFACTURERS

A. Available Manufacturers and Products: Subject to compliance with requirements, manufacturers offering asphalt shingles that may be incorporated in the Work include, but are not limited to, the following:

B. Available Products: Subject to compliance with requirements, products that may be incorporated in the Work include, but are not limited to, the following:
   1. Ridge Vents:
      a. Ridge Filtervent; Air Vent, Inc. (for Class A).
      b. Cobra Ridge Vent; GAF Building Materials Corporation.
      c. Roll Vent; Obdyke: Benjamin Obdyke, Inc.
   2. Waterproof Underlayment:
      a. Bituthene Ice and Water Shield; Grace: W.R. Grace & Co.
      b. CertainTeed "WinterGuard"; ASTM D 1970 sheet barrier of self-adhering rubberized asphalt membrane shingle underlayment having internal reinforcement, and "split" back plastic release film; provide material with warranty equal in duration to that of shingles being applied.

2.2 ASPHALT SHINGLES

A. Colors, Blends, and Patterns: Where manufacturer's standard products are indicated, provide asphalt shingles with the following requirements:
   1. Provide Project Manager’s selections from manufacturer's full range of colors, textures, and patterns for asphalt shingles of type indicated.

B. Conforming to ASTM D 3018 Type I - Self-Sealing; UL Certification of ASTM D 3462, UL 997 110-mph Wind Resistance, and UL Class A Fire Resistance; glass fiber mat base; ceramically colored/UV resistant mineral surface granules across entire face of shingle; full two-layer laminated four-tab shingle, plus additional random tabs

C. Selections below correspond to types presented in "the NRCA Steep Roofing Manual." Edit and delete types not required.

D. Hip and Ridge Shingles: Job-fabricated units cut from manufacturer's standard cap asphalt shingles.

2.3 METAL TRIM AND FLASHING

A. Refer to Division 7 Section "Sheet Metal Flashing and Trim" for associated flashing.

B. Vent Pipe Flashing: Pipes penetrating shingled roofs shall be ARFCO self-sealing neoprene collar with copper flange.

2.4 ACCESSORIES

A. Waterproof Underlayment: Minimum 40-mil- (1-mm-) thick, self-adhering, polymer-modified, bituminous sheet membrane, complying with ASTM D 1970. Provide primer when recommended by underlayment manufacturer.

B. Ridge Vent: High-density polypropylene, nonwoven modified polyester, or other UV-stabilized plastic designed to be installed under asphalt shingles at ridge.

C. Asphalt Plastic Cement: Nonasbestos fibrated asphalt cement, complying with ASTM D 4586.

D. Nails: Aluminum or hot-dip galvanized steel, 0.120-inch- (3-mm-) diameter barbed shank, sharp-pointed, conventional roofing nails with a minimum 3/8-inch- (9.5-mm-) diameter head and of sufficient length to penetrate 3/4 inch (19 mm) into solid decking or at least 1/8 inch (3 mm) through plywood sheathing.

1. Where nails are in contact with flashing, prevent galvanic action by providing nails made from the same metal as that of the flashing.

PART 3 - EXECUTION

3.1 EXAMINATION

A. Examine substrate for compliance with requirements for substrates, installation tolerances, and other conditions affecting performance of asphalt shingles. Do not proceed with installation until unsatisfactory conditions have been corrected.

3.2 PREPARATION

A. Clean substrates of projections and substances detrimental to application. Cover knotholes or other minor voids in substrate with sheet metal flashing secured with non-corrosive roofing nails.

B. Coordinate installation with flashings and other adjoining work to ensure proper sequencing. Do not install roofing materials until all vent stacks and other penetrations through roof sheathing have been installed and are securely fastened against movement.

3.3 INSTALLATION

A. General: Comply with manufacturer's instructions and recommendations but not less than those recommended by ARMA's "Residential Asphalt Roofing Manual" or "The NRCA Steep Roofing Manual."

B. Waterproof Underlayment: Apply waterproof underlayment on entire roof area. Cover deck from eaves to at least 24 inches (600 mm) inside exterior wall line.

C. Flashing: Refernce Section 07600 – Flashing and Sheet Metal for requirements.

D. Install asphalt shingles, beginning at roof's lower edge, with an asphalt shingle with tabs removed (do not invert shingle). Fasten asphalt shingles in the desired weather exposure pattern; use 6 fasteners per shingle. Use vertical and horizontal chalk lines to ensure straight coursing.
   1. Cut and fit asphalt shingles at valleys, ridges, and edges to provide maximum weather protection. Provide same weather exposure at ridges as specified for roof. Lap asphalt shingles at ridges to shed water away from direction of prevailing wind.
   2. Use fasteners at ridges of sufficient length to penetrate sheathing as specified.
   3. Pattern: 1/2 shingle spacing offset at succeeding courses.

E. Ridge Vents: Install ridge vents according to manufacturer's instructions.

3.4 ADJUSTING

A. Replace any damaged materials installed under this Section with new materials that meet specified requirements.

END OF SECTION

SECTION 07900 - SEALANTS

PART 1: GENERAL

1.01 WORK INCLUDED

A. Furnish all labor, equipment and materials, and perform all operations necessary to complete all sealant and caulking work in accordance with the drawings and these specifications.

1.02 SUBMITTALS

A. Manufacturers' Descriptive Data: Submit six (6) copies of complete descriptive data for each type of material. Clearly mark data to indicate the type the Contractor intends to provide. Data shall state conformance to specified requirements. Data for sealant and caulking shall include application instructions, shelf life, mixing instructions for multicomponent sealants, and recommended cleaning solvents.

1.03 QUALITY ASSURANCE

A. Applicator: Two years' experience required for sealant applicators.

1.04 DELIVERY, STORAGE AND HANDLING

A. Deliver materials to the job site in the manufacturers' external shipping containers, unopened, with brand names, date of manufacture, color, and material designation clearly marked thereon. Containers of sealant shall be labeled as to type, class, grade, and use. Carefully handle and store all materials to prevent inclusion of foreign materials or subjection to sustained temperatures exceeding 100°F or less than 40°F.

1.05 ENVIRONMENTAL CONDITIONS

A. Apply exterior caulking materials only when temperature exceeds 50°F and when drying weather exists and is predicted by official weather reports for the next 24 hours.

PART 2: PRODUCTS

2.01 MATERIALS

A. Products shall conform to the reference documents listed for each use. Color of sealant and caulking shall match adjacent surface color unless specified otherwise. For ASTM C 920 sealants, use a sealant that has been tested on the type(s) of substrate to which it will be applied.

1. Type 1: General Use Sealant: Sealant material shall be 100% urethane base Sonolastic NP 1 manufactured by Sonneborn, Dynatrol 1 by Pecora or Sikaflex 1A Sika. Colors are to be selected by the Project Manager. Material shall comply with Federal Specification TT-S-00230C, Type II, Class A; ASTM C 920, Type S, Grade NS, Class 25; use NT, M, A.

2. Type 2: General Use Sealant shall be one-part moisture curing, pour grade polyurethane joint sealant system. Colors are to be selected by the Project Manager. Sealant shall comply with Federal Specification TT-S - 230C, Type I, Class A, ASTM C 920-87, Type S, Grade P, Class 25, NP-II as manufactured by Nameco or an approved equal. Non-sag or self-leveling formulation as applicable.

3. Joint Cleaner shall be as recommended by the caulk or sealant manufacturer for the particular application.

4. Joint Primer/Sealer shall be as recommended by the caulk or sealant manufacturer for the particular application.

5. Bond Breakers: Use the type and consistency recommended by the sealant manufacturer for the particular application.

6. Back-up Rod: ASTM C 962, Type A, joint fillers; closed cell neoprene, butyl, polyurethane, vinyl, or polyethylene rod; diameter approximately 1-1/3 times the joint width. Back-up rod material shall be compatible with the sealant.

PART 3: EXECUTION

3.01 SURFACE PREPARATION

A. Surfaces shall be clean, dry, to the touch, and free from frost, moisture, grease, oil, wax, lacquer, paint, or other foreign matter that would tend to destroy or impair adhesion. Where adequate grooves have not been provided, clean out grooves to a depth to the adjoining work. No grinding shall be required on metal surfaces.

1. Steel Surfaces: Remove loose mill scale by sandblasting or, if sandblasting is impractical or would damage finish work, scraping and wire brushing. Remove protective coatings by sandblasting or using a solvent that leaves no residue.

2. Aluminum or Bronze Surfaces: Remove temporary protective coatings from surfaces that will be in contact with sealant. When masking tape is used as a protective coating, remove tape and any residual adhesive just prior to sealant application. Use non-staining solvents recommended by the item manufacturer.

3.02 SEALANT PREPARATION

A. Do not modify the sealant by addition of liquids, solvents or powders. Mix multicomponent elastomeric sealants in accordance with manufacturer's printed instructions.

3.03 APPLICATION

A. Backstops: Where joint cavities are constructed deeper than indicated, tightly pack the back or bottom with backstop material to provide a joint of the depth indicated. Install backstops dry and free of tears or holes.

B. Primer: Just prior to application of the sealant or caulking compound, clean out all loose particles from joints. Apply primer in accordance with compound manufacturer's directions. Do not apply primer to exposed finish surfaces.

C. Bond Breaker: Provide bond breakers as recommended by the sealant manufacturer for each type of joint and sealant used.

D. Sealant and Caulking Compounds: Use a compound that is compatible with the material to and against which it is applied. Do not use a compound that has exceeded its shelf life or has become too jelled to be discharged in a continuous flow from the gun. Apply the compound in accordance with the manufacturer's printed instructions. Force the compound into joints with sufficient pressure to fill the joints solidly. Compound shall be uniformly smooth and free of wrinkles.

E. Exterior Sealant: Provide sealant at all joints around the perimeter of openings, at all exposed joints on the building, and at all joints indicated to receive sealant.

F. Exterior Masonry Wall Construction Joints: From 6" below finish grade to the top of the wall, joint shall be filled with polyethylene foam backer rod to within 1/2" from the surface. A polyurethane sealant shall be applied over foam backer and filled to become flush with wall. The below grade joint to be filled with asphalt.

G. Exterior Horizontal Granite Entry Panel Joints: Use a 3 part compound which is compatible with the materila to and against which it is to be applied. Apply the compound in accordance with the manufacturer’s printed instructions. Force the compound into the joints with sufficient pressure to fill the joint solidly. Provide joint filler material to provide depth surface to which the compound can be applied. Compound finish shall be smooth and free of wrinkles upon final set.

3.04 SEALANT SCHEDULE

SEALANT AND JOINT FILLER LOCATION	1	2	3	4	5
Granite Floor and Wall Panel Joint Sealant (exposed, painted or colored slabs) (areas with foot traffic)		**X**			
All exterior joints around perimeter of opening, all exposed joints of the buildings, and at all joints indicated to receive sealant	**X**	**X**			

3.05 PROTECTION AND CLEANING

A. Protection: Protect areas adjacent to joints from compound smears and migration. Masking tape may be used for this purpose if removed 5 to 10 minutes after the joint is

filled. Concrete floor joints shall be taped at edges prior to sealant placement to protect adjacent areas from sealant smears and migration. Tape shall be removed as soon as practical to prevent permanent adhesion to concrete.

B. Cleaning: Immediately scrape off fresh compound that has been smeared on masonry and rub clean with a solvent as recommended by the compound manufacturer. Upon completion of compound application, remove all remaining smears and stains resulting therefrom and leave the work in a clean and neat condition.

3.06 DEFECTIVE WORK

A. All defective work shall be rectified before the building is accepted.

B. The following types of failure will be adjudged defective work: leakage, hardening, crumbling, melting, shrinking, or running of caulking compound or staining of adjacent work.

END OF SECTION

SECTION 09900 - PAINTING

PART 1: GENERAL

1.01 WORK INCLUDED

A. Furnish all labor, equipment and materials, and perform all operations necessary to complete all painting work in accordance with the drawings and specifications to accomplish, but not necessarily limited to the following:

1. Exposed exterior structural metals.

1.02 RELATED WORK

A. Section 05500 - Metal Fabrications

1.03 QUALITY ASSURANCE

A. All materials shall be of first quality of the types listed by the manufacturer. All shall be pure, unadulterated, and delivered to the building in the original unbroken containers, bearing the name, brand number, batch number, and color for identification purposes.

B. All paint and paint colors shall be mixed at the factory or in the plant of a recognized representative. No material shall be changed, thinned, or tinted in any way except as indicated by specified printed instructions of the manufacturer.

C. Coat Designation: Where a primer coat of another painting is called for under other sections of the specifications, it shall not be considered as one of the coats of paint specified in this section.

1.04 SUBMITTALS

A. Colors and Samples:

1. Paint colors shall be as selected by the Project Manager. Furnish 3 complete sets of color cards for selection of colors. The Contractor shall then prepare samples at the job as required until the colors and textures are satisfactory.

2. Before proceeding with painting, Contractor shall, if requested, finish one length of exposed steel of each color scheme required and showing selected colors, finished texture, materials and workmanship. After approval, these sample steel lengths shall serve as a standard for similar work throughout the building.

1.05 DELIVERY, STORAGE AND HANDLING

A. All materials shall be delivered on the premises in the original sealed containers with the seals unbroken and with the name and trade brand of the manufacturer on each container. The manufacturer shall also place on each container a label on which he recommends the thinner to be used with the particular paint, if thinner is necessary.

B. Containers shall be stored inside the building at areas designated by the Contractor, raised above floor level, covered and protected until use. All materials should be stored at 70 degrees F for 24 hours before use.

C. Take precautionary measurements to prevent fire hazards and spontaneous combustions.

1.06 ENVIRONMENTAL REQUIREMENTS

A. Ensure surface temperatures of the surrounding air temperature is above 40 degrees F (5 degrees C) before applying finishes. Minimum application temperatures for latex paints for interior work is 45 degrees F (7 degrees C) and 50 degrees F (10 degrees C) for exterior work. Minimum application temperature for varnish finishes is 65 degrees F (18 degrees C).

B. Provide adequate continuous ventilation and sufficient heating facilities to maintain temperatures above 45 degrees F (7 degrees C) for 24 hours before, during and 48 hours after application of finishes.

C. Provide minimum 25 footcandles of lighting on surfaces to be finished.

1.07 EXTRA MATERIALS

A. All open containers of each type of paint shall be turned over to the Owner upon completion of the project.

1.08 MSD SHEETS

A. Deliver to the owner two (2) copies of MSD sheets for all paint and paint cleaners prior to delivery of paint products.

PART 2: PRODUCTS

2.01 ACCEPTABLE MANUFACTURERS

A. Painting materials used in connection with the work of this section shall be equal to the respective paint materials as manufactured by Tnemec, Glidden Paint Co., Pratt and Lambert Co., Sherwin-Williams, Benjamin Moore, Devoe or approved equal.

2.02 MATERIALS

A. Exterior:

1. All exposed iron, steel and other ferrous metals including roof fan housing, ventilators, vent stacks, louvers, exposed faces of lintels, shelf angles, columns and beams:

First Coat: Tnemec-Series 37-77 Chem Prime
One Coat: Tnemec-Series 66 Hi-Build Epoxoline, 3-4 mils dry
One Coat: Tnemec-Series 73 Endura-Shield, 2-3 mils dry

2. All wood trim, soffits, cornices, fascias, frieze boards and window trim and cedar shingles shall be given:

   Two Coats: SW Woodscapes House Stain Exterior solid Color A15 Series
   Color: Baja Beige

A. Concrete Floor:

1. One Coat: Sherwin Williams ArmorSeal33 Epoxy Primer/Sealer @ 8.0 mils dft.
2. Two coats: Sherwin Williams ArmorSeal 1000 HS @ 3.0 – 5.0 mils dft/ct (with anti-slip aggregate)

PART 3: EXECUTION

3.01 INSPECTION

A. Installer must examine the areas and conditions under which the work is to be installed and notify the Contractor in writing of conditions detrimental to the proper and timely completion of the work.

B. All surfaces to receive painter's finish shall be properly prepared to receive the finish. Surfaces shall be dry, free from organic matter, dirt, cement, grease, oil, loose paint, scale, scratches, finger marks, pencil marks, etc.

C. Do not proceed with the work until unsatisfactory conditions have been corrected. The starting of work shall indicate an acceptance of those areas and conditions by the installer.

3.02 PREPARATION

A. Before painting, remove hardware, accessories, plates, lighting fixtures and similar items or provide ample protection for such items. Upon completion of each space, replace above items.

B. Remove all dust, dirt, plaster dust, grease, and other extraneous matter which would affect the finished work.

C. Ferrous surfaces shall be cleaned of dirt and grease, using suitable solvents. Rust and defective paint shall be removed down to base metal and such spots retouched with primer.

D. All spaces shall be broom-cleaned before painting is started, and all surfaces to be painted shall be dry.

3.03 APPLICATION OF FINISH

A. All work shall be done in a workmanlike manner and by skilled mechanics. All materials shall be applied evenly, flow-on smoothly, free from brush marks, hairs, runs, or sags and shall be rubbed down between coats.

B. No paint or enamel shall be applied until the preceding coat is thoroughly dry and hard.

C. All materials shall be applied in accordance with the manufacturer's instructions.

D. All work adjacent to surfaces to be painted shall be adequately protected by drop cloths or other approved means. All hardware and accessories shall be removed, if necessary, to allow the bottom edges to be painted. On completion of the painting, all items removed shall be replaced. The removal and replacement of all items shall be carried out only by skilled mechanics. Include removal of hardware, escutcheons, lighting fixtures, and other items subject to damage.

E. Any damage caused by paint or painting operations shall be rectified by this Subcontractor and all touching up necessary shall be performed.

F. Generally, the workmanship and the method of carrying out the work shall be in accordance with the "Paint Manual" B.M.S. 105 issued by the National Bureau of Standards.

G. Any material introduced on the job which requires painting or finishing shall be painted or finished as part of this contract.

H. Number of coats herein specified is the minimum required. If, in the opinion of the Project Manager, surfaces do not conform to the approved samples, additional coats shall be applied.

3.04 CLEANING

A. Touch up and restore finish where damaged. Remove all paint spots from walls, glass and other surfaces. Leave work in clean, orderly and acceptable condition.

3.05 COLOR SCHEDULE

A. At the completion of his work, the Painting Contractor is to supply to both the Owner and the Project Manager a color schedule of the painting materials actually used. This schedule may differ from the one originally issued by the Project Manager and is, therefore, needed for future reference.

END OF SECTION

October 12, 2006
Supersedes August 31, 2006

STANDARD DETAIL UPDATES

Standard Details and Standard Detail updates are available at:
http://www.maine.gov/mdot/contractor-consultant-information/ss_standard_details_updates.php

Detail #	Description	Revision Date
504(15)	Diaphragms	12/30/02
507(04)	Steel Bridge Railing	2/05/03
801(02)	Drives on Non-Sidewalk Sections	4/04/03
526(33)	Concrete Transition Barrier	8/18/03
645(06)	H-Beam Posts – Highway Signing	7/21/04
645(09)	Installation of Type II Signs	7/21/04
626(09)	Electrical Junction Box for Traffic Signals and Lighting	2/25/05
604(01)	Catch Basins	11/16/05
604(05)	Type “A” & “B” Catch Basin Tops	11/16/05
604(06)	Type “C” Catch Basin Tops	11/16/05
604(07)	Manhole Top “D”	11/16/05
604(09)	Catch Basin Type “E”	11/16/05
606(02)	Multiple Mailbox Support	11/16/05
606(07)	Reflectorized Beam Guardrail Delineator Details	11/16/05
609(06)	Vertical Bridge Curb	11/16/05
504(23)	Hand-Hold Details	12/08/05
609(03)	Curb Type 3	6/27/06
609(07)	Curb Type 1	6/27/06
535(01)	Precast Superstructure - Shear Key	10/12/06

535(02)	Precast Superstructure - Curb Key & Drip Notch	10/12/06
535(03)	Precast Superstructure - Shear Key	10/12/06
535(04)	Precast Superstructure - Shear Key	10/12/06
535(05)	Precast Superstructure - Post Tensioning	10/12/06
535(06)	Precast Superstructure - Sections	10/12/06
535(07)	Precast Superstructure - Precast Slab & Box	10/12/06
535(08)	Precast Superstructure - Sections	10/12/06
535(09)	Precast Superstructure - Sections	10/12/06
535(10)	Precast Superstructure - Sections	10/12/06
535(11)	Precast Superstructure - Sections	10/12/06
535(12)	Precast Superstructure - Sections	10/12/06
535(13)	Precast Superstructure - Sections	10/12/06
535(14)	Precast Superstructure - Stirrups	10/12/06
535(15)	Precast Superstructure - Plan	10/12/06
535(16)	Precast Superstructure - Reinforcing	10/12/06
535(17)	Precast Superstructure - Notes	10/12/06

SUPPLEMENTAL SPECIFICATION

(Corrections, Additions, & Revisions to Standard Specifications - Revision of December 2002)

SECTION 101
CONTRACT INTERPRETATION

101.2 Definitions

Closeout Documentation Replace the sentence "A letter stating the amount….. DBE goals." with "DBE Goal Attainment Verification Form"

Add "Environmental Information Hazardous waste assessments, dredge material test results, boring logs, geophysical studies, and other records and reports of the environmental conditions. For a related provision, see Section 104.3.14 - Interpretation and Interpolation."

Add "Fabrication Engineer The Department's representative responsible for Quality Assurance of pre-fabricated products that are produced off-site."

Geotechnical Information Replace with the following: "Boring logs, soil reports, geotechnical design reports, ground penetrating radar evaluations, seismic refraction studies, and other records of subsurface conditions. For a related provision, see Section 104.3.14 - Interpretation and Interpolation."

SECTION 102
DELIVERY OF BIDS

102.7.1 Location and Time Add the following sentence "As a minimum, the Bidder will submit a Bid Package consisting of the Notice to Contractors, the completed Acknowledgement of Bid Amendments form, the completed Schedule of Items, 2 copies of the completed Agreement, Offer, & Award form, a Bid Bond or Bid Guarantee, and any other Certifications or Bid Requirements listed in the Bid Book."

102.11.1 Non-curable Bid Defects Replace E. with "E. The unit price and bid amount is not provided or a lump sum price is not provided or is illegible as determined by the Department."

SECTION 103
AWARD AND CONTRACTING

103.3.1 Notice and Information Gathering Change the first paragraph to read as follows: "After Bid Opening and as a condition for Award of a Contract, the Department may require an Apparent Successful Bidder to demonstrate to the Department's satisfaction that the Bidder is responsible and qualified to perform the Work."

SECTION 104
GENERAL RIGHTS AND RESPONSIBILITIES

104.3.14 Interpretation and Interpolation In the first sentence, change "…and Geotechnical Information." to "…Environmental Information, and Geotechnical Information."

Delete the entire Section 104.5.9 and replace with the following:
104.5.9 Landscape Subcontractors The Contractor shall retain only Landscape Subcontractors that are certified by the Department's Environmental Office Landscape Unit.

SECTION 105
GENERAL SCOPE OF WORK

Delete the entire Section 105.6 and replace with the following:

105.6.1 Department Provided Services The Department will provide the Contractor with the description and coordinates of vertical and horizontal control points, set by the Department, within the Project Limits, for full construction Projects and other Projects where survey control is necessary. For Projects of 1,500 feet in length, or less: The Department will provide three points. For Projects between 1,500 and 5,000 feet in length: The Department will provide one set of two points at each end of the Project. For Projects in excess of 5,000 feet in length, the Department will provide one set of two points at each end of the Project, plus one additional set of two points for each mile of Project length. For non-full construction Projects and other Projects where survey control is not necessary, the Department will not set any control points and, therefore, will not provide description and coordinates of any control points. Upon request of the Contractor, the Department will provide the Department's survey data management software and Survey Manual to the Contractor, or its survey Subcontractor, for the exclusive use on the Department's Projects.

105.6.2 Contractor Provided Services Utilizing the survey information and points provided by the Department, described in Subsection 105.6.1, Department Provided Services, the Contractor shall provide all additional survey layout necessary to complete the Work. This may include, but not be limited to, reestablishing all points provided by the Department, establishing additional control points, running axis lines, providing layout and maintenance of all other lines, grades, or points, and survey quality control to ensure conformance with the Contract. The Contractor is also responsible for providing construction centerline, or close reference points, for all Utility Facilities relocations and adjustments as necessary to complete the Work. When the Work is to connect with existing Structures, the Contractor shall verify all dimensions before proceeding with the Work. The Contractor shall employ or retain competent engineering and/or surveying personnel to fulfill these responsibilities.

The Contractor must notify the Department of any errors or inconsistencies regarding the data and layout provided by the Department as provided by Section 104.3.3 - Duty to Notify Department If Ambiguities Discovered.

105.6.2.1 Survey Quality Control The Contractor is responsible for all construction survey quality control. Construction survey quality control is generally defined as, first, performing initial field survey layout of the Work and, second, performing an independent check of the initial layout using independent survey data to assure the accuracy of the initial layout; additional iterations of checks may be required if significant discrepancies are discovered in this process. Construction survey layout quality control also requires written documentation of the layout process such that the process can be followed and repeated, if necessary, by an independent survey crew.

105.6.3 Survey Quality Assurance It is the Department's prerogative to perform construction survey quality assurance. Construction survey quality assurance may, or may not, be performed by the Department. Construction survey quality assurance is generally defined as an independent check of the construction survey quality control. The construction survey quality assurance process may involve physically checking the Contractor's construction survey layout using independent survey data, or may simply involve reviewing the construction survey quality control written documentation. If the Department elects to physically check the Contractor's survey layout, the Contractor's designated surveyor may be required to be present. The Department will provide a minimum notice of 48 hours to the Contractor, whenever possible, if the Contractor's designated surveyor's presence is required. Any errors discovered through the quality assurance process shall be corrected by the Contractor, at no additional cost to the Department.

105.6.4 Boundary Markers The Contractor shall preserve and protect from damage all monuments or other points that mark the boundaries of the Right-of-Way or abutting parcels that are outside the area that must be disturbed to perform the Work. The Contractor indemnifies and holds harmless the Department from all claims to reestablish the former location of all such monuments or points including claims arising from 14 MRSA § 7554-A. For a related provision, see Section 104.3.11 - Responsibility for Property of Others.

SECTION 106
QUALITY

106.6 Acceptance Add the following to paragraph 1 of A: "This includes Sections 401 - Hot Mix Asphalt, 402 - Pavement Smoothness, and 502 - Structural Concrete - Method A - Air Content."

Add the following to the beginning of paragraph 3 of A: "For pay factors based on Quality Level Analysis, and"

SECTION 107
TIME

107.3.1 General Add the following: "If a Holiday occurs on a Sunday, the following Monday shall be considered a Holiday. Sunday or Holiday work must be approved by the Department, except that the Contractor may work on Martin Luther King Day, President's Day, Patriot's Day, the Friday after Thanksgiving, and Columbus Day without the Department's approval."

107.7.2 Schedule of Liquidated Damages Replace the table of Liquidated Damages as follows:

From More Than	Up to and Including	Amount of Liquidated Damages per Calendar Day
$0	$100,000	$100
$100,000	$300,000	$200
$300,000	$500,000	$400
$500,000	$1,000,000	$575
$1,000,000	$2,000,000	$750
$2,000,000	$4,000,000	$900
$4,000,000	and more	$1,875

SECTION 108
PAYMENT

108.4 Payment for Materials Obtained and Stored First paragraph, second sentence, delete the words "…Delivered on or near the Work site at acceptable storage places."

SECTION 109
CHANGES

109.1.1 Changes Permitted Add the following to the end of the paragraph: "There will be no adjustment to Contract Time due to an increase or decrease in quantities, compared to those estimated, except as addressed through Contract Modification(s)."

109.1.2 Substantial Changes to Major Items Add the following to the end of the paragraph: "Contract Time adjustments may be made for substantial changes to Major Items when the change affects the Critical Path, as determined by the Department"

109.4.4 Investigation / Adjustment Third sentence, delete the words "subsections (A) - (E)"

109.5.1 Definitions - Types of Delays

B. Compensable Delay Replace (1) with the following; "a weather related Uncontrollable Event of such an unusually severe nature that a Federal Emergency Disaster is declared. The Contractor will only be entitled to an Equitable Adjustment if the Project falls within the geographic boundaries prescribed under the disaster declaration."

109.7.2 Basis of Payment Replace with the following: "Equitable Adjustments will be established by mutual Agreement for compensable items listed in Section 109.7.3-Compensable Items, based upon Unit or Lump Sum Prices. If Agreement cannot be reached, the Contractor shall accept payment on a Force Account basis as provided in Section 109.7.5 - Force Account Work, as full and complete compensation for all Work relating to the Equitable Adjustment."

109.7.3 Compensable Items Replace with the following: "The Contractor is entitled to compensation for the following items, with respect to agreed upon Unit or Lump Sum Prices:

1. Labor expenses for non-salaried Workers and salaried foremen.

2. Costs for Materials.

3. A 15 % markup on the totals of Items 1 and 2 of this subsection 109.7.3 for home office overhead and profit of the Contractor, its Subcontractors and suppliers, and any lower tier Subcontractors or suppliers, with no mark-ups on mark-ups.

4. Cost for Equipment, based on Blue Book Rates or leased rates, as set forth in Section 109.7.5(C), or the Contractor's Actual Costs if determined by the Department to be lower.
5. Costs for extended job-site overhead.

6. Time.

7. Subcontractor quoted Work, as set forth below in Section 109.7.5 (F)."

109.7.5 Force Account Work

C. Equipment

Paragraph 2, delete sentence 1 which starts; "Equipment leased…."

Paragraph 6, change sentence 2 from "The Contractor may furnish…" to read "If requested by the Department, the Contractor will produce cost data to assist the Department in the establishment of such rental rate, including all records that are relevant to the Actual Costs including rental Receipts, acquisition costs, financing documents, lease Agreements, and maintenance and operational cost records."
Add the following paragraph; "Equipment leased by the Contractor for Force Account Work and actually used on the Project will be paid for at the actual invoice amount plus 10% markup for administrative costs."

Add the following section;

"F. Subcontractor Quoted Work When accomplishing Force Account Work that utilizes Subcontractors, the Contractor will be allowed a maximum markup of 5% for profit and overhead on the Subcontractor's portion of the Force Account Work."

SECTION 110
INDEMNIFICATION, BONDING, AND INSURANCE

Delete the entire Section 110.2.3 and replace with the following:

110.2.3 Bonding for Landscape Establishment Period The Contractor shall provide a signed, valid, and enforceable Performance, Warranty, or Maintenance Bond complying with the Contract, to the Department at Final Acceptance.

The bond shall be in the full amount for all Pay Items for work pursuant to Sec 621, Landscape, payable to the "Treasurer - State of Maine," and on the Department's forms, on exact copies thereof, or on forms that do not contain any significant variations from the Department's forms as solely determined by the Department.

The Contractor shall pay all premiums and take all other actions necessary to keep said bond in effect for the duration of the Landscape Establishment Period described in Special Provision 621.0036 - Establishment Period. If the Surety becomes financially insolvent, ceases to be licensed or approved to do business in the State of Maine, or stops operating in the United States, the Contractor shall file new bonds complying with this Section within 10 Days of the date the Contractor is notified or becomes aware of such change.

All Bonds shall be procured from a company organized and operating in the United States, licensed or approved to do business in the State of Maine by the State of Maine Department of Business Regulation, Bureau of Insurance, and listed on the latest Federal Department of the Treasury listing for "Companies Holding Certificates of Authority as Acceptable Sureties on Federal Bonds and as Acceptable Reinsuring Companies."

By issuing a bond, the Surety agrees to be bound by all terms of the Contract, including those related to payment, time for performance, quality, warranties, and the Department's self-help remedy provided in Section 112.1 - Default to the same extent as if all terms of the Contract are contained in the bond(s).

Regarding claims related to any obligations covered by the bond, the Surety shall provide, within 60 Days of Receipt of written notice thereof, full payment of the entire claim or written notice of all bases upon which it is denying or contesting payment. Failure of the Surety to provide such notice within the 60-day period constitutes the Surety's waiver of any right to deny or contest payment and the Surety's acknowledgment that the claim is valid and undisputed.

SECTION 202
REMOVING STRUCTURES AND OBSTRUCTIONS

202.02 Removing Buildings Make the following change to the last sentence in the final paragraph, change "…Code of Maine Regulations 401." to "…Department of Environmental Protection Maine Solid Waste Management Rules, 06-096 CMR Ch. 401, Landfill Siting, Design and Operation."

SECTION 203
EXCAVATION AND EMBANKMENT

203.01 Description Under b. Rock Excavation; add the following sentence: "The use of perchlorate is not allowed in blasting operations."

SECTION 401
HOT MIX ASPHALT PAVEMENT

401.18 Quality Control Method A & B Make the following change to paragraph a. QCP Administrator; in the final sentence, change "…certified as a Plant Technician or Paving Inspector…" to "…certified as a Quality Assurance Technologist…"

401.201 Method A Under a. Lot Size, add the following; "Each lot will be divided into a minimum of four sublots for mix properties and five sublots for percent TMD."

401.203 Method C Second paragraph, fourth sentence, change "…Method B and C Acceptance…" to "…Method B and C Acceptance Limits, Method C the Department will pay the contract unit price. If the test results for each 250 Mg [275 ton] increment are outside these limits, the following deductions (Table 7b) shall…"

SECTION 402
PAVEMENT SMOOTHNESS

Add the following: "Projects to have their pavement smoothness analyzed in accordance with this Specification will be so noted in Special Provision 403 - Bituminous Box."
"402.02 Lot Size Lot size for smoothness will be 1000 lane-meters [3000 lane-feet]. A sublot will consist of 20 lane-meters [50 lane-feet]. Partial lots will be included in the previous lot if less than one-half the size of a normal lot. If greater than one-half the normal lot size, it will be tested as a separate lot."

SECTION 502
STRUCTURAL CONCRETE

502.05 Composition and Proportioning; TABLE #1; NOTE #2; third sentence; Change "…alcohol based saline sealer…" to "alcohol based silane sealer…". Add NOTE #6 to Class S Concrete.

502.0502 Quality Assurance Method A - Rejection by Resident Change the first sentence to read: "For an individual sublot with test results failing to meet the criteria in Table #1, or if the calculated pay factor for Air Content is less than 0.80……"

502.0503 Quality Assurance Method B - Rejection by Resident Change the first sentence to read: "For material represented by a verification test with test results failing to meet the criteria in Table #1, the Department will……"

502.0505 Resolution of Disputed Acceptance Test Results Combine the second and third sentence to read: "Circumstances may arise, however, where the Department may ……"
502.10 Forms and False work

D. Removal of Forms and False work 1., First paragraph; first, second, and third sentence; replace "forms" with "forms and false work"

502.11 Placing Concrete

G. Concrete Wearing Surface and Structural Slabs on Precast Superstructures Last paragraph; third sentence; replace "The temperature of the concrete shall not exceed 24° C [75° F} at the time of placement." with "The temperature of the concrete shall not exceed 24° C [75° F} at the time the concrete is placed in its final position."

502.15 Curing Concrete First paragraph; replace the first sentence with the following; "All concrete surfaces shall be kept wet with clean, fresh water for a curing period of at least 7 days after concrete placing, with the exception of vertical surfaces as provided for in Section 502.10 (D) - Removal of Forms and False work."

Second paragraph; delete the first two sentences.

Third paragraph; delete the entire paragraph which starts "When the ambient temperature…."

Fourth paragraph; delete "approved" to now read "…continuously wet for the entire curing period…"

Fifth paragraph; second sentence; change "…as soon as it is possible to do so without damaging the concrete surface." to "…as soon as possible."
Seventh paragraph; first sentence; change "…until the end of the curing period." to "…until the end of the curing period, except as provided for in Section 502.10(D) - Removal of Forms and False work."

502.19 Basis of Payment First paragraph, second sentence; add "pier nose armor" to the list of items included in the contract price for concrete.

SECTION 503
REINFORCING STEEL

503.06 Placing and Fastening Change the second paragraph, first sentence from: "All tack welding shall be done in accordance with Section 504, Structural Steel." to "All tack welding shall be done in accordance with AWS D1.4 Structural Welding Code - Reinforcing Steel."

SECTION 504
STRUCTURAL STEEL

504.09 Facilities for Inspection Add the follow as the last paragraph: "Failure to comply with the above requirements will be consider to be a denial to allow access to work by the Contractor. The Department will reject any work done when access for inspection is denied."

504.18 Plates for Fabricated Members Change the second paragraph, first sentence from: "…ASTM A 898/A 898 M…" to "…ASTM A 898/A 898 M or ASTM A 435/A 435 M as applicable and…"

504.31 Shop Assembly Add the following as the last sentence: "The minimum assembly length shall include bearing centerlines of at least two substructure units."

504.64 Non Destructive Testing-Ancillary Bridge Products and Support Structures Change the third paragraph, first sentence from "One hundred percent…" to "Twenty five percent…"

SECTION 535
PRECAST, PRESTRESSED CONCRETE SUPERSTRUCTURE

535.02 Materials Change "Steel Strand for Concrete Reinforcement" to "Steel Strand." Add the following to the beginning of the third paragraph; "Concrete shall be Class P conforming to the requirements in this section. 28 day compressive strength shall be as stated on the plans. Coarse aggregate…."

535.05 Inspection Facilities Add the follow as the last paragraph: "If the above requirements are not met, the Contractor shall be considered to be in violation of Standard Specification 104.2.5 - Right to Inspect Work. All work occurring during a violation of this specification will be rejected."

535.26 Lateral Post-Tensioning Replace the first paragraph; "A final tension…" with "Overstressing strands for setting losses cannot be accomplished for chuck to chuck lengths of 7.6 m [25 ft] and less. In such instances, refer to the Plans for all materials and methods. Otherwise, post-tensioning shall be in accordance with PCI standards and shall provide the anchorage force noted in the Plans. The applied jacking force shall be no less than 100% of the design jacking force."

SECTION 603
PIPE CULVERTS AND STORM DRAINS

603.0311 Corrugated Polyethylene Pipe for Option III Replace the Minimum Mandrel Diameter Table with the following:

Nominal Size US Customary (in)	Minimum Mandrel Diameter (in)	Nominal Size Metric (mm)	Minimum Mandrel Diameter (mm)
12	11.23	300	280.73
15	14.04	375	350.91
18	16.84	450	421.09
24	22.46	600	561.45
30	28.07	750	701.81
36	33.69	900	842.18
42	39.30	1050	982.54
48	44.92	1200	1122.90

SECTION 604
MANHOLES, INLETS, AND CATCH BASINS

604.02 Materials Add the following:

"Tops and Traps	712.07
Corrugated Metal Units	712.08
Catch Basin and Manhole Steps	712.09"

SECTION 605
UNDERDRAINS

605.05 Underdrain Outlets Make the following change:

In the first paragraph, second sentence, delete the words "metal pipe".

SECTION 606
GUARDRAIL

606.02 Materials Delete the entire paragraph which reads "The sole patented supplier of multiple mailbox…." and replace with "Acceptable multiple mailbox assemblies shall be listed on the Department's Approved Products List and shall be NCHRP 350 tested and approved."

Delete the entire paragraph which reads "Retroreflective beam guardrail delineators…." and replace with "Reflectorized sheeting for Guardrail Delineators shall meet the requirements of Section 719.01 - Reflective Sheeting. Delineators shall be fabricated from high-impact, ultraviolet and weather resistant thermoplastic.

606.09 Basis of Payment First paragraph; delete the second and third sentence in their entirety and replace with "Butterfly-type guardrail reflectorized delineators shall be mounted on all W-beam guardrail at an interval of every 10 posts [62.5 ft] on tangents sections and every 5 posts [31.25 ft] on curved sections as directed by the Resident. On divided highways, the delineators shall be yellow on the left hand side and silver/white on the right hand side. On two-way roadways, the delineators shall be silver/white on the right hand side. All delineators shall have retroreflective sheeting applied to only the traffic facing side. Reflectorized guardrail delineators will not be paid for directly, but will be considered incidental to the guardrail items."

SECTION 609
CURB

609.04 Bituminous Curb f., Delete the requirement "Color Natural (White)"

SECTION 615
LOAM

615.02 Materials Make the following change:

Organic Content	Percent by Volume
Humus	"5% - 10%", as determined by Ignition Test

SECTION 618
SEEDING

618.01 Description Change the first sentence to read as follows: "This work shall consist of furnishing and applying seed ….." Also remove ",and cellulose fiber mulch" from 618.01(a).
618.03 Rates of Application In 618.03(a), remove the last sentence and replace with the following: "These rates shall apply to Seeding Method 2, 3, and Crown Vetch."

In 618.03(c) "1.8 kg [4 lb]/unit." to "1.95 kg [4 lb]/unit."

618.09 Construction Method In 618.09(a) 1, sentence two, replace "100 mm [4 in]" with "25 mm [1 in] (Method 1 areas) and 50 mm [2 in] (Method 2 areas)"

618.15 Temporary Seeding Change the Pay Unit from Unit to Kg [lb].

SECTION 620
GEOTEXTILES

620.03 Placement Section (c)

Title: Replace "Non-woven" in title with "Erosion Control".
First Paragraph: Replace first word "Non-woven" with "Woven monofilament".
Second Paragraph: Replace second word "Non-woven" with "Erosion Control".

620.07 Shipment, Storage, Protection and Repair of Fabric Section (a)

Replace the second sentence with the following: "Damaged geotextiles, as identified by the Resident, shall be repaired immediately."

620.09 Basis of Payment

Pay Item 620.58: Replace "Non-woven" with "Erosion Control"
Pay Item 620.59: Replace "Non-woven" with "Erosion Control"

SECTION 621
LANDSCAPING

621.0036 Establishment Period In paragraph 4 and 5, change "time of Final Acceptance" to "end of the period of establishment". In Paragraph 7, change "Final Acceptance date" to ""end of the period of establishment" and change "date of Final Acceptance" to "end of the period of establishment".

SECTION 626
HIGHWAY SIGNING

626.034 Concrete Foundations Add to the following to the end of the second paragraph: "Pre-cast and cast-in-place foundations shall be warranteed against leaning and corrosion for two years after the project is completed. If the lean is greater than 2 degrees from normal or the foundation is spalling within the first two years, the Contractor shall replace the foundation at no extra cost."

SECTION 627
PAVEMENT MARKINGS

627.10 Basis of Payment Add to the following to the end of the third paragraph: "If allowed by Special Provision, the Contractor may utilize Temporary Bi-Directional Yellow and White(As required) Delineators as temporary pavement marking lines and paid for at the contract lump sum price. Such payment will include as many applications as required and removal."

SECTION 637
DUST CONTROL

637.06 Basis of Payment Add the following after the second sentence of the third paragraph: "Failure by the Contractor to follow Standard Specification or Special Provision - Section 637

and/or the Contractor's own Soil Erosion and Pollution Control Plan concerning Dust Control and/or the Contractor's own Traffic Control Plan concerning Dust Control and/or visible evidence of excessive dust problems, as determined by the Resident, will result in a reduction in payment, computed by reducing the Lump Sum Total by 5% per occurrence per day. The Department's Resident or any other representative of the Department reserves the right to suspend the work at any time and request a meeting to discuss violations and remedies. The Department shall not be held responsible for any delay in the work due to any suspension under this item. Additional penalties may also be assessed in accordance with Special Provision 652 - Work Zone Traffic Control and Standard Specification 656 - Temporary Soil Erosion and Water Pollution Control."

SECTION 639
ENGINEERING FACILITIES

639.04 Field Offices Change the forth to last paragraph from: "The Contractor shall provide a fully functional desktop copier…" to "….desktop copier/scanner…"

SECTION 652
MAINTENANCE OF TRAFFIC

652.2.3 Flashing Arrow Board Delete the existing 5 paragraphs and replace with the following: Flashing Arrow Panels (FAP) must be of a type that has been submitted to AASHTO's National Transportation Product Evaluation Program (NTPEP) for evaluation and placed on the Maine Department of Transportations' Approved Products List of Portable Changeable Message Signs & Flashing Arrow Panels.

FAP units shall meet requirements of the current Manual on Uniform Traffic Control Devices (MUTCD) for Type "C" panels as described in Section 6F.56 - Temporary Traffic Control Devices. An FAP shall have matrix of a minimum of 15 low-glare, sealed beam, Par 46 elements capable of either flashing or sequential displays as well as the various operating modes as described in the MUTCD, Chapter 6-F. If an FAP consisting of a bulb matrix is used, each element should be recess-mounted or equipped with an upper hood of not less than 180 degrees. The color presented by the elements shall be yellow.

FAP elements shall be capable of at least a 50 percent dimming from full brilliance. Full brilliance should be used for daytime operation and the dimmed mode shall be used for nighttime operation. FAP shall be at least 2.4 M x 1.2 M [96" x 48"] and finished in non-reflective black. The FAP shall be interpretable for a distance not less than 1.6 km [1 mile].

Operating modes shall include, flashing arrow, sequential arrow, sequential chevron, flashing double arrow, and flashing caution. In the three arrow signals, the second light from the arrow point shall not operate.

The minimum element on-time shall be 50 percent for the flashing mode, with equal intervals of 25 percent for each sequential phase. The flashing rate shall be not less than 25 nor more than 40 flashes per minute. All on-board circuitry shall be solid state.

Primary power source shall be 12 volt solar with a battery back-up to provide continuous

operation when failure of the primary power source occurs, up to 30 days with fully charged batteries. Batteries must be capable of being charged from an onboard 110 volt AC power source and the unit shall be equipped with a cable for this purpose.

Controller and battery compartments shall be enclosed in lockable, weather-tight boxes.

The FAP shall be mounted on a pneumatic-tired trailer or other suitable support for hauling to various locations, as directed. The minimum mounting height of an arrow panel should be 2.1 M [7 feet] from the roadway to the bottom of the panel.

The face of the trailer shall be delineated on a permanent basis by affixing retro-reflective material, known as conspicuity material, in a continuous line as seen by oncoming drivers.

A portable changeable message sign may be used to simulate an arrow panel display."

652.2.4 Other Devices Delete the last paragraph and add the following:
"652.2.5 Portable Changeable Message Sign Trailer mounted Portable Changeable Message Signs (PCMS) must be of a type that has been submitted to AASHTO's National Transportation Product Evaluation Program (NTPEP) for evaluation and placed on the Maine Department of Transportations' Approved Products List of Portable Changeable Message Signs & Flashing Arrow Panels. The PCMS unit shall meet or exceed the current specifications of the Manual on Uniform Traffic Control Devices (MUTCD), 6F.55.

The front face of the sign should be covered with a low-glare protective material. The color of the LED elements shall be amber on a black background. The PCMS should be visible from a distance of 0.8 km [0.5 mile] day and night and have a minimum 15º viewing angle. Characters must be legible from a distance of at least 200 M [650 feet].

The message panel should have adjustable display rates (minimum of 3 seconds per phase), so that the entire message can be read at least twice at the posted speed, the off-peak 85th-percentile speed prior to work starting, or the anticipated operating speed. Each message shall consist of either one or two phases. A phase shall consist of up to eight characters per line. The unit must be capable of displaying at least three lines of text with eight characters per line. Each character shall be 457 mm [18"] high. Each character module shall use at least a five wide and seven high pixel matrix. The text of the messages shall not scroll or travel horizontally or vertically across the face of the sign.

Units shall automatically adjust their brightness under varying light conditions to maintain legibility.

The control system shall include a display screen upon which messages can be reviewed before being displayed on the message sign. The control system shall be capable of maintaining memory when power is unavailable. Message must be changeable with either a notebook computer or an on-board keypad. The controller shall have the capability to store a minimum of 200 user-defined and 200 pre-programmed messages. Controller and battery compartments shall be enclosed in lockable, weather-tight boxes.

PCMS units shall have the capability of being made programmable by means of wireless communications. PCMS units shall also be fully capable of having an on-board radar system installed if required for a particular application.

PCMS' primary power source shall be solar with a battery back-up to provide continuous operation when failure of the primary power source occurs. Batteries must be capable of being charged from a 110 volt AC power source. The unit must also be capable of being operated solely from a 110 volt AC power source and be equipped with a cable for this purpose.

The PCMS shall be mounted on a trailer in such a way that the bottom of the message sign panel shall be a minimum of 2.1 M [7 ft] above the roadway in urban areas and 1.5 M [5 ft] above the roadway in rural areas when it is in the operating mode. PCMS trailers should be of a heavy duty type with a 51 mm [2"] ball hitch and a minimum of four leveling jacks (at each corner). The sign shall be capable of being rotated 360° relative to the trailer. The face of the trailer shall be delineated on a permanent basis by affixing retro-reflective material, known as conspicuity material, in a continuous line as seen by oncoming drivers."

652.3.3 Submittal of Traffic Control Plan In item e. change "A list of all certified flaggers…" to "A list of all the Contractor's certified flaggers…"

In the last paragraph add the following as the second sentence: "The Department will review and provide comments to the Contractor within 14 days of receipt of the TCP."

652.3.5 Installation of Traffic Control Devices In the first paragraph, first sentence; change "Signs shall be erected…" to "Portable signs shall be erected.." In the third sentence; change "Signs must be erected so that the sign face…" to "Post-mounted signs must also be erected so that the sign face…"

652.4 Flaggers Replace the first paragraph with the following; "The Contractor shall furnish flaggers as required by the TCP or as otherwise specified by the Resident. All flaggers must have successfully completed a flagger test approved by the Department and administered by a Department-approved Flagger-Certifier who is employing that flagger. All flaggers must carry an official certification card with them while flagging that has been issued by their employer. Flaggers shall wear safety apparel meeting ANSI 107-1999 Class 2 risk exposure and clearly identify the wearer as a person, shall be visible at a minimum distance of 300 m [1000 ft], and shall wear a hardhat with retroreflectivity. For nighttime conditions, Class 3 apparel should be considered, retroreflective or flashing SLOW/STOP paddles shall be used, and except in emergency situations the flagger station shall be illuminated to assure visibility."

Second paragraph, first sentence; change "…have sufficient distance to stop before entering the workspace." to "…have sufficient distance to stop at the intended stopping point." Third sentence; change "At a spot obstruction…" to "At a spot obstruction with adequate sight distance,…"

Fourth paragraph, delete and replace with "Flaggers shall be provided as a minimum, a 10 minute break, every 2 hours and a 30 minute or longer lunch period away from the work station. Flaggers may only receive 1 unpaid break per day; all other breaks must be paid.

Sufficient certified flaggers shall be available onsite to provide for continuous flagging operations during break periods. Breaker flaggers will not be paid for separately, but shall be considered incidental to the appropriate pay item."

652.8.2 Other Items Replace the last paragraph with the following: "There will be no payment made under any 652 pay items after the expiration of the adjusted total contract time."

SECTION 653
POLYSTYRENE PLASTIC INSULATION

653.05 Placing Backfill In the second sentence; change "…shall be not less than 150 mm [6 in] loose measure." to "…shall be not less than 250 mm [10 in] loose measure." In the third sentence; change "…crawler type bulldozer of not more than 390 kg/m^2 [80 lb/ft^2] ground contact pressure…" to "…crawler type bulldozer of not more than 4875 kg/m^2 [2000 lb/ft^2] ground contact pressure…"

653.06 Compaction In the last sentence; change "…not more than 390 kg/m^2 [80 lb/ft^2] ground contact…" to "…not more than 4875 kg/m^2 [2000 lb/ft^2] ground contact…"

SECTION 656
TEMPORARY SOIL EROSION AND WATER POLLUTION CONTROL

656.5.1 If Pay Item 656.75 Provided Replace the second paragraph with the following: "Failure by the Contractor to follow Standard Specification or Special Provision - Section 656 and/or the Contractor's own Soil Erosion and Pollution Control Plan will result in a reduction in payment, computed by reducing the Lump Sum Total by 5% per occurrence per day. The Department's Resident or any other representative of the Department reserves the right to suspend the work at any time and request a meeting to discuss violations and remedies. The Department shall not be held responsible for any delay in the work due to any suspension under this item."

SECTION 701
STRUCTURAL CONCRETE RELATED MATERIALS

701.10 Fly Ash - Chemical Requirements Change all references from "ASTM C311" to "ASTM C114".

SECTION 703
AGGREGATES

703.05 Aggregate for Sand Leveling Change the percent passing the 9.5 mm [3/8 in] sieve from "85 – 10" to "85 – 100"

703.06 Aggregate for Base and Subbase Delete the first paragraph: "The material shall have…" and replace with "The material shall have a minimum degradation value of 15 as determined by Washington State DOT Test Method T113, Method of Test for Determination of Degradation Value (March 2002 version), except that the reported degradation value will be

the result of testing a single specimen from that portion of a sample that passes the 12.5 mm [½ in] sieve and is retained on the 2.00 mm [No. 10] sieve, minus any reclaimed asphalt pavement used."

703.07 Aggregates for HMA Pavements Delete the forth paragraph: "The composite blend shall have…" and replace with "The composite blend, minus any reclaimed asphalt pavement used, shall have a Micro-Deval value of 18.0 or less as determined by AASHTO T 327. In the event the material exceeds the Micro Deval limit, a Washington Degradation test shall be performed. The material shall be acceptable if it has a value of 30 or more as determined by Washington State DOT Test Method T 113, Method of Test for Determination of Degradation Value (March 2002 version) except that the reported degradation value will be the result of testing a single composite specimen from that portion of the sample that passes the 12.5mm [1/2 inch] sieve and is retained on the 2.00mm [No 10] sieve, minus any reclaimed asphalt pavement used."

703.18 Common Borrow Replace the first paragraph with the following: "Common borrow shall consist of earth, suitable for embankment construction. It shall be free from frozen material, perishable rubbish, peat, and other unsuitable material including material currently or previously contaminated by chemical, radiological, or biological agents unless the material is from a DOT project and authorized by DEP for use."

703.22 Underdrain Backfill Material Change the first paragraph from "…for Underdrain Type B…" to "…for Underdrain Type B and C…"

SECTION 706
NON-METALLIC PIPE

706.06 Corrugated Polyethylene Pipe for Underdrain, Option I and Option III Culvert Pipe Change the first sentence from "…300 mm diameters to 900 mm" to "…300 mm diameters to 1200 mm" Delete, in it's entirety, the last sentence which begins "This pipe and resins…" and replace with the following; "The manufacturing plants of polyethylene pipe shall be certified by the Eastern States Consortium. Polyethylene pipe shall be accepted based on third party certification by the AASHTO's National Transportation Product Evaluation Program."

SECTION 709
REINFORCING STEEL AND WELDED STEEL WIRE FABIC

709.03 Steel Strand Change the second paragraph from "…shall be 12mm [½ inch] AASHTO M203M/M203 (ASTM A416/A416M)…" to "…shall be 15.24 mm [0.600 inch] diameter AASHTO M203 (ASTM A416)…"

SECTION 710
FENCE AND GUARDRAIL

710.03 Chain Link Fabric Add the following sentence: "Chain Link fabric for PVC coated shall conform to the requirements of AASHTO M181, Type IV-Class B."

710.07 Guardrail Posts Section b. change "…AASHTO M183/M183M…" to "…AASHTO M 270M/M 270 Grade 250 (36)…"

SECTION 712
MISCELLANEOUS HIGHWAY MATERIALS

712.06 Precast Concrete Units In the first paragraph, change "…ASTM C478M…" to "…AASHTO M199…" Delete the second paragraph and replace with the following; "Approved structural fibers may be used as a replacement of 6 x 6 #10 gauge welded wire fabric when used at an approved dosage rate for the construction of manhole and catch basin units. The material used shall be one of the products listed on the Maine Department of Transportation's Approved Product List of Structural Fiber Reinforcement." Delete the fifth paragraph and replace with the following; "The concrete mix design shall be approved by the Department. Concrete shall contain 6% air content, plus or minus 1½% tolerance when tested according to AASHTO T152. All concrete shall develop a minimum compressive strength of 28 MPa [4000 psi] in 28 days when tested according to AASHTO T22. The absorption of a specimen, when tested according to AASHTO T280, Test Method "A", shall not exceed nine percent of the dry mass."

Add the following:

"712.07 Tops, and Traps These metal units shall conform to the plan dimensions and to the following specification requirements for the designated materials.

Gray iron or ductile iron castings shall conform to the requirements of AASHTO M306 unless otherwise designated.

712.08 Corrugated Metal Units The units shall conform to plan dimensions and the metal to AASHTO M36/M36M. Bituminous coating, when specified, shall conform to AASHTO M190 Type A.

712.09 Catch Basin and Manhole Steps Steps for catch basins and for manholes shall conform to ASTM C478M [ASTM C478], Section 13 for either of the following material:

(a) Aluminum steps-ASTM B221M, [ASTM B211] Alloy 6061-T6 or 6005-T5.

(b) Reinforced plastic steps Steel reinforcing bar with injection molded plastic coating copolymer polypropylene. Polypropylene shall conform to ASTM D 4101.

712.23 Flashing Lights Flashing Lights shall be power operated or battery operated as specified.

(a) Power operated flashing lights shall consist of housing, adapters, lamps, sockets, reflectors, lens, hoods and other necessary equipment designed to give clearly visible signal indications within an angle of at least 45 degrees and from 3 to 90 m [10 to 300 ft] under all light and atmospheric conditions.

Two circuit flasher controllers with a two-circuit filter capable of providing alternate flashing operations at the rate of not less than 50 nor more than 60 flashes per minute shall be provided.

The lamps shall be 650 lumens, 120 volt traffic signal lamps with sockets constructed to properly focus and hold the lamp firmly in position.
The housing shall have a rotatable sun visor not less than 175 mm [7 in] in length designed to shield the lens.

Reflectors shall be of such design that light from a properly focused lamp will reflect the light rays parallel. Reflectors shall have a maximum diameter at the point of contact with the lens of approximately 200 mm [8 in].
The lens shall consist of a round one-piece convex amber material which, when mounted, shall have a visible diameter of approximately 200 mm [8 in]. They shall distribute light and not diffuse it. The distribution of the light shall be asymmetrical in a downward direction. The light distribution of the lens shall not be uniform, but shall consist of a small high intensity portion with narrow distribution for long distance throw and a larger low intensity portion with wide distribution for short distance throw. Lenses shall be marked to indicate the top and bottom of the lens.

(b) Battery operated flashing lights shall be self- illuminated by an electric lamp behind the lens. These lights shall also be externally illuminated by reflex-reflective elements built into the lens to enable it to be seen by reflex-reflection of the light from the headlights of oncoming traffic. The batteries must be entirely enclosed in a case. A locking device must secure the case. The light shall have a flash rate of not less than 50 nor more than 60 flashes per minute from minus 30 °C [minus 20 °F] to plus 65 °C [plus 150 °F]. The light shall have an on time of not less than 10 percent of the flash cycle. The light beam projected upon a surface perpendicular to the axis of the light beam shall produce a lighted rectangular projection whose minimum horizontal dimension shall be 5 degrees each side of the horizontal axis. The effective intensity shall not have an initial value greater than 15.0 candelas or drop below 4.0 candelas during the first 336 hours of continuous flashing. The illuminated lens shall appear to be uniformly bright over its entire illuminated surface when viewed from any point within an angle of 9 degrees each side of the vertical axis and 5 degrees each side of the horizontal axis. The lens shall not be less than 175 mm [7 in] in diameter including a reflex-reflector ring of 13 mm [½ in] minimum width around the periphery. The lens shall be yellow in color and have a minimum relative luminous transmittance of 0.440 with a luminance of 2854° Kelvin. The lens shall be one-piece construction. The lens material shall be plastic and meet the luminous transmission requirements of this specification. The case containing the batteries and circuitry shall be constructed of a material capable of withstanding abuse equal to or greater than 1.21 mm thick steel [No. 18 U.S. Standard Gage Steel]. The housing and the lens frame, if of metal shall be properly cleaned, degreased and pretreated to promote adhesion. It shall be given one or more coats of enamel which, when dry shall completely obscure the metal. The enamel coating shall be of such quality that when the coated case is struck a light blow with a sharp tool, the paint will not chip or crack and if scratched with a knife will not powder. The case shall be so constructed and closed as to exclude moisture that would affect the proper operation of light. The

case shall have a weep hole to allow the escape of moisture from condensation. Photoelectric controls, if provided, shall keep the light operating whenever the ambient light falls below 215 lx [20 foot candles]. Each light shall be plainly marked as to the manufacturer's name and model number.

If required by the Resident, certification as to conformance to these specifications shall be furnished based on results of tests made by an independent testing laboratory. All lights are subject to random inspection and testing. All necessary random samples shall be provided to the Resident upon request without cost to the Department. All such samples shall be returned to the Contractor upon completion of the tests.

712.32 Copper Tubing Copper tubing and fittings shall conform to the requirements of ASTM B88M Type A [ASTM B88, Type K] or better.

712.33 Non-metallic Pipe, Flexible Non-metallic pipe and pipe fittings shall be acceptable flexible pipe manufactured from virgin polyethylene polymer suitable for transmitting liquids intended for human or animal consumption.

712.34 Non-metallic Pipe, Rigid Non-metallic pipe shall be Schedule 40 polyvinylchloride (PVC) that meets the requirement of ASTM D1785. Fittings shall be of the same material.

712.341 Metallic Pipe Metallic pipe shall be ANSI, Standard B36.10, Schedule 40 steel pipe conforming to the requirements of ASTM A53 Types E or S, Grade B. End plates shall be steel conforming to ASTM A36/A36M.

Both the sleeve and end plates shall be hot dip galvanized. Pipe sleeve splices shall be welded splices with full penetration weld before galvanizing.

712.35 Epoxy Resin Epoxy resin for grouting or sealing shall consist of a mineral filled thixotropic, flexible epoxy resin having a pot life of approximately one hour at 10°C [50°F]. The grout shall be an approved product suitable for cementing steel dowels into the preformed holes of curb inlets and adjacent curbing. The sealant shall be an approved product, light gray in color and suitable for coating the surface.

712.36 Bituminous Curb The asphalt cement for bituminous curb shall be of the grade required for the wearing course, or shall be Viscosity Grade AC-20 meeting the current requirements of Subsection 702.01 Asphalt Cement. The aggregate shall conform to the requirements of Subsection 703.07. The coarse aggregate portion retained on the 2.36 mm [No. 8] sieve may be either crushed rock or crushed gravel.

The mineral constituents of the bituminous mixture shall be sized and graded and combined in a composite blend that will produce a stable durable curbing with an acceptable texture.
Bituminous material for curb shall meet the requirements of Section 403 - Hot Bituminous Pavement.

712.37 Precast Concrete Slab Portland cement concrete for precast slabs shall meet the requirements of Section 502 - Structural Concrete, Class A.

The slabs shall be precast to the dimension shown on the plans and cross section and in accordance with the Standard Detail plans for Concrete Sidewalk Slab. The surface shall be finished with a float finish in accordance with Subsection 502.14(c). Lift devices of sufficient strength to hold the slab while suspended from cables shall be cast into the top or back of the slab.

712.38 Stone Slab Stone slabs shall be of granite from an acceptable source, hard, durable, predominantly gray in color, free from seams which impair the structural integrity and be of smooth splitting character. Natural color variations characteristic of the deposit will be permitted. Exposed surfaces shall be free from drill holes or indications of drill holes. The granite slabs in any one section of backslope must be all the same finish.

The granite slabs shall be scabble dressed or sawed to an approximately true plane having no projections or depressions over 13 mm [½ in] under a 600 mm [2 ft] straightedge or over 25 mm [1 in] under a 1200 mm [4 ft] straightedge. The arris at the intersection of the top surface and exposed front face shall be pitched so that the arris line is uniform throughout the length of the installed slabs. The sides shall be square to the exposed face unless the slabs are to be set on a radius or other special condition which requires that the joints be cut to fit, but in any case shall be so finished that when the stones are placed side by side no space more than 20 mm [3/4 in] shall show in the joint for the full exposed height.

Liftpin holes in all sides will be allowed except on the exposed face.

SECTION 717
ROADSIDE IMPROVEMENT MATERIAL

717.03 C. Method #3 - Roadside Mixture #3 Change the seed proportions to the following:

Crown Vetch	25%
Perennial Lupine	25%
Red Clover	12.5%
Annual Rye	37.5%

717.05 Mulch Binder Change the third sentence to read as follows:

"Paper fiber mulch may be used as a binder at the rate of 2.3 kg/unit [5 lb/unit]."

SECTION 720
STRUCTURAL SUPPORTS FOR HIGHWAY SIGNS, LUMINAIRES, AND TRAFFIC SIGNALS

720.08 U-Channel Posts Change the first sentence from "…, U-Channel posts…" to "…, Rib Back U-Channel posts…"

SECTION 722
GEOTEXTILES

722.01 Stabilization/Reinforcement Geotextile Add the following to note #3; "The strengths specified in the columns labeled"<50%" and "≥ 50%" refer to the elongation at which the geotextile material was tested. For example; if a fabric is tested at 15% elongation then it must meet or exceed the minimum strength shown in the "<50%" column. Submittals must include the percent elongation at which the material was tested."

722.02 Drainage Geotextile Add the following to note #3; "The strengths specified in the columns labeled"<50%" and "≥ 50%" refer to the elongation at which the geotextile material was tested. For example; if a fabric is tested at 15% elongation then it must meet or exceed the minimum strength shown in the "<50%" column. Submittals must include the percent elongation at which the material was tested."

722.01 Erosion Control Geotextile Add the following note to Elongation in the Mechanical Property Table; "The strengths specified in the columns labeled"<50%" and "≥ 50%" refer to the elongation at which the geotextile material was tested. For example; if a fabric is tested at 15% elongation then it must meet or exceed the minimum strength shown in the "<50%" column. Submittals must include the percent elongation at which the material was tested."

APPENDIX A TO DIVISION 100

SECTION 1 - BIDDING PROVISIONS

A. Federally Required Certifications By signing and delivering a Bid, the Bidder certifies as provided in all certifications set forth in this Appendix A - Federal Contract Provisions Supplement including:

- Certification Regarding No Kickbacks to Procure Contract as provided on this page 1 below.
- Certification Regarding Non-collusion as provided on page 1 below.
- Certification Regarding Non-segregated Facilities as provided by FHWA Form 1273, section III set forth on page 21 below.
- "Certification Regarding Debarment, Suspension, Ineligibility and Voluntary Exclusion" as provided by FHWA Form 1273, section XI set forth on page 32 below.
- "Certification Regarding Use of Contract Funds for Lobbying" as provided by FHWA Form 1273, section XII set forth on page 35 below.

Unless otherwise provided below, the term "Bidder", for the purposes of these certifications, includes the Bidder, its principals, and the person(s) signing the Bid. Upon execution of the Contract, the Bidder (then called the Contractor) will again make all the certifications indicated in this paragraph above. Upon execution of the Contract, the Bidder (then called the Contractor) will again make all the certifications indicated in this paragraph above.

CERTIFICATION REGARDING NO KICKBACKS TO PROCURE CONTRACT Except expressly stated by the Bidder on sheets submitted with the Bid (if any), the Bidder hereby certifies, to the best of its knowledge and belief, that it has not:

(A) employed or retained for a commission, percentage, brokerage, contingent fee, or other consideration, any firm or person (other then a bona fide employee working solely for me) to solicit or secure this contract;

(B) agreed, as an express or implied condition for obtaining this contract, to employ or retain the services of any firm or person in connection with carrying out the contract, or;

C) paid, or agreed to pay, to any firm, organization, or person (other than a bona fide employee working solely for me) any fee, contribution, donation, or consideration of any kind for, or in connection with, procuring or carrying out the contract;

By signing and submitting a Bid, the Bidder acknowledges that this certification is to be furnished to the Maine Department of Transportation and the Federal Highway Administration, U.S. Department of Transportation in connection with this contract in anticipation of federal aid highway funds and is subject to applicable state and federal laws, both criminal and civil.

CERTIFICATION REGARDING NONCOLLUSION Under penalty of perjury as provided by federal law (28 U.S.C. §1746), the Bidder hereby certifies, to the best of its knowledge and belief, that:

the Bidder has not, either directly or indirectly, entered into any agreement, participated in any collusion, or otherwise taken any action in restraint of competitive bidding in connection with the Contract.

For a related provisions, see Section 102.7.2 (C) of the Standard Specifications - "Effects of Signing and Delivery of Bids" - "Certifications", Section 3 of this Appendix A entitled "Other Federal Requirements" including section XI - "Certification Regarding Debarment, Suspension, Ineligibility, and Voluntary Exclusion" and section XII. - "Certification Regarding Use of Contract Funds for Lobbying."

****

B. Bid Rigging Hotline To report bid rigging activities call: **1-800-424-9071**

The U.S. Department of Transportation (DOT) operates the above toll-free "hotline" Monday through Friday, 8:00 a.m. to 5:00 p.m., eastern time. Anyone with knowledge of possible bid rigging, bidder collusion, or other fraudulent activities should use the "hotline" to report such activities.

The "hotline" is part of the DOT's continuing effort to identify and investigate highway construction contract fraud and abuse and is operated under the direction of the DOT Inspector General. All information will be treated confidentially and caller anonymity will be respected.

****

SECTION 2 - FEDERAL EEO AND CIVIL RIGHTS REQUIREMENTS

Unless expressly otherwise provided in the Bid Documents, the provisions contained in this Section 2 of this "Federal Contract Provisions Supplement" are hereby incorporated into the Bid Documents and Contract.

A. Nondiscrimination & Civil Rights - Title VI The Contractor and its subcontractors shall not discriminate on the basis of race, color, national origin, or sex in the performance of this Contract. The Contractor shall carry out applicable requirements of 49 CFR Part 26 in the award and administration of DOT assisted contracts. Failure by the Contractor to carry out these requirements is a material breach of this contract, which may result in the termination of this contract or such other remedy as the Department deems appropriate. The Contractor and subcontractors shall comply with Title VI of the Civil Rights Act of 1964, as amended, and with all State of Maine and other Federal Civil Rights laws.

For related provisions, see Subsection B - "Nondiscrimination and Affirmative Action - Executive Order 11246" of this Section 2 and Section 3 - Other Federal Requirements of this "Federal Contract Provisions Supplement" including section II - "Nondiscrimination" of the "Required Contract Provisions, Federal Aid Construction Contracts", FHWA-1273.

B. Nondiscrimination and Affirmative Action - Executive Order 11246 Pursuant to Executive Order 11246, which was issued by President Johnson in 1965 and amended in 1967 and 1978, this Contract provides as follows.

The Contractor shall take specific affirmative actions to ensure equal employment opportunity. The evaluation of the Contractor's compliance with these specifications shall be based upon its efforts to achieve maximum results from its actions. The Contractor shall

document these efforts fully, and shall implement affirmative action steps at least as extensive as the following:

1. Ensure and maintain a working environment free of harassment, intimidations, and coercion at all sites, and in all facilities at which the Contractor's employees are assigned to work. The Contractor, where possible, will assign two or more women to each construction project. The Contractor shall specifically ensure that all forepersons, superintendents, and other on-site supervisory personnel are aware of and carry out the Contractor's obligation to maintain such a working environment, with specific attention to minority or female individuals working at such sites or in such facilities.

2. Establish and maintain a current list of minority and female recruitment sources, provide written notification to minority and female recruitment sources and to community organizations when the Contractor or its union have employment opportunities available, and to maintain a record of the organization's responses.

3. Maintain a current file of the names, addresses and telephone numbers of each minority and female off-the-street applicant and minority or female referral from a union, a recruitment source or community organization and of what action was taken with respect to each such individual. If such individual was sent to the union hiring hall for referral and was not referred back to the Contractor by the union or, if referred, not employed by the Contractor, this shall be documented in the file with the reason therefore, along with whatever additional actions the Contractor may have taken.

4. Provide immediate written notification to the Department's Civil Rights Office when the union or unions with which the Contractor has a collective bargaining agreement has not referred to the Contractor a minority person or woman sent by the Contractor, or when the Contractor has other information that the union referral process has impeded the Design-Builder's efforts to meet its obligations.

5. Develop on-the-job training opportunities and/or participate in training programs for the area which expressly include minorities and women, including upgrading programs and apprenticeship and trainee programs relevant to the Contractor's employment needs, especially those programs funded or approved by the Department of Labor. The Contractor shall provide notice of these programs to the sources compiled under B above.

6. Disseminate the Contractor's EEO policy by providing notice of the policy to unions and training programs and requesting their cooperation in assisting the Contractor in meeting its EEO obligation; by including it in any policy manual and collective bargaining agreement; by publicizing it in the company newspaper, annual report, etc.; by specific review of the policy with all management personnel and with all minority and female employees at least once a year; and by posting the company EEO policy on bulletin boards accessible to all employees at each location where construction work is performed.

7. Review, at least annually, the company's EEO policy and affirmative action obligations under these specifications with all employees having any responsibility for hiring, assignment, layoff, termination, or other employment decisions including specific review

of these items with on-site supervisory personnel such as Superintendents, General Forepersons, etc., prior to the initiation of construction work at any job site. A written record shall be made and maintained identifying the time and place of these meetings, persons attending, subject matter discussed, and disposition of the subject matter.

8. Disseminate the Contractor's EEO policy externally by including it in any advertising in the news media, specifically including minority and female news media, and providing written notification to and discussing the Contractor's EEO policy with other Contractor's and Subcontractors with whom the Contractor does or anticipates doing business.

9. Direct its recruitment efforts, both orally and written to minority, female and community organizations, to schools with minority and female students and to minority and female recruitment and training organizations serving the Contractor's recruitment area and employment needs. Not later that one month prior to the date for the acceptance of applications for apprenticeship or other training by any recruitment source, the Contractor shall send written notification to organizations such as the above describing the openings, screenings, procedures, and test to be used in the selection process.

10. Encourage present minority and female employees to recruit other minority persons and women and, where reasonable, provide after school, summer and vacation employment to minority and female youth, both on the site and in other areas of a Contractor's workforce.

11. Validate all tests and other selection requirements.

12. Conduct, at least annually, an inventory and evaluation at least of all minority and female personnel for promotional opportunities and encourage these employees to seek or to prepare for, through appropriate training, etc., such opportunities.

13. Ensure that seniority practices, job classifications, work assignments and other personnel practices, do not have a discriminatory effect by continually monitoring all personnel and employment related activities to ensure that the EEO policy and the Contractor's obligations under these specifications are being carried out.

14. Ensure that all facilities and company activities are non segregated except that separate or single-user toilet and necessary changing facilities shall be provided to assure privacy between the sexes.

15. Document and maintain a record of all solicitations of offers for subcontracts from minority and female construction Contractor's and suppliers, including circulation of solicitations to minority and female Contractor associations and other business associations.

16. Conduct a review, at least annually, of all supervisors' adherence to and performance under the Contractor's EEO policies and affirmative action obligations.

C. Goals for Employment of Women and Minorities Per Executive Order 11246, craft tradesperson goals are 6.9% women and .5% minorities employed. However, goals may be adjusted upward at the mutual agreement of the Contractor and the Department. Calculation of these percentages shall not include On-the-Job Training Program trainees, and shall not include clerical or field clerk position employees.

For a more complete presentation of requirements for such Goals, see the federally required document "Goals for Employment of Females and Minorities" set forth in the next 6 pages below.

****

Start of GOALS FOR EMPLOYMENT OF FEMALES AND MINORITIES
Federally Required Contract Document

§60-4.2 Solicitations

(d) The following notice shall be included in, and shall be part of, all solicitations for offers and bids on all Federal and federally assisted construction contracts or subcontracts in excess of $10,000 to be performed in geographical areas designated by the Director pursuant to §60-4.6 of this part (see 41 CFR 60-4.2(a)):

Notice of Requirement for Affirmative Action to Ensure Equal Opportunity (Executive Order 11246)

1. The Offeror's or bidder's attention is called to the "Equal Opportunity Clause" and the "Standard Federal Equal Employment Specifications" set forth herein.

2. The goals and timetables for minority and female participation, expressed in percentage terms for the Contractor's aggregate work force in each trade on all construction work in the covered area, are as follows:

Goals for female participation in each trade 6.9%

Goals for minority participation for each trade
Maine
001 Bangor, ME 0.8%
Non-SMSA Counties (Aroostook, Hancock, Penobscot, Piscataquis, Waldo, Washington)

002 Portland-Lewiston, ME
SMSA Counties: 4243 Lewiston-Auburn, ME 0.5%
(Androscoggin)

6403 Portland, ME 0.6%
(Cumberland, Sagadahoc)

Non-SMSA Counties: 0.5%
(Franklin, Kennebec, Knox, Lincoln, Oxford, Somerset, York)

These goals are applicable to all the Contractor's construction work (whether or not it is Federal or federally assisted) performed in the covered area. If the contractor performs construction work in a geographical area located outside of the covered area, it shall apply the goals established for such geographical area where the work is actually performed. With regard to this second area, the contractor also is subject to the goals for both its federally involved and non federally involved construction.

The contractor's compliance with the Executive Order and the regulations in 41 CFR Part 60-4 shall be based on its implementation of the Equal Opportunity Clause, specific affirmative action obligations required by the specifications set forth in 41 CFR 60-4.3(a), and its efforts to meet the goals. The hours of minority and female employment and training must be substantially uniform throughout the length of the contract, and in each trade, and the contractor shall make a good faith effort to employ minorities and women evenly on each of its projects. The transfer of minority or female employees or trainees from Contractor to Contractor or from project to project for the sole purpose of meeting the Contractor's goals shall be in violation of the contract, the Executive Order and the regulations in 41 CFR Part 60-4. Compliance with the goals will be measured against the total work hours performed.

3. The Contractor shall provide written notification to the Director of the Office of Federal Contract Compliance Programs within 10 working days of award of any construction subcontract in excess of $10,000 at any tier for construction work under the contract resulting from this solicitation. The notification shall list the name, address and telephone number of the subcontractor, employer identification number of the subcontractor, estimated dollar amount of the subcontract; estimated started and completion dates of the subcontract; and the geographical area in which the subcontract is to be performed.

4. As used in this Notice, and in the Contract resulting from this solicitation, the "covered area" is (insert description of the geographical areas where the contract is to be performed giving the state, county and city, if any).

STANDARD FEDERAL EQUAL EMPLOYMENT OPPORTUNITY CONSTRUCTION CONTRACT SPECIFICATIONS (EXECUTIVE ORDER 11246)

1. As used in these specifications:

   a. "Covered area" means the geographical area described in the solicitation from which this contract resulted;

   b. "Director" means Director, Office of Federal Contract Compliance Programs, United States Department of Labor, or any person to whom the Director delegates authority;

   c. "Employer identification number" means the Federal Social Security number used on the Employer's Quarterly Federal Tax Return, U.S. Treasury Department form 941;

   d. "Minority" includes:
      (i) Black (all persons having origins in any of the Black African racial groups not of Hispanic origin);

(ii) Hispanic (all persons of Mexican, Puerto Rican, Cuban, Central or South American or other Spanish Culture or origin, regardless of race);
(iii) Asian and Pacific Islander (all persons having origins in any of the original peoples of the Far East, Southeast Asia, the Indian Subcontinent, or the Pacific Islands); and
(iv) American Indian or Alaskan Native (all persons having origins in any of the original peoples of the North America and maintaining identifiable tribal affiliations through membership and participation or community identification).

2. Whenever the Contractor, or any subcontractor at any tier, subcontracts a portion of the work involving any construction trade, it shall physically include in each subcontract in excess of $10,000 the provisions of these specifications and the Notice which contains the applicable goals for minority and female participation and which is set forth in the solicitations from which this contract resulted.

3. If the contractor, is participating (pursuant to 41 CFR 60-4.5) in a Hometown Plan approved by the U.S. Department of Labor in the covered area either individually or through an association, its affirmative action obligations on all work in the Plan area (including goals and timetables) shall be in accordance with that Plan for those trades which have unions participating in the Plan. Contractors must be able to demonstrate their participation in and compliance with the provisions of any such Hometown Plan. Each Contractor or Subcontractor participating in an approved Plan is individually required to comply with its obligations under the EEO clause, and to make a good faith effort to achieve each goal under the Plan in each trade in which it has employees. The overall good faith performance by other Contractors for Subcontractors toward a goal in an approved Plan does not excuse any covered Contractor's or Subcontractor's failure to take good faith efforts to achieve the Plan goals and timetables.

4. The Contractor shall implement the specific affirmative action standards provided in paragraphs 7 a. through p. of these specifications. The goals set forth in the solicitation from which this contract resulted are expressed as percentages of the total hours of employment and training of minority and female utilization the Contractor should reasonably be able to achieve in each construction trade in which it has employees in contractors performing construction work in geographical areas where they do not have a Federal or federally assisted construction contract shall apply the minority and female goals established for the geographical areas where the work is being performed. Goals are published periodically in the Federal Register in notice form and such notices may be obtained from any Office of Federal Contract Compliance Programs office or from Federal procurement contracting officers. The Contractor is expected to make substantially uniform progress in meeting its goals in each craft during the period specific.

5. Neither the provisions of any collective bargaining agreement, nor the failure by a union with whom the Contractor has a collective bargaining agreement, to refer either minorities or women shall excuse the Contractor's obligations under these specifications, Executive Order 11246, or the regulations promulgated pursuant, thereto.

6. In order for the non working training hours of apprentices and trainees to be counted in meeting the goals, such apprentices and trainees must be employed by the Contractor during the training period, and the Contractor must have made a commitment to employ the

apprentices and trainees at the completion of their training, subject to the availability of employment opportunities. Trainees must be trained pursuant to training programs approved by the U.S. Department of Labor.

7. The Contractor shall take specific affirmative actions to ensure equal employment opportunity. The evaluation of the Contractor's compliance with these specifications shall be based upon its effort to achieve maximum results from its actions. The Contractor shall document these efforts fully, and shall implement affirmative action steps at least as expensive as the following:

   a. Ensure and maintain a working environment free of harassment, intimidation, coercion at all sites, and in all facilities at which the Contractor's employees are assigned to work. The Contractor, when possible, will assign two or more women to each construction project. The Contractor shall specifically ensure that all foremen, superintendents, and other on-site supervisory personnel are aware of and carry out the Contractor's obligation to maintain such a working environment, with specific attention to minority or female individuals working at such sites or in such facilities.

   b. Establish and maintain a current list of minority and female recruitment sources provide written notification to minority and female recruitment sources and to community organizations when the Contractor or its unions have employment opportunities available, and maintain a record of the organization's responses.

   c. Maintain a current file of the names, addresses and telephone numbers of each minority and female off-the-street applicant and minority or female referral from a union, a recruitment sources or community organization and of what action was taken with respect to each such individual. If such individual was sent to the union hiring hall for referral and was not referred back to the Contractor by the union or, if referred, not employed by the Contractor, this shall be documented in the file with the reason therefore, along with whatever additional actions the Contractor may have taken.

   d. Provide immediate written notification to the Director when the union or unions with which the Contractor has a collective bargaining agreement has not referred to the Contractor a minority person or woman sent by the Contractor, or when the Contractor has other information that the union referral process has impeded the Contractor's efforts to meet its obligations.

   e. Develop on-the-job training opportunities and/or participate in training programs for the area which expressly include minorities and women, including upgrading programs and apprenticeship and trainee programs relevant to the Contractor's employment needs, especially those programs funded or approved by the Department of Labor. The Contractor shall provide notice of these programs to the sources complied under 7b above.

   f. Disseminate the Contractor's EEO policy by providing notice of the policy to unions and training programs and requesting their cooperation in assisting the Contractor in meeting its EEO obligations; by including in any policy manual and collective bargaining agreement; by publicizing it in the company newspaper, annual report, etc.; by specific

review of the policy with all management personnel and with all minority and female employees at least once a year; and by posting the company EEO policy on bulletin boards accessible to all employees at each location where construction work is performed.

g. Review, at least annually, the company's EEO policy and affirmative action obligations under these specifications with all employees having any responsibility for hiring, assignment, layoff, termination or other employment decisions including specific review of these items with on-site supervisory personnel such as Superintendents, General Foremen, etc., prior to the initiation of construction work at any job site. A written record shall be made and maintained identifying the time and place of these meetings, persons attending, subject matter discussed, and disposition of the subject matter.

h. Disseminate the Contractor's EEO policy externally by including it in any advertising in the news media, specifically including minority and female news media, and providing written notification to and discussing the Contractor's EEO policy with other Contractors and Subcontractors with whom the Contractor does or anticipates doing business.

i. Direct its recruitment, efforts, both oral and written, to minority, female and community organizations, to schools with minority and female students and to minority and female recruitment and training organizations serving the Contractor's recruitment area and employment needs. Not later than one month other training by any recruitment source, the Contractor shall send written notification to organizations such as the above, describing prior to the date for the acceptance of applications for apprenticeship or the openings, screening procedures, and tests to be used in the selection process.

j. Encourage present minority and female employees to recruit other minority persons and women and, where reasonable, provide after school, summer and vacation employment to minority and female youth both on site and in other areas of a Contractor's work force.

k. Validate all tests and other selection requirements where there is an obligation to do so under 41 CFR Part 60-3.

l. Conduct, at least annually, an inventory and evaluation at least of all minority and female personnel for promotional opportunities and encourage these employees to seek or to prepare for, through appropriate training, etc., such opportunities.

m. Ensure that seniority practices, job classifications, work assignments and other personnel practices, do not have a discriminatory effect by continually monitoring all personnel and employment related activities to ensure that the EEO policy and the Contractor's obligations under these specifications are being carried out.

n. Ensure that all facilities and company activities are non segregated except that separate or single-user toilet and necessary changing facilities shall be provided to assure privacy between the sexes.

o. Document and maintain a record of all solicitations of offers for subcontracts from minority and female construction contractors and suppliers, including circulation of

solicitation to minority and female contractor associations and other business associations.

p. Conduct a review, at least annually, of all supervisor's adherence to and performance under the Contractor's EEO policies and affirmative action obligations.

8. Contractors are encouraged to participate in voluntary associations which assist in fulfilling one or more of their affirmative action obligations (7 a through p.). The efforts of a contractor association, joint contractor-union, contractor-community, or other similar group of which the contractor is a member and participant, may be asserted as fulfilling any one or more of its obligations under 7 a through p. of these specifications provided that the contractor actively participates in the group, makes every effort to assure that the group has a positive impact on the employment of minorities and women in the industry, ensures that the concrete benefits of the program and reflected in the Contractor's minority and female work force participation, makes a good faith effort to meet its individual goals and timetables, and can provide access to documentation which demonstrates the effectiveness of actions take on behalf of the Contractor. The obligation to comply, however, is the Contractor's and failure of such a group to fulfill an obligation shall not be a defense for the Contractor's noncompliance.

9. A single goal for minorities and a separate single goal for women have been established. The Contractor, however, is required to provide equal employment opportunity and to take affirmative action for all minority groups, both make and female, and all women, both minority and non-minority. Consequently, the Contractor may be in violation of the Executive Order if a particular group is employed in a substantially disparate manner (for example, specific minority group of women is underutilized.)

10. The Contractor shall not use the goals and timetables or affirmative action even through the Contractor has achieved its goals for women generally, the Contractor may be in violation of the Executive Order if standards to discriminate against any person because of race, color, religion, sex, or national origin.

11. The Contractor shall not enter into any Subcontract with any person or firm debarred from Government contracts pursuant to Executive Order 11246.

12. The Contractor shall carry out such sanctions and penalties for violation of these specifications and of the Equal Opportunity Clause, including suspension, termination and cancellation of existing subcontracts as may be imposed or ordered pursuant to Executive Order 11246, as amended, and its implementation regulations by the Office of Federal Contract Compliance Programs. Any Contractor who fails to carry out such sanctions and penalties shall be in violation of these specifications and Executive Order 11246, as amended.

13. The Contractor, in fulfilling its obligations under these specifications, shall implement specific affirmative action steps, at least as extensive as those standards prescribed in paragraph 7 of these specifications, so as to achieve maximum results from its efforts to ensure equal employment opportunity. If the Contractor fails to comply with the

requirements of the Executive Order, the implementing regulations, or these specifications, the Director shall proceed in accordance with 41 CFR 60-4.6.

14. The Contractor shall designate a responsible official to monitor all employment related activity to ensure that the company EEO policy is being carried out, to submit reports relating to the provisions hereof as may be required by the Government and to keep records. Records shall at least include for each employee the name, address, telephone numbers, construction trade, union affiliation if any, employee identification number when assigned, social security number, race, sex, status (e.g. mechanic, apprentice, trainee, helper, or laborer), dates of changes in status, hours worked per week in the indicated trade, rate of pay, and location sat which the work was performed. Records be maintained in an easily understandable and retrievable form; however, to the degree that existing records satisfy this requirement, contractors shall not be required to maintain separate records.

15. Nothing herein provided shall be construed as a limitation upon the application of other laws which establish different standards of compliance or upon the application of requirements for the hiring of local or other area residents (e.g., those under the Public Works Employment Act of 1977 and the Community Development Block Grant Program).

End of GOALS FOR EMPLOYMENT OF FEMALES AND MINORITIES
Federally Required Contract Document

****

D. Disadvantaged Business Enterprise (DBE) Requirements The Department has established an annual Disadvantaged Business Enterprise goal to be achieved through race neutral means. This goal will adjusted periodically and will be provided by Supplemental Provision. The Contractor shall comply with all provisions of this section regarding DBE participation and the Department's latest version of the Disadvantaged Business Enterprise Program Manual, said Manual being incorporated herein by reference. In the case of conflict between this Contract and said Manual, this Contract shall control. The Department reserves the right to adjust DBE goals on a project-by-project basis by addendum.

Policy. It is the Department's policy that DBEs as defined in 23 CFR Part 26 and referenced in the Transportation Equity Act for 21st Century of 1998, as amended from the Surface Transportation Uniform Relocation Assistance Act of 1987, and the Intermeddle Surface Transportation Efficiency Act of 1991. The intent hereto remains to provide the maximum opportunity for DBEs to participate in the performance of contracts financed in whole or in part with federal funds.

The Department and its Contractors shall not discriminate on the basis of race, color, national origin, ancestry, sex, age, or disability in the award and performance of DOT assisted contracts.

Disadvantaged Business Enterprises are those so certified by the Maine Department of Transportation Civil Rights Office prior to bid opening date.

The Department has determined that elements of a good faith effort to meet the contract goal include but are not limited to the following:

1. Whether the Contractor advertised in general circulation, trade association, and minority/women's-focus media concerning the subcontracting opportunities;

2. Whether the Contractor provided written notice to a reasonable number of specific DBEs that their interest in the contract is being solicited;

3. Whether the Contractor followed up on initial solicitations of interest by contacting DBEs to determine with certainty whether the DBEs were interested;

4. Whether the Contractor selected portions of the work to be performed by DBEs in order to increase the likelihood of meeting the DBE goals;

5. Whether the Contractor provided interested DBEs with adequate information about the plans, specification and requirements of the contract;

6. Whether the Contractor negotiated in good faith with interested DBEs, not rejecting the DBE as unqualified without sound reasons based on a thorough investigation of their capabilities;

7. Whether the Contractor made efforts to assist interested DBEs with other appropriate technical/financial assistance required by the Department or Contractor;

8. Whether the Contractor effectively used the services of available minority/women's community organizations, minority/women's business assistance offices; and other organizations that provide assistance in the recruitment and placement of DBEs.

Substitutions of DBEs. The following may be acceptable reasons for Civil Rights Office approval of such a change order:

- The DBE defaults, voluntarily removes itself or is over-extended;
- The Department deletes portions of the work to by performed by the DBE.

It is not intended that the ability to negotiate a more advantageous contract with another certified DBE be considered a valid basis for such a change in DBE utilization once the DBE Bid Submission review has been passed. Any requests to alter the DBE commitment must be in writing and included with the change order.

Failure to carry out terms of this Standard Specification shall be treated as a violation of this contract and will result in contract sanctions which may include withholding of partial payments totaling the creditable dollars amount which would have been paid for said DBE participation, termination of this contract or other measures which may affect the ability of the Contractor to obtain Department contracts.

Copies of the Maine Department of Transportation's DBE Program may be obtained from:

Maine Department of Transportation
Civil Rights Office
#16 State House Station
Augusta, Maine 04333-0016
tel. (207) 624-3519

Quarterly Reporting Requirement. The Contractor must submit Semi-annual reports of actual dollars paid to Disadvantaged Business Enterprises (DBE's) on this Project to the MDOT Civil Rights Office by the end of the third week of April and October for the period covering the preceding six months considered Federal Fiscal Year periods. The reports will be submitted directly to the Civil Rights Office on the form provided in the latest version of the DBE Program Manual. Failure to submit the report by the deadline may result in a withholding of approval of partial payment estimates by the Department.

SECTION 3 - OTHER FEDERAL REQUIREMENTS

Unless expressly otherwise provided in the Bid Documents, the provisions contained in this Section 3 of this "Federal Contract Provisions Supplement" are hereby incorporated into the Bid Documents and Contract.

A. Buy America

If the cost of products purchased for permanent use in this project which are manufactured of steel, iron or the application of any coating to products of these materials exceeds 0.1 percent of the contract amount, or $2,500.00, whichever is greater, the products shall have been manufactured and the coating applied in the United States. The coating materials are not subject to this clause, only the application of the coating. In computing that amount, only the cost of the product and coating application cost will be included.

Ore, for the manufacture of steel or iron, may be from outside the United States; however, all other manufacturing processes of steel or iron must be in the United States to qualify as having been manufactured in the United States.

United States includes the 50 United States and any place subject to the jurisdiction thereof.

Products of steel include, but are not limited to, such products as structural steel, piles, guardrail, steel culverts, reinforcing steel, structural plate and steel supports for signs, luminaries and signals.

Products of iron include, but are not limited to, such products as cast iron grates.

Application of coatings include, but are not limited to, such applications as epoxy, galvanized and paint.

To assure compliance with this section, the Contractor shall submit a certification letter on its letterhead to the Department stating the following:

> “This is to certify that products made of steel, iron or the application of any coating to products of these materials whose costs are in excess of $2,500.00 or 0.1 percent of the original contract amount, whichever is greater, were manufactured and the coating, if one was required, was applied in the United States.”

B. Materials

a. Convict Produced Materials References: 23 U.S.C. 114(b)(2), 23 CFR 635.417

Applicability: FHWA's prohibition against the use of convict material only applies to Federal-aid highways. Materials produced after July 1, 1991, by convict labor may only be incorporated in a Federal-aid highway construction project if: 1) such materials have been produced by convicts who are on parole, supervised release, or probation from a prison; or 2) such material has been produced in a qualified prison facility, e.g., prison industry, with the amount produced during any 12-month period, for use in Federal-aid projects, not exceeding the amount produced, for such use, during the 12-month period ending July 1, 1987.

Materials obtained from prison facilities (e.g., prison industries) are subject to the same requirements for Federal-aid participation that are imposed upon materials acquired from other sources. Materials manufactured or produced by convict labor will be given no preferential treatment.

The preferred method of obtaining materials for a project is through normal contracting procedures which require the contractor to furnish all materials to be incorporated in the work. The contractor selects the source, public or private, from which the materials are to be obtained (23 CFR 635.407). Prison industries are prohibited from bidding on projects directly (23 CFR 635.112e), but may act as material supplier to construction contractors.

Prison materials may also be approved as State-furnished material. However, since public agencies may not bid in competition with private firms, direct acquisition of materials from a prison industry for use as State-furnished material is subject to a public interest finding with the Division Administrator's concurrence (23 CFR 635.407d). Selection of materials produced by convict labor as State-furnished materials for mandatory use should be cleared prior to the submittal of the Plans Specifications & Estimates (PS&E).

b. Patented/Proprietary Products References: 23 U.S.C. 112, 23 CFR 635.411

FHWA will not participate, directly or indirectly, in payment for any premium or royalty on any patented or proprietary material, specification, or process specifically set forth in the plans and specifications for a project, unless:

- the item is purchased or obtained through competitive bidding with equally suitable unpatented items,
- the STA certifies either that the proprietary or patented item is essential for synchronization with the existing highway facilities or that no equally suitable alternative exists, or
- the item is used for research or for a special type of construction on relatively short sections of road for experimental purposes. States should follow FHWA's procedures for "Construction Projects Incorporating Experimental Features" (expermnt.htm) for the submittal of work plans and evaluations.

The primary purpose of the policy is to have competition in selection of materials and allow for development of new materials and products. The policy further permits materials and products that are judged equal may be bid under generic specifications. If only patented or proprietary products are acceptable, they shall be bid as alternatives with all, or at least a

reasonable number of, acceptable materials or products listed; and the Division Administrator may approve a single source if it can be found that its utilization is in the public interest.

Trade names are generally the key to identifying patented or proprietary materials. Trade name examples include 3M, Corten, etc. Generally, products identified by their brand or trade name are not to be specified without an "or equal" phrase, and, if trade names are used, all, or at least a reasonable number of acceptable "equal" materials or products should be listed. The licensing of several suppliers to produce a product does not change the fact that it is a single product and should not be specified to the exclusion of other equally suitable products.

c. State Preference References: 23 U.S.C. 112, 23 CFR 635.409

Materials produced within Maine shall not be favored to the exclusion of comparable materials produced outside of Maine. State preference clauses give particular advantage to the designated source and thus restrict competition. Therefore, State preference provisions shall not be used on any Federal-aid construction projects.

This policy also applies to State preference actions against materials of foreign origin, except as otherwise permitted by Federal law. Thus, States cannot give preference to in-State material sources over foreign material sources. Under the Buy America provisions, the States are permitted to expand the Buy America restrictions provided that the STA is legally authorized under State law to impose more stringent requirements.

d. State Owned/Furnished/Designated Materials References: 23 U.S.C. 112, 23 CFR 635.407

Current FHWA policy requires that the contractor must furnish all materials to be incorporated in the work, and the contractor shall be permitted to select the sources from which the materials are to be obtained. Exceptions to this requirement may be made when there is a definite finding, by MDOT and concurred in by Federal Highway Administration's (FHWA) Division Administrator, that it is in the public interest to require the contractor to use materials furnished by the MDOT or from sources designated by MDOT. The exception policy can best be understood by separating State-furnished materials into the categories of manufactured materials and local natural materials.

Manufactured Materials When the use of State-furnished manufactured materials is approved based on a public interest finding, such use must be made mandatory. The optional use of State-furnished manufactured materials is in violation of our policy prohibiting public agencies from competing with private firms. Manufactured materials to be furnished by MDOT must be acquired through competitive bidding, unless there is a public interest finding for another method, and concurred in by FHWA's Division Administrator.

Local Natural Materials When MDOT owns or controls a local natural materials source such as a borrow pit or a stockpile of salvaged pavement material, etc., the materials may be designated for either optional or mandatory use; however, mandatory use will require a public interest finding (PIF) and FHWA's Division Administrator's concurrence.

In order to permit prospective bidders to properly prepare their bids, the location, cost, and any conditions to be met for obtaining materials that are made available to the contractor shall be stated in the bidding documents.

Mandatory Disposal Sites Normally, the disposal site for surplus excavated materials is to be of the contractor's choosing; although, an optional site(s) may be shown in the contract provisions. A mandatory site shall be specified when there is a finding by MDOT, with the concurrence of the Division Administrator, that such placement is the most economical or that the environment would be substantially enhanced without excessive cost. Discussion of the mandatory use of a disposal site in the environmental document may serve as the basis for the public interest finding.

Summarizing FHWA policy for the mandatory use of borrow or disposal sites:

- mandatory use of either requires a public interest finding and FHWA's Division Administrator's concurrence,
- mandatory use of either may be based on environmental consideration where the environment will be substantially enhanced without excessive additional cost, and
- where the use is based on environmental considerations, the discussion in the environmental document may be used as the basis for the public interest finding.

Factors to justify a public interest finding should include such items as cost effectiveness, system integrity, and local shortages of material.

C. Standard FHWA Contract Provisions - FHWA 1273

Unless expressly otherwise provided in the Bid Documents, the following "Required Contract Provisions, Federal Aid Construction Contracts", FHWA-1273, are hereby incorporated into the Bid Documents and Contract.

****

Start of FHWA 1273 REQUIRED CONTRACT PROVISIONS
FEDERAL-AID CONSTRUCTION CONTRACTS(As revised through March 10, 1994)

I. GENERAL

1. These contract provisions shall apply to all work performed on the contract by the contractor's own organization and with the assistance of workers under the contractor's immediate superintendence and to all work performed on the contract by piecework, station work, or by subcontract.

2. Except as otherwise provided for in each section, the contractor shall insert in each subcontract all of the stipulations contained in these Required Contract Provisions, and further require their inclusion in any lower tier subcontract or purchase order that may in turn be made. The Required Contract Provisions shall not be incorporated by reference in any case. The prime contractor shall be responsible for compliance by any subcontractor or lower tier subcontractor with these Required Contract Provisions.

3. A breach of any of the stipulations contained in these Required Contract Provisions shall be sufficient grounds for termination of the contract.

4. A breach of the following clauses of the Required Contract Provisions may also be grounds for debarment as provided in 29 CFR 5.12:

   Section I, paragraph 2;
   Section IV, paragraphs 1, 2, 3, 4, and 7;
   Section V, paragraphs 1 and 2a through 2g.

5. Disputes arising out of the labor standards provisions of Section IV (except paragraph 5) and Section V of these Required Contract Provisions shall not be subject to the general disputes clause of this contract. Such disputes shall be resolved in accordance with the procedures of the U.S. Department of Labor (DOL) as set forth in 29 CFR 5, 6, and 7. Disputes within the meaning of this clause include disputes between the contractor (or any of its subcontractors) and the contracting agency, the DOL, or the contractor's employees or their representatives.

6. Selection of Labor: During the performance of this contract, the contractor shall not:

   a. discriminate against labor from any other State, possession, or territory of the United States (except for employment preference for Appalachian contracts, when applicable, as specified in Attachment A), or

   b. employ convict labor for any purpose within the limits of the project unless it is labor performed by convicts who are on parole, supervised release, or probation.

II. NONDISCRIMINATION (Applicable to all Federal-aid construction contracts and to all related subcontracts of $10,000 or more.)

1. Equal Employment Opportunity: Equal employment opportunity (EEO) requirements not to discriminate and to take affirmative action to assure equal opportunity as set forth under laws, executive orders, rules, regulations (28 CFR 35, 29 CFR 1630 and 41 CFR 60) and orders of the Secretary of Labor as modified by the provisions prescribed herein, and imposed pursuant to 23 U.S.C. 140 shall constitute the EEO and specific affirmative action standards for the contractor's project activities under this contract. The Equal Opportunity Construction Contract Specifications set forth under 41 CFR 60-4.3 and the provisions of the American Disabilities Act of 1990 (42 U.S.C. 12101 et seq.) set forth under 28 CFR 35 and 29 CFR 1630 are incorporated by reference in this contract. In the execution of this contract, the contractor agrees to comply with the following minimum specific requirement activities of EEO:
   a. The contractor will work with the State highway agency (SHA) and the Federal Government in carrying out EEO obligations and in their review of his/her activities under the contract.

   b. The contractor will accept as his operating policy the following statement:
   "It is the policy of this Company to assure that applicants are employed, and that employees are treated during employment, without regard to their race, religion, sex, color, national origin, age or disability. Such action shall include: employment,

upgrading, demotion, or transfer; recruitment or recruitment advertising; layoff or termination; rates of pay or other forms of compensation; and selection for training, including apprenticeship, preapprenticeship, and/or on-the-job training."

2. EEO Officer. The contractor will designate and make known to the SHA contracting officers an EEO Officer who will have the responsibility for and must be capable of effectively administering and promoting an active contractor program of EEO and who must be assigned adequate authority and responsibility to do so.

3. Dissemination of Policy. All members of the contractor's staff who are authorized to hire, supervise, promote, and discharge employees, or who recommend such action, or who are substantially involved in such action, will be made fully cognizant of, and will implement, the contractor's EEO policy and contractual responsibilities to provide EEO in each grade and classification of employment. To ensure that the above agreement will be met, the following actions will be taken as a minimum:

   a. Periodic meetings of supervisory and personnel office employees will be conducted before the start of work and then not less often than once every six months, at which time the contractor's EEO policy and its implementation will be reviewed and explained. The meetings will be conducted by the EEO Officer.

   b. All new supervisory or personnel office employees will be given a thorough indoctrination by the EEO Officer, covering all major aspects of the contractor's EEO obligations within thirty days following their reporting for duty with the contractor.

   c. All personnel who are engaged in direct recruitment for the project will be instructed by the EEO Officer in the contractor's procedures for locating and hiring minority group employees.

   d. Notices and posters setting forth the contractor's EEO policy will be placed in areas readily accessible to employees, applicants for employment and potential employees.

   e. The contractor's EEO policy and the procedures to implement such policy will be brought to the attention of employees by means of meetings, employee handbooks, or other appropriate means.

4. Recruitment. When advertising for employees, the contractor will include in all advertisements for employees the notation: "An Equal Opportunity Employer." All such advertisements will be placed in publications having a large circulation among minority groups in the area from which the project work force would normally be derived.

   a. The contractor will, unless precluded by a valid bargaining agreement, conduct systematic and direct recruitment through public and private employee referral sources likely to yield qualified minority group applicants. To meet this requirement, the contractor will identify sources of potential minority group employees, and establish with such identified sources procedures whereby minority group applicants may be referred to the contractor for employment consideration.

b. In the event the contractor has a valid bargaining agreement providing for exclusive hiring hall referrals, he is expected to observe the provisions of that agreement to the extent that the system permits the contractor's compliance with EEO contract provisions. (The DOL has held that where implementation of such agreements have the effect of discriminating against minorities or women, or obligates the contractor to do the same, such implementation violates Executive Order 11246, as amended.)

c. The contractor will encourage his present employees to refer minority group applicants for employment. Information and procedures with regard to referring minority group applicants will be discussed with employees.

5. Personnel Actions. Wages, working conditions, and employee benefits shall be established and administered, and personnel actions of every type, including hiring, upgrading, promotion, transfer, demotion, layoff, and termination, shall be taken without regard to race, color, religion, sex, national origin, age or disability. The following procedures shall be followed:

a. The contractor will conduct periodic inspections of project sites to insure that working conditions and employee facilities do not indicate discriminatory treatment of project site personnel.

b. The contractor will periodically evaluate the spread of wages paid within each classification to determine any evidence of discriminatory wage practices.

c. The contractor will periodically review selected personnel actions in depth to determine whether there is evidence of discrimination. Where evidence is found, the contractor will promptly take corrective action. If the review indicates that the discrimination may extend beyond the actions reviewed, such corrective action shall include all affected persons.

d. The contractor will promptly investigate all complaints of alleged discrimination made to the contractor in connection with his obligations under this contract, will attempt to resolve such complaints, and will take appropriate corrective action within a reasonable time. If the investigation indicates that the discrimination may affect persons other than the complainant, such corrective action shall include such other persons. Upon completion of each investigation, the contractor will inform every complainant of all of his avenues of appeal.

6. Training and Promotion.

a. The contractor will assist in locating, qualifying, and increasing the skills of minority group and women employees, and applicants for employment.

b. Consistent with the contractor's work force requirements and as permissible under Federal and State regulations, the contractor shall make full use of training programs, i.e., apprenticeship, and on-the-job training programs for the geographical area of contract performance. Where feasible, 25 percent of apprentices or trainees in each occupation shall be in their first year of apprenticeship or training. In the event a special provision

for training is provided under this contract, this subparagraph will be superseded as indicated in the special provision.

c. The contractor will advise employees and applicants for employment of available training programs and entrance requirements for each.

d. The contractor will periodically review the training and promotion potential of minority group and women employees and will encourage eligible employees to apply for such training and promotion.

7. Unions. If the contractor relies in whole or in part upon unions as a source of employees, the contractor will use his/her best efforts to obtain the cooperation of such unions to increase opportunities for minority groups and women within the unions, and to effect referrals by such unions of minority and female employees. Actions by the contractor either directly or through a contractor's association acting as agent will include the procedures set forth below:

   a. The contractor will use best efforts to develop, in cooperation with the unions, joint training programs aimed toward qualifying more minority group members and women for membership in the unions and increasing the skills of minority group employees and women so that they may qualify for higher paying employment.

   b. The contractor will use best efforts to incorporate an EEO clause into each union agreement to the end that such union will be contractually bound to refer applicants without regard to their race, color, religion, sex, national origin, age or disability.

   c. The contractor is to obtain information as to the referral practices and policies of the labor union except that to the extent such information is within the exclusive possession of the labor union and such labor union refuses to furnish such information to the contractor, the contractor shall so certify to the SHA and shall set forth what efforts have been made to obtain such information.

   d. In the event the union is unable to provide the contractor with a reasonable flow of minority and women referrals within the time limit set forth in the collective bargaining agreement, the contractor will, through independent recruitment efforts, fill the employment vacancies without regard to race, color, religion, sex, national origin, age or disability; making full efforts to obtain qualified and/or qualifiable minority group persons and women. (The DOL has held that it shall be no excuse that the union with which the contractor has a collective bargaining agreement providing for exclusive referral failed to refer minority employees.) In the event the union referral practice prevents the contractor from meeting the obligations pursuant to Executive Order 11246, as amended, and these special provisions, such contractor shall immediately notify the SHA.

8. Selection of Subcontractors, Procurement of Materials and Leasing of Equipment. The contractor shall not discriminate on the grounds of race, color, religion, sex, national origin, age or disability in the selection and retention of subcontractors, including procurement of materials and leases of equipment.

a. The contractor shall notify all potential subcontractors and suppliers of his/her EEO obligations under this contract.

b. Disadvantaged business enterprises (DBE), as defined in 49 CFR 23, shall have equal opportunity to compete for and perform subcontracts which the contractor enters into pursuant to this contract. The contractor will use his best efforts to solicit bids from and to utilize DBE subcontractors or subcontractors with meaningful minority group and female representation among their employees. Contractors shall obtain lists of DBE construction firms from SHA personnel.

c. The contractor will use his best efforts to ensure subcontractor compliance with their EEO obligations.

9. Records and Reports. The contractor shall keep such records as necessary to document compliance with the EEO requirements. Such records shall be retained for a period of three years following completion of the contract work and shall be available at reasonable times and places for inspection by authorized representatives of the SHA and the FHWA.

a. The records kept by the contractor shall document the following:

(1) The number of minority and non-minority group members and women employed in each work classification on the project;

(2) The progress and efforts being made in cooperation with unions, when applicable, to increase employment opportunities for minorities and women;

(3) The progress and efforts being made in locating, hiring, training, qualifying, and upgrading minority and female employees; and

(4) The progress and efforts being made in securing the services of DBE subcontractors or subcontractors with meaningful minority and female representation among their employees.

b. All such records must be retained for a period of three years following completion of the contract work and shall be available at reasonable times and places for inspection by authorized representatives of the MDOT and the Federal Highway Administration.

The Contractor will submit to the MDOT a report for the month of July, indicating the total hours worked by minority, women and non-minority group employees currently engaged in each work classification required by the contract work. This information is to be reported on Form PR-1391. If on-the-job training is being required by "Training Special Provision," the Contractor will be required to furnish Form FHWA-1409. The report is required for week ending July 15 and can be obtained from MDOT, is due by week ending August 20th. This report is to be furnished directly to MDOT - Civil Rights Office.

III. <u>NONSEGREGATED FACILITIES</u> (Applicable to all Federal-aid construction contracts and to all related subcontracts of $10,000 or more.)

a. By submission of this bid, the execution of this contract or subcontract, or the consummation of this material supply agreement or purchase order, as appropriate, the bidder, Federal-aid construction contractor, subcontractor, material supplier, or vendor, as appropriate, certifies that the firm does not maintain or provide for its employees any segregated facilities at any of its establishments, and that the firm does not permit its employees to perform their services at any location, under its control, where segregated facilities are maintained. The firm agrees that a breach of this certification is a violation of the EEO provisions of this contract. The firm further certifies that no employee will be denied access to adequate facilities on the basis of sex or disability.

b. As used in this certification, the term "segregated facilities" means any waiting rooms, work areas, restrooms and washrooms, restaurants and other eating areas, time clocks, locker rooms, and other storage or dressing areas, parking lots, drinking fountains, recreation or entertainment areas, transportation, and housing facilities provided for employees which are segregated by explicit directive, or are, in fact, segregated on the basis of race, color, religion, national origin, age or disability, because of habit, local custom, or otherwise. The only exception will be for the disabled when the demands for accessibility override (e.g. disabled parking).

c. The contractor agrees that it has obtained or will obtain identical certification from proposed subcontractors or material suppliers prior to award of subcontracts or consummation of material supply agreements of $10,000 or more and that it will retain such certifications in its files.

IV. <u>PAYMENT OF PREDETERMINED MINIMUM WAGE</u> (Applicable to all Federal-aid construction contracts exceeding $2,000 and to all related subcontracts, except for projects located on roadways classified as local roads or rural minor collectors, which are exempt.)

1. General:

   a. All mechanics and laborers employed or working upon the site of the work will be paid unconditionally and not less often than once a week and without subsequent deduction or rebate on any account [except such payroll deductions as are permitted by regulations (29 CFR 3) issued by the Secretary of Labor under the Copeland Act (40 U.S.C. 276c)] the full amounts of wages and bona fide fringe benefits (or cash equivalents thereof) due at time of payment. The payment shall be computed at wage rates not less than those contained in the wage determination of the Secretary of Labor (hereinafter "the wage determination") which is attached hereto and made a part hereof, regardless of any contractual relationship which may be alleged to exist between the contractor or its subcontractors and such laborers and mechanics. The wage determination (including any additional classifications and wage rates conformed under paragraph 2 of this Section IV and the DOL poster (WH-1321) or Form FHWA-1495) shall be posted at all times by the contractor and its subcontractors at the site of the work in a prominent and accessible place where it can be easily seen by the workers. For the purpose of this Section, contributions made or costs reasonably anticipated for bona fide fringe benefits under Section 1(b)(2) of the Davis-Bacon Act (40 U.S.C. 276a) on behalf of laborers or mechanics are considered wages paid to such laborers or mechanics, subject to the

provisions of Section IV, paragraph 3b, hereof. Also, for the purpose of this Section, regular contributions made or costs incurred for more than a weekly period (but not less often than quarterly) under plans, funds, or programs, which cover the particular weekly period, are deemed to be constructively made or incurred during such weekly period. Such laborers and mechanics shall be paid the appropriate wage rate and fringe benefits on the wage determination for the classification of work actually performed, without regard to skill, except as provided in paragraphs 4 and 5 of this Section IV.

b. Laborers or mechanics performing work in more than one classification may be compensated at the rate specified for each classification for the time actually worked therein, provided, that the employer's payroll records accurately set forth the time spent in each classification in which work is performed.

c. All rulings and interpretations of the Davis-Bacon Act and related acts contained in 29 CFR 1, 3, and 5 are herein incorporated by reference in this contract.

2. Classification:

a. The SHA contracting officer shall require that any class of laborers or mechanics employed under the contract, which is not listed in the wage determination, shall be classified in conformance with the wage determination.

b. The contracting officer shall approve an additional classification, wage rate and fringe benefits only when the following criteria have been met:

(1) the work to be performed by the additional classification requested is not performed by a classification in the wage determination;

(2) the additional classification is utilized in the area by the construction industry;

(3) the proposed wage rate, including any bona fide fringe benefits, bears a reasonable relationship to the wage rates contained in the wage determination; and

(4) with respect to helpers, when such a classification prevails in the area in which the work is performed.

c. If the contractor or subcontractors, as appropriate, the laborers and mechanics (if known) to be employed in the additional classification or their representatives, and the contracting officer agree on the classification and wage rate (including the amount designated for fringe benefits where appropriate), a report of the action taken shall be sent by the contracting officer to the DOL, Administrator of the Wage and Hour Division, Employment Standards Administration, Washington, D.C. 20210. The Wage and Hour Administrator, or an authorized representative, will approve, modify, or disapprove every additional classification action within 30 days of receipt and so advise the contracting officer or will notify the contracting officer within the 30-day period that additional time is necessary.

d. In the event the contractor or subcontractors, as appropriate, the laborers or mechanics to be employed in the additional classification or their representatives, and the contracting officer do not agree on the proposed classification and wage rate (including the amount designated for fringe benefits, where appropriate), the contracting officer shall refer the questions, including the views of all interested parties and the recommendation of the contracting officer, to the Wage and Hour Administrator for determination. Said Administrator, or an authorized representative, will issue a determination within 30 days of receipt and so advise the contracting officer or will notify the contracting officer within the 30-day period that additional time is necessary

e. The wage rate (including fringe benefits where appropriate) determined pursuant to paragraph 2c or 2d of this Section IV shall be paid to all workers performing work in the additional classification from the first day on which work is performed in the classification.

3. Payment of Fringe Benefits:

a. Whenever the minimum wage rate prescribed in the contract for a class of laborers or mechanics includes a fringe benefit which is not expressed as an hourly rate, the contractor or subcontractors, as appropriate, shall either pay the benefit as stated in the wage determination or shall pay another bona fide fringe benefit or an hourly case equivalent thereof.

b. If the contractor or subcontractor, as appropriate, does not make payments to a trustee or other third person, he/she may consider as a part of the wages of any laborer or mechanic the amount of any costs reasonably anticipated in providing bona fide fringe benefits under a plan or program, provided, that the Secretary of Labor has found, upon the written request of the contractor, that the applicable standards of the Davis-Bacon Act have been met. The Secretary of Labor may require the contractor to set aside in a separate account assets for the meeting of obligations under the plan or program.

4. Apprentices and Trainees (Programs of the U.S. DOL) and Helpers:

a. Apprentices:

(1) Apprentices will be permitted to work at less than the predetermined rate for the work they performed when they are employed pursuant to and individually registered in a bona fide apprenticeship program registered with the DOL, Employment and Training Administration, Bureau of Apprenticeship and Training, or with a State apprenticeship agency recognized by the Bureau, or if a person is employed in his/her first 90 days of probationary employment as an apprentice in such an apprenticeship program, who is not individually registered in the program, but who has been certified by the Bureau of Apprenticeship and Training or a State apprenticeship agency (where appropriate) to be eligible for probationary employment as an apprentice.

(2) The allowable ratio of apprentices to journeyman-level employees on the job site in any craft classification shall not be greater than the ratio permitted to the contractor

as to the entire work force under the registered program. Any employee listed on a payroll at an apprentice wage rate, who is not registered or otherwise employed as stated above, shall be paid not less than the applicable wage rate listed in the wage determination for the classification of work actually performed. In addition, any apprentice performing work on the job site in excess of the ratio permitted under the registered program shall be paid not less than the applicable wage rate on the wage determination for the work actually performed. Where a contractor or subcontractor is performing construction on a project in a locality other than that in which its program is registered, the ratios and wage rates (expressed in percentages of the journeyman-level hourly rate) specified in the contractor's or subcontractor's registered program shall be observed.

(3) Every apprentice must be paid at not less than the rate specified in the registered program for the apprentice's level of progress, expressed as a percentage of the journeyman-level hourly rate specified in the applicable wage determination. Apprentices shall be paid fringe benefits in accordance with the provisions of the apprenticeship program. If the apprenticeship program does not specify fringe benefits, apprentices must be paid the full amount of fringe benefits listed on the wage determination for the applicable classification. If the Administrator for the Wage and Hour Division determines that a different practice prevails for the applicable apprentice classification, fringes shall be paid in accordance with that determination.

(4) In the event the Bureau of Apprenticeship and Training, or a State apprenticeship agency recognized by the Bureau, withdraws approval of an apprenticeship program, the contractor or subcontractor will no longer be permitted to utilize apprentices at less than the applicable predetermined rate for the comparable work performed by regular employees until an acceptable program is approved.

b. Trainees:

(1) Except as provided in 29 CFR 5.16, trainees will not be permitted to work at less than the predetermined rate for the work performed unless they are employed pursuant to and individually registered in a program which has received prior approval, evidenced by formal certification by the DOL, Employment and Training Administration.

(2) The ratio of trainees to journeyman-level employees on the job site shall not be greater than permitted under the plan approved by the Employment and Training Administration. Any employee listed on the payroll at a trainee rate who is not registered and participating in a training plan approved by the Employment and Training Administration shall be paid not less than the applicable wage rate on the wage determination for the classification of work actually performed. In addition, any trainee performing work on the job site in excess of the ratio permitted under the registered program shall be paid not less than the applicable wage rate on the wage determination for the work actually performed.

(3) Every trainee must be paid at not less than the rate specified in the approved program for his/her level of progress, expressed as a percentage of the journeyman-level hourly rate specified in the applicable wage determination. Trainees shall be paid fringe benefits in accordance with the provisions of the trainee program. If the trainee program does not mention fringe benefits, trainees shall be paid the full amount of fringe benefits listed on the wage determination unless the Administrator of the Wage and Hour Division determines that there is an apprenticeship program associated with the corresponding journeyman-level wage rate on the wage determination which provides for less than full fringe benefits for apprentices, in which case such trainees shall receive the same fringe benefits as apprentices.

(4) In the event the Employment and Training Administration withdraws approval of a training program, the contractor or subcontractor will no longer be permitted to utilize trainees at less than the applicable predetermined rate for the work performed until an acceptable program is approved.

c. Helpers. Helpers will be permitted to work on a project if the helper classification is specified and defined on the applicable wage determination or is approved pursuant to the conformance procedure set forth in Section IV.2. Any worker listed on a payroll at a helper wage rate, who is not a helper under a approved definition, shall be paid not less than the applicable wage rate on the wage determination for the classification of work actually performed.

5. Apprentices and Trainees (Programs of the U.S. DOT). Apprentices and trainees working under apprenticeship and skill training programs which have been certified by the Secretary of Transportation as promoting EEO in connection with Federal-aid highway construction programs are not subject to the requirements of paragraph 4 of this Section IV. The straight time hourly wage rates for apprentices and trainees under such programs will be established by the particular programs. The ratio of apprentices and trainees to journeymen shall not be greater than permitted by the terms of the particular program.

6. Withholding. The SHA shall upon its own action or upon written request of an authorized representative of the DOL withhold, or cause to be withheld, from the contractor or subcontractor under this contract or any other Federal contract with the same prime contractor, or any other Federally-assisted contract subject to Davis-Bacon prevailing wage requirements which is held by the same prime contractor, as much of the accrued payments or advances as may be considered necessary to pay laborers and mechanics, including apprentices, trainees, and helpers, employed by the contractor or any subcontractor the full amount of wages required by the contract. In the event of failure to pay any laborer or mechanic, including any apprentice, trainee, or helper, employed or working on the site of the work, all or part of the wages required by the contract, the SHA contracting officer may, after written notice to the contractor, take such action as may be necessary to cause the suspension of any further payment, advance, or guarantee of funds until such violations have ceased.

7. Overtime Requirements. No contractor or subcontractor contracting for any part of the contract work which may require or involve the employment of laborers, mechanics, watchmen, or guards (including apprentices, trainees, and helpers described in paragraphs 4

and 5 above) shall require or permit any laborer, mechanic, watchman, or guard in any workweek in which he/she is employed on such work, to work in excess of 40 hours in such workweek unless such laborer, mechanic, watchman, or guard receives compensation at a rate not less than one-and-one-half times his/her basic rate of pay for all hours worked in excess of 40 hours in such workweek.

8. Violation. Liability for Unpaid Wages; Liquidated Damages: In the event of any violation of the clause set forth in paragraph 7 above, the contractor and any subcontractor responsible thereof shall be liable to the affected employee for his/her unpaid wages. In addition, such contractor and subcontractor shall be liable to the United States (in the case of work done under contract for the District of Columbia or a territory, to such District or to such territory) for liquidated damages. Such liquidated damages shall be computed with respect to each individual laborer, mechanic, watchman, or guard employed in violation of the clause set forth in paragraph 7, in the sum of $10 for each calendar day on which such employee was required or permitted to work in excess of the standard work week of 40 hours without payment of the overtime wages required by the clause set forth in paragraph 7.

9. Withholding for Unpaid Wages and Liquidated Damages. The SHA shall upon its own action or upon written request of any authorized representative of the DOL withhold, or cause to be withheld, from any monies payable on account of work performed by the contractor or subcontractor under any such contract or any other Federal contract with the same prime contractor, or any other Federally-assisted contract subject to the Contract Work Hours and Safety Standards Act, which is held by the same prime contractor, such sums as may be determined to be necessary to satisfy any liabilities of such contractor or subcontractor for unpaid wages and liquidated damages as provided in the clause set forth in paragraph 8 above.

V. STATEMENTS AND PAYROLLS (Applicable to all Federal-aid construction contracts exceeding $2,000 and to all related subcontracts, except for projects located on roadways classified as local roads or rural collectors, which are exempt.)

1. Compliance with Copeland Regulations (29 CFR 3). The contractor shall comply with the Copeland Regulations of the Secretary of Labor which are herein incorporated by reference.

2. Payrolls and Payroll Records:

   a. Payrolls and basic records relating thereto shall be maintained by the contractor and each subcontractor during the course of the work and preserved for a period of 3 years from the date of completion of the contract for all laborers, mechanics, apprentices, trainees, watchmen, helpers, and guards working at the site of the work.

   b. The payroll records shall contain the name, social security number, and address of each such employee; his or her correct classification; hourly rates of wages paid (including rates of contributions or costs anticipated for bona fide fringe benefits or cash equivalent thereof the types described in Section 1(b)(2)(B) of the Davis Bacon Act); daily and weekly number of hours worked; deductions made; and actual wages paid. In addition, for Appalachian contracts, the payroll records shall contain a notation indicating whether the employee does, or does not, normally reside in the labor area as defined in

Attachment A, paragraph 1. Whenever the Secretary of Labor, pursuant to Section IV, paragraph 3b, has found that the wages of any laborer or mechanic include the amount of any costs reasonably anticipated in providing benefits under a plan or program described in Section 1(b)(2)(B) of the Davis Bacon Act, the contractor and each subcontractor shall maintain records which show that the commitment to provide such benefits is enforceable, that the plan or program is financially responsible, that the plan or program has been communicated in writing to the laborers or mechanics affected, and show the cost anticipated or the actual cost incurred in providing benefits. Contractors or subcontractors employing apprentices or trainees under approved programs shall maintain written evidence of the registration of apprentices and trainees, and ratios and wage rates prescribed in the applicable programs.

c. Each contractor and subcontractor shall furnish, each week in which any contract work is performed, to the SHA resident engineer a payroll of wages paid each of its employees (including apprentices, trainees, and helpers, described in Section IV, paragraphs 4 and 5, and watchmen and guards engaged on work during the preceding weekly payroll period). The payroll submitted shall set out accurately and completely all of the information required to be maintained under paragraph 2b of this Section V. This information may be submitted in any form desired. Optional Form WH-347 is available for this purpose and may be purchased from the Superintendent of Documents (Federal stock number 029-005-0014-1), U.S. Government Printing Office, Washington, D.C. 20402. The prime contractor is responsible for the submission of copies of payrolls by all subcontractors.

d. Each payroll submitted shall be accompanied by a "Statement of Compliance," signed by the contractor or subcontractor or his/her agent who pays or supervises the payment of the persons employed under the contract and shall certify the following:

   (1) that the payroll for the payroll period contains the information required to be maintained under paragraph 2b of this Section V and that such information is correct and complete;

   (2) that such laborer or mechanic (including each helper, apprentice, and trainee) employed on the contract during the payroll period has been paid the full weekly wages earned, without rebate, either directly or indirectly, and that no deductions have been made either directly or indirectly from the full wages earned, other than permissible deductions as set forth in the Regulations, 29 CFR 3;

   (3) that each laborer or mechanic has been paid not less that the applicable wage rate and fringe benefits or cash equivalent for the classification of worked performed, as specified in the applicable wage determination incorporated into the contract.

e. The weekly submission of a properly executed certification set forth on the reverse side of Optional Form WH-347 shall satisfy the requirement for submission of the "Statement of Compliance" required by paragraph 2d of this Section V.

f. The falsification of any of the above certifications may subject the contractor to civil or criminal prosecution under 18 U.S.C. 1001 and 31 U.S.C. 231.

g. The contractor or subcontractor shall make the records required under paragraph 2b of this Section V available for inspection, copying, or transcription by authorized representatives of the SHA, the FHWA, or the DOL, and shall permit such representatives to interview employees during working hours on the job. If the contractor or subcontractor fails to submit the required records or to make them available, the SHA, the FHWA, the DOL, or all may, after written notice to the contractor, sponsor, applicant, or owner, take such actions as may be necessary to cause the suspension of any further payment, advance, or guarantee of funds. Furthermore, failure to submit the required records upon request or to make such records available may be grounds for debarment action pursuant to 29 CFR 5.12.

VI. RECORD OF MATERIALS, SUPPLIES, AND LABOR

1. On all Federal-aid contracts on the National Highway System, except those which provide solely for the installation of protective devices at railroad grade crossings, those which are constructed on a force account or direct labor basis, highway beautification contracts, and contracts for which the total final construction cost for roadway and bridge is less than $1,000,000 (23 CFR 635) the contractor shall:

   a. Become familiar with the list of specific materials and supplies contained in Form FHWA-47, "Statement of Materials and Labor Used by Contractor of Highway Construction Involving Federal Funds," prior to the commencement of work under this contract.

   b. Maintain a record of the total cost of all materials and supplies purchased for and incorporated in the work, and also of the quantities of those specific materials and supplies listed on Form FHWA-47, and in the units shown on Form FHWA-47.

   c. Furnish, upon the completion of the contract, to the SHA resident engineer on Form FHWA-47 together with the data required in paragraph 1b relative to materials and supplies, a final labor summary of all contract work indicating the total hours worked and the total amount earned.

2. At the prime contractor's option, either a single report covering all contract work or separate reports for the contractor and for each subcontract shall be submitted.

VII. SUBLETTING OR ASSIGNING THE CONTRACT

1. The contractor shall perform with its own organization contract work amounting to not less than 30 percent (or a greater percentage if specified elsewhere in the contract) of the total original contract price, excluding any specialty items designated by the State. Specialty items may be performed by subcontract and the amount of any such specialty items performed may be deducted from the total original contract price before computing the amount of work required to be performed by the contractor's own organization (23 CFR 635).

   a. "Its own organization" shall be construed to include only workers employed and paid directly by the prime contractor and equipment owned or rented by the prime contractor,

with or without operators. Such term does not include employees or equipment of a subcontractor, assignee, or agent of the prime contractor.

b. "Specialty Items" shall be construed to be limited to work that requires highly specialized knowledge, abilities, or equipment not ordinarily available in the type of contracting organizations qualified and expected to bid on the contract as a whole and in general are to be limited to minor components of the overall contract.

2. The contract amount upon which the requirements set forth in paragraph 1 of Section VII is computed includes the cost of material and manufactured products which are to be purchased or produced by the contractor under the contract provisions.

3. The contractor shall furnish (a) a competent superintendent or supervisor who is employed by the firm, has full authority to direct performance of the work in accordance with the contract requirements, and is in charge of all construction operations (regardless of who performs the work) and (b) such other of its own organizational resources (supervision, management, and engineering services) as the SHA contracting officer determines is necessary to assure the performance of the contract.

4. No portion of the contract shall be sublet, assigned or otherwise disposed of except with the written consent of the SHA contracting officer, or authorized representative, and such consent when given shall not be construed to relieve the contractor of any responsibility for the fulfillment of the contract. Written consent will be given only after the SHA has assured that each subcontract is evidenced in writing and that it contains all pertinent provisions and requirements of the prime contract.

VIII. SAFETY: ACCIDENT PREVENTION

1. In the performance of this contract the contractor shall comply with all applicable Federal, State, and local laws governing safety, health, and sanitation (23 CFR 635). The contractor shall provide all safeguards, safety devices and protective equipment and take any other needed actions as it determines, or as the SHA contracting officer may determine, to be reasonably necessary to protect the life and health of employees on the job and the safety of the public and to protect property in connection with the performance of the work covered by the contract.

2. It is a condition of this contract, and shall be made a condition of each subcontract, which the contractor enters into pursuant to this contract, that the contractor and any subcontractor shall not permit any employee, in performance of the contract, to work in surroundings or under conditions which are unsanitary, hazardous or dangerous to his/her health or safety, as determined under construction safety and health standards (29 CFR 1926) promulgated by the Secretary of Labor, in accordance with Section 107 of the Contract Work Hours and Safety Standards Act (40 U.S.C. 333).

3. Pursuant to 29 CFR 1926.3, it is a condition of this contract that the Secretary of Labor or authorized representative thereof, shall have right of entry to any site of contract performance to inspect or investigate the matter of compliance with the construction safety and health

standards and to carry out the duties of the Secretary under Section 107 of the Contract Work Hours and Safety Standards Act (40 U.S.C. 333).

IX. FALSE STATEMENTS CONCERNING HIGHWAY PROJECTS In order to assure high quality and durable construction in conformity with approved plans and specifications and a high degree of reliability on statements and representations made by engineers, contractors, suppliers, and workers on Federal-aid highway projects, it is essential that all persons concerned with the project perform their functions as carefully, thoroughly, and honestly as possible. Willful falsification, distortion, or misrepresentation with respect to any facts related to the project is a violation of Federal law. To prevent any misunderstanding regarding the seriousness of these and similar acts, the following notice shall be posted on each Federal-aid highway project (23 CFR 635) in one or more places where it is readily available to all persons concerned with the project:

NOTICE TO ALL PERSONNEL ENGAGED ON FEDERAL-AID HIGHWAY PROJECTS

18 U.S.C. 1020 reads as follows:

"Whoever, being an officer, agent, or employee of the United States, or of any State or Territory, or whoever, whether a person, association, firm, or corporation, knowingly makes any false statement, false representation, or false report as to the character, quality, quantity, or cost of the material used or to be used, or the quantity or quality of the work performed or to be performed, or the cost thereof in connection with the submission of plans, maps, specifications, contracts, or costs of construction on any highway or related project submitted for approval to the Secretary of Transportation; or

Whoever knowingly makes any false statement, false representation, false report or false claim with respect to the character, quality, quantity, or cost of any work performed or to be performed, or materials furnished or to be furnished, in connection with the construction of any highway or related project approved by the Secretary of Transportation; or

Whoever knowingly makes any false statement or false representation as to material fact in any statement, certificate, or report submitted pursuant to provisions of the Federal-aid Roads Act approved July 1, 1916, (39 Stat. 355), as amended and supplemented;

Shall be fined not more that $10,000 or imprisoned not more than 5 years or both."

X. IMPLEMENTATION OF CLEAN AIR ACT AND FEDERAL WATER POLLUTION CONTROL ACT (Applicable to all Federal-aid construction contracts and to all related subcontracts of $100,000 or more.)

By submission of this bid or the execution of this contract, or subcontract, as appropriate, the bidder, Federal-aid construction contractor, or subcontractor, as appropriate, will be deemed to have stipulated as follows:

1. That any facility that is or will be utilized in the performance of this contract, unless such contract is exempt under the Clean Air Act, as amended (42 U.S.C. 1857 et seq., as amended by Pub.L. 91-604), and under the Federal Water Pollution Control Act, as amended (33 U.S.C. 1251 et seq., as amended by Pub.L. 92-500), Executive Order 11738, and regulations

in implementation thereof (40 CFR 15) is not listed, on the date of contract award, on the U.S. Environmental Protection Agency (EPA) List of Violating Facilities pursuant to 40 CFR 15.20.

2. That the firm agrees to comply and remain in compliance with all the requirements of Section 114 of the Clean Air Act and Section 308 of the Federal Water Pollution Control Act and all regulations and guidelines listed thereunder.

3. That the firm shall promptly notify the SHA of the receipt of any communication from the Director, Office of Federal Activities, EPA, indicating that a facility that is or will be utilized for the contract is under consideration to be listed on the EPA List of Violating Facilities.

4. That the firm agrees to include or cause to be included the requirements of paragraph 1 through 4 of this Section X in every nonexempt subcontract, and further agrees to take such action as the government may direct as a means of enforcing such requirements.

XI. CERTIFICATION REGARDING DEBARMENT, SUSPENSION, INELIGIBILITY AND VOLUNTARY EXCLUSION

1. Instructions for Certification - Primary Covered Transactions:
(Applicable to all Federal-aid contracts - 49 CFR 29)

   a. By signing and submitting this proposal, the prospective primary participant is providing the certification set out below.

   b. The inability of a person to provide the certification set out below will not necessarily result in denial of participation in this covered transaction. The prospective participant shall submit an explanation of why it cannot provide the certification set out below. The certification or explanation will be considered in connection with the department or agency's determination whether to enter into this transaction. However, failure of the prospective primary participant to furnish a certification or an explanation shall disqualify such a person from participation in this transaction.

   c. The certification in this clause is a material representation of fact upon which reliance was placed when the department or agency determined to enter into this transaction. If it is later determined that the prospective primary participant knowingly rendered an erroneous certification, in addition to other remedies available to the Federal Government, the department or agency may terminate this transaction for cause of default.

   d. The prospective primary participant shall provide immediate written notice to the department or agency to whom this proposal is submitted if any time the prospective primary participant learns that its certification was erroneous when submitted or has become erroneous by reason of changed circumstances.

   e. The terms "covered transaction," "debarred," "suspended," "ineligible," "lower tier covered transaction," "participant," "person," "primary covered transaction," "principal," "proposal," and "voluntarily excluded," as used in this clause, have the meanings set out

in the Definitions and Coverage sections of rules implementing Executive Order 12549. You may contact the department or agency to which this proposal is submitted for assistance in obtaining a copy of those regulations.

f. The prospective primary participant agrees by submitting this proposal that, should the proposed covered transaction be entered into, it shall not knowingly enter into any lower tier covered transaction with a person who is debarred, suspended, declared ineligible, or voluntarily excluded from participation in this covered transaction, unless authorized by the department or agency entering into this transaction.

g. The prospective primary participant further agrees by submitting this proposal that it will include the clause titled "Certification Regarding Debarment, Suspension, Ineligibility and Voluntary Exclusion-Lower Tier Covered Transaction," provided by the department or agency entering into this covered transaction, without modification, in all lower tier covered transactions and in all solicitations for lower tier covered transactions.

h. A participant in a covered transaction may rely upon a certification of a prospective participant in a lower tier covered transaction that is not debarred, suspended, ineligible, or voluntarily excluded from the covered transaction, unless it knows that the certification is erroneous. A participant may decide the method and frequency by which it determines the eligibility of its principals. Each participant may, but is not required to, check the nonprocurement portion of the "Lists of Parties Excluded From Federal Procurement or Nonprocurement Programs" (Nonprocurement List) which is compiled by the General Services Administration.

i. Nothing contained in the foregoing shall be construed to require establishment of a system of records in order to render in good faith the certification required by this clause. The knowledge and information of participant is not required to exceed that which is normally possessed by a prudent person in the ordinary course of business dealings.

j. Except for transactions authorized under paragraph f of these instructions, if a participant in a covered transaction knowingly enters into a lower tier covered transaction with a person who is suspended, debarred, ineligible, or voluntarily excluded from participation in this transaction, in addition to other remedies available to the Federal Government, the department or agency may terminate this transaction for cause or default.

****

Certification Regarding Debarment, Suspension, Ineligibility and Voluntary Exclusion--
Primary Covered Transactions

1. The prospective primary participant certifies to the best of its knowledge and belief, that it and its principals:

a. Are not presently debarred, suspended, proposed for debarment, declared ineligible, or voluntarily excluded from covered transactions by any Federal department or agency;

b. Have not within a 3-year period preceding this proposal been convicted of or had a civil judgment rendered against them for commission of fraud or a criminal offense in connection with obtaining, attempting to obtain, or performing a public (Federal, State or

local) transaction or contract under a public transaction; violation of Federal or State antitrust statutes or commission of embezzlement, theft, forgery, bribery, falsification or destruction of records, making false statements, or receiving stolen property;

c. Are not presently indicted for or otherwise criminally or civilly charged by a governmental entity (Federal, State or local) with commission of any of the offenses enumerated in paragraph 1b of this certification; and

d. Have not within a 3-year period preceding this application/proposal had one or more public transactions (Federal, State or local) terminated for cause or default.

2. Where the prospective primary participant is unable to certify to any of the statements in this certification, such prospective participant shall attach an explanation to this proposal.

****

2. Instructions for Certification - Lower Tier Covered Transactions: (Applicable to all subcontracts, purchase orders and other lower tier transactions of $25,000 or more - 49 CFR 29)

a. By signing and submitting this proposal, the prospective lower tier is providing the certification set out below.

b. The certification in this clause is a material representation of fact upon which reliance was placed when this transaction was entered into. If it is later determined that the prospective lower tier participant knowingly rendered an erroneous certification, in addition to other remedies available to the Federal Government, the department, or agency with which this transaction originated may pursue available remedies, including suspension and/or debarment.

c. The prospective lower tier participant shall provide immediate written notice to the person to which this proposal is submitted if at any time the prospective lower tier participant learns that its certification was erroneous by reason of changed circumstances.

d. The terms "covered transaction," "debarred," "suspended," "ineligible," "primary covered transaction," "participant," "person," "principal," "proposal," and "voluntarily excluded," as used in this clause, have the meanings set out in the Definitions and Coverage sections of rules implementing Executive Order 12549. You may contact the person to which this proposal is submitted for assistance in obtaining a copy of those regulations.

e. The prospective lower tier participant agrees by submitting this proposal that, should the proposed covered transaction be entered into, it shall not knowingly enter into any lower tier covered transaction with a person who is debarred, suspended, declared ineligible, or voluntarily excluded from participation in this covered transaction, unless authorized by the department or agency with which this transaction originated.

f. The prospective lower tier participant further agrees by submitting this proposal that it will include this clause titled "Certification Regarding Debarment, Suspension, Ineligibility and Voluntary Exclusion-Lower Tier Covered Transaction," without modification, in all lower tier covered transactions and in all solicitations for lower tier covered transactions.

g. A participant in a covered transaction may rely upon a certification of a prospective participant in a lower tier covered transaction that is not debarred, suspended, ineligible, or voluntarily excluded from the covered transaction, unless it knows that the certification is erroneous. A participant may decide the method and frequency by which it determines the eligibility of its principals. Each participant may, but is not required to, check the Nonprocurement List.

h. Nothing contained in the foregoing shall be construed to require establishment of a system of records in order to render in good faith the certification required by this clause. The knowledge and information of participant is not required to exceed that which is normally possessed by a prudent person in the ordinary course of business dealings.

i. Except for transactions authorized under paragraph e of these instructions, if a participant in a covered transaction knowingly enters into a lower tier covered transaction with a person who is suspended, debarred, ineligible, or voluntarily excluded from participation in this transaction, in addition to other remedies available to the Federal Government, the department or agency with which this transaction originated may pursue available remedies, including suspension and/or debarment.

****

Certification Regarding Debarment, Suspension, Ineligibility and Voluntary Exclusion--
Lower Tier Covered Transactions:

1. The prospective lower tier participant certifies, by submission of this proposal, that neither it nor its principals is presently debarred, suspended, proposed for debarment, declared ineligible, or voluntarily excluded from participation in this transaction by any Federal department or agency.

2. Where the prospective lower tier participant is unable to certify to any of the statements in this certification, such prospective participant shall attach an explanation to this proposal.

****

XII. CERTIFICATION REGARDING USE OF CONTRACT FUNDS FOR LOBBYING
(Applicable to all Federal-aid construction contracts and to all related subcontracts which exceed $100,000 - 49 CFR 20)

1. The prospective participant certifies, by signing and submitting this bid or proposal, to the best of his or her knowledge and belief, that:
   a. No Federal appropriated funds have been paid or will be paid, by or on behalf of the undersigned, to any person for influencing or attempting to influence an officer or employee of any Federal agency, a Member of Congress, an officer or employee of Congress, or an employee of a Member of Congress in connection with the awarding of any Federal contract, the making of any Federal grant, the making of any Federal loan, the entering into of any cooperative agreement, and the extension, continuation, renewal, amendment, or modification of any Federal contract, grant, loan, or cooperative agreement.

   b. If any funds other than Federal appropriated funds have been paid or will be paid to any person for influencing or attempting to influence an officer or employee of any Federal agency, a Member of Congress, an officer or employee of Congress, or an employee of a

Member of Congress in connection with this Federal contract, grant, loan, or cooperative agreement, the undersigned shall complete and submit Standard Form-LLL, "Disclosure Form to Report Lobbying," in accordance with its instructions.

2. This certification is a material representation of fact upon which reliance was placed when this transaction was made or entered into. Submission of this certification is a prerequisite for making or entering into this transaction imposed by 31 U.S.C. 1352. Any person who fails to file the required certification shall be subject to a civil penalty of not less than $10,000 and not more than $100,000 for each such failure.

3. The prospective participant also agrees by submitting his or her bid or proposal that he or she shall require that the language of this certification be included in all lower tier subcontracts, which exceed $100,000 and that all such recipients shall certify and disclose accordingly.

End of FHWA 1273

STATE OF MAINE
DEPARTMENT OF TRANSPORTATION

REST AREA SANITATION
STATE WIDE

SB-ME-99(002) PIN 008962.00 STP-1282(900)X PIN 12829.00 SB-ME-1(005) PIN 008857.14

ALUM OR AL ALUMINUM

BIT	BITUMINOUS
BM	BENCH MARK
BOT	BOTTOM
BRG	BEARING
CL	CENTER LINE
CLG	CEILING
CONC	CONCRETE
CONT	CONTINUOUS
CONST	CONSTRUCTION
CONTR	CONTRACTOR
DBL	DOUBLE
DC	DOOR CLOSER
DIA	DIAMETER
DIM	DIMENSION
DNA	DOES NOT APPLY
DR	DOOR
DTL	DETAIL
DWG	DRAWING
E	EAST
EA	EACH
EF	EACH FACE
EJ	EXPANSION JOINT
EL	ELEVATION
ELEC	ELECTRICAL
EQ	EQUAL
EW	EACH WAY
EXIST OR (E)	EXISTING
EXT	EXTERIOR
FCS	FLOOR COATING SYSTEM
FD	FLOOR DRAIN
FDN	FOUNDATION
FFE	FINISH FLOOR ELEVATION
FIN	FINISH
FIN. FLR.	FINISH FLOOR
FIN GR	FINISH GRADE
FL	FLOOR
FRMG	FRAMING
FRP	FIBERGLASS REIN. PLASTIC
FT	FEET (FOOT)
FV	FIELD VERIFY
GA	GUAGE
GB	GRAB BARS
GL	GLASS
HC	HANDICAP
HDR	HEADER
HORZ	HORIZONTAL
HT	HEIGHT
IN	INCHES
INSUL	INSULATION
INT	INTERIOR
MIN	MINIMUM
MISC	MISCELLANEOUS
MTL	METAL
N	NORTH
NA	NOT APPLICABLE
NIC	NOT IN CONTRACT
NTS	NOT TO SCALE
OC	ON CENTER
OD	OUTSIDE DIAMETER
OF	OUTSIDE FACE
OPNG	OPENING
OPP	OPPOSITE
P	PAINT
PTD	PAINTED
PL	PLATE
PLY	PLYWOOD
PNL	PANEL
PT	PRESSURE TREATED
PT & D	PAPER TOWEL AND WASTE DISPENSER
RE	REFER
REINF	REINFORCED
REQD	REQUIRED
RO	ROUGH OPENING
S	SOUTH
SD	SOAP DISPENSER
SCHED	SCHEDULE
SECT	SECTION
SHT	SHEET
SIM	SIMILAR
SPEC	SPECIFICATIONS
SQ	SQUARE
STD	STANDARD
STL	STEEL
STRUC	STRUCTURAL
THK	THICKNESS
TP	TOILET PAPER DISPENSER
TYP	TYPICAL
VERT	VERTICAL
W	WEST
W/	WITH
WD	WOOD

C1 ABBREVIATIONS
NO SCALE

1. ALL WORK SHALL CONFORM TO LOCAL AND STATE LAWS, ORDINANCES AND PREVAILING EDITIONS OF ADOPTED BUILDING CODES.

2. CONTRACTOR SHALL REVIEW AND VERIFY ALL EXISTING CONDITIONS PRIOR TO STARTING THE WORK AT ANY SITE.

3. WORK WITH GIVEN DIMENSIONS AND LARGE SCALE DETAILS. DO NOT SCALE THE DRAWINGS AS THE REPRODUCTIVE PROCESS TENDS TO DISTORT THE ACCURACY OF THE GRAPHIC SCALE INDICATED.

4. INSTALL SOLID BLOCKING AT WALL FRAMING BEHIND ALL SURFACE MOUNTED FIXTURES, TRIM AND HANDRAILS.

5. ROOF SHEATHING: ⅝" PLYWOOD, EXPOSURE 1, 24/16. 8d NAILS @ 6" O.C. ON PANEL EDGES, 12" O.C. ON INTERMEDIATE MEMBERS.

6. WALL SHEATHING: ½" PLYWOOD, EXPOSURE 1, 8d NAILS @ 6" O.C. ON PANEL EDGES, 12" O.C. ON INTERMEDIATE MEMBERS.

7. INSTALL ½" ANCHOR BOLTS @ 4'-0" O.C. AND WITH 4" MIN. EMBEDMENT.

8. FOUNDATION/SLAB SHALL BE CONSTRUCTED IN ACCORDANCE WITH CONCRETE SPECIFICATIONS.

A1 GENERAL NOTES
NO SCALE

WOOD BLOCKING
PLYWOOD
GYPSUM BOARD
BATT INSULATION
RIGID INSULATION
CONCRETE
GRAVEL
SOIL
WOOD FRAMING

E5 ARCHITECTURAL MATERIALS
NO SCALE

COLOR SCHEDULE CODE
BUILDING SECTION
WALL SECTION
DETAIL SECTION
CASEWORK ELEVATION/ INTERIOR ELEVATION
VERTICAL ELEVATION
PARTITION TYPE
STRUCTURAL CENTERLINE
EXTERIOR ELEVATION

B5 ARCHITECTURAL SYMBOLS
NO SCALE

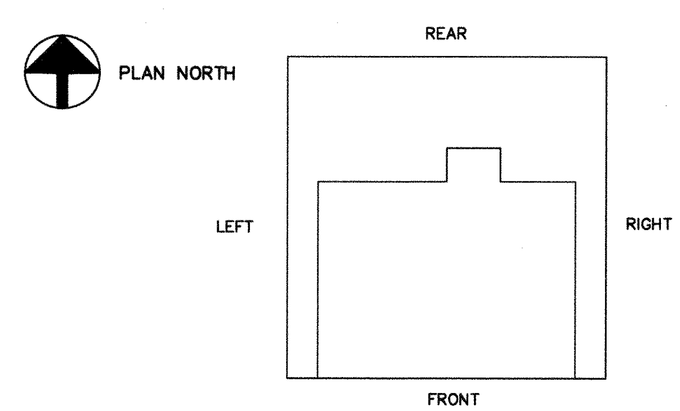

A5 ARCHITECTURAL KEY PLAN
NO SCALE

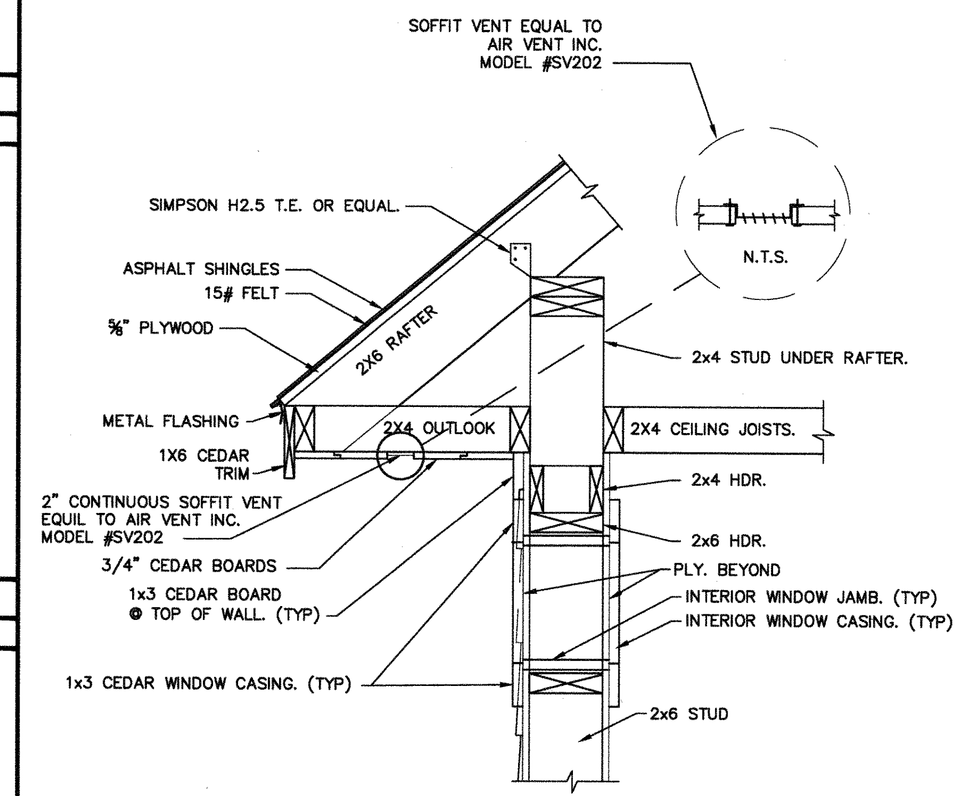

A7 SECTION @ WINDOWS (TYP)
1-1/2" = 1'-0"
EAVES SIMILAR

Allied Engineering
Structural Mechanical Electrical Commissioning
160 Veranda Street
Portland, Maine 04103
T: 207.221.2260
F: 207.221.2266
Web: www.allied-eng.com

Allied Project No: 06114 | Cad File: 06114A.DWG

STATE OF MAINE
DEPARTMENT OF TRANSPORTATION
APPROVED
COMMISSIONER: DATE 12/20/06
CHIEF ENGINEER: DATE 12/28/06

STATE OF MAINE WILLIAM P. FAUCHER ME 7133 PROFESSIONAL ENGINEER

PROJECT INFORMATION		SIGNATURE	DATE
PROGRAM			
PROJECT MANAGER	WPF	ME # 7133	
DESIGNER	WPF	P.E. NUMBER	
CONSULTANT	ALLIED ENGINEERING	12-27-06	
PROJECT RESIDENT			
CONTRACTOR			
PROJECT COMPLETION DATE			

STATE WIDE
REST AREA SANITATION
GENERAL NOTES, CODE ANALYSIS
SYMBOLS AND ABBREVIATIONS

© COPYRIGHT 2006 ALLIED ENGINEERING, INC.

SHEET NUMBER
1
1 OF 2

Filename: N:\Projects\2006\06114 ~ MDOT Privy Revisions\00 Drawing Files\06114A.dwg Dec 27, 2006 - 4:41pm
Date:
Division:
Username:

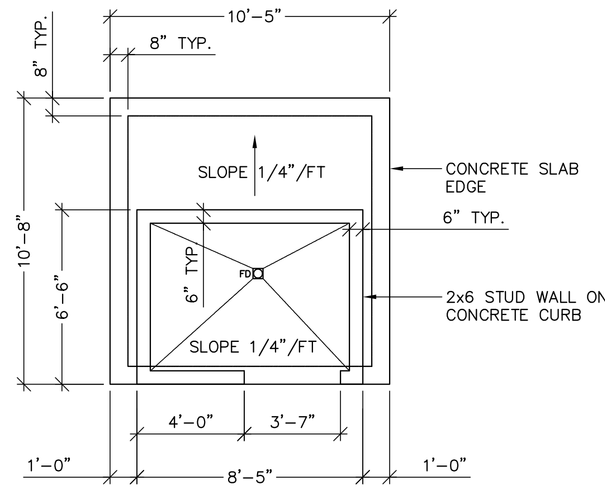

F1	SLAB FOUNDATION PLAN
1/4" = 1'-0"	

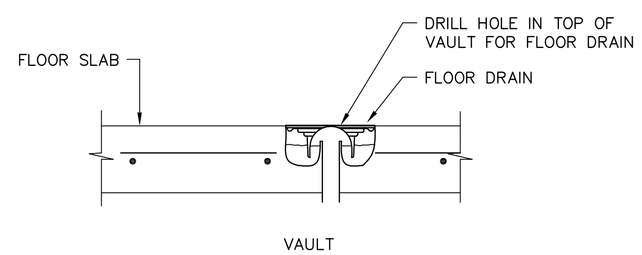

F3	FLOOR DRAIN DETAIL
N.T.S.	

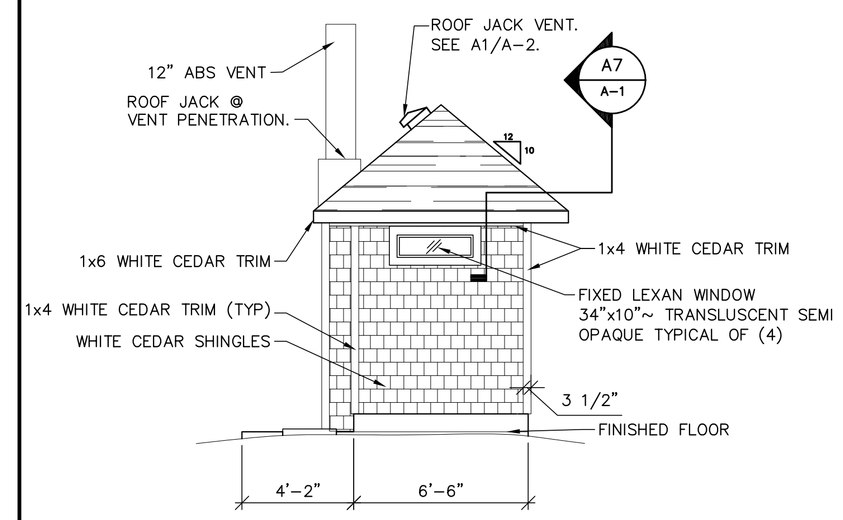

F5	END ELEVATION (TYPICAL)
1/4" = 1'-0"	

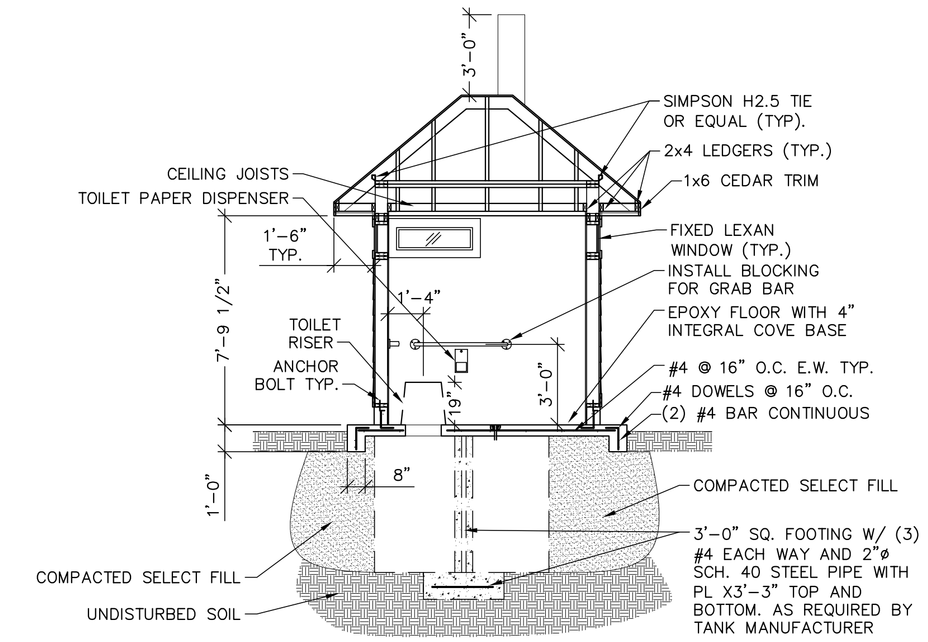

NOTE: SLAB SHALL BEAR EITHER ON COMPACTED FILL OR ON BEDROCK

E7	BUILDING SECTION
1/4" = 1'-0"	

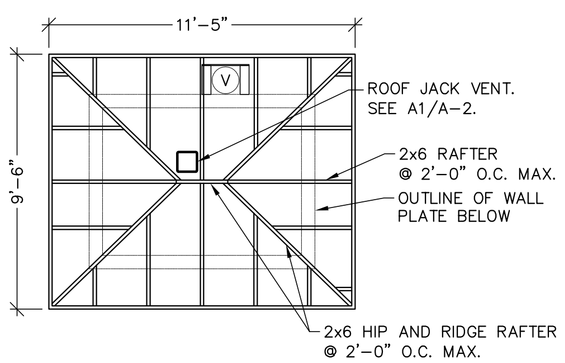

D1	ROOF PLAN
1/4" = 1'-0"	

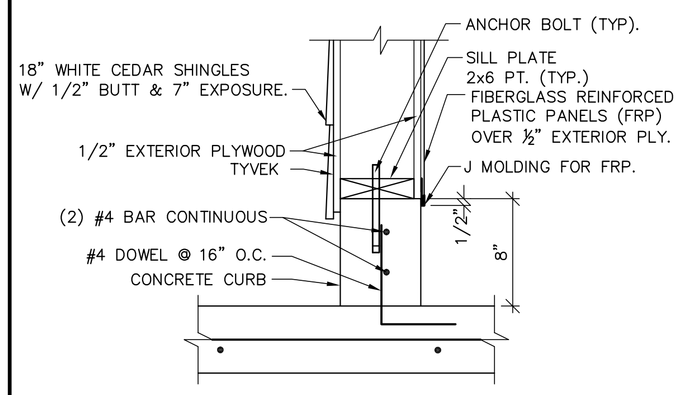

D3	WALL SECTION (TYPICAL)
1 1/2" = 1'-0"	

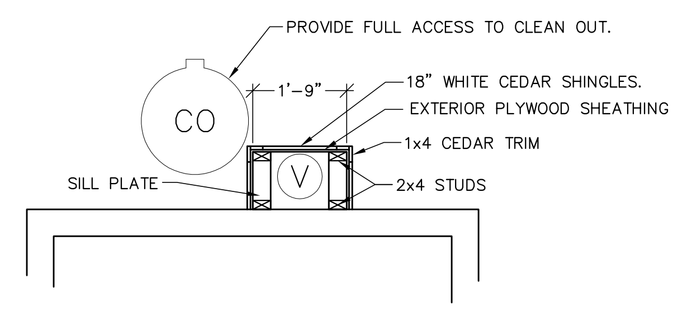

NOTE:
ADJUST FRAMING FOR VENT ENCLOSURE AS REQUIRED.

D5	VENT ENCLOSURE PLAN
1/2" = 1'-0"	

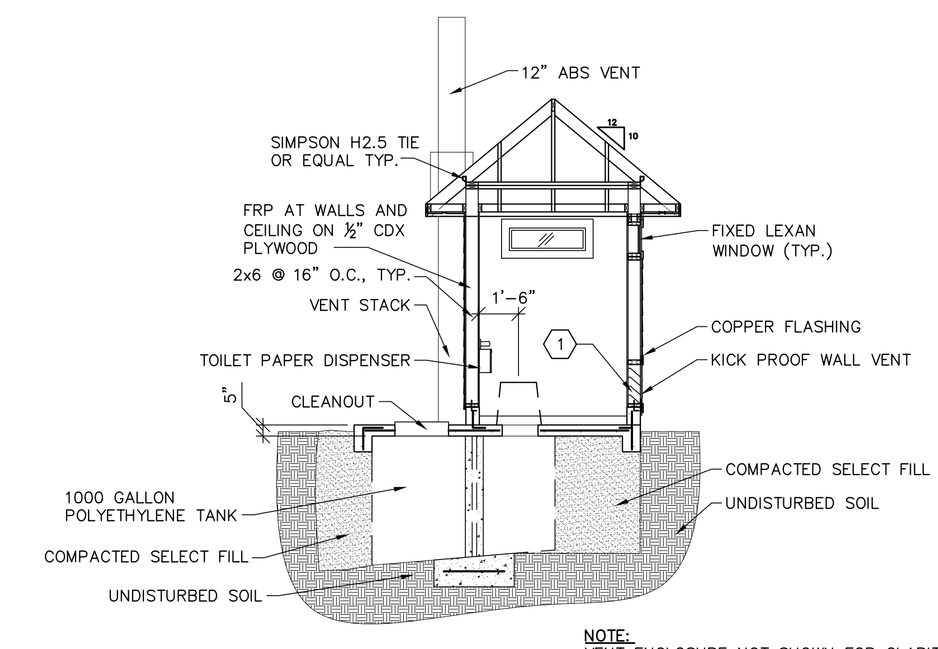

NOTE:
VENT ENCLOSURE NOT SHOWN FOR CLARITY.

C7	BUILDING SECTION
1/4" = 1'-0"	

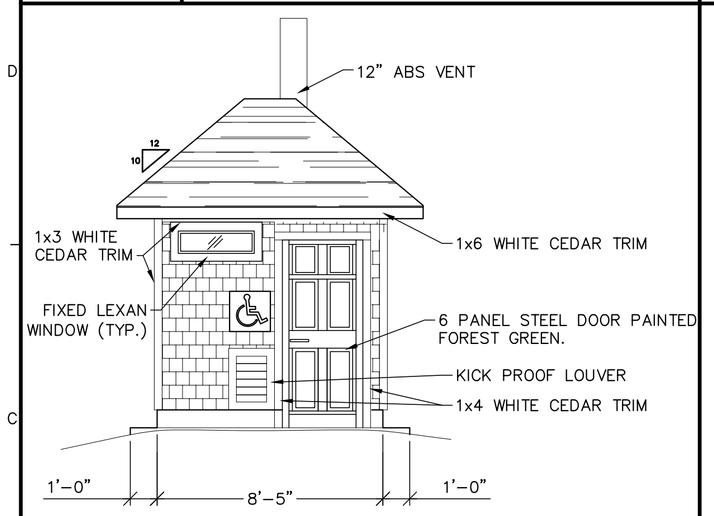

C1	FRONT ELEVATION
1/4" = 1'-0"	

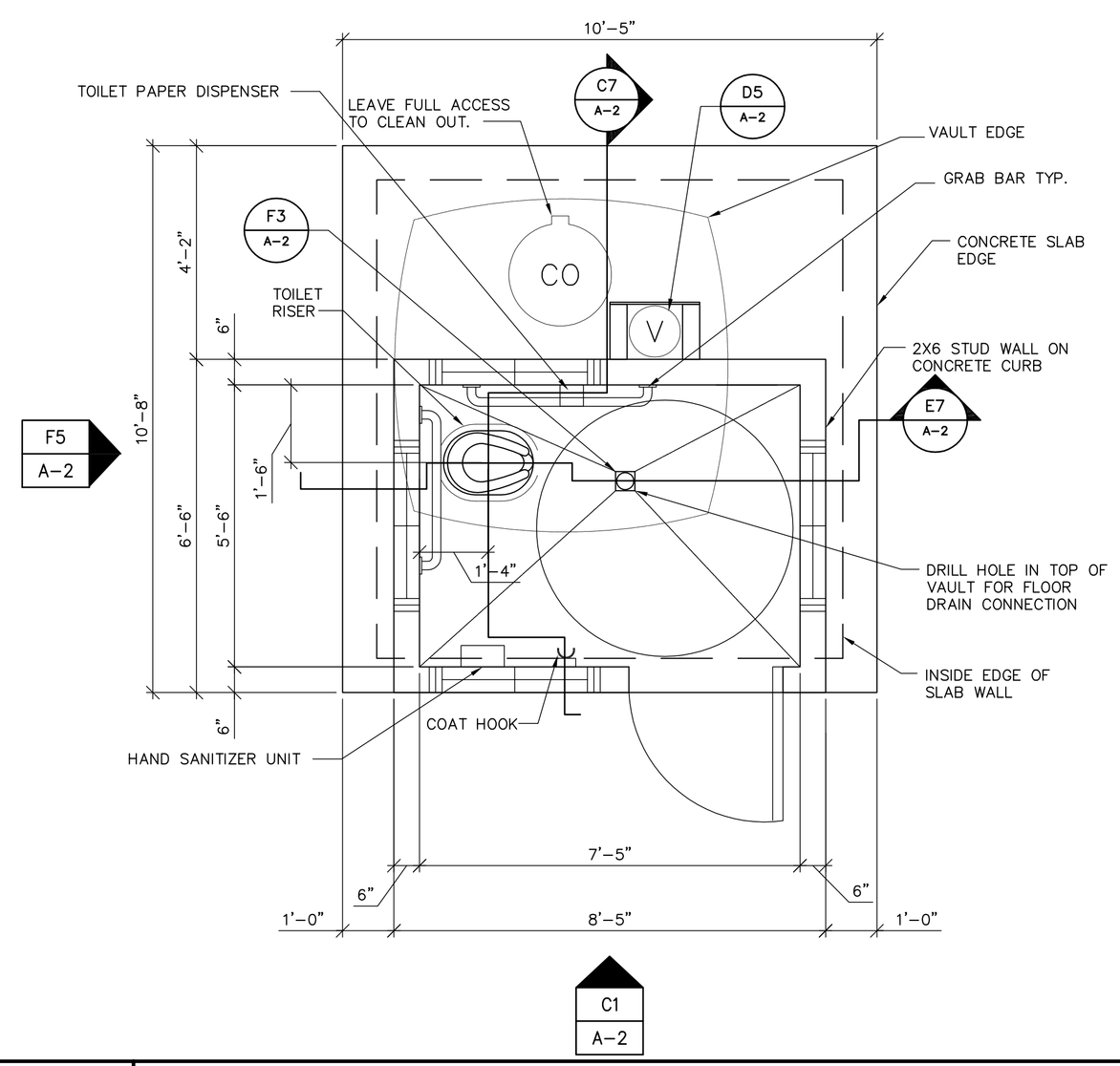

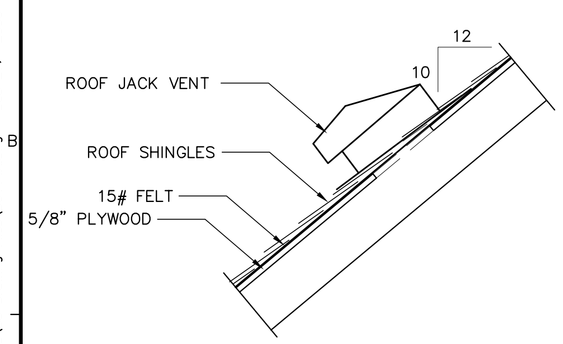

NOTE:

ROOF JACK VENT SHALL BE EQUAL TO COOK MODEL RJ 200

PROVIDE INTEGRAL FLASHING AND INSECT SCREEN.

DELETE BACKDRAFT DAMPERS.

A1	ROOF JACK VENT
1" = 1'-0"	

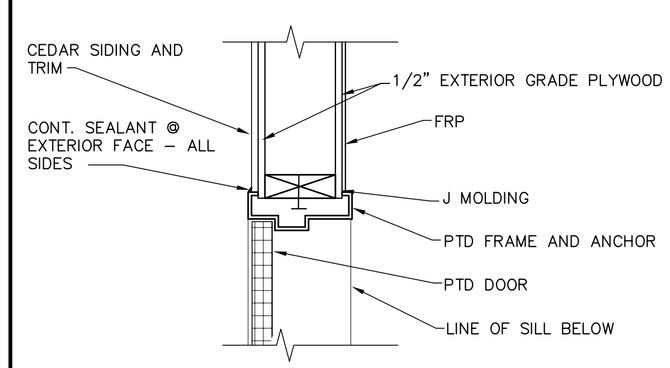

A3	FLOOR PLAN
1/2" = 1'-0"	

A7	DOOR JAMB
NO SCALE	

STATE OF MAINE
DEPARTMENT OF TRANSPORTATION

	DATE
FED PIN NO's: SB-ME-99(002)	
STP-1282(900)X, SB-ME-1(005)	
PIN NO's: 008962.00, 12829.00, 008857.14	

STATE OF MAINE
WILLIAM P. FAUCHER
#7133
PROFESSIONAL ENGINEER

SIGNATURE	
ME #7133	P.E. NUMBER
12-27-06	DATE

PROJECT INFORMATION

PROGRAM	
PROJECT MANAGER	WPF
DESIGNER	WPF
CONSULTANT	ALLIED ENGINEERING
PROJECT RESIDENT	
CONTRACTOR	
PROJECT COMPLETION DATE	

REST AREA SANITATION STATE WIDE

FLOOR PLAN, SECTIONS, ELEVATIONS AND DETAILS

© COPYRIGHT 2006 ALLIED ENGINEERING, INC.

Allied Engineering
Structural Mechanical Electrical Commissioning
160 Veranda Street
Portland, Maine 04103
T: 207.221.2260
F: 207.221.2266
Web: www.allied-eng.com

Allied Project No: 06114 | Cad File: 06114A.DWG

SHEET NUMBER
2
2 OF 2

Filename: N:\Projects\2006\06114 ~ MDOT Privy Revisions\00 Drawing Files\06114A.dwg Date: Dec 27, 2006 ~ 4:42pm Division: Username: