Updated 10/18/07

STATE PROJECT

August 01, 2007
Supersedes July 6, 2005

BIDDING INSTRUCTIONS

FOR ALL PROJECTS:

1. Use pen and ink to complete all paper Bids.

2. As a minimum, the following must be received prior to the time of Bid opening:

   For a Paper Bid:
   a) a copy of the Notice to Contractors, b) the completed Acknowledgement of Bid Amendments form, c) the completed Schedule of Items, d) two copies of the completed and signed Contract Offer, Agreement & Award form, e) a Bid Guaranty, and f) any other certifications or Bid requirements listed in the Bid Documents as due by Bid opening.

   For an Electronic Bid:
   a) a completed Bid using Expedite® software and submitted via the Bid Express™ web-based service, b) a Bid Guaranty (as described below) or a faxed copy of a Bid Bond (with original to be delivered within 72 hours), and c) any other certifications or Bid requirements listed in the Bid Documents as due by Bid opening.

3. Include prices for all required items in the Schedule of Items. ("Zero is not considered a Bid price.")

4. Include a Bid Guaranty. Acceptable forms are:

   a. a properly completed and signed Bid Bond on the Department's prescribed form (or on a form that does not contain any significant variations from the Department's form as determined by the Department) for 5% of the Bid Amount or

   b. an Official Bank Check, Cashier's Check, Certified Check, U.S. Postal Money Order or Negotiable Certificate of Deposit in the amount stated in the Notice to Contractors.

5. If a paper Bid is to be sent, Federal Express overnight delivery is suggested as the package is delivered directly to the DOT Headquarters Building located at 16 Child Street in Augusta. Other means, such as U.S. Postal Service's Express Mail has proven not to be reliable.

IN ADDITION, FOR FEDERAL AID PROJECTS:

6. Complete the DBE Proposed Utilization form in the proper amounts, and deliver to the Civil Rights Office, or fax to (207)624-3431 by 4:30 PM on bid opening day.

If you need further information regarding Bid preparation, call the DOT Contracts Section at (207)624-3410.

For complete bidding requirements, refer to Section 102 of the Maine Department of Transportation, Standard Specifications, Revision of December 2002.

January 30, 2004
Supercedes February 11, 2003

NOTICE

The Maine Department of Transportation is attempting to improve the way Bid Amendments/Addendums are handled, and allow for an electronic downloading of bid packages from our website, while continuing to maintain a planholders list.

Prospective bidders, subcontractors or suppliers who wish to download a copy of the bid package and receive a courtesy notification of project specific bid amendments, must provide an email address to Diane Barnes or David Venner at the MDOT Contracts mailbox at: MDOT.contracts@maine.gov. Each bid package will require a separate request.

Additionally, interested parties will be responsible for reviewing and retrieving the Bid Amendments from our web site, and acknowledging receipt and incorporating those Bid Amendments in their bids using the Acknowledgement of Bid Amendment Form.

The downloading of bid packages from the MDOT website is not the same as providing an electronic bid to the Department. Electronic bids must be submitted via http://www.BIDX.com. For information on electronic bidding contact Larry Childs at Larry.Childs@maine.gov.

STATE OF MAINE DEPARTMENT OF TRANSPORTATION

Bid Guaranty-Bid Bond Form

KNOW ALL MEN BY THESE PRESENTS THAT_____

_____, of the City/Town of _____and State of_____

as Principal, and _____as Surety, a

Corporation duly organized under the laws of the State of_____and having a usual place of

Business in _____and hereby held and firmly bound unto the Treasurer of

the State of Maine in the sum of_____,for payment which Principal and Surety bind

themselves, their heirs, executers, administrators, successors and assigns, jointly and severally.

The condition of this obligation is that the Principal has submitted to the Maine Department of Transportation, hereafter Department, a certain bid, attached hereto and incorporated as a part herein, to enter into a written contract for the construction of _____

_____

_____and if the Department shall accept said bid and the Principal shall execute and deliver a contract in the form attached hereto (properly completed in accordance with said bid) and shall furnish bonds for this faithful performance of said contract, and for the payment of all persons performing labor or furnishing material in connection therewith, and shall in all other respects perform the agreement created by the acceptance of said bid, then this obligation shall be null and void; otherwise it shall remain in full force, and effect.

Signed and sealed this_____day of _____20_____

WITNESS:

_____

_____

_____

WITNESS

_____

_____

_____

PRINCIPAL:

By_____

By:_____

By:_____

SURETY:

By_____

By:_____

Name of Local Agency: _____

SAMPLE

NOTICE

Bidders:

Please use the attached "Request for Information" form when faxing questions and comments concerning specific Contracts that have been Advertised for Bid. Include additional numbered pages as required. Questions are to be faxed to the number listed in the Notice to Contractors. This is the only allowable mechanism for answering Project specific questions. Maine DOT will not be bound to any answers to Project specific questions received during the Bidding phase through other processes.

State of Maine
Department of Transportation

REQUEST FOR INFORMATION

Date _____ Time _____

Information Requested: **PIN:** _____ **Town(s):** _____

_____

_____

_____

_____

_____

_____

_____

_____

_____

_____

_____

_____

Request by: _____ **Phone: (_____)**_____
Bid Date: _____ **Fax: (_____)**_____

Complete top portion of form and transmit to the number listed in the Notice to Contractors

RFI No: _____ **RFI received:** _____

Response:_____

_____

_____

_____

_____

_____

_____

_____

_____

_____

_____

Response By:_____ Date: _____

September 14, 2007

Vendor Registration

Prospective Bidders must register as a vendor with the Department of Administrative & Financial Services if the vendor is awarded a contract. Vendors will not be able to receive payment without first being registered. Vendors/Contractors will find information and register through the following link –
http://www.maine.gov/purchases/vendorinfo/vss.htm .

NOTICE

For security and other reasons, all Bid Packages which are mailed, shall be provided in double (one envelope inside the other) envelopes. The *Inner Envelope* shall have the following information provided on it:

Bid Enclosed - Do Not Open
PIN:
Town:
Date of Bid Opening:
Name of Contractor with mailing address and telephone number:

In Addition to the usual address information, the *Outer Envelope* should have written or typed on it:

Double Envelope: Bid Enclosed
PIN:
Town:
Date of Bid Opening:
Name of Contractor:
This should not be much of a change for those of you who use Federal Express or similar services.

Hand-carried Bids may be in one envelope as before, and should be marked with the following infrormation:

Bid Enclosed: Do Not Open
PIN:
Town:
Name of Contractor:

STATE OF MAINE DEPARTMENT OF TRANSPORTATION
NOTICE TO CONTRACTORS

Sealed Bids addressed to the Maine Department of Transportation, Augusta, Maine 04333 and endorsed on the wrapper "Bids for a **Strut Replacement in the Town of Weston**" will be received from contractors at the Reception Desk, Maine DOT Building, Child Street, Augusta, Maine, until 11 00 o'clock A M (prevailing time) on August 12, 2009 and at that time and place publicly opened and read Bids will accepted from all bidders The lowest responsive bidder must have completed, or successfully complete, a Highway, Bridge or project specific prequalification to be considered for the award of this contract **We now accept electronic bids for those bid packages posted on the bidx com website Electronic bids do not have to be accompanied by paper bids Please note the Department will accept a facsimile of the bid bond, however, the original bid bond must then be received at the MDOT Contract Section within 72 hours of the bid opening Until further notice, dual bids (one paper, one electronic) will be accepted, with the paper copy taking precedence**

Description Maine State, PIN 15968 00

Location In Aroostook County, project is located at Trout Brook on the Bancroft Road (C5601 at RLM 12 82)

Outline of Work Strut Replacement

For general information regarding Bidding and Contracting procedures, contact Scott Bickford at (207)624-3410 Our webpage at http //www maine gov/mdot/contractor-consultant-information/contractor_cons php contains a copy of the schedule of items, Plan Holders List, written portions of bid amendments (not drawings), and bid results For Project-specific information fax all questions to **Jon Bither** at (207)624-3431 Questions received after 12 00 noon of Monday prior to bid date will not be answered Bidders shall not contact any other Departmental staff for clarification of Contract provisions and the Department will not be responsible for any interpretations so obtained Hearing impaired persons may call the Telecommunication Device for the Deaf at 888-516-9364

Plans, specifications and bid forms may be seen at the Maine DOT Building in Augusta, Maine They may be purchased from the Department between the hours of 8 00 a m to 4 30 p m by cash credit card (Visa/Mastercard) or check payable to Treasurer, State of Maine sent to Maine Department of Transportation, Attn Mailroom 16 State House Station, Augusta, Maine 04333-0016 They also may be purchased by telephone at (207) 624-3536 between the hours of 8 00 a m to 4 30 p m Full size plans $9 00 ($12 50 by mail) Half size plans $4 50 ($7 50 by mail), Bid Book $10 ($13 by mail), Single Sheets $2 payment in advance, all non-refundable

Each Bid must be made upon blank forms provided by the Department and must be accompanied by a bid bond at 5% of the bid amount or an official bank check, cashier's check, certified check, certificate of deposit, or United States postal money order in the amount of $5,000 payable to Treasurer, State of Maine as a Bid guarantee A Contract Performance Surety Bond and a Contract Payment Surety Bond, each in the amount of 100 percent of the Contract price, will be required of the successful Bidder

This Contract is subject to all applicable Federal Laws All work shall be governed by ' State of Maine, Department of Transportation, Standard Specifications, Revision of December 2002", price $10 [$13 by mail], and Standard Details, Revision of December 2002, price $20 [$25 by mail] Standard Detail updates can be found at http //www maine gov/mdot/contractor-consultant-information/contractor_cons php

The right is hereby reserved to the MaineDOT to reject any or all bids

Augusta, Maine
July 29, 2009

JOHN E DORITY
CHIEF ENGINEER

STATE OF MAINE
JOHN
E
DORITY
No 2093
LICENSED
PROFESSIONAL ENGINEER

Weston
15968.00
August 3, 2004
Supercedes March 17, 2004

SPECIAL PROVISION 102.7.3
ACKNOWLEDGMENT OF BID AMENDMENTS

With this form, the Bidder acknowledges its responsibility to check for all Amendments to the Bid Package. For each Project under Advertisement, Amendments are located at http://www.maine.gov/mdot/comprehensive-list-projects/project-information.php It is the responsibility of the Bidder to determine if there are Amendments to the Project, to download them, to incorporate them into their Bid Package, and to reference the Amendment number and the date on the form below. The Maine DOT will not post Bid Amendments any later than noon the day before Bid opening without individually notifying all the planholders.

Amendment Number	Date

The Contractor, for itself, its successors and assigns, hereby acknowledges that it has received all of the above referenced Amendments to the Bid Package.

CONTRACTOR

_____
Date

_____
Signature of authorized representative

_____
(Name and Title Printed)

CONTRACT ID: 015968.00 PROJECT(S): 15968.00

CONTRACTOR :_____

LINE NO	ITEM DESCRIPTION	APPROX. QUANTITY AND UNITS	UNIT PRICE DOLLARS	UNIT PRICE CTS	BID AMOUNT DOLLARS	BID AMOUNT CTS
	SECTION 0001 PROJECT ITEMS					
0010	201.11 CLEARING	0.140 AC				
0020	202.203 PAVEMENT BUTT JOINTS	250.000 SY				
0030	204.20 ADD SHOULDER AGGREGATE TO EXISTING SHOULDER, PLAN QUANTITY	100.000 SY				
0040	204.41 REHABILITATION OF EXISTING SHOULDERS, PLAN QUANTITY	190.000 SY				
0050	206.07 STRUCTURAL ROCK EXCAVATION - DRAINAGE AND MINOR STRUCTURES	30.000 CY				
0060	211.21 INSLOPE REHABILITATION	580.000 LF				
0070	304.10 AGGREGATE SUBBASE COURSE - GRAVEL	90.000 CY				
0080	403.210 HOT MIX ASPHALT 9.5 MM HMA	80.000 T				
0090	403.211 HOT MIX ASPHALT (SHIMMING)	50.000 T				
0100	403.213 HOT MIX ASPHALT 12.5 MM BASE	60.000 T				

CONTRACT ID: 015968.00 PROJECT(S): 15968.00

CONTRACTOR :_____

LINE NO	ITEM DESCRIPTION	APPROX. QUANTITY AND UNITS	UNIT PRICE DOLLARS	UNIT PRICE CTS	BID AMOUNT DOLLARS	BID AMOUNT CTS
0120	504.07 CONCRETE PIPE TIES	4.000 GP				
0130	603.255 60 INCH REINFORCED CONCRETE PIPE CLASS III	152.000 LF				
0140	606.23 GUARDRAIL TYPE 3C - SINGLE RAIL	225.000 LF				
0150	606.231 GUARDRAIL TYPE 3C - 15 FOOT RADIUS AND LESS	50.000 LF				
0160	606.259 ANCHORAGE ASSEMBLY	2.000 EA				
0170	606.265 TERMINAL END - SINGLE RAIL - GALVANIZED STEEL	2.000 EA				
0180	606.353 REFLECTORIZED FLEXIBLE GUARDRAIL MARKER	6.000 EA				
0190	610.08 PLAIN RIPRAP	50.000 CY				
0200	618.1401 SEEDING METHOD NUMBER 2 - PLAN QUANTITY	18.000 UN				
0210	619.1201 MULCH - PLAN QUANTITY	18.000 UN				
0220	620.58 NONWOVEN GEOTEXTILE	100.000 SY				

CONTRACT ID: 015968.00 PROJECT(S): 15968.00

CONTRACTOR :_____

LINE NO	ITEM DESCRIPTION	APPROX. QUANTITY AND UNITS	UNIT PRICE DOLLARS	UNIT PRICE CTS	BID AMOUNT DOLLARS	BID AMOUNT CTS
0230	627.811 TEMPORARY BI-DIRECTIONAL YELLOW DELINEATORS	30.000 EA				
0240	629.05 HAND LABOR, STRAIGHT TIME	5.000 HR				
0250	631.12 ALL PURPOSE EXCAVATOR (INCLUDING OPERATOR)	10.000 HR				
0260	631.132 SMALL BULLDOZER (INCLUDING OPERATOR)	5.000 HR				
0270	631.14 GRADER (INCLUDING OPERATOR)	5.000 HR				
0280	631.172 TRUCK - LARGE (INCLUDING OPERATOR)	5.000 HR				
0290	631.18 CHAIN SAW RENTAL (INCLUDING OPERATOR)	5.000 HR				
0300	652.33 DRUM	6.000 EA				
0310	652.34 CONE	20.000 EA				
0320	652.35 CONSTRUCTION SIGNS	230.000 SF				
0330	652.36 MAINTENANCE OF TRAFFIC CONTROL DEVICES	60.000 CD				

CONTRACT ID: 015968.00 PROJECT(S): 15968.00

CONTRACTOR :_____

LINE NO	ITEM DESCRIPTION	APPROX. QUANTITY AND UNITS	UNIT PRICE DOLLARS	UNIT PRICE CTS	BID AMOUNT DOLLARS	BID AMOUNT CTS
0340	652.38 FLAGGER	600.000 HR				
0350	656.75 TEMPORARY SOIL EROSION AND WATER POLLUTION CONTROL	LUMP	LUMP			
0360	659.10 MOBILIZATION	LUMP	LUMP			
	SECTION 0001 TOTAL					
	TOTAL BID					

CONTRACT AGREEMENT, OFFER & AWARD

AGREEMENT made on the date last signed below, by and between the State of Maine, acting through and by its Department of Transportation (Department), an agency of state government with its principal administrative offices located at Child Street, Augusta, Maine, with a mailing address at 16 State House Station, Augusta, Maine 04333-0016, and _____

_____

a corporation or other legal entity organized under the laws of the State of _____, with its principal place of business located at _____

_____

The Department and the Contractor, in consideration of the mutual promises set forth in this Agreement (the "Contract"), hereby agree as follows:

A. The Work.

The Contractor agrees to complete all Work as specified or indicated in the Contract including Extra Work in conformity with the Contract, PIN No. **15968.00, for the Strut Replacement in the Town of Weston, County of Aroostook, Maine.** The Work includes construction, maintenance during construction, warranty as provided in the Contract, and other incidental work.

The Contractor shall be responsible for furnishing all supervision, labor, equipment, tools supplies, permanent materials and temporary materials required to perform the Work including construction quality control including inspection, testing and documentation, all required documentation at the conclusion of the project, warranting its work and performing all other work indicated in the Contract.

The Department shall have the right to alter the nature and extent of the Work as provided in the Contract; payment to be made as provided in the same.

B. Time.

The Contractor agrees to complete all Work, except warranty work, on or before **August 28, 2010.** Further, the Department may deduct from moneys otherwise due the Contractor, not as a penalty, but as Liquidated Damages in accordance with Sections 107.7 and 107.8 of the State of Maine Department of Transportation Standard Specifications, Revision of December 2002 and related Special Provisions.

C. Price.

The quantities given in the Schedule of Items of the Bid Package will be used as the basis for determining the original Contract amount and for determining the amounts of the required Performance Surety Bond and Payment Surety Bond, and that the amount of this offer is _____

_____

$_____ Performance Bond and Payment Bond each being 100% of the amount of this Contract.

D. Contract.

This Contract, which may be amended, modified, or supplemented in writing only, consists of the Contract documents as defined in the Plans, Standard Specifications, Revision of December 2002, Standard Details Revision of December 2002 as updated through advertisement, Supplemental Specifications, Special Provisions, Contract Agreement; and Contract Bonds. It is agreed and understood that this Contract will be governed by the documents listed above.

E. Certifications.

By signing below, the Contractor hereby certifies that to the best of the Contractor's knowledge and belief:

1. All of the statements, representations, covenants, and/or certifications required or set forth in the Bid and the Bid Documents, including those in the Federal Contract Provisions Supplement, and the Contract are still complete and accurate as of the date of this Agreement.

2. The Contractor knows of no legal, contractual, or financial impediment to entering into this Contract.

3. The person signing below is legally authorized by the Contractor to sign this Contract on behalf of the Contractor and to legally bind the Contractor to the terms of the Contract.

F. Offer.

The undersigned, having carefully examined the site of work, the Plans, Standard Specifications Revision of December 2002, Standard Details Revision of December 2002 as updated through advertisement, Supplemental Specifications, Special Provisions, Contract Agreement; and Contract Bonds contained herein for construction of:
PIN No. **15968.00, for the Strut Replacement in the Town of Weston, County of Aroostook,** State of Maine, on which bids will be received until the time specified in the "Notice to Contractors" do(es) hereby bid and offer to enter into this contract to supply all the materials, tools, equipment and labor to construct the whole of the Work in strict accordance with the terms and conditions of this Contract at the unit prices in the attached "Schedule of Items".

The Offeror agrees to perform the work required at the price specified above and in accordance with the bids provided in the attached "Schedule of Items" in strict accordance with the terms of this solicitation, and to provide the appropriate insurance and bonds if this offer is accepted by the Government in writing.

As Offeror also agrees:

First: To do any extra work, not covered by the attached "Schedule of Items", which may be ordered by the Resident, and to accept as full compensation the amount determined upon a "Force Account" basis as provided in the Standard Specifications, Revision of December 2002, and as addressed in the contract documents.

Second: That the bid bond at 5% of the bid amount or the official bank check, cashier's check, certificate of deposit or U. S. Postal Money Order in the amount given in the "Notice to Contractors", payable to the Treasurer of the State of Maine and accompanying this bid, shall be forfeited, as liquidated damages, if in case this bid is accepted, and the undersigned shall fail to abide by the terms and conditions of the offer and fail to furnish satisfactory insurance and Contract bonds under the conditions stipulated in the Specifications within 15 days of notice of intent to award the contract.

Third: To begin the Work as stated in Section 107.2 of the Standard Specifications Revision of December 2002 and complete the Work within the time limits given in the Special Provisions of this Contract.

Fourth: The Contractor will be bound to the Disadvantaged Business Enterprise (DBE) Requirements contained in the attached Notice (Additional Instructions to Bidders) and submit a completed Contractor's Disadvantaged Business Enterprise Utilization Plan with their bid.

Fifth: That this offer shall remain open for 30 calendar days after the date of opening of bids.

Sixth: The Bidder hereby certifies, to the best of its knowledge and belief that: the Bidder has not, either directly or indirectly, entered into any agreement, participated in any collusion, or otherwise taken any action in restraint of competitive bidding in connection with its bid, and its subsequent contract with the Department.

IN WITNESS WHEREOF, the Contractor, for itself, its successors and assigns, hereby execute two duplicate originals of this Agreement and thereby binds itself to all covenants, terms, and obligations contained in the Contract Documents.

CONTRACTOR

_____	_____
Date	(Signature of Legally Authorized Representative of the Contractor)
_____	_____
Witness	(Name and Title Printed)

G. Award.

Your offer is hereby accepted. This award consummates the Contract, and the documents referenced herein.

MAINE DEPARTMENT OF TRANSPORTATION

_____	_____
Date	By: David A. Cole, Commissioner
_____	
Witness	

CONTRACT AGREEMENT, OFFER & AWARD

AGREEMENT made on the date last signed below, by and between the State of Maine, acting through and by its Department of Transportation (Department), an agency of state government with its principal administrative offices located at Child Street, Augusta, Maine, with a mailing address at 16 State House Station, Augusta, Maine 04333-0016, and _____

_____

a corporation or other legal entity organized under the laws of the State of _____, with its principal place of business located at _____

_____

The Department and the Contractor, in consideration of the mutual promises set forth in this Agreement (the "Contract"), hereby agree as follows:

A. The Work.

The Contractor agrees to complete all Work as specified or indicated in the Contract including Extra Work in conformity with the Contract, PIN No. **15968.00, for the Strut Replacement in the Town of Weston, County of Aroostook, Maine.** The Work includes construction, maintenance during construction, warranty as provided in the Contract, and other incidental work.

The Contractor shall be responsible for furnishing all supervision, labor, equipment, tools supplies, permanent materials and temporary materials required to perform the Work including construction quality control including inspection, testing and documentation, all required documentation at the conclusion of the project, warranting its work and performing all other work indicated in the Contract.

The Department shall have the right to alter the nature and extent of the Work as provided in the Contract; payment to be made as provided in the same.

B. Time.

The Contractor agrees to complete all Work, except warranty work, on or before **August 28, 2010.** Further, the Department may deduct from moneys otherwise due the Contractor, not as a penalty, but as Liquidated Damages in accordance with Sections 107.7 and 107.8 of the State of Maine Department of Transportation Standard Specifications, Revision of December 2002 and related Special Provisions.

C. Price.

The quantities given in the Schedule of Items of the Bid Package will be used as the basis for determining the original Contract amount and for determining the amounts of the required Performance Surety Bond and Payment Surety Bond, and that the amount of this offer is _____

_____

$_____ Performance Bond and Payment Bond each being 100% of the amount of this Contract.

D. Contract.

This Contract, which may be amended, modified, or supplemented in writing only, consists of the Contract documents as defined in the Plans, Standard Specifications, Revision of December 2002, Standard Details Revision of December 2002 as updated through advertisement, Supplemental Specifications, Special Provisions, Contract Agreement; and Contract Bonds. It is agreed and understood that this Contract will be governed by the documents listed above.

E. Certifications.

By signing below, the Contractor hereby certifies that to the best of the Contractor's knowledge and belief:

1. All of the statements, representations, covenants, and/or certifications required or set forth in the Bid and the Bid Documents, including those in the Federal Contract Provisions Supplement, and the Contract are still complete and accurate as of the date of this Agreement.

2. The Contractor knows of no legal, contractual, or financial impediment to entering into this Contract.

3. The person signing below is legally authorized by the Contractor to sign this Contract on behalf of the Contractor and to legally bind the Contractor to the terms of the Contract.

F. Offer.

The undersigned, having carefully examined the site of work, the Plans, Standard Specifications Revision of December 2002, Standard Details Revision of December 2002 as updated through advertisement, Supplemental Specifications, Special Provisions, Contract Agreement; and Contract Bonds contained herein for construction of:
PIN No. **15968.00, for the Strut Replacement in the Town of Weston, County of Aroostook,** State of Maine, on which bids will be received until the time specified in the "Notice to Contractors" do(es) hereby bid and offer to enter into this contract to supply all the materials, tools, equipment and labor to construct the whole of the Work in strict accordance with the terms and conditions of this Contract at the unit prices in the attached "Schedule of Items".

The Offeror agrees to perform the work required at the price specified above and in accordance with the bids provided in the attached "Schedule of Items" in strict accordance with the terms of this solicitation, and to provide the appropriate insurance and bonds if this offer is accepted by the Government in writing.

As Offeror also agrees:

First: To do any extra work, not covered by the attached "Schedule of Items", which may be ordered by the Resident, and to accept as full compensation the amount determined upon a "Force Account" basis as provided in the Standard Specifications, Revision of December 2002, and as addressed in the contract documents.

Second: That the bid bond at 5% of the bid amount or the official bank check, cashier's check, certificate of deposit or U. S. Postal Money Order in the amount given in the "Notice to Contractors", payable to the Treasurer of the State of Maine and accompanying this bid, shall be forfeited, as liquidated damages, if in case this bid is accepted, and the undersigned shall fail to abide by the terms and conditions of the offer and fail to furnish satisfactory insurance and Contract bonds under the conditions stipulated in the Specifications within 15 days of notice of intent to award the contract.

Third: To begin the Work as stated in Section 107.2 of the Standard Specifications Revision of December 2002 and complete the Work within the time limits given in the Special Provisions of this Contract.

Fourth: The Contractor will be bound to the Disadvantaged Business Enterprise (DBE) Requirements contained in the attached Notice (Additional Instructions to Bidders) and submit a completed Contractor's Disadvantaged Business Enterprise Utilization Plan with their bid.

Fifth: That this offer shall remain open for 30 calendar days after the date of opening of bids.

Sixth: The Bidder hereby certifies, to the best of its knowledge and belief that: the Bidder has not, either directly or indirectly, entered into any agreement, participated in any collusion, or otherwise taken any action in restraint of competitive bidding in connection with its bid, and its subsequent contract with the Department.

IN WITNESS WHEREOF, the Contractor, for itself, its successors and assigns, hereby execute two duplicate originals of this Agreement and thereby binds itself to all covenants, terms, and obligations contained in the Contract Documents.

CONTRACTOR

_____	_____
Date	(Signature of Legally Authorized Representative of the Contractor)
_____	_____
Witness	(Name and Title Printed)

G. Award.

Your offer is hereby accepted. This award consummates the Contract, and the documents referenced herein.

MAINE DEPARTMENT OF TRANSPORTATION

_____	_____
Date	By: David A. Cole, Commissioner
_____	
Witness	

CONTRACT AGREEMENT, OFFER & AWARD

AGREEMENT made on the date last signed below, by and between the State of Maine, acting through and by its Department of Transportation (Department), an agency of state government with its principal administrative offices located at Child Street Augusta, Maine, with a mailing address at 16 State House Station, Augusta, Maine 04333-0016, and **(Name of the firm bidding the job)** a corporation or other legal entity organized under the laws of the State of Maine, with its principal place of business located at **(address of the firm bidding the job)**

The Department and the Contractor, in consideration of the mutual promises set forth in this Agreement (the "Contract"), hereby agree as follows:

SAMPLE

A. The Work.

The Contractor agrees to complete all Work as specified or indicated in the Contract including Extra Work in conformity with the Contract, PIN No.**1224.00**, for the **Hot Mix Asphalt Overlay** in the town/city of **South Nowhere,** County of **Washington**, Maine. The Work includes construction, maintenance during construction, warranty as provided in the Contract, and other incidental work.

The Contractor shall be responsible for furnishing all supervision, labor, equipment, tools supplies, permanent materials and temporary materials required to perform the Work including construction quality control including inspection, testing and documentation, all required documentation at the conclusion of the project, warranting its work and performing all other work indicated in the Contract.

The Department shall have the right to alter the nature and extent of the Work as provided in the Contract; payment to be made as provided in the same.

B. Time.

The Contractor agrees to complete all Work, except warranty work, on or before **November 15, 2006.** Further, the Department may deduct from moneys otherwise due the Contractor, not as a penalty, but as Liquidated Damages in accordance with Sections 107.7 and 107.8 of the State of Maine Department of Transportation Standard Specifications, Revision of December 2002 and related Special Provisions.

C. Price.

The quantities given in the Schedule of Items of the Bid Package will be used as the basis for determining the original Contract amount and for determining the amounts of the required Performance Surety Bond and Payment Surety Bond, and that the amount of this offer is **____(Place bid here in alphabetical form such as One Hundred and Two dollars and 10 cents)** **$_ (repeat bid here in numerical terms, such as $102.10)**_____ Performance Bond and Payment Bond each being 100% of the amount of this Contract.

D. Contract.

This Contract, which may be amended, modified, or supplemented in writing only, consists of the Contract documents as defined in the Plans, Standard Specifications, Revision of December 2002, Standard Details Revision of December 2002, Supplemental Specifications, Special Provisions, Contract Agreement; and Contract Bonds. It is agreed and understood that this Contract will be governed by the documents listed above.

E. Certifications.

By signing below, the Contractor hereby certifies that to the best of the Contractor's knowledge and belief:

1. All of the statements, representations, covenants, and/or certifications required or set forth in the Bid and the Bid Documents, including those in Appendix A to Division 100 of the Standard Specifications Revision of December 2002 (Federal Contract Provisions Supplement), and the Contract are still complete and accurate as of the date of this Agreement.

2. The Contractor knows of no legal, contractual, or financial impediment to entering into this Contract.

3. The person signing below is legally authorized by the Contractor to sign this Contract on behalf of the Contractor and to legally bind the Contractor to the terms of the Contract.

SAMPLE

F. Offer.

The undersigned, having carefully examined the site of work, the Plans, Standard Specifications, Revision of December 2002, Standard Details Revision of December 2002, Supplemental Specifications, Special Provisions, Contract Agreement; and Contract Bonds contained herein for construction of:

PIN 1234.00 South Nowhere, Hot Mix Asphalt Overlay,

State of Maine, on which bids will be received until the time specified in the "Notice to Contractors" do(es) hereby bid and offer to enter into this contract to supply all the materials, tools, equipment and labor to construct the whole of the Work in strict accordance with the terms and conditions of this Contract at the unit prices in the attached "Schedule of Items".

The Offeror agrees to perform the work required at the price specified above and in accordance with the bids provided in the attached "Schedule of Items" in strict accordance with the terms of this solicitation, and to provide the appropriate insurance and bonds if this offer is accepted by the Government in writing.

As Offeror also agrees:

First: To do any extra work, not covered by the attached "Schedule of Items", which may be ordered by the Resident, and to accept as full compensation the amount determined upon a "Force Account" basis as provided in the Standard Specifications, Revision of December 2002, and as addressed in the contract documents.

Second: That the bid bond at 5% of the bid amount or the official bank check, cashier's check, certificate of deposit or U. S. Postal Money Order in the amount given in the "Notice to Contractors", payable to the Treasurer of the State of Maine and accompanying this bid, shall be forfeited, as liquidated damages, if in case this bid is accepted, and the undersigned shall fail to abide by the terms and conditions of the offer and fail to furnish satisfactory insurance and Contract bonds under the conditions stipulated in the Specifications within 15 days of notice of intent to award the contract.

Third: To begin the Work as stated in Section 107.2 of the Standard Specifications Revision of 2002 and complete the Work within the time limits given in the Special Provisions of this Contract.

Fourth: The Contractor will be bound to the Disadvantaged Business Enterprise (DBE) Requirements contained in the attached Notice (Additional Instructions to Bidders) and submit a completed Contractor's Disadvantaged Business Enterprise Utilization Plan with their bid.

Fifth: That this offer shall remain open for 30 calendar days after the date of opening of bids.

SAMPLE

Sixth: The Bidder hereby certifies, to the best of its knowledge and belief that: the Bidder has not, either directly or indirectly, entered into any agreement, participated in any collusion, or otherwise taken any action in restraint of competitive bidding in connection with its bid, and its subsequent contract with the Department.

IN WITNESS WHEREOF, the Contractor, for itself, its successors and assigns, hereby execute two duplicate originals of this Agreement and thereby binds itself to all covenants, terms, and obligations contained in the Contract Documents.

CONTRACTOR

_____	**(Sign Here)**
Date	(Signature of Legally Authorized Representative of the Contractor)
____(**Witness Sign Here)**	**(Print Name Here)**
Witness	(Name and Title Printed)

SAMPLE

G. Award.

Your offer is hereby accepted. This award consummates the Contract, and the documents referenced herein.

MAINE DEPARTMENT OF TRANSPORTATION

_____	_____
Date	By: David A. Cole, Commissioner

_____
(Witness)

BOND # _____

CONTRACT PERFORMANCE BOND
(Surety Company Form)

KNOW ALL MEN BY THESE PRESENTS: That _____ _____ **and the State of** _____, as principal, and…….....,
a corporation duly organized under the laws of the State of ..... and having a usual place of business ....,
as Surety, are held and firmly bound unto the Treasurer of the State of Maine in the sum of _____ **and 00/100 Dollars ($)**, to be paid said Treasurer of the State of Maine or his successors in office, for which payment well and truly to be made, Principal and Surety bind themselves, their heirs, executors and administrators, successors and assigns, jointly and severally by these presents.

The condition of this obligation is such that if the Principal designated as Contractor in the Contract to construct Project Number _____ in the Municipality of _____ promptly and faithfully performs the Contract, then this obligation shall be null and void; otherwise it shall remain in full force and effect.

The Surety hereby waives notice of any alteration or extension of time made by the State of Maine.

Signed and sealed this ..... day of ....., 20….. .

WITNESSES:	SIGNATURES:
	CONTRACTOR:
Signature.....	.....….....
Print Name Legibly	Print Name Legibly ...…….....
	SURETY:
Signature	.....…….....
Print Name Legibly	Print Name Legibly .....
SURETY ADDRESS:	NAME OF LOCAL AGENCY:
.....	ADDRESS .....
.....	...…….....
.....	.....…….....
TELEPHONE.....	.....…….....

SAMPLE

BOND # _____

CONTRACT PAYMENT BOND
(Surety Company Form)

KNOW ALL MEN BY THESE PRESENTS: That _____ _____ **and the State of** _____, as principal, and.....….....
a corporation duly organized under the laws of the State of ..... and having a usual place of business in .....……., as Surety, are held and firmly bound unto the Treasurer of the State of Maine for the use and benefit of claimants as herein below defined, in the sum of _____ **and 00/100 Dollars ($)** for the payment whereof Principal and Surety bind themselves, their heirs, executors and administrators, successors and assigns, jointly and severally by these presents.

The condition of this obligation is such that if the Principal designated as Contractor in the Contract to construct Project Number _____ in the Municipality of _____ promptly satisfies all claims and demands incurred for all labor and material, used or required by him in connection with the work contemplated by said Contract, and fully reimburses the obligee for all outlay and expense which the obligee may incur in making good any default of said Principal, then this obligation shall be null and void; otherwise it shall remain in full force and effect.

A claimant is defined as one having a direct contract with the Principal or with a Subcontractor of the Principal for labor, material or both, used or reasonably required for use in the performance of the contract.

Signed and sealed this ..... day of ...……....., 20 ... .

WITNESS:	SIGNATURES:
	CONTRACTOR:
Signature…….....	.....….....
Print Name Legibly .....…….	Print Name Legibly …....
	SURETY:
Signature.....	...….....
Print Name Legibly	Print Name Legibly …....
SURETY ADDRESS:	NAME OF LOCAL AGENCY:
...….....	ADDRESS ….....
.....	……....
TELEPHONE	…….....

SAMPLE

State of Maine
Department of Labor
Bureau of Labor Standards
Technical Services Division
Augusta, Maine 04333-0045
Telephone (207) 623-7906

Wage Determination - In accordance with 26 MRSA §1301 et. seq., this is a determination by the Bureau of Labor Standards, of the fair minimum wage rate to be paid laborers and workers employed on the below titled project.

Title of Project -------- Highway Program, Strut Replacement, PIN 15968.00

Location of Project -- Weston, Maine in Aroostook County

2009 Fair Minimum Wage Rates
Highway & Earthwork Aroostook County

Occupation Title	Minimum Wage	Minimum Benefit	Total	Occupation Title	Minimum Wage	Minimum Benefit	Total
Asphalt Raker	$13.35	$2.26	$15.61	Hot Top Plant Operator	$18.22	$8.50	$26.72
Backhoe Loader Operator	$14.00	$3.69	$17.69	Ironworker - Structural	$17.00	$3.97	$20.97
Blaster	$16.00	$4.22	$20.22	Laborers/Helper/Tender	$11.32	$4.12	$15.44
Bulldozer Operator	$16.50	$2.88	$19.38	Laborer - Skilled	$12.25	$1.97	$14.22
Cable Splicer	$21.27	$7.44	$28.71	Line Erector - Power	$19.00	$2.93	$21.93
Carpenter	$18.00	$2.15	$20.15	Loader Op, Front-End	$15.53	$3.23	$18.76
Carpenter - Rough	$16.00	$2.36	$18.36	Mechanic - Maintenance	$17.00	$3.85	$20.85
Cement Mason/Finisher	$13.60	$0.93	$14.53	Painter	$14.00	$0.54	$14.54
Concrete Mixing Plant Op	$16.33	$5.18	$21.51	Paver, Bituminous	$16.63	$0.91	$17.54
Concrete Pump Operator	$19.63	$3.25	$22.88	Pipelayer	$16.00	$3.08	$19.08
Crane Op =>15 Tons	$20.38	$4.94	$25.32	Pump Installer	$19.50	$4.02	$23.52
Crusher Plant Operator	$15.00	$2.60	$17.60	Roller Operator, Earth	$14.83	$5.54	$20.37
Driller, Rock	$15.50	$4.67	$20.17	Roller Op, Pavement	$17.50	$6.60	$24.10
Electrician, Licensed	$21.00	$4.61	$25.61	Screed Operator	$17.58	$4.47	$22.05
Electrician Hlpr (Licensed)	$15.00	$2.64	$17.64	Sheet Metal Worker	$16.75	$7.21	$23.96
Excavator Operator	$15.73	$2.07	$17.80	Stone Mason	$18.95	$1.34	$20.29
Fence Setter	$12.00	$0.95	$12.95	Truck Driver, Light	$15.75	$2.13	$17.88
Flagger	$14.00	$2.42	$16.42	Truck Driver, Medium	$13.00	$5.48	$18.48
Glazier	$15.00	$3.82	$18.82	Truck Driver, Heavy	$13.00	$2.01	$15.01
Grader/Scraper Operator	$16.50	$2.87	$19.37	Truck Driver, Tractor Trlr	$13.15	$3.12	$16.27
Hgway Wrkr/Guardrail Inst	$12.75	$1.54	$14.29	Truck Driver, Mixer, Cemnt	$12.45	$0.25	$12.70

The Laborer classifications include a wide range of work duties. Therefore, if any specific occupation to be employed on this project is not listed in this determination, call the Bureau of Labor Standards at the above number for further clarification.

Welders are classified in the trade to which the welding is incidental.

Apprentices - The minimum wage rate for registered apprentices are those set forth in the standards and policies of the Maine State Apprenticeship and Training Council for approved apprenticeship programs.

Posting of Schedule - Posting of this schedule is required in accordance with 26 MRSA §1301 et. seq., by any contractor holding a State contract for construction valued at $50,000 or more and any subcontractors to such a contractor.

Appeal - Any person affected by the determination of these rates may appeal to the Commissioner of Labor by filing a written notice with the Commissioner stating the specific grounds of the objection within ten (10) days from the filing of these rates with the Secretary of State.

Determination No: HI-049-2009

Filing Date: May 22, 2009

Expiration Date: 12-31-2009

A true copy

Attest: _____
William A. Peabody
Director
Bureau of Labor Standards

BLS 424HI (R2009) (Highway & Earthwork Aroostook)

March 14, 2007
Supersedes March 3, 1966

Non-federal Projects Only

NOTICE TO CONTRACTORS - PREFERRED EMPLOYEES

Sec. 1303. Public Works; minimum wage

In the employment of laborers in the construction of public works, including state highways, by the State or by persons contracting for the construction, preference must first be given to citizens of the State who are qualified to perform the work to which the employment relates and, if they can not be obtained in sufficient numbers, then to citizens of the United States. Every contract for public works construction must contain a provision for employing citizens of this State or the United States. The hourly wage and benefit rate paid to laborers employed in the construction of public works, including state highways, may not be less than the fair minimum rate as determined in accordance with section 1308. Any contractor who knowingly and willfully violates this section is subject to a fine of not less than $250 per employee violation. Each day that any contractor employs a laborer at less than the wage and benefit minimum stipulated in this section constitutes a separate violation of this section. [1997, c. 757, §1 (amd).]

GENERAL NOTES

- All joints between existing and proposed hot mix bituminous pavement shall be butted. Payment shall be made under Item 202.203 Pavement Butt Joint.

- All inslope and ditches in cut areas shall be regraded to 3:1, or flatter, as directed by the Resident.

- Any damage to the slopes caused by the Contractor's equipment, personnel, or operation shall be repaired to the satisfaction of the Resident. All work, equipment and materials required to make repairs shall be at the Contractor's expense.

- A one meter [3 ft] paved lip shall be placed at all gravel entrances, except woods and field entrances, unless otherwise directed by the Resident.

- Item # 411.10, Untreated Aggregate Surface Course, may also meet the gradation requirements of item # 204.20, Add Shoulder Aggregate.

- Any necessary cleaning of existing pavement prior to paving shall be incidental to the related paving items.

- When superelevation exceeds the slope of the low side shoulder, the shoulder will have same slope as traveled way.

- No existing drainage shall be abandoned, removed or plugged without prior approval of the Resident.

- The following shall be incidental to the 603 item(s):

  Any cutting of existing culverts and or connectors necessary to install new culvert replacements or extensions
  All pipe excavation including any cutting and removal of pavement
  All box excavation including wing walls
  All ditching at pipe ends
  Furnishing, placing, grading, and compacting of any new gravel and/or fill material including Granular Borrow used under pipes and for temporary detours to maintain traffic during pipe installation (excavation is also incidental).
  Granular Borrow under the pipe shall meet the requirements for Underwater Backfill
  All work necessary to connect to existing pipes
  Flow lines may be changed by 0.5M [1.5 ft]
  Any necessary clearing of brush and small trees at culvert ends

GENERAL NOTES

- Trim all tree branches to 6 m [20 ft] above pavement. Payment shall be made under the appropriate labor and equipment rental items.

- "Undetermined Locations" shall be determined by the Resident.

- Stations referenced are approximate.

- All waste material not used on the project shall be disposed of off the project in waste areas approved by the Resident.

- Dredge Material (See MDOT Standard Specifications § 101.2) is regulated as a Special Waste. Fifty cubic yards or less of Dredge Material **Beneficially Used in the area adjacent to and draining into the dredged water body** is exempt from Beneficial Use Permits. The Contractor shall ensure that Dredge Material is placed into the fill areas specified by MDOT. No more than the fifty cubic yards (38 cubic meters) of Dredge Material may be excavated without authorization from the Resident. Any Dredge Material not Beneficial Used (excess Dredge Material) shall be dispose of at a landfill licensed by the Maine Department of Environmental Protection to accept Special Waste. The Contractor shall be responsible for making all necessary arrangements for dewatering and proper disposal of the Dredge Material, including any additional laboratory testing, in accordance with the landfill's license. The Contractor shall provide documentation to the Resident that any such Dredge Material was disposed of as specified.

- All work shall be done in accordance with the Maine Department of Transportation's Best Management Practices for Erosion Control & Sedimentation Control, February, 2008.

- MDOT will final stripe the project. The Contractor is responsible for transferring the existing striping pattern to the surface course.

Town: **Weston, Bancroft Rd.**
Project: **15968.00**
Date: **June 23, 2008**

SPECIAL PROVISIONS
SECTION 104
Utilities

MEETING

A Preconstruction Utility Conference, as defined in Subsection 104.4.6 of the Standard Specifications **is** required.

GENERAL INFORMATION

These Special Provisions outline the arrangements that have been made by the Department for utility and/or railroad work to be undertaken in conjunction with this project. The following list identifies all known utilities or railroads having facilities presently located within the limits of this project or intending to install facilities during project construction.

Overview:

Utility/Railroad	Aerial	Underground
Eastern Maine Electric	X	
Fairpoint	X	

If temporary utility adjustments becomes necessary sufficient time will need to be allowed as stated below prior to the construction for all required temporary relocations.

Any times and dates mentioned are estimates only and are dependent upon favorable weather, working conditions, and freedom from emergencies. The Contractor shall have no claim against the Department if they are exceeded.

Utility working days are Monday through Friday, conditions permitting. Any estimated times are estimated on the basis of a single crew for each utility.

The Contractor shall not excavate around any pole or guy anchor to a depth that compromises the stability of the pole.

Fire hydrants shall not be disturbed until all necessary work has been accomplished to provide proper fire protection.

AERIAL

Temporary aerial adjustments may be anticipated as part of this project. All above ground utility locations (poles, guys, etc.) will be reviewed for compliance with the Department's Utility Accommodation Policy following the completion of the paving operation. Any above ground

utility locations not meeting the Department's Utility Accommodation Policy will require relocation to the proper offset.

If temporary pole location are anticipated, **Eastern Maine Electric** will need **Five(5) Days** notice and **Eight (8 Days** to relocate Poles if needed, prior to setting of Concrete Pipes. The contact for **Eastern Maine Electric** is **Larry Thomas** at **(207)454-7555 Ext. 118**

If temporary aerial adjustments are anticipated, **Fairpoint** may opt to using a field crew to hold wire temporarily as Concrete Pipe is set in place. **Five(5) Days** notice will be required to have Fairpoint field crew on site. The contact for **Fairpoint** is **Glenn Matchett** at **(207)764-7416**

SUBSURFACE

No subsurface Utilities on project.

UTILITY SIGNING

Any utility working within the construction limits of this project shall ensure that the traveling public is adequately protected at all times. All work areas shall be signed, lighted, and traffic flaggers employed as determined by field conditions. All traffic controls shall be in accordance with the latest edition of the Manual on Uniform Traffic Control Devices for Streets and Highways, as issued by the Federal Highway Administration.

SAFE PRACTICES AROUND UTILITY FACILITIES

The Contractor shall be responsible for complying with M.R.S.A. Title35-A, Chapter 7-A Sections 751 -761 Overhead High-Voltage Line Safety Act. Prior to commencing any work that may come within ten (10) feet of any aerial electrical line; the Contractor shall notify the aerial utilities as per section 757 of the above act.

DIG SAFE

The Contractor shall be responsible for determining the presence of underground utility facilities prior to commencing any excavation work and shall notify utilities of proposed excavation in accordance with M.R.S.A. Title 23 §3360-A, Maine “Dig Safe” System.

MAINTAINING UTILITY LOCATION MARKINGS

The Contractor will be responsible for maintaining the buried utility location markings following the initial locating by the appropriate utility or their designated representative.

THE CONTRACTOR SHALL PLAN AND CONDUCT HIS WORK ACCORDINGLY.

SPECIAL PROVISION
SECTION 105
General Scope of Work
(Limitations of Operations)

1. Contractor will be allowed to commence work and end work daily according to the Department of Marine Resources Sunrise/Sunset Table at the following Web address: http://www.maine.gov/dmr/sunrise_table.htm, Contractor will be allowed to enter roadway at Sunrise and must be off roadway at Sunset provided it dose not violate any other time restrictions.

Weston
15986.00
Bancroft Rd

Special Provision
Section 105
General Scope of Work
(Limitations of Operations)

1) **Unless otherwise authorized, this contract allows for only one paving operation per day including (excluding hand work paving).**

2) **A 24 hour notice is required for any changes in work schedule.**

3) **A 48 hour notice is required prior to paving or milling operations.**

4) **The Contractor will cease all operations on September 4th, 2009 by 3:00 pm and will not be allowed to commence work until September 8th, 2009 at 6:00 am.**

5) **The Contractor will cease all operations on May 28th, 2010 by 5:00 pm and will not be allowed to commence work until June 1st, 2010 at 6:00 am.**

6) **The Contractor will cease all operations on July 2nd, 2010 by 5:00 pm and will not be allowed to commence work until July 6th , 2010 at 6:00 am.**

Town: Weston
PIN #: 15968.00
Date: 7/22/09

SPECIAL PROVISION
SECTION 105
General Scope of Work
(Environmental Requirements)

In-Water work consists of any activity conducted below the normal high water mark of a river, steam, brook, lake, pond or "Coastal Wetland" areas that are subject to tidal action during the highest tide level for the year which an activity is proposed as identified in the tide tables published by the National Ocean Service. http://www.oceanservice.noaa.gov/ For the full definition of "Coastal Wetlands", please refer to 38 MRSA 480-B(2)

I. In-Water Work shall not be allowed between the dates of 10/1 and 7/14.
(In-Water work is allowed from 7/15 to 9/30.)

II. In-Water work window applies to the following water bodies at the following station #'s:
1. Trout Brook

III. Special Conditions:
1. **The contractor shall notify the Resident at least one week prior to dewatering of any cofferdams so that qualified MaineDOT Environmental Staff can be on-site to monitor the drawdown and relocate any Atlantic salmon downstream of the project area. The contractor shall not begin dewatering activities until MaineDOT Environmental Staff are onsite.**
2. **All conditions of the Army Corps and MDEP permits must be followed.**

IV. Approvals:
1. Temporary Soil Erosion and Water Pollution Control Plan

V. All activities are prohibited (including placement and removal of cofferdams unless otherwise permitted by Regulatory Agencies) below the normal high water mark if outside the prescribed in-water work window, except for the following:

1. Work within a cofferdam constructed according to MaineDOT's Standard Specifications and in adherence with the contractors approved "Soil Erosion and Water Pollution Control Plan".

VI. No work is allowed that completely blocks a river, stream, or brook without providing downstream flow.

NOTE: Regulatory Review and Approval is required to modify the existing In-Water work window.

SPECIAL PROVISION 105
CONSTRUCTION AREA

A Construction Area located in the **Town of Weston** has been established by the Maine Department of Transportation (MDOT) in accordance with provisions of 29-A § 2382 Maine Revised Statutes Annotated (MRSA).

(a) The section of highway under construction is at Trout Brook on the Bancroft Road (C5601) at RLM 12.82.

Per 29-A § 2382 (7) MRSA, the MDOT may "*issue permits for stated periods of time for loads and equipment employed on public way construction projects, United States Government projects or construction of private ways, when within construction areas established by the Department of Transportation. The permit:*

A. Must be procured from the municipal officers for a construction area within that municipality;

B. May require the contractor to be responsible for damage to ways used in the construction areas and may provide for:

(1) Withholding by the agency contracting the work of final payment under contract; or

(2) The furnishing of a bond by the contractor to guarantee suitable repair or payment of damages.

The suitability of repairs or the amount of damage is to be determined by the Department of Transportation on state-maintained ways and bridges, otherwise by the municipal officers;

C. May be granted by the Department of Transportation or by the state engineer in charge of the construction contract; and

D. For construction areas, carries no fee and does not come within the scope of this section."

The Municipal Officers for the **Town of Weston** agreed that an Overlimit Permit will be issued to the Contractor for the purpose of using loads and equipment on municipal ways in excess of the limits as specified in 29-A MRSA, on the municipal ways as described in the "Construction Area".

As noted above, a bond may be required by the municipality, the exact amount of said bond to be determined prior to use of any municipal way. The MDOT will assist in determining the bond amount if requested by the municipality.

The maximum speed limits for trucks on any town way will be 25 mph (40 km per hour) unless a higher legal limit is specifically agreed upon in writing by the Municipal Officers concerned.

Weston Pin: 15968.00

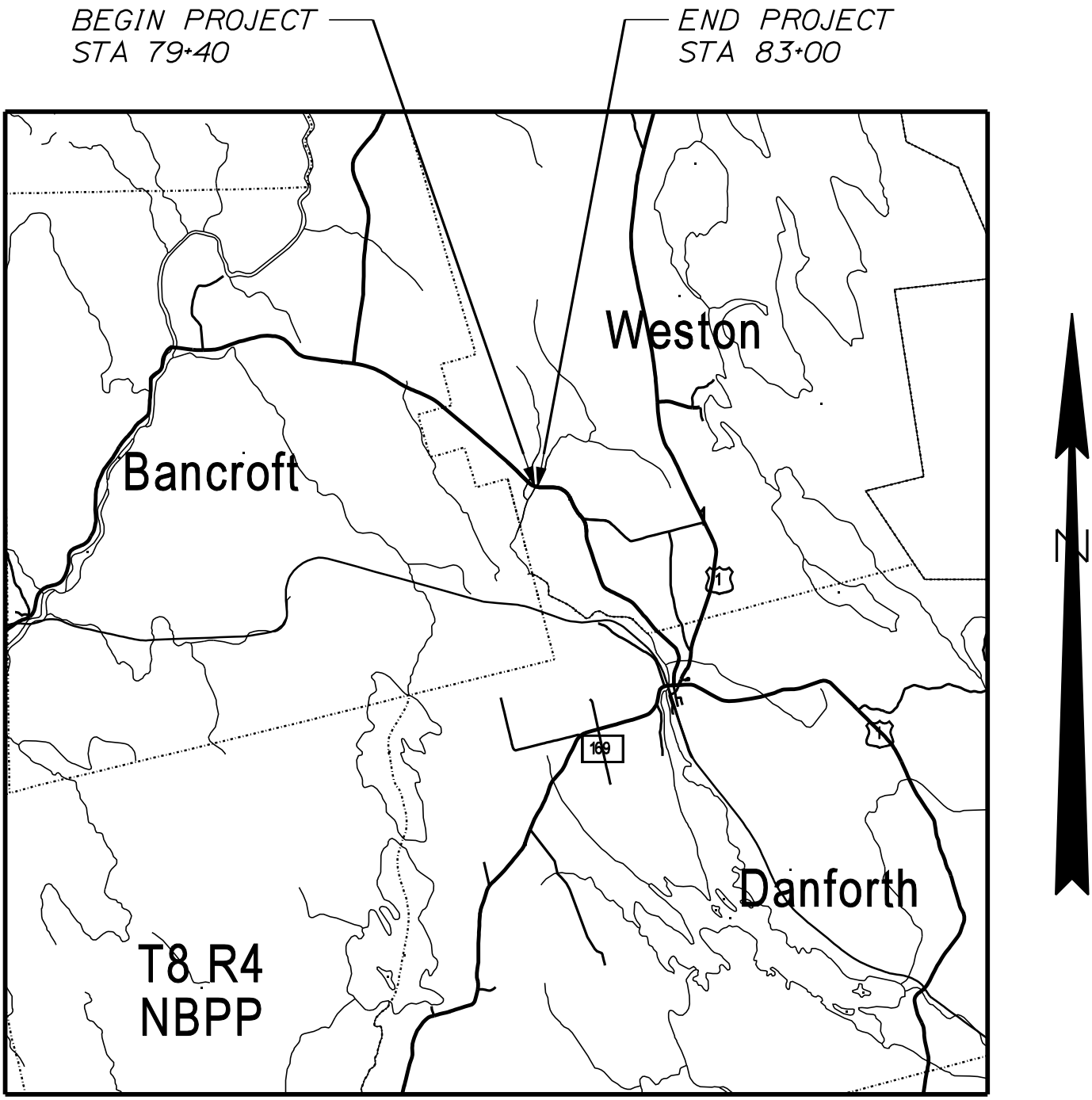

LOCATION MAP

2 0 2 4

Scale in Miles

SPECIAL PROVISION 105
OVERLIMIT PERMITS

Title 29-A § 2382 MRSA Overlimit Movement Permits.

1. Overlimit movement permits issued by State. The Secretary of State, acting under guidelines and advice of the Commissioner of Transportation, may grant permits to move nondivisible objects having a length, width, height or weight greater than specified in this Title over a way or bridge maintained by the Department of Transportation

2. Permit fee. The Secretary of State, with the advice of the Commissioner of Transportation, may set the fee for single trip permits, at not less than $6, nor more than $30, based on weight, height, length and width. The Secretary of State may, by rule, implement fees that have been set by the Commissioner of Transportation for multiple trip, long-term overweight movement permits. Rules established pursuant to this section are routine technical rules pursuant to Title 5, chapter 375, subchapter II-A.

3. County and municipal permits. A county commissioner or municipal officer may grant a permit, for a reasonable fee, for travel over a way or bridge maintained by that county or municipality

4. Permits for weight. A vehicle granted a permit for excess weight must first be registered for the maximum gross vehicle weight allowed for that vehicle.

5. Special mobile equipment. The Secretary of State may grant a permit, for no more than one year, to move pneumatic-tire equipment under its own power, including Class A and Class B special mobile equipment, over ways and bridges maintained by the Department of Transportation. The fee for that permit is $15 for each 30-day period.

6. Scope of permit. A permit is limited to the particular vehicle or object to be moved, the trailer or semitrailer hauling the overlimit object and particular ways and bridges.

7. Construction permits. A permit for a stated period of time may be issued for loads and equipment employed on public way construction projects, United States Government projects or construction of private ways, when within construction areas established by the Department of Transportation. The permit:

A. Must be procured from the municipal officers for a construction area within that municipality;

B. May require the contractor to be responsible for damage to ways used in the construction areas and may provide for:

(1) Withholding by the agency contracting the work of final payment under contract; or

(2) The furnishing of a bond by the contractor to guarantee suitable repair or payment of damages.

The suitability of repairs or the amount of damage is to be determined by the Department of Transportation on state-maintained ways and bridges, otherwise by the municipal officers;

C. May be granted by the Department of Transportation or by the state engineer in charge of the construction contract; and

D. For construction areas, carries no fee and does not come within the scope of this section.

8. Gross vehicle weight permits. The following may grant permits to operate a vehicle having a gross vehicle weight exceeding the prescribed limit:

A. The Secretary of State, with the consent of the Department of Transportation, for state and state aid highways and bridges within city or compact village limits;

B. Municipal officers, for all other ways and bridges within that city and compact village limits; and

C. The county commissioners, for county roads and bridges located in unorganized territory.

9. Pilot vehicles. The following restrictions apply to pilot vehicles.

A. Pilot vehicles required by a permit must be equipped with warning lights and signs as required by the Secretary of State with the advice of the Department of Transportation.

B. Warning lights may be operated and lettering on the signs may be visible on a pilot vehicle only while it is escorting a vehicle with a permit on a public way.

With the advice of the Commissioner of Transportation and the Chief of the State Police, the Secretary of State shall establish rules for the operation of pilot vehicles.

9-A. Police escort. A person may not operate a single vehicle or a combination of vehicles of 125 feet or more in length or 16 feet or more in width on a public way unless the vehicle or combination of vehicles is accompanied by a police escort. The Secretary of State, with the advice of the Commissioner of Transportation, may require a police escort for vehicles of lesser dimensions.

A. The Bureau of State Police shall establish a fee for state police escorts to defray the costs of providing a police escort. A county sheriff or municipal police department may establish a fee to defray the costs of providing police escorts.

B. The Bureau of State Police shall provide a police escort if a request is made by a permittee. A county sheriff or municipal police department may refuse a permittee's request for a police escort.

C. A vehicle or combination of vehicles for which a police escort is required must be accompanied by a state police escort when operating on the interstate highway system.

10. Taxes paid. A permit for a mobile home may not be granted unless the applicant provides reasonable assurance that all property taxes, sewage disposal charges and drain and sewer assessments applicable to the mobile home, including those for the current tax year, have been paid or that the mobile home is exempt from those taxes. A municipality may waive the requirement that those taxes be paid before the issuance of a permit if the mobile home is to be moved from one location in the municipality to another location in the same municipality for purposes not related to the sale of the mobile home.

11. Violation. A person who moves an object over the public way in violation of this section commits a traffic infraction.

Section History:
PL 1993, Ch. 683, §A2 (NEW).
PL 1993, Ch. 683, §B5 (AFF).
PL 1997, Ch. 144, §1,2 (AMD).
PL 1999, Ch. 117, §2 (AMD).
PL 1999, Ch. 125, §1 (AMD).
PL 1999, Ch. 580, §13 (AMD).
PL 2001, Ch. 671, §30 (AMD).
PL 2003, Ch. 166, §13 (AMD).
PL 2003, Ch. 452, §Q73,74 (AMD).
PL 2003, Ch. 452, §X2 (AFF).

SPECIAL PROVISION
SECTION 107
TIME
(Scheduling of Work – Projected Payment Schedule)

Description The Contractor shall also provide the Department with a Quarterly Projected Payment Schedule that estimates the value of the Work as scheduled, including requests for payment of Delivered Materials. The Projected Payment Schedule must be in accordance with the Contractor's Schedule of Work and prices submitted by the Contractor's Bid. The Contractor shall submit the Projected Payment Schedule as a condition of Award.

SPECIAL PROVISION
SECTION 107
SCHEDULING OF WORK

Replace Section 107.4.2 with the following:

"107.4.2 Schedule of Work Required Within 21 Days of Contract Execution and before beginning any on-site activities, the Contractor shall provide the Department with its Schedule of Work. The Contractor shall plan the Work, including the activity of Subcontractors, vendors, and suppliers, such that all Work will be performed in Substantial Conformity with its Schedule of Work. The Schedule must include sufficient time for the Department to perform its functions as indicated in this Contract, including QA inspection and testing, approval of the Contractor's TCP, SEWPCP and QCP, and review of Working Drawings.

At a minimum, the Schedule of Work shall include a bar chart which shows the major Work activities, milestones, durations, and a timeline. Milestones to be included in the schedule include: (A) start of Work, (B) beginning and ending of planned Work suspensions, (C) Completion of Physical Work, and (D) Completion. If the Contractor Plans to Complete the Work before the specified Completion date, the Schedule shall so indicate.

Any restrictions that affect the Schedule of Work such as paving restrictions or In-Stream Work windows must be charted with the related activities to demonstrate that the Schedule of Work complies with the Contract.

The Department will review the Schedule of Work and provide comments to the Contractor within 20 days of receipt of the schedule. The Contractor will make the requested changes to the schedule and issue the finalized version to the Department."

Special Provision
Section 107
Prosecution and Progress
(Contract Time)

1) **The Contractor will be allowed to commence work at anytime on or after August 17, 2009 as long as all applicable plans required under this contract have been submitted and approved.**

2) **The completion date for this project is August 28, 2010.**

3) **For every weekday not worked once operations commence, the contractor will be charged supplemental liquidated damages per standard specification 107.7.2 (excluding days lost to inclement weather).**

WESTON 15968.00
TROUT BROOK STRUT REPLACEMENT
BANCROFT ROAD, WESTON
MAY 26, 2009

SPECIAL PROVISION
SECTION 203
EXCAVATION AND EMBANKMENT
(Dredge Materials)

Description: Dredge Material (See MaineDOT Standard Specifications § 101.2) is regulated as a Special Waste.

Work associated with the Trout Brook Strut Replacement will require the excavation of select Dredge Material. It is anticipated that less than 100-cubic yards of Dredge Material will be excavated. There is onsite Beneficial Use for all of the Dredge Materials.

It is acknowledged that the excavation of Dredge for this work may include some boulders. The Maine Department of Environmental Protection has determined that sound boulders (rock 12-inches or more in diameter), that are free of adhering sediment or other contaminants, shall be deemed to be Inert Fill material and shall not be included in the Dredge Material Quantities.

The contractor shall Beneficially Use all Dredge Material excavated from the Trout Brook Strut Replacement initiative in an area adjacent to and draining into the dredged water body. No more than 100-cubic yards of Dredge Material may be excavated.

CONSTRUCTION REQUIREMENTS

Management: The contractor shall Beneficially Use all Dredge Material excavated at the Trout Brook Strut Replacement project in areas adjacent to and draining into the dredged water body. No more than 100-cubic yards of Dredge Material may be excavated at the Trout Brook Strut Replacement project.

Method of Measurement: Dredge Material will be measured by the cubic yard of material removed.

Basis of Payment: Payment for the Beneficial Use of Dredge Material will be incidental to the Contract Pay Items.

Payment shall be full compensation for excavation, dewatering, managing, transporting, and placement of the Dredge Materials.

SPECIAL PROVISION
DIVISION 400
PAVEMENTS

SECTION 401 - HOT MIX ASPHALT PAVEMENT

401.01 Description The Contractor shall furnish and place one or more courses of Hot Mix Asphalt Pavement (HMA) on an approved base in accordance with the contract documents and in reasonably close conformity with the lines, grades, thickness, and typical cross sections shown on the plans or established by the Resident. The Department will accept this work under Quality Assurance provisions, in accordance with these specifications and the requirements of Section 106 – Quality, the provisions of AASHTO M 323 except where otherwise noted in sections 401 and 703 of these specifications, and the Maine DOT Policies and Procedures for HMA Sampling and Testing.

401.02 Materials Materials shall meet the requirements specified in Section 700 - Materials:

Asphalt Cement	702.01
Aggregates for HMA Pavement	703.07
HMA Mixture Composition	703.09

401.021 Recycled Asphalt Materials Recycled Asphalt Pavement (RAP) may be introduced into the mixture at percentages approved by the Department. If approved by the Department, the Contractor shall provide documentation stating the source, test results for average residual asphalt content, and stockpile gradations showing RAP materials have been sized to meet the maximum aggregate size requirements of each mix designation. The Department will obtain samples for verification and approval prior to its use.

In the event that RAP source or properties change, the Contractor shall notify the Department of the change and submit new documentation stating the new source or properties a minimum of 72 hours prior to the change to allow for obtaining new samples and approval.

401.03 Composition of Mixtures The Contractor shall compose the Hot Mix Asphalt Pavement with aggregate, Performance Graded Asphalt Binder (PGAB), and mineral filler if required. HMA shall be designed and tested according to AASHTO R35 and the volumetric criteria in Table 1. The Contractor shall size, uniformly grade, and combine the aggregate fractions in proportions that provide a mixture meeting the grading requirements of the Job Mix Formula (JMF). The Contractor may use a maximum of 15% reclaimed asphalt pavement (RAP) in any base, binder, surface, or shim course. The Contractor may be allowed to use more than 15% RAP, up to a maximum of 25% RAP, in a base, binder, or shim course provided that PG 58-34 asphalt binder is used in the mixture.

The Contractor shall submit for Department approval a JMF to the Central Laboratory in Bangor for each mixture to be supplied. The Department may approve 1 active design per nominal maximum size, per traffic level, per plant, plus a 9.5mm “fine” mix for shimming and where required, a non-RAP design for bridge decks. The Department shall then have 15 calendar days in which to process a new design before approval. The JMF shall establish a single percentage of aggregate passing each sieve size within the limits shown in section 703.09. The mixture shall be designed and produced, including all production tolerances, to comply with the allowable control points for the particular type of mixture as outlined in 703.09. The JMF shall state the original source, gradation, and percentage to be used of each portion of the aggregate including RAP when utilized, and mineral filler if required. It shall also state the proposed PGAB content, the name and location of the refiner, the supplier, the source of PGAB submitted for approval, the type of PGAB modification if applicable, and the location of the terminal if applicable.

In addition, the Contractor shall provide the following information with the proposed JMF:

Properly completed JMF indicating all mix properties (Gmm, VMA, VFB, etc.)
Stockpile Gradation Summary
Design Aggregate Structure Consensus Property Summary
Design Aggregate Structure Trial Blend Gradation Plots (0.45 power chart)
Trial Blend Test Results for at least three different asphalt contents
Design Aggregate Structure for at least three trial blends
Test results for the selected aggregate blend at a minimum of three binder contents
Specific Gravity and temperature/viscosity charts for the PGAB to be used
Recommended mixing and compaction temperatures from the PGAB supplier
Material Safety Data Sheets (MSDS) For PGAB
Asphalt Content vs. Air Voids trial blend curve
Test report for Contractor's Verification sample
Test reports for PG binder content and gradation of RAP when used in the JMF

At the time of JMF submittal, the Contractor shall identify and make available the stockpiles of all proposed aggregates at the plant site. There must be a minimum of 135 Mg [150 ton] for stone stockpiles, 70 Mg [75 ton] for sand stockpiles, and 45 Mg [50 ton] of blend sand before the Department will sample. The Department shall obtain samples for laboratory testing. The Contractor shall also make available to the Department the PGAB proposed for use in the mix in sufficient quantity to test the properties of the asphalt and to produce samples for testing of the mixture. Before the start of paving, the Contractor and the Department shall split a production sample for evaluation. The Contractor shall test its split of the sample and determine if the results meet the requirements of the Department's written policy for mix design verification (See Maine DOT Policies and Procedures for HMA Sampling and Testing available at the Central Laboratory in Bangor). If the results are found to be acceptable, the Contractor will forward their results to the Department's Lab, which will test the Department's split of the sample. The results of the two split samples will be compared and shared between the Department and the Contractor. If the Department finds the mixture acceptable, an approved JMF will be forwarded to the Contractor and paving may commence. The first day's production shall be monitored, and the approval may be withdrawn if the mixture exhibits undesirable characteristics such as checking, shoving or displacement. The Contractor shall be allowed to submit aim changes within 24 hours of receipt of the first Acceptance test result. Adjustments will be allowed of up to 2% on the percent passing the 2.36 mm sieve through the 0.075 mm and 3% on the percent passing the 4.75 mm or larger sieves. Adjustments will be allowed on the %PGAB of up to 0.2%. Adjustments will be allowed on GMM of up to 0.010.

The Contractor shall submit a new JMF for approval each time a change in material source or materials properties is proposed. The same approval process shall be followed. The cold feed percentage of any aggregate may be adjusted up to 10 percentage points from the amount listed on the JMF, however no aggregate listed on the JMF shall be eliminated. The cold feed percentage for RAP may be adjusted up to 5 percentage points from the amount listed on the JMF but shall not exceed the maximum allowable percentage for RAP for the specific application.

TABLE 1: VOLUMETRIC DESIGN CRITERIA

Design ESAL's (Millions)	Required Density (Percent of G_{mm})			Voids in the Mineral Aggregate (VMA)(Minimum Percent)					Voids Filled with Binder (VFB) (Minimum %)	Fines/Eff. Binder Ratio
				Nominal Maximum Aggregate Size (mm)						
	$N_{initial}$	N_{design}	N_{max}	25	19	12.5	9.5	4.75		
<0.3	≤91.5	96.0	≤98.0	13.0	14.0	15.0	16.0	16.0	70-80	0.6-1.2
0.3 to <3	≤90.5								65-80	
3 to <10	≤89.0								65-80*	
10 to <30										
≥ 30										

40

*For 9.5 mm nominal maximum aggregate size mixtures, the maximum VFB is 82.
*For 4.75 mm nominal maximum aggregate size mixtures, the maximum VFB is 84.

401.04 Temperature Requirements After the JMF is established, the temperatures of the mixture shall conform to the following tolerances:

In the truck at the mixing plant – allowable range 135° to 163°C [275 to 325°F]
At the Paver – allowable range 135° to 163°C [275 to 325°F]

The JMF and the mix subsequently produced shall meet the requirements of Tables 1 and Section 703.07.

401.05 Performance Graded Asphalt Binder Unless otherwise noted in Special Provision 403 - Hot Mix Asphalt Pavement, the PGAB shall be 64-28, except that for mixtures containing greater than 15% but no more than 25% RAP the PGAB shall be PG 58-34. The PGAB shall meet the applicable requirements of AASHTO M320 - Standard Specification for PGAB. The Contractor shall provide the Department with an approved copy of the Quality Control Plan for PGAB in accordance with AASHTO R 26 Certifying Suppliers of PGAB. The Contractor shall request approval from the Department for a change in PGAB supplier or source by submitting documentation stating the new supplier or source a minimum of 24 hours prior to the change. In the event that the PGAB supplier or source is changed, the Contractor shall make efforts to minimize the occurrence of PGAB co-mingling.

401.06 Weather and Seasonal Limitations The State is divided into two paving zones as follows:

a. Zone 1 Areas north of US Route 2 from Gilead to Bangor and north of Route 9 from Bangor to Calais.
b. Zone 2 Areas south of Zone 1 including the US Route 2 and Route 9 boundaries.

The Contractor may place Hot Mix Asphalt Pavement for use other than a traveled way wearing course in either Zone between the dates of April 15th and November 15th, provided that the air temperature as determined by an approved thermometer (placed in the shade at the paving location) is 4°C [40°F] or higher and the area to be paved is not frozen. The Contractor may place Hot Mix Asphalt Pavement as traveled way wearing course in Zone 1 between the dates of May 1st and the Saturday following October 1st and in Zone 2 between the dates of April 15th and the Saturday following October 15th, provided the air temperature determined as above is 10°C [50°F] or higher. For the purposes of this Section, the traveled way includes truck lanes, ramps, approach roads and auxiliary lanes. The atmospheric temperature for all courses on bridge decks shall be 10°C [50°F] or higher.

Hot Mix Asphalt Pavement used for curb, driveways, sidewalks, islands, or other incidentals is not subject to seasonal limitations, except that conditions shall be satisfactory for proper handling and finishing of the mixture. All mixtures used for curb, driveways, sidewalks, islands, or other incidentals shall conform to section 401.04 - Temperature Requirements. Unless otherwise specified, the Contractor shall not place Hot Mix Asphalt Pavement on a wet or frozen surface and the air temperature shall be 4°C [40°F] or higher.

On all sections of overlay with wearing courses less than 25 mm [1 in] thick, the wearing course for the travelway and adjacent shoulders shall be placed between the dates of May 15th and the Saturday following September 15th.

On all sections of overlay with wearing courses less than 1 inch thick, the wearing course for the travelway and adjacent shoulders shall be placed between the dates of June 1st and the Saturday following September 1st if the work is to be performed, either by contract requirement, or Contractor option, during conditions defined as "night work".

401.07 Hot Mix Asphalt Plant

401.071 General Requirements HMA plants shall conform to AASHTO M156.

a. Truck Scales When the hot mix asphalt is to be weighed on scales meeting the requirements of Section 108 - Payment, the scales shall be inspected and sealed by the State Sealer as often as the Department deems necessary to verify their accuracy.

Plant scales shall be checked prior to the start of the paving season, and each time a plant is moved to a new location. Subsequent checks will be made as determined by the Resident. The Contractor will have at least ten 20 Kg [50 pound] masses for scale testing.

401.072 Automation of Batching Batch plants shall be automated for weighing, recycling, and monitoring the system. In the case of a malfunction of the printing system, the requirements of Section 401.074 c. of this specification will apply.

The batch plant shall accurately proportion the various materials in the proper order by weight. The entire batching and mixing cycle shall be continuous and shall not require any manual operations. The batch plant shall use auxiliary interlock circuits to trigger an audible alarm whenever an error exceeding the acceptable tolerance occurs. Along with the alarm, the printer shall print an asterisk on the delivery slip in the same row containing the out-of-tolerance weight. The automatic proportioning system shall be capable of consistently delivering material within the full range of batch sizes. When RAP is being used, the plant must be capable of automatically compensating for the moisture content of the RAP.

All plants shall be equipped with an approved digital recording device. The delivery slip load ticket shall contain information required under Section 108.1.3 - Provisions Relating to Certain Measurements, Mass and paragraphs a, b, and c of Section 401.073

401.073 Automatic Ticket Printer System on Automatic HMA Plant An approved automatic ticket printer system shall be used with all approved automatic HMA plants. The requirements for delivery slips for payment of materials measured by weight, as given in the following Sections, shall be waived: 108.1.3 a., 108.1.3 b., 108.1.3 c., and 108.1.3 d. The automatic printed ticket will be considered as the Weight Certificate.

The requirements of Section 108.1.3 f. - Delivery Slips, shall be met by the weigh slip or ticket, printed by the automatic system, which accompanies each truckload, except for the following changes:

a. The quantity information required shall be individual weights of each batch or total net weight of each truckload.
b. Signatures (legible initials acceptable) of Weighmaster (required only in the event of a malfunction as described in 401.074 c.).
c. The MDOT designation for the JMF.

401.074 Weight Checks on Automatic HMA Plant At least twice during each 5 days of production either of the following checks will be performed:

a. A loaded truck may be intercepted and weighed on a platform scale that has been sealed by the State Sealer of Weights and Measures within the past 12 months. Whenever the discrepancy in net weights is greater than 1.0%, but does not exceed 1.5%, the plant inspector will notify the producer to take corrective action; payment will still be governed by the printed ticket.

The producer will be allowed a period of two days to make any needed repairs to the plant and/or platform scales so that the discrepancy in net weights between the two is less than 1.0%. If the discrepancy exceeds 1.5%, the plant will be allowed to operate as long as payment is determined by truck platform scale net weight. Effective corrective action shall be taken within two working days.

b. Where platform scales are not readily available, a check will be made to verify the accuracy and sensitivity of each scale within the normal weighing range and to assure that the interlocking devices and automatic printer system are functioning properly.

c. In the event of a malfunction of the automatic printer system, production may be continued without the use of platform truck scales for a period not to exceed the next two working days, providing total weights of each batch are recorded on weight tickets and certified by a Licensed Public Weighmaster.

401.08 Hauling Equipment Trucks for hauling Hot Mix Asphalt Pavement shall have tight, clean, and smooth metal dump bodies, which have been thinly coated with a small amount of approved release agent to prevent the mixture from adhering to the bodies. Solvent based agents developed to strip asphalts from aggregates will not be allowed as release agents.

All truck dump bodies shall have a cover of canvas or other water repellent material capable of heat retention, which completely covers the mixture. The cover shall be securely fastened on the truck, unless unloading.

All truck bodies shall have an opening on both sides, which will accommodate a thermometer stem. The opening shall be located near the midpoint of the body, at least 300 mm [12 in] above the bed.

401.09 Pavers Pavers shall be self-contained, self-propelled units with an activated screed (heated if necessary) capable of placing courses of Hot Mix Asphalt Pavement in full lane widths specified in the contract on the main line, shoulder, or similar construction.

On projects with no price adjustment for smoothness, pavers shall be of sufficient class and size to place Hot Mix Asphalt Pavement over the full width of the mainline travel way with a 3 m [10 ft] minimum main screed with activated extensions.

The Contractor shall place Hot Mix Asphalt Pavement on the main line with a paver using an automatic grade and slope controlled screed, unless otherwise authorized by the Department. The controls shall automatically adjust the screed and increase or decrease the layer thickness to compensate for irregularities in the preceding course. The controls shall maintain the proper transverse slope and be readily adjustable so that transitions and superelevated curves can be properly paved. The controls shall operate from a fixed or moving reference such as a grade wire or ski type device (floating beam) with a minimum length of 10 m [30 ft], a non-contact grade control with a minimum span of 7.3 m [24 ft], except that a 12 m [40 ft] reference shall be used on Expressway projects.

The Contractor shall operate the paver in such a manner as to produce a visually uniform surface texture and a thickness within the requirements of Section 401.101 - Surface Tolerances. The paver shall have a receiving hopper with sufficient capacity for a uniform spreading operation and a distribution system to place the mixture uniformly, without segregation in front of the screed. The screed assembly shall produce a finished surface of the required evenness and texture without tearing, shoving, or gouging the mixture. Pavers with extendible screeds shall have auger extensions and tunnel extenders as per the manufacturer's recommendations, a copy of which shall be available if requested.

The Contractor shall have the paver at the project site sufficiently before the start of paving operations to be inspected and approved by the Department. The Contractor shall repair or replace any paver found worn or defective, either before or during placement, to the satisfaction of the Department. Pavers that produce an unevenly textured or non-uniform mat will be repaired or replaced before continuing to place HMA on MaineDOT projects.
On a daily basis, the Contractor shall perform nuclear density testing across the mat being placed, prior to being compacted by equipment., at 300 mm [12 in] intervals, If the density values vary by more than 2.0% from the mean, the Contractor shall make adjustments to the screed until the inconsistencies are remedied.

Failure to replace or repair defective placement equipment may result in a letter of suspension of work and notification of a quality control violation resulting in possible monetary penalties as governed by Section 106 - Quality

401.10 Rollers Rollers shall be static steel, pneumatic tire, or approved vibrator type. Rollers shall be in good mechanical condition, capable of starting and stopping smoothly, and be free from backlash when reversing direction. Rollers shall be equipped and operated in such a way as to prevent the picking up of hot mixed material by the roller surface. The use of rollers, which result in crushing of the aggregate or in displacement of the HMA will not be permitted. Any Hot Mix Asphalt Pavement that becomes loose, broken, contaminated, shows an excess or deficiency of Performance Graded Asphalt Binder, or is in any other way defective shall be removed and replaced at no additional cost with fresh Hot Mix Asphalt Pavement, which shall be immediately compacted to conform to the adjacent area.

The Contractor shall repair or replace any roller found to be worn or defective, either before or during placement, to the satisfaction of the Department. Rollers that produce grooved, unevenly textured or non-uniform mat will be repaired or replaced before continuing to place HMA on MaineDOT projects.

The type of rollers to be used and their relative position in the compaction sequence shall generally be the Contractor's option, provided specification densities are attained and with the following requirements:

a. On variable-depth courses, the first lift of pavement over gravel, reclaimed pavement, an irregular surface, or on bridges, at least one roller shall be 14.5 Mg [16 ton] pneumatic-tired. Unless otherwise allowed by the Resident, pneumatic-tired rollers shall be equipped with skirting to minimize the pickup of HMA materials from the paved surface. When required by the Resident, the roller shall be ballasted to 18.1 Mg [20 ton].

b. Compaction with a vibratory or steel wheel roller shall precede pneumatic-tired rolling, unless otherwise authorized by the Department.

c. Vibratory rollers shall not be operated in the vibratory mode when checking or cracking of the mat occurs, or on bridge decks.

d. Any method, which results in cracking or checking of the mat, will be discontinued and corrective action taken.

The maximum operating speed for a steel wheel or pneumatic roller shall not exceed the manufacturer's recommendations, a copy of which shall be available if requested.

401.101 Surface Tolerances The Department will check surface tolerance utilizing the following methods :

a.) A 5 m [16 ft] straightedge or string line placed directly on the surface, parallel to the centerline of pavement.
b.) A 3 m [10 ft] straightedge or string line placed directly on the surface, transverse to the centerline of pavement.

The Contractor shall correct variations exceeding 6 mm [¼ in] by removing defective work and replacing it with new material as directed by the Department. The Contractor shall furnish a 10 foot straightedge for the Departments use.

401.11 Preparation of Existing Surface The Contractor shall thoroughly clean the surface upon which Hot Mix Asphalt Pavement is to be placed of all objectionable material. When the surface of the existing base or pavement is irregular, the Contractor shall bring it to uniform grade and cross section. All surfaces shall have a tack coat applied prior to placing any new HMA course. Tack coat shall conform to the requirements of Section 409 – Bituminous Tack Coat, Section 702 – Bituminous Material, and all applicable sections of the contract.

401.12 Hot Mix Asphalt Documentation The Contractor and the Department shall agree on the amount of Hot Mix Asphalt Pavement that has been placed each day.

401.13 Preparation of Aggregates The Contractor shall dry and heat the aggregates for the HMA to the required temperature. The Contractor shall properly adjust flames to avoid physical damage to the aggregate and to avoid depositing soot on the aggregate.

401.14 Mixing The Contractor shall combine the dried aggregate in the mixer in the amount of each fraction of aggregate required to meet the JMF. The Contractor shall measure the amount of PGAB and introduce it into the mixer in the amount specified by the JMF.

The Contractor shall produce the HMA at the temperature established by the JMF.

The Contractor shall dry the aggregate sufficiently so that the HMA will not flush, foam excessively, or displace excessively under the action of the rollers. The Contractor shall introduce the aggregate into the mixer at a temperature of not more than 14°C [25°F] above the temperature at which the viscosity of the PGAB being used is 0.150 Pa•s.

The Contractor shall store and introduce into the mixer the Performance Graded Asphalt Binder at a uniformly maintained temperature at which the viscosity of the PGAB is between 0.150 Pa•s and 0.300 Pa•s. The aggregate shall be coated completely and uniformly with a thorough distribution of the PGAB. The Contractor shall determine the wet mixing time for each plant and for each type of aggregate used.

401.15 Spreading and Finishing On areas where irregularities or unavoidable obstacles make the use of mechanical spreading and finishing equipment impracticable, the Contractor shall spread, rake, and lute the HMA with hand tools to provide the required compacted thickness. Solvent based agents developed to strip asphalts from aggregates will not be allowed as release agents.

On roadways with adjoining lanes carrying traffic, the Contractor shall place each course over the full width of the traveled way section being paved that day, unless otherwise noted by the Department in Section 403 - Hot Bituminous Pavement.

401.16 Compaction Immediately after the Hot Mix Asphalt Pavement has been spread, struck off, and any surface irregularities adjusted, the Contractor shall thoroughly and uniformly compact the HMA by rolling.

The Contractor shall roll the surface when the mixture is in the proper condition and when the rolling does not cause undue displacement, cracking, or shoving. The Contractor shall prevent adhesion of the HMA to the rollers or vibrating compactors without the use of fuel oil or other petroleum based release agents. Solvents designed to strip asphalt binders from aggregates will not be permitted as release agents on equipment, tools, or pavement surfaces.
The Contractor shall immediately correct any displacement occurring as a result of the reversing of the direction of a roller or from other causes to the satisfaction of the Department. Any operation other than placement of variable depth shim course that results in breakdown of the aggregate shall be discontinued. Any new pavement that shows obvious cracking, checking, or displacement shall be removed and replaced for the full lane width as directed by the Resident at no cost to the Department.

Along forms, curbs, headers, walls, and other places not accessible to the rollers, the Contractor shall thoroughly compact the HMA with mechanical vibrating compactors. The Contractor shall only use hand tamping in areas inaccessible to all other compaction equipment. On depressed areas, the Contractor may use a trench roller or cleated compression strips under a roller to transmit compression to the depressed area.

Any HMA that becomes unacceptable due to cooling, cracking, checking, segregation or deformation as a result of an interruption in mix delivery shall be removed and replaced, with material that meets contract specifications at no cost to the Department.

401.17 Joints The Contractor shall construct wearing course transverse joints in such a manner that minimum tolerances shown in Section 401.101 - Surface Tolerances are met when measured with a straightedge.

The paver shall maintain a uniform head of HMA during transverse and longitudinal joint construction.

The HMA shall be free of segregation and meet temperature requirements outlined in section 401.04. Transverse joints of the wearing course shall be straight and neatly trimmed. The Contractor may form a vertical face exposing the full depth of the course by inserting a header, by breaking the bond with the underlying course, or by cutting back with hand tools. The Department may allow feathered or "lap" joints on lower base courses or when matching existing base type pavements.

Longitudinal joints shall be generally straight to the line of travel, and constructed in a manner that best ensure joint integrity. Methods or activities that prove detrimental to the construction of straight, sound longitudinal joints will be discontinued.

The Contractor shall apply a coating of emulsified asphalt immediately before paving all joints to the vertical face and 75 mm [3 in] of the adjacent portion of any pavement being overlaid except those formed by pavers operating in echelon. The Contractor shall use an approved spray apparatus designed for covering a narrow surface. The Department may approve application by a brush for small surfaces, or in the event of a malfunction of the spray apparatus, but for a period of not more than one working day.

Where pavement under this contract joins an existing pavement, or when the Department directs, the Contractor shall cut the existing pavement along a smooth line, producing a neat, even, vertical joint. The Department will not permit broken or raveled edges. The cost of all work necessary for the preparation of joints is incidental to related contract pay items.

401.18 Quality Control Method A, B & C The Contractor shall operate in accordance with the approved Quality Control Plan (QCP) to assure a product meeting the contract requirements. The QCP shall meet the requirements of Section 106.6 - Acceptance and this Section. The Contractor shall not begin paving operations until the Department approves the QCP in writing.

Prior to placing any mix, the Department and the Contractor shall hold a Pre-paving conference to discuss the paving schedule, source of mix, type and amount of equipment to be used, sequence of paving pattern, rate of mix supply, random sampling, project lots and sublots and traffic control. A copy of the QC random numbers to be used on the project shall be provided to The Resident. The Departments' random numbers for Acceptance testing shall be generated and on file with the Resident and the Project Manager. All field and plant supervisors including the responsible onsite paving supervisor shall attend this meeting.

The QCP shall address any items that affect the quality of the Hot Mix Asphalt Pavement including, but not limited to, the following:

a. JMF(s)
b. Hot mix asphalt plant details
c. Stockpile Management (to include provisions for a minimum 2 day stockpile)
d. Make and type of paver(s)
e. Make and type of rollers including weight, weight per inch of steel wheels, and average contact pressure for pneumatic tired rollers
f. Name of QCP Administrator, and certification number
g. Name of Process Control Technician(s) and certification number(s)
h. Name of Quality Control Technicians(s) and certification number(s)
i. Mixing & transportation including process for ensuring that truck bodies are clean and free of debris or contamination that could adversely affect the finished pavement
j. Testing Plan
k. Laydown operations including longitudinal joint construction, procedures for avoiding paving in inclement weather, type of release agent to be used on trucks tools and rollers, compaction of shoulders, tacking of all joints, methods to ensure that segregation is minimized, procedures to determine the maximum rolling and paving speeds based on best engineering practices as well as past experience in achieving the best possible smoothness of the pavement. Solvent based agents developed to strip asphalts from aggregates will not be allowed as release agents.
l. Examples of Quality Control forms including a daily plant report and a daily paving report
m. Silo management and details (can show storage for use on project of up to 36 hours)
n. Provisions for varying mix temperature due to extraordinary conditions
o. Name and responsibilities of the Responsible onsite Paving Supervisor
p. Method for calibration/verification of Density Gauge
q. A note that all testing will be done in accordance with AASHTO and the Maine DOT Policies and Procedures for HMA Sampling and Testing.
r. A note detailing conditions under which the percent of RAP will vary from that specified on the JMF.
s. A detailed procedure outlining when production will be halted due to QC or Acceptance testing results.
t. A plan to address the change in PGAB source or supplier and the potential co-mingling of differing PGAB's.
u. A procedure to take immediate possession of acceptance samples once released by MaineDOT and deliver said samples to the designated acceptance laboratory.

The QCP shall include the following technicians together with following minimum requirements:

a. QCP Administrator - A qualified individual shall administer the QCP. The QCP Administrator must be a full-time employee of or a consultant engaged by the Contractor or paving subcontractor. The QCP Administrator shall have full authority to institute any and all actions necessary for the successful operation of the QCP. The QCP Administrator (or its designee in the QCP Administrator's absence) shall be available to communicate with the Department at all times. The QCP Administrator shall be certified as a Quality Assurance Technologist certified by the New England Transportation Technician Certification Program (NETTCP).

b. Process Control Technician(s) (PCT) shall utilize test results and other quality control practices to assure the quality of aggregates and other mix components and control proportioning to meet the JMF(s). The PCT shall inspect all equipment used in mixing to assure it is operating properly and that mixing conforms to the mix design(s) and other Contract requirements. The QCP shall detail how these duties and responsibilities are to be accomplished and documented, and whether more than one PCT is required. The Plan shall include the criteria to be utilized by the PCT to correct or reject unsatisfactory materials. The PCT shall be certified as a Plant Technician by the NETTCP.

c. Quality Control Technician(s) (QCT) shall perform and utilize quality control tests at the job site to assure that delivered materials meet the requirements of the JMF(s). The QCT shall inspect all equipment utilized in transporting, laydown, and compacting to assure it is operating properly and that all laydown and compaction conform to the Contract requirements. The QCP shall detail how these duties and responsibilities are to be accomplished and documented, and whether more than one QCT is required. The QCP shall include the criteria utilized by the QCT to correct or reject unsatisfactory materials. The QCT shall be certified as a Paving Inspector by the NETTCP.

The QCP shall detail the coordination of the activities of the Plan Administrator, the PCT and the QCT. The Project Superintendent shall be named in the QCP, and the responsibilities for successful implementation of the QCP shall be outlined.

The Contractor shall sample, test, and evaluate Hot Mix Asphalt Pavement in accordance with the following minimum frequencies:

TABLE 2 : MINIMUM QUALITY CONTROL FREQUENCIES

Test or Action	Frequency	Test Method
Temperature of mix	6 per day at street and plant	-
Temperature of mat	4 per day	-
%TMD (Surface)	1 per 125 Mg [125 ton] (As noted in QC Plan)	ASTM D2950
%TMD (Base)	1 per 250 Mg [250 ton] (As noted in QC Plan)	AASHTO T269
Fines / Effective Binder	1 per 500 Mg [500 ton]	AASHTO T 312*
Gradation	1 per 500 Mg [500 ton]	AASHTO T30
PGAB content	1 per 500 Mg [500 ton]	AASHTO T164 or T308
Voids at N_{design}	1 per 500 Mg [500 ton]	AASHTO T 312*
Voids in Mineral Aggregate at N_{design}	1 per 500 Mg [500 ton]	AASHTO T 312*
Rice Specific Gravity	1 per 500 Mg [500 ton]	AASHTO T209
Coarse Aggregate Angularity	1 per 5000 Mg [5000 ton]	ASTM D5821
Flat and Elongated Particles	1 Per 5000 Mg [5000 ton]	ASTM D4791
Fine Aggregate Angularity	1 Per 5000 Mg [5000 ton]	AASHTO T304

. *Method A and B only

The Contractor may utilize innovative equipment or techniques not addressed by the Contract documents to produce or monitor the production of the mix, subject to approval by the Department.

The Contractor shall submit all Hot Mix Asphalt Pavement plant test reports, inspection reports and updated pay factors in writing, signed by the appropriate technician and present them to the Department by 1:00 P.M. on the next working day, except when otherwise noted in the QCP due to local restrictions. The Contractor shall also retain splits of the previous 5 QC tests, with QC results enclosed for random selection and testing by The Department during QA inspections of the HMA production facility. Test results of splits that do not meet the Dispute Resolution Variance Limits in Table 10 shall trigger an investigation by the MDOT Independent Assurance Unit, and may result in that lab losing NETTCP certification and the ability to request a dispute [Section 401.223 - Process for Dispute Resolution (Methods A , B and C only)].

The Contractor shall make density test results, including randomly sampled densities, available to the Department onsite. Summaries of each day's results, including a daily paving report, shall be recorded and signed by the QCT and presented to the Department by 1:00 p.m. the next working day.

The Contractor shall have a testing lab at the plant site, equipped with all testing equipment necessary to complete the tests in Table 2. The Contractor shall locate an approved Gyratory Compactor at the plant testing lab or within 30 minutes of the plant site.

The Contractor shall fill all holes in the pavement resulting from cutting cores by the Contractor or the Department with a properly compacted, acceptable mixture no later than the following working day. Before filling, the Contractor shall carefully clean the holes and apply a coating of emulsified asphalt. On surface courses, cores shall not be cut except for Verification of the Nuclear Density Gauge, at a rate not to exceed 3 per day or 2 per 900 Mg [1000 ton] placed.
The Contractor shall monitor plant production using running average of three control charts as specified in Section 106 - Quality. Control limits shall be as noted in Table 3 below. The UCL and LCL, shall not exceed the allowable control points for the particular type of mixture as outlined in Table 1 of section 703.09

TABLE 3: Control Limits

Property	UCL and LCL
Passing 4.75 mm and larger sieves	Target +/-4.0
Passing 2.36 mm sieve	Target +/-2.5
Passing .075 mm sieve	Target +/-1.2
PGAB Content*	Target +/-0.3
Voids in the Mineral Aggregate	LCL = LSL + 0.2
% Voids at N_{design}	JMF Target +/-1.3

*Based on AASHTO T 308

The Contractor shall cease paving operations whenever one of the following occurs on a lot in progress:

a. Method A: The Pay Factor for VMA, Voids @ N_d, Percent PGAB, composite gradation, VFB, fines to effective binder or density using all Acceptance or all Quality Control tests for the current lot is less than 0.85.
b. Method B:The Pay Factor for VMA, Voids @ N_d, Percent PGAB, composite gradation, VFB, fines to effective binder or density using all Acceptance or all Quality Control tests for the current lot is less than 0.90.

c. Method C: The Pay Factor for VMA, Voids @ N_d, Percent PGAB, percent passing the nominal maximum sieve, percent passing 2.36 mm sieve, percent passing 0.300 mm sieve or percent passing 0.075 mm sieve using all Acceptance or all available Quality Control tests for the current lot is less than 0.85.
d. The Coarse Aggregate Angularity or Fine Aggregate Angularity value falls below the requirements of Table 3: Aggregate Consensus Properties Criteria in Section 703.07 for the design traffic level.

e. Each of the first 2 control tests for a Method A or B lot fall outside the upper or lower limits for VMA, Voids @ Nd, or Percent PGAB; or under Method C, each of the first 2 control tests for the lot fall outside the upper or lower limits for the nominal maximum, 2.36 mm, 0.300 mm or 0.075 mm sieves, or percent PGAB.

f. The Flat and Elongated Particles value exceeds 10% by ASTM D4791.

g. There is any visible damage to the aggregate due to over-densification other than on variable depth shim courses.

h. The Contractor fails to follow the approved QCP.

i. The Contractor's control chart shows the process to be out of control (defined as a single point outside of the control limits on the running average of three chart.) on any property listed in Table 3: Control Limits.

The Contractor shall immediately notify the Resident in writing as to the reason for shutdown, as well as the proposed corrective action. Failure to do so will be treated as a second incident under 106.4.6 QCP Non-compliance. The Department will consider corrective action acceptable if the pay factor for the failing property increases, based on samples already in transit, or a verification sample is tested and the property falls within the specification limits.

In cases where the corrective action can be accomplished immediately, such as batch weight or cold feed changes, the Contractor may elect to resume production once the corrective action is completed. Additional QC testing shall be performed to verify the effectiveness of the corrective action. Subsequent occurrences of shutdown for the same property in a Lot in progress will require paving operations to cease. Paving operations shall not resume until the Contactor and the Department determines that material meeting the Contract requirements will be produced. The Department may allow the Contractor to resume production based upon a passing QC sample, with a split of the sample being sent to the Department for verification testing. If the submitted verification sample test results fall outside the specification limits, the Contractor shall cease production until a verification sample is submitted to the Department has been tested by the Department and found to be within specification limits.
.
The Department retains the exclusive right, with the exception of the first day's production of a new JMF, to determine whether the resumption of production involves a significant change to the production process. If the Department so determines, then the current lot will be terminated, a pay factor established, and a new lot will begin.

<u>401.19 Quality Control Method D</u> For Items covered under Method D, the Contractor shall submit a modified QC Plan detailing, how the mix is to be placed, what equipment is to be used, and what HMA plant is to be used. All mix designs (JMF) shall be approved and verified by MDOT prior to use. Certified QC personnel shall not be required. The Contractor shall certify the mix and the test results for each item by a Certificate of Compliance.

401.20 Acceptance Method A, B & C These methods utilizes Quality Level Analysis and pay factor specifications.
For Hot Mix Asphalt Pavement designated for acceptance under Quality Assurance provisions, the Department will sample once per sublot on a statistically random basis, test, and evaluate in accordance with the following Acceptance Criteria:

TABLE 4: ACCEPTANCE CRITERIA

PROPERTIES	POINT OF SAMPLING	TEST METHOD
Gradation	Paver Hopper	AASHTO T30
PGAB Content	Paver Hopper	AASHTO T308
%TMD (Surface)	Mat behind all Rollers	AASHTO T269
%TMD (Base or Binder)	Mat behind all Rollers	AASHTO T269
Air Voids at N_d	Paver Hopper	AASHTO T 312
%VMA at N_d	Paver Hopper	AASHTO T 312
Fines to Effective Binder	Paver Hopper	AASHTO T 312
%VFB	Paver Hopper	AASHTO T 312

On the first day of production of a JMF the Department will take three random samples, which will be used to calculate the quality level of the in-place material in the event the lot is terminated prematurely. Only one of the three will be tested, the other two will be held onsite until at least three random samples have been taken, at which time the other two will be discarded.

Lot Size For purposes of evaluating all acceptance test properties, a lot shall consist of the total quantity represented by each item listed under the lot size heading.

If the Department terminates a Lot prematurely, the samples from the first day's production will be used to calculate a volumetric pay factor, and a minimum of three cores will be used for a density pay factor, if applicable, for quantities placed to date.

Sublot size - Refer to section 401.201, 401.202, and 401.203 for minimum size and number of sublots. The quantity represented by each sample will constitute a sublot.

If there is less than one-half of a sublot remaining at the end, then it shall be combined with the previous sublot. If there is more than one-half sublot remaining at the end, then it shall constitute the last sublot and shall be represented by test results. If it becomes apparent partway through a Lot that, due to an underrun, there will be insufficient mix quantity to obtain the minimum number of sublots needed, the Resident may adjust the size of the remaining sublots and select new sample locations based on the estimated quantity of material remaining in the Lot.

Acceptance Testing The Department will obtain samples of Hot Mix Asphalt Pavement in conformance with AASHTO T168 Sampling Bituminous Paving Mixtures, and the Maine DOT Policies and Procedures for HMA Sampling and Testing, which will then be transported by the Contractor to the designated MDOT Laboratory within 48 hours (except when otherwise noted in the project specific QCP due to local restrictions), as directed by MDOT in approved transport containers to be provided by the Department, unless otherwise directed by the Resident. Failure to deliver an acceptance sample to the designated acceptance laboratory will be considered the second incident under 106.4.6–QCP Non-Compliance.

The Department will take the sample randomly within each sublot. Target values shall be as specified in the JMF. The Department will use Table 5 for calculating pay factors for gradation, PGAB Content, Air Voids at N_{design}, VMA, Fines to Effective Binder and VFB. The Department will withhold reporting of the test results for the Acceptance sample until 7:00 AM, on the second working day of receipt of the sample, or after receipt of the Contractors results of the Acceptance sample split. Upon conclusion of each lot, where there is a minimum of four sublots, results shall be examined for statistical outliers, as stated in Section 106.7.2 - Statistical Outliers.

Isolated Areas During the course of inspection, should it appear that there is an isolated area that is not representative of the lot based on a lack of observed compactive effort, excessive segregation or any other questionable practice, that area may be isolated and tested separately. An area so isolated that has a calculated pay factor below 0.80, based on three random tests shall be removed and replaced at the expense of the Contractor for the full lane width and a length not to be less than 50 m [150 ft].

Pavement Density The Department will measure pavement density using core samples tested according to AASHTO T-166. The Department will randomly determine core locations. The Contractor shall cut 6 inch diameter cores at no additional cost to the Department by the end of the working day following the day the pavement is placed, and immediately give them to the Department. The cores will be placed in a transport container provided by the Department and transported by the Contractor to the designated MDOT Lab as directed by the Department. Pre-testing of the cores will not be allowed. At the time of sampling, the Contractor and the Department shall mutually determine if a core is damaged. If it is determined that the core(s) is damaged, the Contractor shall cut new core(s) at the same offset and within 1 m [3 ft] of the initial sample. At the time the core is cut, the Contractor and the Department will mutually determine if saw cutting of the core is needed, and will mark the core at the point where sawing is needed. The core may be saw cut by the Contractor in the Department's presence onsite, or in an MDOT Lab by The Department, without disturbing the layer being tested to remove lower layers of Hot Mix Asphalt Pavement, gravel, or RAP. No recuts are allowed at a test location after the core has been tested. Upon conclusion of each lot, density results shall be examined for statistical outliers as stated in Section 106.7.2.

On all sections of overlay with wearing courses designed to be 19 mm [3/4 in] or less in thickness, there shall be no pay adjustment for density otherwise noted in Section 403 - Hot Bituminous Pavement. For overlays designed to be 19 mm [3/4 in] or less in thickness, density shall be obtained by the same rolling train and methods as used on mainline travelway surface courses with a pay adjustments for density, unless otherwise directed by the Department.

There shall be no pay adjustment for density on shoulders unless otherwise noted in Section 403 - Hot Bituminous Pavement. Density for shoulders shall be obtained by the same rolling train and methods as used on mainline travelway, unless otherwise directed by the Department. Efforts to obtain optimum compaction will not be waived by the Department unless it is apparent during construction that local conditions make densification to this point detrimental to the finished pavement surface course.

401.201 Method A Lot Size will be the entire production per JMF for the project, or if so agreed at the Pre-paving Conference, equal lots of up to 4500 Mg [4500 tons], with unanticipated over-runs of up to 1500 Mg [1500 ton] rolled into the last lot. Sublot sizes shall be 750 Mg [750 ton] for mixture properties, 500 Mg [500 ton] for base or binder densities and 250 Mg [250 ton] for surface densities. The minimum number of sublots for mixture properties shall be 4, and the minimum number of sublots for density shall be five.

TABLE 5: METHOD A ACCEPTANCE LIMITS

Property	USL and LSL
Passing 4.75 mm and larger sieves	Target +/-7%
Passing 2.36 mm to 1.18 mm sieves	Target +/-4%
Passing 0.60 mm	Target +/-3%
Passing 0.30 mm to 0.075 mm sieve	Target +/-2%
PGAB Content	Target +/-0.4%
Air Voids	4.0% +/-1.5%
Fines to Effective Binder	0.6 to 1.2
Voids in the Mineral Aggregate	LSL Only from Table 1
Voids Filled with Binder	Table 1 values plus a 4% production tolerance for USL only
% TMD (In place density)	95.0% +/- 2.5%

401.202 Method B Lot Size will be the entire production per JMF for the project and shall be divided into 3 equal sublots for Mixture Properties and 3 equal sublots for density.

TABLE 6: METHOD B ACCEPTANCE LIMITS

Property	USL and LSL
Percent Passing 4.75 mm and larger sieves	Target +/-7
Percent Passing 2.36 mm to 1.18 mm sieves	Target +/-5
Percent Passing 0.60 mm	Target +/-4
Percent Passing 0.30 mm to 0.075 mm sieve	Target +/-3
PGAB Content	Target +/-0.5
Air Voids	4.0% +/-2.0
Fines to Effective Binder	0.6 to 1.4
Voids in the Mineral Aggregate	LSL from Table 1
Voids Filled with Binder	Table1 plus a 4% production tolerance for USL.
% TMD (In-place Density)	95.0% +/- 2.5%

401.203 Testing Method C Lot Size will be the entire production per JMF for the project, or if so agreed at the Pre-paving Conference, equal lots of up to 4500 Mg [4500 tons], with unanticipated over-runs of up to 1500 Mg [1500 ton] rolled into the last lot. Sublot sizes shall be 750 Mg [750 ton] for mixture properties, 500 Mg [500 ton] for base or binder densities and 250 Mg [250 ton] for surface densities. The minimum number of sublots for mixture properties shall be 4, and the minimum number of sublots for density shall be five.

TABLE 7: METHOD C ACCEPTANCE LIMITS

Property	USL and LSL
Passing 4.75 mm and larger sieves	Target +/-7%
Passing 2.36 mm to 1.18 mm sieves	Target +/-5%
Passing 0.60 mm	Target +/-4%
Passing 0.30 mm to 0.075 mm sieve	Target +/-2%
PGAB Content	Target +/-0.4%
Air Voids	4.0% +/-1.5%
Fines to Effective Binder	0.6 to 1.2
Voids in the Mineral Aggregate	LSL Only from Table 1
Voids Filled with Binder	Table 1 values plus a 4% production tolerance for USL only
% TMD (In place density)	95.0% +/- 2.5%

401.204 Testing Method D For hot mix asphalt items designated as Method D in Section 403 - Hot Bituminous Pavement, one sample will be taken from the paver hopper or the truck body per 250 Mg [250 ton] per pay item. The mix will be tested for gradation and PGAB content. Disputes will not be allowed. If the mix is within the tolerances listed in Table 8: Method D Acceptance Limits, the Department will pay the contract unit price. If the test results for each 250 Mg [250 ton] increment are outside these limits, the following deductions (Table 8b) shall apply to the HMA quantity represented by the test.

TABLE 8: METHOD D ACCEPTANCE LIMITS

Property	USL and LSL
Percent Passing 4.75 mm and larger sieves	Target +/-7
Percent Passing 2.36 mm to 1.18 mm sieves	Target +/-5
Percent Passing 0.60 mm	Target +/-4
Percent Passing 0.30 mm to 0.075 mm sieve	Target +/-3
PGAB Content	Target +/-0.5
% TMD (In-place Density)	95.0% +/- 2.5%

TABLE 8b Method "D" Price Adjustments

PGAB Content	-5%
2.36 mm sieve	-2%
0.30 mm sieve	-1%
0.075 mm sieve	-2%
Density	-10%*

*Only applies when called for in Section 403 - Hot Bituminous Pavement. Contractor shall cut two 150 mm [6 in] cores, which shall be tested for percent TMD per AASHTO T-269. If the average for the two tests falls below 92.5% the disincentive shall apply.

401.21 Method of Measurement The Department will measure Hot Mix Asphalt Pavement by the Mg [ton] in accordance with Section 108.1 - Measurement of Quantities for Payment.

401.22 Basis of Payment The Department will pay for the work, in place and accepted, in accordance with the applicable sections of this Section, for each type of HMA specified.

The Department will pay for the work specified in Section 401.11, for the HMA used, except that cleaning objectionable material from the pavement and furnishing and applying bituminous material to joints and contact surfaces is incidental.

Payment for this work under the appropriate pay items shall be full compensation for all labor, equipment, materials, and incidentals necessary to meet all related contract requirements, including design of the JMF, implementation of the QCP, obtaining core samples, transporting cores and samples, filling core holes, applying emulsified asphalt to joints, and providing testing facilities and equipment.

The Department will make a pay adjustment for quality as specified below.

401.221 Pay Adjustment The Department will sample, test, and evaluate Hot Mix Asphalt Pavement in accordance with Section 106 - Quality and Section 401.20 - Acceptance, of this Specification.

401.222 Pay Factor (PF) The Department will use the following criteria for pay adjustment using the pay adjustment factors under Section 106.7 - Quality Level Analysis:

Density If the pay factor for Density falls below 0.80 for Method A or C or 0.86 for Method B, all of the cores will be randomly recut by Sublot. A new pay factor will be calculated that combines all initial and retest results. If the resulting pay factor is below 0.80 for Method A or C or below 0.86 for Method B, the entire Lot shall be removed and replaced with material meeting the specifications at no additional cost to the Department, except that the Department may, when it appears that there is a distinct pattern of defective material, isolate any defective material by investigating each mix sample sublot and require removal of defective mix sample sublots only, leaving any acceptable material in place if it is found to be free of defective material. Pay factors equal to or greater than the reject level will be paid accordingly.

Gradation For HMA evaluated under Acceptance Method A or B, the Department will determine a composite pay factor (CPF) using applicable price adjustment factors "f" from Table 9: Table of Gradation Composite "f" Factors, and Acceptance limits from Table 5: Method A Acceptance Limits, for Method A or Table 6: Method B Acceptance Limits, for Method B. The Department will not make price adjustments for gradation on Methods A and B, but will monitor them as shutdown criteria.

TABLE 9: TABLE OF GRADATION COMPOSITE " f " FACTORS
(Methods A and B)

Constituent		"f" Factor			
		19 mm	12.5 mm	9.5 mm	4.75 mm
Gradation	25 mm	-	-	-	-
	19 mm	4	-	-	-
	12.5 mm		4	4	-
	9.50 mm				4
	2.36 mm	6	6	6	8
	1.18 mm				
	0.60 mm	2	2	2	2
	0.30 mm	2	2	2	2
	0.075 mm	6	6	6	8

For HMA evaluated under Acceptance Method C, the Department will determine a pay factor using acceptance limits from Table **7**: Method C Acceptance Limits.

VMA, Air Voids, VFB and Fines to Effective Binder The Department will determine a pay factor (PF) using the applicable Acceptance Limits.

The following variables will be used for pay adjustment:

PA = Pay Adjustment
Q = Quantity represented by PF in Mg [ton]
P = Contract price per Mg [ton]
PF = Pay Factor

Pay Adjustment Method A

The Department will use the following criteria for pay adjustment: density, Performance Graded Asphalt Binder content, voids @N_d, VMA, VFB, F/B_{eff}, and the screen sizes listed in Table 9 for the type of HMA represented in the JMF. If any single pay factor for PGAB Content, VMA, or Air Voids falls below 0.80, then the composite pay factor for PGAB Content, VMA, and Air Voids shall be 0.55.

Density: For mixes having a density requirement, the Department will determine a pay factor using Table 5: Method A Acceptance Limits:

PA = (density PF- 1.0)(Q)(P)x0.50

PGAB Content, VMA and Air Voids: The Department will determine a pay adjustment using Table 5: Method A Acceptance Limits as follows:

PA = (voids @ N_d PF- 1.0)(Q)(P)x0.20 + (VMA @ N_d PF- 1.0)(Q)(P)x0.20 + (PGAB PF- 1.0)(Q)(P)x0.10

VFB and Fines to Effective Binder The Department will determine a pay factor (PF) using Table 5: Method A Acceptance Limits. The Department will not make price adjustments for VFB or Fines to Effective Binder, but will monitor them as shutdown criteria.

Pay Adjustment Method B

The Department will use the following criteria for pay adjustment: density, Performance Graded Asphalt Binder content, voids @N_d, VMA, VFB, F/B_{eff}, and the screen sizes listed in Table 9 for the type of HMA represented in the JMF. If any single pay factor for PGAB Content, VMA, or Air Voids falls below 0.86, then the composite pay factor for PGAB Content, VMA, and Air Voids shall be 0.70.

Density: For mixes having a density requirement, the Department will determine a pay factor using Table 6: Method B Acceptance Limits:

PA = (density PF- 1.0)(Q)(P)x0.50

PGAB Content, VMA and Air Voids: The Department will determine a pay adjustment using Table 6: Method B Acceptance Limits as follows:

PA = (voids @ N_d PF- 1.0)(Q)(P)x0.20 + (VMA @ N_d PF- 1.0)(Q)(P)x0.20 + (PGAB PF- 1.0)(Q)(P)x0.10

VFB and Fines to Effective Binder The Department will determine a pay factor (PF) using Table 6: Method B Acceptance Limits. The Department will not make price adjustments for VFB or Fines to Effective Binder, but will monitor them as shutdown criteria.

Pay Adjustment Method C

The Department will use density, Performance Graded Asphalt Binder content, and the percent passing the nominal maximum, 2.36 mm, 0.300 mm and 0.075 mm sieves for the type of HMA represented in the JMF. If the PGAB content falls below 0.80, then the PGAB pay factor shall be 0.55.

Density: For mixes having a density requirement, the Department will determine a pay factor using Table 7: Method C Acceptance Limits:

PA = (density PF- 1.0)(Q)(P)x0.50

PGAB Content and Gradation The Department will determine a pay factor using Table **7**: Method C Acceptance Limits. The Department will calculate the price adjustment for Mixture Properties as follows:

PA = (% Passing Nom. Max PF-1.0)(Q)(P)X0.05+(% passing 2.36 mm PF-1.0)(Q)(P)X0.05+(%passing 0.30 mm PF-1.0)(Q)(P)X0.05+(%passing 0.075 mm PF-1.0)(Q)(P)X0.10+(PGAB PF-1.0)(Q)(P)X0.25

VMA, Air Voids, VFB and Fines to Effective Binder The Department will determine a pay factor (PF) using Table 7: Method C Acceptance Limits. The Department will not make price adjustments for VMA, Air Voids, VFB or Fines to Effective Binder, but will monitor them as shutdown criteria.

Pay Adjustment Method D

The Department will use density, Performance Graded Asphalt Binder content, and the screen sizes listed in Table 8b for the type of HMA represented in the JMF. If test results do not meet the Table 8 requirements, deducts as shown in Table 8b shall be applied to the quantity of mix represented by the test.

401.223 Process for Dispute Resolution (Methods A B & C only)

a. Dispute Resolution sampling At the time of Hot-Mix Asphalt sampling, the Department will obtain a split sample of each Acceptance test random sample for possible dispute resolution testing. The Contractor shall also obtain a split sample of the HMA at this same time. If the Contractor wishes to retain the option of requesting dispute testing of the initial Acceptance sample, the Contractor will test their split of the

Acceptance sample and shall report their results to the Resident, with a copy to the QA Engineer at the Central Laboratory in Bangor by 7:00 AM, on the second working day from time of QA sampling, otherwise dispute resolution will not be initiated. The Department's dispute resolution split sample will be properly labeled and stored for a period of not more than two weeks, or until the sample is tested.

b. Disputing Acceptance results The Contractor may dispute the Department's Acceptance results and request (Methods A, B, & C) that the dispute resolution split sample be tested by notifying the Department's Resident and the QA Engineer at the Central Laboratory in Bangor in writing within two working days after receiving the results of the Acceptance test. The following shall be provided in the request:

- Acceptance sample reference number
- The specific test result(s) or property(ies) being disputed, and
- The complete, signed report of the Contractor's testing (In a lab certified by the NETTCP and MDOT) of their split of the Acceptance sample indicating that the variances in Table10: Dispute Resolution Variance Limits, for the specific test result(s) or property(ies) were exceeded.

c. Disputable items The Contractor may dispute any or all of the following Method A or B test results when the difference between the Department's value and the Contractor's value for that test equals or exceeds the corresponding allowable variation in Table 10: Dispute Resolution Variance Limits, PGAB content, G_{mb}, and G_{mm}. In addition, if the allowable variation for these tests is not met or exceeded, the Contractor may dispute either or both of the following material properties provided the difference between results for them equals or exceeds the corresponding allowable variation in Table 10: Voids at N_{design}, and VMA.
For Method C only: The results for PGAB content and the screen sizes used for pay adjustment may be disputed.

d. Outcome The value of any disputed result or property reported for the initial Acceptance sample shall stand if the value reported for the dispute resolution sample is not closer to the value the Contractor reported for their split sample than to the value reported for the initial Acceptance sample. If the value reported for the dispute resolution falls precisely half-way between the other two values the value reported for the dispute resolution will replace the original acceptance value. Otherwise, the value reported for the dispute resolution sample will replace the value reported for the initial Acceptance sample, and will be used to re-calculate any other affected results or properties.

TABLE 10: DISPUTE RESOLUTION VARIANCE LIMITS

PGAB Content	+/-0.4%
G_{mb}	+/-0.030
G_{mm}	+/-0.020
Voids @ N_d	+/-0.8%
VMA	+/-0.8%
Passing 4.75 mm and larger sieves	+/- 4.0%
Passing 2.36 mm to 0.60 mm sieves	+/- 3.0%
Passing 0.30 mm to 0.15	+/- 2.0 %
0.075 mm sieve	+/- 1.0%

SECTION 402 - PAVEMENT SMOOTHNESS

402.00 Smoothness Projects Projects to have their pavement smoothness analyzed in accordance with this Specification will be so noted in Special Provision 403 - Bituminous Box

402.01 Pavement Smoothness The final pavement surface shall be evaluated for smoothness using a Class I or Class II profiler as defined by ASTM E950 (94). Smoothness measurements will be expressed in terms of the International Roughness Index (IRI) as defined by the World Bank, in units of inches/mile.

402.02 Lot Size Lot size for smoothness will be 1000 lane-meters [3000 lane-feet]. A sublot will consist of 20 lane-meters [50 lane-feet]. Partial lots will be included in the previous lot if less than one-half the size of a normal lot. If equal to or greater than one-half the normal lot size, it will be tested as a separate lot.

402.03 Acceptance Testing The Department will conduct Acceptance testing following completion of the surface course. Sections to be excluded from testing include the following:

Bridge decks and joints (no smoothness measurements will be taken within 30 m [100 ft] of bridge joints)
Acceleration and deceleration lanes
Shoulders and ramps
Side streets and roads
Within 30 m [100 ft] of transverse joints at the beginning and end of the project
Within 30 m [100 ft] of railroad crossings
Urban areas with speed limits of 50 kph [30 mph] or lower

Each lot shall have 2 measurements made in each wheel path. The average of the 4 measurements will determine the smoothness for that lot.

The smoothness measurements will be statistically evaluated for pay factors as described in Subsection 106.7 - Quality Level Analysis, using the specification limits shown below.

ACCEPTANCE LIMITS

Level	USL
I	0.95 m/km [60 in/mile]
II	1.10 m/km [70 in/mile]
III	1.25 m/km [80 in/mile]

Computation of Smoothness Pay Adjustment:

PA = (PF-1.0)(Q)(P)
where:
Q = Quantity of surface course in the Lot (excluding shoulders, side streets, bridge decks, ramps, acceleration and deceleration lanes)
PF = smoothness pay factor for the Lot
P = Contract unit price for surface pavement
PA = pay adjustment

402.04 Unacceptable Work In the event that any Lot is found to have a pay factor less than 0.80, the Contractor shall take whatever remedial action is required to correct the pavement surface in that Lot at no additional expense to the Department. Such remedial action may include but is not limited to removal and replacement of the unacceptable pavement. In the event remedial action is necessary, the Contractor shall

submit a written plan to the Resident outlining the scope of the remedial work. The Resident must approve this plan before the remedial work can begin. Following remedial work, the Lot shall be retested, and will be subject to the specification limits listed above. The resulting pay factor, if within the acceptable range, will be used in the final pay adjustment. The Contractor shall pay the cost of retesting the pavement following corrective action.

Localized surface tolerance defects will be subject to the provisions outlined in Section 401.101 Surface Tolerances.

Payment will be made under:

Pay Item	Pay Unit
402.10 Incentive/Disincentive - Pavement Smoothness	Lump Sum

SECTION 403 - HOT BITUMINOUS PAVEMENT

403.01 Description This work shall consist of constructing one or more courses of bituminous pavement on an approved base in accordance with these specifications, and in reasonably close conformity with the lines, grades, thickness and typical cross sections shown on the plans or established.

The bituminous pavement shall be composed of a mixture of aggregate, filler if required, and bituminous material.

403.02 General The materials and their use shall conform to the requirements of Section 401 - Hot Mix Asphalt Pavement.

403.03 Construction The construction requirements shall be as specified in Section 401 - Hot Mix Asphalt Pavement.
In addition, hot bituminous pavement placed on bridges shall also conform to the following requirements.

a. The mixture shall be composed of aggregate, PGAB and mineral filler but no recycled asphalt pavement and placed in courses as specified in the Special Provisions.

b. The bottom course shall be placed with an approved rubber mounted bituminous paver of such type and operated in such a manner that the membrane waterproofing will not be damaged in any way.

c. The top course shall not be placed until the bottom course has cooled sufficiently to provide stability.

d. The Contractor will not be required to cut sample cores from the compacted pavement on the bridge deck.

e. After the top course has been placed, the shoulder areas shall be sealed 1 meter [3 ft] wide with two applications of an emulsified bituminous sealer meeting the requirements of Section 702.12 - Emulsified Bituminous Sealing Compound. The first application shall be pre-mixed with fine, sharp sand, similar to mortar sand, as needed to fill all voids in the mix in the area being sealed. The second application may be applied without sand. The sealer shall be carried to the curb at the gutter line in sufficient quantity to leave a bead or fillet of material at the face of the curb. The area to be sealed shall be clean, dry and the surface shall be at ambient temperature.

f. The furnishing and applying of the required quantity of sealer for the bridge shoulder areas shall be incidental to placing the hot bituminous pavement.

g. The atmospheric temperature for all courses on bridge decks shall be 10°C [50°F] or higher.

403.04 Method of Measurement Hot bituminous pavement will be measured as specified in Section 401.21-Method of Measurement.

403.05 Basis of Payment The accepted quantities of hot bituminous pavement will be paid for at the contract unit price per Megagram [ton] for the bituminous mixtures, including bituminous material complete in place.

Method A, Method B, Method C and Method D shall be used for acceptance as specified in Section 401 - Hot Mix Asphalt Pavements. (See Complementary Notes, Section 403 - Hot Bituminous Pavement, for Method location).

Payment will be made under:

Pay Item		Pay Unit
403.102	Hot Mix Asphalt Pavement for Special Areas	MG [Ton]
403.206	Hot Mix Asphalt, 25 mm Nominal Maximum Size	MG [Ton]
403.207	Hot Mix Asphalt, 19.0 mm Nominal Maximum Size	MG [Ton]
403.208	Hot Mix Asphalt, 12.5 mm Nominal Maximum Size	MG [Ton]
403.209	Hot Mix Asphalt, 9.5 mm Nominal Maximum Size (sidewalks, drives, islands & incidentals)	MG [Ton]
403.210	Hot Mix Asphalt, 9.5 mm Nominal Maximum Size	MG [Ton]
403.211	Hot Mix Asphalt (shimming)	MG [Ton]
403.212	Hot Mix Asphalt, 4.75 mm Nominal Maximum Size	MG [Ton]
403.213	Hot Mix Asphalt, 12.5 mm Nominal Maximum Size, Base	MG [Ton]

SPECIAL PROVISION
SECTION 403
HOT MIX ASPHALT

Desc. of Course	Grad. Design	Item Number	Bit Cont. % of Mix	Total Thick	No. Of Layers	Comp. Notes
			Overlay Areas			
Wearing	9.5mm	403.210	N/A	1 ¼”	1	1,4,10,17
Shim	9.5mm	403.211	N/A	variable	1	1,4,10,17
			Reconstruction Areas			
Wearing	9.5mm	403.210	N/A	1 ¼”	1	1,4,10,17
Base	12.5mm	403.213	N/A	1 ¾”	1	1,4,10,17

COMPLEMENTARY NOTES

1. All work under this contract shall conform to the 2009 Special Provision 400 - Hot Mix Asphalt Pavement; with the following revisions.
2. The density requirements are waived.
4. The design traffic level for mix placed shall be 0.3 to <3 million ESALS. The design, verification, Quality Control, and acceptance tests for this mix will be performed at 50 Gyrations. The required PGAB for all mixtures will meet a **PG 58-28** to **PG 64-28** grading. The Contractor must stipulate which PGAB grading will be used to construct the entire HMA pavement structure prior to starting work. Changes to the PGAB grading must be approved by the Department prior to the change in PGAB grading.
10. Section 106.6 Acceptance, (2) Method D - For hot mix asphalt items designated as Method D in Special Provision Section 403 --Hot Mix Asphalt, one sample will be taken from the paver hopper or the truck body per **250** ton, per pay item. The mix will be tested for gradation and PGAB content. Disputes will not be allowed. If the mix is within the tolerances listed in Table 9, below the Department will pay the contract unit price.

Table 9

Property	USL and LSL
	Method D
Percent Passing 4.75 mm [No. 4] and larger sieves	Target ± 7
Percent Passing 2.36 mm [No. 8] to 1.18 mm [No. 16] sieves	Target ± 5
Percent Passing 0.60 mm [No. 30]	Target ± 4
Percent Passing 0.30 mm {No. 50] to 0.075 mm [No. 200] sieve	Target ± 3
PGAB Content	Target ± 0.5
In –Place Density	Minimum 92.5

If the test results for each **250** ton increment are outside these limits the following deductions (Table 9b) shall apply to the HMA quantity represented by the test. A second consecutive failing test shall result in cessation of production

TABLE 9b

PGAB Content	-5%
2.36 mm sieve	-2%
0.30 mm sieve	-1%
0.075 mm sieve	-2%
In-Place Density	N/A

17. The Contractor shall cut two (2) 6 inch core per **250** ton per pay item., which shall be tested for percent TMD per AASHTO T-269. If the average of the two test results is below 92.5%, the area represented by the test will be isolated and tested separately. A minimum of two additional cores shall be randomly selected from the isolated area. If the core results from the isolated area average below 92.5 %, the effected area shall be removed and replaced at the expense of the Contractor for the full lane width to the limits determined by the Department..

Tack Coat

A tack coat of emulsified asphalt, RS-1, Item 409.15 shall be applied to any existing pavement at a rate of approximately 0.025 gal/yd², and on milled pavement approximately 0.05 gal/yd² prior to placing a new course. A fog coat of emulsified asphalt shall be applied between shim /base courses and the surface course, at a rate not to exceed 0.025 gal/yd².

Cleaning objectionable material from the pavement and furnishing and applying Item 409.15 bituminous material to joints and contact surfaces is incidental.

SPECIAL PROVISION
SECTION 504
CONCRETE PIPE TIES

Description This work shall consist of furnishing and installing concrete pipe ties in conformance with the Standard Details.

Materials All materials shall meet the requirements shown in the Standard Details.

Method of Measurement Concrete pipe ties shall be measured per Group (2 ties per Group).

Basis of Payment The accepted quantity of concrete pipe ties will be paid for at the contract unit price per Group. Such payment will be full compensation for furnishing, installing, and all other necessary incidentals for satisfactory completion of the work. Any grout or mortar necessary to repair chipping shall be incidental to the installation of the pipe ties.

Pay Item	Pay Unit
504.07 Concrete Pipe Ties	Group

Weston
15968.00
June 19, 2009

SPECIAL PROVISION
SECTION 603
Pipe Culverts and Storm Drains

603.12 Basis of Payment: This section shall be amended with the addition of the following:

Pay Item		Pay Unit
603.255	60” RCP Class III	LF

SPECIAL PROVISION
SECTION 606
GUARDRAIL

606.01 Description This work shall consist of furnishing and installing guardrail components in accordance with these specifications and in reasonably close conformity with the lines and grades shown on the plans or as established. The types of guardrail are designated as follows:

Type 3-Galvanized steel "w" beam, wood posts or galvanized steel posts.
Type 3a-Galvanized steel "w" beam, wood posts, wood or composite offset blocks.
Type 3aa-Corrosion resistant steel "w" beam, wood posts, wood or composite offset blocks.
Type 3b-Galvanized steel "w" beam, galvanized steel posts, galvanized steel offset blocks.
Type 3c-Galvanized steel "w" beam, wood posts or galvanized steel posts, wood or composite offset blocks.
Type 3d-Galvanized steel "w" beam, galvanized steel posts, wood or composite offset blocks.
Thrie Beam-Galvanized steel thrie beam, wood posts or galvanized steel posts, wood or composite offset blocks.

Median barriers shall consist of two beams of the above types, mounted on single posts. Except for thrie beam, median barriers may include rub rails when called for.

Bridge mounted guardrail shall consist of furnishing all labor, materials, and equipment necessary to install guardrail as shown on the plans. This work shall also include drilling for and installation of offset blocks if specified, and incidental hardware necessary for satisfactory completion of the work.

Remove and Reset and Remove, Modify, and Reset guardrail shall consist of removing the existing designated guardrail and resetting in a new location as shown on the plans or directed by the Resident. Remove, Modify, and Reset guardrail and Modify guardrail include the following guardrail modifications: Removing plate washers at all posts, except at anchorage assemblies as noted on the Standard Details, Adding offset blocks, and other modifications as listed in the Construction Notes or General Notes. Modifications shall conform to the guardrail Standard Details.

Bridge Connection shall consist of the installation and attachment of beam guardrail to the existing bridge. This work shall consist of constructing a concrete end post or modifying an existing endpost as required, furnishing, and installing a terminal connector, necessary hardware, and incidentals required to complete the work as shown on the plans. Bridge Transition shall consist of a bridge connection and furnishing and installing guardrail components as shown in the Standard Details.

606.02 Materials Materials shall meet the requirements specified in the following Sections of Division 700 - Materials:

Timber Preservative	708.05
Metal Beam Rail	710.04
Guardrail Posts	710.07
Guardrail Hardware	710.08

Guardrail components shall meet the applicable standards of "A Guide to Standardized Highway Barrier Hardware" prepared and approved by the AASHTO-AGC-ARTBA Joint Cooperative Committee, Task Force 13 Report.

Posts for underdrain delineators shall be “U” channel steel, 2.44m [8 ft] long, 3.72 kg/m [2 ½ lb/ft] minimum and have 9.5 mm [3/8 in] round holes, 25 mm [1 in] center to center for a minimum distance of 610 mm [2 ft] from the top of the post.

Reflectorized Flexible Guardrail Markers shall be mounted on all guardrails. A marker shall be mounted onto guardrail posts at the flared end treatment’s terminal and its tangent point, both at the leading and trailing ends of each run of guardrail. The marker’s flexible posts shall be grey with either silver-white or yellow reflectors (to match the edge line striping) at the tangents, red at leading ends, and green at trailing ends. Whenever the end treatment is not flared, markers will only be required at the end treatment’s terminal. These shall be red or green as appropriate. Markers shall be installed on the protected side of guardrail posts unless otherwise approved by the Resident. Reflectorized flexible guardrail markers shall be from the Maine DOT’s Approved Product List of Guardrail Material. The marker shall be grey, flexible, durable, and of a non-discoloring material to which 75 mm [3 in] by 225 mm [9 in] reflectors shall be applied, and capable of recovering from repeated impacts. Reflective material shall meet the requirements of Section 719.01 for ASTM D 4956 Type III reflective sheeting. The marker shall be secured to the guardrail post with two fasteners, as shown in the Standard Details.

Reflectorized beam guardrail (“butterfly”-type) delineators shall be mounted on all “w”-beam guardrail. The delineators shall be mounted within the guardrail beam at guardrail posts. Delineators shall be fabricated from high-impact, ultraviolet & weather resistant thermoplastic. Reflectorized beam guardrail delineators shall be placed at approximately 20 m [62.5 ft] intervals or every tenth post on tangents and at approximately 10 m [31.25 ft] intervals or every fifth post on curves. Exact locations of the delineators shall be as directed by the Resident. On divided highways, the left hand delineators shall be yellow and the right hand delineators shall be silver/white. On two directional highways, the right hand side shall be silver/white and no reflectorized delineator used on the left. All reflectors shall have reflective sheeting applied to only one side of the delineator facing the direction of traffic as shown in the Standard Detail 606(07). Reflectorized sheeting for guardrail delineators shall meet the requirements of Section 719.01.

Single wood post shall be of cedar, white oak, or tamarack, well seasoned, straight, and sound and have been cut from live trees. The outer and inner bark shall be removed and all knots trimmed flush with the surface of the post. Posts shall be uniform taper and free of kinks and bends.

Single steel post shall conform to the requirements of Section 710.07 b.

Single steel pipe post shall be galvanized, seamless steel pipe conforming to the requirements of ASTM A120, Schedule No. 40, Standard Weight.

Acceptable multiple mailbox assemblies shall be listed on the Department’s Approved Products List and shall be NCHRP 350 tested and approved.

The Guardrail 350 Flared Terminal shall be a terminal with a 1.2 m [4 ft] offset as shown in the Manufacturer's installation instructions.

Existing materials damaged or lost during adjusting, removing and resetting, or removing, modifying, and resetting, shall be replaced by the Contractor without additional compensation. Existing guardrail posts and guardrail beams found to be unfit for reuse shall be replaced when directed by the Resident.

606.03 Posts Posts for guardrail shall be set plumb in holes or they may be driven if suitable driving equipment is used to prevent battering and distorting the post. When posts are driven through pavement, the damaged area around the post shall be repaired with approved bituminous patching. Damage to lighting and signal conduit and conductors shall be repaired by the Contractor.

When set in holes, posts shall be on a stable foundation and the space around the posts, backfilled in layers with suitable material, thoroughly tamped.

The reflectorized flexible guardrail markers shall be set plumb with the reflective surface facing the oncoming traffic. Markers shall be installed on the protected side of guardrail posts. Markers, which become bent or otherwise damaged, shall be removed and replaced with new markers.

Single wood posts shall be set plumb in holes and backfilled in layers with suitable material, thoroughly tamped. The Resident will designate the elevation and shape of the top. The posts, that are not pressure treated, shall be painted two coats of good quality oil base exterior house paint.

Single steel posts shall be set plumb in holes as specified for single wood posts or they may be driven if suitable driving equipment is used to prevent battering and distorting the post.

Additional bolt holes required in existing posts shall be drilled or punched, but the size of the holes shall not exceed the dimensions given in the Standard Details. Metal around the holes shall be thoroughly cleaned and painted with two coats of approved aluminum rust resistant paint. Holes shall not be burned.

606.04 Rails Brackets and fittings shall be placed and fastened as shown on the plans. Rail beams shall be erected and aligned to provide a smooth, continuous barrier. Beams shall be lapped with the exposed end away from approaching traffic.

End assemblies shall be installed as shown on the plans and shall be securely attached to the rail section and end post.

All bolts shall be of sufficient length to extend beyond the nuts but not more than 13 mm [½ in]. Nuts shall be drawn tight.

Additional bolt holes required in existing beams shall be drilled or punched, but the size of the holes shall not exceed the dimensions given in the Standard Details. Metal around the holes shall be thoroughly cleaned and painted with two coats of approved aluminum rust resistant paint. Holes shall not be burned.

606.045 Offset Blocks The same offset block material is to be provided for the entire project unless otherwise specified.

606.05 Shoulder Widening At designated locations the existing shoulder of the roadway shall be widened as shown on the plans. All grading, paving, seeding, and other necessary work shall be in accordance with the Specifications for the type work being done.

606.06 Mail Box Post Single wood post shall be installed at the designated location for the support of the mailbox. The multiple mailbox assemblies shall be installed at the designated location in accordance with the Standard Details and as recommended by the Manufacturer. Attachment of the mailbox to the post will be the responsibility of the home or business owner.

606.07 Abraded Surfaces All galvanized surfaces of new guardrail and posts, which have been abraded so that the base metal is exposed, and the threaded portions of all fittings and fasteners and cut ends of bolts shall be cleaned and painted with two coats of approved rust resistant paint.

606.08 Method of Measurement Guardrail will be measured by the meter [linear foot] from center to center of end posts along the gradient of the rail except where end connections are made to masonry or steel structures, in which case measurement will be as shown on the plans.

Terminal section, low volume end, NCHRP 350 end treatments, reflectorized flexible guardrail marker, terminal end, bridge transition, bridge connection, multiple mailbox post, and single post will be measured by each unit of the kind specified and installed.

Widened shoulder will be measured as a unit of grading within the limits shown on the plans.

Excavation in solid rock for placement of posts will be measured by the cubic meter [cubic yard] determined from the actual depth of the hole and a hypothetical circle diameter of 600 mm [2 ft].

606.09 Basis of Payment The accepted quantities of guardrail will be paid for at the contract unit price per meter [linear foot] for the type specified, complete in place. Reflectorized beam guardrail (“butterfly”-type) delineators will not be paid for directly, but will be considered incidental to guardrail items. Terminal section, buffer end, NCHRP 350 end treatment, bridge connection, single post and reflectorized flexible guardrail markers will be paid for at the contract unit price each for the kind specified complete in place.

NCHRP 350 end treatments and low volume guardrail ends will be paid for at the contract price each, complete in place which price shall be full payment for furnishing and installing all components including the terminal section, posts, offset blocks, "w" beam, cable foundation posts, plates and for all incidentals necessary to complete the installation within the limits as shown on the Standard Details or the Manufacturer’s installation instructions. Each end treatment will be clearly marked with the manufacturers name and model number to facilitate any future needed repair. Such payment shall also be full compensation for furnishing all material, excavating, backfilling holes, assembling, and all incidentals necessary to complete the work, except that for excavation for posts or anchorages in solid ledge rock, payment will be made under Pay Item 206.07. Type III Retroreflective Adhesive Sheeting

shall be applied to the approach buffer end sections and sized to substantially cover the end section. On all roadways, the ends shall be marked with alternating black and retroreflective yellow stripes. The stripes shall be 75 mm [3 in] wide and sloped down at an angle of 45 degrees toward the side on which traffic is to pass the end section. Guardrail 350 flared terminal shall also include a set of installation drawings supplied to the Resident.

Anchorages to bridge end posts will be part of the bridge work. Connections thereto will be considered included in the unit bid price for guardrail.

Guardrail to be placed on a radius of curvature of 45 m [150 ft] or less will be paid for under the designated radius pay item for the type guardrail being placed.

Widened shoulder will be paid for at the contract unit price each complete in place and will be full compensation for furnishing and placing, grading and compaction of aggregate subbase and any required fill material.

Adjust guardrail will be paid for at the contract unit price per meter and will be full compensation for adjusting to grade. Payment shall also include adjusting terminal end treatments where required.

Modify guardrail will be paid for at the contract unit price per meter and will be full compensation for furnishing and installing offset blocks, additional posts, and other specified modifications; removing, modifying, installing, and adjusting to grade existing posts and beams; removing plate washers and backup plates, and all incidentals necessary to complete the work. Payment shall also include removing and resetting terminal ends where required.

Remove and Reset guardrail will be paid for at the contract unit price per meter and will be full compensation for removing, transporting, storing, reassembling all parts, necessary cutting, furnishing new parts when necessary, reinstalling at the new location, and all other incidentals necessary to complete the work. Payment shall also include removing and resetting terminal ends when required. No payment will be made for guardrail removed, but not reset and all costs for such removal shall be considered incidental to the various contract pay items.

Remove, Modify, and Reset guardrail will be paid for at the contract unit price per meter and will be full compensation for the requirements listed in Modify guardrail and Remove and Reset guardrail.

Bridge Connections will be paid for at the contract unit price each. Payment shall include, attaching the connection to the endpost including furnishing and placing concrete and reinforcing steel necessary to construct new endposts if required, furnishing and installing the terminal connector, and all miscellaneous hardware, labor, equipment, and incidentals necessary to complete the work.

Bridge Transitions will be paid for at the contract unit price each. Payment shall include furnishing and installing the thrie beam or “w”-beam terminal connector, doubled beam section, and transition section, where called for, posts, hardware, precast concrete transition curb, and any other necessary materials and labor, including the bridge connection as stated in the previous paragraph.

Payment will be made under:

	Pay Item	Pay Unit
606.15	Guardrail Type 3a-Single Rail	meter [Linear Foot]
606.151	Guardrail Type 3aa-Single Rail	meter [Linear Foot]
606.17	Guardrail Type 3b-Single Rail	meter [Linear Foot]
606.1721	Bridge Transition - Type I	Each
606.1722	Bridge Transition - Type II	Each
606.1731	Bridge Connection - Type I	Each
606.1732	Bridge Connection - Type II	Each
606.178	Guardrail Beam	meter [Linear foot]
606.18	Guardrail Type 3b - Double Rail	meter [Linear foot]
606.19	Guardrail Type 3a - 4.5 m [15 ft] radius and less	meter [Linear Foot]
606.191	Guardrail Type 3aa - 4.5 m [15 ft] radius and less	meter [Linear Foot]
606.20	Guardrail Type 3a - over 4.5 m [15 ft] radius	meter [Linear Foot]
606.201	Guardrail Type 3aa - over 4.5 m [15 ft] radius	meter [Linear Foot]
606.21	Guardrail Type 3b - 4.5 m [15 ft] radius and less	meter [Linear Foot]
606.22	Guardrail Type 3b - over 4.5 m [15 ft] radius	meter [Linear Foot]
606.23	Guardrail Type 3c - Single Rail	meter [Linear Foot]
606.2301	Guardrail Type 3c - Double Rail	meter [Linear Foot]
606.231	Guardrail Type 3c - 4.5 m [15 ft] radius and less	meter [Linear Foot]
606.232	Guardrail Type 3c - over 4.5 m [15 ft] radius	meter [Linear Foot]
606.24	Guardrail Type 3d - Single Rail	meter [Linear Foot]
606.2401	Guardrail Type 3d - Double Rail	meter [Linear Foot]
606.241	Guardrail Type 3d - 4.5 m [15 ft] radius and less	meter [Linear Foot]
606.242	Guardrail Type 3d - over 4.5 m [15 feet] radius	meter [Linear Foot]
606.25	Terminal Connector	Each
606.257	Terminal Connector - Thrie Beam	Each
606.265	Terminal End-Single Rail - Galvanized Steel	Each
606.266	Terminal End-Single Rail - Corrosion Resistant Steel	Each
606.275	Terminal End-Double Rail - Galvanized Steel	Each
606.276	Terminal End-Double Rail - Corrosion Resistant Steel	Each
606.353	Reflectorized Flexible Guardrail Marker	Each
606.354	Remove and Reset Reflectorized Flexible Guardrail Marker	Each
606.356	Underdrain Delineator Post	Each
606.358	Guardrail, Modify, Type 3b to 3c	meter [Linear Foot]
606.3581	Guardrail, Modify Existing to Type 3d	meter [Linear Foot]
606.362	Guardrail, Adjust	meter [Linear Foot]
606.365	Guardrail, Remove, Modify, and Reset, Type 3b to 3c	meter [Linear Foot]
606.3651	Guardrail, Remove, Modify, and Reset Existing to Type 3d	meter [Linear Foot]
606.366	Guardrail, Removed and Reset, Type 3c	meter [Linear Foot]
606.367	Replace Unusable Existing Guardrail Posts	Each
606.47	Single Wood Post	Each
606.48	Single Galvanized Steel Post	Each
606.50	Single Steel Pipe Post	Each

606.51	Multiple Mailbox Support	Each
606.55	Guardrail Type 3 - Single Rail	meter [Linear Foot]
606.551	Guardrail Type 3 - Single Rail with Rub Rail	meter [Linear Foot]
606.56	Guardrail Type 3 - Double Rail	meter [Linear Foot]
606.561	Guardrail Type 3 - Double Rail with Rub Rail	meter [Linear Foot]
606.568	Guardrail, Modify Type 3c -Double Rail	meter [Linear Foot]
606.59	Guardrail Type 3 - 4.5 m [15 ft] radius and less	meter [Linear Foot]
606.60	Guardrail Type 3 - over 4.5 m [15 ft] radius	meter [Linear Foot]
606.63	Thrie Beam Rail Beam	meter [Linear Foot]
606.64	Guardrail Thrie Beam - Double Rail	meter [Linear Foot]
606.65	Guardrail Thrie Beam - Single Rail	meter [Linear Foot]
606.66	Terminal End Thrie Beam	Each
606.70	Transition Section - Thrie Beam	Each
606.71	Guardrail Thrie Beam - 4.5 m [15 ft] radius and less	meter [Linear Foot]
606.72	Guardrail Thrie Beam - over 4.5 m [15 ft] radius	meter [Linear Foot]
606.73	Guardrail Thrie Beam - Single Rail Bridge Mounted	meter [Linear Foot]
606.74	Guardrail Type 3 - Single Rail Bridge Mounted	meter [Linear Foot]
606.753	Widen Shoulder for Low Volume Guardrail End - Type 3	Each
606.754	Widen Shoulder for Guardrail 350 Flared Terminal	Each
606.78	Low Volume Guardrail End - Type 3	Each
606.79	Guardrail 350 Flared Terminal	Each

1. Reflectorized Flexible Guardrail Markers shall be from Maine DOT's Approved Product List of Guardrail Material.

2. Installation:
   a. Each bolt-hole diameter shall be the bolt diameter + 1/16".
   b. Wood post attachment - attach marker with 2, 5/16" diameter zinc-coated lag bolts, having 2" of embedment into wood post.
   c. Steel post attachment - attach marker with 2, 1/4" diameter zinc-coated bolt, washer and nut assemblies, having 1/2" of bolt extension behind steel post.
   d. When provided by the marker manufacturer, a stiffening pipe shall be inserted into the base of the marker prior to drilling bolt holes and shall remain in-place.

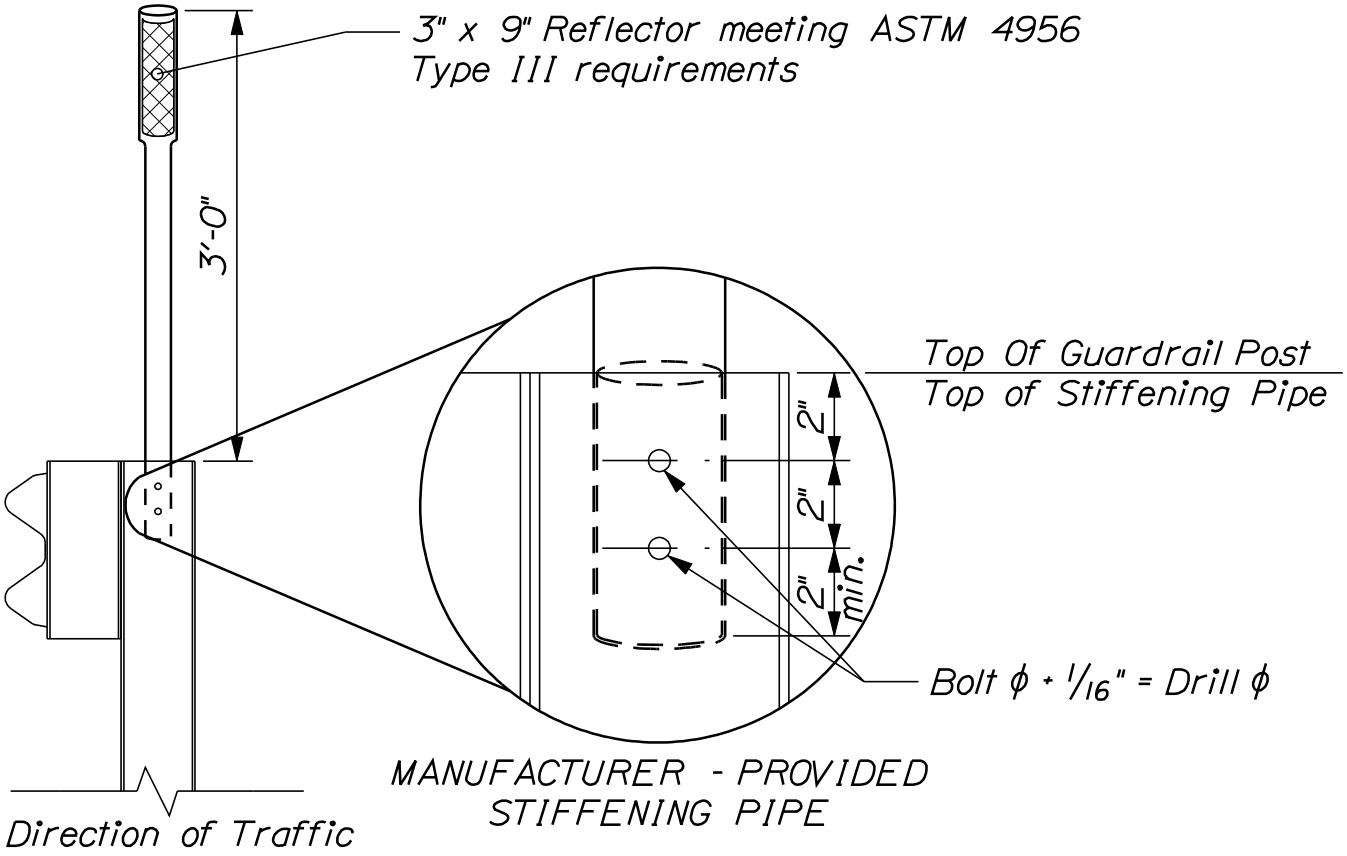

REFLECTORIZED FLEXIBLE GUARDRAIL MARKER DETAILS

606(34)

SPECIAL PROVISION
SECTION 606
GUARDRAIL
(Anchorage Assembly)

Description This work shall consist of furnishing and installing anchorage assemblies in accordance with current Standard Specifications and as shown in the attached details at the locations indicated on the plans.

Materials Materials shall meet the requirements specified in the following subsections of Division 700 - Materials:

Timber Preservative 708.05
Metal Beam Rail 710.04
Timber Posts 710.07
Guardrail Hardware 710.08

CONSTRUCTION REQUIREMENTS

Method of Measurement Anchorage assemblies will be measured by the unit (each) complete in place and will include all components shown on the attached details.

Basis of Payment The accepted quantity of anchorage assemblies will be paid for at the contract unit price per each, complete in place and will include all components shown on the attached details. Payment shall be full compensation for furnishing and installing all components as shown on the attached details and for incidentals necessary to complete the work.

Payment will be made under:

Pay Item		Pay Unit
606.259	Anchorage Assembly	Each

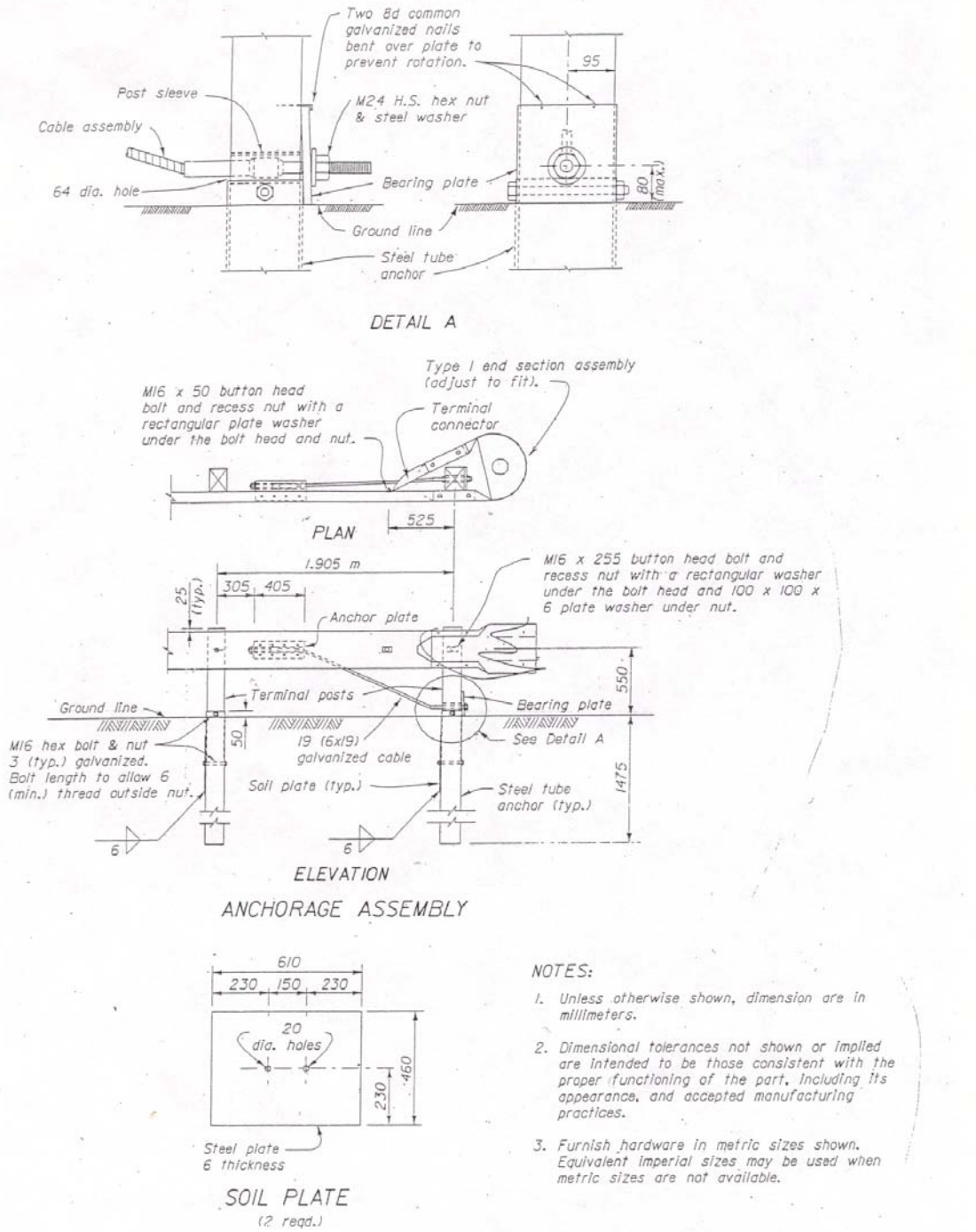

Anchorage Assembly

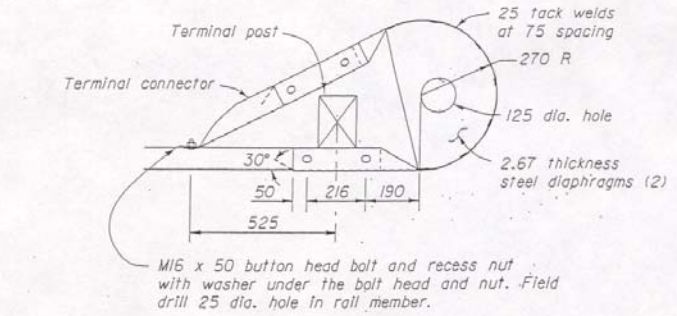

PLAN

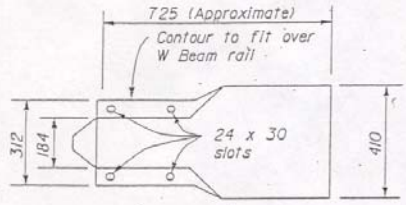

ELEVATION

TYPE I END SECTION ASSEMBLY

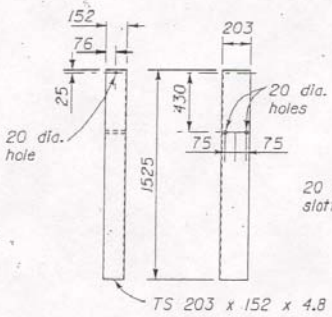

STEEL TUBE ANCHOR

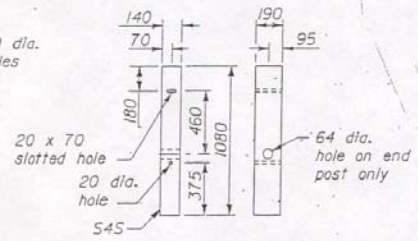

TERMINAL POST

GALVANIZED STANDARD PIPE POST SLEEVE

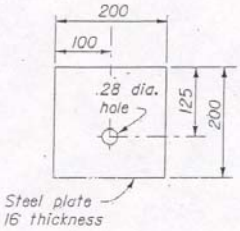

BEARING PLATE

Anchorage Assembly

SPECIAL PROVISION
SECTION 652
MAINTENANCE OF TRAFFIC
(Traffic Control)

Failure by the contractor to follow the Contracts 652 Special Provisions and Standard Specification and/or The Manual on Uniform Traffic Control Devices (MUTCD) and/or The Contractors own Traffic Control Plan will result in a violation letter and result in a reduction in payment as shown in the schedule below. The Departments Resident or any other representative of The Department reserves the right to suspend the work at any time and request a meeting to discuss violations and remedies. The Department shall not be held responsible for any delay in the work due to any suspension under this item. Any reduction in payment under this Special Provision will be in addition to forfeiting payment of maintenance of traffic control devices for that day.

ORIGINAL CONTRACT AMOUNT

from	Up to and	Amount of Penalty
More Than	**Including**	**Damages per Violation**
$0	$100,000	$250
$100,000	$300,000	$500
$300,000	$500,000	$750
$500,000	$1,000,000	$1,500
$1,000,000	$2,000,000	$2,500
$2,000,000	$4,000,000	$5,000
$4,000,000	and more	$10,000

April 17, 2007
Supersedes May 10, 2006

SPECIAL PROVISION
SECTION 652
MAINTENANCE OF TRAFFIC
Construction Sign Sheeting Material

Super high intensity fluorescent retroreflective sheeting, ASTM D 4956 - Type VII, Type VIII, or Type IX (prismatic), is required for all construction signs.

SPECIAL PROVISION
SECTION 652
MAINTENANCE OF TRAFFIC

Approaches Approach signing shall include the following signs as a minimum. Field conditions may warrant the use of additional signs as determined by the Resident.

Road Work Next x Miles
Road Work 500 Feet
End Road Work

Work Area At each work site, signs and channelizing devices shall be used as directed by the Resident. Signs include:

Road Work xxxx[1]
One Lane Road Ahead
Flagger Sign

Other typical signs include:

Be Prepared to Stop
Low Shoulder
Bump
Pavement Ends

The above lists of Approach signs and Work Area signs are representative of the contract requirements. Other sign legends may be required.

The Contractor shall conduct their operations in such a manner that the roadway will not be restricted to one lane for more than 800 m [2,500 ft] at each work area. Where more than one work area restricts traffic to one lane operation, these work areas shall be separated by at least 1.6 km [1 mile] of two way operation.

Temporary Centerline A temporary centerline shall be placed each day on all new pavement to be used by traffic. The temporary centerline, when specified of reflectorized traffic paint, shall conform to the standard marking patterns used for permanent markings.

Failure to apply a temporary centerline daily will result in suspension of paving until temporary markers are applied to all previously placed pavement.

[1] "Road Work Ahead" to be used in mobile operations and "Road Work xx ft" to be used in stationary operations as directed by the Resident.

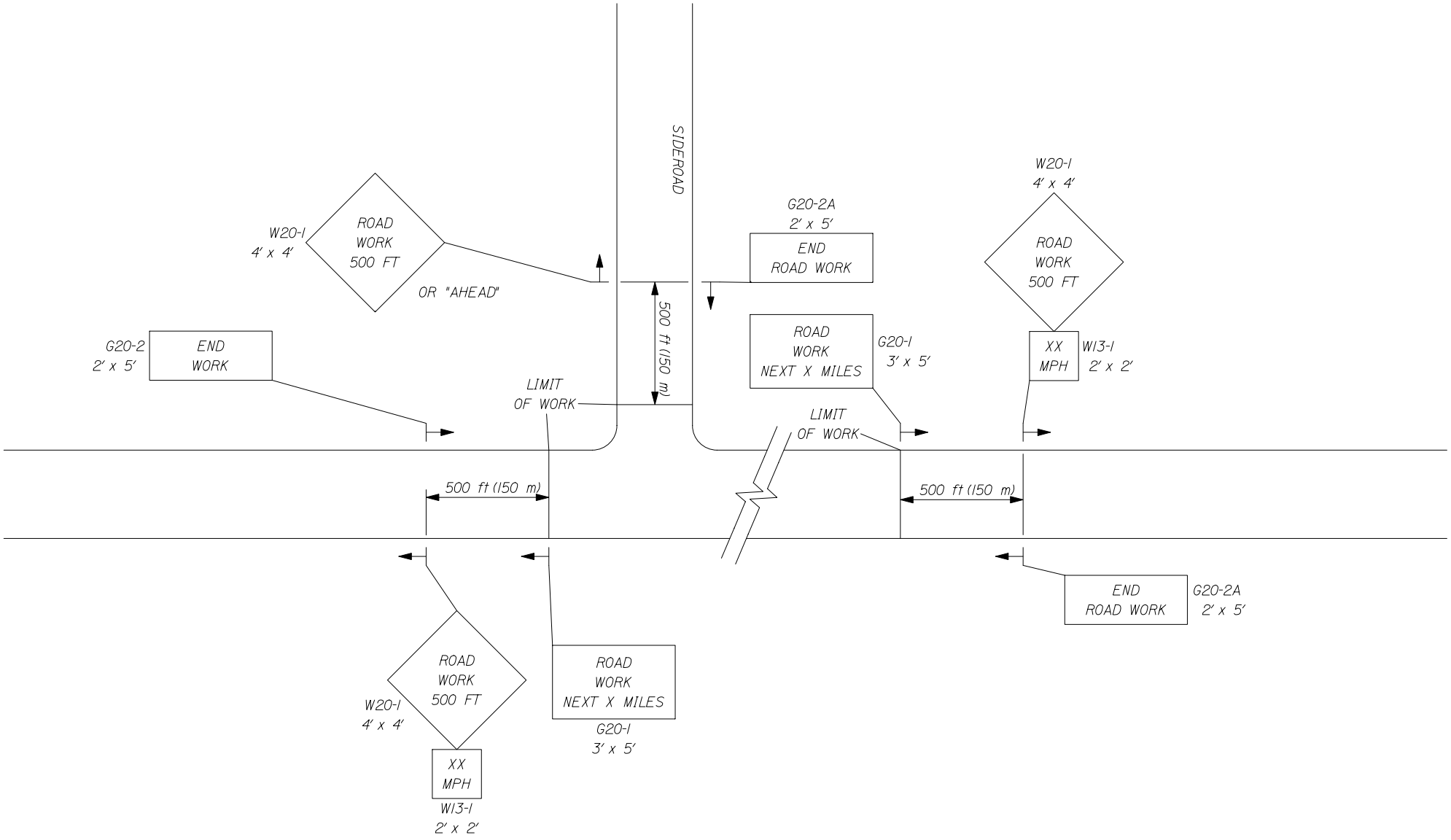

1 of 3

-- PROJECT APPROACH SIGNING --
TWO WAY TRAFFIC

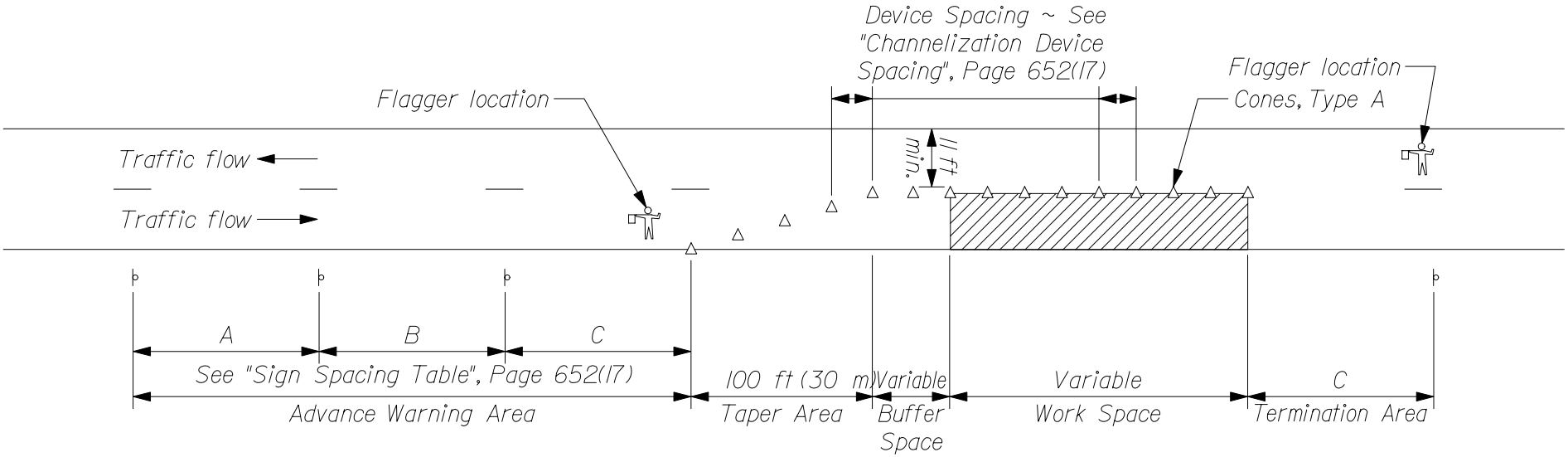

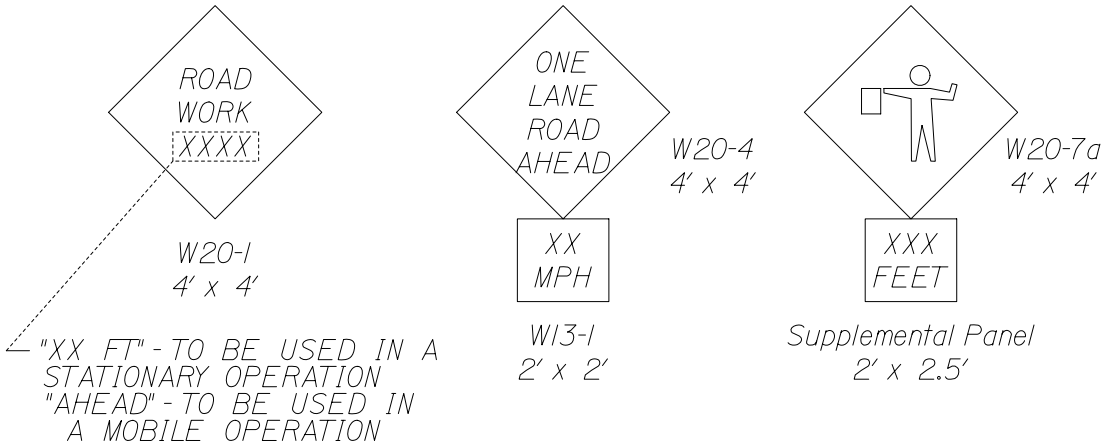

TYPICAL APPLICATION: TWO - WAY, TWO LANE ROADWAY, CLOSING ONE LANE USING FLAGGERS

TYPE OF TAPER	TAPER LENGTH (L)*
Merging Taper	at least L
Shifting Taper	at least 0.5L
Shoulder Taper	at least 0.33L
One-Lane, Two-Way Traffic Taper	100 ft (30 m) maximum
Downstream Taper	100 ft (30 m) per lane

* Formulas for L are as follows:

For speed limits of 40 mph (60 km/h) or less:

$L = \frac{WS^2}{60}$ $\quad (L = \frac{WS^2}{155})$

For speed limits of 45 mph (70 km/h) or greater:

$L = WS$ $\quad (L = \frac{WS}{1.6})$

* Formulas for L are as follows:

A minimum of 5 channelization devices shall be used in the taper.

CHANNELIZATION DEVICE SPACING

The spacing of channelization devices shall not exceed a distance equal to 1.0 times the speed limit in mph when used for taper channelization, and a distance in feet of 2.0 times the speed limit in mph when used for tangent channelization.

SIGN SPACING TABLE			
Road Type	Distance Between Signs**		
	A	B	C
Urban 30 mph (50 km/h) or less	100 (30)	100 (30)	100 (30)
Urban 35 mph (55 km/h) and greater	350 (100)	350 (100)	350 (100)
Rural	500 (150)	500 (150)	500 (150)
Expressway / Urban Parkway	2,640 (800)	1,500 (450)	1000 (300)

**Distances are shown in feet (meters).

GENERAL NOTES;

1. Final placement of signs and devices may be changed to fit field conditions as approved by the Resident.

SUGGESTED BUFFER ZONE LENGTHS

Speed (mph)	Length (feet)	Speed (mph)	Length (feet)
20	115	40	325
25	155	45	360
30	200	50	425
35	250	55	495

SPECIAL PROVISION
SECTION 656
Temporary Soil Erosion and Water Pollution Control

Standard Specification 656 of the Standard Specifications is deleted and replaced by this Special Provision.

The following information and requirements will constitute the Soil Erosion and Water Pollution Control Plan for this Project. The soil erosion and water pollution control measures associated with this work are as follows:

The following is added to Section 656 regarding Project Specific Information and Requirements. All references to the Maine Department of Transportation Best Management Practices for Erosion and Sedimentation Control (a.k.a. Best Management Practices manual or BMP Manual) are a reference to the latest revision of said manual. The latest version is dated "February 2008" and is available at;

http://www.maine.gov/mdot/environmental-office-homepage/surface-water-resources.php

Project Specific Information and Requirements

The following information and requirements apply specifically to this Project. The temporary soil erosion and water pollution control measures associated with this work shall be addressed in the SEWPCP.

Project Specific Information and Requirements

The following information and requirements apply specifically to this Project. The temporary soil erosion and water pollution control measures associated with this work shall be addressed in the SEWPCP.

1) This project is in the St. Croix River watershed. Which is listed as a Class A water body and is considered SENSITIVE in accordance with the BMP Manual. The Contractor's SEWPCP shall comply with Section II.B., Guidelines for Sensitive Water bodies in the BMP Manual.

2) Newly disturbed earth shall be mulched by the end of each workday. Mulch shall be maintained on a daily basis.

3) If **water is flowing within the drainage system, the water shall be diverted to a stable area or conduit and work shall be conducted in the dry.** The Contractor's plan shall address when and where the diversions will be necessary.

4) Dust control items other than those under *Standard Specification, Section 637 – Dust Control*, if applicable, shall be included in the plan.

SPECIAL PROVISION
SECTION 656
Temporary Soil Erosion and Water Pollution Control

5) Permanent slope stabilization measures shall be applied within one week of the last soil disturbance.

6) Permanent seeding shall be done in accordance with *Standard Specification, Section 618 - Seeding* unless the Contract states otherwise.

7) Culvert inlet and outlet protection shall be installed within 48 hours of culvert installation, or prior to a storm event, whichever is sooner.

8) **DRAINAGE WORK SHALL NOT COMMENCE UNTIL AFTER APRIL 1ST OF ANY YEAR DUE TO HIGH GROUNDWATER LEVELS AND NUMEROUS INTERMITTENT STREAMS.** This date shall only be adjustable upon approval of both the Construction Manager and a representative from the Water Resources Unit.

9) All disturbed ditches shall be stabilized by the end of each workday. Stabilization shall be maintained on a daily basis.

10) Erosion control blanket shall be installed in the bottoms of all ditches except where a stone lining is planned. Seed shall be applied prior to the placement of the blanket.

11) If check dams are used, they shall be constructed of stone in accordance with BMP Manual, Section

12) After November 1 the Contractor shall use winter stabilization methods, such as Erosion Control Mix as specified in *Standard Specification, Section 619 - Mulch*. If required, spring procedures for permanent stabilization shall also be described in the plan. Use of this product for over-winter temporary erosion control will be incidental to the contract and be paid for as part of Pay Item 656.75.

13)The SEWPCP shall describe the containment method for removal of the existing abutments, including installation of cofferdams and dewatering procedures.

SPECIAL PROVISION
SECTION 656
Temporary Soil Erosion and Water Pollution Control

A cofferdam sedimentation basin is required if cofferdams are used. The basin shall be located in an upland area where the water can settle and seep into the ground or be released slowly to the resource in a manner that will not cause erosion. The location of such a cofferdam sedimentation basin shall be addressed in the SEWPCP.

OR

If a cofferdam sedimentation basin is used, it shall be located in an upland area where the water can settle and sink into the ground or be released slowly to the resource in a manner that will not cause erosion. The location of such a cofferdam sedimentation basin shall be addressed in the SEWPCP.

Freshwater

Prior to release to a natural resource, any impounded water that has been in contact with concrete placed during construction must have a pH between 6.0 and 8.5, must be within one pH unit of the background pH level of the resource and shall have turbidity no greater than the receiving resource. This requirement is applicable to concrete that is placed or spilled (including leakage from forms) as well as indirect contact via tools or equipment. Water not meeting release criteria shall be addressed in the SEWPCP. Discharging impounded water to the stream must take place in a manner that does not disturb the stream bottom or cause erosion.

STANDARD DETAIL UPDATES

Standard Details and Standard Detail updates are available at:
http://www.maine.gov/mdot/contractor-consultant-information/ss_standard_details_updates.php

Detail #	Description	Revision Date
504(15)	Diaphragms	12/30/02
507(04)	Steel Bridge Railing	2/05/03
526(33)	Concrete Transition Barrier	8/18/03
645(06)	H-Beam Posts – Highway Signing	7/21/04
645(09)	Installation of Type II Signs	7/21/04
626(09)	Electrical Junction Box for Traffic Signals and Lighting	2/25/05
604(01)	Catch Basins	11/16/05
604(05)	Type “A” & “B” Catch Basin Tops	11/16/05
604(06)	Type “C” Catch Basin Tops	11/16/05
604(07)	Manhole Top “D”	11/16/05
604(09)	Catch Basin Type “E”	11/16/05
606(02)	Multiple Mailbox Support	11/16/05
606(07)	Reflectorized Beam Guardrail Delineator Details	11/16/05
609(06)	Vertical Bridge Curb	11/16/05
504(23)	Hand-Hold Details	12/08/05
609(03)	Curb Type 3	6/27/06
609(07)	Curb Type 1	6/27/06
535(01)	Precast Superstructure - Shear Key	10/12/06
535(02)	Precast Superstructure - Curb Key & Drip Notch	10/12/06
535(03)	Precast Superstructure - Shear Key	10/12/06

535(04)	Precast Superstructure - Shear Key	10/12/06
535(05)	Precast Superstructure - Post Tensioning	10/12/06
535(06)	Precast Superstructure - Sections	10/12/06
535(07)	Precast Superstructure - Precast Slab & Box	10/12/06
535(08)	Precast Superstructure - Sections	10/12/06
535(09)	Precast Superstructure - Sections	10/12/06
535(10)	Precast Superstructure - Sections	10/12/06
535(11)	Precast Superstructure - Sections	10/12/06
535(12)	Precast Superstructure - Sections	10/12/06
535(13)	Precast Superstructure - Sections	10/12/06
535(14)	Precast Superstructure - Stirrups	10/12/06
535(15)	Precast Superstructure - Plan	10/12/06
535(16)	Precast Superstructure - Reinforcing	10/12/06
535(17)	Precast Superstructure - Notes	10/12/06
801(01)	Drives on Sidewalk Sections	2/06/07
801(02)	Drives on Non-Sidewalk Sections	2/06/07
535(03)	Precast Superstructure - Shear Key	12/5/07
535(04)	Precast Superstructure - Shear Key	12/5/07
535(05)	Precast Superstructure - Post Tensioning	12/5/07
535(17)	Precast Superstructure - Notes	12/5/07
801(01)	Drives on Sidewalk Sections	1/04/08
801(02)	Drives on Non-Sidewalk Sections	1/04/08
203(03)	Backslope Rounding	1/29/08
535(02)	Precast Superstructure - Curb Key & Drip Notch	5/20/08

535(05)	Precast Superstructure - Post Tensioning	5/20/08
502(03)	Concrete Curb - Bituminous Wearing Surface	2/2/09
502(03)A	Concrete Curb - Concrete Wearing Surface	2/2/09
502(07)	Precast Concrete Deck Panels - Layout Plan	2/2/09
502(07)A	Precast Concrete Deck Panels - Layout Plan	2/2/09
502(08)	Precast Concrete Deck Panels - Panel Plan	2/2/09
502(09)	Precast Concrete Deck Panels - Blocking Detail	2/2/09
502(10)	Precast Concrete Deck Panels	2/2/09
502(11)	Precast Concrete Deck Panels	2/2/09
502(12)	Precast Concrete Deck Panels - Notes	2/2/09
502(12)A	Precast Concrete Deck Panels - Notes	2/2/09
526(06)	Permanent Concrete Barrier	2/2/09
526(08)	Permanent Concrete Barrier – Type IIIA	2/2/09
526(08)A	Permanent Concrete Barrier – Type IIIA	2/2/09
526(13)	Permanent Concrete Barrier – Type IIIB	2/2/09
526(14)	Permanent Concrete Barrier – Type IIIB	2/2/09
526(21)	Concrete Transition Barrier	2/2/09
526(39)	Texas Classic Rail – Between Window	2/2/09
526(40)	Texas Classic Rail – Through Window	2/2/09
526(41)	Texas Classic Rail – Through Post	2/2/09
526(42)	Texas Classic Rail – Through Nose	2/2/09
606(20)	Guardrail - Type 3 - Single Rail - Bridge Mounted	2/2/09
606(21)	Guardrail - Type 3 - Single Rail - Bridge Mounted	2/2/09
606(22)	Guardrail - Type 3 - Single Rail - Bridge Mounted	2/2/09

606(23)	Guardrail - Type 3 - Single Rail - Bridge Mounted	2/2/09
609(06)	Vertical Bridge Curb	2/2/09
609(08)	Precast Concrete Transition Curb	2/2/09

SUPPLEMENTAL SPECIFICATION

(Corrections, Additions, & Revisions to Standard Specifications - Revision of December 2002)

SECTION 101
CONTRACT INTERPRETATION

101.2 Definitions

Closeout Documentation Replace the sentence "A letter stating the amount….. DBE goals." with "DBE Goal Attainment Verification Form"

Add "Environmental Information Hazardous waste assessments, dredge material test results, boring logs, geophysical studies, and other records and reports of the environmental conditions. For a related provision, see Section 104.3.14 - Interpretation and Interpolation."

Add "Fabrication Engineer The Department's representative responsible for Quality Assurance of pre-fabricated products that are produced off-site."

Geotechnical Information Replace with the following: "Boring logs, soil reports, geotechnical design reports, ground penetrating radar evaluations, seismic refraction studies, and other records of subsurface conditions. For a related provision, see Section 104.3.14 - Interpretation and Interpolation."

SECTION 102
DELIVERY OF BIDS

102.7.1 Location and Time Add the following sentence "As a minimum, the Bidder will submit a Bid Package consisting of the Notice to Contractors, the completed Acknowledgement of Bid Amendments form, the completed Schedule of Items, 2 copies of the completed Agreement, Offer, & Award form, a Bid Bond or Bid Guarantee, and any other Certifications or Bid Requirements listed in the Bid Book."

102.11.1 Non-curable Bid Defects Replace E. with "E. The unit price and bid amount is not provided or a lump sum price is not provided or is illegible as determined by the Department."

SECTION 103
AWARD AND CONTRACTING

103.3.1 Notice and Information Gathering Change the first paragraph to read as follows: "After Bid Opening and as a condition for Award of a Contract, the Department may require an Apparent Successful Bidder to demonstrate to the Department's satisfaction that the Bidder is responsible and qualified to perform the Work."

SECTION 104
GENERAL RIGHTS AND RESPONSIBILITIES

104.3.14 Interpretation and Interpolation In the first sentence, change "…and Geotechnical Information." to "…Environmental Information, and Geotechnical Information."
Delete the entire Section 104.5.9 and replace with the following:

"104.5.9 Landscape Subcontractors The Contractor shall retain only Landscape Subcontractors that are certified by the Department's Environmental Office Landscape Unit."

SECTION 105
GENERAL SCOPE OF WORK

Delete the entire Section 105.6 and replace with the following:

105.6.1 Department Provided Services The Department will provide the Contractor with the description and coordinates of vertical and horizontal control points, set by the Department, within the Project Limits, for full construction Projects and other Projects where survey control is necessary. For Projects of 1,500 feet in length, or less: The Department will provide three points. For Projects between 1,500 and 5,000 feet in length: The Department will provide one set of two points at each end of the Project. For Projects in excess of 5,000 feet in length, the Department will provide one set of two points at each end of the Project, plus one additional set of two points for each mile of Project length. For non-full construction Projects and other Projects where survey control is not necessary, the Department will not set any control points and, therefore, will not provide description and coordinates of any control points. Upon request of the Contractor, the Department will provide the Department's survey data management software and Survey Manual to the Contractor, or its survey Subcontractor, for the exclusive use on the Department's Projects.

105.6.2 Contractor Provided Services Utilizing the survey information and points provided by the Department, described in Subsection 105.6.1, Department Provided Services, the Contractor shall provide all additional survey layout necessary to complete the Work. This may include, but not be limited to, reestablishing all points provided by the Department, establishing additional control points, running axis lines, providing layout and maintenance of all other lines, grades, or points, and survey quality control to ensure conformance with the Contract. The Contractor is also responsible for providing construction centerline, or close reference points, for all Utility Facilities relocations and adjustments as necessary to complete the Work. When the Work is to connect with existing Structures, the Contractor shall verify all dimensions before proceeding with the Work. The Contractor shall employ or retain competent engineering and/or surveying personnel to fulfill these responsibilities.

The Contractor must notify the Department of any errors or inconsistencies regarding the data and layout provided by the Department as provided by Section 104.3.3 - Duty to Notify Department If Ambiguities Discovered.

105.6.2.1 Survey Quality Control The Contractor is responsible for all construction survey quality control. Construction survey quality control is generally defined as, first, performing initial field survey layout of the Work and, second, performing an independent check of the initial layout using independent survey data to assure the accuracy of the initial layout; additional iterations of checks may be required if significant discrepancies are discovered in this process. Construction survey layout quality control also requires written documentation of the layout process such that the process can be followed and repeated, if necessary, by an independent survey crew.

105.6.3 Survey Quality Assurance It is the Department's prerogative to perform construction survey quality assurance. Construction survey quality assurance may, or may not, be performed by the Department. Construction survey quality assurance is generally defined as an independent check of the construction survey quality control. The construction survey quality assurance process may involve physically checking the Contractor's construction survey layout using independent survey data, or may simply involve reviewing the construction survey quality control written documentation. If the Department elects to physically check the Contractor's survey layout, the Contractor's designated surveyor may be required to be present. The Department will provide a minimum notice of 48 hours to the Contractor, whenever possible, if the Contractor's designated surveyor's presence is required. Any errors discovered through the quality assurance process shall be corrected by the Contractor, at no additional cost to the Department.

105.6.4 Boundary Markers The Contractor shall preserve and protect from damage all monuments or other points that mark the boundaries of the Right-of-Way or abutting parcels that are outside the area that must be disturbed to perform the Work. The Contractor indemnifies and holds harmless the Department from all claims to reestablish the former location of all such monuments or points including claims arising from 14 MRSA § 7554-A. For a related provision, see Section 104.3.11 - Responsibility for Property of Others.

SECTION 106
QUALITY

106.4.3 Testing Change the first sentence in paragraph three from "…maintain records of all inspections and tests." to "…maintain original documentation of all inspections, tests, and calculations used to generate reports."

106.6 Acceptance Add the following to paragraph 1 of A: "This includes Sections 401 - Hot Mix Asphalt, 402 - Pavement Smoothness, and 502 - Structural Concrete - Method A - Air Content."

Add the following to the beginning of paragraph 3 of A: "For pay factors based on Quality Level Analysis, and"

106.7.1 Standard Deviation Method Add the following to F: "Note: In cases where the mean of the values is equal to either the USL or the LSL, then the PWL will be 50 regardless of the computed value of s."

Add the following to H: "Method C Hot Mix Asphalt: PF = [55 + (Quality Level *0.5)] * 0.01"

SECTION 107
TIME

107.3.1 General Add the following: "If a Holiday occurs on a Sunday, the following Monday shall be considered a Holiday. Sunday or Holiday work must be approved by the Department, except that the Contractor may work on Martin Luther King Day, President's Day, Patriot's Day, the Friday after Thanksgiving, and Columbus Day without the Department's approval."

107.7.2 Schedule of Liquidated Damages Replace the table of Liquidated Damages as follows:

From More Than	Up to and Including	Amount of Liquidated Damages per Calendar Day
$0	$100,000	$100
$100,000	$300,000	$200
$300,000	$500,000	$400
$500,000	$1,000,000	$575
$1,000,000	$2,000,000	$750
$2,000,000	$4,000,000	$900
$4,000,000	and more	$1,875

SECTION 108
PAYMENT

108.4 Payment for Materials Obtained and Stored First paragraph, second sentence, delete the words "…Delivered on or near the Work site at acceptable storage places."

SECTION 109
CHANGES

109.1.1 Changes Permitted Add the following to the end of the paragraph: "There will be no adjustment to Contract Time due to an increase or decrease in quantities, compared to those estimated, except as addressed through Contract Modification(s)."

109.1.2 Substantial Changes to Major Items Add the following to the end of the paragraph: "Contract Time adjustments may be made for substantial changes to Major Items when the change affects the Critical Path, as determined by the Department"

109.4.4 Investigation / Adjustment Third sentence, delete the words "subsections (A) - (E)"

109.5.1 Definitions - Types of Delays

B. Compensable Delay Replace (1) with the following; "a weather related Uncontrollable Event of such an unusually severe nature that a Federal Emergency Disaster is declared. The Contractor will only be entitled to an Equitable Adjustment if the Project falls within the geographic boundaries prescribed under the disaster declaration."

109.7.2 Basis of Payment Replace with the following: "Equitable Adjustments will be established by mutual Agreement for compensable items listed in Section 109.7.3-Compensable Items, based upon Unit or Lump Sum Prices. If Agreement cannot be reached, the Contractor shall accept payment on a Force Account basis as provided in Section 109.7.5 - Force Account Work, as full and complete compensation for all Work relating to the Equitable Adjustment."

109.7.3 Compensable Items Replace with the following: "The Contractor is entitled to compensation for the following items, with respect to agreed upon Unit or Lump Sum Prices:

1. Labor expenses for non-salaried Workers and salaried foremen.

2. Costs for Materials.

3. A 15 % markup on the totals of Items 1 and 2 of this subsection 109.7.3 for home office overhead and profit of the Contractor, its Subcontractors and suppliers, and any lower tier Subcontractors or suppliers, with no mark-ups on mark-ups.

4. Cost for Equipment, based on Blue Book Rates or leased rates, as set forth in Section 109.7.5(C), or the Contractor's Actual Costs if determined by the Department to be lower.

5. Time.

6. Subcontractor quoted Work, as set forth below in Section 109.7.5 (F)."

109.7.5 Force Account Work

C. Equipment

Paragraph 2, delete sentence 1 which starts; "Equipment leased…."

Paragraph 6, change sentence 2 from "The Contractor may furnish…" to read "If requested by the Department, the Contractor will produce cost data to assist the Department in the establishment of such rental rate, including all records that are relevant to the Actual Costs including rental Receipts, acquisition costs, financing documents, lease Agreements, and maintenance and operational cost records."
Add the following paragraph; "Equipment leased by the Contractor for Force Account Work and actually used on the Project will be paid for at the actual invoice amount plus 10% markup for administrative costs."

Add the following section;

"F. Subcontractor Work When accomplishing Force Account Work that utilizes Subcontractors, the Contractor will be allowed a maximum markup of 5% for profit and overhead on the Subcontractor's portion of the Force Account Work."

SECTION 110
INDEMNIFICATION, BONDING, AND INSURANCE

Delete the entire Section 110.2.3 and replace with the following:

110.2.3 Bonding for Landscape Establishment Period The Contractor shall provide a signed, valid, and enforceable Performance, Warranty, or Maintenance Bond complying with the Contract, to the Department at Final Acceptance.

The bond shall be in the full amount for all Pay Items for work pursuant to Sec 621, Landscape, payable to the "Treasurer - State of Maine," and on the Department's forms, on exact copies thereof, or on forms that do not contain any significant variations from the Department's forms as solely determined by the Department.

The Contractor shall pay all premiums and take all other actions necessary to keep said bond in effect for the duration of the Landscape Establishment Period described in Special Provision 621.0036 - Establishment Period. If the Surety becomes financially insolvent, ceases to be licensed or approved to do business in the State of Maine, or stops operating in the United States, the Contractor shall file new bonds complying with this Section within 10 Days of the date the Contractor is notified or becomes aware of such change.

All Bonds shall be procured from a company organized and operating in the United States, licensed or approved to do business in the State of Maine by the State of Maine Department of Business Regulation, Bureau of Insurance, and listed on the latest Federal Department of the Treasury listing for "Companies Holding Certificates of Authority as Acceptable Sureties on Federal Bonds and as Acceptable Reinsuring Companies."

By issuing a bond, the Surety agrees to be bound by all terms of the Contract, including those related to payment, time for performance, quality, warranties, and the Department's self-help remedy provided in Section 112.1 - Default to the same extent as if all terms of the Contract are contained in the bond(s).

Regarding claims related to any obligations covered by the bond, the Surety shall provide, within 60 Days of Receipt of written notice thereof, full payment of the entire claim or written notice of all bases upon which it is denying or contesting payment. Failure of the Surety to provide such notice within the 60-day period constitutes the Surety's waiver of any right to deny or contest payment and the Surety's acknowledgment that the claim is valid and undisputed.

SECTION 202
REMOVING STRUCTURES AND OBSTRUCTIONS

202.02 Removing Buildings Make the following change to the last sentence in the final paragraph, change "…Code of Maine Regulations 401." to "…Department of Environmental Protection Maine Solid Waste Management Rules, 06-096 CMR Ch. 401, Landfill Siting, Design and Operation."

SECTION 203
EXCAVATION AND EMBANKMENT

203.01 Description Under b. Rock Excavation; add the following sentence: "The use of perchlorate is not allowed in blasting operations."

Delete the entire Section 203.041 and replace with the following:
"203.041 Salvage of Existing Hot Mix Asphalt Pavement All existing hot mix asphalt pavement designated to be removed under this contract must be salvaged for utilization.

Existing hot mix asphalt pavement material shall not be deposited in any waste area or be placed below subgrade in any embankment.

Methods of utilization may be any of the following:

1. Used as a replacement for untreated aggregate surface course on entrances provided the material contains no particles greater than 50 mm [2 in] in any dimension. Payment will be made under Pay Item 411.09, Untreated Aggregate Surface Course or 411.10, Untreated Aggregate Surface Course, Truck Measure. Material shall be placed, shaped, compacted and stabilized as directed by the Resident.

2. Stockpiled at commercial or approved sites for commercial or MaineDOT use.

3. Other approved methods proposed by the Contractor, and approved by the Resident which will assure proper use of the existing hot mix asphalt pavement.

The cost of salvaging hot mix asphalt material will be included for payment under the applicable pay item, with no additional allowances made, which will be full compensation for removing, temporarily stockpiling, and rehandling, if necessary, and utilizing the material in entrances or other approved uses, or stockpiling at an approved site as described above. The material will also be measured and paid for under the applicable Pay Item if it is reused for aggregate in entrances, or other approved uses."

SECTION 502
STRUCTURAL CONCRETE

502.05 Composition and Proportioning; TABLE #1; NOTE #2; third sentence; Change "…alcohol based saline sealer…" to "alcohol based silane sealer…". Add NOTE #6 to Class S Concrete.

502.0502 Quality Assurance Method A - Rejection by Resident Change the first sentence to read: "For an individual sublot with test results failing to meet the criteria in Table #1, or if the calculated pay factor for Air Content is less than 0.80……"

502.0503 Quality Assurance Method B - Rejection by Resident Change the first sentence to read: "For material represented by a verification test with test results failing to meet the criteria in Table #1, the Department will……"

502.0505 Resolution of Disputed Acceptance Test Results Combine the second and third sentence to read: "Circumstances may arise, however, where the Department may ……"
502.10 Forms and False work

D. Removal of Forms and False work 1., First paragraph; first, second, and third sentence; replace "forms" with "forms and false work"

502.11 Placing Concrete

G. Concrete Wearing Surface and Structural Slabs on Precast Superstructures Last paragraph; third sentence; replace "The temperature of the concrete shall not exceed 24° C [75° F} at the time of placement." with "The temperature of the concrete shall not exceed 24° C [75° F} at the time the concrete is placed in its final position."

502.15 Curing Concrete First paragraph; replace the first sentence with the following; "All concrete surfaces shall be kept wet with clean, fresh water for a curing period of at least 7 days after concrete placing, with the exception of vertical surfaces as provided for in Section 502.10 (D) - Removal of Forms and False work."

Second paragraph; delete the first two sentences.

Third paragraph; delete the entire paragraph which starts "When the ambient temperature…."

Fourth paragraph; delete "approved" to now read "…continuously wet for the entire curing period…"

Fifth paragraph; second sentence; change "…as soon as it is possible to do so without damaging the concrete surface." to "…as soon as possible."

Seventh paragraph; first sentence; change "…until the end of the curing period." to "…until the end of the curing period, except as provided for in Section 502.10(D) - Removal of Forms and False work."
502.19 Basis of Payment First paragraph, second sentence; add "pier nose armor" to the list of items included in the contract price for concrete.

SECTION 503
REINFORCING STEEL

503.06 Placing and Fastening Change the second paragraph, first sentence from: "All tack welding shall be done in accordance with Section 504, Structural Steel." to "All tack welding shall be done in accordance with AWS D1.4 Structural Welding Code - Reinforcing Steel."

SECTION 504
STRUCTURAL STEEL

504.09 Facilities for Inspection Add the follow as the last paragraph: "Failure to comply with the above requirements will be consider to be a denial to allow access to work by the Contractor. The Department will reject any work done when access for inspection is denied."

504.18 Plates for Fabricated Members Change the second paragraph, first sentence from: "…ASTM A 898/A 898 M…" to "…ASTM A 898/A 898 M or ASTM A 435/A 435 M as applicable and…"

504.31 Shop Assembly Add the following as the last sentence: "The minimum assembly length shall include bearing centerlines of at least two substructure units."

504.64 Non Destructive Testing-Ancillary Bridge Products and Support Structures Change the third paragraph, first sentence from "One hundred percent…" to "Twenty five percent…"

SECTION 535
PRECAST, PRESTRESSED CONCRETE SUPERSTRUCTURE

535.02 Materials Change "Steel Strand for Concrete Reinforcement" to "Steel Strand." Add the following to the beginning of the third paragraph; "Concrete shall be Class P conforming to the requirements in this section. 28 day compressive strength shall be as stated on the plans. Coarse aggregate…."

535.05 Inspection Facilities Add the follow as the last paragraph: "If the above requirements are not met, the Contractor shall be considered to be in violation of Standard Specification 104.2.5 – Right to Inspect Work. All work occurring during a violation of this specification will be rejected."

535.26 Lateral Post-Tensioning Replace the first paragraph; "A final tension…" with "Overstressing strands for setting losses cannot be accomplished for chuck to chuck lengths of 7.6 m [25 ft] and less. In such instances, refer to the Plans for all materials and methods. Otherwise, post-tensioning shall be in accordance with PCI standards and shall provide the anchorage force noted in the Plans. The applied jacking force shall be no less than 100% of the design jacking force."

SECTION 603
PIPE CULVERTS AND STORM DRAINS

603.0311 Corrugated Polyethylene Pipe for Option III Replace the Minimum Mandrel Diameter Table with the following:

Nominal Size US Customary (in)	Minimum Mandrel Diameter (in)	Nominal Size Metric (mm)	Minimum Mandrel Diameter (mm)
12	11.23	300	280.73
15	14.04	375	350.91
18	16.84	450	421.09
24	22.46	600	561.45
30	28.07	750	701.81
36	33.69	900	842.18
42	39.30	1050	982.54
48	44.92	1200	1122.90

SECTION 604
MANHOLES, INLETS, AND CATCH BASINS

604.02 Materials Add the following:

"Tops and Traps	712.07
Corrugated Metal Units	712.08
Catch Basin and Manhole Steps	712.09"

SECTION 605
UNDERDRAINS

605.05 Underdrain Outlets Make the following change:

In the first paragraph, second sentence, delete the words "metal pipe".

SECTION 606
GUARDRAIL

606.02 Materials Delete the entire paragraph which reads "The sole patented supplier of multiple mailbox…." and replace with "Acceptable multiple mailbox assemblies shall be listed on the Department's Approved Products List and shall be NCHRP 350 tested and approved."
Delete the entire paragraph which reads "Retroreflective beam guardrail delineators…." and replace with "Reflectorized sheeting for Guardrail Delineators shall meet the requirements of Section 719.01 - Reflective Sheeting. Delineators shall be fabricated from high-impact, ultraviolet and weather resistant thermoplastic.

606.09 Basis of Payment First paragraph; delete the second and third sentence in their entirety and replace with "Butterfly-type guardrail reflectorized delineators shall be mounted on all W-beam guardrail at an interval of every 10 posts [62.5 ft] on tangents sections and every 5 posts [31.25 ft] on curved sections as directed by the Resident. On divided highways, the delineators shall be yellow on the left hand side and silver/white on the right hand side. On two-way roadways, the delineators shall be silver/white on the right hand side. All delineators shall have retroreflective sheeting applied to only the traffic facing side. Reflectorized guardrail delineators will not be paid for directly, but will be considered incidental to the guardrail items."

SECTION 609
CURB

609.04 Bituminous Curb f., Delete the requirement "Color Natural (White)"

SECTION 610
STONE FILL, RIPRAP, STONE BLANKET, AND STONE DITCH PROTECTION

Add the following paragraph to Section 610.02:
"Materials shall meet the requirements of the following Sections of Special Provision 703:

Stone Fill	703.25
Plain and Hand Laid Riprap	703.26
Stone Blanket	703.27
Heavy Riprap	703.28
Definitions	703.32"

Add the following paragraph to Section 610.032.a.

"Stone fill and stone blanket shall be placed on the slope in a well-knit, compact and uniform layer. The surface stones shall be chinked with smaller stone from the same source."

Add the following paragraph to Section 610.032.b:
"Riprap shall be placed on the slope in a well-knit, compact and uniform layer. The surface stones shall be chinked with smaller stone from the same source."

Add the following to Section 610.032:
"Section 610.032.d. The grading of riprap, stone fill, stone blanket and stone ditch protection shall be determined by the Resident by visual inspection of the load before it is dumped into place, or, if ordered by the Resident, by dumping individual loads on a flat surface and sorting and measuring the individual rocks contained in the load. A separate, reference pile of stone with the required gradation will be placed by the Contractor at a convenient location where the Resident can see and judge by eye the suitability of the rock being placed during the duration of the project. The Resident reserves the right to reject stone at the job site or stockpile, and in place. Stone rejected at the job site or in place shall be removed from the site at no additional cost to the Department."

SECTION 615
LOAM

615.02 Materials Make the following change:

Organic Content	Percent by Volume
Humus	"5% - 10%", as determined by Ignition Test

SECTION 618
SEEDING

618.01 Description Change the first sentence to read as follows: "This work shall consist of furnishing and applying seed ….." Also remove ",and cellulose fiber mulch" from 618.01(a).
618.03 Rates of Application In 618.03(a), remove the last sentence and replace with the following: "These rates shall apply to Seeding Method 2, 3, and Crown Vetch."

In 618.03(c) "1.8 kg [4 lb]/unit." to "1.95 kg [4 lb]/unit."

618.09 Construction Method In 618.09(a) 1, sentence two, replace "100 mm [4 in]" with "25 mm [1 in] (Method 1 areas) and 50 mm [2 in] (Method 2 areas)"

618.15 Temporary Seeding Change the Pay Unit from Unit to Kg [lb].

SECTION 620
GEOTEXTILES

620.03 Placement Section (c)

Title: Replace "Non-woven" in title with "Erosion Control".
First Paragraph: Replace first word "Non-woven" with "Woven monofilament".
Second Paragraph: Replace second word "Non-woven" with "Erosion Control".

620.07 Shipment, Storage, Protection and Repair of Fabric Section (a)

Replace the second sentence with the following: "Damaged geotextiles, as identified by the Resident, shall be repaired immediately."

620.09 Basis of Payment

Pay Item 620.58: Replace "Non-woven" with "Erosion Control"
Pay Item 620.59: Replace "Non-woven" with "Erosion Control"

SECTION 621
LANDSCAPING

621.0036 Establishment Period In paragraph 4 and 5, change "time of Final Acceptance" to "end of the period of establishment". In Paragraph 7, change "Final Acceptance date" to ""end of the period of establishment" and change "date of Final Acceptance" to "end of the period of establishment".

SECTION 626
HIGHWAY SIGNING

626.034 Concrete Foundations Add to the following to the end of the second paragraph: "Pre-cast and cast-in-place foundations shall be warranteed against leaning and corrosion for two years after the project is completed. If the lean is greater than 2 degrees from normal or the foundation is spalling within the first two years, the Contractor shall replace the foundation at no extra cost."

SECTION 627
PAVEMENT MARKINGS

627.10 Basis of Payment Add to the following to the end of the third paragraph: "If allowed by Special Provision, the Contractor may utilize Temporary Bi-Directional Yellow and White(As required) Delineators as temporary pavement marking lines and paid for at the contract lump sum price. Such payment will include as many applications as required and removal."

SECTION 637
DUST CONTROL

637.06 Basis of Payment Add the following after the second sentence of the third paragraph: "Failure by the Contractor to follow Standard Specification or Special Provision - Section 637 and/or the Contractor's own Soil Erosion and Pollution Control Plan concerning Dust Control and/or the Contractor's own Traffic Control Plan concerning Dust Control and/or visible evidence of excessive dust problems, as determined by the Resident, will result in a reduction in payment, computed by reducing the Lump Sum Total by 5% per occurrence per day. The Department's Resident or any other representative of the Department reserves the right to suspend the work at any time and request a meeting to discuss violations and remedies. The Department shall not be held responsible for any delay in the work due to any suspension under this item. Additional penalties may also be assessed in accordance with Special

Provision 652 - Work Zone Traffic Control and Standard Specification 656 - Temporary Soil Erosion and Water Pollution Control."

SECTION 639
ENGINEERING FACILITIES

639.04 Field Offices Change the forth to last paragraph from: "The Contractor shall provide a fully functional desktop copier…" to "….desktop copier/scanner…"

Description Change "Floor Area" to "Floor Area (Outside Dimension)". Change Type B floor area from "15 (160)" to "20 (217)".

639.09 Telephone Paragraph 1 is amended as follows:
The contractor shall provide **two** telephone lines and two telephones,….

Add- In addition the contractor will supply one computer broadband connection, modem lease and router. The router shall have wireless access and be 802.11n or 802.11g capable and wireless The type of connection supplied will be contingent upon the availability of services (i.e. DSL or Cable Broadband). It shall be the contractor's option to provide dynamic or static IP addresses through the service. **The selected service will have a minimum downstream connection of 1.5 Mbps and 384 Kbps upstream.** The contractor shall be responsible for the installation charges and all reinstallation charges following suspended periods. Monthly service and maintenance charges shall be billed by the Internet Service Provider (ISP) directly to the contractor.

SECTION 652
MAINTENANCE OF TRAFFIC

652.2.3 Flashing Arrow Board Delete the existing 5 paragraphs and replace with the following: Flashing Arrow Panels (FAP) must be of a type that has been submitted to AASHTO's National Transportation Product Evaluation Program (NTPEP) for evaluation and placed on the Maine Department of Transportations' Approved Products List of Portable Changeable Message Signs & Flashing Arrow Panels.

FAP units shall meet requirements of the current Manual on Uniform Traffic Control Devices (MUTCD) for Type "C" panels as described in Section 6F.56 - Temporary Traffic Control Devices. An FAP shall have matrix of a minimum of 15 low-glare, sealed beam, Par 46 elements capable of either flashing or sequential displays as well as the various operating modes as described in the MUTCD, Chapter 6-F. If an FAP consisting of a bulb matrix is used, each element should be recess-mounted or equipped with an upper hood of not less than 180 degrees. The color presented by the elements shall be yellow.

FAP elements shall be capable of at least a 50 percent dimming from full brilliance. Full brilliance should be used for daytime operation and the dimmed mode shall be used for nighttime operation. FAP shall be at least 2.4 M x 1.2 M [96" x 48"] and finished in non-reflective black. The FAP shall be interpretable for a distance not less than 1.6 km [1 mile].

Operating modes shall include, flashing arrow, sequential arrow, sequential chevron, flashing

double arrow, and flashing caution. In the three arrow signals, the second light from the arrow point shall not operate.

The minimum element on-time shall be 50 percent for the flashing mode, with equal intervals of 25 percent for each sequential phase. The flashing rate shall be not less than 25 nor more than 40 flashes per minute. All on-board circuitry shall be solid state.

Primary power source shall be 12 volt solar with a battery back-up to provide continuous operation when failure of the primary power source occurs, up to 30 days with fully charged batteries. Batteries must be capable of being charged from an onboard 110 volt AC power source and the unit shall be equipped with a cable for this purpose.

Controller and battery compartments shall be enclosed in lockable, weather-tight boxes.
The FAP shall be mounted on a pneumatic-tired trailer or other suitable support for hauling to various locations, as directed. The minimum mounting height of an arrow panel should be 2.1 M [7 feet] from the roadway to the bottom of the panel.

The face of the trailer shall be delineated on a permanent basis by affixing retro-reflective material, known as conspicuity material, in a continuous line as seen by oncoming drivers.

A portable changeable message sign may be used to simulate an arrow panel display."

652.2.4 Other Devices Delete the last paragraph and add the following:
"652.2.5 Portable Changeable Message Sign Trailer mounted Portable Changeable Message Signs (PCMS) must be of a type that has been submitted to AASHTO's National Transportation Product Evaluation Program (NTPEP) for evaluation and placed on the Maine Department of Transportations' Approved Products List of Portable Changeable Message Signs & Flashing Arrow Panels. The PCMS unit shall meet or exceed the current specifications of the Manual on Uniform Traffic Control Devices (MUTCD), 6F.55.

The front face of the sign should be covered with a low-glare protective material. The color of the LED elements shall be amber on a black background. The PCMS should be visible from a distance of 0.8 km [0.5 mile] day and night and have a minimum 15º viewing angle. Characters must be legible from a distance of at least 200 M [650 feet].

The message panel should have adjustable display rates (minimum of 3 seconds per phase), so that the entire message can be read at least twice at the posted speed, the off-peak 85th-percentile speed prior to work starting, or the anticipated operating speed. Each message shall consist of either one or two phases. A phase shall consist of up to eight characters per line. The unit must be capable of displaying at least three lines of text with eight characters per line. Each character shall be 457 mm [18"] high. Each character module shall use at least a five wide and seven high pixel matrix. The text of the messages shall not scroll or travel horizontally or vertically across the face of the sign.

Units shall automatically adjust their brightness under varying light conditions to maintain legibility.

The control system shall include a display screen upon which messages can be reviewed before being displayed on the message sign. The control system shall be capable of maintaining memory when power is unavailable. Message must be changeable with either a notebook computer or an on-board keypad. The controller shall have the capability to store a minimum of 200 user-defined and 200 pre-programmed messages. Controller and battery compartments shall be enclosed in lockable, weather-tight boxes.

PCMS units shall have the capability of being made programmable by means of wireless communications. PCMS units shall also be fully capable of having an on-board radar system installed if required for a particular application.

PCMS' primary power source shall be solar with a battery back-up to provide continuous operation when failure of the primary power source occurs. Batteries must be capable of being charged from a 110 volt AC power source. The unit must also be capable of being operated solely from a 110 volt AC power source and be equipped with a cable for this purpose.

The PCMS shall be mounted on a trailer in such a way that the bottom of the message sign panel shall be a minimum of 2.1 M [7 ft] above the roadway in urban areas and 1.5 M [5 ft] above the roadway in rural areas when it is in the operating mode. PCMS trailers should be of a heavy duty type with a 51 mm [2"] ball hitch and a minimum of four leveling jacks (at each corner). The sign shall be capable of being rotated 360° relative to the trailer. The face of the trailer shall be delineated on a permanent basis by affixing retro-reflective material, known as conspicuity material, in a continuous line as seen by oncoming drivers."

652.3.3 Submittal of Traffic Control Plan In item e. change "A list of all certified flaggers…" to "A list of all the Contractor's certified flaggers…"

In the last paragraph add the following as the second sentence: "The Department will review and provide comments to the Contractor within 14 days of receipt of the TCP."

652.3.5 Installation of Traffic Control Devices In the first paragraph, first sentence; change "Signs shall be erected…" to "Portable signs shall be erected.." In the third sentence; change "Signs must be erected so that the sign face…" to "Post-mounted signs must also be erected so that the sign face…"

652.4 Flaggers Replace the first paragraph with the following; "The Contractor shall furnish flaggers as required by the TCP or as otherwise specified by the Resident. All flaggers must have successfully completed a flagger test approved by the Department and administered by a Department-approved Flagger-Certifier who is employing that flagger. All flaggers must carry an official certification card with them while flagging that has been issued by their employer. Flaggers shall wear safety apparel meeting ANSI 107-1999 Class 2 risk exposure and clearly identify the wearer as a person, shall be visible at a minimum distance of 300 m [1000 ft], and shall wear a hardhat with retroreflectivity. For nighttime conditions, Class 3 apparel should be considered, retroreflective or flashing SLOW/STOP paddles shall be used, and except in emergency situations the flagger station shall be illuminated to assure visibility."

Second paragraph, first sentence; change "…have sufficient distance to stop before entering the workspace." to "…have sufficient distance to stop at the intended stopping point." Third

sentence; change "At a spot obstruction…" to "At a spot obstruction with adequate sight distance,…"

Fourth paragraph, delete and replace with "Flaggers shall be provided as a minimum, a 10 minute break, every 2 hours and a 30 minute or longer lunch period away from the work station. Flaggers may only receive 1 unpaid break per day; all other breaks must be paid. Sufficient certified flaggers shall be available onsite to provide for continuous flagging operations during break periods. Breaker flaggers will not be paid for separately, but shall be considered incidental to the appropriate pay item."

652.8.2 Other Items Replace the last paragraph with the following: "There will be no payment made under any 652 pay items after the expiration of the adjusted total contract time."

SECTION 653
POLYSTYRENE PLASTIC INSULATION

653.05 Placing Backfill In the second sentence; change "…shall be not less than 150 mm [6 in] loose measure." to "…shall be not less than 250 mm [10 in] loose measure." In the third sentence; change "…crawler type bulldozer of not more than 390 kg/m^2 [80 lb/ft^2] ground contact pressure…" to "…crawler type bulldozer of not more than 4875 kg/m^2 [2000 lb/ft^2] ground contact pressure…"

653.06 Compaction In the last sentence; change "…not more than 390 kg/m^2 [80 lb/ft^2] ground contact…" to "…not more than 4875 kg/m^2 [2000 lb/ft^2] ground contact…"

SECTION 656
TEMPORARY SOIL EROSION AND WATER POLLUTION CONTROL

656.5.1 If Pay Item 656.75 Provided Replace the second paragraph with the following: "Failure by the Contractor to follow Standard Specification or Special Provision - Section 656 and/or the Contractor's own Soil Erosion and Pollution Control Plan will result in a reduction in payment, computed by reducing the Lump Sum Total by 5% per occurrence per day. The Department's Resident or any other representative of the Department reserves the right to suspend the work at any time and request a meeting to discuss violations and remedies. The Department shall not be held responsible for any delay in the work due to any suspension under this item."

SECTION 701
STRUCTURAL CONCRETE RELATED MATERIALS

701.10 Fly Ash - Chemical Requirements Change all references from "ASTM C311" to "ASTM C114".

SECTION 703
AGGREGATES

703.05 Aggregate for Sand Leveling Change the percent passing the 9.5 mm [3/8 in] sieve from "85 – 10" to "85 – 100"

703.06 Aggregate for Base and Subbase Delete the first paragraph: "The material shall have…" and replace with "The material shall have a minimum degradation value of 15 as determined by Washington State DOT Test Method T113, Method of Test for Determination of Degradation Value (March 2002 version), except that the reported degradation value will be the result of testing a single specimen from that portion of a sample that passes the 12.5 mm [½ in] sieve and is retained on the 2.00 mm [No. 10] sieve, minus any reclaimed asphalt pavement used."

703.07 Aggregates for HMA Pavements Delete the forth paragraph: "The composite blend shall have…" and replace with "The composite blend, minus any reclaimed asphalt pavement used, shall have a Micro-Deval value of 18.0 or less as determined by AASHTO T 327. In the event the material exceeds the Micro Deval limit, a Washington Degradation test shall be performed. The material shall be acceptable if it has a value of 30 or more as determined by Washington State DOT Test Method T 113, Method of Test for Determination of Degradation Value (March 2002 version) except that the reported degradation value will be the result of testing a single composite specimen from that portion of the sample that passes the 12.5mm [1/2 inch] sieve and is retained on the 2.00mm [No 10] sieve, minus any reclaimed asphalt pavement used."

703.09 HMA Mixture Composition The coarse and fine aggregate shall meet the requirements of Section 703.07. The several aggregate fractions for mixtures shall be sized, graded, and combined in such proportions that the resulting composite blends will meet the grading requirements of the following table.

AGGREGATE GRADATION CONTROL POINTS

SIEVE SIZE	Nominal Maximum Aggregate Size---Control Points (Percent Passing)				
	TYPE 25 mm	TYPE 19 mm	TYPE 12.5 mm	TYPE 9.5 mm	TYPE 4.75 mm
	PERCENT BY WEIGHT PASSING - COMBINED AGGREGATE				
37.5 mm	100				
25 mm	90-100	100			
19 mm	-90	90-100	100		
12.5 mm		-90	90-100	100	100
9.5 mm		-	-90	90-100	95-100
4.75 mm		-	-	-90	80-100
2.36 mm	19-45	23-49	28-58	32-67	40 - 80
1.18 mm		-	-	-	-
600 µm		-	-	-	-
300 µm		-	-	-	-
75 µm	1-7	2-8	2-10	2-10	2-10

Gradation Classification---- The combined aggregate gradation shall be classified as coarse-graded when it passes below the Primary Control Sieve (PCS) control point as defined in the following table. All other gradations shall be classified as fine-graded.

GRADATION CLASSIFICATION

PCS Control Point for Mixture Nominal Maximum Aggregate Size (% passing)				
Nominal Maximum Aggregate Size	TYPE 25 mm	TYPE 19 mm	TYPE 12.5 mm	TYPE 9.5 mm
Primary Control Sieve	4.75 mm	4.75 mm	2.36 mm	2.36 mm
PCS Control Point (% passing)	40	47	39	47

If a Grading "D" mixture is allowed per Special Provision Section 403, it shall meet the following gradation and the aggregate requirements of Section 703.07.

Sieve Designation	Percentage by Weight Passing Square Mesh Sieves
½ inch	100
⅜ inch	93-100
No. 4	60-80
No. 8	46-65
No. 16	25-55
No. 30	16-40
No. 50	10-30
No. 100	6-22
No. 200	3.0-8.0

703.18 Common Borrow Replace the first paragraph with the following: "Common borrow shall consist of earth, suitable for embankment construction. It shall be free from frozen material, perishable rubbish, peat, and other unsuitable material including material currently or previously contaminated by chemical, radiological, or biological agents unless the material is from a DOT project and authorized by DEP for use."

703.22 Underdrain Backfill Material Change the first paragraph from "…for Underdrain Type B…" to "…for Underdrain Type B and C…"

Replace subsections 703.25 through 703.28 with the following:
"703.25 Stone Fill Stones for stone fill shall consist of hard, sound, durable rock that will not disintegrate by exposure to water or weather. Stone for stone fill shall be angular and rough. Rounded, subrounded, or long thin stones will not be allowed. Stone for stone fill may be obtained from quarries or by screening oversized rock from earth borrow pits. The maximum allowable length to thickness ratio will be 3:1. The minimum stone size (10 lbs) shall have an average dimension of 5 inches. The maximum stone size (500 lbs) shall have a maximum dimension of approximately 36 inches. Larger stones may be used if approved by the Resident. Fifty percent of the stones by volume shall have an average dimension of 12 inches (200 lbs).

703.26 Plain and Hand Laid Riprap Stone for riprap shall consist of hard, sound durable rock that will not disintegrate by exposure to water or weather. Stone for riprap shall be angular

and rough. Rounded, subrounded or long thin stones will not be allowed. The maximum allowable length to width ratio will be 3:1. Stone for riprap may be obtained from quarries or by screening oversized rock from earth borrow pits. The minimum stone size (10 lbs) shall have an average dimension of 5 inches. The maximum stone size (200 lbs) shall have an average dimension of approximately 12 inches. Larger stones may be used if approved by the Resident. Fifty percent of the stones by volume shall have an average dimension greater than 9 inches (50 lbs).

703.27 Stone Blanket Stones for stone blanket shall consist of sound durable rock that will not disintegrate by exposure to water or weather. Stone for stone blanket shall be angular and rough. Rounded or subrounded stones will not be allowed. Stones may be obtained from quarries or by screening oversized rock from earth borrow pits. The minimum stone size (300 lbs) shall have minimum dimension of 14 inches, and the maximum stone size (3000 lbs) shall have a maximum dimension of approximately 66 inches. Fifty percent of the stones by volume shall have average dimension greater than 24 inches (1000 lbs).

703.28 Heavy Riprap Stone for heavy riprap shall consist of hard, sound, durable rock that will not disintegrate by exposure to water or weather. Stone for heavy riprap shall be angular and rough. Rounded, subrounded, or thin, flat stones will not be allowed. The maximum allowable length to width ratio will be 3:1. Stone for heavy riprap may be obtained from quarries or by screening oversized rock from earth borrow pits. The minimum stone size (500 lbs) shall have minimum dimension of 15 inches, and at least fifty percent of the stones by volume shall have an average dimension greater than 24 inches (1000 lbs)."

Add the following paragraph:
"703.32 Definitions (ASTM D 2488, Table 1).
Angular: Particles have sharp edges and relatively plane sides with unpolished surfaces
Subrounded: Particles have nearly plane sides but have well-rounded corners and edges
Rounded: Particles have smoothly curved sides and no edges"

SECTION 706
NON-METALLIC PIPE

706.06 Corrugated Polyethylene Pipe for Underdrain, Option I and Option III Culvert Pipe Change the first sentence from "…300 mm diameters to 900 mm" to "…300 mm diameters to 1200 mm" Delete, in it's entirety, the last sentence which begins "This pipe and resins…" and replace with the following; "The manufacturing plants of polyethylene pipe shall be certified by the Eastern States Consortium. Polyethylene pipe shall be accepted based on third party certification by the AASHTO's National Transportation Product Evaluation Program."

SECTION 709
REINFORCING STEEL AND WELDED STEEL WIRE FABIC

709.03 Steel Strand Change the second paragraph from "…shall be 12mm [½ inch] AASHTO M203M/M203 (ASTM A416/A416M)…" to "…shall be 15.24 mm [0.600 inch] diameter AASHTO M203 (ASTM A416)…"

SECTION 710

FENCE AND GUARDRAIL

710.03 Chain Link Fabric Add the following sentence: "Chain Link fabric for PVC coated shall conform to the requirements of AASHTO M181, Type IV-Class B."

710.04 Metal Beam Rail Replace with the following: "Galvanized steel rail elements shall conform to the requirements of AASHTO M 180, Class A, Type II.

When corrosion resistant steel is specified, rail shall conform to AASHTO M 180, Class A, Type IV. Beams of corrosion resistant steel shall not be painted or galvanized. They shall be so handled and stored that the traffic face of these beams, used in a continuous run of guardrail, shall not show a distinctive color differential.

When metal beam rail is to be installed on a curve having a radius of curvature of 150 ft. or less, the beam sections shall be fabricated on an arc to the required radius and permanently stamped or embossed with the designated radius.

The engineer may take one piece of guardrail, a backup plate, and end or buffer section from each 200 pieces in a lot, or from each lot if less than 200 pieces are included therein for determination of compliance with specification requirements. If one piece fails to conform to the requirements of this specification, two other pieces shall be tested. If either of these pieces fails to conform to the requirements of this specification, the lot of material represented by these samples shall be rejected. A lot shall be considered that quantity of material offered for inspection at one time that bears the same heat and coating identification."

710.07 Guardrail Posts Section b. change "…AASHTO M183/M183M…" to "…AASHTO M 270M/M 270 Grade 250 (36)…"

SECTION 712
MISCELLANEOUS HIGHWAY MATERIALS

712.06 Precast Concrete Units In the first paragraph, change "…ASTM C478M…" to "…AASHTO M199…" Delete the second paragraph and replace with the following; "Approved structural fibers may be used as a replacement of 6 x 6 #10 gauge welded wire fabric when used at an approved dosage rate for the construction of manhole and catch basin units. The material used shall be one of the products listed on the Maine Department of Transportation's Approved Product List of Structural Fiber Reinforcement." Delete the fifth paragraph and replace with the following; "The concrete mix design shall be approved by the Department. Concrete shall contain 6% air content, plus or minus 1½% tolerance when tested according to AASHTO T152. All concrete shall develop a minimum compressive strength of 28 MPa [4000 psi] in 28 days when tested according to AASHTO T22. The absorption of a specimen, when tested according to AASHTO T280, Test Method "A", shall not exceed nine percent of the dry mass."

Add the following:
"712.07 Tops, and Traps These metal units shall conform to the plan dimensions and to the following specification requirements for the designated materials.

Gray iron or ductile iron castings shall conform to the requirements of AASHTO M306 unless otherwise designated."

712.08 Corrugated Metal Units The units shall conform to plan dimensions and the metal to AASHTO M36/M36M. Bituminous coating, when specified, shall conform to AASHTO M190 Type A.

712.09 Catch Basin and Manhole Steps Steps for catch basins and for manholes shall conform to ASTM C478M [ASTM C478], Section 13 for either of the following material:

(a) Aluminum steps-ASTM B221M, [ASTM B211] Alloy 6061-T6 or 6005-T5.

(b) Reinforced plastic steps Steel reinforcing bar with injection molded plastic coating copolymer polypropylene. Polypropylene shall conform to ASTM D 4101.

712.23 Flashing Lights Flashing Lights shall be power operated or battery operated as specified.

(a) Power operated flashing lights shall consist of housing, adapters, lamps, sockets, reflectors, lens, hoods and other necessary equipment designed to give clearly visible signal indications within an angle of at least 45 degrees and from 3 to 90 m [10 to 300 ft] under all light and atmospheric conditions.

Two circuit flasher controllers with a two-circuit filter capable of providing alternate flashing operations at the rate of not less than 50 nor more than 60 flashes per minute shall be provided.

The lamps shall be 650 lumens, 120 volt traffic signal lamps with sockets constructed to properly focus and hold the lamp firmly in position.
The housing shall have a rotatable sun visor not less than 175 mm [7 in] in length designed to shield the lens.

Reflectors shall be of such design that light from a properly focused lamp will reflect the light rays parallel. Reflectors shall have a maximum diameter at the point of contact with the lens of approximately 200 mm [8 in].

The lens shall consist of a round one-piece convex amber material which, when mounted, shall have a visible diameter of approximately 200 mm [8 in]. They shall distribute light and not diffuse it. The distribution of the light shall be asymmetrical in a downward direction. The light distribution of the lens shall not be uniform, but shall consist of a small high intensity portion with narrow distribution for long distance throw and a larger low intensity portion with wide distribution for short distance throw. Lenses shall be marked to indicate the top and bottom of the lens.

(b) Battery operated flashing lights shall be self- illuminated by an electric lamp behind the lens. These lights shall also be externally illuminated by reflex-reflective elements built into the lens to enable it to be seen by reflex-reflection of the light from the headlights of oncoming traffic. The batteries must be entirely enclosed in a case. A locking device must secure the case. The light shall have a flash rate of not less than 50

nor more than 60 flashes per minute from minus 30 °C [minus 20 °F] to plus 65 °C [plus 150 °F]. The light shall have an on time of not less than 10 percent of the flash cycle. The light beam projected upon a surface perpendicular to the axis of the light beam shall produce a lighted rectangular projection whose minimum horizontal dimension shall be 5 degrees each side of the horizontal axis. The effective intensity shall not have an initial value greater than 15.0 candelas or drop below 4.0 candelas during the first 336 hours of continuous flashing. The illuminated lens shall appear to be uniformly bright over its entire illuminated surface when viewed from any point within an angle of 9 degrees each side of the vertical axis and 5 degrees each side of the horizontal axis. The lens shall not be less than 175 mm [7 in] in diameter including a reflex-reflector ring of 13 mm [½ in] minimum width around the periphery. The lens shall be yellow in color and have a minimum relative luminous transmittance of 0.440 with a luminance of 2854° Kelvin. The lens shall be one-piece construction. The lens material shall be plastic and meet the luminous transmission requirements of this specification. The case containing the batteries and circuitry shall be constructed of a material capable of withstanding abuse equal to or greater than 1.21 mm thick steel [No. 18 U.S. Standard Gage Steel]. The housing and the lens frame, if of metal shall be properly cleaned, degreased and pretreated to promote adhesion. It shall be given one or more coats of enamel which, when dry shall completely obscure the metal. The enamel coating shall be of such quality that when the coated case is struck a light blow with a sharp tool, the paint will not chip or crack and if scratched with a knife will not powder. The case shall be so constructed and closed as to exclude moisture that would affect the proper operation of light. The case shall have a weep hole to allow the escape of moisture from condensation. Photoelectric controls, if provided, shall keep the light operating whenever the ambient light falls below 215 lx [20 foot candles]. Each light shall be plainly marked as to the manufacturer's name and model number.

If required by the Resident, certification as to conformance to these specifications shall be furnished based on results of tests made by an independent testing laboratory. All lights are subject to random inspection and testing. All necessary random samples shall be provided to the Resident upon request without cost to the Department. All such samples shall be returned to the Contractor upon completion of the tests.

712.32 Copper Tubing Copper tubing and fittings shall conform to the requirements of ASTM B88M Type A [ASTM B88, Type K] or better.

712.33 Non-metallic Pipe, Flexible Non-metallic pipe and pipe fittings shall be acceptable flexible pipe manufactured from virgin polyethylene polymer suitable for transmitting liquids intended for human or animal consumption.

712.34 Non-metallic Pipe, Rigid Non-metallic pipe shall be Schedule 40 polyvinylchloride (PVC) that meets the requirement of ASTM D1785. Fittings shall be of the same material.

712.341 Metallic Pipe Metallic pipe shall be ANSI, Standard B36.10, Schedule 40 steel pipe conforming to the requirements of ASTM A53 Types E or S, Grade B. End plates shall be steel conforming to ASTM A36/A36M.

Both the sleeve and end plates shall be hot dip galvanized. Pipe sleeve splices shall be welded splices with full penetration weld before galvanizing.

712.35 Epoxy Resin Epoxy resin for grouting or sealing shall consist of a mineral filled thixotropic, flexible epoxy resin having a pot life of approximately one hour at 10°C [50°F]. The grout shall be an approved product suitable for cementing steel dowels into the preformed holes of curb inlets and adjacent curbing. The sealant shall be an approved product, light gray in color and suitable for coating the surface.

712.36 Bituminous Curb The asphalt cement for bituminous curb shall be of the grade required for the wearing course, or shall be Viscosity Grade AC-20 meeting the current requirements of Subsection 702.01 Asphalt Cement. The aggregate shall conform to the requirements of Subsection 703.07. The coarse aggregate portion retained on the 2.36 mm [No. 8] sieve may be either crushed rock or crushed gravel.

The mineral constituents of the bituminous mixture shall be sized and graded and combined in a composite blend that will produce a stable durable curbing with an acceptable texture.

Bituminous material for curb shall meet the requirements of Section 403 - Hot Bituminous Pavement.

712.37 Precast Concrete Slab Portland cement concrete for precast slabs shall meet the requirements of Section 502 - Structural Concrete, Class A.

The slabs shall be precast to the dimension shown on the plans and cross section and in accordance with the Standard Detail plans for Concrete Sidewalk Slab. The surface shall be finished with a float finish in accordance with Subsection 502.14(c). Lift devices of sufficient strength to hold the slab while suspended from cables shall be cast into the top or back of the slab.

712.38 Stone Slab Stone slabs shall be of granite from an acceptable source, hard, durable, predominantly gray in color, free from seams which impair the structural integrity and be of smooth splitting character. Natural color variations characteristic of the deposit will be permitted. Exposed surfaces shall be free from drill holes or indications of drill holes. The granite slabs in any one section of backslope must be all the same finish.

The granite slabs shall be scabble dressed or sawed to an approximately true plane having no projections or depressions over 13 mm [½ in] under a 600 mm [2 ft] straightedge or over 25 mm [1 in] under a 1200 mm [4 ft] straightedge. The arris at the intersection of the top surface and exposed front face shall be pitched so that the arris line is uniform throughout the length of the installed slabs. The sides shall be square to the exposed face unless the slabs are to be set on a radius or other special condition which requires that the joints be cut to fit, but in any case shall be so finished that when the stones are placed side by side no space more than 20 mm [3/4 in] shall show in the joint for the full exposed height.

Liftpin holes in all sides will be allowed except on the exposed face.

ROADSIDE IMPROVEMENT MATERIAL

717.03 C. Method #3 - Roadside Mixture #3 Change the seed proportions to the following:

Crown Vetch	25%
Perennial Lupine	25%
Red Clover	12.5%
Annual Rye	37.5%

717.05 Mulch Binder Change the third sentence to read as follows:

"Paper fiber mulch may be used as a binder at the rate of 2.3 kg/unit [5 lb/unit]."

SECTION 720
STRUCTURAL SUPPORTS FOR HIGHWAY SIGNS, LUMINAIRES, AND TRAFFIC SIGNALS

720.08 U-Channel Posts Change the first sentence from "…, U-Channel posts…" to "…, Rib Back U-Channel posts…"

SECTION 722
GEOTEXTILES

722.01 Stabilization/Reinforcement Geotextile Add the following to note #3; "The strengths specified in the columns labeled"<50%" and "≥ 50%" refer to the elongation at which the geotextile material was tested. For example; if a fabric is tested at 15% elongation then it must meet or exceed the minimum strength shown in the "<50%" column. Submittals must include the percent elongation at which the material was tested."

722.02 Drainage Geotextile Add the following to note #3; "The strengths specified in the columns labeled"<50%" and "≥ 50%" refer to the elongation at which the geotextile material was tested. For example; if a fabric is tested at 15% elongation then it must meet or exceed the minimum strength shown in the "<50%" column. Submittals must include the percent elongation at which the material was tested."

722.01 Erosion Control Geotextile Add the following note to Elongation in the Mechanical Property Table; "The strengths specified in the columns labeled"<50%" and "≥ 50%" refer to the elongation at which the geotextile material was tested. For example; if a fabric is tested at 15% elongation then it must meet or exceed the minimum strength shown in the "<50%" column. Submittals must include the percent elongation at which the material was tested."

Environmental Summary Sheet

PIN #: 15968.00 **Town: Weston**
Environmental Office Contact: Laurie Rowe (laurie.rowe@maine.gov) 215-5072
Coordination & Permits Manager: Matt Steele **Date Submitted:7/21/09**
Database/Projex ☒

☒ **Section 106 and Tribal Consultation** - Complete

☒ **4(f) and 6(f)**
Section 4(f) - No Federal $

LAWCON 6(f) N/A ☒ Applicable☐ Approved ☐

☒ **Maine Department of Inland Fisheries and Wildlife (MDIFW) Essential Habitat**

GIS Essential Habitats Checked ☒

Eagle Nest	N/A ☒	Applicable ☐	Approved ☐
Piping Plover	N/A ☒	Applicable ☐	Approved ☐
Roseate Tern	N/A ☒	Applicable☐	Approved ☐

☒ **Maine Department of Environmental Protection (MDEP), Natural Resource Protection Act**

No permit required ☐
Exempt ☐ (Must use erosion and sediment control and not block fish passage.)

PBR	☒	Approved☒
Tier 1	☐	Approved ☐
Tier 2	☐	Approved ☐
Individual	☐	Approved ☐

☒ **Army Corps of Engineers (ACOE), Section 10 of the Rivers and Harbors Act and Section 404 of the Clean Water Act.**

No permit required ☐

Category 1-NR☐	Approved ☐
Category 2☐	Approved ☐
Category 3☒	Approved ☒

NOTE: If project requires a Category 2 or 3 Permit from the ACOE, then the MaineDOT Resident **must** fill out a **"Work Start Notification Form"** and a **"Compliance Certification Form" (when project has been completed)** and send them to the address listed on the forms.

☒ **IN-STREAM TIMING RESTRICTIONS:** 105 Special Provision ☒ n/a ☐
Dates instream work is allowed: 7/15 to 9/30

☒ Special Provision 656, Erosion Control Plan ☒ Special Provision 203, Dredge Spec and/or Hazardous Waste Spec

11. State transportation facilities

A. Applicability

(1) This section applies to the maintenance, repair, reconstruction, rehabilitation, replacement or minor construction of a State Transportation Facility carried out by, or under the authority of, the Maine Department of Transportation or the Maine Turnpike Authority, including any testing or preconstruction engineering, and associated technical support services.

(2) This section does not apply to an activity within a coastal sand dune system.

NOTE: The construction of a transportation facility other than roads and associated facilities may be subject to the Storm Water Management Law, 38 M.R.S.A. Section 420-D.

B. Standards

(1) Photographs of the area to be altered by the activity must be taken before work on the site begins. The photographs must be kept on file and be made available at the request of the DEP.

(2) The activity must be reviewed by the Department of Inland Fisheries and Wildlife, the Department of Marine Resources, and the Atlantic Salmon Authority. The activity must be performed according to any recommendations from these authorities.

(3) The activity must be performed in accordance with erosion control measures conforming with the State of Maine Department of Transportation Standard Specifications for Highways and Bridges Revision of April 1995 and with the Department of Transportation's Best Management Practices for Erosion and Sediment Control, September 1997.

NOTE: Guidance on the use of erosion control best management practices can be obtained from the on site Construction Manager.

---

(4) Alignment changes may not exceed a distance of 200 feet between the old and new center lines in any natural resource.

(5) The activity may not alter more than 300 feet of shoreline (both shores added together) within a mile stretch of any river, stream or brook, including any bridge width or length of culvert.

(6) The activity may not alter more than 150 feet of shoreline (both shores added together) within a mile stretch of any outstanding river segment identified in 38 M.R.S.A. 480-P, including any bridge width or length of culvert.

(7) The activity must minimize wetland intrusion. The activity is exempt from the provisions of Chapter 310, the Wetland Protection Rules, if the activity alters less than 15,000 square feet of natural resources per mile of roadway (centerline measurement) provided that the following impacts are not exceeded within the 15,000 square foot area:

(a) 1,000 square feet of coastal wetland consisting of salt tolerant vegetation or shellfish habitat; or

(b) 5,000 square feet of coastal wetland not containing salt tolerant vegetation or shellfish habitat; or

(c) 1,000 square feet of a great pond.

All other activities must be performed in compliance with all sections of Chapter 310, the Wetland Protection Rules, except 310.2(C), 5(A), 9(1), 9(B) and 9(C).

(8) The activity may not permanently block any fish passage in any watercourse containing fish. The applicant must improve passage beyond what restriction may already exist unless the Department of Inland Fisheries and Wildlife, the Department of Marine Resources, and the Atlantic Salmon Authority concur that the improvement is not necessary.

(9) Rocks may not be removed from below the normal high water line of any coastal wetland, freshwater wetland, great pond, river, stream or brook except to the minimum extent necessary for completion of work within the limits of construction.

(10) If work is performed in a river, stream or brook that is less than three feet deep at the time and location of the activity, with the exception of culvert installation, the applicant must divert flow away from the activity while work is in progress.

(a) Diversion may be accomplished by the use of stable, inert material. No more than two thirds (2/3) of stream width may be diverted at one time.

(b) Any material used to divert water flow must be completely removed upon completion of the activity, and the stream bottom must be restored to its original condition.

(c) A pump may be operated, where necessary, for a temporary diversion. The pump outlet must be located and operated such that erosion or the discharge of sediment to the water is prevented.

NOTE: Guidance on the appropriate location of a diversion and materials which should be used for a stream diversion can be obtained from the on site Construction Manager.

---

(11) Wheeled or tracked equipment may not operate in the water. Equipment operating on the shore may reach into the water with a bucket or similar extension. Equipment may cross streams on rock, gravel or ledge bottom.

(12) All wheeled or tracked equipment that must travel or work in a vegetated wetland area must travel and work on mats or platforms.

(13) Any debris or excavated material must be stockpiled either outside the wetland or on mats or platforms. Hay bales or silt fence must be used, where necessary, to prevent sedimentation. Any debris generated during the activity must be prevented from washing downstream and must be removed from the wetland or water body. Disposal

of debris must be in conformance with the Maine Hazardous Waste, Septage and Solid Waste Management Act, 38 M.R.S.A. Section 1301 *et seq.*

(14) Work below the normal high water line of a great pond, river, stream or brook must be done at low water except for emergency work or work agreed to by the resource agencies listed in paragraph 2 above. Measures, such as a silt boom or staked fencing, must be employed to reduce and isolate turbidity.

(15) Perimeter controls must be installed before the work starts. Disturbance of natural resources beyond the construction limits shown on the plans is not allowed under this rule.

NOTE: Guidance on the location of construction limits can be obtained from the on site Construction Manager.

---

(16) The use of untreated lumber is preferred. Lumber pressure treated with chromated copper arsenate (CCA) may be used, provided it is cured on dry land in a manner that exposes all surfaces to the air for a period of at least 21 days prior to construction. Wood treated with creosote or pentachlorophenol may not be used where it will contact water.

(17) A temporary road for equipment access must be constructed of crushed stone, blasted ledge, or similar materials that will not cause sedimentation or restrict fish passage. Such roads must be completely removed at the completion of the activity. In addition, any such temporary roads which are in rivers, streams or brooks, must allow for a passage of stormwater flows associated with a 10-year storm.

(18) Soil may not be disturbed during any period when soils are saturated due to rain or snow melt, except as necessary to protect work in progress or as required for bridge maintenance activities. Areas where soils are saturated (i.e. water drips from the soil when squeezed by hand, or the soil is capable of being rolled into a rod 1/8th inch in diameter that does not crumble) must be immediately mulched if they are disturbed.

(19) Disturbed soil must be protected within one week from the time it was last actively worked, and prior to any storm event, using temporary or permanent measures such as the placement of riprap, sod, mulch, erosion control blankets, or other comparable measures.

(20) Hay bale or straw mulch, where used, must be applied at a rate of at least one bale per 500 square feet (1 to 2 tons per acre).

(21) If mulch is likely to be moved because of steep slopes or wind exposure, it must be anchored with netting, peg and twine, binder or other suitable method and must be maintained until a catch of vegetation is established over the entire disturbed area.

(22) In addition to the placement of riprap, sod, erosion control blankets or mulch, additional steps must be taken where necessary to prevent sedimentation of the water Evidence of sedimentation includes visible sheet, rill or gully erosion, discoloration of water by suspended particles and/or slumping of banks. Silt fences, staked hay bales and other sedimentation control measures, where planned for, must be in place

prior to the commencement of an activity, but must also be installed whenever necessary to prevent erosion and sedimentation.

NOTE: Guidance on the location and proper installation of erosion control measures can be obtained from the on site Construction Manager.

---

(23) Temporary erosion control measures must be maintained and inspected weekly until the site is permanently stabilized with vegetation or other permanent control measures. Erosion control measures must also be inspected immediately prior to and following storms.

(24) Permanent erosion control measures protecting all disturbed areas must be implemented within 30 days from the time the areas were last actively worked, or for fall and winter activities by the following June 15, except where precluded by the type of activity (e.g. riprap, road surfaces, etc.). The permanent erosion control measures must be maintained.

(25) The applicant shall immediately take appropriate measures to prevent erosion or sedimentation from occurring or to correct any existing problems, regardless of the time of year.

(26) Non-native species may not be planted in restored areas.

(27) Disposal of debris must be in conformance with Maine Hazardous Waste, Septage and Solid Waste Management Act, 38 M.R.S.A. Sections 1301 *et seq.*

(28) Disturbance of vegetation must be avoided, if possible. Where vegetation is disturbed outside of the area covered by any road or structure construction, it must be reestablished immediately upon completion of the activity and must be maintained.

(29) A vegetated area at least 25 feet wide must be established and maintained between any new stormwater outfall structure and the high water line of any open water body. A velocity reducing structure must be constructed at the outlet of the stormwater outfall that will create sheet flow of stormwater, and prevent erosion of soil within the vegetated buffer. If the 25 foot vegetated buffer is not practicable, the applicant must explain the reason for a lesser setback in writing. Approval from the DEP must be in writing and any recommendations must be incorporated into the activity.

C. Definitions. The following terms, as used in this chapter, have the following meanings, unless the context indicates otherwise:

(1) Diversion. A rerouting of a river, stream or brook to a location outside of its established channel.

(2) Fill. a. (verb) To put into or upon, supply to, or allow to enter a water body or wetland any earth, rock, gravel, sand, silt, clay, peat, or debris; b. (noun) Material, other than structures, placed in or immediately adjacent to a wetland or water body.

(3) Floodplain wetlands. Freshwater wetlands that are inundated with flood water during a 100-year flood event based on flood insurance maps produced by the Federal Emergency Agency or other site specific information.

(4) Riprap. Rocks that are fit into place, usually without mortar, on a slope as defined in the State of Maine, Department of Transportation, Standard Specifications for Highway and Bridges, revision of April 1995.

DEPARTMENT OF THE ARMY PERMIT

Permittee **Maine Dept. of Transportation, 16 State House Station, Augusta, Maine 04333**

Permit No. **NAE-2009-00514**

Issuing Office **New England District**

NOTE: The term "you" and its derivatives, as used in this permit, means the permittee or any future transferee. The term "this office" refers to the appropriate district or division office of the Corps of Engineers having jurisdiction over the permitted activity or the appropriate official of that office acting under the authority of the commanding officer.

You are authorized to perform work in accordance with the terms and conditions specified below.

Project Description:

Place permanent and temporary fill below the ordinary high water line and the high tide line of numerous waterways and in their adjacent freshwater and tidal wetlands throughout the State of Maine in order to repair, rehabilitate, or replace numerous existing deteriorated bridges or culverts.

Project Description Continued on Page 4

This work is shown on the attached plans entitled, "MAINE DOT, 2 YEAR BRIDGE PROJECTS", on six sheets, and dated "JUNE 2009" and with the 1:2000 USGS Quadrangle Map location plans and tables contained in the administrative record.

Project Location:

In numerous waterways and in their adjacent freshwater and tidal wetlands throughout the State of Maine

Permit Conditions:

General Conditions:

1. The time limit for completing the work authorized ends on December 31, 2019. If you find that you need more time to complete the authorized activity, submit your request for a time extension to this office for consideration at least one month before the above date is reached.

2. You must maintain the activity authorized by this permit in good condition and in conformance with the terms and conditions of this permit. You are not relieved of this requirement if you abandon the permitted activity, although you may make a good faith transfer to a third party in compliance with General Condition 4 below. Should you wish to cease to maintain the authorized activity or should you desire to abandon it without a good faith transfer, you must obtain a modification of this permit from this office, which may require restoration of the area.

3. If you discover any previously unknown historic or archeological remains while accomplishing the activity authorized by this permit, you must immediately notify this office of what you have found. We will initiate the Federal and state coordination required to determine if the remains warrant a recovery effort or if the site is eligible for listing in the National Register of Historic Places.

4. If you sell the property associated with this permit, you must obtain the signature of the new owner in the space provided and forward a copy of the permit to this office to validate the transfer of this authorization.

5. If a conditioned water quality certification has been issued for your project, you must comply with the conditions specified in the certification as special conditions to this permit. For your convenience, a copy of the certification is attached if it contains such conditions.

6. You must allow representatives from this office to inspect the authorized activity at any time deemed necessary to ensure that it is being or has been accomplished in accordance with the terms and conditions of your permit.

Special Conditions:

1. The permittee shall ensure that a copy of this permit is at the work site whenever work is being performed and that all personnel performing work at the site of the work authorized by this permit are fully aware of the terms and conditions of the permit. This permit, including its drawings and any appendices and other attachments, shall be made a part of any and all contracts and sub-contracts for work which affects areas of Corps of Engineers jurisdiction at the site of the work authorized by this permit. This shall be done by including the entire permit in the specifications for work.

Special Conditions continued on Page 4

Further Information:

1. Congressional Authorities: You have been authorized to undertake the activity described above pursuant to:

   X Section 10 of the Rivers and Harbors Act of 1899 (33 U.S.C. 403).

   X) Section 404 of the Clean Water Act (33 U.S.C. 1344).

   ( ) Section 103 of the Marine Protection, Research and Sanctuaries Act of 1972 (33 U.S.C. 1413).

2. Limits of this authorization.

   a. This permit does not obviate the need to obtain other Federal, state, or local authorizations required by law.

   b. This permit does not grant any property rights or exclusive privileges.

   c. This permit does not authorize any injury to the property or rights of others.

   d. This permit does not authorize interference with any existing or proposed Federal project.

3. Limits of Federal Liability. In issuing this permit, the Federal Government does not assume any liability for the following:

   a. Damages to the permitted project or uses thereof as a result of other permitted or unpermitted activities or from natural causes.

   b. Damages to the permitted project or uses thereof as a result of current or future activities undertaken by or on behalf of the United States in the public interest.

   c. Damages to persons, property, or to other permitted or unpermitted activities or structures caused by the activity authorized by this permit.

   d. Design or construction deficiencies associated with the permitted work.

e. Damage claims associated with any future modification, suspension, or revocation of this permit.

4. Reliance on Applicant's Data: The determination of this office that issuance of this permit is not contrary to the public interest was made in reliance on the information you provided.

5. Reevaluation of Permit Decision. This office may reevaluate its decision on this permit at any time the circumstances warrant. Circumstances that could require a reevaluation include, but are not limited to, the following:

a. You fail to comply with the terms and conditions of this permit.

b. The information provided by you in support of your permit application proves to have been false, incomplete, or inaccurate (See 4 above).

c. Significant new information surfaces which this office did not consider in reaching the original public interest decision.

Such a reevaluation may result in a determination that it is appropriate to use the suspension, modification, and revocation procedures contained in 33 CFR 325.7 or enforcement procedures such as those contained in 33 CFR 326.4 and 326.5. The referenced enforcement procedures provide for the issuance of an administrative order requiring you to comply with the terms and conditions of your permit and for the initiation of legal action where appropriate. You will be required to pay for any corrective measures ordered by this office, and if you fail to comply with such directive, this office may in certain situations (such as those specified in 33 CFR 209.170) accomplish the corrective measures by contract or otherwise and bill you for the cost.

6. Extensions. General condition 1 establishes a time limit for the completion of the activity authorized by this permit. Unless there are circumstances requiring either a prompt completion of the authorized activity or a reevaluation of the public interest decision, the Corps will normally give favorable consideration to a request for an extension of this time limit.

Your signature below, as permittee, indicates that you accept and agree to comply with the terms and conditions of this permit.

Judy C. Gates for John Dority — 7/15/09

(PERMITTEE) *(DATE)*

This permit becomes effective when the Federal official, designated to act for the Secretary of the Army, has signed below.

JM McCarthy — 7/15/09

for *(DISTRICT ENGINEER)* *(DATE)*

Philip T. Feir
Colonel, Corps of Engineers

When the structures or work authorized by this permit are still in existence at the time the property is transferred, the terms and conditions of this permit will continue to be binding on the new owner(s) of the property. To validate the transfer of this permit and the associated liabilities associated with compliance with its terms and conditions, have the transferee sign and date below.

(TRANSFEREE) *(DATE)*

☆U.S. GOVERNMENT PRINTING OFFICE: 1986 — 717-425

Project Description Continued from Page 1

This work is being conducted in response to Federal and State stimulus efforts and is designed to address critical bridges and other structures that need immediate attention to insure public safety and protect the economic vitality of Maine's transportation network. Refer to attached table(s) for a list of locations, scope of work, and anticipated impacts.

Special Conditions continued from Page 2

If the permit is issued after the construction specifications but before receipt of bids or quotes, the entire permit shall be included as an addendum to the specifications. If the permit is issued after receipt of bids or quotes, the entire permit shall be included in the contract or sub-contract as a change order. The term "entire permit" includes permit amendments. Although the permittee may assign various aspects of the work to different contractors or sub-contractors, all contractors and sub-contractors shall be obligated by contract to comply with all environmental protection provisions of the entire permit, and no contract or sub-contract shall require or allow unauthorized work in areas of Corps jurisdiction.

2. The permittee shall complete and return the enclosed Compliance Certification Form within one month following the completion of the authorized work.

3. Adequate sedimentation and erosion control devices, such as geotextile silt fences or other devices capable of filtering the fines involved, shall be installed and properly maintained to minimize impacts during construction. These devices must be removed upon completion of work and stabilization of disturbed areas. The sediment collected by these devices must also be removed and placed upland, in a manner that will prevent its later erosion and transport to a waterway or wetland.

4. The permittee shall implement all terms and conditions contained in the attached water quality certification from the Maine Dept. of Environmental Protection dated "May 13, 2008". Copies of all required submittals shall also be provided to the Corps.

5. No temporary fill (e.g., access roads, cofferdams) may be placed in waters or wetlands unless specifically authorized by this permit. If temporary fill is used, it shall be disposed of at an upland site and suitably contained to prevent its subsequent erosion into a water of the U.S., and the area shall be restored to its original contours (but not higher) and character upon completion of the project. During use, such temporary fill must be stabilized to prevent erosion or, in the case fill placed in flowing water (rivers or streams), clean washed stone should be used.

6. Except where stated otherwise, reports, drawings, correspondence and any other submittals required by this permit shall be marked with the words "Permit No. NAE-2009-00514" and shall be addressed to "Inspection Section, CENAE-R, U.S. Army Corps of Engineers, 696 Virginia Road, Concord, MA 01742-2751." Documents which are not marked and addressed in this manner may not reach their intended destination and do not comply with the requirements of this permit.

Special Conditions Continued on Page 5

Special Conditions Continued from Page 4

7. In order to minimize potential impacts to federally endangered shortnose sturgeon and Atlantic salmon and its critical habitat (NMFS Resources), the permittee shall comply with the attached conditions entitled "Corps of Engineers Permit No. NAE-2009-00514, Permit Special Conditions Resulting From Informal Endangered Species Act Consultation With National Marine Fisheries Service".

8. The permittee shall minimize the adverse effects to Atlantic salmon and its critical habitat and incidental take of Atlantic salmon in the rivers and streams where bridge or culvert projects will occur by employing construction techniques that avoid or minimize adverse effects to water quality, aquatic and riparian habitats, and other aquatic organisms. He shall also minimize adverse effects to Atlantic salmon and its critical habitat and incidental take of Atlantic salmon by ensuring that fish passage and habitat connectivity at culverts and bridges is either maintained in its current condition or is improved by the replacement or rehabilitated structure. In meeting these requirements, the permittee shall comply with the attached conditions entitled "Corps of Engineers Permit No. NAE-2009-00514, Permit Special Conditions Resulting From Formal Endangered Species Act Consultation With US Fish & Wildlife Service".

9. In-water work window extension. A project-specific time-of-year restriction may be extended by as much as 10 days without having to formally request permit modification provided:

a. The project site does not support federally endangered shortnose sturgeon, Atlantic salmon, or Atlantic salmon critical habitat. Any extension requests for these sites will be reviewed on a case-by-case basis and may require re-initiation of consultation.

b. Only the Maine DOT Coordination & Permits Division Manager or the Environmental Office Director may grant such an extension and only after state and/or federal fisheries agencies that initially requested the restriction have been notified and approve the extension request. It is understood that any request to fisheries agencies will include the need and justification for such an extension; that it will be a one-time only request; and that Maine DOT will not submit extension requests for projects delayed due to issues of scheduling or failure to complete work due to conditions within a contractor's control.

For any project that receives an extension to its time of year restriction, Maine DOT shall notify the Corps in writing to include the agency approval so the modification of an approved in-water work window for the project can be documented in the permit record.

10. Prior to construction on any single project, the permittee shall provide the Corps of Engineers with project plans for that project. The plans must be on 8-1/2" x 11" paper with a 3/4" margin at the top and must adequately show the proposed work. All plans must be labeled with the bridge number, DOT PIN if applicable, location (roadway name), town, and county. Plans shall be sent to the US Army Corps of Engineers, Maine Project Office, 675 Western Avenue #3, Manchester, Maine 04351; ATTN: Jay Clement. Any submittal(s) to the Corps in compliance with this condition should reference Corps permit no. NAE-2009-00514.

Special Conditions Continued on Page 6

Special Conditions Continued from Page 5

11. This permit does not authorize construction identified as a "Design Build" project. Any work subject to Corps jurisdiction for those bridges may not begin until after the permittee provides project plans that adequately show the proposed work and the Corps approves the work in writing by either an amendment to this permit or a separate permit action. Project plans shall be submitted in a timely fashion that will allow for review and as necessary, coordination/consultation with federal and state resource agencies and the Maine Historic Preservation Commission.

12. In order to fulfill the requirements of Section 106 of the National Historic Preservation Act of 1966, the permittee shall implement the stipulations contained in the attached Memorandum of Agreement.

13. For any bridge project that crosses navigable waters, the permittee must obtain a bridge permit or exemption from the US Coast Guard before beginning construction. For information contact Commander (obr), First Coast Guard District, One South Street - Battery Bldg, New York, NY 10004-5073; phone (212) 668-7021. Navigable waters in the State of Maine are all waters subject to the ebb and flood of the tide, the Penobscot River to Medway, the Kennebec River to Moosehead Lake, and the portion of Lake Umbagog within Maine.

US Army Corps of Engineers®
New England District

INDIVIDUAL PERMIT WORK-START NOTIFICATION FORM

(Minimum Notice: Two weeks before work begins)

****
* MAIL TO: U.S. Army Corps of Engineers, New England District *
*
* Policy Analysis/Technical Support Branch *
* Regulatory Division *
* 696 Virginia Road *
* Concord, Massachusetts 01742-2751 *
****

Corps of Engineers Permit No. NAE-2009-00514 was issued to the Maine Dept. of Transportation. This work is located in numerous waterways and wetlands throughout the State of Maine. The permit authorized the permittee to place permanent and temporary fills in order to repair, rehabilitate, or replace existing deteriorated bridges and culverts.

The people (e.g., contractor) listed below will do the work, and they understand the permit's conditions and limitations.

PLEASE PRINT OR TYPE

Name of Person/Firm: _____

Business Address: _____

_____ _____

_____ _____

_____

Telephone Numbers: ( ) _____ ( ) _____

Proposed Work Dates: **Start:** _____ **Finish:** _____

Permittee/Agent Signature: _____ **Date:** _____

Printed Name: _____ **Title:** _____

Date Permit Issued: _____ Date Permit Expires: _____

****

FOR USE BY THE CORPS OF ENGINEERS

PM: Clement **Submittals Required:** _____

Inspection Recommendation: Inspections should be tied to annual random inspections of PGP projects

_____

US Army Corps of Engineers®
New England District

(Minimum Notice: Permittee must sign and return notification within one month of the completion of work.)

COMPLIANCE CERTIFICATION FORM

USACE Project Number: NAE-2009-00514

Name of Permittee: Maine Dept. of Transportation

Permit Issuance Date: _____

Please sign this certification and return it to the following address upon completion of the activity and any mitigation required by the permit. You must submit this after the mitigation is complete, but not the mitigation monitoring, which requires separate submittals.

****
* MAIL TO: U.S. Army Corps of Engineers, New England District *
*
* Policy Analysis/Technical Support Branch, ATTN: Marie Farese *
*
* Regulatory Division *
* 696 Virginia Road *
* Concord, Massachusetts 01742-2751 *
****

Please note that your permitted activity is subject to a compliance inspection by an U.S. Army Corps of Engineers representative. If you fail to comply with this permit you are subject to permit suspension, modification, or revocation.

I hereby certify that the work authorized by the above referenced permit was completed in accordance with the terms and conditions of the above referenced permit, and any required mitigation was completed in accordance with the permit conditions.

_____ _____

Signature of Permittee ***Date***

_____ _____

Printed Name **Date of Work Completion**

( ) _____ ( ) _____

Telephone Number ***Telephone Number***

Corps of Engineers Permit No. NAE-2009-00514
Permit Special Conditions Resulting From
Formal Endangered Species Act Consultation
With US Fish & Wildlife Service
(Reference USFWS Biological Opinion dated "June 19, 2009")

1. Maine DOT shall hold a pre-construction meeting for each project with appropriate Maine DOT Environmental Office staff, other Maine DOT staff, and the Maine DOT construction crew (as practicable) or the contractor(s), to review all procedures and requirements for avoiding and minimizing impacts to Atlantic salmon and to emphasize the importance of these measures for protecting salmon and their habitat. Corps staff will attend these meetings as practicable.

2. Maine DOT and their contractors will minimize the potential for impacts to Atlantic salmon and their habitat by conducting all instream work (which includes the installation and removal of cofferdams, as well as other activities) according to the work windows specified in Table 1 (page 6) of the US Fish & Wildlife Service Biological Opinion dated "June 19, 2009".

3. Maine DOT and their contractors will minimize the potential for impacts to Atlantic salmon and their habitat by conducting all construction activities for each project in accordance with the Maine DOT-approved Soil Erosion and Water Pollution Control Plan.

4. A fish evacuation plan must be implemented by appropriate Maine DOT staff during construction and dewatering of all cofferdams to carefully remove juvenile Atlantic salmon from the work area.

5. All Atlantic salmon mortalities from electrofishing or other activities will be reported to the USFWS (Wende Mahaney at 827-5938, Ext. 20; FAX 827-6099; or wende_mahaney@fws.gov) and NMFS (Jeff Murphy at 866-7379; FAX 866-7342; or jeff.murphy@noaa.gov) within 48 hours of occurrence. Mortalities shall be immediately preserved (refrigerate or freeze) for delivery to the NMFS office in Orono, Maine (contact Jeff Murphy at 866-7379 to arrange for delivery).

6. To minimize the effects of entrainment and impingement from diversion pumps, Maine DOT and their contractors shall use a screen on all intake hoses with a maximum mesh size of 6.35 mm. Furthermore, Maine DOT shall insure that the approach velocity to the intake hose does not exceed 0.24 m/sec. Intake hoses shall be regularly monitored while pumping to minimize adverse effects to Atlantic salmon.

7. The Maine DOT or their contractor will follow a Spill Prevention Control and Countermeasure Plan designed to avoid effects to rivers and streams from hazardous materials associated with construction activities. This plan will be approved by appropriate Maine DOT Environmental Office staff prior to the start of construction and then carefully enforced throughout the duration of each construction project.

8. To minimize adverse effects to Atlantic salmon and ensure that salmon and other fish species are able to pass through rehabilitated culverts and that stream habitat is not fragmented, Maine DOT will monitor the efficacy of fish passage through all culverts rehabilitated by invert lining or slip lining, regardless of whether or not fish passage structures are installed (e.g., weirs). Monitoring reports shall be submitted to USFWS (Attn: Wende Mahaney, 1168 Main Street, Old Town, ME 04468) with a copy to the Corps (Attn: Jay Clement, Maine Project Office, 675 Western Avenue #3, Manchester, ME 04351).

Monitoring will be completed at the following projects: 1) Farmington PIN 15640, 2) Farmington PIN 12693, and 3) Ebeemee PIN 17088. Monitoring will follow the procedures outlined in Appendix D, except as modified below. Monitoring will be completed during the first, third, and fifth years after construction during appropriate stream flows as discussed in Appendix D. Monitoring reports will be submitted in a timely fashion that will allow for the planning and implementation of any necessary instream construction work to correct identified fish passage problems during the following July 15 to September 30 work window (unless another work window is approved by USFWS). After the fifth year monitoring report is evaluated, the USFWS will determine the need for any further monitoring or corrective measures.

9. To minimize adverse effects to Atlantic salmon and ensure that salmon and other fish species are able to pass through replacement culverts and that stream habitat is not fragmented, Maine DOT will monitor the efficacy of fish passage through the following culvert replacement projects: 1) Prentiss Township (PIN 16742); 2) Meddybemps (No PIN); 3) Weston (PIN 15968); and 4) Bradley (PIN 16687). Electro-fishing is not necessary at Prentiss unless indirect monitoring indicates there may be problems with fish passage through the new structure.

Monitoring will follow the procedures outlined in Appendix D, except as modified below. Monitoring will be completed during the first, third, and fifth years after construction during appropriate stream flows. Monitoring reports will be submitted in a timely fashion that will allow for the planning and implementation of any necessary instream construction work to correct identified fish passage problems during the following July 15 to September 30 work window (unless another work window is approved by USFWS). After the fifth year monitoring report is evaluated, the USFWS will determine the need for any further monitoring or corrective measures.

10. All cofferdams shall be removed from the stream immediately following completion of construction, allowing for minor delays due to high stream flows following heavy precipitation, so that fish and other aquatic life passage is not unnecessarily restricted. If a project is not completed but there will be substantial delays in construction, cofferdams will need to be at least partially removed to allow unobstructed passage of Atlantic salmon until construction resumes.

11. If any project proposes to use blasting, Maine DOT will submit a project-specific blasting plan to USFWS for review and approval prior to any blasting activities. This plan must demonstrate that blasting will not produce overpressure in surrounding waters that exceeds 100 kPa. These plans must be submitted at least 30 days before the anticipated blasting activities to allow for adequate review and approval by USFWS.

12. To minimize adverse effects to Atlantic salmon from pile driving, equipment operators shall conduct a few light "taps" on the pile prior to normal pile driving operations in an effort to scare Atlantic salmon and other fish away from the piles.

13. To minimize adverse effects to Atlantic salmon from water column noise produced by demolition of the existing bridge piers (likely with a hoe ram), pier demolition shall be conducted inside a cofferdam at the following projects: 1) Island Falls (PIN 15097), Oakfield (PIN 15630), and New Sharon (PIN 16719). The cofferdam does not need to be dewatered, but dewatering would serve to further reduce the amount of noise in the adjacent water column and minimize effects on Atlantic salmon.

14. To minimize adverse effects to Atlantic salmon, particularly physical injury or mortality, any piles larger than 61 cm (24 in) in diameter will be driven using one or more noise attenuation techniques. Such techniques can include (but are not limited to) an air bubble curtain and isolation of the piles within a cofferdam. Driving of piles with noise attenuation techniques shall meet the interim noise criteria of the FHWG (2008) of 206 dB_{Peak} and 187 dB SEL measured in the water at 10 m from pile.

15. Corps of Engineers staff shall carefully monitor the actions described in this opinion and document the level of incidental take to ensure that these projects are minimizing the take of Atlantic salmon. The Corps will provide the USFWS with an annual report summarizing the work done under this opinion and accounting for all cumulative take of Atlantic salmon, until such time as all projects are completed. When all construction projects are completed, the Corps shall submit a final report to the USFWS summarizing the total amount of incidental take from all projects.

Table 1. Projects being considered under the 2009 MEDOT bridge and culvert batched section 7 consultation.

No.	Project	PIN	Atlantic Salmon *DPS*	Atlantic Salmon *CH*	Stream/River	Watershed	Scope	Instream Work Window
	Rehabilitation (with/without external weirs)							
1	Farmington	15640	X	X	Abbott Brook	Sandy River	Slipline	July 15-Sept 30
2	Farmington	12693	X	X	Cascade Str.	Sandy River	Invert Line	July 15-Sept 30
3	Ebeemee		X	X	Stinking Brook	WB Pleasant	Slipline	July 15-Sept 30
4	Sebec	11487	X	X	Piscataquis	Repair	July 15-Sept 30	
	Replacement (culverts and boxes)							
5	Prentiss Twp	16742	X	X	Mud Brook	Mattawamkeag	Bridge Replacement	July 15-Sept 30
6	Meddybemps	No Pin	X	X	Unnamed Trib	Dennys River	Culvert Replacement	July 15-Sept 30
7	Weston	15968	X		Trout Brook	Mattawamkeag	Strut Replacement	July 15-Sept 30
	Bridge abutment work on stream banks (no in-channel piers)							
8	Winterport	16763	X	X	Marsh Stream	Penobscot	Bridge Replacement	July 15-Sept 30
9	New Sharon	16721	X	X	Fillibrown Brook	Sandy River	Bridge Replacement	July 15-Sept 30
	Bridge Pier(s) work with/without associated abutment work							
10	Whitneyville	16762	X	X	Machias River	Machias River	Pier Rehab	July 15-Sept 30
11	Bradley	16687	X	X	Great Works St	Penobscot	Bridge Replacement	July 15-Sept 30
12	Island Falls	15097	X	X	WB Mattawam	Mattawamkeag	Bridge Replacement	July 15-Sept 30
13	Bangor	15090	X	X	Meadow Brook	Penobscot	Bridge Replacement	Sept 1-May 1
14	Howland	15635	X	X	Piscataquis	Piscataquis	Bridge Replacement	Open
15	Oakfield	15630	X	X	Mattawamkeag	Mattawamkeag	Bridge Replacement	July 15-Sept 30
16	Norridgewock	6900.01	X	X	Kennebec	Kennebec	Bridge Replacement	Open
	Bridge Removal							
17	New Sharon	16719	X	X	Muddy Brook	Sandy River	Bridge Removal	July 15-Sept 30
	Linear Projects with Multiple Stream Crossings							
18	Sherman to Houlton	16819	X	X	Tributaries	Mattawamkeag	I-95 Reconstruction	July 15-Sept 30
19	T2R9-Veazie	15954	X	X	Unnamed Trib	Penobscot	I-95 Reconstruction	July 15-Sept 30
	New England Cottontail Project							
20	Falmouth	15094	New England Cottontail		Presumpscot R	Presumpscot R	Bridge Replacement	

Corps of Engineers Permit No. NAE-2009-00514
Permit Special Conditions Resulting From
Informal Endangered Species Act Consultation
With National Marine Fisheries Service
(Reference COE/Maine DOT Biological Assessment dated "March 2009")

1. The permittee shall implement Maine DOT Best Management Practices ("BMPs") for Erosion and Sedimentation Control for all work authorized by this permit.

2. All work authorized by this permit shall be designed in accordance with Maine DOT's 2008 Waterway and Wildlife Crossing Policy and Design Guide.

3. All projects authorized by this permit shall utilize works windows specified in Matrix 1 of the biological assessment ("BA") and as noted below:

a. Open Work Window - Mayfield Township, Garland, Waldoboro, Amherst, Canaan, Lincoln, Monroe, Ellsworth Rail Trail, Lisbon, Searsmont, Carmel, Lisbon-Sabattus, Ellsworth Rout 1A,

b. July 15 to September 30 Work Window – Brooks, Auburn Route 136, Old Town,

c. November 8 to April 9 Work Window - South Thomaston, Topsham, Sedgewick-Deer Isle,

d. Modified Work Window (July 15 to September 30 and November 8 to April 9) – Orland

e. Modified Work Window (June 1 to September 30) - Gardiner-Brunswick I-295

4. Any cofferdam constructed as part of the authorized project shall adhere to the specifications contained in Section 3.1 (Coffer Dam Descriptions) of the BA.

5. Any culvert installations authorized by this permit must adhere to the specifications contained in Section 3.1.2 (Replacement Projects) of the BA.

6. If any listed shortnose sturgeon or Atlantic salmon are encountered in the project areas of this permit, including during dewatering of cofferdams, all work must cease and NMFS shall be contacted immediately.

7. Within 90 days of permit issuance, the permittee must develop fish passage monitoring plans in consultation with NMFS, USFWS, and the Corps for any stream crossings requiring the installation of invert or slip-lined culverts. Instream work shall not begin on these projects until the monitoring plans have been approved by the Services and the Corps.

Maine DOT

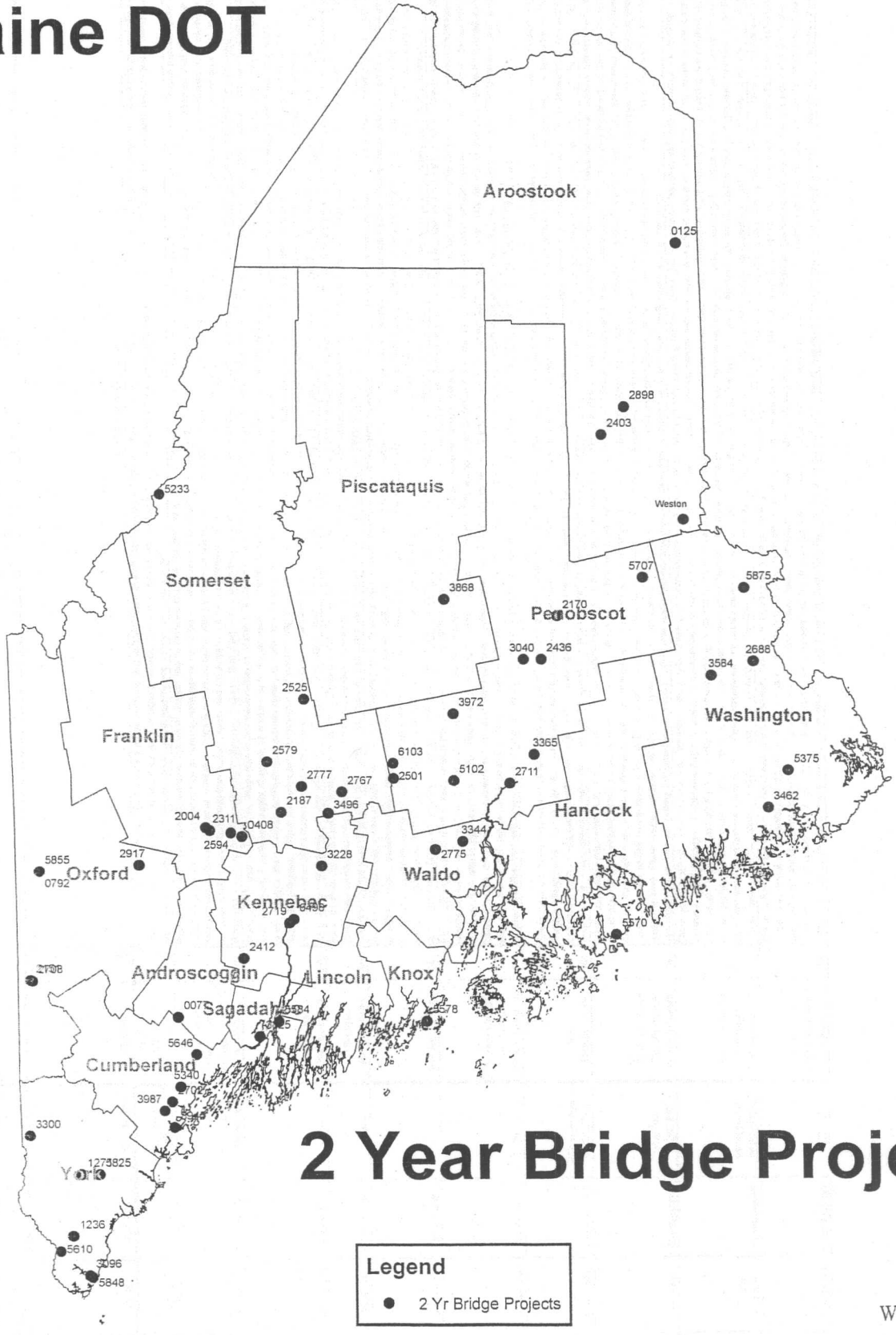

2 Year Bridge Projects

Legend

● 2 Yr Bridge Projects

N
W E
S

MAINE DOT
2 YEAR BRIDGE PROJECTS

SHEET 1 OF 7 JUNE 2009

Project Location					Project Information		
BR#	Location	Town	County	Bridge Name	Scope	On-Site Temporary Detour?	Construction Overview
0077	Old Danville Road	Auburn	Aroostook	ROYAL RIVER BRIDGE	Bridge Replacement (wider)	No	Demolish deck and rail with hydraulic hammer, remove debris from channel with clam-shell/hand labor. Remove exititing bridge beams with large excavator. Excavate for new footings and abutments behind existing abutments until it is time to demolish existing structure. Divert flow away from abutment (sandbags, Jersey barriers). Demolish abutment. Form/place footing and abutment, place riprap. Swap diversion to opposite abutment and repeat. Set beams, form/cast deck, install membrane, loam/seed, pave, stripe.
125	Richardson Road	Easton	Aroostook	PRESTILE STREAM #1	Bridge Culvert Replacement (Longer, possible removal?)	No	Place cofferdam upstream at narrowest point of stream (some clearing may be required to access cofferdam locations. Sandbags: compress substrate, minor sedimentation. Jersey barriers with sheet plastic: compress substrate, minor sedimentation) repeat downstream below outlet pool. Install diversion: most likely pump, install "sleeve" under work area to protect hose. Pump outlet installed so that discharge does not scour. Clean water pumped from above upstream cofferdam back into stream below downstream cofferdam. Dirty water within cofferdam is pumped to a cofferdam sedimentation basin. Pipe removed, new pipe/riprap installed in "dry" work area between cofferdams. The diversion pump system will be stopped and the upstream coffer dam will slowly be breached. First flush of dirty water captured by the "dirty water" pump and sent to cofferdam sedimentation basin. When the water behind downstream cofferdam is clean, that dam will be breached as well. The remainder of the upstream cofferdam and the diversion pump system will then be removed.
2403	Route 2	Island Falls	Aroostook	IRON	Bridge Replacement	No	Drive pile (H-pile or Pipe-pile, may require pre-excavation by crane with clam-shell) for temporary work trestle beside existing bridge. Drive pile to support "false-work" under structure to contain debris from deck/rail removal. Install barges, if sufficient depth of water, to contain bulk of pier demo. If there is not sufficient depth: remove center pier via open demolition with a hoe-ram from work trestle and/or blast; remove concrete from river with clam-shell. Cannot blast inside a cofferdam, generally destroys cofferdam. Repeat for other piers. Install cofferdams for new pier placement: sheet-pile, may require pre-excavation with clam-shell. Excavate for concrete seal within flooded cofferdam. Place seal concrete underwater in flooded cofferdam. Dewater cofferdam by pumping clean water into river. When water gets within a few feet of seal, pump to a cofferdam sediment basin to capture water with concrete sediment. Once dewatered, manually clean seal surface (shovels, and brooms. Once cleaned, the cofferdam can be allowed to flood at night and dewatered the next day by pumping overboard. Form, cast, and clean footing and pier in the "dry". Remove cofferdam. Repeat for other piers. Divert flow away from exiting abutments/riprap (sandbags/Jersey barriers), demo, excavate for footing, form, cast, and clean foo
2898	Main Street	Oakfield	Aroostook	Village	Bridge Replacement	No	Remove deck by saw cutting timbers and ripping with excavator, lift beams. Excavate for new footings and abutments behind existing abutments until it is time to demolish abutments.Excavate for new footings and abutments behind existing abutments until it is time to demolish existing structure. Divert flow away from abutment (sandbags, Jersey barriers). Demolish abutment. Form/place footing and abutment, place riprap. Swap diversion to opposite abutment and repeat. Set beams, form/cast deck, install membrane, loam/seed, pave, stripe.
	Bancroft Road	Weston	Aroostook		Strut Replacement	No	Place cofferdam upstream at narrowest point of stream (some clearing may be required to access cofferdam locations. Sandbags: compress substrate, minor sedimentation. Jersey barriers with sheet plastic: compress substrate, minor sedimentation) repeat downstream below outlet pool. Install diversion: most likely pump, install "sleeve" under work area to protect hose. Pump outlet installed so that discharge does not scour. Clean water pumped from above upstream cofferdam back into stream below downstream cofferdam. Dirty water within cofferdam is pumped to a cofferdam sedimentation basin. Pipe removed, new pipe/riprap installed in "dry" work area between cofferdams. The diversion pump system will be stopped and the upstream coffer dam will slowly be breached. First flush of dirty water captured by the "dirty water" pump and sent to cofferdam sedimentation basin. When the water behind downstream cofferdam is clean, that dam will be breached as well. The remainder of the upstream cofferdam and the diversion pump system will then be removed.
5340	Winn Road	Cumberland	Cumberland	RIDEOUT	Bridge Culvert Rehabilitation (Invert w/ wiers)	No	Place cofferdam upstream at narrowest point of stream (some cutting may be required to access cofferdam locations. Sandbags: compress substrate, minor sedimentation. Jersey barriers with sheet plastic: compress substrate, minor sedimentation) repeat downstream below outlet pool. Install diversion: most likely pump, install "sleeve" under work area to protect hose. Pump outlet installed so that discharge does not scour. Clean water pumped from above upstream cofferdam back into stream below downstream cofferdam. Dirty water within cofferdam is pumped to a cofferdam sedimentation basin. Place invert liner by spraying shot-crete, form and place external weirs, install riprap installed in "dry" work area between cofferdams. Block final weir outlet notch and use as containment for flushing of liner. The diversion pump system will stopped intermittently to provide flush water for liner. Flush water captured behind the last weir will be pumped to the cofferdam sedimentation basin until pH is tested to be within one pH of the receiving waters. The diversion pump system will be stopped and the upstream coffer dam will slowly be breached/removed. When the water behind downstream cofferdam is clean the downstream cofferdam will be removed.
2702	Route 26/100	Falmouth	Cumberland	RR and River CROSSING	Bridge Replacement	No	There appears to be very little in-stream work associated with this project. Pier replacement: Install cofferdams for new pier placement: sheet-pile, may require pre-excavation with clam-shell. Sandbags: compress substrate, minor sedimentation. Jersey barriers with sheet plastic: compress substrate, minor sedimentation). Excavate for concrete seal within dewatered cofferdam. Place seal concrete underwater in flooded cofferdam. Dewater cofferdam by pumping clean water into river. When water gets within a few feet of seal, pump to a cofferdam sediment basin to capture water with concrete sediment. Once dewatered, manually clean seal surface (shovels, and brooms. Once cleaned, the cofferdam can be allowed to flood at night and dewatered the next day by pumping overboard. Form, cast, and clean footing and pier in the "dry". Remove cofferdam.
5646	Hallowell Road/ Route 9	Pownal	Cumberland	POWNAL CENTER	Bridge Culvert Rehabilitation (Invert w/ wiers)	No	Place cofferdam upstream at narrowest point of stream (some cutting may be required to access cofferdam locations. Sandbags: compress substrate, minor sedimentation. Jersey barriers with sheet plastic: compress substrate, minor sedimentation) repeat downstream below outlet pool. Install diversion: most likely pump, install "sleeve" under work area to protect hose. Pump outlet installed so that discharge does not scour. Clean water pumped from above upstream cofferdam back into stream below downstream cofferdam. Dirty water within cofferdam is pumped to a cofferdam sedimentation basin. Place invert liner by spraying shot-crete, form and place external weirs, install riprap installed in "dry" work area between cofferdams. Block final weir outlet notch and use as containment for flushing of liner. The diversion pump system will stopped intermittently to provide flush water for liner. Flush water captured behind the last weir will be pumped to the cofferdam sedimentation basin until pH is tested to be within one pH of the receiving waters. The diversion pump system will be stopped and the upstream coffer dam will slowly be breached/removed. When the water behind downstream cofferdam is clean the downstream cofferdam will be removed.
3945	Route 1	South Portland	Cumberland	VETERANS MEMORIAL	**Design Build** Bridge Replacement *	??	Drive pile (H-pile or Pipe-pile, may require preexcavation by crane with clam-shell) for temporary work trestle beside existing bridge. Drive pile to support "false-work" under structure to contain demolition debris from deck/rail removal. Install barges, if suffcient depth of water, to contain bulk of pier demo. If there is not sufficent depth: remove center pier via open demolition with a ho-ram from work trestle or blast; remove concrete from river with clam-shell. Cannot blast inside a cofferdam, generally destoys cofferdam. Repeat for other piers. Install cofferdams for new pier placement: sheet-pile, may require pre-excavation with clam-shell. Excavate for concrete seal within dewatered cofferdam. Place seal concrete underwater in flooded cofferdam. Dewater cofferdam by pumping clean water into river. When water gets within a few feet of seal, pump to a cofferdam sediment basin to caputure water with concrete sediement. Once dewatered, manually clean seal surface (shovels, and brooms. Once cleaned, the cofferdam can be allowed to flood at night and dewatered the next day by pumping overboard. Form, cast, and clean footing and pier in the "dry". Remove cofferdam. Repeat for other piers. Divert flow away from exiting abutments/riprap (sandbags/Jersey barriers), demo, excavate for footing, form, cast, a
3987	E. Bridge Street	Westbrook	Cumberland	LITTLE	Arch with Natural Bottom	No	Place cofferdam upstream at narrowest point of stream (some cutting may be required to access cofferdam locations. Sandbags: compress substrate, minor sedimentation. Jersey barriers with sheet plastic: compress substrate, minor sedimentation) repeat downstream below outlet pool. Install diversion: most likely pump, install "sleeve" under work area to protect hose. Pump outlet installed so that discharge does not scour. Clean water pumped from above upstream cofferdam back into stream below downstream cofferdam. Dirty water within cofferdam is pumped to a cofferdam sedimentation basin. Remove culverts, form and cast footings, prepare streambed, and install arch in the "dry". The diversion pump system will be stopped and the upstream coffer dam will slowly be breached. First flush of dirty water captured by the "dirty water" pump and sent to cofferdam sedimentation basin. When the water behind downstream cofferdam is clean, that dam will be breached as well. The remainder of the upstream cofferdam and the diversion pump system will then be removed.

***Will apply "MaineDOT Special In-water Work Conditions" as standard practice.**

MAINE DOT
2 YEAR BRIDGE PROJECTS

SHEET 2 OF 7 JUNE 2009

Project Location					Project Information		
BR#	Location	Town	County	Bridge Name	Scope	On-Site Temporary Detour?	Construction Overview
2004	Route 4/27/43	Farmington	Franklin	Abbot	Slipline	No	Place cofferdam upstream at narrowest point of stream (some cutting may be required to access cofferdam locations. Sandbags: compress substrate, minor sedimentation. Jersey barriers with sheet plastic: compress substrate, minor sedimentation) repeat downstream below outlet pool. Install diversion: most likely pump, install "sleeve" under work area to protect hose. Pump outlet installed so that discharge does not scour. Clean water pumped from above upstream cofferdam back into stream below downstream cofferdam. Dirty water within cofferdam is pumped to a cofferdam sedimentation basin. Install liner and seal ends with only vent holes remaining. Place sheet plastic/tarps on streambed to capture any excess grout/spillage. Begin pumping grout (generally downstream to upstream). Can only place a limited amount of grout at a time as liner can float and move breaking the seals on the end. Operation needs to be closely monitored as unforeseen holes in pipe may lead to leakage. Leakage captured immediately downstream of pipe and removed from work area. Capture overflow when interstitial space is filled via vent holes. The diversion pump system will be stopped and the upstream coffer dam will slowly be breached/removed. When the water behind downstream cofferdam is clean the downstream coff
2311	Route 2/27	Farmington	Franklin	Gilbert Brook	Slipline	No	Place cofferdam upstream at narrowest point of stream (some cutting may be required to access cofferdam locations. Sandbags: compress substrate, minor sedimentation. Jersey barriers with sheet plastic: compress substrate, minor sedimentation) repeat downstream below outlet pool. Install diversion: most likely pump, install "sleeve" under work area to protect hose. Pump outlet installed so that discharge does not scour. Clean water pumped from above upstream cofferdam back into stream below downstream cofferdam. Dirty water within cofferdam is pumped to a cofferdam sedimentation basin. Install liner and seal ends with only vent holes remaining. Place sheet plastic/tarps on streambed to capture any excess grout/spillage. Begin pumping grout (generally downstream to upstream). Can only place a limited amount of grout at a time as liner can float and move breaking the seals on the end. Operation needs to be closely monitored as unforseen holes in pipe may lead to leakage. Leakage captured immediately downstream of pipe and removed from work area. Capture overflow when interstitial space is filled via vent holes. The diversion pump system will be stopped and the upstream coffer dam will slowly be breached/removed. When the water behind downstream cofferdam is clean the downstream coff
0408	Swan Road	New Sharon	Franklin	SWAN ROAD	Bridge Replacement (Possible Removal)	No	Remove deck by saw cutting timbers and ripping with excavator, lift beams. Excavate for new footings and abutments behind existing abutments until it is time to demolish abutments. Divert flow away from abutment (sandbags, Jersey barriers). Demolish abutment. Form/place footing and abutment, place riprap. Swap diversion to opposite abutment and repeat. Set beams, form/cast deck, install membrane, loam/seed, pave, stripe.
2594	Townway Road	New Sharon	Franklin	MUDDY BROOK	**Bridge Removal**	No	Drive pile to support "false-work" under structure to contain demolition debris generated by deck/rail removal. Remove deck via hydraulic hammer to expose piers. Install barges, if sufficient depth of water, to contain bulk of pier demo. If there is not sufficient depth: remove center pier via open demolition with a hydraulic hammer from work trestle or blast downs to mudline; remove concrete from river with clam-shell. Cannot blast inside a cofferdam, generally destroys cofferdam. Remove abutments by same means.
5570	Route 3	Mt Desert	Hancock	STANLEY BROOK	Bridge Replacement (Longer Span)	??	Remove deck by saw cutting timbers and ripping with excavator, lift beams. Excavate for new footings and abutments behind existing abutments until it is time to demolish abutments.Excavate for new footings and abutments behind existing abutments until it is time to demolish existing structure. Divert flow away from abutment (sandbags, Jersey barriers). Demolish abutment. Form/place footing and abutment, place riprap. Swap diversion to opposite abutment and repeat. Set beams, form/cast deck, install membrane, loam/seed, pave, stripe.
498	Blair Road	Augusta	Kennebec	BLAIR ROAD	Bridge Replacement	LAP	Remove pavement with excavator, demolish deck with hydraulic hammer and lift beams. Excavate for new footings and abutments behind existing abutments until it is time to demolish abutments. Excavate for new footings and abutments behind existing abutments until it is time to demolish existing structure. Divert flow away from abutment (sandbags, Jersey barriers). Demolish abutment. Form/place footing and abutment, place riprap. Swap diversion to opposite abutment and repeat. Set beams, form/cast deck, install membrane, loam/seed, pave, stripe.
2719	Route 100/201	Augusta	Kennebec	RIGGS	Bridge Replacement	No	Place cofferdam upstream at narrowest point of stream (some cutting may be required to access cofferdam locations. Sandbags: compress substrate, minor sedimentation. Jersey barriers with sheet plastic: compress substrate, minor sedimentation). Probably will not need a downstream cofferdam as there is a set of falls below structure. Install diversion: most likely pump, install "sleeve" under work area to protect hose. Pump outlet installed so that discharge does not scour. Clean water pumped from above upstream cofferdam back into stream below existing outlet. Dirty water within cofferdam is pumped to a cofferdam sedimentation basin. Complete Replacement work in the "dry". The diversion pump system will be stopped and the upstream coffer dam will slowly be breached.
2412	Cobbosseecontee Road	Monmouth	Kennebec	JOCK STREAM	Bridge Replacement	No	Install floating silt-boom up and downstream. Plug bridge deck drains. Saw cut deck capturing slurry. Lift bridge deck and rail with small crane/large excavator. Repeat on other span. Drill and blast pier. Remove debris with clam shell. Work behind existing abutments until it is time to demolish abutments. Contain abutment demolition and riprap placement behind floating silt boom. Demolish abutment and place riprap. Repeat other side.
3228	Garland Road	Winslow	Kennebec	MILE BROOK	**Design Build** Bridge Replacement	No	Drive pile (H-pile or Pipe-pile, may require pre-excavation by crane with clam-shell) to create a temporary work trestle beside existing bridge. Drive pile to support "false-work" under structure to contain demolition debris generated by deck/rail removal. Remove deck and rails. Clear and install access roads on both sides of stream. Place rock fill or crane mats to access piers. Hammer piers into manageable chunks, drill and blast footings, remove debris with excavator and trucks. Place fill to eliminate piers. Drive pile, form, cast footing and abutment (both sides). Span the rest of the stream. Set beams, form/cast deck, install membrane, loam/seed, pave, stripe.
5578	Island Road	South Thomaston	Knox	SPRUCE HEAD	Bridge Replacement	Yes	Build temporary abutments with sheetpile/riprap fill. Drive temporary piles (H-pile, pipe-pile) bents for temporary detour. Set old bridge beams and install precast concrete panels to create temporary bridge deck. Work tides and behind existing abutments until it is time to demolish abutments. Divert low flow with sandbags away from abutment/riprap. Demolish abutment and place riprap at low tide. Swap sandbags to opposite abutment and repeat.
2151	Shave Hill Road	Fryeburg	Oxford	CHARLES RIVER	Replacement or Bridge Removal	No	Drive pile to support "false-work" under structure to contain demolition debris generated by deck/rail removal. Remove deck and rails. Drive pile to create rail system. Install large roller system on existing bridge beams. Jack beams above existing abutments and roll beams onto shore to be dismantled. Divert flow with sandbags away from abutment/riprap. Demolish existing abutment. Build new abutment and place riprap in the "dry".
2708	McNeil Road	Fryeburg	Oxford	RED IRON	Bridge Replacement or Bridge Removal	No	Drive pile to support "false-work" under structure to contain demolition debris generated by deck/rail removal. Remove deck and rails. Surround pier with barges to access bearings on pier and contain debris. Disconnect bearings from beams, and lift beams with crane. Hammer concrete pier cap. Pull piles that make-up pier foundation. Divert flow with sandbags away from abutment/riprap. Demolish existing abutment. Build new abutment and place riprap in the "dry". Dive pile bent for new pier. Form, cast, and finish pier cap from barge. Set beams, form, place, and finish deck.
2917	Route 2	Mexico	Oxford	WEBB RIVER	Bridge Replacement (Longer Span)	No	Build Temporary abutments with Jersey barriers/concrete "waste" blocks. Line with geotextile and backfill with granular material. Set beams, place pre-cast concrete deck panels, and install temporary rail. Demolish deck and rail with hydraulic hammer, remove debris from channel with clam-shell/hand labor. Excavate for new footings and abutments behind existing abutments until it is time to demolish existing abutment. Divert flow away from abutment (sandbags, Jersey barriers). Demolish abutment. Form/place footing and abutment, place riprap. Swap diversion to opposite abutment and repeat. Set beams, form/cast deck, install membrane, loam/seed, pave, stripe.

***Will apply "MaineDOT Special In-water Work Conditions" as standard practice.**

MAINE DOT
2 YEAR BRIDGE PROJECTS

SHEET 3 OF 7 JUNE 2009

Project Location					Project Information		
BR#	Location	Town	County	Bridge Name	Scope	On-Site Temporary Detour?	Construction Overview
5855	Cobern Fields Road	Riley Twp	Oxford	BULL BRANCH	Replacement (Possible Rehabilitation)	No	Remove wooden deck cut saw cutting and removing with an excavator. Excavate for new footings and abutments behind existing abutments until it is time to demolish existing structure. Divert flow with sandbags away from abutment. Demolish abutment with hyraulic hammer. Form/place footing and abutment, place riprap. Swap sandbags to opposite abutment and repeat. Set beams, form/cast deck (possibly wood). Loam and seed.
0792	Cobern Fields Road	Riley Twp	Oxford	BULL BRANCH #2	Replacement (Possible Rehabilitation)	No	Remove wooden deck cut saw cutting and removing with an excavator. Excavate for new footings and abutments behind existing abutments until it is time to demolish existing structure. Divert flow with sandbags away from abutment. Demolish abutment with hyraulic hammer. Form/place footing and abutment, place riprap. Swap sandbags to opposite abutment and repeat. Set beams, form/cast deck (possibly wood). Loam and seed.
2711	Route 2	Bangor	Penobscot	Red	Bridge Replacement	No	Place cofferdam upstream at narrowest point of stream (some cutting may be required to access cofferdam locations. Sandbags: compress substrate, minor sedimentation. Jersey barriers with sheet plastic: compress substrate, minor sedimentation) repeat downstream below outlet pool. Install diversion: most likely pump, install "sleeve" under work area to protect hose; intake installed in sump surrounded by small plastic perforated riser filled with crushed stone to prevent clogging. Pump outlet installed so that discharge does not scour. Clean water pumped from above upstream cofferdam back into stream below downstream cofferdam. Dirty water within cofferdam is pumped to a cofferdam sedimentation basin. Bridge removed, new bridge/riprap installed in "dry" work area between cofferdams. The diversion pump system will be stopped and the upstream coffer dam will slowly be breached. First flush of dirty water captured by the "dirty water" pump and sent to cofferdam sedimentation basin. When the water behind downstream cofferdam is clean, that dam will be breached as well. The remainder of the upstream cofferdam and the diversion pump system will then be removed.
3365	Cram Street	Bradley	Penobscot	JENKINS (CRAM STREET)	Bridge Replacement (In-kind or possble span)	??	Place cofferdam upstream at narrowest point of stream (some cutting may be required to access cofferdam locations. Sandbags: compress substrate, minor sedimentation. Jersey barriers with sheet plastic: compress substrate, minor sedimentation) repeat downstream below outlet pool. Install diversion: most likely pump, install "sleeve" under work area to protect hose; intake installed in sump surrounded by small plastic perforated riser filled with crushed stone to prevent clogging. Pump outlet installed so that discharge does not scour. Clean water pumped from above upstream cofferdam back into stream below downstream cofferdam. Dirty water within cofferdam is pumped to a cofferdam sedimentation basin. Bridge removed, new bridge/riprap installed in "dry" work area between cofferdams. The diversion pump system will be stopped and the upstream coffer dam will slowly be breached. First flush of dirty water captured by the "dirty water" pump and sent to cofferdam sedimentation basin. When the water behind downstream cofferdam is clean, that dam will be breached as well. The remainder of the upstream cofferdam and the diversion pump system will then be removed.
5102	Fuller Road	Carmel	Penobscot	Norton	Bridge Replacement	No	Demolish deck and rail with hydraulic hammer, remove debris from channel with clam-shell/hand labor. Excavate for new footings and abutments behind existing abutments until it is time to demolish existing abutment. Divert flow away from abutment (sandbags, Jersey barriers). In this case, divert flow to one side of the center pier. Demolish abutment and place riprap. Swap sandbags to opposite side of center pier. Demolish abutment/place riprap. Install barges, if sufficient depth of water, to contain bulk of pier demo. If there is not sufficient depth: remove center pier via open demolition with a hydraulic hammer from work trestle or blast; remove concrete from resource with clam-shell. Set beams, form/cast deck, install membrane and wearing surface, loam and seed.
3972	Bradford Road	Charleston	Penobscot	RICHARDS	Bridge Culvert Rehabilitation (slip line or possible replacement)	No	Place cofferdam upstream at narrowest point of stream (some cutting may be required to access cofferdam locations. Sandbags: compress substrate, minor sedimentation. Jersey barriers with sheet plastic: compress substrate, minor sedimentation) repeat downstream below outlet pool. Install diversion: most likely pump, install "sleeve" under work area to protect hose. Pump outlet installed so that discharge does not scour. Clean water pumped from above upstream cofferdam back into stream below downstream cofferdam. Dirty water within cofferdam is pumped to a cofferdam sedimentation basin. Install liner and seal ends with only vent holes remaining. Place sheet plastic/tarps on streambed to capture any excess grout/spillage. Begin pumping grout (generally downstream to upstream). Can only place a limited amount of grout at a time as liner can float and move breaking the seals on the end. Operation needs to be closely monitored as unforeseen holes in pipe may lead to leakage. Leakage captured immediately downstream of pipe and removed from work area. Capture overflow when interstitial space is filled via vent holes. The diversion pump system will be stopped and the upstream coffer dam will slowly be breached/removed. When the water behind downstream cofferdam is clean the downstream coff
2436	Caribou Road	Enfield	Penobscot	Kimball	Bridge Replacement		Place cofferdam upstream at narrowest point of stream (some cutting may be required to access cofferdam locations. Sandbags: compress substrate, minor sedimentation. Jersey barriers with sheet plastic: compress substrate, minor sedimentation) repeat downstream below outlet pool. Install diversion: most likely pump, install "sleeve" under work area to protect hose; intake installed in sump surrounded by small plastic perforated riser filled with crushed stone to prevent clogging. Pump outlet installed so that discharge does not scour. Clean water pumped from above upstream cofferdam back into stream below downstream cofferdam. Dirty water within cofferdam is pumped to a cofferdam sedimentation basin. Pipe removed, new pipe/riprap installed in "dry" work area between cofferdams. The diversion pump system will be stopped and the upstream coffer dam will slowly be breached. First flush of dirty water captured by the "dirty water" pump and sent to cofferdam sedimentation basin. When the water behind downstream cofferdam is clean, that dam will be breached as well. The remainder of the upstream cofferdam and the diversion pump system will then be removed.
3040	Coffin Street/ Route 116	Howland	Penobscot	PISCATAQUIS	**Design Build** Bridge Replacement	No	Build temporary abutments with sheetpile/riprap fill. Drive pile (H-pile or Pipe-pile, may require pre-excavation by crane with clam-shell) to create a temporary work trestle beside existing bridge. Drive pile to create rail system. Install large roller system on existing bridge beams and shear mechanical connections between trusses and piers. Jack beams above existing abutments and roll trusses onto shore to be dismantled. Install cofferdams for new pier placement: sheet-pile, may require pre-excavation with clam-shell. Excavate for concrete seal within dewatered cofferdam. Place seal concrete underwater in flooded cofferdam. Dewater cofferdam by pumping clean water into river. When water gets within a few feet of seal, pump to a cofferdam sediment basin to capture water with concrete sediment. Once dewatered, manually clean seal surface (shovels, and brooms. Once cleaned, the cofferdam can be allowed to flood at night and dewatered the next day by pumping overboard. Form, cast, and clean footing and pier in the "dry". Remove cofferdam. Repeat for other piers. Set beams, form/cast deck, install membrane, pave, loam and seed.
2170	Route 2	Lincoln	Penobscot	COMBELLASSIE	Bridge Replacement w/ pipe or box	No	Place cofferdam upstream at narrowest point of stream (some cutting may be required to access cofferdam locations. Sandbags: compress substrate, minor sedimentation. Jersey barriers with sheet plastic: compress substrate, minor sedimentation) repeat downstream below outlet pool. Install diversion: most likely pump, install "sleeve" under work area to protect hose. Pump outlet installed so that discharge does not scour. Clean water pumped from above upstream cofferdam back into stream below downstream cofferdam. Dirty water within cofferdam is pumped to a cofferdam sedimentation basin. Demolish structure and remove debris. Undercut existing material, install new "bed", pipe/box and riprap installed in "dry" work area between cofferdams. The diversion pump system will be stopped and the upstream coffer dam will slowly be breached. First flush of dirty water captured by the "dirty water" pump and sent to cofferdam sedimentation basin. When the water behind downstream cofferdam is clean, that dam will be breached as well. The remainder of the upstream cofferdam and the diversion pump system will then be removed.
2501	Route 2	Newport	Penobscot	Main Street	Bridge Replacement	No	Install large pumping system. Drive sheetpile cofferdam upstream of structure. Dewater area between sheetpile cofferdam and permanent dam downstream. Use pumps to maintain downstream flow during low flows. Allow for flood events by pulling sheets if required. Demolish and construct in the dry.
6103	Moosehead Trail/ Route 7/11	Newport	Penobscot	MULLIGAN STREAM	Bridge Culvert Replacement	No	Place cofferdam upstream at narrowest point of stream (some cutting may be required to access cofferdam locations. Sandbags: compress substrate, minor sedimentation. Jersey barriers with sheet plastic: compress substrate, minor sedimentation) repeat downstream below outlet pool. Install diversion: most likely pump, install "sleeve" under work area to protect hose; intake installed in sump surrounded by small plastic perforated riser filled with crushed stone to prevent clogging. Pump outlet installed so that discharge does not scour. Clean water pumped from above upstream cofferdam back into stream below downstream cofferdam. Dirty water within cofferdam is pumped to a cofferdam sedimentation basin. Demolish structure and remove debris. Undercut existing material, install new "bed", pipe/box and riprap installed in "dry" work area between cofferdams. The diversion pump system will be stopped and the upstream coffer dam will slowly be breached. First flush of dirty water captured by the "dirty water" pump and sent to cofferdam sedimentation basin. When the water behind downstream cofferdam is clean, that dam will be breached as well. The remainder of the upstream cofferdam and the diversion pump system will then be removed.

***Will apply "MaineDOT Special In-water Work Conditions" as standard practice.**

Project Location					Project Information		
BR#	Location	Town	County	Bridge Name	Scope	On-Site Temporary Detour?	Construction Overview
5707	Center Street/ Route 171	Prentiss Twp	Penobscot	LITTLE MUD BROOK	Bridge Replacement (arch w/ longer sturcture)	No	Place cofferdam upstream at narrowest point of stream (some cutting may be required to access cofferdam locations. Sandbags: compress substrate, minor sedimentation. Jersey barriers with sheet plastic: compress substrate, minor sedimentation) repeat downstream below outlet pool. Install diversion: most likely pump, install "sleeve" under work area to protect hose; intake installed in sump surrounded by small plastic perforated riser filled with crushed stone to prevent clogging. Pump outlet installed so that discharge does not scour. Clean water pumped from above upstream cofferdam back into stream below downstream cofferdam. Dirty water within cofferdam is pumped to a cofferdam sedimentation basin. Demolish structure and remove debris. Undercut existing material, install new "bed", pipe/box and riprap installed in "dry" work area between cofferdams. The diversion pump system will be stopped and the upstream coffer dam will slowly be breached. First flush of dirty water captured by the "dirty water" pump and sent to cofferdam sedimentation basin. When the water behind downstream cofferdam is clean, that dam will be breached as well. The remainder of the upstream cofferdam and the diversion pump system will then be removed.
3868	Route 11	Ebeemee (T5 R9 NWP)	Piscataquis	Stinking Brook Bridge	Slipline w/ weirs	No	Place cofferdam upstream at narrowest point of stream (some cutting may be required to access cofferdam locations. Sandbags: compress substrate, minor sedimentation. Jersey barriers with sheet plastic: compress substrate, minor sedimentation) repeat downstream below outlet pool. Install diversion: most likely pump, install "sleeve" under work area to protect hose; intake installed in sump surrounded by small plastic perforated riser filled with crushed stone to prevent clogging. Pump outlet installed so that discharge does not scour. Clean water pumped from above upstream cofferdam back into stream below downstream cofferdam. Dirty water within cofferdam is pumped to a cofferdam sedimentation basin. Place invert liner by spraying shot-crete, form and place external weirs, install riprap installed in "dry" work area between cofferdams. Block final weir outlet notch and use as containment for flushing of liner. The diversion pump system will stopped intermittently to provide flush water for liner. Flush water captured behind the last weir will be pumped to the cofferdam sedimentation basin until pH is tested to be within one pH of the receiving waters. The diversion pump system will be stopped and the upstream coffer dam will slowly be breached/removed. When the water behind downstream cofferdam
3825	Foreside Road	Topsham	Sagadahoc	MUDDY RIVER	Bridge Substructure Rehabilitation	No	Build temporary access by placing Jersey barriers/driving sheets, lining with geotextile and placing stone fill. Drive pile on both sides of bridge and on either side of pier, slide beams under bridge creating temporary piers. Remove existing pier with chainsaw to mudline. Install sandbag/Jersey barrier around pier "footing". Excavate for new pier from access road. Place distribution slab (like a seal using excavated hole as "form" instead of sheetpile. Form/cast footing, form cast pier shaft and cap. Place riprap around new pier. Remove temporary piers. Build temporary access road with Jersey barriers, geotextile and granular fill. Divert flow away from abutments with sandbags or Jersey barriers and sheet plastic, remove spalling concrete with rock-hammers/small hydraulic hammer, form/cast abutment repairs, finish concrete, place riprap, and remove cofferdam.
5584	River Road/ Route 128	Woolwich	Sagadahoc	CHOPPS CREEK	Bridge Culvert Rehabilitation (Invert w/ wiers)	No	Place cofferdam upstream at narrowest point of stream (some cutting may be required to access cofferdam locations. Sandbags: compress substrate, minor sedimentation. Jersey barriers with sheet plastic: compress substrate, minor sedimentation) repeat downstream below outlet pool. Install diversion: most likely pump, install "sleeve" under work area to protect hose. Pump outlet installed so that discharge does not scour. Clean water pumped from above upstream cofferdam back into stream below downstream cofferdam. Dirty water within cofferdam is pumped to a cofferdam sedimentation basin. Place invert liner by spraying shot-crete, form and place external weirs, install riprap installed in "dry" work area between cofferdams. Block final weir outlet notch and use as containment for flushing of liner. The diversion pump system will stopped intermittently to provide flush water for liner. Flush water captured behind the last weir will be pumped to the cofferdam sedimentation basin until pH is tested to be within one pH of the receiving waters. The diversion pump system will be stopped and the upstream coffer dam will slowly be breached/removed. When the water behind downstream cofferdam is clean the downstream cofferdam will be removed.
2767	Route 2	Canaan	Somerset	SIBLEY POND	**Design Build** Bridge Replacement	Yes	Construct new structure on new alignment, leaving old structure as detour. Work from barges. Drive pipe piles to refusal for foundation. Install floating boom around piles, Air-lift to clean piles, install re-bar "cages", fill with concrete. Form, cast and finish pier caps, set, beams. Form/cast deck, install membrane, pave, loam and seed. Put traffic on new structure. Move barges under old structure to contain demolition debris. If the debris is falling from too great a height (can destroy a barge): plug bridge drains, saw cut into manageable pieces and lift out with crane. Pull existing piles if possible, if not, cut underwater by diver at mudline.
3496	Route 23	Canaan	Somerset	HASKELL	In-kind Bridge Replacement	No	Place cofferdam upstream at narrowest point of stream (some cutting may be required to access cofferdam locations. Sandbags: compress substrate, minor sedimentation. Jersey barriers with sheet plastic: compress substrate, minor sedimentation) repeat downstream below outlet pool. Install diversion: most likely pump, install "sleeve" under work area to protect hose. Pump outlet installed so that discharge does not scour. Clean water pumped from above upstream cofferdam back into stream below downstream cofferdam. Dirty water within cofferdam is pumped to a cofferdam sedimentation basin. Demolish structure and remove debris. Undercut existing material, install new "bed", pipe/box and riprap installed in "dry" work area between cofferdams. The diversion pump system will be stopped and the upstream coffer dam will slowly be breached. First flush of dirty water captured by the "dirty water" pump and sent to cofferdam sedimentation basin. When the water behind downstream cofferdam is clean, that dam will be breached as well. The remainder of the upstream cofferdam and the diversion pump system will then be removed.
2579	Route 201A/8/16	Embden	Somerset	MOORE	Bridge Replacement Staged Construction	No	Place cofferdam upstream at narrowest point of stream (some cutting may be required to access cofferdam locations. Sandbags: compress substrate, minor sedimentation. Jersey barriers with sheet plastic: compress substrate, minor sedimentation) repeat downstream below outlet pool. Install diversion: most likely pump, install "sleeve" under work area to protect hose. Pump outlet installed so that discharge does not scour. Clean water pumped from above upstream cofferdam back into stream below downstream cofferdam. Dirty water within cofferdam is pumped to a cofferdam sedimentation basin. Demolish structure and remove debris. Undercut existing material, install new "bed", pipe/box and riprap installed in "dry" work area between cofferdams. The diversion pump system will be stopped and the upstream coffer dam will slowly be breached. First flush of dirty water captured by the "dirty water" pump and sent to cofferdam sedimentation basin. When the water behind downstream cofferdam is clean, that dam will be breached as well. The remainder of the upstream cofferdam and the diversion pump system will then be removed.
2525	Route 16	Mayfield Twp	Somerset	MAYFIELD	Bridge Culvert Rehabilitation (Invert w/ wiers)	No	Place cofferdam upstream at narrowest point of stream (some cutting may be required to access cofferdam locations. Sandbags: compress substrate, minor sedimentation. Jersey barriers with sheet plastic: compress substrate, minor sedimentation) repeat downstream below outlet pool. Install diversion: most likely pump, install "sleeve" under work area to protect hose. Pump outlet installed so that discharge does not scour. Clean water pumped from above upstream cofferdam back into stream below downstream cofferdam. Dirty water within cofferdam is pumped to a cofferdam sedimentation basin. Place invert liner by spraying shot-crete, form and place external weirs, install riprap installed in "dry" work area between cofferdams. Block final weir outlet notch and use as containment for flushing of liner. The diversion pump system will stopped intermittently to provide flush water for liner. Flush water captured behind the last weir will be pumped to the cofferdam sedimentation basin until pH is tested to be within one pH of the receiving waters. The diversion pump system will be stopped and the upstream coffer dam will slowly be breached/removed. When the water behind downstream cofferdam is clean the downstream cofferdam will be removed.
2187	Route 2	Norridgewock	Somerset	Covered	Bridge Replacement	Yes	Build temporary abutments with sheetpile/riprap fill. Drive temporary piles (H-pile, pipe-pile) bents for temporary detour. Set old bridge beams and install precast concrete panels to create temporary bridge deck. Construct false-work under structure to be demolished to catch debris from deck. Demolish arches, deck and piers with hydraulic hammer. Remove demolition debris from ice via hand labor or small machine. Drill and blast piers. Remove rubble with a clam-shell when excavating for riprap. Install cofferdams for new pier placement: sheet-pile, may require pre-excavation with clam-shell. Excavate for concrete seal within dewatered cofferdam. Place seal concrete underwater in flooded cofferdam. Dewater cofferdam by pumping clean water into river. When water gets within a few feet of seal, pump to a cofferdam sediment basin to capture water with concrete sediment. Once dewatered, manually clean seal surface (shovels, and brooms. Once cleaned, the cofferdam can be allowed to flood at night and dewatered the next day by pumping overboard. Form, cast, and clean footing and pier in the "dry". Remove cofferdam. Repeat for other piers. Set beams, form/cast deck, install membrane, pave, loam and seed.

***Will apply "MaineDOT Special In-water Work Conditions" as standard practice.**

MAINE DOT
2 YEAR BRIDGE PROJECTS

SHEET 5 OF 7 JUNE 2009

Project Location					Project Information		
BR#	Location	Town	County	Bridge Name	Scope	On-Site Temporary Detour?	Construction Overview
5233	Route 201	Sandy Bay Twp	Somerset	KELLEY BROOK 2	Bridge Replacement	No	Place cofferdam upstream at narrowest point of stream (some cutting may be required to access cofferdam locations. Sandbags: compress substrate, minor sedimentation. Jersey barriers with sheet plastic: compress substrate, minor sedimentation) repeat downstream below outlet pool. Install diversion: most likely pump, install "sleeve" under work area to protect hose. Pump outlet installed so that discharge does not scour. Clean water pumped from above upstream cofferdam back into stream below downstream cofferdam. Dirty water within cofferdam is pumped to a cofferdam sedimentation basin. Demolish structure and remove debris. Undercut existing material, install new "bed", pipe/box and riprap installed in "dry" work area between cofferdams. The diversion pump system will be stopped and the upstream coffer dam will slowly be breached. First flush of dirty water captured by the "dirty water" pump and sent to cofferdam sedimentation basin. When the water behind downstream cofferdam is clean, that dam will be breached as well. The remainder of the upstream cofferdam and the diversion pump system will then be removed.
2777	Hilton Hill Road	Skowhegan	Somerset	SMITH POND (OLD)	Bridge Removal	No	Place barge/float under deck to contain debris and demolish with Hydraulic hammer to remove deck and rail. Lift beams off abutments. Excavate behind abutments, "crack" abutments with hydraulic hammer, pull pieces of abutment away from pond. Remove to water level, cover with riprap, final grading of slopes, loam and seed.
2775	Route 139	Monroe	Waldo	SMITH	Bridge Replacement w/ pipe or box (longer/deeper)	No	Place cofferdam upstream at narrowest point of stream (some cutting may be required to access cofferdam locations. Sandbags: compress substrate, minor sedimentation. Jersey barriers with sheet plastic: compress substrate, minor sedimentation) repeat downstream below outlet pool. Install diversion: most likely pump, install "sleeve" under work area to protect hose. Pump outlet installed so that discharge does not scour. Clean water pumped from above upstream cofferdam back into stream below downstream cofferdam. Dirty water within cofferdam is pumped to a cofferdam sedimentation basin. Demolish structure and remove debris. Undercut existing material, install new "bed", pipe/box and riprap installed in "dry" work area between cofferdams. The diversion pump system will be stopped and the upstream coffer dam will slowly be breached. First flush of dirty water captured by the "dirty water" pump and sent to cofferdam sedimentation basin. When the water behind downstream cofferdam is clean, that dam will be breached as well. The remainder of the upstream cofferdam and the diversion pump system will then be removed.
3344	Loggin Road	Winterport	Waldo	TIBBETTS	Bridge Replacement	No	After suspending false-work from existing structure, demolish deck and rail with hydraulic hammer and catch the debris on false work. Excavate for new footings and abutments behind existing abutments until it is time to demolish existing abutment. Divert flow away from abutment (sandbags/Jersey barriers). Demolish abutment with hydraulic hammer. Form/place footing and abutment, place riprap. Swap diversion to opposite abutment and repeat. Set beams, form/cast deck, install membrane, loam/seed, pave, stripe.
5875	Vanceboro Road/ Route 6	Codyville Plt	Washington	BEAVER BROOK	Bridge Culvert Rehabilitation (Invert w/ wiers)	No	Place cofferdam upstream at narrowest point of stream (some cutting may be required to access cofferdam locations. Sandbags: compress substrate, minor sedimentation. Jersey barriers with sheet plastic: compress substrate, minor sedimentation) repeat downstream below outlet pool. Install diversion: most likely pump, install "sleeve" under work area to protect hose. Pump outlet installed so that discharge does not scour. Clean water pumped from above upstream cofferdam back into stream below downstream cofferdam. Dirty water within cofferdam is pumped to a cofferdam sedimentation basin. Place invert liner by spraying shot-crete, form and place external weirs, install riprap installed in "dry" work area between cofferdams. Block final weir outlet notch and use as containment for flushing of liner. The diversion pump system will stopped intermittently to provide flush water for liner. Flush water captured behind the last weir will be pumped to the cofferdam sedimentation basin until pH is tested to be within one pH of the receiving waters. The diversion pump system will be stopped and the upstream coffer dam will slowly be breached/removed. When the water behind downstream cofferdam is clean the downstream cofferdam will be removed.
3584	Milford Street	Grand Lake Stream Plt	Washington	MILFORD STREET	Bridge Replacement (wider w/ longer span)	No	Demolish deck and rail with hydraulic hammer, remove debris from channel with clam-shell/hand labor. Excavate for new footings and abutments behind existing abutments until it is time to demolish existing abutment. Divert flow away from abutment (sandbags/Jersey barriers). Demolish abutment with hydraulic hammer. Form/place footing and abutment, place riprap. Swap diversion to opposite abutment and repeat. Set beams, form/cast deck, install membrane, loam/seed, pave, stripe.
2688	Calais Road, Route 1	Princeton	Washington	PRINCETON	Bridge Replacement (wider structure)	Most Likely	Build Temporary abutments with Jersey barriers/concrete "waste" blocks. Line with geotextile and backfill with granular material. Set beams, place pre-cast concrete deck panels, and install temporary rail. Excavate for new footings and abutments behind existing abutments until it is time to demolish existing structure. Divert flow with sandbags away from abutment. Demolish abutment. Form/place footing and abutment, place riprap. Swap sandbags to opposite abutment and repeat. Set beams, form/cast deck, install membrane, loam/seed, pave, stripe.
5375	Route 191	Twp 18 Ed Bpp	Washington	SOUTHERN INLET	Bridge Culvert Replacement (longer pipe or box)	No	Place cofferdam upstream at narrowest point of stream (some cutting may be required to access cofferdam locations. Sandbags: compress substrate, minor sedimentation. Jersey barriers with sheet plastic: compress substrate, minor sedimentation) repeat downstream below outlet pool. Install diversion: most likely pump, install "sleeve" under work area to protect hose. Pump outlet installed so that discharge does not scour. Clean water pumped from above upstream cofferdam back into stream below downstream cofferdam. Dirty water within cofferdam is pumped to a cofferdam sedimentation basin. Demolish structure and remove debris. Undercut existing material, install new "bed", pipe/box and riprap installed in "dry" work area between cofferdams. The diversion pump system will be stopped and the upstream coffer dam will slowly be breached. First flush of dirty water captured by the "dirty water" pump and sent to cofferdam sedimentation basin. When the water behind downstream cofferdam is clean, that dam will be breached as well. The remainder of the upstream cofferdam and the diversion pump system will then be removed.
3462	Route 1A	Whitneyville	Washington	MACHIAS RIVER	Bridge Substructure Rehabilitation	No	Build temporary abutments with sheetpile/granular fill. Drive pile (H-pile or Pipe-pile, may require pre-excavation by crane with clam-shell) to create a temporary work trestle(s) beside existing bridge. Remove spalling concrete with hand-held rock hammers. Remove debris by hand. Insert dowels in good concrete and build forms. Pump concrete from temporary trestle. Remove forms and finish concrete. Place riprap from temporary trestle(s).
3300	Acton Bridge Road	Acton	York	BALCH MILLS	In-kind Bridge Culvert Replacement	No	substrate, minor sedimentation) repeat downstream below outlet pool. Install diversion: most likely pump, install "sleeve" under work area to protect hose. Pump outlet installed so that discharge does not scour. Clean water pumped from above upstream cofferdam back into stream below downstream cofferdam. Dirty water within cofferdam is pumped to a cofferdam sedimentation basin. Demolish structure and remove debris. Undercut existing material, install new "bed", pipe/box and riprap installed in "dry" work area between cofferdams. The diversion pump system will be stopped and the upstream coffer dam will slowly be breached. First flush of dirty water captured by the "dirty water" pump and sent to cofferdam sedimentation basin. When the water behind downstream cofferdam is clean, that dam will be breached as well. The remainder of the upstream cofferdam and the diversion pump system will then be removed.
1271	Back Road	Alfred	York	NUTTER'S	Bridge Replacement (wider w/ longer span)	No	Demolish deck and rail with hydraulic hammer, remove debris from channel with clam-shell/hand labor. Excavate for new footings and abutments behind existing abutments until it is time to demolish existing abutment. Divert flow away from abutment (sandbags/Jersey barriers). Demolish abutment with hydraulic hammer. Form/place footing and abutment, place riprap. Swap diversion to opposite abutment and repeat. Set beams, form/cast deck, install membrane, loam/seed, pave, stripe.
5825	Alfred Road/ Route 111	Lyman	York	KENNEBUNK RIVER	Bridge Culvert Rehabilitation (Invert w/ wiers)	No	Place cofferdam upstream at narrowest point of stream (some cutting may be required to access cofferdam locations. Sandbags: compress substrate, minor sedimentation. Jersey barriers with sheet plastic: compress substrate, minor sedimentation) repeat downstream below outlet pool. Install diversion: most likely pump, install "sleeve" under work area to protect hose. Pump outlet installed so that discharge does not scour. Clean water pumped from above upstream cofferdam back into stream below downstream cofferdam. Dirty water within cofferdam is pumped to a cofferdam sedimentation basin. Place invert liner by spraying shot-crete, form and place external weirs, install riprap installed in "dry" work area between cofferdams. Block final weir outlet notch and use as containment for flushing of liner. The diversion pump system will stopped intermittently to provide flush water for liner. Flush water captured behind the last weir will be pumped to the cofferdam sedimentation basin until pH is tested to be within one pH of the receiving waters. The diversion pump system will be stopped and the upstream coffer dam will slowly be breached/removed. When the water behind downstream cofferdam is clean the downstream cofferdam will be removed.

***Will apply "MaineDOT Special In-water Work Conditions" as standard practice.**

MAINE DOT
2 YEAR BRIDGE PROJECTS

SHEET 6 OF 7 JUNE 2009

Project Location					Project Information		
BR#	Location	Town	County	Bridge Name	Scope	On-Site Temporary Detour?	Construction Overview
1236	Great Hill Road	South Berwick	York	GREAT HILL BR	Replacement (longer span w/ slight re-alignment)	??	Remove wooden deck cut saw cutting and removing with an excavator. Excavate for new footings and abutments behind existing abutments until it is time to demolish existing structure. Divert flow with sandbags away from abutment. Demolish abutment with hyraulic hammer.Form/place footing and abutment, place riprap. Swap diversion to opposite abutment and repeat. Set beams, form/cast deck, install membrane, loam/seed, pave, stripe.
5610	Dow Highway/ Route 236	South Berwick	York	GREAT WORKS RIVER	Bridge Replacement	No	Place barge/float under deck to contain debris and demolish with Hydraulic hammer to remove deck and rail. Lift beams off abutments. Excavate behind abutments, "crack" abutments with hydraulic hammer, pull pieces of abutment away from River down just above water level. Divert flow with sandbags away from remaining abutment/footing. Demolish abutment/footing. Form/place footing and abutment, place riprap. Swap sandbags to opposite abutment and repeat. Set beams, form/cast deck, install membrane, loam/seed, pave, stripe.
3096	Organug Road	York	York	SEWALLS	Bridge Rehabilitation	No	Build temporary access by placing Jersey barriers/driving sheets, lining with geotextile and placing stone fill. Drive pile on both sides of bridge and on either side of pier, slide beams under bridge creating temporary piers. Remove existing pier with chainsaw to mudline. Install sandbag/Jersey barrier around pier "footing". Excavate for new pier from access road. Place distribution slab (like a seal using excavated hole as "form" instead of sheetpile. Form/cast footing, form cast pier shaft and cap. Place riprap around new pier. Remove temporary piers. Build temporary access road with Jersey barriers, geotextile and granular fill. Divert flow away from abutments with sandbags or Jersey barriers and sheet plastic, remove spalling concrete with rock-hammers/small hydraulic hammer, form/cast abutment repairs, finish concrete, place riprap, and remove cofferdam.
5848	Route 103	York	York	Station 34	Bridge Replacement with Box Culvert	No	Place cofferdam upstream at narrowest point of stream (some cutting may be required to access cofferdam locations. Sandbags: compress substrate, minor sedimentation. Jersey barriers with sheet plastic: compress substrate, minor sedimentation) repeat downstream below outlet pool. Install diversion: most likely pump, install "sleeve" under work area to protect hose. Pump outlet installed so that discharge does not scour. Clean water pumped from above upstream cofferdam back into stream below downstream cofferdam. Dirty water within cofferdam is pumped to a cofferdam sedimentation basin. Demolish structure and remove debris. Undercut existing material, install new "bed", pipe/box and riprap installed in "dry" work area between cofferdams. The diversion pump system will be stopped and the upstream coffer dam will slowly be breached. First flush of dirty water captured by the "dirty water" pump and sent to cofferdam sedimentation basin. When the water behind downstream cofferdam is clean, that dam will be breached as well. The remainder of the upstream cofferdam and the diversion pump system will then be removed.

*Will apply "MaineDOT Special In-water Work Conditions" as standard practice.

MAINE DOT
2 YEAR BRIDGE PROJECTS

SHEET 7 OF 7 JUNE 2009

MEMORANDUM OF AGREEMENT

AMONG THE UNITED STATES ARMY CORPS OF ENGINEERS, NEW ENGLAND DISTRICT,

THE MAINE STATE HISTORIC PRESERVATION OFFICER,

AND THE ADVISORY COUNCIL ON HISTORIC PRESERVATION

REGARDING VARIOUS BRIDGE PROJECTS WITHIN THE STATE OF MAINE

WHEREAS, the Maine Department of Transportation (MaineDOT), is proposing a variety of bridge projects which will be processed under a single United States Army Corps of Engineers (ACOE) Permit; and

WHEREAS, the projects are located throughout the state and, cumulatively, cover a large land area; and

WHERAS, the bridge projects are part of the 2010-2011 Maine DOT Work Plan and are listed in Attachment 1; and

WHEREAS, the ACOE and MaineDOT will establish an Area of Potential Effect for each specific project in accordance with 36 CFR Section 800.16(d); and

WHEREAS, the ACOE has determined that some of these projects may have an effect on National Register (NR)-listed or -eligible architectural and archaeological resources and has consulted with the Maine State Historic Preservation Officer, referred herein as the Maine Historic Preservation Commission (MHPC), pursuant to 36 CFR Part 800, regulations implementing Section 106 of the National Historic Preservation Act (16 U.S.C. Section 470(f); and

WHEREAS, the ACOE and the MHPC have identified the likely presence of architectural and archeological properties within the cumulative area of potential effects through background research, consultation and an appropriate level of field investigation; and

WHEREAS, the ACOE is consulting with the Aroostook Band of Micmacs, the Houlton Band of Maliseet Indians, the Passamaquoddy Tribe, and the Penobscot Nation in accordance with 36 CFR Section 800.3 (f)(2) and will apprise them of any findings; and

WHEREAS, the scope and limits of these projects still remain under investigation; and

WHEREAS, 36 CFR Section 800.4(b)(2) allows for phased identification and evaluation of historic properties where alternatives under consideration consist of corridors or large land areas, and allows the agency official to defer final identification and evaluation of historic properties if it is specifically provided for in a memorandum of agreement executed pursuant to

Section 800.6, a programmatic agreement executed pursuant to Section 800.14 (b), or the documents used by an agency official to comply with the National Environmental Policy Act pursuant to Section 800.8; and

WHEREAS, the ACOE has consulted with MaineDOT regarding the effects of the undertaking on potential National Register-eligible resources and has invited them to sign this MOA as a concurring party; and

WHEREAS, in accordance with 36 CFR Section 800.6(a)(1), the ACOE has notified the Advisory Council on Historic Preservation (Council) of the potential for an adverse effect determination. ACOE has invited the Council to consult and the Council has chosen not to participate in the consultation pursuant to 36 CFR Section 800.6(a)(1)(iii);

NOW, THEREFORE, the ACOE and the MHPC agree that the undertaking shall be implemented in accordance with the following stipulations in order to take into account the effect of the undertaking on potential historic properties.

STIPULATIONS

The ACOE shall ensure that the following measures are carried out:

I. For each project, the MaineDOT shall conduct identification and evaluation of architectural and archeological properties in accordance with 36 CFR Section 800.4(b)(1) and (c), as the limits and scopes of that project are refined, and in accordance with the provisions of the current Statewide Programmatic Agreement for Federal Aid Highway and Federal Transit Programs in Maine.

II. Identification (Phase I) archeological field investigations shall begin during the spring of 2009, followed as needed by eligibility determination (Phase II) investigations. Archaeological investigations shall be directed by archaeologist(s) meeting the Maine State Historic Preservation Officer's Standards for Archaeological Work in Maine (Chapter 812[94-089]), and meeting the Secretary of the Interior's Standards (36 CFR 61).

III. In order to ensure that historic properties are fully considered during the project development phase, Section 106 consultation must be concluded, prior to the approval of any applicable National Environmental Policy Act and Section 4(f) documentation. Resolution of any adverse effects shall be conducted in accordance with 36 CFR Section 800.6 which seeks ways to avoid, minimize or mitigate adverse effects. Any disputed determinations shall be processed in accordance with Stipulation VII.

IV. DURATION. This agreement will be null and void if its terms are not carried out within five (5) years from the date of its execution. Prior to such time, The ACOE may consult with the other signatories to reconsider the terms of the agreement and amend in accordance with

Stipulation VIII below.

V. POST-REVIEW DISCOVERIES. If potential historic properties are discovered or unanticipated effects on historic properties found, the signatory parties shall consult in accordance with 36 CFR Section 800.6(c)(6).

VI. MONITORING AND REPORTING. Each year following the execution of this agreement until it expires or is terminated, MaineDOT shall provide all parties to this agreement a summary report detailing work undertaken pursuant to its terms. Such report shall include any scheduling changes proposed, any problems encountered, and any disputes and objections received in MaineDOT's efforts to carry out the terms of this agreement. Failure to provide such summary report may be considered noncompliance with the terms of this MOA pursuant to Stipulation VIII, below.

VII. DISPUTE RESOLUTION. Should any signatory to this Agreement object within 30days to any actions proposed or carried out pursuant to this agreement, the ACOE shall consult with all parties to resolve the objection. If the ACOE determines that the objection cannot be resolved, the ACOE will request that the Council join consultation pursuant to 36 CFR Part 800.6(b). Any Council comment provided in response to such a request will be taken into account by the ACOE in accordance with 36 CFR Part 800.6(c)(2) with reference only to the subject of the dispute. The ACOE's responsibility to carry out all actions under this agreement that are not the subjects of the dispute will remain unchanged.

VIII. AMENDMENTS AND NONCOMPLIANCE. If any signatory to this MOA, including any invited signatory, determines that its terms will not or cannot be carried out or that an amendment to its terms must be made, that party shall immediately consult with the other parties to develop an amendment to this MOA pursuant to 36 CFR Sections 800.6(c)(7) and 800.6(c)(8). The amendment will be effective on the date a copy signed by all of the original signatories is filed with the Council. If the signatories cannot agree to appropriate terms to amend the MOA, any signatory may terminate the agreement in accordance with Stipulation IX, below.

IX. TERMINATION. If an MOA is not amended following the consultation set out in Stipulation IX, it may be terminated by any signatory or invited signatory. Within 30 days following termination, the ACOE shall notify the signatories if it will initiate consultation to execute an MOA with the signatories under 36 CFR Section 800.6(c)(1) or request the comments of the Council under 36 CFR Section 800.7(a) and proceed accordingly.

Execution of this Memorandum of Agreement by ACOE and MHPC, and implementation of its terms, are evidence that ACOE has afforded MHPC an opportunity to comment on this project and its effects on historic properties, and ACOE has taken into account the effects of the undertaking on historic properties.

NEW ENGLAND DISTRICT, U.S. ARMY CORPS OF ENGINEERS

By: _____ 2/26/09 Date:
Heather L. Sullivan, Acting Chief, Regulatory Division

for

MAINE STATE HISTORIC PRESERVATION OFFICER

By: _____ Date: 2/2/09
Earle G. Shettleworth, Jr., State Historic Preservation Officer

CONCURRENCE by Maine Dept. of Transportation

By: _____ 2-5-09 Date:
David A. Cole, Commissioner

STATE OF MAINE
DEPARTMENT OF ENVIRONMENTAL PROTECTION
17 STATE HOUSE STATION
AUGUSTA, ME 04333

DEPARTMENT ORDER

IN THE MATTER OF

MAINE DEPARTMENT OF TRANSPORTATION	) NATURAL RESOURCES PROTECTION
Falmouth & S. Portland, Cumberland County	) COASTAL WETLAND ALTERATION
Princeton, Washington County	) FRESHWATER WETLAND ALTERATION
2010-2011 BRIDGE PERMIT	) WATER QUALITY CERTIFICATION
L-24524-L6-A-N (approval)	)
L-24524-2B-B-N	) FINDINGS OF FACT AND ORDER

Pursuant to the provisions of 38 M.R.S.A. § 480-A et seq. and Section 401 of the Federal Water Pollution Control Act, the Department of Environmental Protection has considered the application of MAINE DEPARTMENT OF TRANSPORTATION with the supportive data, agency review comments, and other related materials on file and FINDS THE FOLLOWING FACTS:

1. PROJECT DESCRIPTION:

A. History: The project is being proposed in response to Public Law, Chapter 647 "An Act To Keep Bridges Safe" and "Keeping our Bridges Safe", a report on Maine's bridge inspection and improvements program dated November 26, 2007. The report listed critical bridges requiring immediate attention to ensure public safety and protect the economic vitality of Maine's transportation network. The Maine Department of Transportation (applicant) screened approximately 300 bridges that had been identified on the list of critical bridges and determined that a significant number of the proposed bridge repair projects do not require a permit from the Department based on the scope or nature of the work required to complete the repair. The remaining bridges were divided into two permitting phases: phase I (2010-2011), included herein, and phase II (2012-2013), which will be submitted to the Department for permitting in 2011. In February 2009, the applicant and the Department established a Memorandum of Agreement (MOA), which established an umbrella style of permitting multiple projects within a single application.

B. Summary: The applicant proposes to repair and/or replace 51 bridges at various locations across the State as phase I of the "Keeping our Bridges Safe" initiative. The applicant has designed 49 of the bridge repair and/or replacement projects to meet the standards pursuant to Chapter 305, Permit-by-Rule Standards (PBR), Sections # 4 Replacement of Structures and #11 State Transportation Facilities (PBR #47992). The applicant agrees to all the terms and conditions of Chapter 305 for the 49 qualifying bridges including work window timing restrictions required by the Maine Department of Inland Fisheries & Wildlife (MDIF&W), except as provided by the Special Permit Conditions associated with this permit. The bridges are listed in Attachments #1 and #3 of the application, which includes the bridge identification numbers, locations, scope of the work, proposed impacts, and review agency comments.

In addition to the 49 bridge projects that qualify for permitting pursuant to Chapter 305, the applicant proposes to undertake repairs at two (2) bridge locations that require approval through an individual Natural Resources Protection Act (NRPA) permit. The two (2) bridges are the Route 26/100 Presumpscot River bridge in Falmouth and the Route 1 Calais Road bridge located over Lewy Lake in Princeton. The specific detail of these three proposed bridge projects are as follows:

1) Falmouth, Route 26/100, Presumpscot River Bridge. The bridge project is identified as bridge #2702 in attachments #1 and #3 of the application. The applicant proposes to replace and expand the existing bridge structure, impacting approximately 18,000 square feet of palustrine scrub shrub wetland and 4,000 square feet of river bottom for the placement of piers for the new bridge.

2) Princeton, Calais Road (Rt # 1) bridge. The bridge project is identified as bridge #2688 in attachments #1 and #3 of the application. The applicant proposes to replace the existing structure with a wider structure and impact approximately 10,000 square feet of palustrine unconsolidated bottom and emergent wetland impacts to accommodate snowmobile and pedestrian use at the request of the Passamaquoddy Nation.

The applicant has proposed project specifications for all in-water work associated with the bridge repair and replacements as discussed further in Findings #3-5. The entire project specifications will be annually reviewed beginning in January 2010, which will provide the Department an opportunity to request the applicant address any project specific concerns. The applicant intends to advertise and construct the bridges at various times over the next 2 years starting in May 2009. To facilitate construction monitoring, the applicant included in the application a spreadsheet, which will facilitate project tracking review, and construction under this application. Starting in May, the applicant will update the spreadsheet on a monthly basis to provide current information regarding project status and construction timing to the Department.

C. Current Use of the Site: The proposed project sites contain bridges over numerous rivers, streams, brooks, great ponds, and tidal wetlands throughout the State of Maine.

2. EXISTING SCENIC, AESTHETIC, RECREATIONAL OR NAVIGATIONAL USES:

In accordance with Chapter 315, Assessing and Mitigating Impacts to Scenic and Aesthetic Uses, the applicant submitted a copy of the Department's Visual Evaluation Field Survey Checklist as Appendix A to the application along with a description of the property and the proposed project. The applicant also submitted several photographs of each proposed project site.

The proposed projects requiring individual permit review are located over the Presumpscot River and Lewy Lake, which are scenic resources visited by the general public, in part, for the use, observation, enjoyment and appreciation of its natural and cultural visual qualities. The proposed projects are expansions or replacements of existing bridges. The applicant has submitted photographs of all the sites where work is proposed. The proposed replacements or expansions do not significantly change the dimensions of the bridges as viewed from the scenic resource.

The proposed projects were evaluated using the Department’s Visual Impact Assessment Matrix and were found to have an acceptable potential visual impact rating. Based on the information submitted in the application and the visual impact rating, the Department determined that the location and scale

of the proposed activity is compatible with the existing visual quality and landscape characteristics found within the viewshed of the scenic resource in the project area.

The Department did not identify any issues involving existing recreational and navigational uses.

The Department finds that the proposed activities will not unreasonably interfere with existing scenic, aesthetic, recreational or navigational uses of the protected natural resources.

3. SOIL EROSION:

The applicant proposes to adhere to the most recent version of MaineDOT's Highway Standard Specifications including Special Provision 656-Temporary Soil Erosion and Water Pollution Control Plan (SEWPCP) for each bridge project. Language requiring that all contractors follow these specifications will be incorporated into the contract terms and conditions for all construction project contracts. In addition, the applicant will ensure that the following erosion control provisions are followed for each bridge repair project:

A. The MaineDOT Best Management Practices (BMPs) for Erosion and Sedimentation Control Manual (February 2008) will be applied and maintained on all projects. As standard practice for all projects, Surface Water Quality personnel and Regional Environmental Coordinators will review the draft SEWPCP, make final recommendations, and the project resident will approve temporary and permanent erosion and sedimentation provisions for inclusion in each contract awarded by the applicant. In addition, Maine DOT Environmental Office staff will provide oversight of the appropriate application of BMPs, technical assistance to resident engineers, and on-site response on a project specific basis.

B. The applicant will utilize the following in-water work standards to mitigate against unreasonable erosion of soil material and operate outside of standard in-water work windows provided that:

1). The applicant will use turbidity limiting measures to limit the effects of siltation for all pile removals and replacements in fine substrates such as clay, silt and mud. Turbidity limiting measure will include but are not limited to working on an out-going tide, or the use of silt booms, floating curtains, etc.

2). Stream flow diversion and re-establishment will be performed in conformance with the latest version of the MaineDOT BMP manual.

3). Sandbags or jersey barriers used for coffer dams or temporary stream diversions will be removed either by hand or by use of shore-based machinery and reach-in techniques.

4). The applicant will utilize temporary work staging platforms to facilitate bridge repair and re-construction activities. Staging platforms will consist of temporary pile supported work platforms, work via barge, work via adjacent upland, or work from the existing structure. Placement and/or removal of staging equipment will occur in accordance with the MaineDOT BMP manual.

5). In all waterways, the applicant will divert stream flow as necessary to create a stable dry work environment using techniques described in the MaineDOT BMP manual.

Based on a review of the Best Management Practices documents submitted by the applicant as part of the application and the standard project provisions outlined above, the Department has determined that the applicant has made adequate provision to ensure that the project will not result in an unreasonable discharge of sediment into the resource.

Therefore, the Department finds that the activities will not cause the unreasonable erosion of soil or sediment discharge into the resource nor unreasonably inhibit the natural transfer of soil from the terrestrial to the marine or freshwater environment provided that the applicant: applies the provisions of the MaineDOT BMPs for Erosion and Sedimentation Control BMP Manual (February 2008) on all projects; ensures that Surface Water Quality personnel and Regional Environmental Coordinators review, and approve temporary and permanent erosion and sedimentation provisions for inclusion in each contract awarded; ensures that Environmental Office staff provide oversight of the appropriate application of BMPs, technical assistance to resident engineers and on-site response on a project specific basis; and follows the in-water work standards outlined above for all bridge repair and replacement projects.

4. HABITAT CONSIDERATIONS:

The applicant proposes to utilize its "Waterway and Wildlife Crossing Policy and Design Guide" (July 2008) on all projects. The Waterway and Wildlife Crossing Policy and Design Guide requires the applicant to develop effective methods of building, repairing, and maintaining transportation infrastructure, while protecting important aquatic, wildlife, and surface water resources. The applicant is not proposing to block fish passage during the re-construction of any of the Route 26/100, Presumpscot River Bridge or the Calais Road Bridge.

A. Falmouth, Route 26/100, Presumpscot River Bridge (Bridge #2702): The Department reviewed a Geographic Information System database and did not identify any significant wildlife habitat associated with this project site. The proposed project was reviewed by the Department of Inland Fisheries & Wildlife (MDIFW), which stated that it did not identify any issues with regard to rare, threatened or endangered species at the proposed project site. The Department of Marine Resources (DMR) review the proposed project and requests that the applicant limit construction activity for the Route 26/100 Presumpscot River bridge project to the period between August 1st and April 31st due to the presence of alewives and herring. The applicant has agreed to this in-water work window restriction.

B. Princeton, Calais Road (Rt #1) bridge (Bridge #2688): The Department reviewed a Geographic Information System database, which did not identify any rare, threatened or endangered species with the proposed project site. MDIFW reviewed the proposed project site and did not identify any issues of concern, rare, threatened or endangered species at the site. DMR has reviewed the proposed project site and did not identify any species of concern or any construction window restrictions.

The applicant further proposes to include language within each bridge repair/replacement contract that restricts in-water work to a specific time of year if determined necessary in consultation with MDIFW and DMR. Agency staff from MDIFW and DMR and/or the Department may modify any in-water work window if necessary to address specific fisheries concerns identified during the construction process. In addition, the Coordination and Permits Division Manager or the Environmental Office Director at MaineDOT may extend a project's in-water work window by up to 10 days without requesting a permit modification from the Department provided that a notice of justification and need is submitted to the Department prior to granting the extension.

The Department finds that the activities will not unreasonably harm any significant wildlife habitat, freshwater wetland plant habitat, threatened or endangered plant habitat, aquatic or adjacent upland habitat, travel corridor, freshwater, estuarine or marine fisheries or other aquatic life provided that the applicant will limit construction of the Route 26/100 Presumpscot River Bridge in Falmouth to a August 1st to April 30th in-water work window, the applicant will apply its "Waterway and Wildlife Crossing Policy and Design Guide" (July 2008) to all projects, and the applicant may extend a project's in-water work window by up to 10 days without requesting a permit modification from the Department provided that they submit a notice of justification and need to the Department prior to granting the extension.

5. WATER QUALITY CONSIDERATIONS:

The applicant's Best Management Practices for Erosion and Sedimentation Control Manual requires each contractor to install and maintain appropriate erosion controls and to utilize good housekeeping practices for equipment utilized on construction projects. Each contractor is required to utilize proper fuel filling procedures for equipment and maintain equipment to prevent leaks. Each site is required to have a spill kit to clean up spills if they occur and a project specific plan for responding to spills including contacting the Department to report and remediate a spill.

The Department finds that the proposed project will violate any state water quality law, including those governing the classification of the State's waters.

6. WETLANDS AND WATERBODIES PROTECTION RULES:

The applicant proposes to impact approximately 18,000 square feet of palustrine scrub shrub and 4,000 square feet of riverine bottom to replace the Route 26/100 Presumpscot River bridge in Falmouth and impact approximately 10,000 square feet of palustrine unconsolidated bottom and palustrine emergent wetlands associated with Lewy Lake to replace the Route 1 Lewy Lake bridge in Princeton..

The Department's Wetlands and Waterbodies Protection Rules, Chapter 310, require that the applicant meet the following standards:

A. Avoidance. No activity may be permitted if there is a practicable alternative to the project that would be less damaging to the environment. Each application for a Natural Resources Protection Act permit must provide an analysis of alternatives in order to demonstrate that a practicable alternative does not exist. The applicant submitted an alternatives analysis for the proposed project dated February 18, 2009. The applicant considered alternatives to bridge replacement where ever possible; however given the structural condition of some of the bridges the applicant is unable to avoid impacts while meeting the project purpose of ensuring an adequate transportation system and protecting public safety.

B. Minimal Alteration. The amount of waterbody to be altered must be kept to the minimum amount necessary for meeting the overall purpose of the project. The applicant has minimized wetland impacts by installing new abutments in back of existing structures and removing the existing abutments to increase the bank full width of the waterway whenever practicable. The 48 bridges qualifying for PBR include replacing 10 of the bridges with wider structures, 6 of the projects consist of large pipes that will have weirs installed to enhance fish passage, and 1 project

will have a natural bottom pipe-arch installed. The Department notes that replacing the existing structures with longer spans or wider structures will increase aquatic habitat and flood flow capacity. Some of these projects will restore fish passage in water bodies where previously none occurred due to the structure limitations such as hanging culverts. Weirs will be installed in structures where a need is identified to improve aquatic organism passage. Finally, the applicant intends to remove 2 redundant bridges: the Muddy Brook Bridge on the Townway Road in New Sharon and the Smith Pond Bridge on the Hilton Hill Road in Skowhegan, both of which contain critical habitat for Atlantic salmon.

C. Compensation. In accordance with Chapter 310 Section 5 (C), compensation is required to achieve the goal of no net loss of waterbody functions and values. The applicant is not proposing compensation as many of the projects meet PBR standards and have minimal impact. The remaining two projects involve approximately 28,000 square feet of impacts and would otherwise require compensation in accordance with Chapter 310. However, the scope of the projects include the removal of 2 redundant or archaic bridges, increasing channel width in the majority of replacement projects, and improving hydrologic capacity wherever possible, which will offset the proposed impacts. In addition, the 10 projects involving longer spans or wider structures will result in more riverine habitat at the locations. Therefore, the Department is not requiring compensation as the nature of the projects is self-mitigating.

The Department finds that the applicant has avoided and minimized waterbody impacts to the greatest extent practicable, and that the proposed projects represent the least environmentally damaging alternative that meets the overall purpose of the project, and that the function and value benefits of the projects overall outweigh any potential adverse impacts resulting from limited encroachment of replaced or rehabilitated structures into the protected natural resources.

7. OTHER CONSIDERATIONS:

The Department did not identify any other issues involving existing scenic, aesthetic, or navigational uses, soil erosion, habitat or fisheries, the natural transfer of soil, natural flow of water, water quality, or flooding.

BASED on the above findings of fact, and subject to the conditions listed below, the Department makes the following conclusions pursuant to 38 M.R.S.A. Sections 480-A et seq. and Section 401 of the Federal Water Pollution Control Act:

A. The proposed activity will not unreasonably interfere with existing scenic, aesthetic, recreational, or navigational uses.

B. The proposed activity will not cause unreasonable erosion of soil or sediment provided that the applicant's BMP manual for Erosion and Sedimentation Control Manual (February 2008) will be applied and maintained on all projects as indicated in Finding #3A.

C. The proposed activity will not unreasonably inhibit the natural transfer of soil from the terrestrial to the marine or freshwater environment.

D. The proposed activity will not unreasonably harm any significant wildlife habitat, freshwater wetland plant habitat, threatened or endangered plant habitat, aquatic or adjacent upland habitat, travel corridor, freshwater, estuarine, or marine fisheries or other aquatic life provided that the applicant will

utilize an August 1st to April 30th in-water work window for the Route 26/100 Presumpscot River Bridge in Falmouth except as specified in the Special In-Water Work Provisions included in the application, the applicant will apply its "Waterway and Wildlife Crossing Policy and Design Guide" (July 2008) to all projects, and the applicant may extend a project's in-water work window by up to 10 days without requesting a permit modification from the Department provided that they submit a notice of justification and need to the Department prior to granting the extension.

E. The proposed activity will not unreasonably interfere with the natural flow of any surface or subsurface waters.

F. The proposed activity will not violate any state water quality law including those governing the classifications of the State's waters.

G. The proposed activity will not unreasonably cause or increase the flooding of the alteration area or adjacent properties.

H. The proposed activity is not on or adjacent to a sand dune.

I. The proposed activity is not on an outstanding river segment as noted in Title 38 M.R.S.A. Section 480-P.

THEREFORE, the Department APPROVES the above noted application of MAINE DEPARTMENT OF TRANSPORTATION for the 2010-2011replacement, rehabilitation, or removal of bridges as proposed, SUBJECT TO THE ATTACHED CONDITIONS, and all applicable standards and regulations:

1. Standard Conditions of Approval, a copy attached.

2. The applicant shall take all necessary measures to ensure that its activities or those of its agents do not result in measurable erosion of soil on the site during the construction of the project covered by this approval.

3. The applicant's BMP manual for Erosion and Sedimentation Control Manual (February 2008) shall be applied and maintained on all projects.

4. The applicant shall utilize an August 1st to April 30th in-water work window for the Route 26/100 Presumpscot River Bridge in Falmouth except as specified in the Special In-Water Work Provisions included in the application.

5. The applicant shall apply its "Waterway and Wildlife Crossing Policy and Design Guide" (July 2008) to all projects.

6. The applicant may extend a project specific time of year restriction by as much as 10 days without having to formally modify the permit provided that it submits a notice of justification and need to the Department prior to granting the extension.

7. Severability. The invalidity or unenforceability of any provision, or part thereof, of this License shall not affect the remainder of the provision or any other provisions. This License shall be construed and enforced in all respects as if such invalid or unenforceable provision or part thereof had been omitted.

THIS APPROVAL DOES NOT CONSTITUTE OR SUBSTITUTE FOR ANY OTHER REQUIRED STATE, FEDERAL OR LOCAL APPROVALS NOR DOES IT VERIFY COMPLIANCE WITH ANY APPLICABLE SHORELAND ZONING ORDINANCES.

DEPARTMENT OF ENVIRONMENTAL PROTECTION

PLEASE NOTE THE ATTACHED SHEET FOR GUIDANCE ON APPEAL PROCEDURES

do/ats#69527/l24524an

Natural Resource Protection Act (NRPA)
Standard Conditions

THE FOLLOWING STANDARD CONDITIONS SHALL APPLY TO ALL PERMITS GRANTED UNDER THE NATURAL RESOURCE PROTECTION ACT, TITLE 38, M.R.S.A. SECTION 480-A ET.SEQ. UNLESS OTHERWISE SPECIFICALLY STATED IN THE PERMIT.

A. Approval of Variations From Plans. The granting of this permit is dependent upon and limited to the proposals and plans contained in the application and supporting documents submitted and affirmed to by the applicant. Any variation from these plans, proposals, and supporting documents is subject to review and approval prior to implementation.

B. Compliance With All Applicable Laws. The applicant shall secure and comply with all applicable federal, state, and local licenses, permits, authorizations, conditions, agreements, and orders prior to or during construction and operation, as appropriate.

C. Erosion Control. The applicant shall take all necessary measures to ensure that his activities or those of his agents do not result in measurable erosion of soils on the site during the construction and operation of the project covered by this Approval.

D. Compliance With Conditions. Should the project be found, at any time, not to be in compliance with any of the Conditions of this Approval, or should the applicant construct or operate this development in any way other the specified in the Application or Supporting Documents, as modified by the Conditions of this Approval, then the terms of this Approval shall be considered to have been violated.

E. Initiation of Activity Within Two Years. If construction or operation of the activity is not begun within two years, this permit shall lapse and the applicant shall reapply to the Board for a new permit. The applicant may not begin construction or operation of the activity until a new permit is granted. Reapplications for permits shall state the reasons why the applicant will be able to begin the activity within two years form the granting of a new permit, if so granted. Reapplications for permits may include information submitted in the initial application by reference.

F. Reexamination After Five Years. If the approved activity is not completed within five years from the date of the granting of a permit, the Board may reexamine its permit approval and impose additional terms or conditions to respond to significant changes in circumstances which may have occurred during the five-year period.

G. No Construction Equipment Below High Water. No construction equipment used in the undertaking of an approved activity is allowed below the mean high water line unless otherwise specified by this permit.

H. Permit Included In Contract Bids. A copy of this permit must be included in or attached to all contract bid specifications for the approved activity.

I. Permit Shown To Contractor. Work done by a contractor pursuant to this permit shall not begin before the contractor has been shown by the applicant a copy of this permit.

Revised (4/92/DEP LW0428

DEPARTMENT OF ENVIRONMENTAL PROTECTION
Erosion Control for Homeowners

Before Construction

1. If you have hired a contractor, make sure you discuss your permit-by-rule with them. Talk about what measures they plan to take to control erosion. Everybody involved should understand what the resource is, and where it is located. Most people can identify the edge of a lake or river. However, the edges of wetlands are often not so obvious. Your contractor may be the person actually pushing dirt around, but you are both responsible for complying with the permit-by-rule.

2. Call around to find where erosion control materials are available. Chances are your contractor has these materials already on hand. You probably will need silt fence, hay bales, wooden stakes, grass seed (or conservation mix), and perhaps filter fabric. Places to check for these items include farm & feed supply stores, garden & lawn suppliers, and landscaping companies. It is not always easy to find hay or straw during late winter and early spring. It also may be more expensive during those times of year. Plan ahead -- buy a supply early and keep it under a tarp.

3. Before any soil is disturbed, make sure an erosion control barrier has been installed. The barrier can be either a silt fence, a row of staked hay bales, or both. Use the drawings below as a guide for correct installation and placement. The barrier should be placed as close as possible to the soil-disturbance activity.

4. If a contractor is installing the erosion control barrier, double check it as a precaution. Erosion control barriers should be installed "on the contour", meaning at the same level or elevation across the land slope, whenever possible. This keeps stormwater from flowing to the lowest point along the barrier where it can build up and overflow or destroy the barrier.

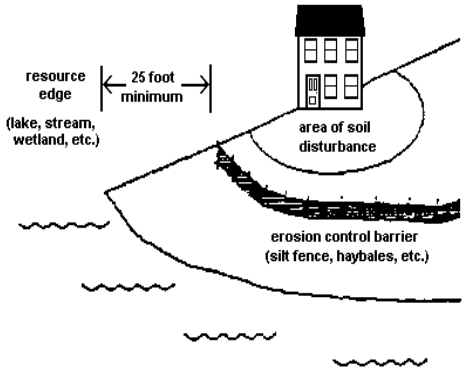

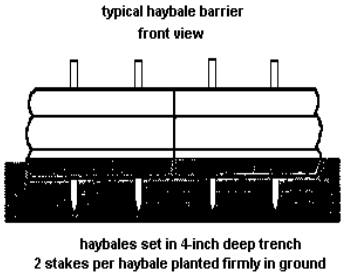

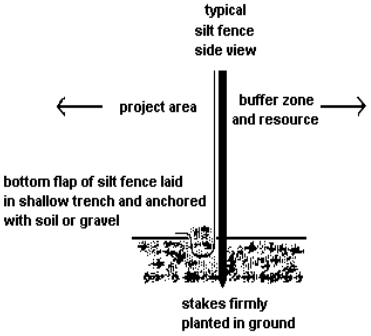

During Construction

1. Use lots of hay or straw mulch on disturbed soil. The idea behind mulch is to prevent rain from striking the soil directly. It is the force of raindrops hitting the bare ground that makes the soil begin to move downslope with the runoff water, and cause erosion. More than 90% of erosion is prevented by keeping the soil covered.

2. Inspect your erosion control barriers frequently. This is especially important after a rainfall. If there is muddy water leaving the project site, then your erosion controls are not working as intended. You or your contractor then need to figure out what can be done to prevent more soil from getting past the barrier.

3. Keep your erosion control barrier up and maintained until you get a good and healthy growth of grass and the area is permanently stabilized.

NOTIFICATION OF ADMINISTRATIVE APPEAL OPTIONS AND PROCESS AND REQUEST FOR APPEAL

Applicant: Maine Dept. of Transportation		File Number: NAE-2009-00514	Date:
Attached is:			See Section below
	INITIAL PROFFERED PERMIT (Standard Permit or Letter of permission)		A
X	PROFFERED PERMIT (Standard Permit or Letter of permission)		B
	PERMIT DENIAL		C
	APPROVED JURISDICTIONAL DETERMINATION		D
X	PRELIMINARY JURISDICTIONAL DETERMINATION		E

SECTION I - The following identifies your rights and options regarding an administrative appeal of the above decision. Additional information may be found at http://usace.army.mil/inet/functions/cw/cecwo/reg or Corps regulations at 33 CFR Part 331.

A: INITIAL PROFFERED PERMIT: You may accept or object to the permit.

- ACCEPT: If you received a Standard Permit, you may sign the permit document and return it to the District Engineer for final authorization in care of "Regulatory Division." If you received a Letter of Permission (LOP), you may accept the LOP and your work is authorized. Your signature on the Standard Permit or acceptance of the LOP means that you accept the permit in its entirety, and waive all rights to appeal the permit, including its terms and conditions, and approved jurisdictional determinations associated with the permit.

- OBJECT: If you object to the permit (Standard or LOP) because of certain terms and conditions therein, you may request that the permit be modified accordingly. You must complete Section II of this form and return the form to the District Engineer, in care of the Chief, Regulatory Division, as specified in the last paragraph of the coverletter. Your objections must be received within 60 days of the date of this notice, or you will forfeit your right to appeal the permit in the future. Upon receipt of your letter, the District Engineer will evaluate your objections and may: (a) modify the permit to address all of your concerns, (b) modify the permit to address some of your objections, or (c) not modify the permit having determined that the permit should be issued as previously written. After evaluating your objections, the District Engineer will send you a proffered permit for your reconsideration, as indicated in Section B below.

B: PROFFERED PERMIT: You may accept or appeal the permit

- ACCEPT: If you received a Standard Permit, you may sign the permit document and return it to the District Engineer for final authorization in care of "Regulatory Division." If you received a Letter of Permission (LOP), you may accept the LOP and your work is authorized. Your signature on the Standard Permit or acceptance of the LOP means that you accept the permit in its entirety, and waive all rights to appeal the permit, including its terms and conditions, and approved jurisdictional determinations associated with the permit.
- APPEAL: If you choose to decline the proffered permit (Standard or LOP) because of certain terms and conditions therein, you may appeal the declined permit under the Corps of Engineers Administrative Appeal Process by completing Section II of this form and sending the form to the Division Engineer in care of: Michael G. Vissichelli, Administrative Appeals Review Officer, North Atlantic Division, Corps of Engineers, North Atlantic Fort Hamilton Military Community, Bldg. 301, General Lee Avenue, Brooklyn, NY 11252-6700 Telephone: (718) 765-7163, E-mail: Michael.G.Vissichelli@usace.army.mil The Division Engineer must receive this form within 60 days of the date of this notice.
-

- C: PERMIT DENIAL: You may appeal the denial of a permit under the Corps of Engineers Administrative Appeal Process by completing Section II of this form and sending the form to the Division Engineer in care of: Michael G. Vissichelli, Administrative Appeals Review Officer, North Atlantic Division, Corps of Engineers, North Atlantic Fort Hamilton Military Community, Bldg. 301, General Lee Avenue, Brooklyn, NY 11252-6700 Telephone: (718) 765-7163, E-mail: Michael.G.Vissichelli@usace.army.mil The Division Engineer must receive this form within 60 days of the date of this notice.

D: APPROVED JURISDICTIONAL DETERMINATION: You may accept or appeal the approved JD or provide new information.

- ACCEPT: You do not need to notify the Corps to accept an approved JD. Failure to notify the Corps within 60 days of the date of this notice means that you accept the approved JD in its entirety, and waive all rights to appeal the approved JD.
- APPEAL: If you disagree with the approved JD, you may appeal the approved JD under the Corps of Engineers Administrative Appeal Process by completing Section II of this form and sending the form to the Division Engineer in care of: Michael G. Vissichelli, Administrative Appeals Review Officer, North Atlantic Division, Corps of Engineers, North Atlantic Fort Hamilton Military Community, Bldg. 301, General Lee Avenue, Brooklyn, NY 11252-6700 Telephone: (718) 765-7163, E-mail: Michael.G.Vissichelli@usace.army.mil The Division Engineer must receive this form within 60 days of the date of this notice.

E: PRELIMINARY JURISDICTIONAL DETERMINATION: You do not need to respond to the Corps regarding the preliminary JD. The Preliminary JD is not appealable. If you wish, you may request an approved JD (which may be appealed), by contacting the Corps district at the address below for further instruction. Also you may provide new information for further consideration by the Corps to reevaluate the JD.

SECTION II - REQUEST FOR APPEAL or OBJECTIONS TO AN INITIAL PROFFERED PERMIT

REASONS FOR APPEAL OR OBJECTIONS: (Describe your reasons for appealing the decision or your objections to an initial proffered permit in clear concise statements. You may attach additional information to this form to clarify where your reasons or objections are addressed in the administrative record.)

ADDITIONAL INFORMATION: The appeal is limited to a review of the administrative record, the Corps memorandum for the record of the appeal conference or meeting, and any supplemental information that the review officer has determined is needed to clarify the administrative record. Neither the appellant nor the Corps may add new information or analyses to the record. However, you may provide additional information to clarify the location of information that is already in the administrative record.

POINT OF CONTACT FOR QUESTIONS OR INFORMATION:

If you have questions regarding this decision and/or the appeal process you may contact Ms. Ruth Ladd at:

Chief, Policy Analysis/Technical Support Branch
Corps of Engineers
696 Virginia Road
Concord, MA 01742 or by calling (978) 318-8818

RIGHT OF ENTRY: Your signature below grants the right of entry to Corps of Engineers personnel, and any government consultants, to conduct investigations of the project site during the course of the appeal process. You will be provided a 15-day notice of any site investigation, and will have the opportunity to participate in all site investigations.

_____ Signature of appellant or agent.	Date:	Telephone number:

Applicant Options with Initial/Proffered Permit

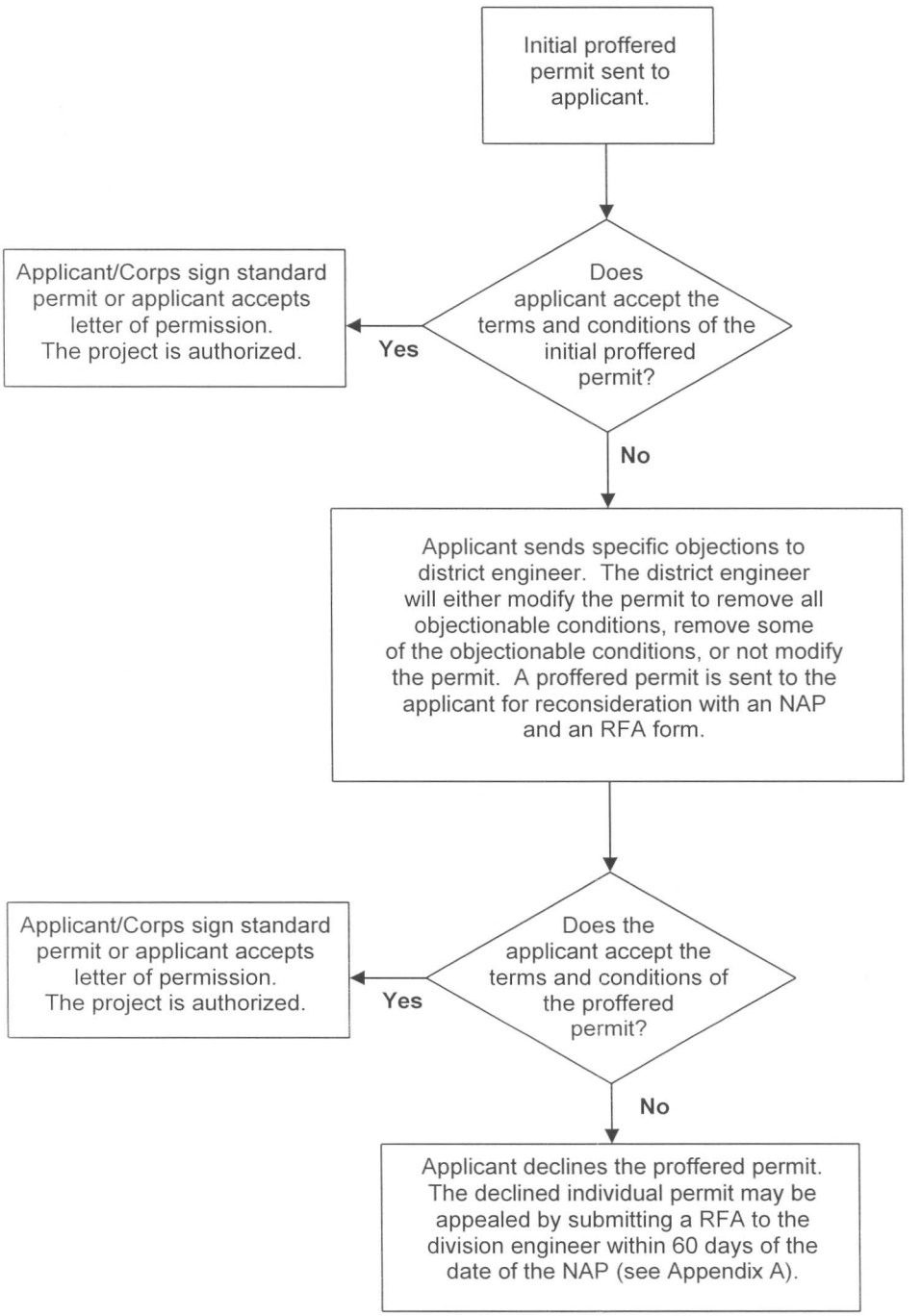

Appendix B

ATTACHMENT to MaineDOT Batch Permit

PRELIMINARY JURISDICTIONAL DETERMINATION FORM

BACKGROUND INFORMATION

A. REPORT COMPLETION DATE FOR PRELIMINARY JURISDICTIONAL DETERMINATION (JD): 2/25/09

B. NAME AND ADDRESS OF PERSON REQUESTING PRELIMINARY JD: Richard Bostwick, MaineDOT Environmental Office, 16 SHS, Augusta, ME 04333

C. DISTRICT OFFICE, FILE NAME, AND NUMBER: New England District; ME DOT 2-Year Bridge Permit Application; NAE-2009-00514

D. PROJECT LOCATION(S) AND BACKGROUND INFORMATION: Place fill below the ordinary high water line and the high tide line of numerous waterways and in their adjacent freshwater and tidal wetlands throughout the State of Maine in order to replace, rehabilitate, or repair numerous bridges and culverts. This work is being conducted in response to Federal and State stimulus efforts and is designed to address critical bridges that need immediate attention to insure public safety and protect the economic vitality of Maine's transportation network.

SEE ATTACHED TABLE OF WATERS AND WETLANDS AND THEIR IMPACTS

State: **Maine** County/parish/borough: **Various** City: **Various**
Center coordinates of site (lat/long in degree decimal format): Lat. ° **Pick List**
, Long. ° **Pick List**.
Universal Transverse Mercator: **Zone 19N - see Table**
Name of nearest waterbody: **Various- see Table**

Identify (estimate) amount of waters in the review area: **See attached Table**
Non-wetland waters: linear feet: width (ft) and/or acres.
Cowardin Class:
Stream Flow:
Wetlands: acres.
Cowardin Class:

Name of any water bodies on the site that have been identified as Section 10 waters: **See attached Table**
Tidal: **Noted on attached table**
Non-Tidal: **Penobscot & Kennebec Rivers**

E. REVIEW PERFORMED FOR SITE EVALUATION (CHECK ALL THAT APPLY):

☒ Office (Desk) Determination. Date: **Various- last on 2/25/09**
☒ Field Determination. Date(s): **Various and limited**

1. The Corps of Engineers believes that there may be jurisdictional waters of the United States on the subject site, and the permit applicant or other affected party who requested this preliminary JD is hereby advised of his or her option to request and obtain an approved jurisdictional determination (JD) for that site. Nevertheless, the permit applicant or other person who requested this preliminary JD has declined to exercise the option to obtain an approved JD in this instance and at this time.

2. In any circumstance where a permit applicant obtains an individual permit, or a Nationwide General Permit (NWP) or other general permit verification requiring "pre-construction notification" (PCN), or requests verification for a non-reporting NWP or other general permit, and the permit applicant has not requested an approved JD for the activity, the permit applicant is hereby made aware of the following: (1) the permit applicant has elected to seek a permit authorization based on a preliminary JD, which does not make an official determination of jurisdictional waters; (2) that the applicant has the option to request an approved JD before accepting the terms and conditions of the permit authorization, and that basing a permit authorization on an approved JD could possibly result in less compensatory mitigation being required or different special conditions; (3) that the applicant has the right to request an individual permit rather than accepting the terms and conditions of the NWP or other general permit authorization; (4) that the applicant can accept a permit authorization and thereby agree to comply with all the terms and conditions of that permit, including whatever mitigation requirements the Corps has determined to be necessary; (5) that undertaking any activity in reliance upon the subject permit authorization without requesting an approved JD constitutes the applicant's acceptance of the use of the preliminary JD, but that either form of JD will be processed as soon as is practicable; (6) accepting a permit authorization (e.g., signing a proffered individual permit) or undertaking any activity in reliance on any form of Corps permit authorization based on a preliminary JD constitutes agreement that all wetlands and other water bodies on the site affected in any way by that activity are jurisdictional waters of the United States, and precludes any challenge to such jurisdiction in any administrative or judicial compliance or enforcement action, or in any administrative appeal or in any Federal court; and (7) whether the applicant elects to use either an approved JD or a preliminary JD, that JD will be processed as soon as is practicable. Further, an approved JD, a proffered individual permit (and all terms and conditions contained therein), or individual permit denial can be administratively appealed pursuant to 33 C.F.R. Part 331, and that in any administrative appeal, jurisdictional issues can be raised (see 33 C.F.R. 331.5(a)(2)). If, during that administrative appeal, it becomes necessary

to make an official determination whether CWA jurisdiction exists over a site, or to provide an official delineation of jurisdictional waters on the site, the Corps will provide an approved JD to accomplish that result, as soon as is practicable. This preliminary JD finds that there *"may be"* waters of the United States on the subject project site, and identifies all aquatic features on the site that could be affected by the proposed activity, based on the following information:

SUPPORTING DATA. Data reviewed for preliminary JD (check all that apply - checked items should be included in case file and, where checked and requested, appropriately reference sources below):

☒ Maps, plans, plots or plat submitted by or on behalf of the applicant/consultant: **Contained in administrative record.**

☐ Data sheets prepared/submitted by or on behalf of the applicant/consultant.

☐ Office concurs with data sheets/delineation report.

☐ Office does not concur with data sheets/delineation report.

☐ Data sheets prepared by the Corps: .

☐ Corps navigable waters' study: .

☐ U.S. Geological Survey Hydrologic Atlas: .

☐ USGS NHD data.

☒ USGS 8 and 12 digit HUC maps.

☒ U.S. Geological Survey map(s). Cite scale & quad name: **Multiple**.

☒ USDA Natural Resources Conservation Service Soil Survey. Citation **all Maine counties Mapped**

☒ National wetlands inventory map(s). Cite name: **Statewide layer in Maine Office of GIS (MEGIS) Database used:**

☐ State/Local wetland inventory map(s): .

☒ FEMA/FIRM maps: **Various as Mapped in the MEGIS database:**

☐ 100-year Floodplain Elevation is: (National Geodectic Vertical Datum of 1929)

☒ Photographs: ☒ Aerial (Name & Date): **MEGIS Ortho Rectified mapping of various dates since 2002**.

or ☒ Other (Name & Date): **Ground photos taken by John Perry and Dan Tierney (DOT Staff) taken fall 2008 and MaineDOT Bridge maintenance files from 1970s to present**..

☐ Previous determination(s). File no. and date of response letter: .

☒ Other information (please specify): **All of these projects are bridges or culverts with wetland area immediately adjacent to USGS mapped streams, that flow into other mapped waterways and eventually into the Gulf of Maine**

IMPORTANT NOTE: The information recorded on this form has not necessarily been verified by the Corps and should not be relied upon for later jurisdictional determinations.

Jay L. Clement 2/26/09

Jay L. Clement Date
Senior Project Manager
Maine Project Office

Judy C. Gates 2/26/09

Judy Gates Date
Director, Environmental Office
Maine Dept. of Transportation

Matrix for Juridictional Determination- County, Town , Road, Waterway, and UTM coordinates; and Resource by Cowardin type, and Impact Amounts							Waterway and permit type	
BR#	UTM Easting in Meters	UTM Northing in Meters	Location	Town	County	Bridge Name	Resource Name & Max. Anticipated Impacts (S.F.) to cowardin types and non-wetland waters (RUS)	Anticipated Permitting Levels All are CORPS 404 permitting unless noted
0077	398053	4874310	Old Danville Road	Auburn	Androscoggin	ROYAL RIVER BRIDGE	Royal River 3000 PSS, 1000 RUS	DEP PBR ACOE Cat II
125	584702	5167200	Richardson Road	Easton	Aroostook	PRESTILE STREAM #1	Prestisle Stream 9000 PFO/EM	DEP PBR ACOE Cat II
2403	556684	5095124	Route 2	Island Falls	Aroostook	IRON	5000 PSS/FO on Aligmnent 10000 PSS/FO off alignment.	DEP PBR ACOE Ind. As of April 2009
2898	565173	5105531	Main Street	Oakfield	Aroostook	Village	Mattawamkeag River <7000 PEM/PSS	DEP PBR ACOE Ind. As of April 2009
0168?	585597	5060774	Bancroft Road	Weston	Aroostook	Trout Brook	Trout Brook 3500 PFO 1000 RUS	DEP PBR ACOE Ind. As of April 2009
5340	398774	4848250	Winn Road	Cumberland	Cumberland	RIDEOUT	Mill Brook 6500 PFO/SS	DEP PBR ACOE Cat II
2702	395649	4842677	Route 26/100	Falmouth	Cumberland	RR and River CROSSING	Presumpscot River 18000 PSS wetland impact 4000 RUS	DEP Individual ACOE Cat II
5646	404674	4860324	Hallowell Road/ Route 9	Pownal	Cumberland	POWNAL CENTER	E Branch Royal River 5000 PSS/EM	DEP PBR ACOE Cat II
3945	396452	4832981	Route 1	South Portland	Cumberland	VETERANS MEMORIAL	Fore River 5000 EUS Intertidal flats, cobble gravel, adjacnet to shellfish	Condition requiring agency review and approval of plans prior to construction.
3987	392783	4839316	E. Bridge Street	Westbrook	Cumberland	LITTLE	Mill Brook 3000 PEM	DEP PBR ACOE Cat II
2004	408841	4946157	Route 4/27/43	Farmington	Franklin	Abbot	Abbott Brook 2000 PSS	DEP PBR ACOE Ind. As of April 2009
2311	410348	4945082	Route 2/27	Farmington	Franklin	Gilbert Brook	Gilbert Brook 1000 PEM, 1000 RUS	DEP PBR ACOE Ind. As of April 2009
0408	422519	4942730	Swan Road	New Sharon	Franklin	SWAN ROAD	Fillibrown Brook 4000 PFO	DEP PBR ACOE Cat II
2594	418424	4944055	Townway Road	New Sharon	Franklin	MUDDY BROOK	Muddy Brook 2000 PSS	DEP PBR ACOE Ind. As of April 2009
5570	560512	4905066	Route 3	Mt Desert	Hancock	STANLEY BROOK	Stanley Brook New Bridge will have no impacts. Possible on site detour	DEP PBR ACOE Cat II SECTION 10
498	441105	4911005	Blair Road	Augusta	Kennebec	BLAIR ROAD	Riggs Brook/LAP less than 4300 PFO/SS	DEP PBR ACOE Cat II
2719	439629	4909699	Route 100/201	Augusta	Kennebec	RIGGS	Riggs Book 2000 RUS	DEP PBR ACOE Cat II
2412	422789	4896235	Cobbosseeconte	Monmouth	Kennebec	JOCK STREAM	Jock Stream Great Pond	DEP PBR ACOE Cat II
5578	490047	4872527	Island Road	South Thomaston	Knox	SPRUCE HEAD	Atlantic Ocean Tidal 4000 Unveg EUS. 1000 EEM Veg. w/o TD - ACOE	DEP PBR Need to be less than 1000 vegitated to stayat ACOE Cat II SECT
2151	344138	4888200	Shave Hill Road	Fryeburg	Oxford	CHARLES RIVER	Charles River 2500 PFO	DEP PBR ACOE Cat II
2708	344924	4887925	McNeil Road	Fryeburg	Oxford	RED IRON	Old Course Saco River 2500 PFO/SS w/ Detour	DEP PBR ACOE Cat II
2917	384032	4931922	Route 2	Mexico	Oxford	WEBB RIVER		DEP PBR ACOE Cat II
5855	347822	4929548	Cobern Fields	Riley Twp	Oxford	BULL BRANCH	Goose Eye Brook 5000 PFO	LURC ACOE Cat II
0792	347791	4929513	Cobern Fields	Riley Twp	Oxford	BULL BRANCH #2	Goose Eye Brook 5000 PFO	LURC ACOE Cat II

Matrix for Juridictional Determination- County, Town , Road, Waterway, and UTM coordinates; and Resource by Cowardin type, and Impact Amounts							Waterway and permit type	
BR#	UTM Easting in Meters	UTM Northing in Meters	Location	Town	County	Bridge Name	Resource Name & Max. Anticipated Impacts (S.F.) to cowardin types and non-wetland waters (RUS)	Anticipated Permitting Levels All are CORPS 404 permitting unless noted
5875	608659	5037044	Vanceboro Road/ Route 6	Codyville Plt	Washington	BEAVER BROOK	Beaver Brook 8000 PEM/SS	LURC ACOE Cat II
3584	596173	5003557	Milford Street	Grand Lake Stream Plt	Washington	MILFORD STREET	Grand Lake Stream 1000 PEM. 3000 RUS w/ TD	LURC ACOE Cat II
2688	611771	5008935	Calais Road, Route 1	Princeton	Washington	PRINCETON	Lewy Lake/ Grand Lake Flowage 10000 PUB/ PEM shorland stabilization to a Great Pond.	DEP Individual ACOE Cat II
5375	624478	4967704	Route 191	Twp 18 Ed Bpp	Washington	SOUTHERN INLET	Southern Inlet 6000 PEM/SS	LURC ACOE Cat II
3462	616915	4953459	Route 1A	Whitneyville	Washington	MACHIAS RIVER	Machias River (North Channel) 4000 PEM/SS	DEP PBR ACOE Ind.
3300	343588	4829846	Acton Bridge Road	Acton	York	BALCH MILLS	Little Ossippee River 3000 PFO	DEP PBR ACOE Cat II
1271	362278	4815379	Back Road	Alfred	York	NUTTER'S	Littlefield River PSS/FO 3000	DEP PBR ACOE Cat II
5825	368769	4815326	Alfred Road/ Route 111	Lyman	York	KENNEBUNK RIVER	Kennebunk River 5000 PEM	DEP PBR ACOE Cat II
1236	359120	4792113	Great Hill Road	South Berwick	York	GREAT HILL BR	Great Works River 3500 PFOw/o TD	DEP PBR ACOE Cat II
5610	354481	4786352	Dow Highway/ Route 236	South Berwick	York	GREAT WORKS RIVER	Great Works River 7000 PFO/SS w/o TD	DEP PBR ACOE Cat II
3096	364948	4777253	Organug Road	York	York	SEWALLS	Tidal w/ Shellfish 1000 EUS Shellfish 5000 Tidal	DEP PBR ACOE Cat II SECTION 10
5848	365803	4776595	Route 103	York	York	Station 34	1614 EUS Mudflat without shellfish	DEP PBR ACOE Ind. SECTION 10