STATE OF MAINE
DEPARTMENT OF TRANSPORTATION
16 STATE HOUSE STATION
AUGUSTA, MAINE
04333-0016

JOHN ELIAS BALDACCI
GOVERNOR

DAVID A. COLE
COMMISSIONER

October 17, 2006
Subject: **Calais-St. Stephens**
Project Number: NCPD/CBI-8483(360)X
PIN: 8483.36
Bid Amendment No. 2

Dear Sir/Ms.:

Please make the following changes to the Bid Documents:

Delete the "Schedule of Items" dated 060922; six pages total, and replace with the attached "Schedule of Items" dated 061017; six pages total.

Please make the following changes to the plan sheets:

Delete plan sheet numbers 2, 32, 33, & 34 of 47, and replace with the attached plan sheets, numbers 2, 32, 33, & 34 of 47, revision date of Oct. 16, 2006.

The Department has received the following questions:

Question: Pre-stressing strand size, location and Quantity?

Response: *The number of pre-stressing strands has been reduced to 44. Eight strands shall be draped and the remaining 36 will form 3 rows of 12 strands. All strands shall be 15.24 mm (0.6 in) diameter, Low Relaxation 1861 MPa (270 ksi) strands. The strands shall be pulled to 0.75 fpu (1396 MPa, 202.5 ksi). Four strands from the first layer (bottom most) shall be debonded 6 meters. Four strands from the second layer shall be debonded 3 meters. Two strands from the third layer shall be debonded 1.5 meters.*

The top 6 straight strands shall be pulled to only 9 kN (2 kips) to maintain a straight profile along the length of the girder.

Please see new plan sheet 32 of 47 as addressed in this amendment.

PRINTED ON RECYCLED PAPER
THE MAINE DEPARMENT OF TRANSPORTATION IS AN AFFIRMATIVE ACTION - EQUAL OPPORTUNITY EMPLOYER

Question: Abutment Diaphragm sheets 34 and 35 of 47; clarify U bars and Modified U bars. Are they #16 or #19? Is Rebar for Transition barrier MMFX2?

Response: *All U bars and modified U bars in the overhang section of the deck shall be #19 bars. Rebar for Transition Barriers shall also be MMFX2.*

Question: Steel insert and bolt type for Horizontal inserts in Precast Girders.

Response: *All horizontal inserts in the Precast Girder for future utility needs shall be Stainless steel and provided with a stainless steel bolt. The bolt shall meet the requirements of ASTM F738 Class Ax-70 (F593 Alloy Group 1 Condition CW).*

Question: What is the approximate timing of this project?
When is it likely to start?

Response: *Construction should begin in November or December.*

Question: When is it due to be complete?

Response: *See Special Provision 107.1.1 Time*

Question: Are there additional Maine DOT projects related to this one? What? When?

Response: *Yes, Maine DOT will have one or more additional contracts for the Approach work, the contract should advertise in November.*

Question: Are there additional non-Maine DOT projects related to this one that you may be aware of? What? When?

Response: *Yes, a GSA facility should be advertising spring 2007, and a Canadian Facility will be built as well for timing you should talk to the Canadian Government.*

Question: Please confirm quantities for item 206.10 and 502.24. They appear high.

Response: *Item 206.10 should have a quantity of 3,000 M3, and Item 502.24 should have a quantity of 2,900 M3, as addressed in this amendment.*

Question: Is the contractor access corridor as shown on sheet # 47 installed by others to the limit line shown on sheet # 3?

Response: *No, it is the area available for the contractor to access the site, and the contractor is responsible for building the access that they need within the area provided.*

Question: Will it be paid for under unit price item?

Response: *No.*

Question: Does it need to be removed upon project completion?

Response: *No*

Question: Are there any requirements for its construction?

Response: *No, the road is for the contractor to access the site. You will still need to meet BMP and environmental requirements.*

Question: Are there any analyticals for the dredged materials not to be beneficially used?

Response: *No analyticals.*

Question: Will the requirements for the preparer under section 656.3.1 apply to the item 656.75, or will the contractor be required to use a New Brunswick "Professional" for the Canadian portion of the plan.

Response: *The preparer requirements in Standard Specification Section 656.3.1 will apply for the entire project..*

Question: Ref. Section 504.04, will a Canadian fabrication facility with equivalent certifications be allowed for fabricated items?

Response: *If a Canadian fabrication facility is used it will have to have the appropriate AISC Certification or MDOT Certification for the appropriate components listed in 504.04 of the Standard Specification.*
Contact Maine DOT Fabrication Engineer for additional information regarding Maine DOT certification. Minimum of 6 weeks lead time required

Consider these changes and information prior to submitting your bid on October 25, 2006.

Sincerely,

Scott Bickford
Contracts & Specifications Engineer

CONTRACT ID: 008483.36 PROJECT(S): NCPD/CBI-8483(360)X

CONTRACTOR :_____

SECTION 0001 Main Item

LINE NO	ITEM DESCRIPTION	APPROX. QUANTITY AND UNITS	UNIT PRICE DOLLARS	UNIT PRICE CTS	BID AMOUNT DOLLARS	BID AMOUNT CTS
0010	201.11 CLEARING	2.000 HA				
0020	203.20 COMMON EXCAVATION	50.000 M3				
0030	203.2318 DISPOSAL OF SPECIAL WASTE	100.000 MG				
0040	203.24 COMMON BORROW	7500.000 M3				
0050	203.25 GRANULAR BORROW	1615.000 M3				
0060	206.082 STRUCTURAL EARTH EXCAVATION - MAJOR STRUCTURES	1200.000 M3				
0070	206.092 STRUCTURAL ROCK EXCAVATION - MAJOR STRUCTURES	30.000 M3				
0080	206.10 STRUCTURAL EARTH EXCAVATION - PIERS	3000.000 M3				
0090	304.10 AGGREGATE SUBBASE COURSE - GRAVEL	2143.000 M3				
0100	501.231 DYNAMIC LOADING TEST	3.000 EA				

CONTRACT ID: 008483.36 PROJECT(S): NCPD/CBI-8483(360)X

CONTRACTOR :_____

LINE NO	ITEM DESCRIPTION	APPROX. QUANTITY AND UNITS	UNIT PRICE DOLLARS	UNIT PRICE CTS	BID AMOUNT DOLLARS	BID AMOUNT CTS
0110	501.50 STEEL H-BEAM PILES 132 KG/M, DELIVERED	425.000 M				
0120	501.501 STEEL H-BEAM PILES 132 KG/M, IN PLACE	425.000 M				
0130	501.90 PILE TIPS	48.000 EA				
0140	501.91 PILE SPLICES	12.000 EA				
0150	501.92 PILE DRIVING EQUIPMENT MOBILIZATION	LUMP	LUMP			
0160	502.21 STRUCTURAL CONCRETE, ABUTMENTS AND RETAINING WALLS	190.000 M3				
0170	502.219 STRUCTURAL CONCRETE, ABUTMENTS AND RETAINING WALLS	LUMP	LUMP			
0180	502.239 STRUCTURAL CONCRETE PIERS	LUMP	LUMP			
0190	502.24 STRUCTURAL CONCRETE PIERS (PLACED UNDER WATER)	2900.000 M3				
0200	502.261 SRRUCTURAL CONCRETE ROADWAY & SIDEWALK SLAB ON CONCRETE BRIDGES	LUMP	LUMP			

CONTRACT ID: 008483.36 PROJECT(S): NCPD/CBI-8483(360)X

CONTRACTOR :_____

LINE NO	ITEM DESCRIPTION	APPROX. QUANTITY AND UNITS	UNIT PRICE DOLLARS	UNIT PRICE CTS	BID AMOUNT DOLLARS	BID AMOUNT CTS
0210	502.29 STRUCTURAL CONCRETE WEARING SURFACE ON BRIDGES	LUMP	LUMP			
0220	502.31 STRUCTURAL CONCRETE APPROACH SLABS	LUMP	LUMP			
0230	502.49 STRUCTURAL CONCRETE CURBS AND SIDEWALKS	LUMP	LUMP			
0240	503.12 REINFORCING STEEL, FABRICATED AND DELIVERED	370000.000 KG				
0250	503.13 REINFORCING STEEL, PLACING	370000.000 KG				
0260	503.24 MMFX 2 REINFORCING STEEL, FABRICATED & DELIVERED	9600.000 KG				
0270	503.25 MMFX 2 REINFORCING STEEL, PLACING	9600.000 KG				
0280	507.0811 STEEL BRIDGE RAILING, 2 BAR	LUMP	LUMP			
0290	511.07 COFFERDAM: ABUT. NO. 1	LUMP	LUMP			
0300	511.07 COFFERDAM: ABUT. NO. 2	LUMP	LUMP			
0310	511.07 COFFERDAM: PIER NO. 1	LUMP	LUMP			

CONTRACT ID: 008483.36 PROJECT(S): NCPD/CBI-8483(360)X

CONTRACTOR :_____

LINE NO	ITEM DESCRIPTION	APPROX. QUANTITY AND UNITS	UNIT PRICE DOLLARS	UNIT PRICE CTS	BID AMOUNT DOLLARS	BID AMOUNT CTS
0320	511.07 COFFERDAM: PIER NO. 2	LUMP	LUMP			
0330	511.07 COFFERDAM: PIER NO. 3	LUMP	LUMP			
0340	512.081 FRENCH DRAINS	LUMP	LUMP			
0350	514.06 CURING BOX FOR CONCRETE CYLINDERS	1.000 EA				
0360	515.21 PROTECTIVE COATING FOR CONCRETE SURFACES	LUMP	LUMP			
0370	520.21 EXPANSION DEVICE - GLAND SEAL	4.000 EA				
0380	523.52 BEARING INSTALLATION	80.000 EA				
0390	523.5401 LAMINATED ELASTOMERIC BEARINGS, FIXED	60.000 EA				
0400	523.5402 LAMINATED ELASTOMERIC BEARINGS, EXPANSION	20.000 EA				
0410	526.301 TEMPORARY CONCRETE BARRIER TYPE I	LUMP	LUMP			
0420	526.34 PERMANENT CONCRETE TRANSITION BARRIER	8.000 EA				

CONTRACT ID: 008483.36 PROJECT(S): NCPD/CBI-8483(360)X

CONTRACTOR :_____

LINE NO	ITEM DESCRIPTION	APPROX. QUANTITY AND UNITS	UNIT PRICE DOLLARS	UNIT PRICE CTS	BID AMOUNT DOLLARS	BID AMOUNT CTS
0430	535.61 PRESTRESSED STRUCTURAL CONCRETE I-GIRDERS	LUMP	LUMP			
0440	607.2350 CHAIN LINK FENCE - 3.7 M	230.000 M				
0450	610.08 PLAIN RIPRAP	1100.000 M3				
0460	613.319 EROSION CONTROL BLANKET	100.000 M2				
0470	615.07 LOAM	80.000 M3				
0480	618.1401 SEEDING METHOD NUMBER 2 - PLAN QUANTITY	16.000 UN				
0490	618.15 TEMPORARY SEEDING	10.000 KG				
0500	619.1201 MULCH - PLAN QUANTITY	16.000 UN				
0510	620.58 EROSION CONTROL GEOTEXTILE	1000.000 M2				
0520	626.21 METALLIC CONDUIT	6.000 M				
0530	626.22 NON-METALLIC CONDUIT	43.000 M				

CONTRACT ID: 008483.36 PROJECT(S): NCPD/CBI-8483(360)X

CONTRACTOR :_____

LINE NO	ITEM DESCRIPTION	APPROX. QUANTITY AND UNITS	UNIT PRICE DOLLARS	UNIT PRICE CTS	BID AMOUNT DOLLARS	BID AMOUNT CTS
0540	629.05 HAND LABOR, STRAIGHT TIME	100.000 HR				
0550	631.12 ALL PURPOSE EXCAVATOR (INCLUDING OPERATOR)	10.000 HR				
0560	631.172 TRUCK - LARGE (INCLUDING OPERATOR)	10.000 HR				
0570	634.2511 SERVICE POLE - 7.6 M	2.000 EA				
0580	638.01 EMBEDDED WORK IN STRUCTURES	LUMP	LUMP			
0590	639.18 FIELD OFFICE TYPE A	2.000 EA				
0600	652.38 FLAGGER	100.000 HR				
0610	652.39 WORK ZONE TRAFFIC CONTROL	LUMP	LUMP			
0620	656.75 TEMPORARY SOIL EROSION AND WATER POLLUTION CONTROL	LUMP	LUMP			
0630	659.10 MOBILIZATION	LUMP	LUMP			
0640	890.01 SPECIAL WORK #1	LUMP	LUMP			
	TOTAL BID					

ALL UNIT PRICES AND BID AMOUNTS MUST BE IN UNITED STATES CURRENCY. SEE SPECIAL PROVISION SECTION 108.2.2.1 (PAYMENT IN UNITED STATES CURRENCY)

ESTIMATED QUANTITIES

ITEM NO.	DESCRIPTION	QUANTITY	UNIT
201.11	CLEARING	2	HA
203.20	COMMON EXCAVATION	50	M3
203.2318	DISPOSAL OF SPECIAL WASTE	100	MG
203.24	COMMON BORROW	7 500	M3
203.25	GRANULAR BORROW	1 615	M3
206.082	STR EARTH EXC - MAJOR STRUCTURES	1 200	M3
206.092	STR ROCK EXC - MAJOR STRUCTURES	30	M3
△1 206.10	STR EARTH EXC - PIERS	3 000	M3
304.10	AGGR SUBBASE COURSE - GRAVEL	2 143	M3
△1 501.231	DYNAMIC LOADING TEST	3	EA
501.50	STEEL H-BEAM PILES 132 KG/M, DELIVERED	425	M
501.501	STEEL H-BEAM PILES 132 KG/M, IN PLACE	425	M
501.90	PILE TIPS	48	EA
501.91	PILE SPLICES	12	EA
501.92	PILE DRIVING EQUIPMENT MOBILIZATION	1	LS
502.21	STR CONC ABUT & RET WALL	190	M3
502.219	STR CONC ABUT & RET WALL (1 045 M3)	1	LS
502.239	STR CONC PIERS (2 010 M3)	1	LS
△1 502.24	STR CONC PIERS UNDER WATER	2 900	M3
502.261	STR CONC RD&SW SLAB ON CONC BR (1 302 M3)	1	LS
502.29	STR CONC WEARING SUR ON BR (208 M3)	1	LS
502.31	STR CONC APPROACH SLAB (44 M3)	1	LS
502.49	STRUCT. CONCRETE CURBS AND SIDEWALKS (89 M3)	1	LS
503.12	REINF STEEL, FAB & DEL	370 000	KG
503.13	REINF STEEL, PLACING	370 000	KG
503.24	MMFX 2 REINF STEEL, FAB & DEL	9 600	KG
503.25	MMFX 2 REINF STEEL, PLACING	9 600	KG
507.0811	STEEL BRIDGE RAILING, 2 BAR (682 M)	1	LS
511.07	COFFERDAM: ABUT. NO. 1	1	LS
511.07	COFFERDAM: ABUT. NO. 2	1	LS
511.07	COFFERDAM: PIER NO. 1	1	LS
511.07	COFFERDAM: PIER NO. 2	1	LS
511.07	COFFERDAM: PIER NO. 3	1	LS
512.081	FRENCH DRAINS (140 M)	1	LS
514.06	CURING BOX FOR CONC CYLINDERS	1	EA
515.21	PROTECTIVE COAT FOR CONC SURFACES (4 880 M2)	1	LS
520.21	EXPANSION DEVICE - GLAND SEAL	4	EA
△1 523.52	BEARING INSTALLATION	80	EA
523.5401	LAMINATED ELASTOMERIC BEARINGS, FIXED	60	EA
523.5402	LAMINATED ELASTOMERIC BEARINGS, EXPANSION	20	EA
526.301	TEMPORARY CONCRETE BARRIER, TYPE 1 (55 M)	1	LS
526.34	PERMANENT CONC TRANSITION BARRIER	8	EA
535.61	PRESTRESSED STR CONC I-GIRDER (1 707 M)	1	LS
607.235	CHAIN LINK FENCE, 3.7 M	230	M
610.08	PLAIN RIPRAP	1 100	M3
613.319	EROSION CONTROL BLANKET	100	M2
615.07	LOAM	80	M3
618.1401	SEEDING METHOD NUMBER 2 - PLAN QUANTITY	16	UN
618.15	TEMPORARY SEEDING	10	KG
619.1201	MULCH - PLAN QUANTITY	16	UN
620.58	EROSION CONTROL GEOTEXTILE	1 000	M2
626.21	METALLIC CONDUIT	6	M
626.22	NON - METALLIC CONDUIT	43	M
629.05	HAND LABOR, STRAIGHT TIME	100	HR
631.12	ALL-PURPOSE EXC (INC OPERATOR)	10	HR
631.172	TRUCK-LARGE (INC OPERATOR)	10	HR
634.251	SERVICE POLE, 7.6 M	2	EA
638.01	EMBEDDED WORK IN STRUCTURES	1	LS
639.18	FIELD OFFICE TYPE A	2	EA
652.38	FLAGGER	100	HR
652.39	WORK ZONE TRAFFIC CONTROL	1	LS
656.75	TEMP. SOIL EROSION AND WATER POLLUTION CONTROL	1	LS
659.10	MOBILIZATION	1	LS
890.01	SPECIAL WORK #1	1	LS

ESTIMATED QUANTITIES

ITEM NO.	DESCRIPTION	QUANTITY	UNIT

GENERAL CONSTRUCTION NOTES

1. For easements, construction limits, and right - of - way lines, refer to the Construction Access Plan.

2. The Canadian approach road is currently under construction and will be available for access to the bridge site.

3. Place a 600 mm wide strip of temporary erosion control blanket on the side slopes along the top of the riprap and behind the wingwalls.

4. Place loam 50 mm deep on all sideslopes.

5. Protective coating for concrete surfaces shall be applied to the following areas:

All exposed surfaces of concrete curbs and median.
Fascias down to the drip notch.
All exposed surfaces of concrete transition barriers.
Concrete wearing surfaces.
Top of abutment backwalls and to 300 mm below the top of backwalls on the back side.

6. Place riprap on sideslopes up to elevation 24.5.

7. Construct the riprap shelf at each abutment at elevation 24.5.

8. Bidders and Contractors may obtain a copy of the Hydrology and Hydraulic Report of the bridge site by contacting the Project Manager. The report is based on the Department's interpretation of information obtained for the subject site. No assurance is given that the information or the conclusions of the report will be representative of actual conditions at the time of construction.

9. Bidders and Contractors may obtain a copy of the project Geotechnical Report, "Report on Proposed St. Croix River Bridge Project, PIN 8483.32, 8 February 2005, File No. 30059-001," by contacting the Project Manager.

10. Geotechnical Information furnished or referred to in this plan set is for the Bidder's and Contractor's use. No assurance is given that the information or interpretations will be representative of actual subsurface conditions at the time of construction. The Department will not be responsible for the Bidder's and Contractor's interpretations of, or conclusions drawn from, the Geotechnical Information. The boring logs contained in the plan set present factual and interpretive subsurface information collected at discrete locations. Data provided may not be representative of the subsurface conditions between boring locations.

11. Reinforcing Steel Schedules will be the responsibility of the Contractor. Refer to Subsection 503.03 of the Standard Specifications for more information. Payment for all work associated with developing reinforcing steel schedules will be considered incidental to the related contract items.

12. Bending details and hooks for reinforcing steel shall conform to the recommendations of the current revision of ACI Standards 315 and 318.

13. Minimum splice lengths for plain reinforcing steel not otherwise shown shall be as given the table in Subsection 503.07 of the Standard Specifications.

14. All reinforcing steel in the curbs and median, which includes the longitudinal straight bars and the vertical stirrups, shall be MMFX 2 rebar. Payment will be made under the appropriate reinforcing steel pay items.

15. All reinforcing steel in the transition barriers shall be MMFX 2 rebar. No separate payment will be made.

△1 16. Payment for Abutment No. 2 Footing only will be made under Item No. 502.21, Structural Concrete Abutments and Retaining Walls (Cubic Meter). All other abutment concrete will be paid for under Item No. 502.219, Stuctural Concrete Abutments and Retaining Walls (Lump Sum).

17. At the option of the Contractor, one field office structure with the floor area equivalent of two Field Office Type A may be supplied, as approved by the Resident. Payment for a single combined structure will be based on the contract bid price for two Field Office Type A.

BRIDGE NO. 6440

STATE OF MAINE
DEPARTMENT OF TRANSPORTATION

ST. CROIX RIVER BRIDGE
OVER
ST. CROIX RIVER
BETWEEN
ST. STEPHEN, N.B., CANADA
CALAIS, MAINE, U.S.A.

ESTIMATED QUANTITIES

AUGUSTA, MAINE

REVISIONS

△1 Rev. Oct. 16, 2006

Filename: ...\MSTA\002_Revised_Estimate.dgn Division: BRIDGE Username: dana.damren Date:10/16/2006

PROJECT DESIGN ENGINEER | BY | DATE
DESIGN-DETAILED | M. A. Iqbal | ------
CHECKED | Team 4 & 5 | ------
REVISIONS | ------ | ------
FIELD CHANGES | ------ | ------
PLANS

METRIC	1. All dimensions are in millimeters unless otherwise noted. 2. All elevations and stations are in meters.	F.H.W.A. REG. NO.	STATE	PROJECT NUMBER	SHEET NO.	TOTAL SHEETS
		1	MAINE	NCPD\CBI-8483(360)X	32	47

8483.36

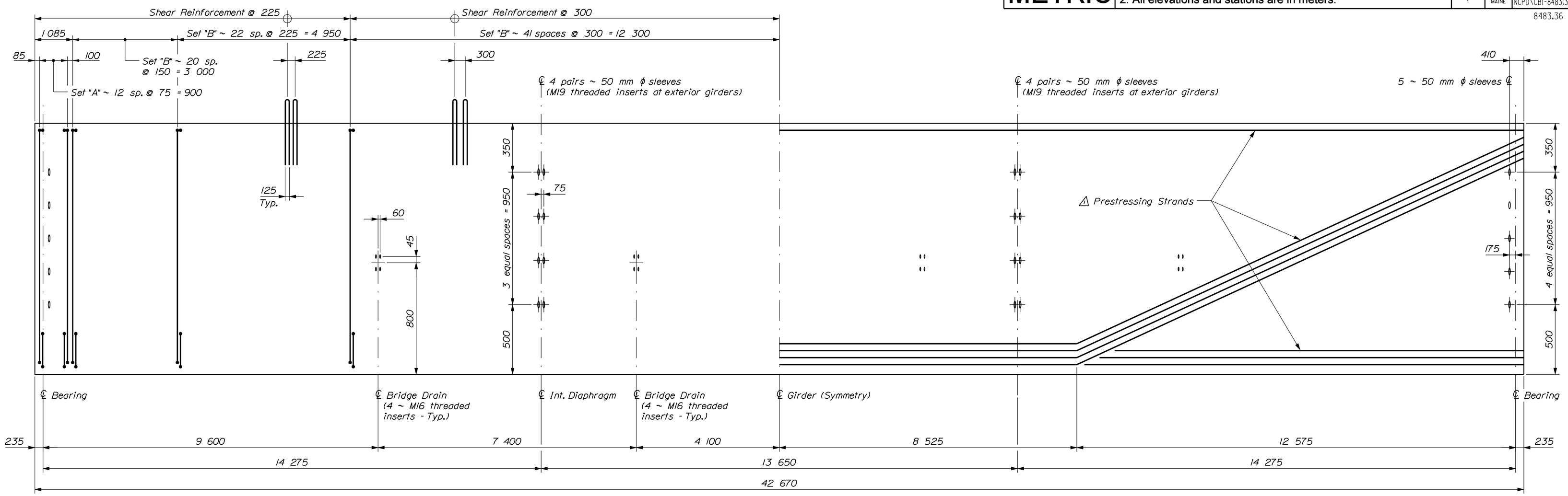

TYPICAL GIRDER ELEVATION

Vertical Exaggeration 4 : 1

Bridge Drain spacing shown for Spans No. 2 & 3

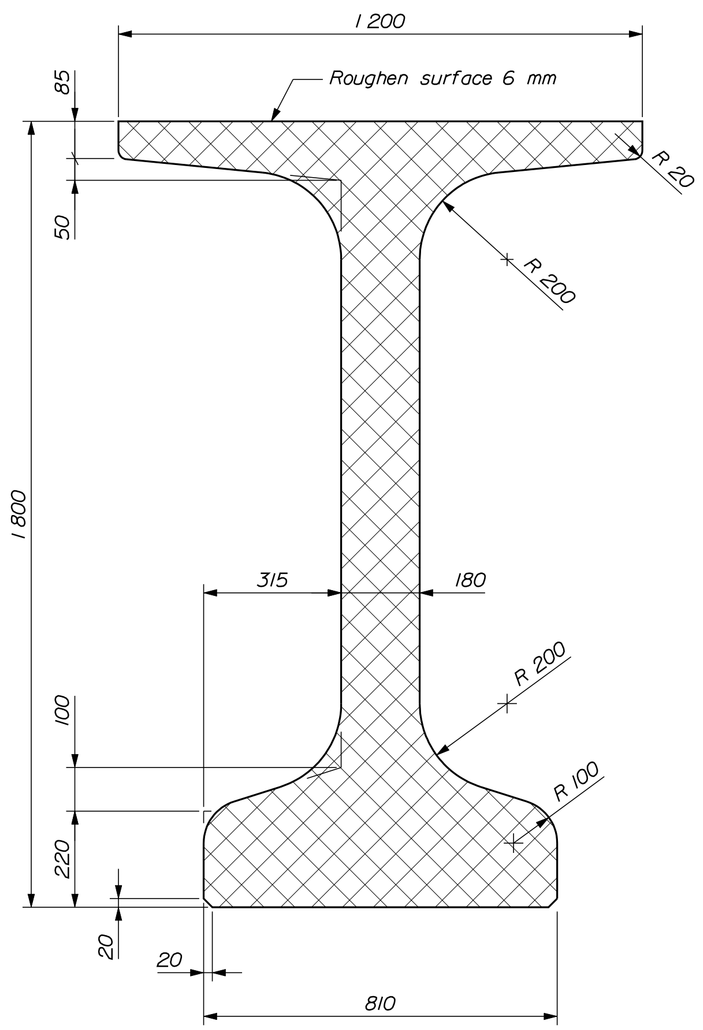

TYPICAL GIRDER SECTION

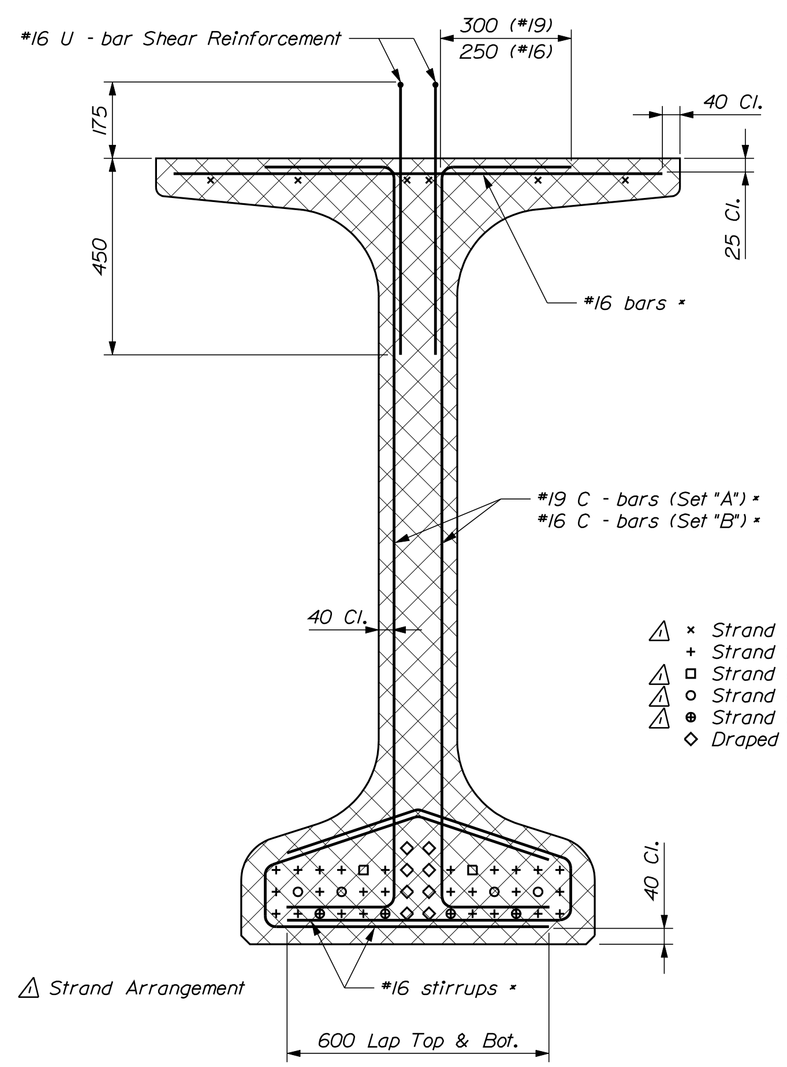

△1 × Strand stressed to 9 kN
+ Strand fully bonded
△1 □ Strand debonded 1 500 mm
△1 ○ Strand debonded 3 000 mm
△1 ⊕ Strand debonded 6 000 mm
◇ Draped strand

GIRDER REINFORCING

* Bars included in Sets "A" & "B"

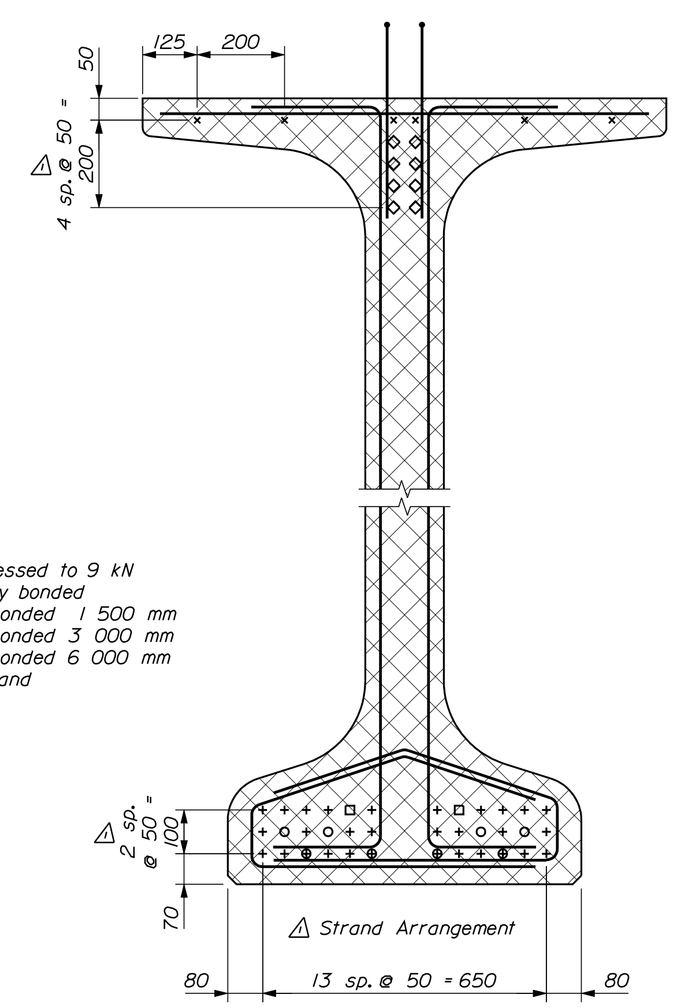

PRESTRESSING STRANDS

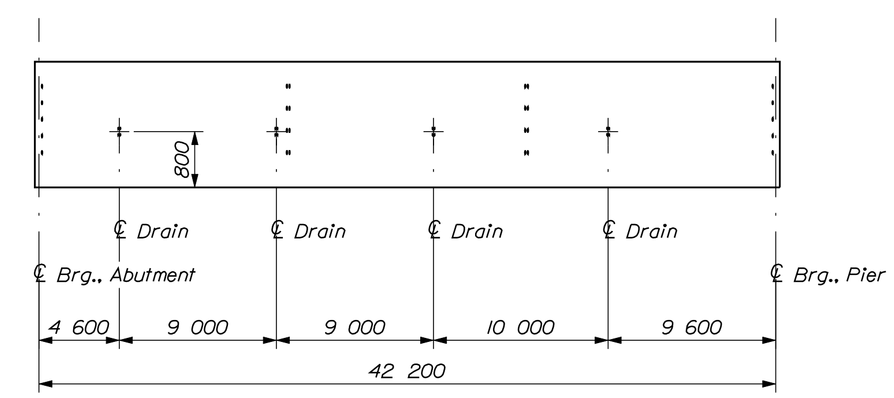

END SPAN GIRDER ELEVATION

Bridge Drain spacing shown for Spans No. 1 & 4

PROJECT DESIGN ENGINEER	BY	DATE
DESIGN-DETAILED	M. A. Iqbal	
CHECKED	Team 4 & 5	
REVISIONS	------	------
FIELD CHANGES	------	------

PLANS

REVISIONS
△1 Rev. Oct. 16, 2006

BRIDGE NO. 6440

STATE OF MAINE
DEPARTMENT OF TRANSPORTATION

ST. CROIX RIVER BRIDGE
OVER
ST. CROIX RIVER
BETWEEN
ST. STEPHEN, N.B., CANADA
CALAIS, MAINE, U.S.A.

PRECAST GIRDERS

AUGUSTA, MAINE

Filename: ...\032_Revised_Precast_Girders.dgn Division: BRIDGE Username: dana.damren Date:10/16/2006

METRIC	1. All dimensions are in millimeters unless otherwise noted. 2. All elevations and stations are in meters.	F.H.W.A. REG. NO.	STATE	PROJECT NUMBER	SHEET NO.	TOTAL SHEETS
		1	MAINE	NCPD\CBI-8483(360)	X 33	47

8483.36

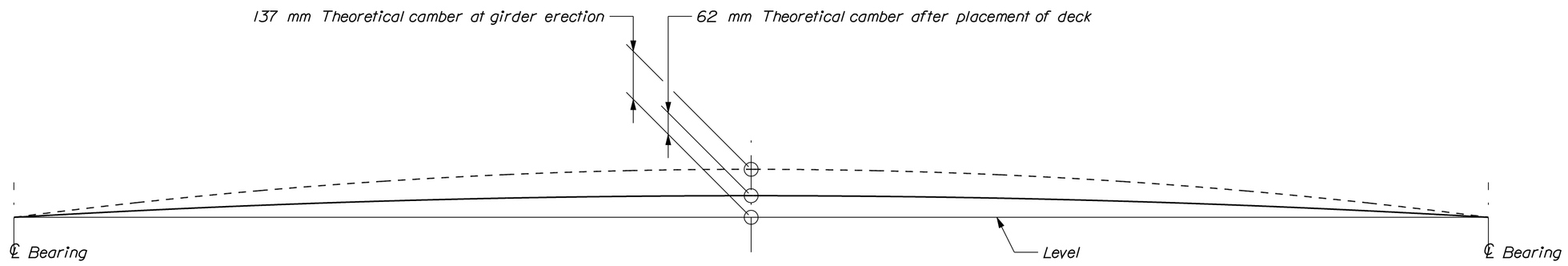

CAMBER DIAGRAM

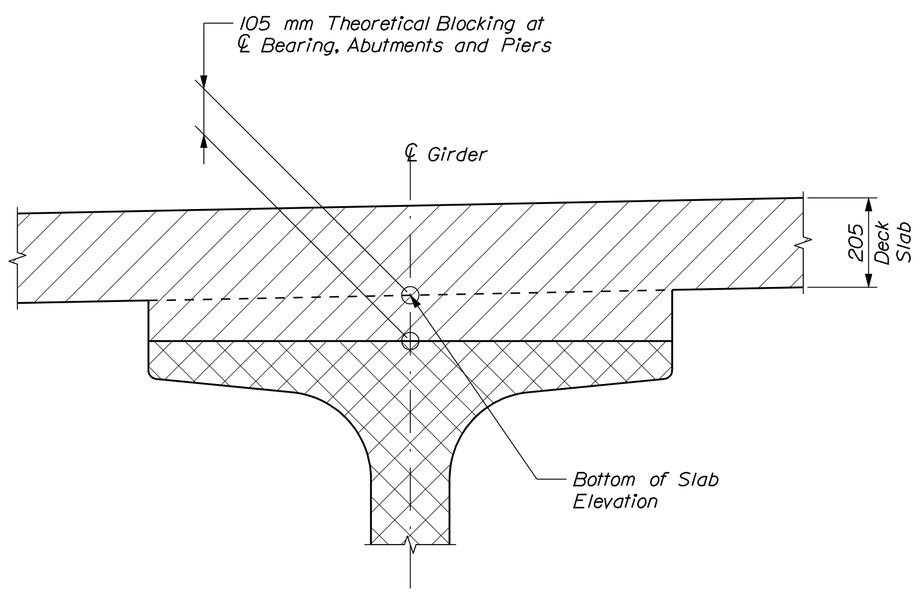

BLOCKING DETAIL

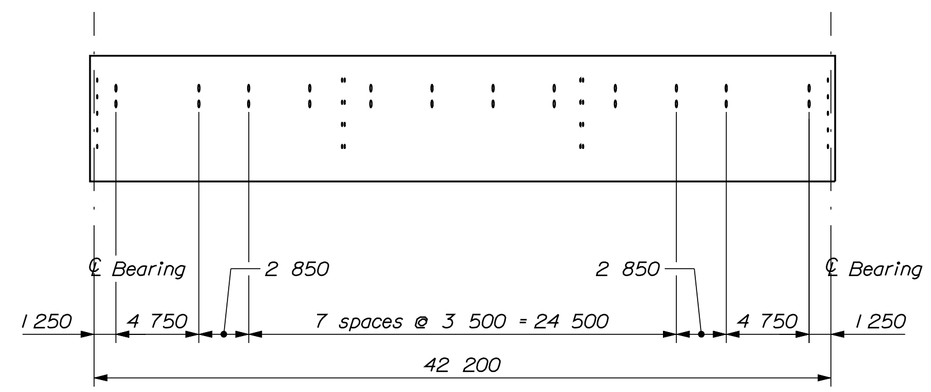

ELEVATION ~ GIRDER UTILITY INSERTS

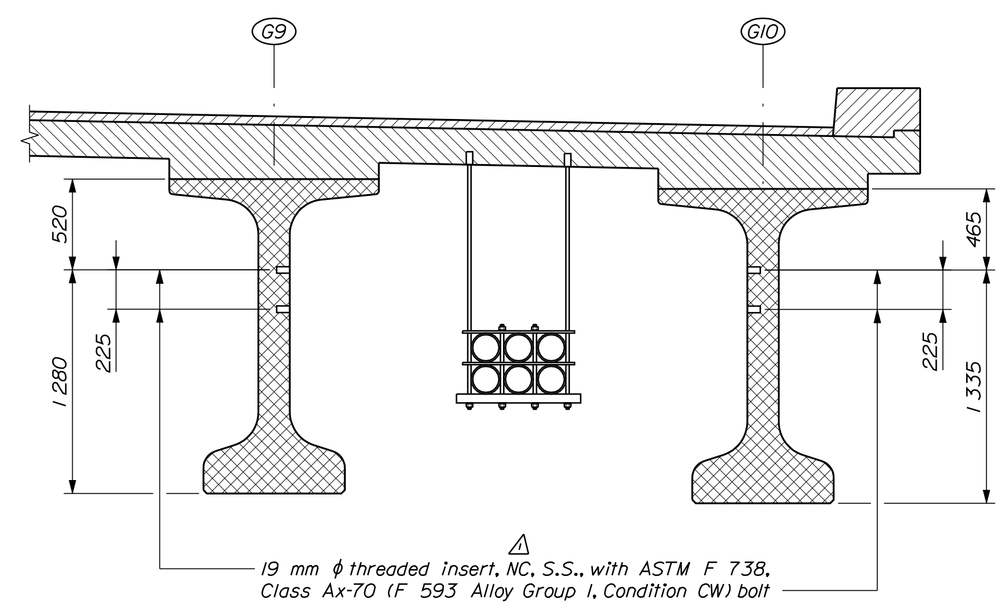

GIRDER UTILITY INSERTS

BOTTOM OF SLAB ELEVATIONS

Location	Girder G1 & G10	Girder G2 & G9	Girder G3 & G8	Girder G4 & G7	Girder G5 & G6
℄ Brg., Abut. No. 1	30.155	30.211	30.267	30.323	30.379
0.1 Span	30.162	30.218	30.274	30.330	30.386
0.2 Span	30.158	30.214	30.270	30.326	30.382
0.3 Span	30.144	30.199	30.255	30.311	30.367
0.4 Span	30.118	30.174	30.230	30.286	30.342
0.5 Span	30.081	30.137	30.193	30.249	30.305
0.6 Span	30.033	30.089	30.145	30.201	30.257
0.7 Span	29.975	30.031	30.087	30.143	30.199
0.8 Span	29.905	29.961	30.017	30.073	30.129
0.9 Span	29.825	29.881	29.937	29.993	30.049
℄ Brg., Pier No. 1, Sp. 1	29.733	29.789	29.845	29.901	29.957
℄ Brg., Pier No. 1, Sp. 2	29.725	29.781	29.837	29.893	29.949
0.1 Span	29.732	29.788	29.844	29.900	29.956
0.2 Span	29.728	29.784	29.840	29.896	29.952
0.3 Span	29.713	29.769	29.825	29.881	29.937
0.4 Span	29.688	29.744	29.800	29.856	29.912
0.5 Span	29.651	29.707	29.763	29.819	29.875
0.6 Span	29.603	29.659	29.715	29.771	29.827
0.7 Span	29.545	29.601	29.657	29.713	29.769
0.8 Span	29.475	29.531	29.587	29.643	29.699
0.9 Span	29.395	29.451	29.507	29.563	29.619
℄ Brg., Pier No. 2, Sp. 2	29.303	29.359	29.415	29.471	29.527
℄ Brg., Pier No. 2, Sp. 3	29.295	29.351	29.407	29.463	29.519
0.1 Span	29.302	29.358	29.414	29.470	29.526
0.2 Span	29.298	29.354	29.410	29.466	29.522
0.3 Span	29.283	29.339	29.395	29.451	29.507
0.4 Span	29.258	29.314	29.370	29.426	29.482
0.5 Span	29.221	29.277	29.333	29.389	29.445
0.6 Span	29.173	29.229	29.285	29.341	29.397
0.7 Span	29.115	29.171	29.227	29.283	29.339
0.8 Span	29.045	29.101	29.157	29.213	29.269
0.9 Span	28.965	29.021	29.077	29.133	29.189
℄ Brg., Pier No. 3, Sp. 3	28.873	28.929	28.985	29.041	29.097
℄ Brg., Pier No. 3, Sp. 4	28.865	28.921	28.977	29.033	29.089
0.1 Span	28.872	29.928	28.984	29.040	29.096
0.2 Span	28.868	28.924	28.980	29.036	29.092
0.3 Span	28.853	28.909	29.965	29.021	29.077
0.4 Span	28.828	28.884	28.940	28.996	29.052
0.5 Span	28.791	28.847	28.903	28.959	29.015
0.6 Span	28.743	28.799	28.855	28.911	28.967
0.7 Span	28.685	28.741	28.797	28.853	28.909
0.8 Span	28.615	28.671	28.727	28.783	28.839
0.9 Span	28.535	28.591	28.647	28.703	28.759
℄ Brg., Abut. No. 2	28.443	28.499	28.555	28.611	28.667

PRECAST GIRDER NOTES

1. Prestressing strands shall be 15.24 mm (0.6 inch) diameter. The bottom 36 strands and the eight draped strands shall be pulled to 0.75 fpu (1 396 MPa, 202.5 ksi).
2. The tensioning force of the top six strands shall be 9 kN (2 kips) to maintain a straight profile along the length of the girder.
3. All reinforcing steel in the girders shall be epoxy coated.
4. Drain inserts are required only on the inside face of exterior girders G1 and G10.
5. Utility inserts are required only on girders G9 and G10 as shown.
6. Payment for inserts will be considered incidental to the precast concrete girder pay item.
7. All inserts shall be installed in accordance with the manufacturer's recommendations.
8. Girder concrete permeability shall not exceed 2 000 coulombs.

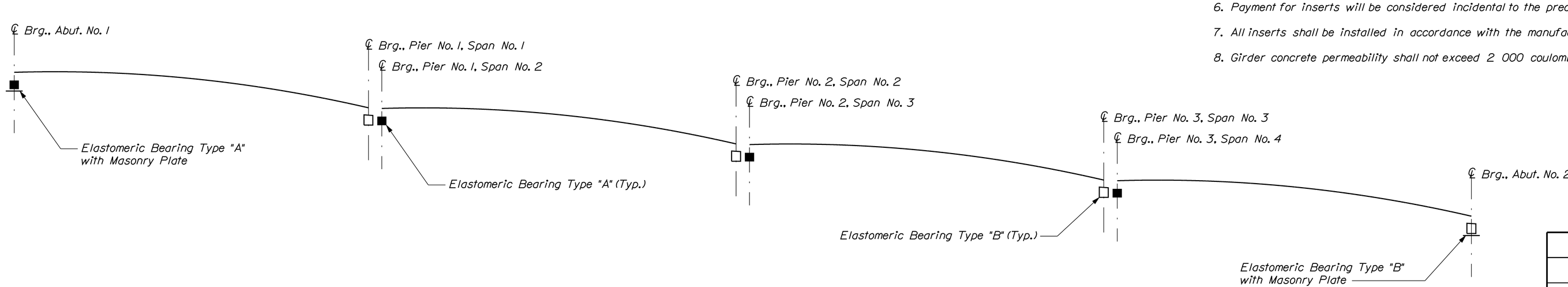

BEARING LAYOUT DETAIL

REVISIONS
△1 Rev. Oct. 16, 2006

BRIDGE NO. 6440

STATE OF MAINE
DEPARTMENT OF TRANSPORTATION

ST. CROIX RIVER BRIDGE
OVER
ST. CROIX RIVER
BETWEEN
ST. STEPHEN, N.B., CANADA
CALAIS, MAINE, U.S.A.

PRECAST GIRDER DETAILS

AUGUSTA, MAINE

PROJECT DESIGN ENGINEER	BY	DATE
DESIGN-DETAILED	M. A. Iqbal	
CHECKED	Team 4 & 5	
REVISIONS	------	------
FIELD CHANGES	------	------

PLANS

Filename: ...\033_Revised_Precast_Girder Details.dgn Division: BRIDGE Username: dana.damren Date:10/16/2006

METRIC	1. All dimensions are in millimeters unless otherwise noted. 2. All elevations and stations are in meters.	F.H.W.A. REG. NO.	STATE	PROJECT NUMBER	SHEET NO.	TOTAL SHEETS
		1	MAINE	NCPD\CBI-8483(360)X	34	47

8483.36

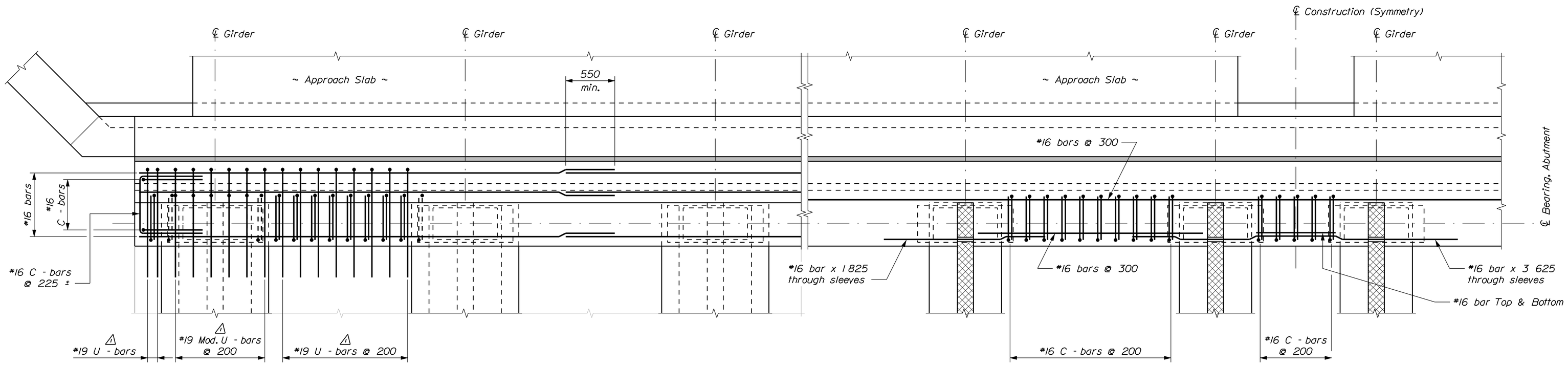

ABUTMENT DIAPHRAGM PLAN

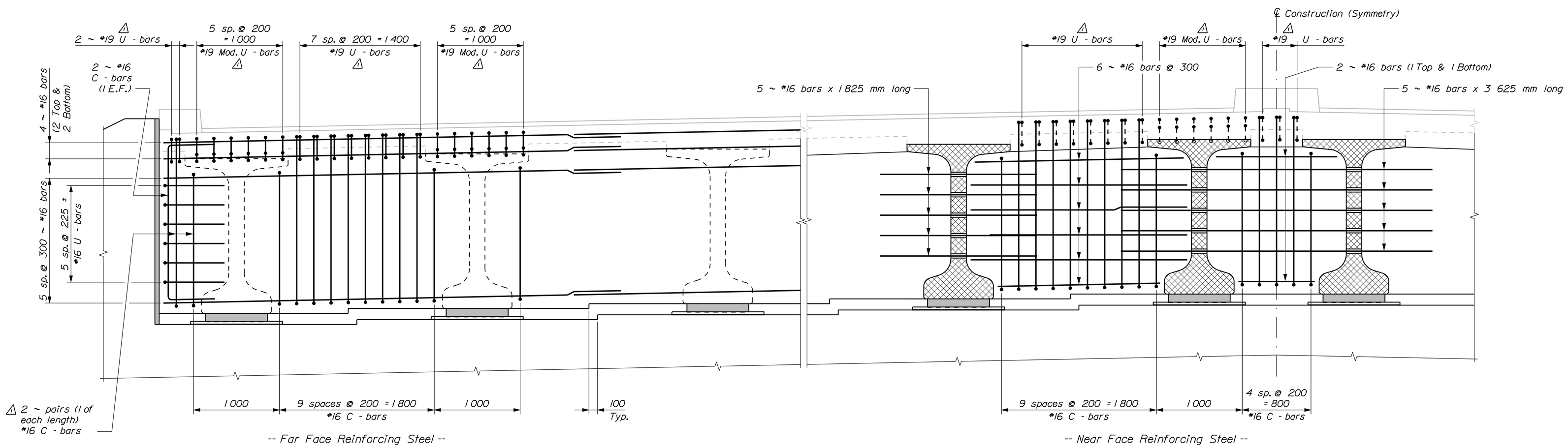

ABUTMENT DIAPHRAGM ELEVATION

Filename: ...\034_Revised_Abutment_Diaphragms.dgn Division: BRIDGE Username: dana.damren Date:10/16/2006

PROJECT DESIGN ENGINEER		BY	DATE
PLANS	DESIGN-DETAILED	M. A. Iqbal	Team 4 & 5
	CHECKED	------	------
	REVISIONS	------	------
	FIELD CHANGES	------	------

BRIDGE NO. 6440

STATE OF MAINE
DEPARTMENT OF TRANSPORTATION

ST. CROIX RIVER BRIDGE
OVER
ST. CROIX RIVER
BETWEEN
ST. STEPHEN, N.B., CANADA
CALAIS, MAINE, U.S.A.

ABUTMENT DIAPHRAGMS

AUGUSTA, MAINE

REVISIONS

△1 Rev. Oct. 16, 2006