STATE OF MAINE
DEPARTMENT OF TRANSPORTATION
16 STATE HOUSE STATION
AUGUSTA, MAINE
04333-0016

JOHN ELIAS BALDACCI
GOVERNOR

DAVID A. COLE
COMMISSIONER

November 12, 2004
Subject: Rest Area Improvements-
Statewide
Project No. 1124(200)X
PIN 11242.00
Bid Amendment No. 1

Dear Sir/Ms.:

Please make the following change to your bid documents:

Add the attached two plan sheets to the Bid Book (electronic version only).

Consider this change prior to submitting your bid on December 1, 2004.

Sincerely,

Scott Bickford
Contracts & Specifications Engineer

PRINTED ON RECYCLED PAPER

THE MAINE DEPARTMENT OF TRANSPORTATION IS AN AFFIRMATIVE ACTION - EQUAL OPPORTUNITY EMPLOYER

STATE OF MAINE
DEPARTMENT OF TRANSPORTATION

REST AREA SANITATION

STATE WIDE
STP – 1124(200)X
PSN 2201

ALUM OR AL ALUMINUM

BIT	BITUMINOUS
BM	BENCH MARK
BOT	BOTTOM
BRG	BEARING
CL	CENTER LINE
CLG	CEILING
CONC	CONCRETE
CONT	CONTINUOUS
CONST	CONSTRUCTION
CONTR	CONTRACTOR
DBL	DOUBLE
DC	DOOR CLOSER
DIA	DIAMETER
DIM	DIMENSION
DNA	DOES NOT APPLY
DR	DOOR
DTL	DETAIL
DWG	DRAWING
E	EAST
EA	EACH
EF	EACH FACE
EJ	EXPANSION JOINT
EL	ELEVATION
ELEC	ELECTRICAL
EQ	EQUAL
EW	EACH WAY
EXIST OR (E)	EXISTING
EXT	EXTERIOR
FCS	FLOOR COATING SYSTEM
FD	FLOOR DRAIN
FDN	FOUNDATION
FFE	FINISH FLOOR ELEVATION
FIN	FINISH
FIN. FLR.	FINISH FLOOR
FIN GR	FINISH GRADE
FL	FLOOR
FRMG	FRAMING
FRP	FIBERGLASS REIN. PLASTIC
FT	FEET (FOOT)
FV	FIELD VERIFY
GA	GUAGE
GB	GRAB BARS
GL	GLASS
HC	HANDICAP
HDR	HEADER
HORZ	HORIZONTAL
HT	HEIGHT
IN	INCHES
INSUL	INSULATION
INT	INTERIOR
MIN	MINIMUM
MISC	MISCELLANEOUS
MTL	METAL
N	NORTH
NA	NOT APPLICABLE
NIC	NOT IN CONTRACT
NTS	NOT TO SCALE
OC	ON CENTER
OD	OUTSIDE DIAMETER
OF	OUTSIDE FACE
OPNG	OPENING
OPP	OPPOSITE
P	PAINT
PTD	PAINTED
PL	PLATE
PLY	PLYWOOD
PNL	PANEL
PT	PRESSURE TREATED
PT & D	PAPER TOWEL AND WASTE DISPENSER
RE	REFER
REINF	REINFORCED
REQD	REQUIRED
RO	ROUGH OPENING
S	SOUTH
SD	SOAP DISPENSER
SCHED	SCHEDULE
SECT	SECTION
SHT	SHEET
SIM	SIMILAR
SPEC	SPECIFICATIONS
SQ	SQUARE
STD	STANDARD
STL	STEEL
STRUC	STRUCTURAL
THK	THICKNESS
TP	TOILET PAPER DISPENSER
TYP	TYPICAL
VERT	VERTICAL
W	WEST
W/	WITH
WD	WOOD

C1 ABBREVIATIONS

NO SCALE

1. ALL WORK SHALL CONFORM TO LOCAL AND STATE LAWS, ORDINANCES AND PREVAILING EDITIONS OF ADOPTED BUILDING CODES.

2. CONTRACTOR SHALL REVIEW AND VERIFY ALL EXISTING CONDITIONS PRIOR TO STARTING THE WORK AT ANY SITE.

3. WORK WITH GIVEN DIMENSIONS AND LARGE SCALE DETAILS. DO NOT SCALE THE DRAWINGS AS THE REPRODUCTIVE PROCESS TENDS TO DISTORT THE ACCURACY OF THE GRAPHIC SCALE INDICATED.

4. INSTALL SOLID BLOCKING AT WALL FRAMING BEHIND ALL SURFACE MOUNTED FIXTURES, TRIM AND HANDRAILS.

5. ROOF SHEATHING: ⅝" PLYWOOD, EXPOSURE 1, 24/16. 8d NAILS @ 6" O.C. ON PANEL EDGES, 12" O.C. ON INTERMEDIATE MEMBERS.

6. WALL SHEATHING: ½" PLYWOOD, EXPOSURE 1, 8d NAILS @ 6" O.C. ON PANEL EDGES, 12" O.C. ON INTERMEDIATE MEMBERS.

7. INSTALL ½" ANCHOR BOLTS @ 4'-0" O.C. AND WITH 4" MIN. EMBEDMENT.

8. FOUNDATION/SLAB SHALL BE CONSTRUCTED IN ACCORDANCE WITH CONCRETE SPECIFICATIONS.

A1 GENERAL NOTES

NO SCALE

WOOD BLOCKING
PLYWOOD
GYPSUM BOARD
BATT INSULATION
RIGID INSULATION
CONCRETE
GRAVEL
SOIL
WOOD FRAMING

E5 ARCHITECTURAL MATERIALS

NO SCALE

COLOR SCHEDULE CODE
BUILDING SECTION
WALL SECTION
DETAIL SECTION
CASEWORK ELEVATION/ INTERIOR ELEVATION
VERTICAL ELEVATION
PARTITION TYPE
STRUCTURAL CENTERLINE
EXTERIOR ELEVATION

B5 ARCHITECTURAL SYMBOLS

NO SCALE

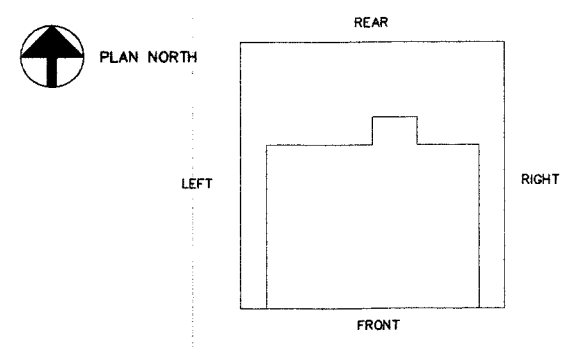

A5 ARCHITECTURAL KEY PLAN

NO SCALE

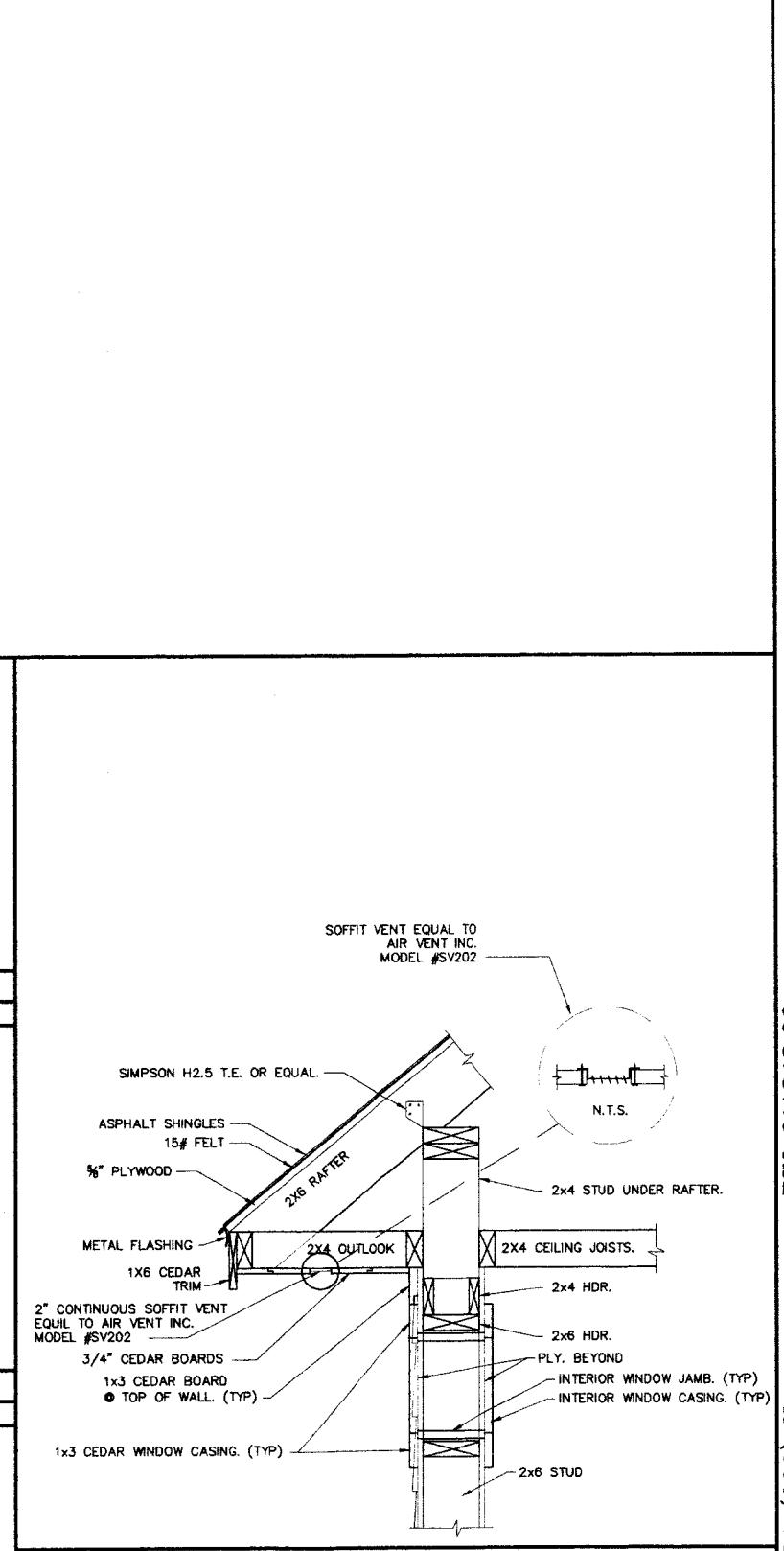

A7 SECTION @ WINDOWS (TYP)

1-1/2" = 1'-0" EAVES SIMILAR

allied *engineering, inc.*
FULL SERVICE CONSULTING ENGINEERS
STRUCTURAL • MECHANICAL • ELECTRICAL • TECHNOLOGY
ENVIRONMENTAL SERVICES • CONSTRUCTION ADMINISTRATION
One Westbrook Common, Westbrook, Maine 04092-2904
Telephone No: 207-854-8126 • Fax No: 207-854-0803
E-Mail: info@allied-eng.com • www.allied-eng.com

STATE OF MAINE
DEPARTMENT OF TRANSPORTATION
APPROVED
COMMISSIONER: DATE 10/27/04
CHIEF ENGINEER: DATE 10/27/04

STATE OF MAINE WILLIAM FAUCHER #7133 PROFESSIONAL ENGINEER

SIGNATURE
P.E. NUMBER
ISSUE DATE

PROJECT INFORMATION
PROGRAM
PROJECT MANAGER WFF
DESIGNER WFF
CONSULTANT ALLIED ENGINEERING
PROJECT RESIDENT
CONTRACTOR
PROJECT COMPLETION DATE

PIN 011242.00

STP-1124 (200) X

REST AREA SANITATION
STATE WIDE

GENERAL NOTES, CODE ANALYSIS
SYMBOLS AND ABBREVIATIONS

COPYRIGHT 2004 ALLIED ENGINEERING, INC.

SHEET NUMBER
1

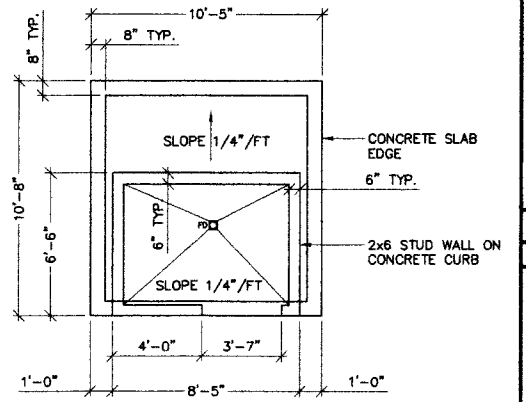

F1	SLAB FOUNDATION PLAN
1/4" = 1'-0"	

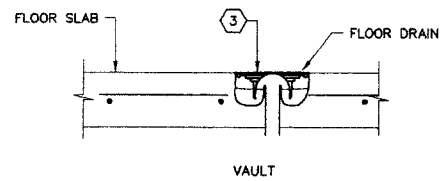

G3	FLOOR DRAIN DETAIL
N.T.S.	

1. REFER TO DIVISION 2 SPECIFICATIONS
2. DRILL HOLE IN TOP OF VAULT FOR URINAL WASTE LINE.
3. DRILL HOLE IN TOP OF VAULT FOR FLOOR DRAIN CONNECTION

F3	KEY NOTES
~	

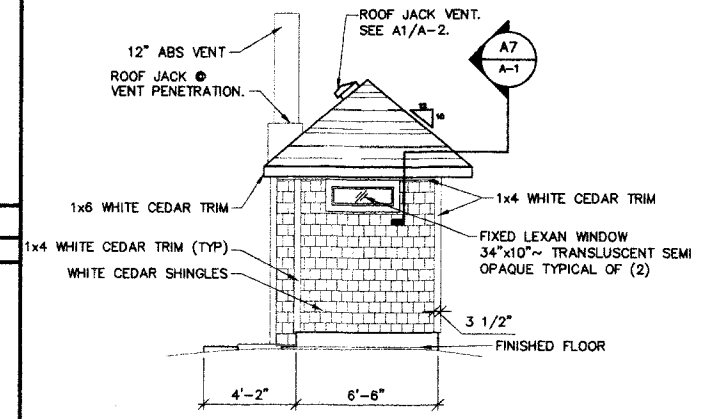

F5	END ELEVATION (TYPICAL)
1/4" = 1'-0"	

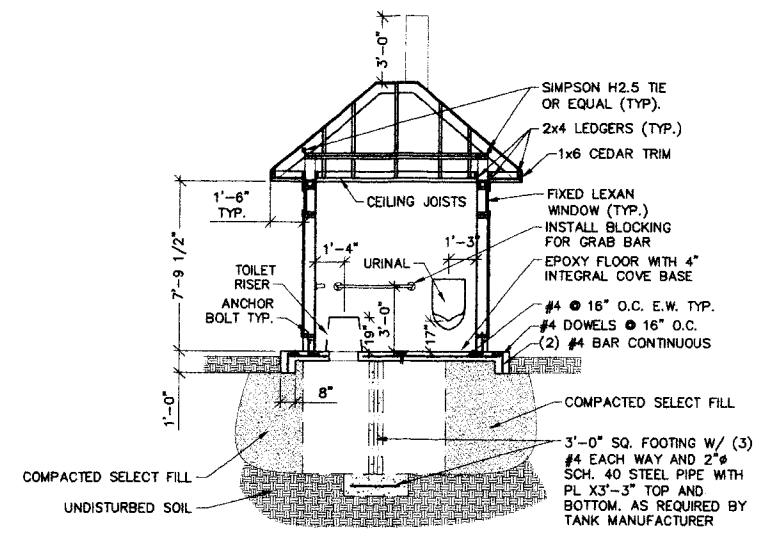

NOTE: SLAB SHALL BEAR EITHER ON COMPACTED FILL OR ON BEDROCK

E7	BUILDING SECTION
1/4" = 1'-0"	

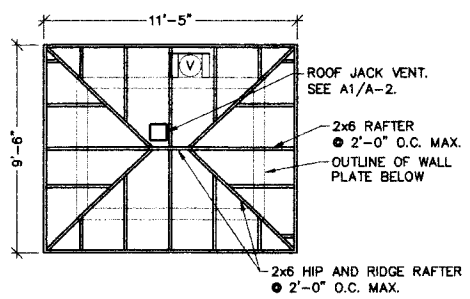

D1	ROOF PLAN
1/4" = 1'-0"	

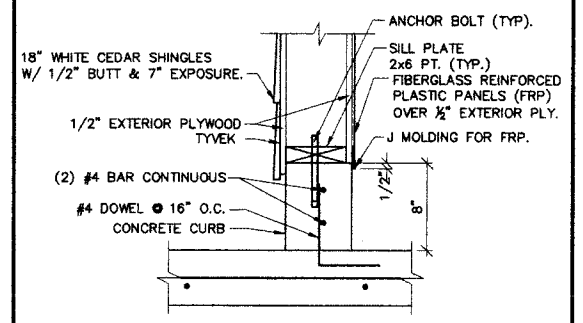

D3	WALL SECTION (TYPICAL)
1 1/2" = 1'-0"	

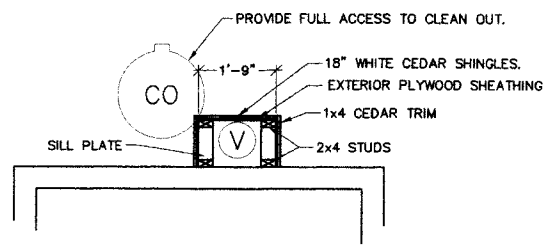

NOTE: ADJUST FRAMING FOR VENT ENCLOSURE AS REQUIRED.

D5	VENT ENCLOSURE PLAN
1/2" = 1'-0"	

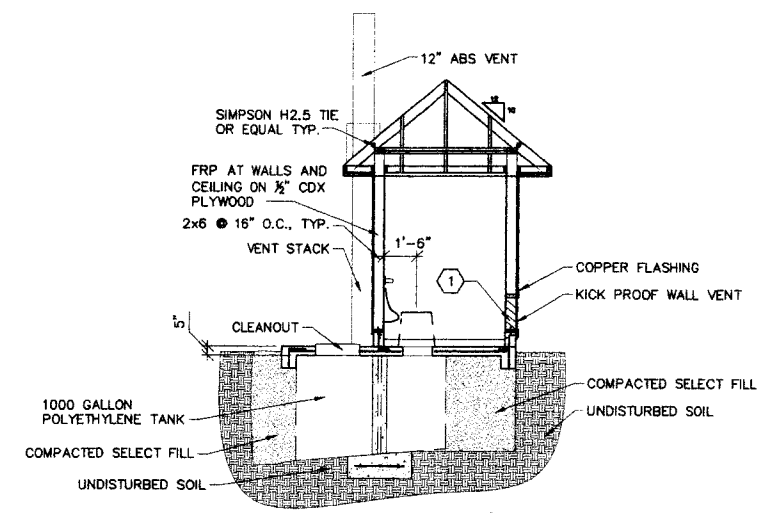

NOTE: VENT ENCLOSURE NOT SHOWN FOR CLARITY.

C7	BUILDING SECTION
1/4" = 1'-0"	

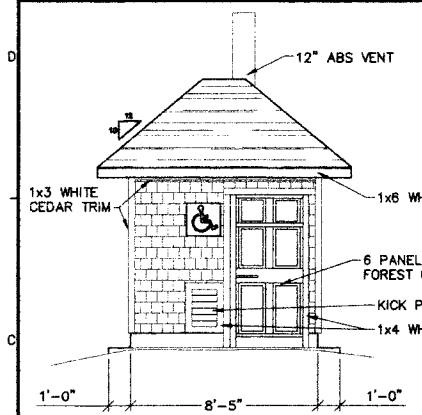

C1	FRONT ELEVATION
1/4" = 1'-0"	

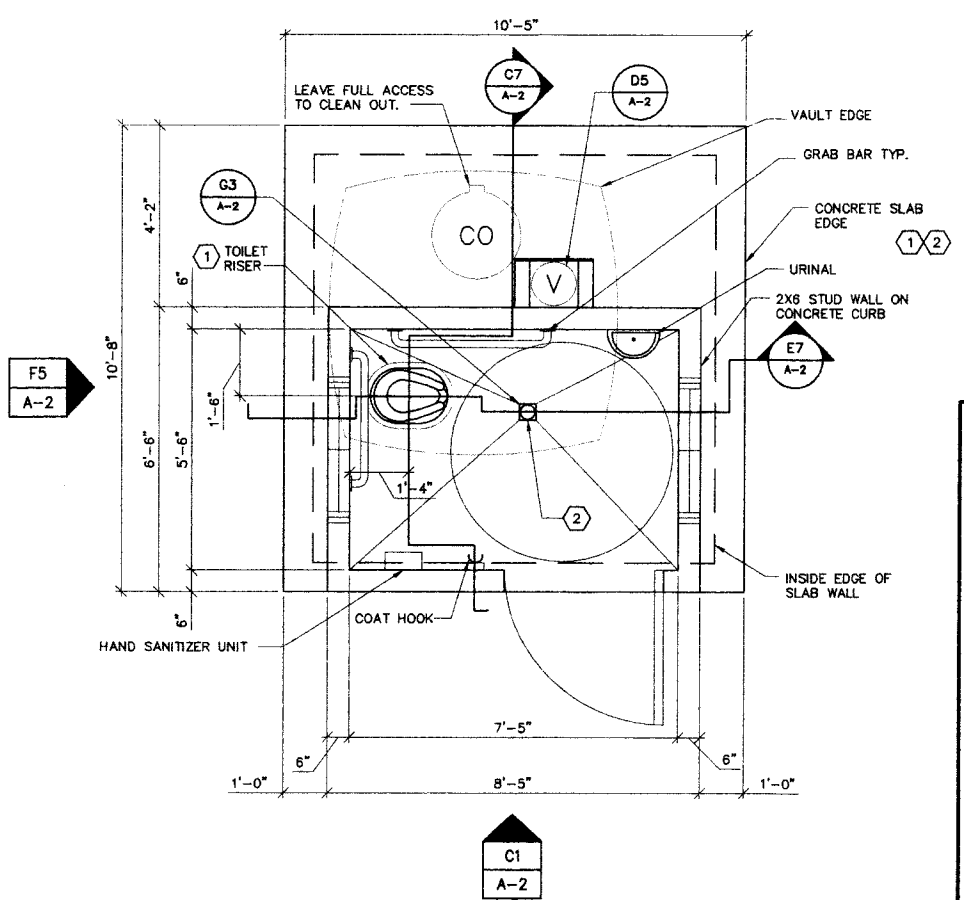

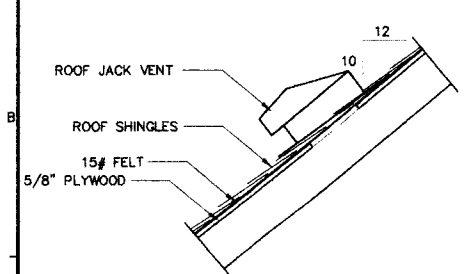

NOTE:

ROOF JACK VENT SHALL BE EQUAL TO COOK MODEL RJ 200

PROVIDE INTEGRAL FLASHING AND INSECT SCREEN.

DELETE BACKDRAFT DAMPERS.

A1	ROOF JACK VENT
1" = 1'-0"	

A3	FLOOR PLAN
1/2" = 1'-0"	

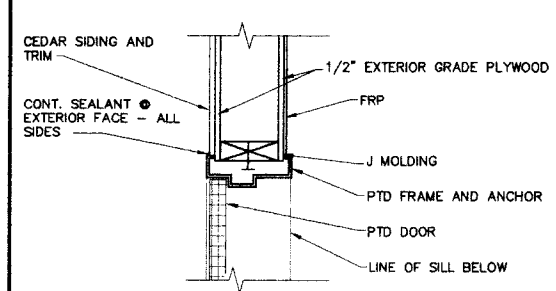

A7	DOOR JAMB
NO SCALE	

allied engineering, inc.
FULL SERVICE CONSULTING ENGINEERS
STRUCTURAL • MECHANICAL • ELECTRICAL • TECHNOLOGY
ENVIRONMENTAL SERVICES • CONSTRUCTION ADMINISTRATION
One Westbrook Common, Westbrook, Maine 04092-3904
Telephone No: 207-854-8126 • Fax No: 207-854-0803
E-Mail: info@allied-eng.com • www.allied-eng.com

STATE OF MAINE
DEPARTMENT OF TRANSPORTATION

APPROVED	DATE
COMMISSIONER:	
CHIEF ENGINEER:	

STATE OF MAINE · WILLIAM A. PACHER · #7153 · PROFESSIONAL ENGINEER

	SIGNATURE
	P.E. NUMBER
	ISSUE DATE

PROJECT INFORMATION	
PROGRAM	
PROJECT MANAGER	WPP
DESIGNER	WPP
CONSULTANT	ALLIED ENGINEERING
PROJECT RESIDENT	
CONTRACTOR	
PROJECT COMPLETION DATE	

PIN 011242.00

STP-1124 (200) X

REST AREA SANITATION STATE WIDE

FLOOR PLAN, SECTION, ELEVATIONS AND DETAILS

© Copyright 2004 Allied Engineering, Inc.

SHEET NUMBER
2

2 OF 2

Filename: D4022A.DWG
Date: 08-12-2004
Division: HIGHWAY
Username: DRH