MAINE

MOTOR VEHICLE

INSPECTION MANUAL

MAINE STATE POLICE
TRAFFIC SAFETY UNIT
20 STATE HOUSE STATION
TELEPHONE 624-8939

REVISED 07-20-12

MAINE DEPARTMENT OF PUBLIC SAFETY
MAINE STATE POLICE

CHAPTER ONE - MAINE MOTOR VEHICLE INSPECTION RULE

EXECUTIVE SUMMARY

The Motor Vehicle Inspection Program has been in existence for over 65 years. The primary goal of this safety program is the regulation and enforcement of the state's 2,600 inspection stations and over 8,000 licensed inspection technicians. The Maine Motor Vehicle Inspection Manual includes the formal rules governing many facets of the program, as well as reference guides and other documents that may be helpful for the automotive professional. These rules include the application process for licensure, the responsibilities of inspection technicians and stations, and the safety inspection standards and criteria for the inspection of a motor vehicle, motorcycle, commercial vehicle, school bus, or trailer.

Prior to this effort, the last revision of the rules was in 2006. Since that revision, automotive technology and the industry have seen considerable change and growth. Representatives from the industry and our personnel have noted numerous inconsistencies, omissions, obsolete material, and required additions or clarifications within the current manual. Several legislative actions and subsequent statute changes needed to be reflected in rule.

The current rules are a product of a project that began in early 2012. Once the clear need for amended rules was identified, the Maine State Police Motor Vehicle Inspection Unit spent countless hours modifying the manual to reflect our dedication to safety related inspection items and did away with rules that lacked a true safety nexus. . Resources utilized for this work include; Federal Motor Vehicle Safety Standards, Federal Motor Carrier Safety Regulations, applicable Maine statute, National School Bus Standards, National Highway Traffic Safety Administration studies, American Association of Motor Vehicle Administrators (AAMVA) studies and Model Policy On Periodic Safety Inspections.

The final rule, as adopted represents the product of this process and the input from people from a wide variety of groups with interest and expertise in the areas of automotive technology, safety, and law enforcement. The overall spirit and intent of these proposed rules is to update and clarify terminology, simplify language, clarify program practices and policies wherever possible, and to reflect current industry norms and practices. It was also our intent to minimize any fiscal impact to current licensees, and to be cognizant of the realities faced by many smaller businesses. It is with this realization that we have endeavored to 'grandfather' existing licensees where possible, and to use an incremental approach to making change within the industry.

Although a *complete review of the rule is recommended* for thorough understanding, the following represents a summary of the changes in rule:

- ✓ Updates language and terminology throughout the manual.
- ✓ Definition of a parking brake modified for three wheeled vehicles to include the use of a lever or foot pedal lock to hold pressure on the primary braking system.
- ✓ Clarify licensees are responsible for the actions of their employees, including but not limited to, substandard inspections.
- ✓ Licensed facilities must display their hourly rate. Commercial stations must display their billing increments. For example 15 minutes, 30 minutes or one hour minimum.
- ✓ Public stations must be open for at least 16 hours per week
- ✓ Fleet stations must have 10 vehicles registered to the company or the owner. Proof may be required.
- ✓ Order forms are no longer required to be under lock and key.
- ✓ The ban on tar paper as a construction material removed.
- ✓ The ban on unrelated items in the station removed.
- ✓ Requirement that stations be heated is removed.
- ✓ The requirement that stations have at least 400 sq. feet of workable space has been removed.
- ✓ Headlight aiming machine no longer required for Inspection Stations. A technician may use their education, training and experience to determine if the headlights are aimed properly.
- ✓ Clarify that only A and E stations are required to have a lift.
- ✓ A gas cap pressure tester for Cumberland County is required only as long as statute requires it.
- ✓ The electronic equivalent is acceptable for the requirement of any manual or reference material.
- ✓ School Bus Stations are no longer required to have a copy of the Uniform School Bus Standards.
- ✓ Stations are no longer required to have portable lights.
- ✓ Class D stations can now elect to only inspect trailers. Historically they had to be engaged in the sale of trailers to elect this option.
- ✓ All Class A vehicles, regardless of use must pass a Class A Inspection. If the vehicle is10,001 or more pounds and engaged in commerce then the vehicle must also pass a Class D inspection.
- ✓ Trailers and semi-trailers that are required to be inspected must undergo a commercial (Class D) inspection. This may be done at a Class A station if the trailer is not equipped with air brakes.
- ✓ Technicians are no longer required to check the headlight aim specifications for the vehicle being inspected.

- ✓ Fuel restrictor pipe does not need to be inspected any more.
- ✓ Inspections stickers may now be mailed to an address other than the Inspection Station's business address, when approved by the Unit.
- ✓ Motorcycle Inspection Stickers shall be affixed to the registration plate. Optional until March 1, 2013.All stations must photocopy their sticker stubs before sending them into the state and must keep a copy at their place of business for 2 years. Exceptions can be made for an approved in-house tracking system by contacting this Unit.
- ✓ Station licenses shall be good for two years from the date of issuance.
- ✓ Hearings will be held before the Chief of the Maine State Police or by his or her designee.
- ✓ Clarify that all vehicles must have met the Federal Motor Vehicle Safety Standards, EPA Pollutant requirements and NHTSA crash testing at the time of manufacture to pass a Maine inspection. Unless the vehicle is otherwise exempted by law.

CLASS A CHANGES

- ✓ Gear selector indicator no longer required to function.
- ✓ Any malfunction indicator light required to be inspected must illuminate properly.
- ✓ An ABS light that remains on is a cause for rejection.
- ✓ Allow for no pedal reserve on parking brakes that are designed that way from the manufacturer.
- ✓ Brake linings can't be seen during a visual inspection, therefore the requirement that the brake lining must make proper contact with the drum is removed.
- ✓ The requirement to check and see if the brake fluid is contaminated has been removed.
- ✓ Brake safety tubing may be joined with any SAE or DOT approved fittings now.
- ✓ New rejection for vehicles that have brake pads that are binding or if the slides are frozen.
- ✓ Allow the rear door latches of cruisers to be disabled.
- ✓ Door handles can be removed to create a smooth appearance as long as there is a mechanical method of opening the door from the inside.
- ✓ Clarify that if the hood latch fails to operate properly, the vehicle shall only be rejected if the hood is not secured or in danger of opening during operation.
- ✓ Remove "Reject vehicle if any seat has springs or protruding parts."
- ✓ Allow mail carrier vehicles and authorized emergency vehicles to have air bags disabled if in the opinion of the technician the alteration is necessary. Authorized Emergency Vehicles are defined by Title 29-A 2054.
- ✓ Remove "Reject vehicle if any covering or discoloration affects the original color or reduces the visibility of the registration plate."

- ✓ Allow for adequate repairs and patches to exhaust systems.
- ✓ Allow flex pipe in exhaust systems.
- ✓ Catalytic converters are required on 1982 and newer models. All vehicles originally equipped with a converter, must have one regardless of its age.
- ✓ Technicians are now allowed to use their discretion to determine if a windshield's defects, cracks (6 inches or less) or cloudiness obstructs the operator's view of the roadway. Rejection is not mandatory if the technician feels the defect isn't a vision obstruction.
- ✓ Clarify that windows behind the B-post can have unlimited tint.
- ✓ Windshield wipers no longer need to be of the original size.
- ✓ Only windshield wipers must function. Rear window and headlight wipers are no longer required to function.
- ✓ Windshield washing systems are no longer required to function.
- ✓ Dump trucks, ambulances, cube vans and other similar vehicles with a rear obstruction are no longer required to have an inside rearview mirror.
- ✓ Technicians can now use their education, training and experience to determine if a mirror defect obstructs the operators view of the road.
- ✓ Vehicles are no longer required to have sun-visors, however if a visor is present it must be able to stay in the upright fixed position.
- ✓ Only required lighting is now subject to inspections. Auxiliary lights that are not prohibited by law or regulation that are added to a vehicle or installed as optional equipment by the manufacturer are not required to function.
- ✓ Lamps and lenses are now allowed to be properly repaired. Moisture inside lens is no longer a cause for rejection. Properly repaired is defined in the manual.
- ✓ Discoloration, contamination or reflector deterioration is permissible as long as it doesn't reduce the lighting below safe operating conditions.
- ✓ Clear lenses on signals and brakes are now legal.
- ✓ Damaged wiring, poor electrical connections and switches are now at the discretion of the inspecting technician.
- ✓ Self cancelling mechanism on signals is no longer required to function.
- ✓ Brake lights can now pulsate.
- ✓ Refer to manufacturer's specifications for all tolerances.
- ✓ A torn C.V. boot, rack and pinion boot, or ball joint boot is no longer a cause for rejection.
- ✓ Clarify that seepage does not equal leakage of fluids.
- ✓ Add that any steering, alignment or suspension component can be failed for rust if failure of the component is imminent.

- ✓ Tires can now be plugged and still pass an inspection. If in the opinion of the inspecting technician the repair is adequate.
- ✓ Tire size removed from manual. Must refer to Statute, Title 29-A 1917. (Same law as old rule)
- ✓ Documentation for ABS re-flash is no longer required.
- ✓ Clarify that custom vehicles must have tires that meet the requirements of Title 29-A 1917.
- ✓ Clarify that hoods are not required on Street Rods.

CLASS B CHANGES

- ✓ Clarify that a tailpipe can't exit below an emergency door.
- ✓ Any required mirror may be other reflective material, not just mirror glass.
- ✓ Allowable Alternative Vehicles are exempt from the stop arm requirement.
- ✓ If the crossing arm doesn't activate when the red lights come on and the service door opens, reject vehicle.
- ✓ Crossing arms are no longer required to be painted glossy school bus yellow.
- ✓ Change required length of crossing arm to be at least 60 inches, instead of 70 inches.
- ✓ DOE rule was replaced in several places by F.M.V.S.S.
- ✓ Reject vehicle if the protective padding across the inside top of the door opening is missing, not securely fastened or damaged.
- ✓ Tinted glass is now permissible on School Buses. No less than 28% light transmittance on side windows. No less than 50% light transmittance across the back windows. No tint allowed for windshields, driver's side windows and side doors.
- ✓ Compartment stanchions or support bolts must be installed to the standards set forth by the F.M.V.S.S. at the time of manufacture.
- ✓ Reject vehicle if there is no defrost heat/temp control.

CLASS C CHANGES

- ✓ A brake lever or pedal lock or other device that holds the brakes applied on a three wheeled vehicle shall be a sufficient parking brake.
- ✓ If a motorcycle was originally equipped with a speedometer then one must be present and functioning.
- ✓ "Reject vehicle if any wheel does not track properly or adversely affects the control of the motorcycle," has been removed.
- ✓ Factory smoked signals and clear lenses to the rear are now permissible.
- ✓ The brake light may pulsate, it must be red.

- ✓ The registration plate can be mounted to the side or rear of the fender as long as the plate is clearly visible to the rear.
- ✓ Technicians can use their discretion to determine if the reflective surface of a mirror is degraded to the point at which visibility is reduced.

CLASS D CHANGES

- ✓ Use manufacturer's specification for tolerances.
- ✓ Hydraulic lines and couplings can be repaired using DOT or SAE approved parts.
- ✓ Headlights are no longer required to be checked by a machine or chart. A technician may use their education, training and experience to determine if the headlight is properly aimed.
- ✓ Headlamps that are discolored, contaminated or that the reflector is deteriorated to the point that it causes a reduction in the effectiveness of the headlamp is a cause for rejection.
- ✓ Lenses may be properly repaired as defined in the manual.
- ✓ Self-cancelling mechanism for signals are no longer required to function.
- ✓ Pulsating brake lights are now permissible.
- ✓ Only switches required to be inspected need to be in good working order.
- ✓ Cloudiness allowance of windshields has been changed from 1 to 2 inches from the top, and from ½ inch to 1 inch from the divider strip on a split windshield.
- ✓ Chips and fractures in windshields can be up to ¾ of an inch provided it is more than 3 inches from similarly damaged areas.
- ✓ Rejection standard for cracks in windshields from 4 inches to 6 inches.
- ✓ Technicians can now use their discretion as it pertains to scratches to determine if the scratch or mar obstructs the driver's view of the road.
- ✓ Windshield wipers are no longer required to be original size.
- ✓ Trailers can have pulsating brake lights.

MAINE MOTOR VEHICLE INSPECTION MANUAL

TABLE OF CONTENTS

Chapter 1 - Maine Motor Vehicle Inspection Rules.....100-1

Appendix

App. 1 – Fees…….....….....…...….Supplemental Information 1

App. 2 – Inspection Sticker and Stub Sheet Information…….….....Supplemental Information 2

App. 3 – Recommended Rejection Form.....…Supplemental Information 3

App. 4 – Class Registration Codes…….....Supplemental Information 4

App. 5 – Partial Inspections……...……....Supplemental Information 5

App. 6 – Vehicles Registered In a Foreign State……...Supplemental Information 5

App. 7 – Tire Diameter Formula……Supplemental Information 6

App. 8 – Headlamp Aiming Information……...Supplemental Information 7

App. 9 – School Bus Recommended Out-of-Service Criteria……...Supplemental Information 8

App. 10 – MRSA Title 29-A, Chapter 15, Inspection and Repair*…..Supplemental Information 9

App. 11 – MRSA Title 29-A, Chapter 17, Equipment*……...Supplemental Information 10

App. 12 – MRSA Title 29-A, §2054,
Emergency and Auxiliary Lights; Sirens; Privileges*…….Supplemental Information 11

App. 13 – Index……Supplemental Information 12

*Updated MRSA Title 29-A statutes may be found online at:
http://janus.state.me.us/legis/statutes/

16 DEPARTMENT OF PUBLIC SAFETY

222 BUREAU OF STATE POLICE

Sections 100 – 200 MOTOR VEHICLE INSPECTION RULES

SUMMARY: The mission of the Motor Vehicle Inspection Program is to improve highway safety by establishing inspection standards for motor vehicles required by statute to be inspected annually. This chapter establishes the standards for inspection of vehicles by class, as well as the standards for the various types of licenses and the administration of the program in general.

TABLE OF CONTENTS

SECTION SUBJECT ..... PAGE

100 DEFINITIONS 100-1

110 RESPONSIBILITIES OF INSPECTION STATION LICENSEES 110-1

115 LICENSE TYPES AND SEQUENCE OF INSPECTION 115-1

120 RESPONSIBILITIES OF INSPECTION TECHNICIAN LICENSEES 120-1

130 STICKER REPLACEMENT STATIONS, WINDOW TINT STATIONS AND AGENTS 130-1

140 CERTIFICATES OF INSPECTION “INSPECTION STICKERS” 140-1

150 STANDARDS AND PROCEDURES FOR LICENSURE 150-1

160 RENEWAL, SUSPENSION & REVOCATION OF LICENSE 160-1

170 CLASSES “A” & “E” MOTOR VEHICLE INSPECTION STANDARDS & PROCEDURES 170-1

180 CLASS “B” SCHOOL BUS INSPECTION STANDARDS & PROCEDURES 180-1

190 CLASS “C” MOTORCYCLE INSPECTION STANDARDS & PROCEDURES 190-1

200 CLASS “D” COMMERCIAL VEHICLE INSPECTION STANDARDS & PROCEDURES 200-1

APPENDICES

16 DEPARTMENT OF PUBLIC SAFETY

222 BUREAU OF STATE POLICE

SECTION 100: DEFINITIONS AND LICENSE TYPES

SUMMARY: Generally, unless the context clearly indicates otherwise, undefined terms used in this Chapter have the same meaning as in Title 29-A MRSA. As used in this Chapter, unless the context clearly indicates otherwise, the terms below have the following meanings.

100.01 DEFINITIONS

1. **AAV** means an allowable alternative vehicle as defined in Title 29-A MRSA §2301.
2. **AGENT** means the owner or representative of a Sticker Replacement Station or Window Tint Station who is licensed according to this Chapter.
3. **AUTOCYCLE** means an enclosed motorcycle, originally manufactured as an autocycle. It is designed to have no more than three wheels in contact with the ground at any time.
4. **BUMPER PROTECTION SYSTEM** means the protective design feature(s) of a vehicle, namely the bumper or sheet metal or similar material and any structural materials designed to lessen the damage from any frontal or rear impact.
5. **CASTOR ANGLE** means the acute angle measured in the longitudinal plane of symmetry between the fork assembly axis or kingpin axis and the vertical plane of a motorcycle.
6. **CENTER STAND** means a center stand and/or side stand that is a retractable parking device designed to provide support for an unattended motorcycle. A motorcycle may be equipped with a center stand, a side stand or both.
7. **CRITICAL VISION AREA** means that area of the windshield covered by the normal sweep of all except the lower 4 inches of properly adjusted wiper blades, utilizing factory installed blades or equivalent replacements.
8. **DEFECT** means a mechanical condition or problem that constitutes a violation of Maine law or this Chapter.
9. **ENHANCED INSPECTION** means the testing of additional vehicle components. Depending on the year of manufacture, a vehicle may be subjected to tests, including a gas cap pressure test, an On-Board Diagnostic test, or both. An enhanced inspection is required of a motor vehicle that is required to be registered in Cumberland County. This inspection is described in Title 29-A §1751 (2-A), and is referred to as a Class E inspection within the context of this Chapter.

10. **FLEET INSPECTION STATION** means a non-public inspection station licensed to perform inspections on a minimum of 10 vehicles registered to the Fleet Station owner or under contract to conduct inspections on a fleet of 10 or more vehicles for exclusive maintenance. A fleet inspection station may also be licensed as a public inspection station.

11. **FLOOR PAN** means the bottom floor component of the passenger compartment extending from the firewall to and including the trunk compartment.

12. **GROSS VEHICLE WEIGHT RATING** means the weight rating designated by the original manufacturer of the vehicle. This rating may be marked on the vehicle, located in a published specification guide, or obtained from the manufacturer.

13. **INSPECTION STATION** means a business entity currently licensed by the Maine State Police to perform inspections. An inspection station may be licensed to perform more than one class of inspection. An inspection station must have an on-site manager and/or the owner who is the licensee of the station.

14. **INSPECTION STICKER** has the same meaning as a certificate of inspection.

15. **INSPECTION TECHNICIAN** means a person currently licensed by the Maine State Police to perform inspections. An Inspection Technician may be licensed to perform more than one class of inspection.

16. **LICENSEE** means the owner of a business or a Technician licensed pursuant to statute and this Chapter.

17. **OEM** means equipment installed or originally offered as equipment by the original vehicle manufacturer.

18. **ON-SITE MANAGER** means the person who is responsible for the daily activities of the licensed business premises, and the performance of the licensed Inspection Technicians.

19. **ORIGINAL EQUIPMENT** means any item of motor vehicle equipment, including tires, installed in or on a motor vehicle or available by option for the particular vehicle from the original manufacturer at the time of its delivery to the first purchaser.

20. **OUT OF SERVICE** means the removal of a vehicle from regular service due to a defective condition that is determined to be serious. This determination shall be based on standards contained within this Chapter and upon published 'Out Of Service Criteria and Inspection Methods' as set forth in the "National School Transportation Specifications and Procedures May 2005 Edition.

21. **PARKING BRAKE SYSTEM;**

    A. For motor vehicles, a "Parking Brake System" is a brake system used to hold and maintain a vehicle in a stationary position. (A positive mechanical means is employed to hold the brake applied when the vehicle is unattended) A "micro-lock" is not considered to be an adequate parking brake.

B. For 3-wheeled vehicles and auto cycles, a "Parking Brake System" is a brake system used to hold and maintain a vehicle in a stationary position. A positive mechanical means is employed to hold the brake applied, or hold the lever or foot pedal applied, when the vehicle is unattended. A motorcycle with a sidecar attached is not considered a 3-wheel vehicle.

21. PASSENGER COMPARTMENT means the enclosed interior area of a vehicle that is designed or used for the seating or carrying of the driver and/or passengers and is separated from the engine and trunk compartments.

22. PEDAL RESERVE means the amount of total pedal travel left in reserve when the pedal is depressed to the brake-applied position in a hydraulic, mechanical, or power assisted hydraulic brake system.

23. RAKE ANGLE (SEE **CASTOR ANGLE).**

24. REJECT VEHICLE means to fail to approve a vehicle for inspection or refuse to issue an inspection sticker.

25. SCRUB LINE means the horizontal plane measured between the bottom edge of the four tire rims.

26. SERVICE BRAKE SYSTEM

A. Motor Vehicles: A brake system used for retarding, stopping and controlling the vehicle under normal operating conditions.

B. Motorcycle: A split brake system or two independently actuated brake systems, which is the primary system for retarding, stopping and controlling the vehicle.

27. SPECIALLY CONSTRUCTED MOTORCYCLE means a vehicle assembled from new or used parts by other than a recognized manufacturer of motorcycles; or a vehicle that is modified to the extent that the original identity of make, model or type is obscured by material changes in appearance; or is modified by the removal, addition, alteration or substitution of parts other than original replacement essential parts.

28. STEERING LINKAGE means the system composed of the steering wheel and shaft, rack and pinion, steering box, pitman arm, idler-arm, center link, tie rods and steering knuckle.

29. STICKER REPLACEMENT AGENT means a person employed by a Sticker Replacement Station and designated by the station to replace inspection stickers.

30. STICKER REPLACEMENT STATION means a business engaged in automotive glass replacement as the primary source of income. Sticker Replacement Stations may be licensed by the Maine State Police to replace an inspection sticker on a vehicle.

31. STUB SHEET means the portion of an inspection sticker designed to be completed by the issuing Technician and returned to the Maine State Police Inspection Unit office.

32. **SUSPENSION SYSTEM** means the system composed of the solid, tandem or I-beam axles, upper and lower control arms, ball joints or kingpins, leaf, coil, air or torsion bar springs, spring hangers and shackles, U-bolts, radius arms, caster struts, trailing arms, equalizer beam assemblies, beam assemblies, torque rods, stabilizer bars, tracking bars and all related bushings, shock absorbers, washers and attaching components including the frame and cross members.

33. **TRAIL** means the horizontal distance from the point where the steer axis of a motorcycle intersects with the roadway and the tire contact point.

34. **TRUNK COMPARTMENT** means an enclosed area separated from the passenger compartment by a solid barrier and not designed or used for the conveyance of passengers.

35. **WINDOW TINT STATION** means a business engaged in automotive glass treatment or tinting. Window Tint Stations may be licensed by the Maine State Police to issue window tint certificates pursuant to statute.

16 DEPARTMENT OF PUBLIC SAFETY

222 BUREAU OF STATE POLICE

SECTION 110: RESPONSIBILITIES OF INSPECTION STATION LICENSEES

SUMMARY: This section describes the responsibilities and requirements of an Inspection Station Licensee.

110.01 GENERAL RESPONSIBILITIES OF INSPECTION STATION LICENSEE

1. The owner (licensee) and on-site manager of an inspection station must comply with Maine statutes and rules concerning motor vehicle inspections.

2. The licensee shall be responsible for maintaining in good condition all equipment and supplies issued by the Maine State Police.

3. The licensee shall be familiar with and responsible for the daily operations of the licensed station and the actions of its employees including, but not limited to, substandard inspections

4. During normal business hours the licensee shall have available for inspection by an employee of the Maine State Police all materials concerning inspections that are required or issued.

5. The licensee shall conspicuously display, so as to be visible from the most heavily traveled public roadway adjacent to the business, an official inspection station sign furnished by the Maine State Police. Stations licensed to perform fleet inspections shall not display the sign unless also licensed to perform public inspections. Fees for inspection station signs shall be determined by the Motor Vehicle Inspection Unit.

6. The licensee shall display the inspection station license, all Technicians' licenses, the inspection procedure chart and their hourly rate in an area to which the public has access during the time of the inspection. Commercial Stations shall also post in what time increments commercial inspections will be billed at (I.E. if the fee for the inspection is billed a minimum hour, etc.)

7. Inspection station licenses are not transferable.

8. Inspection stations must be open at least 16 hours per week and shall post their business hours in a manner visible to the public. Fleet only stations are exempt from this requirement.

110.02 FLEET STATIONS

1. An inspection station may be designated a fleet station if there are at least 10 vehicles registered in the name of the fleet inspection station's owner, or the business name.

2. A fleet inspection station may be under contract by the owner of a fleet of vehicles for exclusive maintenance. Such contracts must be available for inspection by an employee of the Maine State Police.

3. Fleet inspections are limited exclusively to fleet vehicles.

4. Fleet stations must employ a sufficient number of certified inspection technicians to inspect every vehicle in the fleet annually.

5. Fleet stations are subject to the same rules and requirements as non-fleet inspection stations.

110.03 SECURITIES AND HANDLING OF INSPECTION STICKERS

1. Inspection Sticker Security

   A. A licensee shall ensure that all inspection stickers assigned to the station are secured under lock and key or by some other secure locking mechanism.

   B. Employee access to stickers must be limited to Inspection Technicians and those employees whose responsibilities include ordering, maintaining, or otherwise handling inspection stickers.

   C. Members of the public shall not have access to the inspection stickers or related materials. Inspection stickers shall not be accessible to non-employees entering the general area where inspection stickers are kept.

NOTE: The implementation of an in-house system to track and account for inspection stickers is strongly encouraged.

1. Inspection Sticker Handling

   A. Sheets of inspection stickers and stub sheets shall be kept intact, with individual stickers removed from the sheet in numerical order as needed.

   B. Inspection stickers shall not be shared, transferred, or sold between licensed inspection stations.

2. Theft or Loss

A. A licensee shall notify the Maine State Police Inspection Unit immediately upon the discovery of any loss or theft of inspection stickers. The licensee shall record and report information about the loss or theft as provided in this chapter. The licensee shall also report the theft to the appropriate law enforcement agency for further investigation.

110.04 INSPECTION TECHNICIANS EMPLOYED BY LICENSEE

1. The licensee shall ensure that the Inspection Technicians do not require unnecessary replacement parts and shall ensure that the inspection technicians do not assess excessive labor charges.

2. The licensee shall ensure that only certified Inspection Technicians actually inspect vehicles. The licensee shall ensure that Inspection Technicians inspect only the type(s) of vehicles that they are certified to inspect.

110.05 BUSINESS AND PREMISES - TOOLS

1. A licensee shall permit inspections only in the building described in the station license application. This restriction does not apply to fire apparatus, special mobile equipment, trailers, semi-trailers, converter dollies, out-of-doors inspections pursuant to applicable law, or off-highway use vehicles.

2. If a licensed inspection station moves to a new location, the owner must inform the Maine State Police Inspection Unit of this change by filing a new station application containing the new information. The new premises must be inspected before any inspection stickers can be issued from the new location.

3. If a licensed inspection station is sold or conveyed to a new owner, the inspection station license becomes void. The new owner must complete the application process and the station must be re-licensed as a new station. The old inspection station materials, including but not limited to; inspection stickers, license certificate and signs must be returned to the Maine State Police, unless prior arrangements have been made with the Motor Vehicle Inspection Unit.

NOTE: It is strongly recommended that the new owner submit the new station application at least 30 days prior to the actual change of ownership to avoid delays in the process.

4. If a licensed inspection station goes out of business, the inspection station license becomes void. Licensees going out of business must inform the Motor Vehicle Inspection Unit within three (3) business days of their last business day. The licensee must return all inspection materials to the Maine State Police within five (5) business days of the business's last business day. The date of receipt of the materials by the Motor Vehicle Inspection Unit shall be used to determine compliance with this requirement.

5. Inspection stations shall be reasonably free of debris and hazards and completely enclosed by floor to ceiling construction.

6. New inspection stations licensed on or after January 1, 2007 shall have an inspection/repair area with a concrete floor.

7. Every inspection station is required to have a sufficient number and type of tools necessary to conduct an inspection on any vehicle the station is licensed to inspect. Such tools are required to be on the premises at all times and include, at a minimum:

   A. A ball joint gauge, dial type, with frame attaching device;

   B. A brake drum micrometer or caliper capable of measuring the largest brake drum diameter of the vehicles inspected. The measuring device must be capable of measuring in increments of 0.001;

   C. Gauges suitable for measuring brake linings, pads and rotor thickness;

   D. A mechanism to safely lift and support vehicles;

      (1) Stations licensed prior to January 1, 2007 must have a lift, an inspection pit, or a sufficient number and type of jacks and stands to safely raise and/or examine all types of vehicles that the station is licensed to inspect.

      (2) Class A and E Stations licensed on or after January 01, 2007, must have a functioning vehicle lift or properly installed inspection pit.

   E. A tire tread depth gauge;

   F. A tire pressure gauge;

   G. A Class D station must have a 20 ton bottle jack;

   H. A Class E station must have a gas cap pressure tester that has been approved by the Commissioner of the Maine Department of Environmental Protection so long as statute requires the gas cap pressure test to be conducted;

   I. A Class E station must have an approved scan tool that is capable of reading monitor status and malfunction indicator light (MIL) status of the vehicle being inspected. An approved scan tool is

one that complies with the Society of Automotive Engineers (SAE) Recommended Practice J1978 and J1979, or has been approved by the Commissioner of the Maine Department of Environmental Protection.

NOTE: Questions related to emissions testing equipment and procedures may be directed to the Maine Department of Environmental Protection, Bureau of Air Quality.

8. Each inspection station is required to have a sufficient number and type of reference guides necessary, or their electronic equivalent, to conduct an inspection on any vehicle the station is licensed to inspect. Such manuals include, but are not limited to, the following:

   A. A tire guide listing standard and optional tire sizes current to within two (2) years;

   B. A specification guide current to within 2 years;

   C. Class A or E stations inspecting vehicles between 10,001 and 26,000 pounds and ALL Class D stations must have a copy of the Federal Motor Carrier Safety Regulations pertaining to equipment contained in 49 Code of Federal Regulations Part 393.

16 DEPARTMENT OF PUBLIC SAFETY

222 BUREAU OF STATE POLICE

SECTION 115: VEHICLE INSPECTION CLASSIFICATION, AND SEQUENCE OF INSPECTION

SUMMARY: This section describes the types and classifications of vehicle inspections. The section also describes the sequence of operations to be performed during the inspection of a vehicle.

115.01 VEHICLE INSPECTION CLASSIFICATIONS

1. An inspection station may be licensed to inspect more than one classification of vehicle.

2. All Class A and Class D inspection stations and technicians located in Cumberland County shall also be licensed as a Class E station or technician.

3. A licensed inspection station may issue a replacement sticker in conformance with the guidelines established in Section 130 of this rule.

4. An inspection technician may not inspect a vehicle or issue an inspection sticker to a vehicle that is not in the class of vehicles that the licensee and inspection technician is authorized to inspect.

5. Any licensed inspection station may become a Class E station.

6. Class A Inspection

   A. A Class A Inspection is an inspection of any motor vehicle required by statute to be inspected, and that has a gross vehicle weight rating of 10,000 lbs or less;

   B. A Class A Inspection Station may elect to inspect motor vehicles with a gross vehicle weight or gross vehicle weight rating of between 10,001 and 26,000 pounds, but is restricted to vehicles that are equipped with a braking system other than an air brake system. Vehicles inspected in accordance with this paragraph must be able to be physically accommodated inside the inspection facility, and the licensee must have sufficient means of safely lifting the vehicle for inspection.

C. A Class A Inspection Station may also inspect trailers or semi-trailers that are not equipped with air brakes.

7. Class B Inspection

A. A Class B Inspection is an inspection of a school bus.

B. School buses shall be inspected, and fees assessed pursuant to Maine law.

8. Class C Inspection

A Class C inspection is an inspection of a motorcycle.

9. Class D Inspection

A. A Class D station may elect to exclusively inspect trailers and semi-trailers.

B. All motor vehicles with a gross vehicle weight rating of 26,001 pounds or more, except school buses.

C. Motor vehicles with a gross vehicle weight or gross vehicle weight rating of between 10,001 and 26,000 pounds and engaged in commerce, except school buses. (Vehicles in this category, must meet all of the requirements of a Class A and D inspection), and Class E when applicable.

D. Vehicles used to transport hazardous materials in quantities required to be placarded.

E. Vehicles designed to transport more than 15 passengers.

F. Trailers or semi-trailers required to be commercially inspected.

10. Class E Inspection

A. A Class E Inspection is the enhanced inspection of a motor vehicle that is required to be registered in Cumberland County.

B. The age of a vehicle is determined by the year of the chassis.

C. Vehicles manufactured before 1974 are not subject to the enhanced inspection requirements. These vehicles, if registered or inspected in Cumberland County shall receive a Class E inspection sticker.

D. Gasoline powered vehicles manufactured during or after 1974 and registered in Cumberland County shall be subject to a gas cap pressure test. These vehicles shall receive a Class E sticker.

E. Vehicles manufactured during or after 1996 and registered in Cumberland County are subject to both the gas cap pressure test and the on-board diagnostic test. These vehicles shall receive a Class E sticker.

F. Vehicles not registered in Cumberland County may receive a Class E enhanced inspection and receive a Class E sticker. Vehicles not registered in Cumberland County must receive a Class E inspection if they are inspected at a station that is located in Cumberland County.

FEES: Fee information may be obtained online, consulting additionally provided guides or material, or by contacting the Maine State Police Inspection Unit.

115.03 SEQUENCE OF INSPECTION

1. Sequence of Inspection for Motor Vehicles

A. Verify the vehicle documentation.

B. Examine both registration plates. (May be inspected with transit, dealer or temporary plates. Out-of-state vehicles may have one or two plates).

C. Examine the vehicle registration. If the information as to the vehicle description is not accurate, do not inspect the vehicle. If the registration is not current or is not valid, do not inspect the vehicle.

D. Compare the vehicle identification number to that on the registration.

NOTE: If there is a mistake in the VIN on the registration, complete form MV-141 and mail to the Maine Bureau of Motor Vehicles.

E. Determine the gross vehicle weight rating of the vehicle and if the vehicle is engaged in commerce to establish the appropriate class of inspection required.

F. Determine if the vehicle is registered in Cumberland County to determine if a Class E inspection is required.

G. Check the sufficiency of the service and emergency brakes before beginning the inspection.

H. Proceed with the inspection appropriate for the class of vehicle.

I. If the vehicle passes inspection, the inspection technician shall legibly complete the sticker and stub sheet information as required in 140.03.

J. The Inspection Technician shall remove the old inspection sticker and affix the new sticker.

K. If the Inspection Technician fails the vehicle for inspection, the Technician shall cut the sticker diagonally and remove the portion of the sticker that does not display the month of expiration. The Technician shall supply the owner of the vehicle with a written list of the vehicle deficiencies.

115.10 Class A Inspection Sequence

The following items, at a minimum, shall be inspected as part of a Class A inspection;

1. Brakes
2. Windshield
3. Horn
4. Rearview Mirror
5. Window Glass
6. Seat Belts
7. Steering Mechanism
8. Suspension System
9. Wheels and Axles
10. Frame
11. Exhaust System
12. Tires
13. Headlights
14. Taillights
15. Registration Plates and Rear Plate Lighting
16. Directional Lights
17. Rear Reflector
18. Body elements and Sheet Metal Hazards
19. Splash Guards
20. Catalytic Converter on 1983 and subsequent models
21. Gas Cap Pressure (if applicable)
22. On-Board Diagnostic (if applicable)

115.20 Class D Inspection Sequence

The following items, at a minimum, shall be inspected as part of a Class D inspection:

1. Service Brakes
2. Emergency and/or Parking Brakes
3. Brake Hoses and Tubing

4. Low Air Pressure Warning Device
5. Tractor Protection Valve
6. Air Compressor
7. Vacuum Systems
8. Coupling Devices
9. Exhaust System
10. Fuel System
11. Lighting Devices
12. Turn Signal System
13. Wiring and Switches
14. Rear Lamps and Lighting Devices
15. Reflectors
16. Steering System
17. Suspension
18. Frame
19. Tires
20. Wheels and Rims
21. Window Glazing
22. Windshield Wipers
23. Rearview mirrors
24. Sun visor
25. Gas Cap Pressure (if applicable)
26. On Board Diagnostics (if applicable)

115.30 Class C Inspection Sequence

The following items, at a minimum, shall be inspected as part of a Class C inspection:

1. Brake
2. Horn
3. Rearview Mirror
4. Steering Mechanism
5. Suspension System and Drive Shaft or Chain
6. Wheels and Axles
7. Frame
8. Exhaust System
9. Tires
10. Headlights
11. Taillights
12. Registration Plate and Rear Plate Lighting
13. Directional Lights
14. Rear Reflector
15. Body Elements and Sheet Metal Hazards

115.40 Class E Inspection Sequence and reporting requirements

In addition to inspection items required for the appropriate class of vehicle, the following procedures shall be performed as part of a Class E inspection:

1. Gas Cap Pressure Test Procedure (This test is only required if the vehicle is not equipped with an OBD II system that monitors the evaporative system of the engine. If the vehicle is so equipped with an OBD II system that monitors the evaporative system of the engine then skip to number 2.)

   A. The inspecting technician shall follow the manufacturer's instructions when using the gas cap pressure-testing device.

   B. Reject the vehicle if it does not pass the gas cap pressure test.

2. On-Board Diagnostic Test Procedure

   The inspecting technician shall conduct a visual and electronic examination of the on-board diagnostic system.

   A. Test Sequence

      (1) Connect an acceptable scan tool to the vehicle's data link connector.

      (2) Visually examine the instrument panel to determine if the Malfunction Indicator Light (MIL) illuminates when the ignition key is turned to the "key on, engine off" position.

      (3) Start the vehicle's engine, and following the scan tool manufacturer's instructions, determine:

         (a) The vehicle's readiness status;

         (b) Whether or not diagnostic trouble codes (DTCs) are present;

         (c) Malfunction Indicator Light (MIL) status (on or off).

   B. Reject the vehicle if the data link connector is missing, has been tampered with, or is otherwise inoperable.

   C. Reject the vehicle if the Malfunction Indicator Light (MIL) does not illuminate when the ignition key is turned to the "key on, engine off" position. It is acceptable for the MIL to go out within a few seconds after the key is turned to the "key on, engine off" position.

D. Reject the vehicle if the Diagnostic Trouble Codes (DTC's) are present and the MIL status, as indicated by the scan tool, is on. Do not fail the vehicle if DTC's are present and the MIL status is off. MIL status must be determined with the engine running.

E. A vehicle shall be considered "not ready" for testing if; no DTC's are present, the MIL is not commanded to be illuminated, and -- for 1996 to 2000 vehicles, 3 or more monitors are incomplete or (for 2001 or newer model year vehicles), 2 or more monitors are incomplete.

F. All new vehicles with less than 1000 miles on the odometer are exempt from the readiness status. Some makes of vehicles are also exempt from the readiness status because of manufacturer's problems. A list of exempted vehicles may be obtained from the Maine Department of Environmental Protection.

G. The station shall provide information to the vehicle owner on how to make the vehicle ready for testing. The vehicle shall return after self-correction. An additional inspection fee may be charged for a retest.

115.50 Class E Inspection Reporting Requirements

Inspection Technicians who perform an OBD-II Class E inspection on any vehicle must fill out and return within 30 days of completion the OBD form provided by the Maine Department of Environmental Protection. The forms must be returned to the Maine State Police Inspection Unit office with stub sheets, or returned directly to the Maine Department of Environmental Protection.

16 DEPARTMENT OF PUBLIC SAFETY

222 BUREAU OF STATE POLICE

SECTION 120: RESPONSIBILITIES OF INSPECTION TECHNICIAN LICENSEES

SUMMARY: This section describes the responsibilities and requirements of an Inspection Technician licensee. For the purposes of this section, the terms "Inspection Technician" and "licensee" are used interchangeably.

120.01 RESPONSIBILITIES OF INSPECTION TECHNICIANS

1. Every Inspection Technician is required to be familiar with and understand this Chapter. An Inspection Technician is required to have access to a written or electronic copy of the Motor Vehicle Inspection rules.

NOTE: This Chapter is available online or available in various formats from the Maine State Police.

2. Prior to engaging in motor vehicle inspections for a new employer, an Inspection Technician shall notify the State Police Inspection Unit of the change of place of employment. The notification may be made by the Licensee at the request of the Inspection Technician.

3. During the term of licensure, an Inspection Technician must immediately report to the State Police Inspection Unit any convictions for violating 29-A MRSA § 1768, any suspension of the Inspection Technician's license to operate a motor vehicle, and any criminal convictions. Failure to report such convictions shall be grounds for suspension or revocation of the Inspection Technician's motor vehicle inspection license.

4. If an Inspection Technician's driver's license is suspended or revoked for any reason, the Inspection Technician must immediately inform the State Police Inspection Unit of the reason and the dates of the suspension or revocation and must return his or her license certificate to the State Police.

5. If a certified Inspection Technician, based on training, education, and experience, believes that a vehicle is not mechanically safe or that it poses a hazard to the occupants of the vehicle or to the general public under Maine law, the Inspection Technician must refuse to issue an inspection sticker to that vehicle. If the Inspection Technician refuses to issue an inspection sticker to the vehicle pursuant to this paragraph, the Inspection Technician shall supply the owner of the vehicle with a written list of the vehicle's deficiencies. The Inspection Technician shall cut the sticker diagonally and

remove the portion of the sticker that does not display the month of expiration.

NOTE: Inspection Technicians should remember that some vehicles with a gross vehicle weight or gross vehicle weight rating in excess of 10,001 pounds, as well as many Class D vehicles, are subject to the Federal Motor Carrier Safety Regulations. Inspection Technicians therefore should be familiar with those regulations.

16 DEPARTMENT OF PUBLIC SAFETY

222 BUREAU OF STATE POLICE

SECTION 130: STICKER REPLACEMENT STATIONS, WINDOW TINT STATIONS AND AGENTS

SUMMARY: This Section describes the requirements and responsibilities of Sticker Replacement Stations, Window Tint Stations, and their Agents.

130.01 REPLACEMENT STICKER & WINDOW TINT STATIONS - GENERAL REQUIREMENTS AND RESPONSIBILITIES

1. An agent must comply with Maine statutes and this Chapter regarding motor vehicle inspections.

2. An agent shall be responsible for maintaining in good condition all equipment and supplies issued by the Maine State Police.

3. An agent shall have available during normal business hours for inspection by a State Police officer or an employee of the State Police designated as a Motor Vehicle Inspector, all materials concerning inspection stickers or Window Tint certificates that are required or issued.

4. A sticker replacement station with a mobile glass replacement service must ensure the security of inspection stickers by establishing procedures for stickers that travel with the mobile service.

5. An agent shall inform the Maine State Police Inspection Unit of the names of those employees who are authorized to issue replacement stickers or tint certificates.

6. An agent shall inform, in writing, the Maine State Police Inspection Unit when a person authorized to issue replacement stickers or tint certificates leaves the employ of the station or is no longer authorized to issue stickers or certificates.

7. An agent shall inform, in writing, the Maine State Police Inspection Unit when a new employee is authorized to issue replacement stickers or tint certificates.

130.10 RESPONSIBILITIES OF AGENTS

1. An agent shall not conduct a safety inspection on any vehicle.

2. Replacement Sticker Agent responsibilities:

   A. The Agent shall issue a replacement sticker for a replacement windshield only when the original sticker is destroyed or damaged to the point where it cannot be transferred to the replacement windshield.

   B. Agents shall clearly write the word “replacement” on the back of the replacement sticker.

   C. Agents shall cut out the same month block as was cut out on the original sticker.

   D. Agents may charge the customer the actual cost of the sticker.

   E. Agents shall copy all the information from the old sticker onto the back of the replacement sticker. In the station number space, agents shall write both the station number of the original station and station number of the replacement station.

   F. Agents shall write the original station number and the serial number of the original sticker on the stub sheet of the replacement sticker. The original sticker shall be attached to the back of the stub sheet of the replacement sticker.

   G. Agents shall ensure that replacement stickers are issued only for a vehicle that had a valid, current inspection sticker attached at the time of replacement.

   H. Agents shall ensure that replacement stickers are issued to only those vehicles for which the agent replaced the windshield.

   I. Agents shall ensure that all employees are familiar with Maine statutes and rules regarding the replacement of inspection stickers.

   J. Agents shall only attest to the fact that a valid inspection sticker was displayed on the original windshield at the time of the glass replacement.

3. Window Tint Agent responsibilities:

   A. Agents shall install tint material and issue tint certificates in accordance with Maine law and this Chapter.

   B. Agents shall utilize a light meter for determining the percentage of light transmittance and compliance with Maine law and this Chapter.

16 DEPARTMENT OF PUBLIC SAFETY

222 BUREAU OF STATE POLICE

SECTION 140: CERTIFICATES OF INSPECTION ("INSPECTION STICKERS")

SUMMARY: This section describes the processes for ordering, maintaining, and issuing certificates of inspection ("inspection stickers"). This section also describes the procedures for returning inspection sticker stub sheets and reporting stolen inspection stickers.

140.01 ORDERING INSPECTION STICKERS

1. Inspection stickers must be ordered by utilizing the form designated by the Maine State Police Inspection Unit. Requests for inspection stickers without the proper form and full payment will not be processed.

2. Payment for inspection stickers must be made by check or money order. Checks and money orders must be made payable to: "Treasurer - State of Maine."

3. Inspection stickers will not be issued or sold to stations that have been suspended, revoked, or have been listed as inactive for any reason.

4. Inspection stickers shall be ordered through the mail. Walk-in customers may purchase stickers at the Traffic Division office, but these transactions are to be reserved for emergencies only. Walk-in customers must pay for the stickers with a business check that bears the name of the business, or a personal check from the inspection station licensee. Verification of the identity of the purchasing agent may be required. The amount of stickers sold to walk-in customers may be limited.

140.05 ISSUANCE OF INSPECTION STICKERS.

1. After a vehicle has passed an inspection, the Inspection Technician shall completely and legibly fill out all information on the inspection sticker and corresponding stub sheet, to include the inspection station number, full date of the inspection, full vehicle identification number, full current odometer reading, registration number and type code.

2. The Inspection Technician shall fill in the complete Vehicle Identification Number.

3. The Inspection Technician shall sign and legibly print his or her full name.

4. The Inspection Technician shall remove the numerical block indicating the month of expiration. The entire block shall be removed. The inspection sticker shall not be modified or altered other than as required by rule.

5. The Inspection Technician shall apply the inspection sticker to the windshield of the vehicle, either in the lower left corner or in the center of the windshield behind the rear view mirror. If the vehicle does not normally come with a windshield, the inspection sticker must be kept with the registration.

6. Motorcycle inspection stickers shall be affixed to the registration plate.

7. If the inspected vehicle is a limited use vehicle subject only to a partial inspection, the word “partial” shall be legibly written in the margin of the corresponding sticker and stub sheet.

8. If the vehicle does not pass inspection, the Inspection Technician shall cut the sticker diagonally and remove the portion of the sticker that does not display the month of expiration. The inspection technician shall supply the owner of the vehicle with a written list of the vehicle deficiencies.

9. Class E Inspection Stickers

   A. Class E inspection stations in Cumberland County shall issue only Class E inspection stickers for automobiles and trucks.

   B. Class E inspection stickers shall be printed with a large E in the center of the sticker. Class E inspection stickers shall be printed as either “MOTOR VEHICLE” for Class A vehicles or “COMMERCIAL” for Class D vehicles.

   C. Motorcycles registered in Cumberland County shall be issued “MOTORCYCLE” stickers.

   D. School buses registered in Cumberland County shall be issued “SCHOOL BUS” stickers.

140.10 RETURN OF STUB SHEETS

Completed stub sheets must be returned to the Maine State Police Inspection Unit office within 30 days after the issuance of the last sticker on the sheet. The stub sheets must be completely filled out and shall not be separated at the perforations. The date of receipt of the stub sheets by the Motor Vehicle Inspection Unit shall be used to determine compliance with this requirement. (Stations must maintain photocopies of all stubs sheets at their location for a period of two years and make them available to Law Enforcement Officers or Motor Vehicle Inspectors during normal business hours. Other in house tracking systems may be approved by the Motor Vehicle Inspection Unit, if a photo copier is not available.140.15 EXPIRATION OF STICKERS

1. Inspection stickers expire one year from the last day of the month in which they were issued.

NOTE: For example, any sticker issued any time during the month of June 2011 will expire at midnight on June 30, 2012.

2. Licensees or Inspection Technicians may not issue after December 31 an inspection sticker provided for use during the prior calendar year. School Bus stations may use the prior year's stickers during the first 6 months of the year.

140.20 VOID STICKERS AND STOLEN OR LOST STICKERS

1. If an inspection sticker is damaged, unusable, or must be declared void for any reason, the Technician shall write on the stub sheet the reason for voiding the corresponding sticker, and attach the voided sticker to the stub sheet.

2. A licensee who discovers or becomes aware of the theft or loss of inspection stickers shall report that information to the station licensee immediately. The Technician or Inspection Station Licensee shall immediately report the loss or theft to the Maine State Police Inspection Unit. This report shall include the facts surrounding the loss or theft, the serial numbers of all missing stickers, and a list of person(s) who had access to the stickers at the time of the loss.

3. The loss or theft must also be reported to the appropriate law enforcement agency for further investigation.

140.25 SCHOOL BUS INSPECTION STICKERS AND FORMS

1. All school buses must be inspected twice annually. The expiration date shall be the last day of the month six months after the issuance of the sticker. The Inspection Technician shall remove the block indicating the following six-month expiration.

NOTE: For example, stickers issued during February shall have block 8 removed and expire the last day in August. Stickers issued during August shall have block 2 removed and expire the last day in February.

2. An Inspection Technician who inspects a school bus and issues an inspection sticker shall complete and furnish a minimum of two copies of

the “Report of School Bus Inspection” form. The “Report of School Bus Inspection” shall be kept inside the bus and shall be available at the time of subsequent inspection to the Maine State Police.

140.30 TRAILER STICKERS

Trailer inspection stickers are bound in sheets with an attached, corresponding stub sheet. Trailer inspection stickers have an adhesive backing. The completed sticker shall be placed on the lower left lateral side of the trailer. The sticker must be readily visible to a person standing upright next to the trailer.

16 DEPARTMENT OF PUBLIC SAFETY

222 BUREAU OF STATE POLICE

SECTION 150: STANDARDS AND PROCEDURES FOR LICENSURE

SUMMARY: This section describes the standards and procedures for application of the various types of licenses.

150.01 INSPECTION TECHNICIAN APPLICATION PROCESS

1. Application Requirements

   A. An Inspection Technician must be at least 18 years of age. The State Police may process an application and test an applicant up to six months prior to the applicant's 18th birthday, but shall not issue the certificate (hereafter "license") until the applicant is 18 years of age.

   B. An Inspection Technician must have an active driver's license and a valid right to operate a motor vehicle in Maine.

2. Application Process

   A. An applicant for an Inspection Technician's license must apply on form(s) designated by the Maine State Police.

   B. The completed application and full payment of fees shall be sent to the Maine State Police Motor Vehicle Inspection Unit. Payment must be made by check or money order made payable to "Treasurer - State of Maine."

   Note: Applicants should contact the Maine State Police Inspection Unit or check the Inspection Unit's website for current fee information. Applicants should note that there will be a charge for a State Bureau of Identification criminal records check.

   C. False written statements on the application will be grounds to deny the applicant a license or will result in a license suspension if an Inspection Technician's license has been issued. False written statements may also result in criminal prosecution.

   D. An applicant must take an examination designed to test knowledge of motor vehicle inspection and the method(s) of inspecting and testing motor vehicle equipment. An applicant must pass this examination with a score of at least 70%.

E. A person who fails the examination may be required to wait 90 days before re-testing.

F. Applicants for a Class E Inspection Technician's license must either already be licensed to inspect vehicles that an Inspection Technician with a Class A license may inspect, or must be concurrently applying to receive a Class A Inspection Technician's license. An applicant may test for both classes of license at the same time.

G. Applicants for a Class D Inspection Technician's license must either already be licensed to inspect vehicles that an Inspection Technician with a Class A license may inspect, or must be concurrently applying to receive a Class A Inspection Technician's license. An applicant may test for both classes of license at the same time.

H. Applicants for a Class B Inspection Technician's license must either already be licensed to inspect vehicles that an Inspection Technician with a Class A and Class D license may inspect, or must be concurrently applying to receive both Class A and Class D Inspection Technician's licenses. An applicant may test for all three classes of license at the same time.

3. Criteria for licensure for any class of Inspection Technician license

A. An Inspection Technician must be a person of honesty, integrity, and reliability, which shall be determined by considering the following criteria:

(1) Criminal convictions, subject to Maine law.

(2) Whether the applicant has been adjudicated for a motor vehicle infraction or infractions related to vehicle equipment or motor vehicle inspections during the twelve (12) months prior to the date of application.

(3) Whether the applicant's driver's license or right to operate a motor vehicle has been suspended or revoked during the three (3) years prior to the date of application.

(4) Any other information that the Maine State Police deems relevant to ascertaining the honesty, integrity, and reliability of an applicant including, but not limited to, violations of these rules.

4. The Maine State Police shall utilize, at a minimum, the following resources to determine the suitability of an applicant for licensure pursuant to this Chapter and applicable law:

A. State Bureau of Identification criminal history check;

B. Criminal history information from other states or jurisdictions;

C. Records of motor vehicle violations;

D. Records of administrative violations or other information relating to motor vehicle equipment or inspections.

5. An Inspection Technician license is valid for five years from the date of issue.

6. The license issued to an Inspection Technician shall designate the type(s) of vehicles that may be inspected by that Inspection Technician.

7. If a license application is denied, an applicant must be notified of the denial in writing. The denial must include a brief explanation of the reason for the denial. A denial of a license application is final agency action.

8. If a license application is denied, the operator applicant may reapply for licensure after a specified time period noted in the denial letter.

9. An applicant may appeal a decision denying an application for licensure pursuant to Title 5 MRSA, Chapter 375.

150.05 INSPECTION STATION LICENSE APPLICATION PROCESS1. Application Process

A. The owner (licensee) may apply for an Inspection Station license using form(s) designated by the Maine State Police.

B. The completed application and full payment of fees shall be sent to the Maine State Police Motor Vehicle Inspection Unit. Payment must be made by check or money order made payable to "Treasurer State of Maine."

NOTE: Applicants should contact the Maine State Police Inspection Unit or check the Inspection Unit's website for current fee information. Applicants should note that there will be a charge for a State Bureau of Identification criminal records check.

C. False written statements on the application will be grounds to deny the applicant a license or will result in a license suspension if a license has been issued. False written statements may also result in criminal prosecution.

2. Criteria for licensure

A. Pursuant to statute, an application for licensure as an inspection station shall require that the station premises be examined and that the owner (licensee) and on-site manager be evaluated as to fitness and reliability. The determination of fitness and reliability of each applicant shall be made by considering the following criteria:

(1) Criminal convictions, subject to Maine law.

(2) Whether the applicant has committed a motor vehicle infraction related to vehicle equipment or motor vehicle inspections during the twelve (12) months prior to the date of application.

(3) Whether the applicant's driver's license or right to operate a motor vehicle has been suspended or revoked during the three (3) years prior to the date of application.

(4) Any other information that the Maine State Police deems relevant to ascertaining the honesty, integrity, and reliability of an operator applicant including, but not limited to, violations of these rules.

B. The Maine State Police shall utilize, at a minimum, the following resources to determine the suitability of an applicant for licensure pursuant to this Chapter and applicable law:

(1) State Bureau of Identification criminal history check.

(2) Criminal history information from other states or jurisdictions.

(3) Records of motor vehicle violations.

(4) Records of administrative violations or other information relating to motor vehicle inspections.

C. The station must meet the criteria for premises and tools as set forth in this Chapter.

D. An Inspection Station license is valid for two years.

3. The station license certificate issued to an inspection station shall designate the type of vehicle(s) that may be inspected at that station.

4. If an Inspection Station license application is denied, the applicant must be notified of the denial in writing. The denial must include a brief explanation of the reason for the denial.

5. If a license application is denied, the operator applicant may reapply for licensure after a specified time period noted in the denial letter.

6. Hearings and appeals:

If a person is aggrieved by a decision to deny licensure, that person may, within thirty (30) days of notification of the denial of licensure, request a hearing before the Chief of the State Police or his or her designee. After the hearing, if an applicant is aggrieved by the final decision of the Chief, which decision is final agency action, the applicant may appeal the decision in accordance with applicable law. The date of receipt by the State Police of this written request shall be used to determine compliance with this requirement.

150.10 STICKER REPLACEMENT AND WINDOW TINT STATION LICENSE APPLICATION PROCESSES

1. A business engaged in glass replacement as the primary source of income may apply to the Maine State Police for a license as a Sticker Replacement Station. A business engaged in vehicle window treatment or tinting may apply for a license as a window tint station.

2. Application Process

   A. An applicant for a Sticker Replacement Station or Window Tint Station license must apply on form(s) designated by the Maine State Police.

   B. The completed application and full payment of fees shall be sent to the Maine State Police Motor Vehicle Inspection Unit. Payment must be made by check or money order made payable to "Treasurer – State of Maine."

NOTES: Sticker Replacement or Window Tint Station applications, materials, and licensing fee information may be obtained online, by consulting additionally provided guides and materials, or by contacting the Maine State Police Inspection Unit office.

Applicants should contact the Maine State Police Inspection Unit or check the Inspection Unit's website for current fee information. Applicants should note that there will be a charge for a State Bureau of Identification criminal records check.

   C. False written statements on the application will be grounds to deny the applicant a license or will result in a license suspension if a license has been issued. False written statements may also result in criminal prosecution.

3. Criteria for licensure

   A. An application for licensure shall require that the station premises be examined, and the on-site manager (operator) applicant be evaluated as to fitness and reliability. The determination of fitness and reliability of an operator applicant shall be based upon consideration of the following criteria:

      (1) Criminal convictions, subject to Maine law.

      (2) Whether the applicant has committed a motor vehicle violation related to vehicle equipment or motor vehicle inspections during the twelve (12) months prior to the date of application.

(3) Whether the applicant's driver's license or right to operate a motor vehicle has been suspended or revoked during the three (3) years prior to the date of application.

(4) Any other information that the Maine State Police deems relevant to ascertaining the honesty, integrity, and reliability of an operator applicant including, but not limited to, violations of these rules.

B. The Maine State Police shall utilize, at a minimum, the following resources to determine the suitability of an applicant for licensure pursuant to this Chapter and applicable law:

(1) State Bureau of Identification criminal history check.

(2) Criminal history information from other states or jurisdictions.

(3) Records of motor vehicle violations.

(4) Records of administrative violations or other information relating to motor vehicle inspections.

C. The station must meet the criteria for premises and tools as set forth in this Chapter.

D. A Sticker Replacement or Window Tint Station license is valid for two (2) years from the date of issuance.

4. If a license application is denied, the operator applicant may reapply for licensure after a specified time period noted in the denial letter.

5. Notice; appeal.

A. If a Sticker Replacement or Window Tint Station license is denied, the operator applicant making application must be notified of the denial in writing. The denial must include a brief explanation of the reason for the denial. A denial of a license is final agency action.

B. An applicant may appeal a decision denying an application for licensure pursuant to Title 5 MRSA, Chapter 375.

16 DEPARTMENT OF PUBLIC SAFETY

222 BUREAU OF STATE POLICE

SECTION 160: LICENSE RENEWAL, SUSPENSION OR REVOCATION PROCESSES

SUMMARY: This Section describes the license renewal criteria, as well as the process for the suspension or revocation of a license. The Section also explains the process for a licensee to request a hearing to appeal a suspension or revocation pursuant to the Maine Administrative Procedures Act. For the purposes of this Section, the term “licensee” applies to a person licensed as an Inspection Technician or to whom an Inspection Station license, Fleet Station license, Sticker Replacement Station license, or Window Tint Station license has been granted.

160.01 LICENSE RENEWAL CRITERIA

1. An Inspection Technician shall submit an application for renewal prior to the expiration date of the license.

NOTE: To ensure timely processing, the application should be submitted thirty (30) days prior to the expiration of a license. An application will not be accepted as complete unless it includes all materials required for licensure. Information regarding current fees for license renewal may be obtained from the Inspection Unit.

2. A person may renew a license for up to 180 days following the date of expiration. The 180-day period does not postpone the expiration date of the license. Inspection Technicians whose licenses have lapsed as of the expiration date cannot exercise the privileges of the license until a renewed license has been issued.

3. An application submitted more than 180 days after the license expiration date shall be considered an application for a new license and subject to all requirements governing new applications, with the exception that an examination is not required if application is made within one year of expiration. The date of receipt of the application at the Motor Vehicle Inspection Unit office shall be used to determine compliance with this requirement.

160.02 SUSPENSIONS OR REVOCATION OF LICENSE

For the purposes of this subsection and subsection 160.03 the "licensee" means either the station license holder or an Inspection Technician.

1. If a licensee violates any Maine law or any rule relating to motor vehicle inspections including, but not limited to, this Chapter generally a State Police officer or an employee of the State Police designated as a Motor Vehicle Inspector may suspend the license pursuant to Maine law. The suspension shall be for a period of up to six months for the first offense. A second violation will be grounds for a suspension of up to one year or complete revocation of license.

   In determining the applicability of previous violations, the Bureau shall ascertain whether or not a previous violation has been committed within the previous five (5) years.

2. A State Police officer or an employee of the State Police designated as a Motor Vehicle Inspector may warn a licensee for minor violations of statute or rules relating to motor vehicle inspections. Repeated warnings may become the basis for a license suspension or revocation.

3. If a license expires during the period of suspension, the licensee must apply for a license renewal as described in this Chapter.

160.03 APPEALS AND HEARING PROCESS

1. A licensee who wishes to contest a suspension or revocation must request a hearing pursuant to Title 5 MRSA, Chapter 375. This request must be made in writing within thirty (30) days of the date of the suspension or revocation and must be sent to the Maine State Police Inspection Unit. The suspension or revocation shall remain in effect pending hearing or appeal. The date of receipt of such request at the Motor Vehicle Inspection Unit office shall be used to determine compliance with this requirement.

2. Hearing shall be conducted pursuant to Title 5 MRSA, Chapter 375.

3. A decision issued following a hearing is final agency action.

16 DEPARTMENT OF PUBLIC SAFETY

222 BUREAU OF STATE POLICE

SECTION 170: CLASSES A & E MOTOR VEHICLE INSPECTION STANDARDS

SUMMARY: This section describes the inspection procedures, standards, and parts of the vehicle that must be inspected for class A and E vehicles. This section also establishes the standards for rejecting the vehicles for inspection. All vehicles inspected in the State Maine must have met all applicable Federal Motor Vehicle Safety Standards, Environmental Protection Agency pollutant requirements and National Highway Traffic and Safety Administration crash testing requirements at the time of manufacture, unless otherwise authorized by law.

DEFINITION: For the purposes of this section, the term "**reject vehicle"** means to fail to approve a vehicle for inspection or refuse to issue an inspection sticker.

170.01 CLASS A MOTOR VEHICLE INSPECTION

1. BRAKES

A. Procedure and Standard;

(1) Brake Hydraulic System: Depress the brake pedal using moderate foot force. There should be a minimum of approximately 1/3 of the available pedal travel remaining. Moderate force is defined as 40 to 60 pounds in a non-power system, and 15-20 pounds in a power-assist system. Check power-assist system with the engine running.

(a) Reject vehicle if less than 1/3 of the total available pedal travel remains when the pedal is depressed under moderate foot pressure.

(2) Service Brake and Transmission Test: Test the vehicle by driving it into the service area. Observe whether the vehicle comes to a smooth stop without pulling to the left or right. Test the vehicle's transmission forward and reverse gears as well as the park position in automatic transmissions to ensure proper working order.

(a) Reject vehicle if it does not stop smoothly or if it pulls to the left or right.

(b) Reject vehicle if it not equipped with brakes on all axles.

(c) Reject vehicle if the forward or reverse gears are inoperative.

(d) Reject vehicle if the park position is inoperative.

(e) Reject vehicle if any brake malfunction light indicates a malfunction with any equipment required to be inspected.

(f) Reject vehicle if any malfunction indicator light for any equipment required to be inspected fails to illuminate properly. The lights should illuminate when the ignition key is in the on position with the engine not running.

(3) Anti-Lock Braking Systems: If the vehicle is equipped with an ABS brake system, visually and manually inspect the warning light.

(a) Reject vehicle if the warning light fails to illuminate during the cycle or self-check, or if the light remains on, or a self-diagnostic error is indicated.

(b) Reject vehicle if the ABS braking systems is disconnected or disabled or removed.

(4) Parking Brake Performance

Set the parking brake firmly to determine the reserve travel of the hand lever or foot pedal. If the vehicle is equipped with the “band” type parking brake, inspect the propeller (drive) shaft for the presence of oil or grease, the condition of the lining, and tightness.

(a) Reject vehicle if the parking brake does not hold the vehicle upon testing.

(b) Reject vehicle if the method of applying the parking and service brakes are connected and are constructed so that failure of one part leaves the vehicle without operative brakes.

(c) Reject vehicle if there is no reserve travel in the lever or pedal unless designed with no reserve by the manufacturer.

(d) Reject vehicle if there is oil or grease on the drum or lining.

(e) Reject vehicle if the lining is worn through to the steel band.

(f) Reject vehicle if parking brake fails to properly disengage.

B. Inspection of Braking Mechanisms

(1) Brake Linings and Disc Brake Pads

If in the judgment of the Inspection Technician it is necessary (and with the customer's consent), the Technician may remove at least one front wheel and one rear wheel and drum to further examine the brakes.

(a) Reject vehicle if, on a bonded lining, the thinnest point is less than 2/32 inch.

(b) Reject vehicle if, on a wire-backed lining, the wire backing is visible on the friction surface.

(c) Reject vehicle if, on a riveted lining, the lining is worn to within 2/32 inch of any rivet head.

(d) Reject vehicle if, on a riveted lining, any rivets are loose or missing.

(e) Reject vehicle if the lining is broken or not firmly and completely attached to the shoe.

(f) Reject vehicle if the lining is cracked to a depth in excess of 50% of the lining thickness.

(g) Reject vehicle if the lining friction surface is contaminated with oil, brake fluid, or grease.

(h) Reject vehicle if the lining wear is extraordinarily uneven.

(2) Brake Drums and Brake Discs

(a) Reject vehicle if there are substantial cracks on the friction surface extending to the open edge.

(b) Reject vehicle if there are external cracks.

(c) Reject vehicle if there is evidence of mechanical damage other than wear.

(d) Reject vehicle if the friction surface is contaminated with oil, grease, brake fluid, or appears excessively rusted so that the integrity of the drum or disk is compromised or the braking efficiency is compromised.

(e) Reject vehicle if the inside diameter is greater than the maximum diameter stamped on the drum, or the manufacturers discard limit.

(f) Reject vehicle if the thickness of a disc is less than the minimum thickness stamped on the disc, or less than the manufacturers discard limit.

C. Visual Inspection of the Hydraulic System.

(1) Reject vehicle if the master cylinder leaks.

(2) Reject vehicle if the master cylinder is less than ½ full or below the manufacturer's specifications.

(3) Reject vehicle if the gasket is torn or missing.

(4) Reject vehicle if the wheel cylinders leak.

(5) Reject vehicle if the hoses or tubing's leak, or are cracked, chafed, flattened, restricted, or are insecurely fastened.

(6) Reject vehicle if the brake tubing is rusted to a point of flaking, is bulging, pitting or has welded sections. **Surface rust is not a cause for rejection.**

(7) Reject vehicle if any replacement hydraulic brake lines are made with material other than automotive rated tubing that meets SAE standards or if the safety tubing is not joined with a SAE approved fitting to ensure a leak proof joint.

D. Visual Inspection for Hydraulic Brakes

This includes "power assist over hydraulic" and "engine drive hydraulic booster" systems.

(1) Reject vehicle if, while the engine is running there is no pedal reserve except by pumping the pedal.

(2) Reject vehicle if the power assist unit fails to operate.

(3) Reject vehicle if any brake hose seeps or swells under application of pressure.

(4) Reject vehicle if the check valve is missing or inoperative.

(5) Reject vehicle if there is any visually observed leaking hydraulic fluid in the brake system.

(6) Reject vehicle if any hydraulic hose is abraded (chafed) through the outer cover-to-fabric layer.

(7) Reject vehicle if any fluid line or connections are leaking, restricted, crimped, cracked, or broken.

(8) Reject vehicle if the hydraulic pump drive belt is loose, cracked, slipping, or missing.

E. Visual Inspection for Power-Braked Vehicles

(1) Reject vehicle if any hoses or tubes are leaking or collapsed, broken, excessively rusted, badly chafed, improperly supported, or loose because of broken clamps.

(2) Reject vehicle if there is insufficient vacuum reserve to permit one full brake application after the engine is shut off.

(3) Reject vehicle if any vacuum hose or line is restricted, abraded, or chafed through the outer cover to the cord ply, crimped cracked, broken or if any vacuum hoses collapses when vacuum is applied.

F. Visual Inspection of the Mechanical Linkage

(1) Reject vehicle if any pins are worn or missing or if there are defective cotter pins.

(2) Reject vehicle if there are any weak, broken or missing springs or worn cables, clevises, coupling rods, or anchor pins.

(3) Reject vehicle if there are any frozen, rusted, or inoperative connections.

(4) Reject vehicle if the pedal shaft or any bearings are worn from high friction or are misaligned.

(5) Reject vehicle if the shoe movement is restricted at the backing plate or if there is binding between the brake shoes or pads and the anchor pins.

(6) Reject vehicle if any mechanical parts are missing, broken, or badly worn.

(7) Reject vehicle if there is high friction in pedal and linkage or in brake components.

(8) Reject vehicle if any brake operating levers are improperly positioned or misaligned.

(9) Reject vehicle if the brake pads are binding on the caliper brackets or if the brake slides are frozen.

2. BODY COMPONENTS

A. Vehicle Exterior

(1) Reject vehicle if body exterior components or sheet metal parts are rusted or damaged to an extent that the rust or damage presents a safety hazard to occupants, pedestrians, cyclists or other vehicles.

(2) Reject vehicle if exterior sheet metal directly surrounding and leading to the trunk and passenger compartment has holes caused by damage or rust. **Surface rust is not a cause for rejection.**

(3) Reject vehicle if any required body exterior components, including hood, fenders, quarter panels, and side panels, are loose, missing or not securely attached to the body as a result of damage, modification or rust.

(4) Reject vehicle if any door has inoperable latches, broken or missing parts, or otherwise fails to function properly. Rear door latches can be disabled on a police cruiser. A vehicle may have the door handles removed and the sheet metal and door opening mechanism of the vehicle modified to create a smooth appearance. There must be a mechanical method of opening any door from the inside of the vehicle.

(5) Reject vehicle if any rocker panel or floor pan has any holes so as to permit the passage of fumes or gases into the trunk or passenger compartments.

(6) Reject vehicle if any replacement repairs on the motor vehicle are not made with materials of the same strength as the original or that allow the passage of fumes or gases into the trunk or passenger compartments.

(7) Reject vehicle if, on a vehicle with unit construction, the body is rusted or modified to the extent that there is a danger of a vital part failure.

(8) Reject vehicle if the chassis frame is broken or rusted to such a degree that structural weakness is probable.

(9) Reject vehicle if the trunk compartment is not properly sealed and secured so as to prevent suction of exhaust fumes or gases into the trunk.

(10) Reject vehicle if the hood latch mechanism fails to operate properly unless it is otherwise secured so it will not open accidentally.

B. Fenders and Bumper protection systems

(1) Reject vehicle if, on a vehicle originally equipped with bumpers, any bumpers are missing or are not securely attached.

(2) Reject vehicle if any modification to, or replacement of the vehicle's originally equipped bumper protection system is not of the same apparent strength or results in less protection. A bumper protection system may consist of structural and/or cosmetic components (sheet metal or other material) designed to limit damage in a frontal or rear impact.

(3) Reject vehicle if the front or rear fenders have been removed.

(4) Reject vehicle if the fender does not cover the tire tread.

3. FUEL TANKS AND DELIVERY SYSTEM

A. Reject vehicle if the fuel tank is not properly or securely attached to the vehicle body or chassis.

B. Reject vehicle if the fuel cap is missing or broken.

C. Reject vehicle if any fuel evaporation hose is broken or not connected.

D. Reject vehicle if the fuel tank was not of a type originally manufactured for motor vehicles. Aftermarket auxiliary fuel tanks and fuel cells are acceptable as long as they meet all other requirements of this section, and any applicable federal or state law.

E. Reject vehicle if there is any fuel or gas leak anywhere in the fuel delivery system.

F. Reject vehicle if the fuel line is rusted to the point that failure is imminent.

G. Reject vehicle if the fuel tank or fuel tank filler, vent, or drain openings are not located outside the passenger or trunk areas.

H. Reject vehicle if any replacement fuel lines are made with material other than automotive-rated tubing or braided hose for fuel line use.

4. SEATS AND PASSENGER RESTRAINT SYSTEMS

A. Reject vehicle if any seat is not properly and securely attached to the floor.

B. Reject vehicle if any seat adjusting mechanism slips out of the set position or fails to function properly.

C. Reject vehicle if any replacement seat was not originally designed for motor vehicles.

D. Reject vehicle if seat belts are not installed in 1966 and subsequent models and retractable seat belts are not installed and functioning in 1980 and subsequent models.

E. Reject vehicle if any seat belts are not completely functional or if they have cuts or excessive fraying.

F. Reject vehicle if, with the engine running, any diagnostic light or malfunction code indicates that an air bag is not functioning properly.

G. Reject vehicle if any air bag diagnostic light fails to illuminate with the ignition key in the on position when the engine is not running.

H. Reject vehicle if any deployed air bag has not been properly replaced with a functioning air bag system.

I. Reject vehicle if any air bag has been disconnected or a non-factory disconnect switch has been installed, unless the vehicle owner has a letter of authorization from the National Highway Traffic Safety Administration. Law enforcement and mail carrier vehicles are exempt from this paragraph if in the opinion of the inspection technician the alteration is necessary.

5. OTHER VEHICLE COMPONENTS

A. Reject vehicle if automotive batteries are installed in the passenger compartment, other than those originally installed by the manufacturer.

B. Reject vehicle if the battery is not secured by a hold down.

C. Reject vehicle if the battery tray is rusted to the point where it no longer securely supports the battery.

D. Reject vehicle if automotive batteries originally installed by the manufacturer in the passenger compartment are not secured and equipped with a protective covering to prevent injury to or contact with any person.

E. Reject vehicle if it leaks oil in an amount or in such a location as to constitute a fire hazard.

F. Reject vehicle if it is registered for over 6,000 pounds and does not have splashguards. This does not apply to those vehicles exempt pursuant to applicable Maine law.

G. Reject vehicle if it is a truck with a dump body, and does not have a positive means of support, permanently attached and being capable of being locked in a position to prevent the unintentional lowering of the dump body.

H. Registration Plates;

(1) Reject vehicle if it does not have a registration plate attached to the front and the rear that are clearly visible and legible. Exception: only one dealer registration plate, transit registration plate or temporary registration plate is required to be displayed on applicable vehicles. Vehicles registered in another state may require only one registration plate.

(2) Reject vehicle if all registration plates are not displayed horizontally.

(3) A vehicle that is missing a registration plate because an original was lost, mutilated, or illegible may be inspected if it has a temporary registration plate bearing the registration number that is displayed as nearly as possible in the position occupied by the original plate and if the vehicle owner has a receipt from the Bureau of Motor Vehicles showing that a replacement registration plate has been ordered.

6. EXHAUST SYSTEM

A. Exhaust System Examination;

(1) The exhaust system includes the exhaust manifold, the piping leading from the flange at the exhaust manifold to and including the mufflers, the tail piping, and the catalytic converter.

(2) The exhaust system shall be examined by listening for exhaust leaks and shall be examined visually after either the vehicle has been lifted on a hoist, or has been jacked up sufficiently to allow a proper examination or is over a pit. Rusted or corroded areas must be examined carefully.

B. Rejection Standards;

(1) Reject vehicle if there are any loose or leaking joints or seams in the exhaust system.

(2) Reject vehicle if there are any holes in the exhaust system, other than small holes obviously made by the manufacturer to provide drainage.

(3) Reject vehicle if there are any loose interior baffles.

(4) Reject vehicle if the exhaust system has been inadequately repaired.

(5) Reject vehicle if any exhaust system elements are not fastened securely by use of hangers or clamps.

(6) Reject vehicle if any part of the exhaust system passes through the passenger compartment.

(7) Reject vehicle if the exhaust system does not discharge completely to the side or rear of the enclosed passenger portion of the body of the vehicle.

(8) Reject vehicle if it is not equipped with a muffler or mufflers that are effective in reducing noise. No muffler may be altered to amplify noise, and all mufflers must prevent excessive or unusual noise.

(9) Reject vehicle if it was manufactured after the 1982 model year and it is not equipped with a catalytic converter unless the vehicle was not originally equipped with a catalytic converter. NOTE*** If the vehicle was originally equipped with a catalytic converter, it must have one to pass inspection, even if the vehicle was manufactured in 1982 or prior years.

7. VEHICLE GLAZING

A. General Inspection;

(1) Inspect all glazing on the vehicle to ensure that all glazing is marked by a manufacturer's trademark and the words "American Standard'' or the letters "AS" followed by a number indicating the position in the vehicle where that glass may be used. AS-1 glass must be used in the windshield. AS-1 or AS-2 glass may be used in the side and rear windows.

NOTE: Reference: The American Standard Safety Code Z26.1 - 1969 "Safety Glazing Materials for Glazing Motor Vehicles Operating on Land Highways."

(2) Reject vehicle if it is not equipped with approved safety glass wherever glass is used in doors, windows, and windshields, if the vehicle was manufactured after December 31, 1937..

(3) Reject vehicle if cloudiness extends more than 1 inch from the top or sides or more than 4 inches from the bottom edge of the windshield and in the opinion of the inspecting technician obstructs the driver's clear view of the road.

(4) Reject vehicle if cloudiness on a divided windshield extends more than 1 inch on either side of the divider strip and in the opinion of the inspecting technician obstructs the driver's clear view of the road.

(5) Reject vehicle if, in the critical vision area of the windshield, there are any un-repaired bull's eye fractures, star fractures, stone bruises, cracks or chips that measure more than 1 inch at the extreme edges and in the opinion of the inspecting technician obstructs the driver's clear view of the road.

(6) Reject vehicle if there is any crack more than 6 inches long in the windshield.

(7) Reject vehicle if there is a windshield wiper scratch, mar or marks more than 4 inches long and ¼ inch wide on the windshield and in the opinion of the inspecting technician obstructs the driver's clear view of the road.

(8) Reject vehicle if it was originally equipped with a windshield by the manufacturer, and it does not have a windshield.

(9)Reject vehicle if either the left or right front window mechanism is not in working order.

10Reject vehicle if any glass is broken or shattered so as to obstruct the vision of the operator or endanger the occupants of the vehicle.

B. Glazing Repairs

(1) Reject vehicle if repairs made to a windshield impair the vision in the critical vision area.

(2) Reject vehicle if repairs to the windshield are not clear, are not refracting light in the same manner as the windshield, or are not free of cosmetic blemishes that extend more than 1 inch and in the opinion of the inspecting technician obstructs the driver's clear view of the road.

NOTE: Cosmetic blemishes are visible dirt, visible air bubbles that appear as silver or black spots, visible cracks with a discernible thickness and that appear as a black or silver lines, or cloudiness of the laminate.

C. Window Tinting, Treatments, or Coverings

(1) Reject vehicle if there are any items, other than items allowed by statute, hanging in or on the windshield, front side windows or rear window that obstruct or obscure the driver's view.

(2) Reject vehicle if any window is composed of, covered with or treated with any reflective material.

(3) Reject vehicle if the windshield has any tint that is not part of a factory installed original equipment windshield installed in accordance with FMVSS §205. A tinted sunshield strip that extends no more than 5 inches from the top of the windshield is permissible.

(4) Reject vehicle if the vehicle has tinted windows and the owner of the vehicle cannot provide the Inspection Technician with a certificate of compliance approved by the Bureau of the Maine State Police that states that the vehicle meets the standards set forth by Maine law and this Chapter for light transmittance.

(a) Any window tinting treatment or covering must be removed if it fails to meet the inspection standard.

(b) Vehicles equipped with tinted glass on the rear side windows and rear window are exempt from this requirement.

8. OTHER VEHICLE EQUIPMENT

A. Windshield Wipers

(1) Reject vehicle if it is not equipped with an adequate wiper or wipers.

(2) Reject vehicle if any windshield wiper does not operate freely or at a reasonable speed.

(3) Reject vehicle if any wiper blade is worn or if the metal part of the wiper makes contact with the windshield.

(4) Reject vehicle if the driver cannot reach and operate freely a hand wiper, if the vehicle is not equipped with automatic wipers.

B. Rear View Mirrors

(1) Reject vehicle if it does not have all the original factory installed rear view mirrors or their equivalent replacement. A vehicle with a dump body or similar obstruction (like an ambulance, cube van, etc.) is not required to have the inside rearview mirror.

(2) Reject vehicle if any mirror is not mounted securely to prevent its swinging or excessive vibration.

(3) Reject vehicle if any mirror does not give the driver a view of the road 200 feet to the rear.

(4) Reject vehicle if the reflecting surface is peeled, tarnished, or broken and in the opinion of the inspecting technician obstructs the driver's clear view in the mirror.

(5) Reject vehicle if any mirror cannot be adjusted, or will not maintain a set adjustment.

C. Sun visor

(1) Reject vehicle, if the sun visor cannot maintain a fixed position, if vehicle is equipped with a sun visor.

D. Horn

(1) Reject vehicle if it is not equipped with a horn properly wired to a functioning actuating device.

(2) Reject vehicle if the horn-actuating device is not easily accessible to the driver.

(3) Reject vehicle if the horn is not securely fastened to the vehicle.

9. LIGHTS AND ELECTRICAL

A. General Lamp Inspection

General lamp inspection includes inspection of reflex reflectors and of the following types of lamps: head, tail, stop, license, clearance, signal, marker, side marker and fog/driving lights. Any required original equipment light or its equivalent replacement must be present and functioning. Any auxiliary lights not prohibited by law or regulation that are added to the vehicle or installed as optional equipment by the manufacturer are not required to function (e.g. fog lights, lights on an off road roll bar, etc).

(1) Reject vehicle if any bulb in any lamp required by law or regulation fails to function properly.

(2) Reject vehicle if any lens is missing or broken, unless properly repaired.

(3) Reject vehicle if any headlamp has obvious discoloration, contamination or reflector deterioration, that reduces the lighting below safe operating levels.

(4) Reject vehicle if any lamp is not securely fastened to the vehicle.

(5) Reject vehicle if any lamp shows a beam of color, is installed, or functions in manner contrary to law.

(6) Reject vehicle if any lens or lamp required by law or regulation is covered by any device that reduces the amount of light transmitted or reduces the area of illumination of a lens or lamp by any amount. This includes, but is not limited to devices such as tints, baskets, louvers, and mesh covers that reduce the amount of light transmittance.

(7) Reject vehicle if the beam indicator lamps do not indicate the correct beam to the driver. Both high and low beams must be working properly.

(8) Reject vehicle if any lamp or lens is turned or inclined so that its light is not properly directed.

(9) Reject vehicle if any lens or reflex reflector is missing or broken, unless properly repaired.

(10) Reject vehicle if a headlamp, measured from its center, is located less than 22 inches or more than 54 inches above the level surface on which the vehicle stands. This restriction does not apply to vehicles equipped with a snowplow.

(11) Reject vehicle if the back up lights fail to function when the vehicle is placed in reverse gear.

(12) Reject vehicle if the back-up lights remain on when the vehicle is in any gear other than reverse.

(13) Reject if the vehicle is equipped with LED lighting and 50% or more of the LEDs are not functioning.

NOTE: Properly repaired means that the repair is made with a clear material or a material that is the same color of the lens and prevents moisture from entering the inside of the lens and that maintains the integrity of the unit. Tape is not considered to be an acceptable repair material.

B. Headlight Aiming

(1) Check for proper headlight aim.

Technicians shall rely on their education, training and experience to determine if the headlights are properly aimed.

C. Turn Signal System and Stop Lamps

(1) Reject vehicle if any standard factory equipment turn signal or its equivalent replacement is not in operating condition or does not function properly.

(2) Reject vehicle if the lens is not clear or white or amber to the front, or clear or red or amber in the rear.

(3) Reject vehicle if any lens is broken, unless properly repaired

(4) Reject vehicle if any lamp housing is not securely fastened.

(5) Reject vehicle if any proper signal does not operate properly with each throw of the switch.

(6) Reject vehicle if any stop lamp does not operate properly with slight pressure on the brake pedal.

(7) Reject vehicle if any stop lamp does not emit a steady or pulsating, red light.

(8) Reject vehicle if any turn signal or stop lamp is repaired with colored tape.

NOTE: If, at the time of inspection, the owner of a vehicle provides documentation that a replacement part has been ordered to replace a broken lamp or lens, the Technician may issue an inspection sticker if this replacement part is the sole reason for rejection.

.

D. Rear Lamps, License Plate Lamps and Rear Lamp Combinations

(1) Reject vehicle if any tail light bulb does not produce sufficient light so as to be visible from a distance of 100 feet to the rear.

(2) Reject vehicle if all taillights do not produce a red light.

(3) Reject vehicle if any taillight is broken (unless properly repaired), missing or discolored.

(4) Reject vehicle if any turn signal or stop lamp is repaired with colored tape.

(5) If, at the time of inspection, any tail light or stop lamp lens is broken and not properly repaired, the vehicle owner shall either replace the defective part or place an order through a selling agent. If the part is on order, the owner shall show proof at the request of the inspection technician, or any police officer, that the part is on order and that the full price of the part has been paid before an inspection sticker may be issued.

(6) Reject vehicle if any lamp is not securely mounted in the center or to the left of the axis.

(7) Reject vehicle if any taillight does not produce a steady light to the rear.

(8) Reject vehicle if any lamp housing is not securely fastened.

(9) Reject vehicle if the tail and rear plate lights do not operate properly in all switch positions.

(10) Reject vehicle if the license plate light bulbs do not produce sufficient steady white light to illuminate the entire rear license plate so as to be visible from a distance of 50 feet or more to the rear of the vehicle.

(11) Reject vehicle if any after-market lighting device is installed around or near the license plate and such device is of a color or function contrary to law.

NOTE: Properly repaired means that the repair is made with a clear material or a material is the same color of the lens and prevents moisture from entering the inside of the lens and that maintains the integrity of the unit. Tape is not considered to be an acceptable repair material.

E. Reflectors

(1) Reject vehicle if it is not equipped with at least one adequate reflector securely attached to the rear. The reflector(s) may be part of the rear lamp.

(2) Reject vehicle if the side marker reflectors on vehicles originally so equipped are missing.

(3) Reject vehicle if any reflector does not have a red lens.

(4) Reject vehicle if any lens is broken and not properly repaired.

(5) Reject vehicle if the reflectors are not adequate to reflect the high-beamed headlight of a vehicle, approaching from the rear and being driven at night on an unlighted highway, from a distance of 200 feet.

F. Optional Auxiliary Lighting and Under-Vehicle Lighting

(1) A vehicle may only be equipped with or display an auxiliary light if it conforms to the requirements of this section.

(2) Reject vehicle if any auxiliary light is not white or amber on the front of the vehicle.

(3) Reject vehicle if any auxiliary light is not amber on the side of the vehicle.

(4) Reject vehicle if any auxiliary light is not amber or red to the rear of the vehicle.

(5) Reject vehicle if an auxiliary light does not emit a steady beam. An auxiliary light may not blink, oscillate, rotate or flash.

(6) Reject vehicle if any auxiliary light emits a beam that is brighter than, has a greater candlepower than or distracts from the visibility of standard lighting equipment.

(7) Reject vehicle if any auxiliary light is installed in a manner or on the vehicle so that it distracts or impairs the vision of the driver.

(8) Reject vehicle if any blue interior auxiliary lighting or dash lighting is visible at a height of 42 inches or more above a surface parallel with the level surface on which the vehicle stands at a distance of 20 feet from any part of the vehicle.

(9) An auxiliary light is under-vehicle lighting if it is a lighting device or lamp, including, but not limited to, a neon or fluorescent tube, installed under the chassis and it is designed to illuminate and reflect from the surface beneath the vehicle.

(10) A vehicle may be equipped with under-vehicle lighting for the purpose of participating in shows, events or other exhibitions, but the under-vehicle lighting shall not be used when the vehicle is on a public way.

G. Speedometer

Reject vehicle if speedometer fails to operate.

10. STEERING, ALIGNMENT, AND SUSPENSION

A. Testing Methods

(1) All items listed under the definitions of steering linkage and suspension systems shall be examined and/ or tested as applicable.

(2) When specific technical measurements or tolerances are not listed in the inspection manual, the Inspection Technician shall refer to and follow the manufacturer’s technical guides or service manuals for the vehicle being inspected.

(3) Tie rods, idler arms, and pitman arms can be tested by the “dry park” method, described as follows; leave the weight of the vehicle on its suspension. Have an assistant rock the steering wheel back and forth while the Inspection Technician watches for any play or movement in the steering linkage.

NOTE: Tie rods shall not be tested by squeezing them with pliers or by other mechanical means. Use hand pressure only to test for looseness in an up and down direction. Excessive force can cause the pre-loaded spring inside the tie rod socket to compress, giving a false impression of looseness.

B. Tie Rods

(1) Reject vehicle if there is any looseness or play in the tie rod end, unless within the manufacturer's tolerance.

(2) Reject vehicle if the tie rod-adjusting sleeve is bent, cracked, or stripped.

(3) Reject vehicle if there is power steering fluid inside the boots of an inner rack and pinion tie rod end.

(4) Reject vehicle if the tie rod ends bind or do not rotate normally through the proper range.

(5) Reject vehicle if the movement of any steering component is in excess of the manufacturer's specifications.

C. Steering Lash

Testing: The vehicle must be on a smooth, dry, and level surface. On vehicles equipped with power steering, the engine must be running and the fluid level, belt tension, and belt condition must be adequate before testing.

With the wheel in a straight-ahead position, turn the steering wheel until the turning motion can be observed at the road wheels. Align a reference mark on the steering wheel with a mark on a ruler and slowly turn in the opposite direction until the front wheel motion is again detected. The steering lash is measured at the steering wheel.

(1) Reject vehicle if the power steering fluid is leaking from the rack and pinion.(Seepage is not a cause for rejection).

(2) Reject vehicle if any binding in the steering linkage is detected.

(3) Reject vehicle if the total movement is greater than the manufacturer's specifications

D. Linkage Play

Testing for linkage play:

(1) While the front end is supported on the lower control arm, hoist the vehicle from the cross member or frame. While the

front spring is supported by the upper control arm, hoist the vehicle at the lower control arm.

(2) With the front end lifted properly and the wheels in the straight ahead position, grasp the front and rear of a front tire and attempt to turn the assembly right and left. Record the movement of the extreme front or rear of tire.

NOTE: Do not jerk the wheel. Follow the manufacturer's recommendations for testing.

(3) On power steering equipped vehicles, the engine must be running while checking steering linkage play. Eliminate all wheel bearing movement by applying the service brake either with assistance from another person or by a mechanical brake holder.

(4) Reject vehicle if the measurement or movement is in excess of the manufacturer's specifications.

E. King Pins

(1) Testing: With the front end lifted from the axle, measure the movements at the top or bottom of the tire at the outer circumference. Eliminate all wheel bearing movement by applying the service brake either with assistance from another person or with a mechanical brake holder.

(2) Reject vehicle if the measured movement at the top or bottom of the tire is greater than the manufacturer's specifications.

F. Ball Joints

Inspection of ball joints on vehicle models prior to 1973 must be conducted with the joints unloaded. Ball joints with wear indicators (generally found on 1973 and subsequent models of vehicles) must be inspected with the ball joints loaded. Before inspecting the ball joints, check to see whether the joints need to be loaded or unloaded.

Testing:

(1) Testing of vehicles without wear indicators: Hoist the vehicle either by the lower control arm when the spring is supported by the lower control arm, or by the frame when the upper control arm supports the spring.

(2) To test the vertical movement, position a pry bar under the tire and with a lifting motion sufficient to overcome the weight of the wheel assembly, move the wheel up and down and observe the movement shown on the dial indicator.

(3) To test the horizontal movement, grasp the tire and wheel assembly at the top and bottom. Move it in and out to detect looseness.

(4) Testing of Vehicles with Wear Indicators: Support the vehicle with the ball joints in a loaded condition. Wipe the grease fitting and boss free of dirt and grease.

(5) Reject vehicle if the movement of the load carrying and/or non-load carrying ball joints exceed the manufacturer's specifications.

(6) Reject vehicle if the fitting boss is flush or inside the cover surface.

(7) Reject if the ball joint is severely rusted.

G. Springs, Torsion Bar, Shocks, Bushings, and Axles

(1) Reject vehicle if the leaf springs have loose, welded or broken leaves.

(2) Reject vehicle if the coil springs or spring perches are broken, not securely mounted or are extended by spacers or blocks.

(3) Reject vehicle if coil springs are welded.

(4) Reject vehicle if there are loose, missing, broken, severely rusted, or worn spring shackles, spring perches, hangers, u-bolts, or spring clips.

(5) Reject vehicle if the stabilizer bar, caster struts or trailing arms are loose, bent, broken, or severely rusted.

(6) Reject vehicle if the control arms, radius rods, equalizer beam assemblies, beam assemblies, torque rods, struts, track bar or steering arm are loose, broken or bent or rusted to the degree that failure of the component is imminent.

(7) Reject vehicle if any bushings are missing, split, badly deteriorated, or badly extruded from the suspension joints.

(8) Reject vehicle if the shock absorbers or struts leak or have loose or broken mountings, or worn, missing, or defective bushings. Shock absorbers in satisfactory condition should not have more than two cycles of free rocking motion. NOTE* Seepage is not a cause for rejection.

(9) Reject vehicle if the suspension mounting brackets on the vehicle frame are crooked or broken.

(10) Reject vehicle if the torsion bars are broken or improperly adjusted, on vehicles so equipped.

(11) Reject vehicle if the rear axle is bent or not in proper alignment with the longitudinal axis, as determined by a visual inspection.

(12) Reject vehicle if any part of the steering linkage or components have been modified so as to affect the proper steering of the vehicle.

(13) Reject vehicle if the drive shaft universal joints, constant velocity joints, or center bearings show excessive wear or play.

(14) Reject vehicle if the front of the vehicle has been altered or modified to raise or lower the front end by the use of blocks, universal spring shackle extensions, or the improper use of air shocks, spacers, or other similar means.

(15) If an axle was originally manufactured with the leaf springs mounted beneath the axles, reject vehicle if the springs are mounted above the axles.

(16) Reject vehicle if equipped with a suspension system that allows for manually raising or lowering of the vehicle during operation on a public way unless the vehicle was originally equipped by the manufacturer with such suspension.

H. Steering Column

(1) Examine the energy absorbing steering column carefully to determine if there is any evidence of a front-end collision or if a force has been exerted on the steering wheel, steering column, or its components.

(2) Reject vehicle if there is damage to the steering column or components.

(3) Reject vehicle if there is a separation of the mounting capsule from the bracket.

(4) Reject vehicle if there are bulges or bends in the mesh section of the column.

(5) Reject vehicle if the latching mechanism on a tilt steering wheel fails to lock or if there is any play in the tilt mechanism.

I. Wheel Bearings

(1) Reject vehicle if the bearing's end play exceeds the manufacturer's specifications.

(2) Reject vehicle if roughness or noise is evident during wheel rotation.

(3) Reject vehicle if binding or roughness is detected while rotating bearing.

(4) Reject vehicle if the bearing adjustment locking device is missing, not engaged, or not functioning.

J. Vehicle Heights

(1) Frame height limits are based on the manufacturer's gross vehicle weight rating of the vehicle. Heavy-duty springs will not be considered to increase the gross vehicle weight rating over the manufacturers original rating.

(2) Frame end measurement must be taken when the vehicle is parked on a level surface with the vehicle unladed. All tires must be inflated to the manufacturer's recommended tire pressure.

(3) Measurements must be taken from a level surface to the bottom edge of the original manufacturer's frame rail. The frame rail must be measured at the end where the bumper brackets attach. Any frame component or sub-frames added to the vehicle after original manufacture shall be disregarded for purposes of frame height measurements.

(a) Reject vehicle if the frame height exceeds the specifications established in this section.

(4) Maximum frame end heights are established by Maine statute and are restated below;

Type of Vehicle	Front	Rear
Vehicles up to and including 4,500 lbs GVWR	24 inches	26 inches
Vehicles from 4,501 lbs. to 7,501 lbs. GVWR	27 inches	29 inches
Vehicles from 7,501 lbs. to 10,000 lbs. GVWR	28 inches	30 inches

(5) Reject vehicle if the minimum frame end height is less than 10 inches, or less than the frame end height if the vehicle was originally manufactured lower than 10 inches.

(6) Suspension lifts are permitted if they are manufactured by an after market manufacturer, are designed for the make and model vehicle on which they are installed, and if the kit is installed according to the manufacturer's recommendations. The entire kit must be used.

(7) Lowering kits are permitted if they are manufactured by an after market manufacturer, are designed for the make and model vehicle on which they are installed, and if the kit is installed according to the manufacturer's recommendations. The entire kit must be used.

(8) Body lifts are permitted on any vehicle that is not equipped with an anti-lock braking system, provided that they are manufactured by an after market manufacturer, are designed for the make and model vehicle on which they are installed, and the kit is installed according to the manufacturer’s recommendations. Body lifts may not use more than a three-inch spacer.

K. Tires and Wheels

(1) Tires

(a) Tire tread depth shall be measured with a tread depth gauge calibrated in 1/32 inch. Readings shall be taken in accordance with Maine law.

(b) Reject vehicle if any tire is worn to the point where less than 2/32 inch tread design remains at all points where readings are obtained, or where any part of the ply or cord is exposed.

(c) Reject vehicle if any tire has any bump, bulge, or knot, or a shifted or broken belt. Do not reject if a tire has a slight bulge in the sidewall that is the result of the manufacturing process.

(d) Reject vehicle if any tire has tread cuts or snags in excess of 1 inch in any direction or a cut deep enough to expose the tire cords.

(e) Reject vehicle if any tire sidewall has been repaired, or is damaged to the extent that the body cords are damaged.

(f) Reject vehicle if, on the same axle there is a mismatch in nominal size, construction, or profile between tires.

(g) Reject vehicle if it is equipped with studded tires in violation of law.

(h) Reject vehicle if it is a front wheel drive with studded tires only on the front.

(i) Reject vehicle if any tire is marked “off highway use only” or “for racing only.”

(j) Reject vehicle if it is equipped with tires that are in violation of the size restrictions in Title 29-A Section 1917 (see supplement).

NOTE: A tire specification guide or the formula provided in the supplement may be helpful in determining tire diameter and the recommended sizes for a specific vehicle.

(k) Reject vehicle if any tire contacts any portion of the body, the steering components or the frame during normal vehicle operation.

(l) Reject vehicle if radial and bias ply tires are mixed on a vehicle.

(m) Reject vehicle if the load rating of any tire does not meet or exceed the tire load rating specifications or recommendations of the vehicle manufacturer

(2) Wheels

(a) Reject vehicle if any wheel is loose or if there are missing or defective bolts, nuts, or lugs.

(b) Reject vehicle if any wheel is bent, loose, cracked, damaged, or has defective rim or wheel flanges.

(c) Reject vehicle if any parts are designed or installed so that the nuts are not fully engaged.

L. Coupling Devices

(1) Reject vehicle if any attaching bolts, bushings, mounts, or jaw assemblies have any crack, excessive wear points, looseness, or any other condition that may render the fifth wheel assembly or other coupling device unsafe.

(2) Reject vehicle if any fifth wheel or other coupling device has replacement parts not recommended by the manufacturer or not equivalent to factory original.

170.50 CUSTOM VEHICLES AND STREET RODS

1. GENERAL

A. All parts of all vehicles must comply with all laws and rules pertaining to motor vehicle inspections, other than the exemptions noted in this section.

B. Inspection Technicians must examine custom vehicles and street rods for quality of workmanship, integrity of the vehicle components, and the vehicle geometry. If the Inspection Technician believes, based upon training and experience, that the strength or safety of any component of a street rod or custom vehicle is insufficient, they must not issue an inspection sticker.

2. REGULATIONS AND EXEMPTIONS FOR CUSTOM VEHICLES

A. Glazing:

(1) The windshield must be of approved safety glass.

(2) The glazing must allow the operator a clear and undistorted view directly ahead and to the right and left of the axis of the vehicle. The vertical height of the windshield must be at least 7 inches.

(3) If the body of the custom vehicle was originally constructed without rear windows, then rear windows are not required.

(4) A custom vehicle may be modified to remove the rear window. If the rear window is removed, there must be a sufficient number of mirrors to afford a clear view to the sides and rear of the vehicle. The vehicle shall not be inspected if the rear window is removed and not replaced with material to block the rear window opening.

(5) Custom vehicles are not required to have sun visors, but if they are present, they must be secure and able to stay in the upright position when not in use.

B. Exhaust System

(1) A custom vehicle shall be equipped with an exhaust system that is free of leaks including the exhaust manifolds (including headers), the piping leading from the flange of the exhaust manifold(s), the muffler(s) and the tail piping.

(2) Exhaust systems shall discharge exhaust fumes at a location to the rear of the vehicle body or direct the exhaust fumes outward from the side of the vehicle body at a location rearward of any operable side windows.

(3) No part of the exhaust system shall pass through any part of the vehicle that is used as a passenger-carrying compartment.

C. Body and Structure

(1) Bumpers – Custom vehicles are exempt from bumper requirements. If a custom vehicle is equipped with a bumper it must be securely attached and so constructed that it does not pose a safety hazard to occupants, pedestrians, cyclists or other vehicles.

(2) Fenders - Custom vehicles must be equipped with fenders or fender and extensions to provide coverage of the exposed tire tread.

(3) Floor Pan - A floor pan must be in sound condition and completely free of cracks, holes, open seams, or other openings that would allow exhaust fumes to enter the passenger or operator compartments.

(4) Gas Tank - Gas tanks must be of the type originally manufactured as a motor vehicle gas tank.

(5) Rear Engine Driven Vehicles - Rear engine driven vehicles must have metal or fiberglass shrouds covering exposed exhaust pipes and drive belts.

(6) Windshield Wipers: Custom vehicles are exempt from sections 170(8)(A)(1)-(7) of this Chapter regarding windshield wipers. However, a custom vehicle must have adequate windshield wiper(s) to effectively clear the windshield, and the wipers must be working properly.

(7) Custom vehicles are exempt from the battery location requirement under section 170(5)(A), provided that the battery is properly secured and adequately vented.

D. Tires and Suspensions

(1) Custom vehicles are exempt from the portions of this Chapter regarding tires, except that no tire may contact any portion of the body, the steering components, or the frame during normal vehicle operations. All tires must be DOT approved

and must fit entirely within the body or fenders of the vehicle so that no portion of the tire tread is exposed. Tires must meet the requirements in Title 29-A Section 1917 (see supplement).

(2) Custom vehicles are exempt from the portions of this Chapter regarding minimum frame height requirements, but a custom vehicle must meet the following standard regarding vehicle height:

i. The scrub line of the vehicle shall not be lower than three (3) inches from a level surface.

ii. No portion of a vehicle component may extend below the scrub line. This includes any portion of the suspension system; exhaust system, frame, hoses or other part except body trim or molding.

iii. For purposes of measurement, the scrub line must be measured with the vehicle on a flat level surface, with full weight resting on the tires. The scrub line may be measured using any two tires.

3. REGULATIONS AND EXEMPTIONS FOR STREET RODS

A. A street rod engine must be front-mounted, unless the vehicle was originally manufactured with a rear engine.

B. Glazing:

(1) The windshield must be of approved safety glass.

(2) The glazing must allow the operator a clear and undistorted view directly ahead and to the right and left of the axis of the vehicle. The vertical height of the windshield must be at least 7 inches

(3) If the body of the street rod was originally constructed without rear windows, then rear windows are not required.

(4) A street rod may be modified to remove the rear window. If the rear window is removed, there must be a sufficient number of mirrors to afford a clear view to the sides and rear of the vehicle. The vehicle shall not be inspected if the rear window is removed and not replaced with material to block the rear window opening.

(5) Street rods are not required to have sun visors, but if they are present, they must be secure and able to stay in the upright position when not in use.

C. Exhaust System

(1) A street rod shall be equipped with an exhaust system that is intact and that does not have any leaks. The exhaust system includes the exhaust manifolds (including headers), the piping leading from the flange of the exhaust manifold(s), the muffler(s) and the tail piping.

(2) Exhaust systems shall discharge exhaust fumes at a location to the rear of the vehicle body or direct the exhaust fumes outward from the side of the vehicle body at a location rearward of any operable side windows.

(3) No part of the exhaust system shall pass through any part of the vehicle that is used as a passenger-carrying compartment.

D. Body

(1) Bumpers: Street rods are exempt from the requirement to have bumpers.

(2) Fenders: Street rods are exempt from the requirement to have fenders.

(3) Floor Pan; Street rods must have a floor pan that is solid and completely free of cracks, holes, open seams, or other openings that would allow exhaust fumes to enter the passenger compartment.

(4) Gas Tank; Gas tanks must be of the type originally manufactured as a motor vehicle gas tank.

(5) Rear Engine Driven Vehicles; Rear engine driven vehicles must have metal or fiberglass shrouds covering exposed exhaust pipes and drive belts.

(6) Frame heights; Street rods are exempt from the minimum frame height requirements.

(7) Windshield Wipers: Street Rods are exempt from sections 170(8)(A)(1)-(7) of this Chapter regarding windshield wipers. However, a Street Rod must have adequate windshield wiper(s) to effectively clear the windshield, and the wipers must be working properly.

(8) Hoods: Street Rods are exempt from having hoods.

(9) Street Rods are exempt from the battery location requirement under section 170(5)(A), provided that the battery is properly secured and adequately vented.

E. Tires

1) Street Rods are exempt from the portions of this Chapter regarding tires, except that no tire may contact any portion of the body, the steering components, or the frame during normal vehicle operations. All tires must be DOT approved. Tires must meet the requirements in Title 29-A Section 1917 (see supplement).

16 DEPARTMENT OF PUBLIC SAFETY

222 BUREAU OF STATE POLICE

SECTION 180: CLASS B SCHOOL BUS INSPECTION STANDARDS

SUMMARY: This section describes the inspection procedures and standards for Class B school buses. This section also establishes the standards for rejecting a Class B vehicle for inspection.

180.05 GENERAL PROVISIONS

1. All school buses must undergo a complete Class D inspection of all parts and accessories necessary for safe operation of the school bus. Any exceptions or exemptions to the Class D requirements are noted in this section.
2. All school buses must be inspected for additional specific inspection items noted in this section.
3. Reject vehicle does not equal out of service. Out of service criteria is provided in the supplemental information in the rear of this manual.

180.10 CLASS B SCHOOL BUS INSPECTION STANDARDS

1. SCHOOL BUS BODY AND EXTERIOR

   A. EXHAUST SYSTEM

      (1) Reject vehicle if the exhaust pipe expels exhaust under the body of the bus.

      (2) Reject vehicle if the exhaust pipe terminates more than 2 inches beyond the outside perimeter of the body or rear bumper or terminates inside of the perimeter of the body.

      (3) Reject vehicle if, on a commercially operated school bus, the exhaust pipe terminates other than to the rear of the bus.

      (4) Reject vehicle if, on a non-commercially operated school bus, the exhaust pipe terminates other than to the rear or to the left side of the bus. If the exhaust pipe terminates on the left side of the bus, it must terminate no more than 18 inches forward of the front edge of the rear wheel well.

      (5) Reject vehicle if the exhaust pipe terminates on the right side of the bus.

      (6) Reject vehicle if, on a type C or D bus, the tailpipe exits beneath a fuel fill or emergency door.

B. HOOD OR REAR MOUNTED ENGINE COMPARTMENT DOOR

(1) Reject vehicle if the hood or engine cover is missing.

(2) Reject vehicle if any latch is broken, missing, seized, not securely mounted, or inoperable.

(3) Reject vehicle if any support rod is missing, broken, or bent.

(4) Reject vehicle if the hinge mount area of the body is severely corroded.

(5) Reject vehicle if any safety cable (if the vehicle was originally so equipped) is broken, missing, or not securely attached.

(6) Reject vehicle if any hinge is cracked, missing, broken, or is excessively worn.

(7) Reject vehicle if any secondary latch (if applicable) is broken, missing, or inoperable.

C. BODY

(1) Reject vehicle if torn metal protrudes so as to be hazardous to passengers, pedestrians, or cyclists.

(2) Reject vehicle if the molding is loose or protrudes so as to be hazardous to passengers, pedestrians, or cyclists.

(3) Reject vehicle if any side panel is perforated, any rivets are missing or loose, or corrosion has resulted in weakening of the panel.

(4) Reject vehicle if any fenders are missing.

(5) Reject vehicle if any exterior rub rail is missing, damaged, loose, or has rivets missing.

(6) Reject vehicle if one rub rail is not approximately at seat cushion height.

(7) Reject vehicle if any body-to-chassis fasteners are damaged, loose or missing.

(8) Reject vehicle if there are any holes in body of vehicle that could allow exhaust gases into the passenger compartment.

D. FRONT AND REAR BUMPERS

(1) Reject vehicle if any bumper is loose, missing, or broken.

(2) Reject vehicle if any torn portion of a bumper protrudes so as to be hazardous to passengers, pedestrians, or cyclists.

(3) Reject vehicle if the bumper design is other than a design provided by the original equipment manufacturer.

(4) Reject vehicle if any fender or bumper mounts are loose, missing, or broken.

(5) Reject vehicle if there are any holes cut into the bumper or if the bumper has been altered from original (e.g.: reject vehicle if the bumper has been altered to provide a step or for exhaust).

E. BODY COLORS

(1) Reject vehicle if the body is not painted national school bus glossy yellow. The hood may be a lusterless black. The roof may be white.

(2) Reject vehicle if the bumpers are not a glossy black, unless painting is impracticable through use of rubber, retro reflective material or other devices.

(3) These requirements do not apply to "Allowable Alternative Vehicles", as defined in Maine applicable statute.

F. SCHOOL BUS SIGNS AND LETTERING

(1) Reject vehicle if the "School Bus" sign is not retro-reflective material or lighted.

(2) Reject vehicle if the "School Bus" sign is not displayed on the front and rear.

(3) Reject vehicle if the "School Bus" sign is not black on a yellow background.

(4) Reject vehicle if the "School Bus" sign is not as high as practical on a vertical plane.

(5) Reject vehicle if the "School Bus" sign lettering is not at least 8 inches high and 1.25 inches in width.

(6) Reject vehicle if lettering on the bus body is not black on a yellow background, or white on a black background if a black background is permitted.

(7) Reject vehicle if all emergency exits are not labeled on top of the inside and outside of the exits in accordance with Department of Education Rules.

(8) Reject vehicle if the "Emergency Door" sign is not identified on both the inside and the outside in black or red letters at least 2 inches high.

(9) Reject vehicle if there are any graphics or lettering on the exterior of a bus that do not comply with requirements set forth by Title 29-A MRSA and Department of Education rules.

(10) Numbers 1-6 of this subsection do not apply to "Allowable Alternative Vehicles", as defined in Title 29-A.

G. MIRRORS

(1) Interior Rear View Mirrors

(a) Reject vehicle if the rearview mirror is missing.

(b) Reject vehicle if the rearview mirror is cracked, broken, obscured, or if the mirror surface is peeling, pitting, or covered with any item that prevents complete viewing (i.e., sticker or pictures).

(c) Reject vehicle if the rearview mirror will not maintain a fixed position when adjusted.

(2) Exterior Rear View and Cross-over Mirrors

(a) Reject vehicle if any mirror required by rule or law is missing.

(b) Reject vehicle if any mirror is obstructed, does not provide a clear view of the highway to the rear, or does not provide a clear view of the front hood line to the ground, and the bus sides in the front wheel and loading areas.

(c) Reject vehicle if any mirror mount is not secure, is loose, or protrudes excessively.

(d) Reject vehicle if the glass or other reflective material is cracked, pitted, or clouded to the extent that clear vision is obscured.

(e) Reject vehicle if any exterior rear view mirror does not have 50 square inches of mirror glass or reflective material.

(f) Reject vehicle if any mirror cannot be adjusted or do not maintain a fixed position.

H. AUXILIARY COMPARTMENTS

(1) Reject vehicle if all access doors will not open or close, a latch will not hold, or if the hinges are damaged.

(2) Reject vehicle if compartment is not structurally sound.

(3) Reject vehicle if any counter-balance cable on baggage doors is frayed.

(4) Reject vehicle if any overhead rack or shelf is not securely mounted, the retaining components are missing, broken or mounted insecurely, or if the energy absorbing material on the rack or shelf is missing.

2. STOP LAMPS, ARMS, AND WARNINGS

A. SCHOOL BUS STOP AND WARNING LAMPS

Running lights must pass the Class D inspection standards.

Reject vehicle if the vehicle was originally equipped with a back-up alarm, and the alarm does not function properly.

The following requirements only apply to vehicles that are not allowable alternative vehicles;

(a) Reject vehicle if any school bus stop or warning lamp does not operate or does not alternate or strobe properly.

(b) Reject vehicle if any stop lamp is not red and any warning lamp is not amber. Roof mounted strobe lights may be red or white.

(c) Reject vehicle if the eight-way warning lamps are less than 5 inches in diameter. Reject vehicle if four-way red lights do not activate automatically when opening service door.

(d) Reject vehicle if the manual activation switch for 8-way warning lamps is inoperable.

B. SCHOOL BUS STOP ARMS

(1) Reject vehicle if the stop arm fails to operate per OEM design.

(2) Reject vehicle if the stop arm lamps fail to operate per OEM design.

(3) Reject vehicle if the stop arm lamps are not red.

(4) Reject vehicle if manufactured after September 1992 and not equipped with a stop arm.

(5) Reject vehicle if the lamps do not operate per OEM design.

(6) Reject vehicle if stop arm does not activate automatically with red lights when opening service door.

(7) Numbers 1-6 of this requirement do not apply to "Allowable Alternative Vehicles," as defined in Title 29-A

C. CROSSING ARMS *(If Equipped)*

(1) Reject vehicle if crossing arm doesn't fully extend, fully retract to park position, or if manual override switch fails to operate.

(2) Reject vehicle if crossing arm does not activate with reds when opening service door.

(3) Reject vehicle if the crossing arm is damaged or bent so as to shorten the extended length to less than 60 inches.

3. DOORS, WINDOWS AND EXITS

A. STEP WELL (ENTRANCE AND EXIT STEPS)

(1) Reject vehicle if the step well is unsafe due to corrosion.

(2) Reject vehicle if step well area is cluttered or blocked.

(3) Reject vehicle if the step risers are loose.

(4) Reject vehicle if the anti-slip material is missing, loose, or is worn smooth.

(5) Reject vehicle if the step well area has been modified from OEM design.

(6) Reject vehicle if step well light does not function.

B. SERVICE DOOR AND EXIT DOOR

(1) Reject vehicle if binding is evident, jamming occurs, or the remote control door malfunctions.

(2) Reject vehicle if the override device on a power-operated door does not operate or the control is not accessible to the driver.

(3) Reject vehicle if the door edge material is other than a flexible type.

(4) Reject vehicle if the strip seal along the bottom edge of the door is missing, torn, or does not seal properly.

(5) Reject vehicle if there are loose objects, magnets, decals, or pictures in entrance area. (Exception: Decals that are relevant to pupil transportation or AAV transportation service).

(6) Reject vehicle if glass is missing or broken, fogged or discolored such that the driver's view through any glass door panel is obstructed.

(7) Reject vehicle if the glass in the door is not double paned. (Type A buses are excepted from this criterion).

(8) Reject vehicle if there is moisture inside the double paned glass.

C. EMERGENCY DOOR OR EXIT

(1) Reject vehicle if the passage is blocked or restricted.

(2) Reject vehicle if the aisle is less than 12 inches wide.

(3) Reject vehicle if, on a wheelchair-equipped bus, the aisle is less than 30 inches wide from the wheel chair tie-down position to the lift door and at least one emergency door..

(4) Reject vehicle if the release mechanism fails to function from both inside and outside, has an improper latch, or fails to latch securely when closed. (Side push out windows need only to open from the inside).

(5) Reject vehicle if the emergency door or exit warning device fails to operate.

(6) Reject vehicle if two methods of escape are not present; one of which must be on the left side of the bus or to the rear of the vehicle.

(7) Reject vehicle if the head impact protection located across the top of the door header is missing or damaged.

(8) Reject vehicle if the roof hatch is missing or inoperable on school buses manufactured after January 1998, or on any other bus equipped with a roof hatch.

(9) Reject vehicle if the doors or exits are not as prescribed in the FMVSS based on bus type, year and capacity.

(10) Reject vehicle if the protective padding across inside top of door opening is missing, not fastened securely or damaged.

D. WINDOWS

1) Reject the vehicle if any emergency, side or driver's window cannot be opened or closed readily as designed.

2) Reject vehicle if either the driver's side window or the first passenger's window on the right side of the bus is not made of double paned glass. (This criterion does not apply to type A buses).

3) Reject vehicle if there is moisture, fogging or discoloration inside a double paned glass to the point that the driver's view through glass is obstructed.

4) Reject vehicle if the side windows are comprised of a material other than safety glass AS-1, AS-2, AS-3, AS-10 and AS-11.

5) Reject vehicle if the side windows are broken, have exposed sharp edges, or if exposed edges are not banded.

6) Reject vehicle if the bus was manufactured after May 30, 2002 and the side windows are tinted so that less than 28% of the light passes through the glass unless a waiver has been granted by the Maine State Police due to a bona fide medical condition.

7) Reject vehicle if any additional tint is on the windshield (only the tint from the factory is permissible).

8) Reject vehicle if the bus was manufactured after May 30, 2002 and the entrance door, or driver's side window are tinted so that less than 80% of the light passes through the glass.

9) Reject vehicle if the rear window that goes across the back of the bus is tinted so less than 50% of the light passes through the glass.

E. PASSENGER VEHICLES FOR THE PHYSICALLY DISABLED

(1) Reject vehicle if the ramp, if the vehicle is so equipped, is not securely attached or if the fasteners are missing, broken, have holes in them or are inoperable.

(2) Reject vehicle if the power lift, if the vehicle is so equipped, is inoperable or not securely attached.

(3) Reject vehicle if the power controls are not operable or the lift does not respond to the controls.

(4) Reject vehicle if the wheelchair hold-downs are not operable, the pins are worn, the cables or belts are broken or frayed, or do not operate per OEM design, or if floor installed latch plates, tracks or tie downs are loose, badly worn, damaged or inoperable.

(5) For each wheelchair position, reject vehicle if the safety lap and shoulder belts are missing, torn or frayed, or if the buckles are not operable.

(6) Reject vehicle if the lift cannot be manually operated.

(7) Reject vehicle if any assistive or support equipment is not secured or cannot be secured during transport.

(8) Reject vehicle if the lift has been removed and if the door has not been either converted to meet all of the requirements of an emergency exit or if the exit has not been sealed, with all exit identification removed except inside and outside signage to indicate that “THIS IS NOT AN EXIT” using two-inch lettering black on yellow background (black on white background for AAV).

(9) Reject vehicle if all wheel chair positions are not forward facing.

(10) Reject vehicle if not equipped with transmission interlock as required by FMVSS 403 and 404.

4. SEATS AND FLOOR

A. DRIVER’S SEAT AND SAFETY BELT

(1) Reject vehicle if the driver’s seat is loose, the frame of the seat is broken, the springs are exposed or broken, or if the seat cover material is removed.

(2) Reject vehicle if the driver’s seat adjusting mechanisms do not operate or will not lock in position.

(3) Reject vehicle if the originally manufactured driver's safety belt or its equivalent replacement is not present.

(4) Reject vehicle if any safety belt has torn or frayed webbing, is not securely mounted or the buckle is inoperable.

(5) Reject vehicle if either the retractors fail to retract or allow the safety belt to extend to its maximum length, or if they are inoperable or damaged.

(6) Reject vehicle if driver's seat has been replaced with a seat other than a seat that is designed for school buses and does not have the appropriate head impact back.

(7) Reject vehicle if a seat belt cutter is not in reach of driver when the driver is in the normal driving position with seat belts worn.

B. PASSENGER SEATS AND GENERAL INTERIOR

(1) Reject vehicle if any seat frame is loose or broken.

(2) Reject vehicle if any seat frame does not face the front of the bus.

(3) Reject vehicle if the seat covering is torn so that the seat base or frame is exposed or if there are holes in any part of the seat.

(4) Reject vehicle if the seat backs are missing, loose or damaged.

(5) Reject vehicle if the energy absorbing material on any seat back is missing in an area more than 3 square inches and more than ¼ inch deep.

(6) Reject vehicle if any safety belts (if originally so equipped) are missing, have torn or frayed webbing, are not securely mounted or if the buckle is inoperable.

(7) Reject vehicle if any seat that does not comply with FMVSS 210 has been equipped with a safety belt.

(8) Reject vehicle if any child restraint systems are not properly installed per OEM instructions.

(9) Reject vehicle if any safety seat belts are installed on other than a manufacturer certified seat belt ready seat frame. (Reference Federal Motor Vehicle Safety Standard 210).

(10) Reject vehicle if any installed Child Safety Restraint System does not have a registration and use instruction tag/label or is

not installed per OEM instructions (In accordance with Federal Motor Vehicle Safety Standard 213).

C. FLOOR

(1) Reject vehicle if the floor is buckled, rusted, or rotted to the point of causing a hazard or allowing exhaust gases to enter the passenger compartment.

(2) Reject vehicle if the floor covering or trim is cracked, curled, worn, not sealed (waterproof) at the seams, or presents a tripping hazard.

(3) Reject vehicle if the sub-floor is not at least 5/8-inch plywood (except type A which may be ½ inch plywood).

(4) Reject vehicle if a hole in the floor is not sealed (i.e.; air line or bolt holes that are not in use).

5. INTERIOR EQUIPMENT AND ACCESSORIES

A. GENERAL INTERIOR

(1) Reject vehicle if there are loose objects, decals, magnets, or pictures in driver and passenger compartment.

(2) Reject vehicle if hooks or other after market accessories have been added that could cause a head impact injury to bus occupants in a collision.

(3) Reject vehicle if the compartment stanchions are loose or support bolts are missing or they were installed contrary to the FMVSS in effect at the time of manufacture.

(4) Reject vehicle if any guardrails are loose or support bolts are missing.

(5) Reject vehicle if either the service entrance handrail is missing or loose, or if it fails the nut-drawstring test or if the handrail is not in compliance due to a manufacturer’s recall.

(6) Reject vehicle if any interior metal is torn or corroded so as to create a hazard.

(7) Reject vehicle if the retaining barrier is missing or not within 24 inches of clear space in front of seat.

(8) Reject vehicle if there are any unsecured objects in the interior of the bus (e.g., brooms, trashcans, or chock blocks).

(9) Reject vehicle if head impact padding above service door is damaged, missing, or altered.

B. INTERIOR EQUIPMENT

(1) Windshield Defroster

(a) Reject vehicle if the fan fails to operate.

(b) Reject vehicle if there is no airflow.

(c) Reject vehicle if there is no defrost heat/temp control.

(2) Interior Heaters

(a) Reject vehicle if the fan fails to function properly.

(b) Reject vehicle if the interior heater fails to function properly.

(3) Dash Instruments and Indicators

(a) Reject vehicle if the horn activating mechanism has been altered from OEM design, the button position is not identified, or if the device does not function as intended.

(b) Reject vehicle if the horn is not clearly audible or does not operate.

(c) Reject vehicle if the speedometer fails to operate.

(d) Reject vehicle if the brake-warning indicator, ABS indicator, high beam indicator, turn signal indicator or hazard indicator lamps fail to operate.

(e) Reject vehicle if any of the following gauges or indicators are present but fail to operate; water temperature gauge, oil pressure gauge, ammeter, fuel gauge, vacuum gauge, or air pressure gauge.

C. OTHER INTERIOR ACCESSORIES

(1) Fire Extinguisher

(a) Reject vehicle if the fire extinguisher is missing or damaged.

(b) Reject vehicle if accessibility to the fire extinguisher is obstructed.

(c) Reject vehicle if the fire extinguisher rating is less than 10-B:C and at least 5 pounds.

(d) Reject vehicle if the mount is not secure, if the extinguisher is not in a quick release holder, or if it is not labeled appropriately in driver's area. There must be at least one fire extinguisher in the driver's area.

(e) Reject vehicle if the fire extinguisher is equipped with a seal, and the seal is broken or not in place.

(f) Reject vehicle if the fire extinguisher is equipped with a gauge, and the charge reading is less than the minimum, indicates "recharge", or is out of the normal range.

(f) Reject vehicle if the extinguisher is not Fire Marshal (FM) or Underwriters Lab (UL) approved and labeled, if it has no nameplate or instructions, or does not have a current (annual) certified agency inspection tag showing the date of inspection and initialed by a school employee every 30 days.

(h) Reject vehicle if any extinguisher, when inverted, the powder cannot be felt shifting freely.

(i) Reject vehicle if the nozzle is deteriorated, clogged, or corroded to the point of affecting the normal operation of the extinguisher.

(2) Hazard Warning Kit

(a) Reject vehicle if the hazard warning kit is missing or the container is not secure, the kit does not contain three reflectors, or if the kit does not have advanced warning triangles (with stands) that are at least 7 inches high, with sides 17 to 22 inches long, and reflectors or electric lanterns.

(b) Reject vehicle if it does not have 2 chock blocks or if the chock blocks are not secured.

(3) First Aid and Biohazard Kits

(a) Reject vehicle if either the first aid or biohazard kit is missing.

(b) Reject vehicle if the first aid or biohazard kit is not secured or it location is not labeled in view of the driver.

16 DEPARTMENT OF PUBLIC SAFETY

222 BUREAU OF STATE POLICE

SECTION 190: CLASS C MOTORCYCLE INSPECTION STANDARDS

SUMMARY: This section describes the inspection procedures and standards for Class C motorcycle. This section also establishes the standards for rejecting a Class C motorcycle for inspection.

190.05 CLASS C MOTORCYCLE INSPECTION

1. BRAKES.

A. GENERAL

(1) Wheels and drums are not required to be removed from the vehicle being inspected to determine the condition of the brake drums and linings unless the Inspection Technician believes, based upon training and experience, that there is a problem or failure with the brakes and advises the customer that the vehicle cannot be passed for inspection without the removal of wheel(s) or drum(s) to allow further assessment so as to determine whether the vehicle may be passed for inspection.

(2) At the customer's request, and with the clear understanding by the customer that pulling the wheel or drum is not part of the inspection and will be considered as labor at the hourly rate, the Inspection Technician may remove the wheel(s) and/or drum(s) to show the customer why the vehicle will not pass inspection.

(3) Whenever an Inspection Technician feels that a road test of the motorcycle is necessary to ascertain braking efficiency or safe handling characteristics, a road test may be completed before an inspection sticker is issued.

(5) Motorcycles equipped with self-proportioning or anti-lock brakes may have a single brake control operated by the right hand or foot.

(6) Anti-lock braking systems cannot be disconnected.

B. BRAKE SYSTEM TEST PROCEDURES

(1) Brake Hydraulic System Test: The Inspection Technician must be able to maintain brake pedal or hand lever reserve under moderate pressure (40- 60 lbs.) for one minute.

(a) Reject vehicle if the brake reserve cannot be maintained for one minute.

(2) Pedal Reserve - Hydraulic System Test: Test vehicle in a standing position with the brake pedal or hand lever depressed under moderate force (40- 60 lbs.) There must be a minimum of approximately 1/3 of the total available pedal or hand lever travel remaining.

(a) Reject vehicle if less than approximately 1/3 of the total available pedal or brake lever travel remains when the pedal is depressed under moderate force.

(3) Service Brake Test: Test vehicle on a substantially level, dry, smooth, hard surfaced road or area that is free from loose materials, oil, or grease. Using the service brake only, test the stopping ability of the vehicle. Brake tests on the open highways must be at a speed of 20 mph with the cycle stopping safely within a distance of 30 feet.

(a) Reject vehicle if it does not stop safely within 30 feet at 20 mph.

C. INSPECTION OF INTERNAL MECHANISM

(1) Brake Linings and Disc Brake Pads

(a) Reject vehicle if the thickness of bonded brake linings, when measured at the thinnest point, is less than 2/32 inch.

(b) Reject vehicle if any wire in a wire-backed lining is visible in the friction surface.

(c) Reject vehicle if any riveted lining is worn to within 2/32 inch of the rivet head.

(d) Reject vehicle if any rivet is loose or missing or if the lining is not securely fastened.

(c) Reject vehicle if the lining is broken, cracked or loose.

(d) Reject vehicle if the lining is contaminated with oil, grease, or brake fluid.

(e) Reject vehicle if any lining is worn beyond the replacement indicators.

(2) Brake Drums and Brake Discs

(a) Reject vehicle if any brake drum or disc is contaminated.

(b) Reject vehicle if any brake drum has one or more cracks extending to the edge of the drum or disc or mechanical damage to the friction surface other than wear.

(c) Reject vehicle if any brake drum is re-machined beyond the manufacturer's specifications.

(d) Reject vehicle if there are any cracks extending to the edge of the drum or disc.

(e) Reject vehicle if the thickness of any disc is less than the minimum thickness recommended by the manufacturer.

(3) Hydraulic System

(a) Reject vehicle if the fluid level in the master cylinder reservoir is below ¾ full.

(b) Reject vehicle if there are leaks at the master cylinder or wheel cylinders.

(c) Reject vehicle if any hydraulic hose, tubing or connection is leaking, chafed, restricted, crimped, cracked, or broken.

(4) Mechanical Linkage

(a) Reject vehicle if any mechanical part is missing, broken, or badly worn.

(b) Reject vehicle if there is high friction in the pedal, lever or linkage in the brake components.

(c) Reject vehicle if any brake operating lever or pedal is improperly positioned or is misaligned.

(d) Reject vehicle if any brake cable has more than one strand of the cable broken, cut or missing.

(e) Reject vehicle if any portion of the hand brake lever is broken or missing.

(f) Reject vehicle if any cam-operating lever has been repositioned on the shaft as a means of avoiding replacement of a worn cam, shoe, or lining.

(g) Reject vehicle if the brake adjuster is not equipped with a locking mechanism.

(h) Reject vehicle if any brake cable is so routed as to become pinched between the fork and the frame.

(i) Reject vehicle if the brake control/lever has no free play or if less than 1/5 of the total available control travel remains when the brake is fully applied.

(j) Reject vehicle if there is any modification that makes the brake pedal or lever inaccessible for adequate leverage or safe operation.

(k) Reject vehicle if any replacement or modification to the brake assembly is not equal to the manufacturer's specifications for the specific motorcycle on which the replacement or modification has been installed.

(5) Parking Brake System

(a) Reject vehicle if a three-wheeled motorcycle or autocycle is not equipped with a parking brake in working condition. This brake may be the primary hydraulic brake system, provided that there is a mechanical means to hold the brake lever or pedal applied.

2. BODY COMPONENTS

A. CHAIN/BELT, SPROCKET, AND GUARDS

(1) Reject vehicle if the chain links or rollers are damaged or any pins are loose.

(2) Reject vehicle if the rear chain adjustment is not in accordance with the manufacturer's specifications.

(3) Reject vehicle if the sprocket belt is frayed or if the teeth are stripped.

(4) Reject vehicle if the sprocket teeth are bent or missing.

(5) Reject vehicle if the rear sprocket is loose, missing bolts, or is cracked.

(6) Reject vehicle if the chain guard is broken or missing.

(7) Reject vehicle if the chain guard is not securely mounted or is not mounted in such a way that provides shielding from the chain.

B. DRIVE SHAFT

(1) Reject vehicle if the drive shaft is leaking fluid.

C. FENDERS

(1) Reject vehicle if a fender is missing from any wheel.

(2) Reject vehicle if any fender is not mounted securely.

(3) Reject vehicle if any fender, exterior fiberglass or sheet metal part, or molding has sharp or broken edges, or if it has an abnormal protrusion extending beyond the normal vehicle extremities that would be hazardous to driver, passenger, pedestrian or other vehicles. Do not reject for crash bars unless the bars have sharp protrusions.

(4) Reject vehicle if any fender fails to cover the width of the tire.

(5) Reject vehicle if a fender does not cover a minimum of ¼ of the wheel circumference and is positioned so as to protect the operator and passenger from an exposed wheel.

(6) Reject vehicle if a replacement fender has not been refitted with a required lighting device.

D. STANDS

(1) Reject vehicle if the center or side stands do not operate properly.

(2) Reject vehicle if the motorcycle does not remain on the stand when the front wheel is turned from stop to stop.

(3) Reject vehicle if either stand is cracked or broken.

(4) Reject vehicle if the stand will not retract or remain in a fully retracted or stored position.

E. SEATS

(1) Reject vehicle if it is not equipped with seats.

(2) Reject vehicle if any seat is not securely attached.

(3) Reject vehicle if any seat has springs or other parts protruding which might constitute a hazard to the operator or passenger.

(4) Reject vehicle if any seat latching or securing device does not function properly.

F. FOOTRESTS

(1) Reject vehicle if footrests are not provided for each designated seating position.

(2) Reject vehicle if the footrests are not in an accessible position for a passenger's feet.

(3) Reject vehicle if any footrest is not securely attached.

(4) Reject vehicle if any footrest does not fold upward or rearward when not in use.

G. OTHER ACCESSORIES/ SPEEDOMETERS

(1) For the purposes of this subsection, accessories include, but are not limited to, items such as; fairings, windshields, luggage racks and carriers, backrests, highway bars, engine case guards, passenger seats, speedometers/odometers, and trailer hitches. If the motorcycle was originally equipped with a speedometer, it must be present and functioning properly.

(2) Reject vehicle if any accessory interferes with, obstructs or prevents the proper use of any control, component or system required for the operation of the vehicle.

(3) Reject vehicle if any accessory item covers, interferes with, or obstructs any required lighting device, reflector, or registration plate.

(4) Reject vehicle if any accessory has sharp edges, points, or breaks that may present a hazard to a driver, passenger, or pedestrian.

(5) Reject vehicle if any passenger handhold, if vehicle is so equipped, is not securely attached.

(6) Reject vehicle if an installed windscreen is cracked, discolored or scratched so as to obstruct the driver's forward vision.

(7) Reject vehicle if the glazing in an installed windscreen is not of an approved type.

(8) Reject vehicle if an installed windscreen obstructs or obscures the driver's view of the road surface directly ahead of the front wheel.

(9) Reject vehicle if any attaching bracket, clamps, bolt, brace or other similar fastening device anywhere on the motor body is loose, broken, or in other than a safe condition.

3. FRAME

A. Reject vehicle if any part of the frame has been removed so as to weaken the original structure.

B. Reject vehicle if the frame is cracked, broken, or twisted, or if there is evidence of structural damage.

C. Reject vehicle if any weld or joint shows cracks or fatigue breaks.

D. Reject vehicle if the frame is out of alignment.

E. Reject vehicle if it fails to meet the following specifications (Table 190.1) in relationship to the front wheel geometry:

Table 190.1

Maximum rake: 45 degrees
Maximum trail: 14 inches
Positive

Minimum rake: 20 degrees
Minimum trail: 2 inches
Positive (2 wheeled cycles
Only)

Motorcycle Front End Geometry

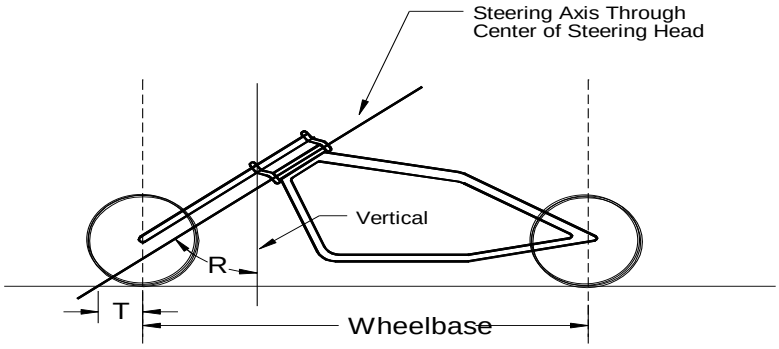

R = Rake (Angle measured in Degrees)
T = Trail (Measured in Inches)

4. STEERING AND SUSPENSION

A. FRONT FORK

(1) Reject vehicle if any fork component is loose or shows any perceptible wear.

(2) Reject vehicle if “fork slugs” have been installed.

(3) Reject vehicle if the length of the original fork has been extended by replacing the original tubes with tubes longer than 16 inches or if the vehicle exceeds the rake and trail limits.

(4) Reject vehicle if springer-type front forks exceed the original design by 18 inches or more.

B. SWING ARM

(1) Reject vehicle if the swing arm, if vehicle is so equipped, is bent, cracked, broken or loose, or is excessively worn so as to affect the safe handling of the vehicle.

C. HEAD, STEERING HEAD BEARINGS AND WHEEL BEARINGS

(1) Reject vehicle if there is noticeable play or roughness within the steering head bearings or if the front fork binds when turned left or right.

(2) Reject vehicle if the wheel bearings have perceptible play, roughness, or binding during wheel rotation.

(3) Reject vehicle if the steering head has cracks in or adjacent to any weld.

D. SHOCK ABSORBERS AND SUSPENSION

(1) Reject vehicle if any shock absorber is not securely attached or are missing.

(2) Reject vehicle if any shock absorber has been removed and replaced with a solid connection.

(3) Reject vehicle if any shock absorber is worn, leaking, bent, or has damaged parts.

(4) Reject vehicle if any suspension spring is broken, worn, or loose.

(5) Reject vehicle if a hard tail frame is not of a type manufactured completely as a hard tail. A bolt-on/ weld-on type is not acceptable. This criterion does not apply to 3-wheeled vehicles.

E. HANDLEBARS

(1) Reject vehicle if the handlebars are cracked, broken, or misaligned.

(2) Reject vehicle if the handlebars are positioned so that the handgrips are at a level above the operator's shoulder height when the operator is sitting astride the seat, or if the handgrips are positioned such that the vertical rise is more than 15 inches above the surface of the operator's seat. A motorcycle must meet the lesser of these two values.

(3) Reject vehicle if the handlebar width measures either less than 18 inches or more than 36 inches from grip end to grip end.

(4) Reject vehicle if the handlebars are loose, bent, or cracked in any welds or bends, or if the handlebars have been broken and then welded or brazed.

(5) Reject vehicle if a replacement handlebar is not of the same gauge steel and strength as the original handlebars.

(6) Reject vehicle if the handlebars can be moved up or down by applying manual force other than the movement related to the shock absorbing mounts of the handlebar supports.

(7) Reject vehicle if the handlebars are not equipped with handgrips.

F. HANDLEBAR CONTROLS

(1) Reject vehicle if the throttle does not automatically close to an idle when it is released from the full open position on motorcycles manufactured after September 1, 1974. (Note: Some throttles have an intermediate resistance point for idle adjustment).

(2) Reject vehicle if any throttle or control lever is loose on the handlebars.

(3) Reject vehicle if any control lever is broken or does not operate freely.

(4) Reject vehicle if the outer cable housing is pinched or kinked.

(5) Reject vehicle if there are any loose cable ends, severe bends, kinks, or broken strands on the exposed portion of the inner cables.

(6) Reject vehicle if the brake control lever has no free play and less than 1/5 of the total available control travel remains when the brake force is applied.

(7) Reject vehicle if the clutch control lever has no free play and the clutch lever travel bottoms prior to full clutch engagement.

(8) Reject vehicle if it is not equipped with an operable engine stop control.

(9) Reject vehicle if any cable is excessively slack.

G. STEERING ALIGNMENT

(1) Reject vehicle if the wheel planes do not align with the longitudinal axis of the frame, and thereby causes tracking between the front and rear wheel so as to misalign them by 1 inch or more.

(2) Reject vehicle if there is more than a 3/8-inch run-out in wheel alignment.

5. EXHAUST SYSTEM

A. Reject vehicle if it does not have a muffler that prevents excessive or unusual noise.

B. Reject vehicle if any internal component of the muffler has been removed or altered.

C. Reject vehicle if any mounting or connection is loose, broken, or missing.

D. Reject vehicle if there are any loose or leaking joints, holes, leaking seams or loose interior baffles. Repairs made with a jacket or patch that is welded or brazed securely in place are acceptable. Small holes obviously made by the manufacturer to provide drainage are not cause for rejection.

E. Reject vehicle if the exhaust system is equipped with any bypass or cutout device.

F. Reject vehicle if any flexible tubing has been used to replace any part of the exhaust system unless such tubing was factory installed as original equipment.

G. Reject vehicle if the muffler shield has been removed.

H. Reject vehicle if any unshielded portion of the exhaust system protrudes in a manner that might burn the rider or a passenger seated in a normal position.

I. Reject vehicle if any unshielded portion of the exhaust system is mounted higher than the lowest portion of the passenger seat pan.

J. Reject vehicle if the vehicle is equipped with drag or straight pipes or pipes marked with language or symbols such as “for off-road use only”, indicating that the pipe or pipes are not intended for use on a public way.

K. Reject vehicle if baffles are inserted into the exhaust pipe in place of a muffler. Baffles do not constitute a muffler. The muffler and the exhaust pipe may be welded together.

6. FUEL SYSTEM

A. Reject vehicle if any portion of the fuel system is not securely attached.

B. Reject vehicle if fuel is leaking from any point in the fuel system.

C. Reject vehicle if the fuel tank cap is missing, damaged, or fails to latch.

D. Reject vehicle if any gas line is in direct contact with the engine.

E. Reject vehicle if any fuel system vent or evaporative control system, if originally so equipped, is not present and operational.

7. LIGHTING AND ELECTRICAL SYSTEMS

A. Reject vehicle if any lamp, bulb, lens, or reflective device is broken, severely discolored, inoperable, or shows a color contrary to law or regulation.

B. Reject vehicle if any lens, bulb, or filament is missing or fails to light as designed.

C. Reject vehicle if an improperly connected circuit does not light the proper filaments for the different switch positions.

D. Reject vehicle if any lens is missing, or is rotated, upside down, wrong side out or otherwise improperly installed.

E. Reject vehicle if any lamp, lens or reflective device is improperly located or is not securely fastened to the vehicle.

F. Reject vehicle if any lamp or lens required by law or regulation is covered by any device, that reduces the amount of light, transmitted

or reduces the area of illumination of a lamp or lens by any amount. This includes, but is not limited to, tinted, louvered or mesh covers.

G. Reject vehicle if any lamp or lens is turned or inclined so that the light does not function properly.

H. Reject vehicle if it is rated at over 5 horsepower and is not equipped with a multiple-beam headlamp.

I. Reject vehicle if it not equipped with an electrical energy storage source to provide lighting of a constant intensity if the vehicle was originally manufactured with such a source.

J. Reject vehicle if equipped with LED lights and 50 % or more of the LEDs are not functioning.

8. SIGNAL LAMPS

A. Reject vehicle if any lens is not white or amber to the front and mounted on each side of the vertical centerline at the same height.

B. Reject vehicle if any lens is not clear, red or amber to the rear and mounted on each side of the vertical centerline at the same height. Factory smoked directionals are permitted.

C. Reject vehicle if all of the proper signals do not go on with each throw of the switch, if vehicle is equipped with, or was originally manufactured with turn signals.

D. Reject vehicle if the turn signal operating unit is not functioning properly, if vehicle is equipped with, or was originally manufactured with turn signals.

E. Reject vehicle if the turn signals cannot be operated without moving the hand from the handlebars, if vehicle is equipped with, or was originally manufactured with turn signals.

9. STOP LAMPS

A. Reject vehicle if the stop lamp does not go on with slight pressure on the brake pedal or front brake lever.

B. Reject vehicle if the stop lamp lens is not clear or red. The light must be red.

C. Reject vehicle if the stop lamp(s) is (are) not mounted on the vertical centerline, or symmetrically positioned about the vertical centerline if two lamps are used.

D. Reject vehicle if the stop lamp(s) are mounted less than 15 inches or more than 72 inches above the road surface.

10. REAR LAMPS, LICENSE PLATE LAMPS, AND REAR LAMP COMBINATIONS

A. Reject vehicle if the taillight does not produce sufficient light to be clearly visible from a distance of 100 feet to the rear.

B. Reject vehicle if the tail light lens is not clear or red. The light must be red.

C. Reject vehicle if any tail lamp is not mounted securely in the center or to the left of the axis.

D. Reject vehicle if any tail lamp does not produce a steady or pulsating light to the rear with the brakes applied.

E. Reject vehicle if any license plate light bulb does not produce sufficient steady white light to illuminate the entire rear license plate to be clearly visible from a distance of 50 feet to the rear.

F. Reject vehicle if any after market lighting device is installed around or near the license plate, including illuminated license plate frames, neon lights, blinking lights or any light other than the factory original or its equivalent replacement.

G. Reject vehicle if the rear plate is not mounted horizontally on either the rear of the fender or a side mount. The plate must be located so that it is clearly visible to the rear.

H. Reject vehicle if any light assembly is not mounted on the rear-most part of the rear fender.

I. Reject vehicle if a frame mounted tail lamp assembly extends beyond the outer extremities of the body components. In no event may the lighting devices or components extend beyond the crash bars (if installed).

J. Reject vehicle if the lamp assembly is mounted less than 15 inches or more than 72 inches above the level surface on which the vehicle stands.

11. HEAD LAMPS

A. Reject vehicle if the headlight is mounted more than 54 inches or less than 22 inches above the level surface on which the vehicle it stands.

B. Reject vehicle if the headlamp beam pattern is out of limits and cannot be re-aimed during the inspection.

NOTE: Information regarding headlamp aiming may be obtained from the Maine State Police Inspection Unit online or within additional resource materials.

12. REFLECTORS

A. Reject vehicle if the vehicle is not equipped with at least one adequate reflector securely attached to the rear of the vehicle. The reflector may be part of the rear lamp assembly.

B. Reject vehicle if the rear reflectors are not red or are not mounted on the vertical centerline. If two reflectors are used, reject vehicle if both are not mounted about the vertical centerline.

C. Reject vehicle if the reflectors are not adequate to reflect the high-beamed headlight of a vehicle, approaching from the rear and being driven at night on an unlighted highway from a minimum distance of 200 feet.

D. Reject vehicle if there is not a red reflector mounted on each side of the vehicle as far as practical to the rear, and an amber reflector mounted on each side of the vehicle as far as practical to the front. This section does not apply to motorcycles manufactured before January 1, 1968.

E. Reject vehicle if any reflector is mounted less than 15 inches or more than 60 inches above the level surface on which the vehicle it stands.

13. HORN

A. Reject vehicle if it is not equipped with a horn.

B. Reject vehicle if the horn is not securely mounted or is not audible.

C. Reject vehicle if the horn-actuating device does not function properly or is not accessible to the operator without moving the operator’s hand from the handlebar. This section does not apply to a three-wheeled cycle equipped with a steering wheel.

14. TIRES, WHEELS, RIMS, AND SPOKES

A. TIRES

(1) Reject vehicle if any tire is worn to less than 2/32 inch anywhere on the tread or worn to the wear indicators.

(2) Reject vehicle if any part of the cord is exposed.

(3) Reject vehicle if there are any bumps, bulges or knots.

(4) Reject vehicle if there is any tread separation.

(5) Reject vehicle if any tire has been re-grooved or re-cut.

(6) Reject vehicle if any tire has tread cuts or snags in excess of one inch or a cut deep enough to expose the body cords.

(7) Reject vehicle if the any tire is not the recommended size and speed rating required by the manufacturer.

B. WHEELS, RIMS AND SPOKES

(1) Reject vehicle if any spokes or braces are broken or missing.

(2) Reject vehicle if any spokes are visibly loose.

(3) Reject vehicle if any part of the wheel rim is cracked or broken.

(4) Reject vehicle if any brace, disc, strut, or spider is cracked or broken.

15. MIRRORS

A. Reject vehicle if it is not equipped with at least one rearview mirror.

B. Reject vehicle if any mirror is not mounted securely to prevent swinging and excessive vibration.

C. Reject vehicle if any mirror is broken or has exposed sharp edges.

D. Reject vehicle if the reflecting surface is tarnished or peeling to the degree at which visibility is reduced.

E. Reject vehicle if a mirror does not have a minimum of 10 square inches of reflective surface for convex construction or 12.5 square inches of reflective surface for unit magnification construction.

F. Reject vehicle if any mirror cannot be adjusted or cannot maintain adjustment.

G. Reject vehicle if the mirror location does not provide the operator with an unobstructed view 200 feet to the rear.

190.50 RECONSTRUCTED MOTORCYCLES AND AUTOCYCLES

1. RECONSTRUCTED MOTORCYCLES

A. A specially constructed(reconstructed) motorcycle must be inspected carefully as to the quality of workmanship, the integrity of the vehicle components, and the vehicle geometry. If the inspection technician has any doubt or question about the strength or safety of any component of a specially constructed motorcycle, no inspection sticker is to be issued.

B. Specially constructed motorcycles must comply with all applicable laws and regulations, including, but not limited to this Chapter.

2. AUTOCYCLES

A. An autocycle shall meet the provisions of a motorcycle as well as the following criteria;

(1) An autocycle must be equipped with safety belts for all passengers, a roll bar, a windshield equipped with a wiper, and a steering wheel or tiller.

(2) Autocycles shall be equipped with brakes on the two main wheels.

B. Reject vehicle if a seat belt is not present and functioning for each seat.

C. Reject vehicle if it is not equipped with a roll bar.

D. Reject vehicle if it is not equipped with a steering wheel or steering tiller.

E. Reject vehicle if it is not equipped with a windshield with at least one properly operating wiper.

16 DEPARTMENT OF PUBLIC SAFETY

222 BUREAU OF STATE POLICE

SECTION 200: CLASS D COMMERCIAL VEHICLE INSPECTION

SUMMARY: This section describes the inspection procedures and standards for Class D vehicles. This section also establishes the standards for rejecting a Class D vehicle for inspection.

200.01 DEFINITIONS

Generally, unless the context clearly indicates otherwise, undefined terms used in this rule have the same meaning as in Title 29-A. As used in this Rule, unless the context clearly indicates otherwise, these terms have the following meanings.

200.05 TRANSMISSION AND BRAKES

1. TRANSMISSION

A. Test: If the vehicle is equipped with an automatic transmission, test the vehicle's transmission forward and reverse gears as well as the park position in automatic transmissions to ensure proper working order.

B. Reject vehicle if the forward or reverse gears are inoperative.

C. Reject vehicle if the park position is inoperative.

D. Reject vehicle if the gear selection indicator does not properly identify the current gear position.

2. BRAKES – ANTI-LOCKING SYSTEMS (ABS)

A. Reject vehicle if the warning light fails to illuminate during the cycle or self-check, or a self-diagnostic error is indicated.

B. Reject vehicle if the ABS braking system is disconnected or disabled.

3. GENERAL FOR ALL BRAKE SYSTEMS

A. Reject vehicle if there is an absence of braking action on any axle required to have brakes (such as missing brakes; brake shoes failing to move upon application of a wedge, S-cam, or disc brake).

B. Reject vehicle if there are missing, loose or broken mechanical components including but not limited to: shoes, linings, pads, springs, anchor pins, spiders, cam rollers, clevis pins and clevises, push-rods, air chamber mounting bolts, or worn or frozen pins in slack adjuster. No bolts allowed in slack adjuster in place of clevis pins.

C. Reject vehicle if there are loose brake components including; air chambers, spiders, cam shaft support brackets, or S cam bushings with more play than the manufacturers specifications allow.

D. Reject vehicle if there are any audible air leaks at the brake chamber, air lines, tanks, valves, or connections.

E. Reject vehicle if any brake is past the readjustment limit. Stroke shall be measured with engine off and reservoir pressure of 90 to 100 p.s.i. with the brakes fully applied. The maximum strokes at which brakes should be readjusted are given below.

F. Reject vehicle if there is a missing brake on any axle required to have brakes. Ref. CFR 49 393.48.

G. Reject vehicle if there is a mismatch across any axle of air chamber size or slack adjuster length.

CLAMP-TYPE BRAKE CHAMBER DATA
(Dimensions in inches)

Type	Outside Diameter	Rated Stroke	Maximum Stroke at Which Brakes Must Be Adjusted
6	4 ½	1.75	1 ¼
9	5 ¼	1.75	1 3/8
12	5 11/16	1.75	1 3/8
16	6 3/8	2.25	1 ¾
20	6 25/32	2.25	1 ¾
24	7 7/32	2.25	1 ¾
30	8 3/32	2.50	2
36	9	3.00	2 ¼

“LONG STROKE” CLAMP-TYPE BRAKE CHAMBER DATA
(Dimensions in inches)

Type	Outside Diameter	Rated Stroke	Maximum Stroke at Which Brakes Must be Adjusted
16	6 3/8	2.50	2.0 ID Tags

20	6 25/32	2.50	2.0 ID Tags
24	7 7/32	2.50	2.0 ID Tags
24	7 7/32	3.00	2.5 ID Tags
30	8 3/32	3.00	2.5 ID Tags

TIE ROD STYLE PISTON BRAKE CHAMBER DATA
(Dimensions in inches)

Size	Outside Diameter	Maximum Stroke at Which Brakes Must be Adjusted
30	6 ½	2 ½

BOLT TYPE BRAKE CHAMBER DATA
(Dimensions in inches)

Type	Outside Diameter	Maximum Stroke at Which Brakes Must be Adjusted
A	6 15/16	1 3/8
B	9 3/16	1 ¾
C	8 1/16	1 ¾
D	5 ¼	1 ¼
E	6 3/16	1 3/8
F	11	2 ¼
G	9 7/8	2

ROTOCHAMBER DATA
(Dimensions in inches)

Type	Outside Diameter	Maximum Stroke at Which Brakes Must be Adjusted
9	4 9/32	1 ½
12	4 13/16	1 ½
16	5 13/32	2
20	5 15/16	2
24	6 13/32	2
30	7 1/16	2 ¼
36	7 5/8	2 ¾
50	8 7/8	3

4. WEDGE BRAKES

A. Reject vehicle if the wheel rotates with the service brake applied.

B. Reject vehicle if the shoe travel exceeds 1/16 inch.

C. Reject vehicle if the shoe fails to move on application of the service brakes.

5. BRAKE LININGS OR PADS

A. Reject vehicle if the lining or pad is not firmly attached to the shoe.

B. Reject vehicle if any lining or pad is contaminated with any amount of oil, grease, or brake fluid.

C. Reject vehicle if, on a non-steering axle, the lining thickness is less than 1/4 inch at the shoe center for air drum brakes; 1/16 or less at the shoe center for hydraulic and electric drum brakes; and less than 1/8 inch for air disc brakes or at wear indicators.

D. Reject vehicle if, on a steering axle, the lining thickness is less than 1/4 inch at the shoe center for drum brakes; less than 1/8 inch for air disc brakes; and 1/16 inch or less for hydraulic disc or electric brakes or at wear indicators.

6. BRAKE DRUMS AND ROTORS AND CALIPERS

A. Reject vehicle if there are any external cracks or if there are cracks that open upon brake application. Do not confuse short hairline heat cracks with flexural cracks.

B. Reject vehicle if any portion of the drum or rotor is missing or rusted to the point of danger of falling away. All friction surfaces should be checked carefully for rust and deterioration. Reject vehicle if friction surface is rusted to the point of deterioration.

C. Reject vehicle if any drum or rotor is worn beyond OEM discard specifications.

D. Reject vehicle if cracks on the surface extend to the outer edges of the rotor.

E. Reject vehicle if the rotor is damaged, or two or more grooves are worn beyond .090 inch (2.25 mm).

F. Reject vehicle if any caliper is loose, does not meet manufacturers specification or is seized.

G. Reject vehicle if any anchor plate is loose or a bolt is missing.

H. Reject vehicle if any brake pad is damaged or contaminated.

I. Reject vehicle if the adjustment cannot be made to meet the manufacturers specifications.

J. Reject vehicle if any wheel seal is leaking. Slight seepage is not a cause for rejection.

7. EMERGENCY/PARKING BRAKE SYSTEM

A. Reject vehicle if any spring operated brake on a vehicle or vehicle combination is not applied upon actuation of the emergency/parking brake control, including a drive line hand controlled parking brake.

B. Reject vehicle if the brake fails to hold.

C. Reject vehicle if the brake fails to fully apply or release.

D. Reject vehicle if the primary emergency/parking brake system is inoperative or if it is not as originally equipped. The system must be held in the applied position by energy other than fluid pressure, air pressure or electric energy.

E. Reject vehicle if the indicator lamp (if so equipped) fails to illuminate.

F. Reject vehicle if the mechanism binds or is inoperable.

G. Reject vehicle if any cable is frayed, broken, or inoperable.

H. Reject vehicle if the lining (if equipped) is less than 1/16 inch above the shoe on an external clamping type.

8. HYDRAULIC BRAKES

A. Reject vehicle if the master cylinder is leaking, loose, or the fluid level is ½ inch below the full line or, if not marked, ½ inch below the top.

B. Reject vehicle if the cap is missing or loose, if the vent holes are plugged, or if the gasket is missing or damaged.

C. Reject vehicle if the braked pedal travel from its free height to its depressed height is more than 65% of the total distance, or, if when holding steady pressure, the pedal travels to the floor or does not meet the manufacturer’s specifications.

D. Reject vehicle if the power assist unit fails to operate.

E. Reject vehicle if any brake hose seeps or swells under application of normal pressure.

F. Reject vehicle if the check valve is missing or inoperative.

G. Reject vehicle if there is any visually observed leaking hydraulic fluid in the brake system.

H. Reject vehicle if any hydraulic hose is abraded (chafed) through the outer cover-to-fabric layer.

I. Reject vehicle if any fluid line or connection is leaking, restricted, crimped, cracked, or broken.

J. Reject vehicle if the brake failure light or low fluid warning light is on or is inoperative.

K. Reject vehicle if the hydraulic pump drive belt is loose, cracked, slipping, or missing.

9. HYDRAULIC SYSTEM HOSES AND TUBING

A. Reject vehicle if any line or hose is leaking, rusted to point of flaking, bulging, pitted, welded, cracked, flattened, not securely mounted, or has restricted sections. Surface rust is not cause for rejection.

B. Reject vehicle if repairs to lines or hoses have been made with anything other than steel tubing, stainless steel, or other DOT approved lines or couplings.

C. Reject vehicle if the connections are anything other than double flared.

D. Reject vehicle if there is a hose with any damage extending through the outer reinforcement ply.

E. Reject vehicle if a hose is severely chafed. If there is minor chafing, the hose should be re-routed so as to prevent further damage.

F. Reject vehicle if any hose is routed in such a manner as to cause damage.

G. Reject vehicle if hoses, lines, and fittings do not conform to manufacturer’s original equipment standards.

10. VACUUM SYSTEMS

A. Reject vehicle if the vacuum system has insufficient vacuum reserve to permit two full brake applications after the engine is shut off.

B. Reject vehicle if a required low vacuum warning device is missing or inoperative.

C. Reject vehicle if the lines or hoses are collapsed, broken, chafed, insecurely mounted, or less than 1.5 inches from any part of the exhaust system.

D. Reject vehicle if the system is leaking.

E. Reject vehicle if the clamps are missing, loose, or broken.

F. Reject vehicle if any tank is missing, loose, damaged or leaking.

G. Reject vehicle if the vacuum pump is loose.

H. Reject vehicle if the vacuum pump drive belt is loose, cracked, excessively worn, or contaminated with oil.

I. Reject vehicle if the vacuum pump is unable to achieve and maintain 18 inches of vacuum.

11. HYDRAULIC SYSTEM WITH HYDRAULIC ASSIST

A. Reject vehicle if no movement in the pedal is detected when starting engine.

B. Reject vehicle if the warning indicator lamp is inoperable when the power steering pump is stopped.

C. Reject vehicle if the pump reservoir is below the indicated “ADD” mark.

D. Reject vehicle if hydro pump or any line or hose is leaking.

E. Reject vehicle if the pump or belt is loose, cracked, or excessively worn.

F. Reject vehicle if the electric motor fails to operate when the engine is not running.

12. AIR ASSIST HYDRAULIC BRAKE SYSTEM

Air assist components of air assist hydraulic brake system are inspected as in the air brake section.

13. AIR SYSTEMS

Compressed Air Reserve

Reject vehicle if the reservoir pressure is lowered more than 18 p.s.i. after one full brake application after the engine is shut down.

14. AIR RESERVOIR, TRACTOR PROTECTION, AND TREADLE VALVES

A. Reject vehicle if any check valve is inoperable or missing.

B. Reject vehicle if any check valve leaks or does not close.

C. Reject vehicle if the air is not quickly exhausted through the exhaust port of the quick-release valve when the brakes are released.

D. Reject vehicle if any valve mounting is un-secure or if the bracket is broken or loose.

E. Reject vehicle if the air is not quickly exhausted through the exhaust port of the relay valve when the brakes are released.

F. Reject vehicle if the tractor-protection control valve does not pop out or close at or above 20 p.s.i..

G. Reject vehicle if air leakage is still noticeable at the emergency glad hand after the control valve has operated.

H. Reject vehicle if any tractor protection valve leaks with the button out.

15. AIR COMPRESSOR

A. Reject vehicle if the air compressor mounting has any loose, cracked, broken, or missing bolts, brackets, braces, or adapters.

B. Reject vehicle if compressor air intake cleaner is clogged enough to prevent proper air intake.

C. Reject vehicle if any air compressor drive belt is worn, frayed, or loose.

D. Reject vehicle if any air compressor pulley is cracked, broken, loose, or is bent or damaged so as to cause belt loss.

E. Reject vehicle if any air tank mounting device such as straps, brackets or other hardware, is broken, missing, or loose.

F. Reject vehicle if air compressor has excessive oil leaks or the air system is contaminated with oil.

16. AIR PRESSURE BUILD UP TIME

A. Test Procedure: With the trailer uncoupled and tires chocked, fully charge the system to the governor cutout pressure. Make one full brake application and note the air pressure reading on the gauge. Continue to reduce the air pressure by moderate brake applications to at least 10 PSI below the governor cut-in pressure. Release the brake and run the engine at the manufacturer’s recommended rpm and determine the time required to increase the air pressure from the level achieved after one brake application to the governor cut-out pressure.

B. Reject vehicle if the time required to build pressure from the level after one brake application to governor cut-out pressure is more than 30 seconds.

17. AIR PRESSURE GOVERNOR

A. Test Procedure: With the trailer line uncoupled and tires chocked, fully charge the system to its maximum capacity. Observe the gauge pressure and determine if the governor has a cut-out. With the engine running, make a series of brake applications and observe the gauge pressure to determine when the governor cuts in and out.

B. Reject vehicle if the governor cut-out pressure is not between 115 and 135 p.s.i..

C. Reject vehicle if the governor cut-in pressure is below 80 p.s.i..

18. AIR PRESSURE WARNING DEVICE

A. Test Procedure: With the air system fully charged, reduce the air pressure by moderate brake applications or by opening the drain cocks on the system. Observe the pressure at which the visual or audible warning device comes on.

B. Reject vehicle if the air pressure gauge does not function properly. If vehicle was originally equipped with dual gauges, both must work.

C. Reject vehicle if the air pressure warning device does not activate before pressure is lowered to 55 PSI or ½ of the governor cut-out pressure, whichever is less.

D. Reject vehicle if the air pressure warning device does not continuously operate below activation pressure.

E. Reject vehicle if either the visual or audible warning device fails to operate, if vehicle was originally equipped with both visual and audible devices.

19. AIR PRESSURE LEAKAGE

A. Test Procedure: With the air system fully charged and the trailer lines disconnected, stop the engine. With the brakes released, observe the pressure drop in one minute. After determining the pressure loss with the brakes released, make a full brake application and observe the pressure drop for one minute while the brakes are fully applied and the engine is off.

B. Reject vehicle if the leakage rate with the brakes released in one minute exceeds 2 p.s.i. for single vehicles.

C. Reject vehicle if the leakage rate with full brake application in one minute exceeds 3 p.s.i. for single vehicles.

20. AIR PRESSURE RESERVE

A. Test Procedure: With the air system fully charged, stop the engine and note the air pressure. Make one full brake application and then observe the pressure drop.

B. Reject vehicle if the pressure drop is more than 20% of the first reading before the brakes are applied.

21. AIR BRAKE COMPONENTS

A. Reject vehicle if any glad hand is damaged, cracked, corroded, insecurely mounted, or if any seal is broken.

B. Reject vehicle if any air line is abraded to the first body ply cord, or if an air line is un-secure, flattened, damaged by heat, cracked, broken, kinked, or leaking.

C. Reject vehicle if any air line is within 2 inches of the exhaust and is not protected by a heat shield.

D. Reject vehicle if any air line does not meet OEM design standards.

E. Reject vehicle if any hose is exposed at the first layer on a braided line.

F. Reject vehicle if any air line connector does not meet OEM design standards.

G. Reject vehicle if any air tank is missing, leaking, loose, or damaged so as to cause possible failure.

H. Reject vehicle if any air tank bracket or strap is missing, cracked, broken, or if an inferior substitute has been used.

I. Reject vehicle if any drain cock is missing, loose, leaking, inoperable, or does not meet OEM design standards.

J. Reject vehicle if any moisture ejector (manual or automatic) is inoperable or is not present on each tank.

K. Reject vehicle if any hose is improperly repaired (i.e., a splice made by sliding two hose ends over a piece of tubing and clamping the hose to the tube).

L. Reject vehicle if brake tubing (plastic, copper or steel) is used in a frame-to-axle connection, unless it is factory original.

M. Reject vehicle if the brake tubing is not securely attached to the frame and routed in such a way as to prevent damage to the line.

N. Reject vehicle if any air tank is severely rusted to the point of possible failure.

22. BRAKE MECHANICAL COMPONENTS

A. Reject vehicle if any clevis pin is excessively worn, a cotter pin is missing, or an inferior substitute, such as a nut and bolt, has been used.

B. Reject vehicle if any clevis yoke is excessively worn, cracked, broken, or bent.

C. Reject vehicle if any pushrod is bent, broken, or misaligned.

D. Reject vehicle if any slack adjuster is bent, broken, excessively worn, seized, or function improperly.

E. Reject vehicle if any slack adjuster nut self-locking sleeve is seized or inoperable.

F. Reject vehicle if the pushrod clevis pin hole setting is not in the same hole on the same axle, and the distance from the center of the cam to the hole is not the same on the same axle.

G. Reject vehicle if any return spring is missing, stretched, or does not hold the lower roller to the cam.

H. Reject vehicle if any roller is missing, has flat spots, or is the wrong size.

I. Reject vehicle if any ‘spider’ is bent, loose, or if any bolts are missing.

23. SELF-ADJUSTING SLACK ADJUSTERS

A. Reject vehicle if any automatic brake adjusters or brake adjustment indicators are missing or inoperative.

B. Reject vehicle if the indicators are not clearly visible.

C. Reject vehicle if the adjustment is not within the manufacturer’s specifications. All self-adjusting slack adjusters must be checked after brakes are adjusted to specifications.

D. Reject vehicle if any manufacturer-installed self-adjusting slack adjuster was replaced with a non self-adjusting slack adjuster after October 20, 1994.

200.10 COUPLING DEVICES

1. FIFTH WHEELS

A. Mounting to Frame

(1) Reject vehicle if any fasteners are missing or ineffective. (A fastener is not considered missing if there is an empty hole in the device but no corresponding hole in the frame or vice versa).

(2) Reject vehicle if there is any movement between mounting components.

(3) Reject vehicle if any mounting angle iron is cracked or broken.

B. Mounting Plates and Pivot Brackets

(1) Reject vehicle if any fasteners are missing or ineffective.

(2) Reject vehicle if any welds or parent metal is cracked.

(3) Reject vehicle if there is more than 3/8-inch horizontal movement between pivot bracket pin and bracket.

(4) Reject vehicle if pivot bracket pin is missing or not secured.

C. Sliders

(1) Reject vehicle if any latching fasteners are missing or ineffective.

(2) Reject vehicle if any fore or aft stops are missing or ineffective.

(3) Reject vehicle if there is more than 3/8-inch movement between the slider bracket and the slider base.

(4) Reject vehicle if any slider component is cracked in the parent metal or a weld.

D. Lower Coupler

(1) Reject vehicle if the horizontal movement between the upper and lower fifth wheel halves exceeds 1/2 inch when coupled.

(2) Reject vehicle if the operating handle is not in the closed or locked position when coupled.

(3) Reject vehicle if the kingpin is not properly engaged when coupled.

(4) Reject vehicle if there is separation between the upper and lower coupler, allowing light to show through from side to side when coupled.

(5) Reject vehicle if there are any cracks in the fifth wheel plate.

(6) Reject vehicle if the locking mechanism parts are missing, broken or deformed to the extent that the kingpin is not securely held.

(7) Reject vehicle if the locking mechanism is severely rusted and not properly lubricated.

2. PINTLE HOOKS

A. Frame Mounting

(1) Reject vehicle if there are any missing or ineffective fasteners.

(2) Reject vehicle if mounting surface cracks extend from the point of attachment. (For example, cracks in the frame at the mounting bolt holes).

(3) Reject vehicle if the mounting is loose.

(4) Reject vehicle if the frame cross member providing the pintle hook attachment is cracked.

B. Integrity of Pintle Hook Assembly

(1) Reject vehicle if there are cracks anywhere in the pintle hook assembly.

(2) Reject vehicle if there are any welded repairs to the pintle hook.

(3) Reject vehicle if any part of the horn section is reduced by more than 20%.

(4) Reject vehicle if the latch is insecure.

3. DRAWBAR / TOWBAR EYE

A. Frame Mounting

(1) Reject vehicle if there are any cracks in the attachment welds.

(2) Reject vehicle if there are any missing or ineffective fasteners.

B. Integrity of Drawbar / Towbar eye

(1) Reject vehicle if there are any cracks.

(2) Reject vehicle if any part of the eye is reduced by more than 20%.

4. DRAWBAR / TOWBAR TONGUE

A. Slider (power or manual)

(1) Reject vehicle if the latching mechanism is ineffective.

(2) Reject vehicle if the stop is missing or ineffective.

(3) Reject vehicle if there is movement of more than ¼ inch between the slider and housing.

(4) Reject vehicle if any air or hydraulic cylinders, hoses or chambers are leaking.

(5) Reject vehicle if any pivot pins are worn exceeding the manufactures specifications on wheel lifts, cross bars, under reach cross bars and tow bars on a wrecker.

B. Integrity

(1) Reject vehicle if there are any cracks.

(2) Reject vehicle if there is movement of ¼ inch or more between the subframe and the drawbar at the point of attachment.

5. SAFETY DEVICES

A. Reject vehicle if any safety device is missing on a vehicle required to have safety device(s).

B. Reject vehicle if any safety device is unattached or incapable of secure attachment.

C. Chains and hooks;

(1) Reject vehicle if there is wear to the extent of a measurable reduction in the cross section of any link.

(2) Reject vehicle if there is an improper repair, including welding, wire, small bolts, rope, or tape.

(3) Reject vehicle if any link is bent, stretched, twisted, cut, or in any way distorted.

D. Cable

(1) Reject vehicle if any cable is kinked or there are broken cable strands.

(2) Reject vehicle if there are improper clamps or clamping. The saddle clamp should always be on the 'live' side of the cable.

6. SADDLE MOUNTS

A. Method of Attachment

(1) Reject vehicle if any fasteners are missing or ineffective.

(2) Reject vehicle if any mountings are loose.

(3) Reject vehicle if there are any cracks or breaks in a stress or load bearing member.

(4) Reject vehicle if the horizontal movement between upper and lower saddle mount halves exceeds ¼ inch.

200.15 EXHAUST SYSTEM

1. MUFFLER

Reject vehicle if it does not have a muffler. Do not reject if the vehicle was manufactured without a muffler, but in accordance with the Federal Motor Vehicle Safety Standards.

2. EXHAUST SYSTEM LEAKS

A. Reject vehicle if there are exhaust system leaks at any point forward of, or directly below the driver/sleeper compartment. Exhaust system must be solid and secure.

B. Bus Exhaust Systems;

(1) Reject vehicle if it is a gasoline powered bus and exhaust fumes leak or discharge forward of a point 6 inches from the rearmost part of the bus.

(2) Reject vehicle if it is a non-gasoline powered bus and exhaust fumes leak or discharge to a point in excess of 15 inches forward of the rearmost part of the bus or forward of a door or window designed to be opened, except for emergency exits.

(3) Reject vehicle if any part of the exhaust system of the vehicle is located in a position that would be likely to result in burning, charring or damaging the electrical wiring, the fuel supply, or any combustible part of the motor vehicle, including but not limited to, excessive oil leaking from the engine, transmission, or rear end.

200.20 FUEL SYSTEM

1. Reject vehicle if the fuel system has a visible leak at any point.
2. Reject vehicle if the fuel tank filler cap is missing.
3. Reject vehicle if the fuel tank is not securely attached to the motor vehicle because of loose, broken, or missing mounting bolts or brackets. (Some fuel tanks use springs or rubber bushings that permit movement).
4. Reject vehicle if fuel lines are rusted to the point of flaking, chafed, or improperly mounted.

200.25 LIGHTING DEVICES

1. HEADLAMP INSPECTIONS AND AIMING

A. GENERAL LAMP INSPECTION

General lamp inspection requirements must comply with 49 CFR 393.

(1) Reject vehicle if any of the lighting devices required by law are inoperable or missing. These include reflex reflectors, headlamps, tail lamps, backing lights, plate lights, signal lights, marker lights, side marker lights and fog or driving lights.

(2) Reject vehicle if any bulb in any lamp required by law or regulation fails to function properly.

(3) Reject vehicle if any circuit fails to light the proper filaments for the different switch positions.

(4) Reject vehicle if any lens is broken or missing.

(5) Reject vehicle if any lamp is not securely fastened to the vehicle.

(6) Reject vehicle if any lamp shows a beam of color contrary to law or this Chapter.

(7) Reject vehicle if any lamp or lens is turned or inclined so that its light is not properly directed.

(8) Reject vehicle if any lens or reflex reflector is broken or missing.

(9) Reject vehicle if LED lighting has more then 50% of LEDs not functioning.

B. HEADLAMPS

The station must have the appropriate equipment capable of testing the headlight aim of the vehicle.

(1) Headlamps must be checked for proper headlight aim.

(2) Reject if the headlamps are out of adjustment based on the inspecting technicians' training, education and experience.

(3) Reject vehicle if the headlamp has dirt or moisture inside, or has obvious discoloration, contamination, or reflector deterioration that causes a reduction in the effectiveness of the headlamp.

(4) Reject vehicle if any headlamp lens is covered or partially covered by any material, which reduces the light output of the lamp or the surface area of the lamp.

(5) Reject vehicle if the beam indicator lamps do not indicate the proper beam to the driver.

(6) Reject vehicle if the headlamps are located less than 22 or more than 54 inches above the level surface upon which the vehicle stands. Vehicle with snowplows attached are exempt from this requirement.

(7) Reject vehicle if the headlamps exceed 150,000 candlepower. Quartz halogen lamps that are within the power limits will be marked "DOT" or "SAE."

2. TURN SIGNAL SYSTEM

A. Reject vehicle if any signal is missing or fails to operate properly in any vehicle that was originally manufactured with turn signals.

B. Reject vehicle if any signal lamp lens is broken and not properly repaired* or missing.

C. Reject vehicle if any signal lamp lens is not white or amber to the front and red to amber to the rear. Amber rear turn signals may not

be co-joined with parking or marker lights so as to be steadily illuminated.

D. Reject vehicle if the signal lamp wiring is broken, abraded to the point of showing bare wire, or shows evidence of burning or short-circuiting.

E. Reject vehicle if any electrical connection is not tight and secure, or show signs of excessive corrosion, or if any bare wire is exposed on the connection terminals.

F. Reject vehicle if the signal lamp housing is not securely fastened.

G. Reject vehicle if any proper signal lamp fails to operate properly with each throw of the switch.

H. Reject vehicle if the vehicle is so constructed or loaded so as to prevent the operator from making a hand or arm signal if such vehicle is not equipped with an approved type of signaling device.

I. Reject vehicle if the signal lamp operating unit is not functioning properly.

3. STOP LAMPS

A. Reject vehicle if any stop lamp does not operate properly with slight pressure on the brake.

B. Reject vehicle if all stop lamps do not produce a steady or pulsating red light to the rear with the brakes applied.

C. Reject vehicle if a lens is broken and not properly repaired* or is not red.

D. Reject vehicle if the lamp housing is not securely fastened.

4. REAR LAMPS, LICENSE PLATE LAMPS, AND REAR LAMP COMBINATIONS

A. Reject vehicle if the tail light bulbs do not produce sufficient light so as to be visible from a distance of 100 feet or more to the rear.

B. Reject vehicle if all the taillights do not produce a red light.

C. Reject vehicle if any tail light is broken and not properly repaired*, missing, discolored, or does not fit properly.

D. Reject vehicle if the lamps are not securely mounted in the center or to the left of the axis.

E. Reject vehicle if the license plate light bulbs do not produce sufficient steady white light to illuminate the entire rear license plate from a distance of 50 feet to the rear.

F. Reject vehicle if the lamp housing is not securely fastened.

G. Reject vehicle if all tail and rear plate lights do not operate properly in all switch positions.

H. Reject vehicle if rear lights are obstructed in any way.

5. WIRING AND SWITCHES

A. Reject vehicle if any switch for an item required to be inspected is not in good condition or is not functioning properly.

B. Reject vehicle if the wiring is in poor condition, is improperly installed, or is so located as to incur damage.

C. Reject vehicle if any connection is loose or shows signs of excessive corrosion.

6. REFLECTORS

A. Reject vehicle if the vehicle is not equipped with at least one adequate reflector securely attached to the rear thereof. The reflector may be part of the rear lamp.

B. Reject vehicle if the rear reflectors do not have red lenses.

C. Reject vehicle if any lens is broken and not properly repaired*.

D. Reject vehicle if the reflectors are inadequate to reflect at night on an unlighted highway for at least 200 feet from the lawful high-beamed headlight of a vehicle approaching from the rear.

E. Retro reflective sheeting may be used in place of an array of reflectors.

NOTE: Properly repaired means that the repair is made with a clear material or a material that is the same color of the lens and prevents moisture from entering the inside of the lens and that maintains the integrity of the unit. Tape is not considered to be an acceptable repair material.

NOTE: Vehicles or combinations of vehicles with a gross vehicle weight rating or gross weight of 10,001 pounds or more, engaged in commerce or otherwise subject to Federal Motor Carrier Safety Regulations must meet the requirements of 49 CFR Part §393. Technicians are directed to these regulations for complete requirements and specifications.

200.30 STEERING MECHANISM

1. WELD

   A. Reject vehicle if there are any welds on steering components.

2. STEERING WHEEL FREE PLAY

   A. Reject vehicle if the free play in the steering wheel exceeds the manufacturer's specifications

NOTE: On vehicles equipped with power steering, the engine must be running to check for steering wheel play.

3. STEERING COLUMN

   A. Reject vehicle if the U-bolt(s) or positioning part(s) are loose or missing.

   B. Reject vehicle if the universal joint(s), slip joints, pins and dogs are worn, faulty, or obviously repaired by welding.

   C. Reject vehicle if the steering wheel is not properly secured.

   D. Reject vehicle if steering shaft bearing and bushing are loose.

   E. Reject vehicle if the steering wheel is bent or broken.

4. KING PINS

   A. Test Procedure: With the front end lifted from the axle, measure the movement at the top or bottom of the tire at the outer circumference. Eliminate all wheel bearing movement by applying the service brake either with assistance from another person or with a mechanical brake holder.

   B. Reject vehicle if the king pin load-carrying bearing is missing or worn beyond manufacturers specifications.

   C. Reject vehicle if the measured movement at the top or bottom of the tire is greater than the manufacturers specifications;

5. BALL JOINTS

A. Inspection of ball joints on models prior to 1973 must be conducted with the joints unloaded. Starting in 1973, manufacturers started using ball joints with wear indicators. Ball joints with wear indicators must be inspected with the joints loaded. Before inspecting the ball joints, check to see whether the joints need to be loaded or unloaded.

B. Testing of Vehicles without Wear Indicators: Hoist the vehicle by the lower control arm when the spring is supported by the lower control arm, or by the frame when the spring is supported by the upper control arm.

(1) To test the vertical movement, position a pry bar under the tire and with a lifting motion sufficient to overcome the weight of the wheel assembly, move the wheel up and down and observe the movement shown on the dial indicator.

(2) To test the horizontal movement, grasp the tire and wheel assembly at the top and bottom. Move it in and out to detect looseness.

C. Reject vehicle if the movement of the load carrying and/or non-load carrying ball joints exceed the manufacturer’s specifications.

D. Testing of Vehicles with Wear Indicators: Support the vehicle with the ball joints in a loaded condition. Wipe the grease fitting and boss free of dirt and grease.

E. Reject vehicle if the fitting boss is flush or is inside the cover surface.

6. FRONT AXLE BEAM AND STEERING COMPONENTS OTHER THAN THE STEERING COLUMN

A. Reject vehicle if the components are cracked.

B. Reject vehicle if there are any obvious welded repairs.

C. Reject vehicle if axle king pin bore is worn more than manufacturers specifications.

7. STEERING GEAR BOX, POWER STEERING PUMP AND LINES

A. Reject vehicle if any mounting bolt(s) are loose or missing.

B. Reject vehicle if there are cracks in the gearbox, pump, belts, or mounting brackets.

C. Reject vehicle if there are any welds.

D. Reject vehicle if there are any leaks in the gearbox, power steering pump, lines and hoses.

E. Reject vehicle if there is any looseness in the steering box sector and output shafts.

F. Reject vehicle if there is any binding in system when the vehicle is jacked up and the front tires are off the ground.

G. Reject vehicle if any power steering hose or line is leaking, frayed, cracked or is improperly routed.

H. Reject vehicle if power steering fluid is low.

8. PITMAN ARM

A. Reject vehicle if there is any looseness of the pitman arm on the steering gear output shaft.

B. Reject vehicle if there are any welds.

9. AUXILIARY STEERING SYSTEMS

A. Reject vehicle if there are any leaks in the system.

B. Reject vehicle if the auxiliary power assist cylinder is loose.

C. Reject vehicle if air power assist is leaking.

10. BALL AND SOCKET JOINTS

A. Reject vehicle if there is any movement under the steering load of a stud nut.

B. Reject vehicle if there is any motion other than rotational, between any linkage member and its attachment point under hand pressure. Vehicles with steering assist control valves must be checked with the engine on.

11. TIE RODS AND DRAG LINKS

A. Reject vehicle if the clamp(s) or clamp bolt(s) on the tie rods or drag links are loose.

B. Reject vehicle if there is any looseness in any threaded joint.

C. Reject vehicle if there are any welds.

12. NUTS

Reject vehicle if any nut(s) on the tie rods, pitman arm, drag link, steering arm or tie rod arm is loose or missing.

13. FRONT WHEEL BEARINGS

A. Reject vehicle if the movement measured at the circumference of the tire exceeds the manufacturers specifications.

B. Reject vehicle if the lubrication is insufficient.

C. Reject vehicle if roughness or noise is evident during wheel rotation.

D. Reject vehicle if the races or rollers are chipped, burred, pitted, or show evidence of overheating, if visible through the inspection hole.

E. Reject vehicle if the bearing end play exceeds the manufacturer's specifications.

F. Reject vehicle if binding or roughness is detected while rotating bearing.

G. Reject vehicle if the bearing adjustment locking device is missing, not engaged, or not functioning.

H. Reject vehicle if the oil hubcap is missing, damaged, leaking, or if the filler plug is missing.

I. Reject vehicle if the hubs are damaged or cracked.

J. Reject vehicle if sealed bearings do not meet the manufacturer's specifications for looseness.

14. STEERING SYSTEM MODIFICATIONS

Reject vehicle if there is any modification or other condition that interferes with the free movement of any steering component.

200.35 SUSPENSION

Reject vehicle if any U-bolt(s), spring hanger(s), or other axle positioning part(s) are cracked, broken, loose, or missing.

1. SPRING ASSEMBLY

A. Reject vehicle if any leaves in a leaf spring assembly are broken, welded, cracked, or missing.

B. Reject vehicle if a coil spring is broken, welded or cracked.

C. Reject vehicle if a rubber spring is missing.

D. Reject vehicle if any leaf is displaced in a manner that could result in contact with a tire, rim, brake drum or frame.

E. Reject vehicle if a torsion bar spring in a torsion bar suspension is broken.

F. Reject vehicle if an air suspension is deflated, such as a leak, system failure, etc.

2. TORQUE, RADIUS, OR TRACKING COMPONENTS

A. Reject vehicle if any part of a torque, radius, or tracking component assembly or any part used for attaching these to the vehicle frame or axle is cracked, loose, broken, or missing.

B. Reject vehicle if walking beam, trunion, spring hangers, spring chairs, bushings, bearing, or rubbers, are worn. Refer to manufacturer's specifications.

200.40 FRAME AND BODY COMPONENTS

1. FRAME MEMBERS

A. Reject vehicle if any frame member is cracked, broken, loose, sagging, or rusted to the point of structural weakness.

B. Reject vehicle if any fasteners, including fasteners attaching functional components such as engine, transmission, steering gear, suspension, body parts, or fifth wheel, are cracked, loose, or missing.

C. Reject vehicle if welds have not been done in a professional manner.

D. Reject vehicle if accessories are not bolted securely.

2. TIRES AND WHEEL CLEARANCE

Reject vehicle if any portion of the body or frame is positioned in a manner likely to contact a tire or any part of a wheel assembly.

3. ADJUSTABLE AXLE ASSEMBLIES (SLIDING SUBFRAMES)

A. Reject vehicle if any locking pins are missing, worn, or not engaged.

B. Reject vehicle if any pin guide holes are cracked or excessively elongated.

C. Reject vehicle if the pin release handle is missing a locking device.

4. REAR END PROTECTION AND BUMPERS

A. Reject vehicle if rear end protection is absent or is not structurally sound, if the vehicle is required to have such rear end protection. (For additional information, refer to 49 CFR §393.86).

B. Reject vehicle if, on a vehicle originally equipped with bumpers, the bumpers are missing or not securely attached.

5. BODY COMPONENTS

A. Reject vehicle if any body exterior component or sheet metal part is rusted, modified and/or damaged to an extent that may present a safety hazard to occupants, pedestrians, cyclists or other vehicles.

B. Reject vehicle if any exterior body component directly surrounding and leading to the passenger compartment has any hole caused by damage, modification or rust. Surface rust is not a cause for rejection.

C. Reject vehicle if any other exterior body components, including fenders, quarter panels, and side panels, is loose, missing, or is not securely attached to the body as a result of damage, rust, modification or missing parts.

D. Reject vehicle if, on a vehicle with unit construction, the body is rusted or modified to the extent that there is a danger of a vital part failure.

E. Reject vehicle if the hood latch mechanism fails to operate properly.

F. Reject vehicle if the sleeper compartment gasket is not properly sealed and secured so as to prevent suction of exhaust fumes or gases into the sleeper.

G. Reject vehicle if a replacement repair on any motor vehicle is not made with material(s) of the same strength as the original, or allows the passage of fumes or gases into the passenger or sleeper compartments.

H. Reject vehicle if; a hole in the floor pan, sleeper, and passenger compartment was not repaired with material(s) of equal strength, if the repair was not securely fastened, or if the repair was not sealed to prevent the passage of fumes and gases.

I. Reject vehicle if any door has an inoperable latch, broken or worn hinges, broken or missing parts, or is wired shut or secured.

J. Reject vehicle if it is equipped with a dump body, and does not have a positive means of support, permanently attached and being capable

of being locked in a position to prevent the unintentional lowering of the dump body.

200.45 TIRES, WHEELS AND RIMS

1. TIRES ON STEERING AXLE OF A POWER UNIT

A. Reject vehicle if any tire has less than 4/32 inch tread when measured at any point on a major tread groove.

B. Reject vehicle if body ply or belt material is exposed through the tread or sidewall on any tire.

C. Reject vehicle if there is any tread or sidewall separation on any tire.

D. Reject vehicle if there is any cut that exposes ply or belt material on any tire.

E. Reject vehicle if any tire is labeled “Not for Highway Use” or displays other markings that would indicate that the tire is not intended for use on a public way or on a steering axle.

F. Reject vehicle if there is a tube type radial tire without radial tube stem markings. These markings include a red band around the tube stem, the word “radial” embossed in metal stems, or the word “radial” molded in rubber stems.

G. Reject vehicle if the vehicle has a mix of bias and radial tires on the same axle.

H. Reject vehicle if a tire flap protrudes through a valve slot in the rim and touches a stem.

I. Reject vehicle if it has a re-grooved tire. Vehicles that are operated exclusively in urban or suburban service are exempt from this requirement. (See 49 CFR §393.75(e)). No truck or truck tractor shall be operated with re-grooved tires on the front wheels which have a load carrying capacity equal to or greater than that of 8.25-20 8 ply.

J. Reject vehicle if it has a boot, blowout patch or other ply repair.

K. Reject vehicle if the weight carried exceeds the tire load limit. This includes overloaded tires resulting from low air pressure.

L. Reject vehicle if a tire is flat or has a noticeable or detectable leak.

M. Reject any bus equipped with recapped or re-treaded tires.

N. Reject a vehicle if any tire is so mounted or inflated that it comes in contact with any part of the vehicle.

2. TIRES LOCATED ON AXLES OTHER THAN STEERING AXLE (POWER UNIT)

A. Reject vehicle if the weight carried exceeds the tire limit. This includes overloaded tires resulting from low air pressure.

B. Reject vehicle if a tire is flat or has a detectable air leak.

C. Reject vehicle if body ply or belt material is exposed through the tread or sidewall.

D. Reject vehicle if there is any tread or sidewall separation.

E. Reject vehicle if there is a cut or crack that exposes ply or belt material.

F. Reject vehicle if a tire is so mounted or inflated that it comes in contact with any part of the vehicle. This includes a tire that contacts its mate.

G. Reject vehicle if any tire is labeled “Not for Highway Use” or displays other markings that would indicate that the tire is not intended for use on a public way.

H. Reject vehicle if a tire has less than 2/32 inch tread when measured at any point on a major tread groove.

3. WHEELS AND RIMS

A. Lock or Slide Ring

Reject vehicle if a lock or slide ring is bent, broken, cracked, improperly seated, or sprung, or has mismatched rings.

B. Wheels and Rims

Reject vehicle if a wheel or rim is cracked, broken, or has elongated bolt holes.

4. FASTENERS (SPOKE OR DISC WHEELS)

A. Reject vehicle if any fastener is loose, missing, broken, cracked, stripped, or is otherwise ineffective. Parts shall be designed and installed so that nuts shall be fully engaged.

B. Reject vehicle if the rim design is not compatible with the hub design.

5. WELDS

A. Reject vehicle if any weld attaching the disc wheel disc to rim is cracked.

B. Reject vehicle if any weld attaching a tubeless demountable rim to adapter is cracked.

C. Reject vehicle if there is any weld on an aluminum wheel on a steering axle.

D. Reject vehicle if there are any welded repair other than disc to rim attachment on steel disc wheel(s) mounted on the steering axle.

200.50 VEHICLE GLAZING: WINDSHIELD, SIDE AND REAR WINDOWS

1. GENERAL

A. Reject vehicle if it is not equipped with approved safety glass wherever glass is used in doors, windows, and windshields, if the vehicle was manufactured after December 31, 1937..

B. Reject vehicle if glass has been removed, if the vehicle was manufactured with glass windshield or windows.

C. Reject vehicle if the glass used in the windshield is other than AS1 rated glass.

D. Reject vehicle if the glass used in the side or rear windows is other than AS1 or AS2 rated glass.

E. Reject vehicle if a windshield repair impairs the vision in the critical vision area.

2. CLOUDINESS

A. Reject vehicle if cloudiness or discoloration extends more than 2 inches from the top or 1 inch from the sides or more than 4 inches from the bottom edge of the windshield.

B. Reject vehicle if, on a divided windshield, the cloudiness or discoloration extends more than 1 inch on either side of the divider strip.

3. CRACKS, SCRATCHES AND MARKS

A. Reject vehicle if any bull’s eye fracture, star fracture, stone bruise, crack or chip within the critical vision area measures more than 3/4

inch at its extreme edge as long as it not closer than 3 inches to a similarly damaged area.

B. Reject vehicle if any crack is more than 6 inches long if it is in a location other than the area in which cloudiness is permitted.

C. Reject vehicle if a windshield wiper scratch, mar, or mark is more than 4 inches long and 1/4 inch wide and in the opinion of the inspecting technician obstructs the driver's clear view of the road..

4. VISION OBSCUREMENT

A. Reject vehicle if unauthorized material or other obstructions obscure the driver's clear view from any window.

B. Reject vehicle if the windshield or any window adjacent to a passenger seat is covered or coated with any material or substance contrary to Maine law or this Chapter.

5. SIDE WINDOWS

A. Reject vehicle if any cloudiness or defect obstructs the driver's view.

B. Reject vehicle if either left or right front window mechanisms are not working properly.

6. REAR WINDOWS

A. Reject vehicle if any rear window is covered or coated with any material or substance which changes the clear color, unless adequate vision (minimum of 200 feet) is provided to the rear by proper outside mirrors located on the driver's side and passenger side.

B. Reject vehicle if the glass is broken or shattered to the extent that it is likely to obstruct the vision of the operator or endanger an occupant of the vehicle.

200.55 SEATS AND RESTRAINT SYSTEMS

1. SEATS

A. Reject vehicle if any seat is loose or if the seat frame is broken.

B. Reject vehicle if the seat adjusting mechanism does not operate properly or will not lock into position.

2. SAFETY BELT(S)

A. Reject vehicle if any safety belt is not installed as originally manufactured.

B. Reject vehicle if any safety belt is missing, frayed, not securely mounted, or if the webbing of the belt is torn.

C. Reject vehicle if any lap belt is not attached to the seat and a secondary belt from the seat to the floor, if vehicle is equipped with an air ride seat.

D. Reject vehicle if any retractor fails to retract or does not allow the belt to extend to the maximum length.

3. AIRBAG(S) (IF EQUIPPED)

A. Reject vehicle if, with the engine running, any diagnostic light or malfunction code indicates that an air bag is not functioning properly.

B. Reject vehicle if any air bag diagnostic light fails to illuminate as designed with the ignition key in the on position when the engine is not running.

C. Reject vehicle if a deployed air bag has not been properly replaced with a functioning air bag system.

D. Reject vehicle if the air bag has been disconnected, and/or a non-factory disconnect switch has been installed, unless the vehicle owner has a letter of authorization from the National Highway Traffic Safety Administration.

200.60 OTHER VEHICLE EQUIPMENT

1. WINDSHIELD WIPERS

A. Reject vehicle if it is not equipped with an adequate wiper or wipers. If the vehicle was provided with two wipers as standard factory equipment, both must be in working order.

B. Reject vehicle if a wiper does not operate freely or at a reasonable speed.

C. Reject vehicle if a wiper blade has dead or worn rubber or if metal makes contact with the windshield.

D. Reject vehicle if the driver cannot reach and operate freely a hand wiper if the vehicle is not equipped with automatic wipers.

E. Reject vehicle if windshield washer system is inoperable, if originally equipped.

2. REAR VIEW MIRRORS

A. Reject vehicle if it is not equipped with at least two rear view mirrors.

B. Reject vehicle if any mirror is not mounted securely to prevent swinging and excessive vibration.

C. Reject vehicle if any mirror does not give the driver a view of the road 200 feet to the rear.

D. Reject vehicle if a reflecting surface is peeled, cracked, tarnished, clouded or broken.

E. Reject vehicle if the mirrors cannot be adjusted to a set position, or will not maintain a fixed position.

3. SUNVISOR

A. Reject vehicle if it is not equipped with a sun visor on the driver's side.

B. Reject vehicle if the sun visor does not maintain a fixed position.

4. HORN

A. Reject vehicle if the activating device is not readily accessible to the driver or does not function as intended.

B. Reject vehicle if the horn is not clearly audible or does not operate.

5. SPEEDOMETER

Reject vehicle if speedometer fails to operate properly.

200.70 TRAILERS AND SEMI-TRAILERS

1. BRAKES

A. SERVICE BRAKES

(1) Reject vehicle if there is an absence of braking action on any required brake(s).

(2) Reject vehicle if there are any missing or broken mechanical components including: shoes, lining pads, springs, anchor pins, spiders, cam rollers, push-rods, S-cams, and air chamber mounting bolts.

(3) Reject vehicle if there are any loose brake components including air chambers, reservoirs, spiders, valves, and camshaft support brackets.

(4) Reject vehicle if there is any audible air leak at brake chamber (Example; ruptured diaphragm, loose chamber clamp, etc.).

(5) Reject vehicle if there is a mismatch across any axle of air chamber size or slack adjuster length.

(6) Reject vehicle if any brake is past the readjustment limit. Stroke shall be measured with engine off and reservoir pressure of 90 to 100 p.s.i. with brakes fully applied.

B. BRAKE DRUMS AND ROTORS

(1) Reject vehicle if there are any external cracks or if there are cracks that open upon brake application. Do not confuse short hairline heat cracks with flexural cracks.

(2) Reject vehicle if any portion of the drum or rotor is missing or in danger of falling away.

(3) Reject vehicle if any drum or rotor is worn beyond the manufacturer’s specifications.

C. BRAKE HOSES AND TUBING

(1) Reject vehicle if there is any hose with damage that is through the outer reinforcement ply.

(2) Reject vehicle if any hose bulges or swells when normal air pressure is applied.

(3) Reject vehicle if there are any audible leaks.

(4) Reject vehicle if two hoses are improperly joined (such as a splice made by sliding the hose ends over a piece of tubing and clamping the hose to the tube).

(5) Reject vehicle if any air hose is cracked, broken or crimped.

(6) Reject vehicle if any tubing is cracked, damaged by heat, broken or crimped.

D. ELECTRIC BRAKES

Note: When checking electric brakes on trailer or semi-trailer, tow vehicle or equivalent substitution should be utilized.

(1) Reject vehicle if there is an absence of braking action on any wheel.

(2) Reject vehicle if trailer or semi-trailer is required by 49 CFR part 393 to have a properly functioning device to activate the brakes in the event of a breakaway from the towing vehicle, and device is not present, or if any component of the device is missing, fails to function properly, or if the breakaway device battery has a voltage level of less than 12.4 volts.

NOTE: Vehicles or combinations of vehicles with a gross vehicle weight rating or gross weight of 10,001 pounds or more, engaged in commerce or otherwise subject to Federal Motor Carrier Safety Regulations must meet the requirements of 49 CFR Part §393. Technicians are directed to these regulations for complete requirements and specifications.

2. LIGHTING DEVICES

A. TURN SIGNAL SYSTEM

(1) Reject vehicle if any signal lamp is missing or fails to operate properly in a vehicle that was originally manufactured on or after January 1, 1953 and was equipped with turn signals.

(2) Reject vehicle if any signal lamp lens is broken or missing.

(3) Reject vehicle if any signal lamp lens is not red or amber to the rear. Amber rear turn signals must not be wired together with parking or marker lights so as to be steadily illuminated.

(4) Reject vehicle if any electrical connection is not tight and secure, or show signs of excessive corrosion, or if any bare wire is exposed on the connection terminals.

(5) Reject vehicle if the signal lamp housing is not securely fastened.

(6) Reject vehicle if any required signal lamp fails to operate properly with each throw of the switch.

B. STOP LAMPS

(1) Reject vehicle if any stop lamp does not produce a steady or pulsating red light to the rear with the brakes applied.

(2) Reject vehicle if a lens is broken or is not red.

(3) Reject vehicle if the lamp housing is not securely fastened.

C. REAR LAMPS, LICENSE PLATE LAMPS, REAR LAMP COMBINATIONS, AND REFLECTOR(S)

(1) Reject vehicle if the tail light bulbs do not produce sufficient light so as to be visible from a distance of 100 feet or more behind the vehicle.

(2) Reject vehicle if all the taillights do not produce a red light.

(3) Reject vehicle if any tail light is broken, missing, discolored, or does not fit properly.

(4) Reject vehicle if the lamps are not securely mounted in the center or to the left of the axis.

(5) Reject vehicle if any lamp does not operate properly.

(6) Reject vehicle if the license plate light bulbs do not produce sufficient steady white light to illuminate the entire rear license plate from a distance of 50 feet to the rear.

(7) Reject vehicle if the lamp housing is not securely fastened.

(8) Reject vehicle if all tail and rear plate lights do not operate properly in all switch positions.

(9) Reject vehicle if temporary repairs are made with colored tape.

(10) Reject vehicle if rear lights are obstructed in any way.

(11) Reject vehicle if all lighting devices and reflectors do not meet requirements of applicable federal or state laws. Inspection Technicians should note that trailers or semi-trailers used in commerce might be subject to 49 CFR Part 393.

(12) Reject vehicle if there is not at least one (1) red reflector securely attached to the rear of the vehicle. The reflector may be part of a rear lamp.

(13) Reject vehicle if equipped with LED lights and 50% or more of the LEDs are not functioning.

D. WIRING AND SWITCHES

(1) Reject vehicle if any wiring is broken, abraded to the point of showing bare wire, or shows evidence of burning or short-circuiting.

(2) Reject vehicle if the wiring is in poor condition, is improperly installed, or is so located as to incur damage.

(3) Reject vehicle if any connection is loose or shows signs of excessive corrosion.

3. TIRES, WHEELS, RIMS, AND WELDS

A. Reject vehicle if the weight carried exceeds tire load limit. This includes overloaded tires resulting from low air pressure.

B. Reject vehicle if any tire is flat or has a detectable leak.

C. Reject vehicle if any tire has body ply or belt material exposed through the tread or sidewall.

D. Reject vehicle if any tire has any tread or sidewall separation.

E. Reject vehicle if any tire has a cut where ply or belt material is exposed.

F. Reject vehicle if any tire is mounted or inflated so that it comes in contact with any part of the vehicle. (This includes one tire of a dual wheel set that contacts the other).

G. Reject vehicle if any tire is marked “Not for highway use” or has similar language indicating that it is not intended for use on a public way.

H. Reject vehicle if any tire has less than 2/32 inch tread when measured in accordance with Maine law.

I. Reject vehicle if any wheel uses a lock or side ring, and that lock or side ring is bent, broken, cracked, improperly seated, sprung or uses mismatched ring(s).

J. Reject vehicle if any wheel or rim is cracked, broken, or has elongated bolt holes.

K. Reject vehicle if any fastener (spoke and disc wheels) has any loose, missing, broken, cracked, stripped or otherwise ineffective fasteners.

L. Reject vehicle if there are any cracks in welds used to attach a disc wheel to a rim.

M. Reject vehicle if there is any crack in a weld attaching tubeless demountable rim to an adapter.

N. Reject vehicle if there is any welded repair on an aluminum wheel on a steering axle.

O. Reject vehicle if there is any welded repair other than disc to rim attachment on steel disc wheel(s) mounted on the steering axle.

4. AXLES AND SUSPENSION

A. Reject vehicle if there is any U-bolt(s), spring hanger(s), or other axle positioning part(s) that is cracked, broken, loose or missing that results in the shifting of an axle from its normal position. (After a turn, lateral axle displacement is normal with some suspensions. Forward or rearward operation in a straight line will cause the axle to return to alignment).

B. Reject vehicle if any leaves in a leaf spring assembly are broken, missing or welded.

C. Reject vehicle if any coil spring is broken, welded or missing.

D. Reject vehicle if any rubber spring is missing or broken.

E. Reject vehicle if one or more leaves are displaced in a manner that could result in contact with a tire, rim, brake drum or frame part.

F. Reject vehicle if there is a broken torsion bar spring in a torsion bar suspension.

G. Reject vehicle if there is noticeable deflation in the air suspension system, i.e. system failure, leak, etc.

5. FRAMES

A. Reject vehicle if any frame member is cracked, broken, loose, or sagging.

B. Reject vehicle if there are any loose or missing fasteners, including fasteners attaching functional components.

C. Reject vehicle if there exists a condition likely to cause the body or frame of the trailer or semi-trailer to contact a tire or any part of a wheel assembly.

6. COUPLING DEVICES AND DRAWBAR / TOWBAR EYE.

A. Mounting to Frame

(1) Reject vehicle if any fasteners are missing or ineffective.

(2) Reject vehicle if there is any movement between mounting components.

(3) Reject vehicle if any mounting angle iron cracked or broken.

B. Mounting Plates

(1) Reject vehicle if there are any missing or ineffective fasteners.

(2) Reject vehicle if there are any welds or “parent metal” is cracked.

(3) Reject vehicle if there is more than 3/8 inch of horizontal movement between the pivot bracket pin and bracket.

(4) Reject vehicle if there are any cracks in the attachment welds.

(5) Reject vehicle if the kingpin is loose, broken, deformed, cracked, has 1/8 inch wear or more, or is field welded, unless the kingpin has been remanufactured using a process certified by a professional engineer.

(6) Reject vehicle if the upper fifth wheel plate is cracked, loose, warped, or worn so that an area less than 75% is in contact with the lower fifth wheel plate.

(7) Reject vehicle if the fifth wheel’s attaching members are rusted so that the fifth wheel plate may become detached.

C. Drawbar / Towbar Eye

(1) Reject vehicle if any part of the eye is reduced by more than 20%.

(2) Reject vehicle if there are any cracks in the drawbar or towbar.

(3) Reject vehicle if there are any cracks in the attachment welds.

7. SPLASHGUARDS

Reject vehicle if trailer or semi-trailer is not equipped with suitable guards that will effectively reduce the spray or splash of mud, water or slush caused by the rear wheels.

8. REAR END PROTECTION

Reject vehicle if the trailer or semi-trailer is required under federal regulation (49 CFR 393.86) to be equipped with rear end protection, and such protection is absent or is not structurally sound.

9. RETRO REFLECTIVE SHEETING AND REFLEX REFLECTOR

Reject vehicle if the trailer or semi-trailer is required under federal regulation (49 CFR 393.13) to be equipped with retro reflective sheeting or an array of reflex reflectors, and the sheeting or reflectors are not present.

NOTE: Vehicles or combinations of vehicles with a gross vehicle weight rating or gross weight of 10,001 pounds or more, engaged in commerce or otherwise subject to Federal Motor Carrier Safety Regulations must meet the requirements of 49 CFR Part §393. Technicians are directed to these regulations for complete requirements and specifications.

200.75 SPECIAL MOBILE EQUIPMENT

1. INSPECTION

A. Special mobile equipment that is required to be registered must be inspected annually. Pieces of special mobile equipment that operate on tracks or exclusively off road are exempt from this requirement.

B. Special mobile equipment is subject to a partial inspection. A partial inspection checks for the adequacy of the following;

(1) Brakes
(2) Lights (if originally so equipped)
(3) Steering system components
(4) Drive lines
(5) Tires and wheels
(6) Engine and exhaust system
(7) Hydraulic and cable controls
(8) Any other mechanical parts or body components that may effect the safe operation of such equipment.

C. If a piece of special mobile equipment has passed inspection, a Class D inspection sticker shall be issued and shall be placed either in the lower left corner of the windshield or in the center of the windshield behind the rear view mirror. If the equipment is not normally equipped with a windshield, the inspection sticker shall be kept with the special mobile equipment registration.

D. Fee information for Special Mobile Equipment can be obtained in additionally provided material or from the State Police Inspection Unit online.

E. A commercial vehicle report, as described in this Chapter is not required for partial inspections of special mobile equipment.

2. SPECIAL MOBILE EQUIPMENT OWNERS' OPTIONS AND RESPONSIBILITIES

A. A special mobile equipment owner may inspect his own special mobile equipment if he owns a licensed fleet inspection station.

B. A special mobile equipment owner or a person in his employ must be a certified Inspection Technician to conduct the inspection of special mobile equipment.

C. A special mobile equipment owner who does not own a licensed fleet inspection station may have his special mobile equipment inspected at any Class D inspection station by a certified Class D Inspection Technician.

D. A special mobile equipment owner may have a certified Class D Inspection Technician come to the owner's place of business or to the place where the special mobile equipment is located to conduct the inspection.

200.80 PERIODIC INSPECTION RECORD KEEPING REQUIREMENTS

NOTE: These requirements may apply to a motor vehicle or combination of vehicles that exceed 10,000 pounds gross vehicle weight and are engaged in intra or interstate commerce.

1. PREPARATION OF REPORTS

A. The qualified Technician performing the inspection shall prepare a report, which includes the items listed below. Vehicles <u>not</u> in commerce such as motor homes and municipal vehicles do not require this report.

B. The report shall include;

(1) Information to identify the Technician performing the inspection, including the Technician's printed or typed name and signature.

(2) Information that identifies the registered owner of the vehicle.

(3) Information that identifies the motor carrier operating the vehicle, if other than the registered owner.

(4) Information regarding the date and location of the inspection.

(5) Information regarding the registration plate number and vehicle identification number of the vehicle being inspected.

(6) Information that identifies the vehicle components inspected and describes the results of the inspection, including the identification of those components not meeting the minimum standards set forth in this Chapter.

(7) Information certifies the accuracy and completeness of the inspection as complying with all the requirements of this Chapter.

2. HANDLING OF REPORT

A. The original or a copy of the inspection report shall be retained by the motor carrier for a period of 14 months. The inspection report shall be retained where the vehicle maintenance records are kept. For the purposes of this rule, the motor carrier shall be the carrier under whose control the vehicle operates for 30 consecutive days or more.

B. A copy of the inspection report must be retained by the inspection station.

C. The inspection station shall provide a third copy of the inspection station that may be kept with the vehicle.

Maine State Police Inspection Unit

Application and Product Fee Information as of 12/15/06

Inspection Technician Application Fee		$1.00
SBI Fee (criminal history check)	Required for the following applications: ▪ Inspection Technician ▪ Inspection Technician Renewal ▪ Inspection Station – owners and on-site managers	$21.00
Inspection manual	This reference contains agency rules regarding the inspection of motor vehicles and the inspection program (16-222 Chapter 1), as well as other reference information.	$12.00
Window Tint Certificates	Package of 50	$5.00
Commercial Vehicle Inspection Forms *(Periodic Inspection Report)*	Package of 50	$5.00
Inspection Stickers	Each	$2.50

Inspection Fee information

Note: Fees for inspections are set in statute (29-A MRSA Chapter 15) and are re-printed for ease of reference. The description of the inspection classification is summarized from statute and/or rule. The reader in encouraged to consult the applicable statute or rule for full understanding of the information.

Type	***Description***	***Fee***
Class A Inspection	▪ All motor vehicles under 10,001 lbs. ▪ At the station's option, any motor vehicle between 10,001 and 26,000 lbs without air brakes and **not** used in commerce	Not more than $12.50
	▪ At the station's option, any motor vehicle between 10,001 and 26,000 lbs without air brakes and used in commerce	Hourly labor rate
Class B Inspection	▪ School bus	$8.00
Class C Inspection	▪ Motorcycle	Not more than $12.50*
Class D Inspection	▪ Vehicles with GVWR of 10,001 lbs or more and **not** used in commerce. Such as motor homes and public works vehicles etc.	Not more than $12.50
	▪ Vehicles with GVWR of 10,001 lbs or more and used in commerce	Hourly labor rate
Class E Inspection	▪ Enhanced inspection of gasoline powered vehicles required to be registered in Cumberland County, or any other gasoline power vehicles at owner's request. ▪ Excluding motorcycles and school buses	Not more than $12.50 for pre – 1974 vehicles Not more than $15.50 for 1974-1995 model year vehicles Not more than $18.50 for 1996 and subsequent model year vehicles

*Fee as recommended by Maine State Police, Motor Vehicle Inspection Unit

TO: **Inspection Stations**
FROM: **Motor Vehicle Inspection Unit**
DATE: **December 15, 2006**
RE: **2007-2008 Inspection Stickers and new inspection rules**
Finally, the new rules have been adopted and become effective DECEMBER 15th 2006.

Below is a copy of a sticker stub of a 2007-2008 inspection sticker. You will notice a few differences from previous year stubs. The purpose of this memorandum is to explain what information you will need to fill in. SEE BELOW:

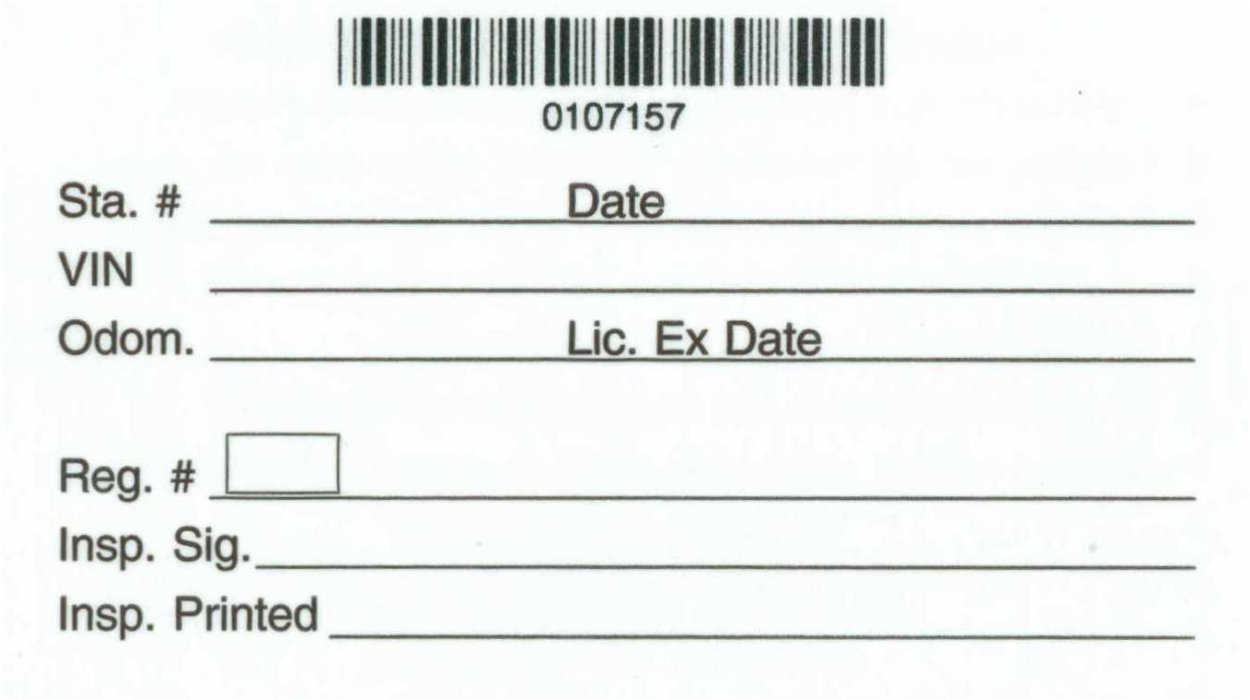

- Sta. # = Station number
- Date = Date of inspection
- VIN = Vehicle Identification Number
- Odom. = Current mileage
- Lic. Ex. Date = Inspection Technician's license (inspection mechanic's license) expiration date
- Insp. Sig. = Inspection Technician's full signature
- Insp. Printed = Inspection Technician's full name printed

INSTRUCTIONS FOR USE OF INSPECTION REFUSAL FORM

The sample defect documentation form on the reverse side of this page was prepared for your convenience. You may copy this as many times as you would like to fill out and give to your customers if their vehicle is rejected for inspection.

Do not send these reject forms or information to the Maine State Police Motor Vehicle Inspection Unit.

Tell your customer that you are providing the defect form so they know why their vehicle failed inspection. Tell them that the defect form is for their own information only and that they are ***not*** to send the defect form to the State Police after the repairs are made.

There is no requirement that you use the defect form we have provided. You may create your own defect form or utilize the systems that you already have in place to give a written reason as to why the vehicle failed inspection. We are aware that many stations have a computer-generated printout that they can give customers explaining the reason(s) why the vehicle was rejected. You may continue this practice.

Questions may be directed to the Maine State Police Motor Vehicle Inspection Unit at 624-8939.

Effective date 12-15-2006

MAINE STATE POLICE
MOTOR VEHICLE INSPECTION UNIT
20 State House Station, Augusta, ME 04333
207-624-8939

MAINE STATE INSPECTION REFUSAL RECORD

VEHICLE INFORMATION

Vehicle Owner: _____ Address: _____

Vehicle being refused: _____ _____ _____ _____
Year Make Model Color

_____ / _____ / _____
Plate # VIN # Mileage

STATION INFORMATION

Station # _____

Date Inspected: _____

Station Name and Address: _____

Inspecting Technician: _____

REASON(S) FOR REFUSAL

_____

_____

_____

_____

INSTRUCTIONS TO INSPECTION TECHNICIAN: After determining that the vehicle fails for inspection, fill out this sheet and cut the old inspection sticker diagonally. Remove the portion of the sticker that does not display the month of expiration as shown below.

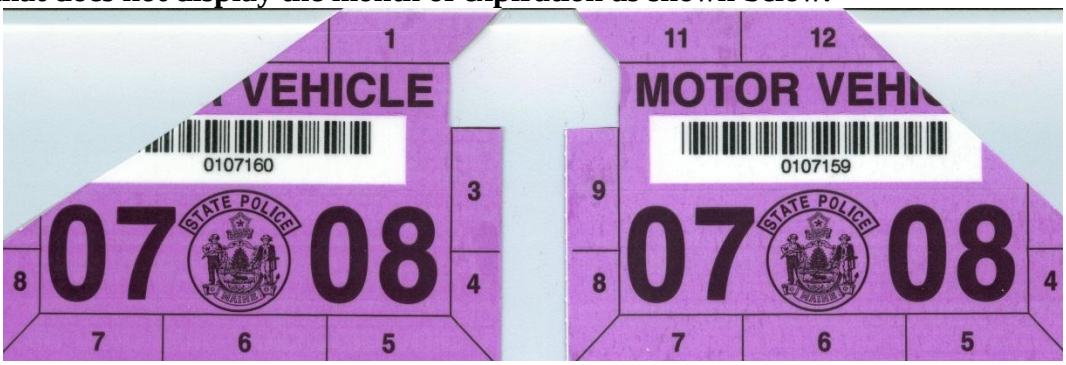

NOTICE TO OPERATOR: A diagonally cut inspection sticker will remain valid until its normal expiration. The defect(s) must be corrected and the vehicle must be re-inspected. Operation of this vehicle until the defect(s) is corrected is at the operator's risk and may be a violation of law.

USE THIS CHART FOR REGISTRATION CODES ON INSPECTION STICKERS

REGISTRATION TYPE	***CODE***	***REGISTRATION TYPE***	***CODE***
Agriculture (passenger car)	**AG**	Horseless Carriage (Model A or T)	**HC**
Agriculture (commercial)	**AC**	Island Use	**IU**
Agriculture (farm)	**AF**	Lobster	**LB**
Animal Welfare	**AW**	Lobster Commercial	**LC**
Antique	**AQ**	Low Speed	**LS**
Antique Motorcycle	**MQ**	Medal of Honor	**MO**
Apportioned	**AP**	Modified Vehicle	**CV**
Autocycle	**AU**	Moped	**MP**
Black Bear	**BB**	Motorcycle	**MC**
Breast Cancer Support	**BC**	Motor Home	**MH**
Bus	**BU**	Municipal (city / county)	**CI**
Combination (passenger/commercial)	**CM**	Municipal Motorcycle	**MM**
Conservation	**CN or CR**	Over limit permit (CVEU)	**PE**
Conservation Commercial	**CC**	Over limit permit by LIC (CVEU)	**PL**
Conservation Disabled(handicapped)	**CD**	Passenger Car	**PC**
Conservation Trailer	**CL**	Pearl Harbor Survivor	**PS**
Conservation Motor Home	**RV**	Prisoner Of War	**PO**
Commercial	**CO**	Purple Heart	**PH**
County Sheriff's Departments	**CS**	Purple Heart Motorcycle	**PM**
Dealer	**DL**	Special Equipment	**SE**
Disability Special Vet	**DS**	Special Veterans Motorcycle	**VM**
Disabled (handicapped)	**DX**	State Vehicle	**ST**
Disabled Motorcycle (handicapped)	**MX**	Street Rod	**SR**
Disabled Motor Home (handicapped)	**WX**	Support Our Troops	**TS**
Disabled Veteran	**DV**	Support Wildlife (Sportsman Specialty)	**SW**
Disabled Veteran Motorcycle	**XV**	Tractor	**TR**
Disabled Veteran Parking Plate	**VX**	Trailer	**TL**
Emergency/Ambulance/Coach	**AM**	Trailer (starting with 800 series)	**TT**
Farm Vehicle (farm use only)	**FM**	Truck Mounted Campers	**TC**
Firefighter	**FD**	University of Maine	**UM**
Hire (taxi)	**TX**	Veteran	**VT**
Gold Star Family	**GS**	Wabanaki	**WB**

PARTIAL INSPECTIONS

1. **Partial inspection** means an inspection that consists of running gear, steering, brakes, exhaust system and lights. Running gear means the wheels, axles, springs, and frame of a vehicle. If a vehicle has no windshield, the inspection sticker shall be kept with the registration certificate.

2. **Limited use farm trucks** that bear the name of the municipality in which excise tax is paid and which are operated within a 20-mile radius from the main entrance of the farm where the vehicle is customarily kept are subject to the partial inspection listed above. In addition, limited use farm trucks must meet the safety glass requirements of 29-A MRSA § 1915 and safe tire requirements of 29-A MRSA § 1917.

3. **Fish trucks** that bear the name of the municipality in which excise tax is paid and which are operated within a 20-mile radius of the municipality in which excise tax is paid are subject to the partial inspection listed above. In addition, fish trucks must meet the safety glass requirements of 29-A MRSA § 1915 and visual tire requirements of 29-A MRSA § 1917 (3).

4. **Woods tractors** that are registered pursuant to 29-A MRSA §509 or are exempt from registration and which are operated only during daylight hours, and only within a 10 mile radius of the premises where the tractor is customarily kept, and only between those premises and a woodlot used for the logging purposes by the owner and a filling station or garage for fuel or repairs, is subject to the partial inspection listed above. In addition, woods tractors are subject to the visual tire requirements of 29-A MRSA § 1917 (3). Woods tractors are exempt from the inspection of lights as listed in the partial inspection.

VEHICLES REGISTERED IN A FOREIGN STATE

Any vehicle registered in a foreign state may, at the discretion of the owner or operator, may have a Maine safety inspection at any licensed inspection station for the purposes of obtaining a Maine inspection sticker. If the vehicle passes the inspection, a Maine inspection sticker may be issued and affixed to the vehicle.

TIRE DIAMETER FORMULA

Use this 4 - step formula to calculate approximate overall tire diameter

1. Determine the width of the tire in inches by taking the width in millimeters and dividing by 25.4

2. Multiply the width in inches by the aspect ratio (as a decimal).

3. Multiply that number by two.

4. Add your answer from step 3 to the rim diameter.

Example: 235/45/17

235 = Tire width in millimeters
45 = Aspect ratio
17 = Width of rim in inches

1. 235 Divide by 25.4 = 9.25

2. 9.25 X .45 = 4.16

3. 4.16 X 2 = 8.32

4. 8.32 + 17 = 25.32

Overall diameter = 25.32

HEADLAMP AIMING

All equipment for testing headlamps must comply with the Society of Automotive Engineers Recommended Practice for Headlamp Inspection Equipment.

MECHANICAL AIMER

If a mechanical aimer is used, it shall be in good repair and adjustment, and shall be used according to the manufacturer's instructions and must be calibrated to the slope of the floor on which the vehicle stands.

HEADLAMP TESTING MACHINE

If a headlamp testing machine is used, it shall give results equivalent to those obtained using the screen procedure shown below. It shall be in good repair and adjustment, and shall be used in accordance with the manufacturer's instructions. The machine using a photo-electric cell or cells to determine aim should also have a visual screen upon which the beam pattern is projected proportional to its appearance and aim on a screen at 25 feet. Such visual screen shall be plainly visible to the operator and should have horizontal and vertical reference lines to permit visual appraisal of the lamp beam.

HEADLAMP AIMING BY THE SCREEN METHOD

Locate the vehicle so that it is square with the screen and with the front of the headlamps directly over a reference line, which has been painted on the floor. Next, locate the center line on the aiming screen so that it is in line with the center of the vehicle. This can be done as shown below by sighting through the center of the rear window of the vehicle and over the hood ornament - have vehicle moved until it is in alignment with these two points. If there is no center hood ornament, mark the center of the front and rear windows with narrow strips of masking tape. Use these "sights" to locate the center line of the aiming screen directly in line with the vertical axis.

AIMING AREA REQUIRED

It is desirable to have a specific aiming area in a darkened location. This should be sufficient for the vehicle and an additional 25 feet measured from face of lamps to the front of the visual screen. The floor on which the car rests must be flat, and level with the bottom of the screen. If the floor is not level, compensate.

AIMING SCREEN

If a screen is used, it should be 5' high x 12' wide with a matte white surface well shaded from extraneous light, and properly adjusted to the floor on which the vehicle stands. Provisions may be made for moving the screen so that it can be aligned parallel with the rear axle and so that a horizontal line drawn perpendicularly from the centerline of the screen will pass an equal distance midway between the two headlamps.

The screen shall be provided with a fixed vertical centerline, two laterally adjustable vertical tapes, and one vertically adjustable horizontal tape.

If a regular commercial aiming screen is not available, the screen may consist of a vertical wall having a clear uninterrupted area approximately 6 feet high and 12 feet wide.

The surface should be finished with a washable non-gloss white paint.

After the aiming screen has been set up in its permanent location, it is necessary to paint a reference line on the floor directly under the lens of the lamps to indicate the proper location of the headlamps when they are being aimed.

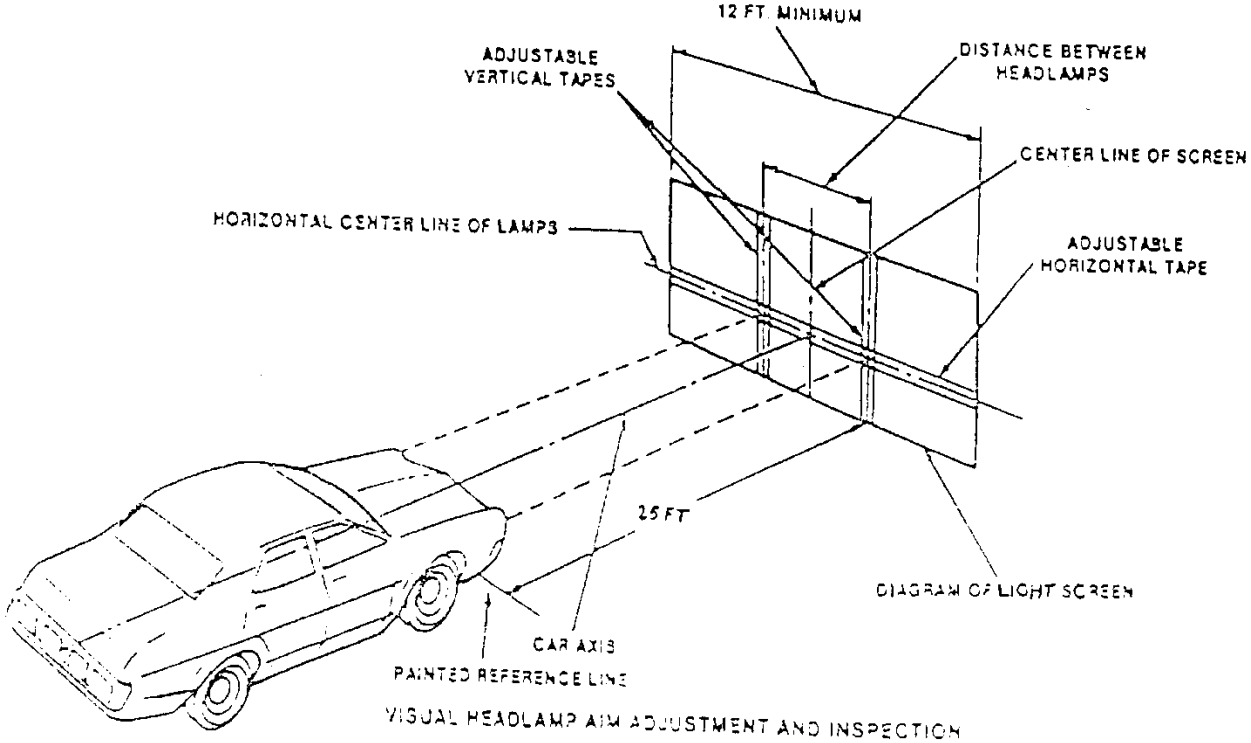

VISUAL HEADLAMP AIM ADJUSTMENT AND INSPECTION

MOTORCYCLE HEADLIGHT AIMING 12.5 Foot Distance

Procedure: Tires must be inflated to the pressure recommended by the manufacturer. Conduct the test with the motorcycle in the upright position, with the rider seated in the normal riding position and the front wheel facing straight ahead. Inspect headlamps on the upper beam.
Vertical Aim: After measuring the height from the floor to the headlamp center, adjust the horizontal line on the chart to the corresponding height. Reject vehicle if the high intensity zone is higher than the horizontal line or more than 4 inches below it.
Lateral Aim: Reject vehicle if the high intensity zone is more than 6 inches right or left of the vertical line.

MOTORCYCLE HEADLIGHT AIMING 25 Foot Distance

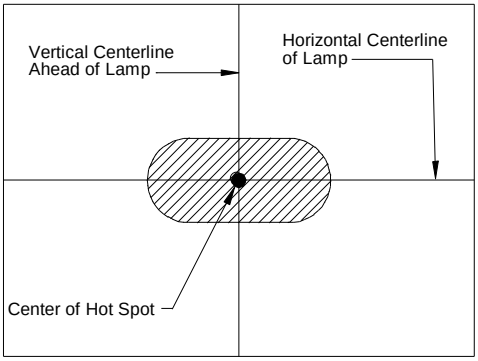

Headlamp Aiming Procedure - High Beam

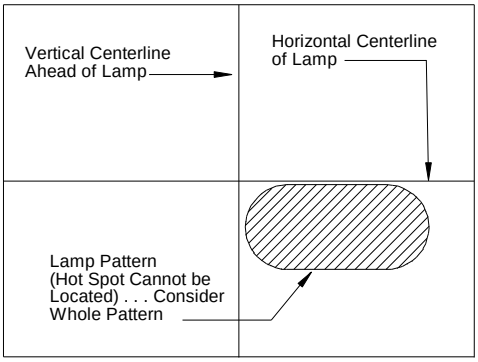

Headlamp Aiming Procedure - Low Beam

Procedure: Tires must be inflated to the pressure recommended by the manufacturer. Conduct the test with the motorcycle in the upright position, with the rider seated in the normal riding position and the front wheel facing straight ahead.

Composite type lamps incorporating both the high and low beam in the same housing should be checked for alignment on the low beam. Alignment tolerances must be within four inches of the horizontal and vertical center.

High beam is aligned with the “hot spot” or center of the high intensity zone centered on the horizontal/vertical axis that is located at the same height as the headlamp at a distance of 25 feet.

Low beam is aligned by locating the beam pattern so the upper edge of the high intensity zone is at the horizontal axis and the left edge of the high intensity zone is at the vertical axis. The low beam “hot spot” will be 2 to 4 inches down and 5 to 8 inches right of the horizontal/vertical axis.

School Bus Recommended Out-of-Service Criteria

Derived from National School Transportation Specifications and Procedures (2005 Revised Edition)

SCHOOL BUS BODY/CHASSIS

ITEM NO.	INSPECTION ITEM	DEFECT
1.00	**BRAKE SYSTEM**	
1.01	ADJUSTMENT	Any one brake beyond the adjustment LIMIT
1.02	AIR SYSTEM	Fails to maintain pressure when: a) the leakage rate (brakes released) exceeds 2psi/min. b) the leakage rate (brakes applied) exceeds 3psi/min. c) fails to recover air pressure as recommended
1.10	**BRAKE SYSTEM (hydraulic)**	
1.11	MASTER CYLINDER & HYDRAULIC SYSTEM	a) reservoir is below minimum level b) any leak of fluid in the brake system
1.12	PEDAL RESERVE	Fails to maintain manufacturer designed height and travel requirements (OEM)
1.13	POWER ASSIST UNIT	Fails to function as designed (OEM)
1.20	**BRAKE COMPONENTS**	
1.21	(AIR and HYDRAULIC)	
1.22	BRAKE HOSES/TUBING	a) brake hose with any damage extending through the outer reinforcement ply b) any bulge or swelling when brakes are applied c) any restriction due to cracked, broken or crimped line/hose d) any line, tubing, hose, or connection that is not constructed to meet all applicable manufacturing codes and standards (i.e. excessive rust)*
1.23	BRAKE LINING	a) any lining/pad worn below minimum thickness b) lining pad is broken, not firmly attached to shoe or plate, or is contaminated with oil or grease c) fails to make contact with drum (frozen, binding, uneven)
1.24	BRAKE CALIPER	a) any brake caliper components missing or excessively loose
1.25	BRAKE DRUM/ROTOR	a) any drum or rotor that is cracked, improperly mounted, or worn beyond manufacturer's discard specifications b) any friction surface is rusted to the point of deterioration*
1.30	**PARKING BRAKE**	a) not present and working as designed

		b) parking brake cable with any damage extending to the inner cable*
1.40	***STEERING SYSTEM***	
1.41	STEERING COLUMN	a) any modification or other condition that interferes with the free movement of any steering component b) any absence or looseness of U - bolt(s) or positioning part(s) c) worn or faulty, or obviously repair-welded universal joint(s) d) steering wheel not properly secured
1.42	FRONT AXLE BEAM	Any crack(s) or obvious welded repair
1.43	STEERING GEAR BOX	a) any mounting bolt(s) loose or missing b) any crack(s) in gear box or mounting brackets c) any obvious welded repair d) excessive wear in input or sector shaft*
1.44	PITMAN ARM	a) any looseness of the Pitman Arm on the steering gear output shaft b) any obvious welded repair
1.45	POWER STEERING	a) auxiliary power assist cylinder loose b) power steering pump inoperable
1.46	BALL and SOCKET JOINTS	a) any movement under steering load of a nut stud b) any motion, other than rotational, between any linkage member and its attachment point of more than 1/8 inch measured with hand pressure only c) any obvious welded repair
1.47	TIE RODS and DRAG LINKS	a) loose clamp(s) or clamp bolt(s) on tie rod or drag links b) any looseness in any threaded joint
1.48	NUTS	Loose or missing fasteners on tie rod, Pitman Arm, drag link, steering arm or tie rod arm
1.49	HOSES AND FLUIDS	Any faulty fluid control device, leak, or empty reservoir
1.50	**SUSPENSION COMPONENTS**	
1.51	AXLE PARTS/MEMBERS	a) any U-bolt or other spring to axle clamp bolt(s) cracked, broken, loose, or missing b) any spring hanger(s), or other axle positioning parts cracked, broken, loose, or missing that results in shifting of an axle from its normal position c) any worn (beyond manufacturer's specifications) or improperly assembled U bolt, shock, king pin, ball joint, strut, air bag and positioning component (OEM)

		d) any spring hanger, assembly part or leaf, broken or missing e) coil spring broken f) any main leaf spring broken* g) any leaf spring is displaced in a manner that could result in contact with a tire, rim, brake drum or frame*
1.60	**CHASSIS/FRAME/UNIBODY**	
1.61	FRAME	a) any cracked, loose, sagging or broken frame siderail b) any obvious bend or damage resulting from a collision c) any worn or loose mounting hole
1.62	CROSS MEMBERS	a) any 3 cross members, outriggers or other structural supports cracked, missing, deformed or has rust holes*
1.63	OUTRIGGERS/BODY SUPPORT	Any missing, broken, shifted or corroded part that would affect the safe operation of the vehicle
1.64	BUMPERS	Any bumper missing or not secured
1.70	**EXHAUST SYSTEM**	
1.71	LEAKS	Any part of the exhaust system that has a measurable leak (audible or felt) or discharges under the passenger or engine compartment
1.80	**FUEL SYSTEM**	
1.81	FUEL CONTAINER/ CONNECTION	a) any fuel tank not securely attached to the vehicle b) any part of the fuel system not properly secured or fastened c) any liquid fuel leak at any point
1.90	**DRIVE SHAFT**	
1.91	DRIVE SHAFT GUARD	Loose, missing, improper placement, or bent guards
1.92	U-JOINTS & CENTER BEARING*	Any worn or faulty or obviously repaired/welded u-joint or center bearing*
2.00	**DIFFERENTIAL**	Cracked or leaking housing
2.10	**ENGINE**	
2.11	COMPONENTS	Any critical component that fails to function as designed
2.12	LEAKS	Any fluid leaks that would affect the safe operation of the engine or constitute a fire hazard*
2.20	**TIRES/WHEELS/HUBS**	
2.21	TIRE TREAD DEPTH	Any front tire worn to less than 4/32 inch or any

		rear tire worn to less than 2/32 inch
2.22	TIRE SIDEWALL	a) any sidewall that is cut, worn, or damaged to the extent that the ply cord is exposed b) any observable bump, bulge, or knot related to sidewall or tread separation
2.23	TIRE INFLATION	Tire is flat or has noticeable leak
2.24	TIRE TYPE	Not of proper type (load range, size, mismatched, etc.)
2.25	WHEELS/RIM/SPIDERS	a) any nuts, bolts, studs, lugs, missing, damaged or loose b) any wheel/rim is cracked, improperly seated, damaged, or welded
2.26	HUB	Excessive wheel bearing or king pin play that exceeds state specifications*
2.30	**ELECTRICAL**	
2.31	WIRING	Any required wire or electrical component charred or showing evidence of being burnt or exposed
2.40	**BATTERY**	
2.41	WIRES	Wiring is exposed, chaffed or loose*
2.42	BATTERY SECUREMENT	Battery not secured
2.50	**WINDSHEILD WIPERS**	Wipers fail to work or is missing. Wiper does not clean windshield sweep area.
2.60	**BODY INTERIOR**	
2.61	PANELS	Any panel (ceiling, side, wheel well, etc.) protruding, having sharp edges, or not secured, that may cause injuries
2.62	FLOORS	Floor pan or inner panels having excessive perforated areas or openings sufficient to cause a hazard to an occupant
2.63	STEP WELL	Any part of the step well or support structure is damaged
2.64	STEP TREADS	Any condition that would present a tripping hazard
2.65	HANDRAIL	a) missing or loose b) fails the nut/drawstring test or has not complied with recall.
2.66	SEATS/BARRIERS	a) any seat/barrier that is not secured properly b) any seat/barrier material so defective that it compromises the integrity of occupant protection and compartmentalization c) seat spacing fails to comply with FMVSS No. 222

2.67	SEAT (Driver)	a) fails to adjust or hold proper adjustment b) any part of the driver's safety restraint assembly is missing, not properly installed or so defective as to prevent proper securement
2.68	DOORS (Service)	a) the service door does not open or close properly b) the door control handle does not lock in the closed position c) door is equipped with a padlock or similar non-OEM locking device. (Excludes vehicles equipped with an interlock system)
2.69	DOORS (Emergency Exits)	a) any emergency door that does not open freely or completely, as designed b) any door(s) warning device that is defective c) door or roof hatch is equipped with a padlock or similar non-OEM locking device (Excludes vehicles equipped with an interlock system) d) doors or exits not as prescribed in the Maine Department of Education Uniform School Bus Standards (Chapter 81)*
2.70	**WINDOWS**	a) any glass or glazing that is broken through or missing b) not of approved type c) windshield has discoloration or other damage in that portion extending upward from the height of the topmost portion of the steering wheel, but not including a 1 inch border at the top and each side of the windshield or each panel thereof, except the following are allowed:* (1) sun-screening or window-tinting material along a 4-inch strip at the top of the windshield* (2) any crack less than ½ inch long if not intersected by any other crack d) driver's side window(s) have cloudiness or defects that obscure the driver's vision*
2.71	WINDOWS (Emergency Exits)	a) any Emergency window that fails to open properly b) lacks the required number of emergency windows/roof hatches. (Fails to comply with FMVSS No. 217) c) required audible warning device(s) not working properly
2.72	DEFROSTERS	Fails to operate
2.80	**BODY EXTERIOR**	
2.81	PANELS, RUB RAILS, TRIM	Any school bus body part that is loose, torn, dislocated or protruding from the surface of the

		bus, creating a hazard
2.82	COMPARTMENT DOORS	Any engine, battery or other doors that are not secured properly
2.83	MIRRORS	Any required mirror missing, broken, discolored or will not hold a set adjustment
3.00	**LAMPS AND SIGNALS**	
3.01	HORN	Fails to function as designed*
3.02	GAUGES/BRAKE WARNING	Any critical brake, telltale light, buzzer or gauge that fails to function as designed
3.03	STOP ARM/OPTIONAL CROSSING DEVICE	Required stop arm(s), or if equipped any crossing control device fails to function properly
3.04	LIGHTS	Any one of the following light circuits not working: Brake, turn signal, tail, marker, head (low beam), or hazard lights*
3.05	WARNING LIGHTS	Any school bus warning lights not working (amber or red) or stop arm lights.*
3.10	**EMERGENCY EQUIPMENT**	
3.11	FIRE EXTINGUISHER	Any required fire extinguisher(s) which is missing, not of proper type / size, not fully charged, has no pressure gauge, is not secured or is not accessible to the driver*
3.12	OTHER STATE OF MAINE REQUIRED EQUIPMENT*	a) first aid kit is missing or empty* b) biohazard kit is missing or empty* c) seat belt cutter is missing* d) emergency reflectors are missing*
3.20	**WHEELCHAIR EQUIPPED VEHICLES**	a) wheelchair lift does not function as designed or is inoperable b) any hydraulic line leaking during lift operation c) wheelchair securement missing or improperly installed loose or damaged d) any required wheelchair occupant restraint system not in compliance with FMVSS No. 222

* Item added or modified to meet Maine State Inspection Standards

Re-printed portion of MRSA Title 29-A of relevance to Motor Vehicle Inspections

The State of Maine claims a copyright in its codified statutes. If you intend to republish this material, we require that you include the following disclaimer in your publication:

All copyrights and other rights to statutory text are reserved by the State of Maine. The text included in this publication reflects changes made through the First Special Session of the 124th Legislature, and is current through December 31, 2009, but is subject to change without notice. It is a version that has not been officially certified by the Secretary of State. Refer to the Maine Revised Statutes Annotated and supplements for certified text. The Office of the Revisor of Statutes also requests that you send us one copy of any statutory publication you may produce. Our goal is not to restrict publishing activity, but to keep track of who is publishing what, to identify any needless duplication and to preserve the State's copyright rights.

PLEASE NOTE: The Revisor's Office cannot perform research for or provide legal advice or interpretation of Maine law to the public. If you need legal assistance, please contact a qualified attorney.

Chapter 15: INSPECTION AND REPAIR

Subchapter 1: INSPECTION HEADING: PL1993, C. 683, PT. A, §2 (NEW); PT. B, §5 (AFF)

29-A §1751. MOTOR VEHICLE INSPECTION

1. **Inspection required.** Except as provided in this chapter or section 2307, subsection 1, a motor vehicle required to be registered in this State must have an annual inspection. A person may have a motor vehicle inspected more frequently.
[1993, c. 683, Pt. A, §2 (NEW); 1993, c. 683, Pt. B, §5 (AFF) .]

2. **Equipment subject to inspection.** The following equipment is subject to inspection:
A. Body components; [1993, c. 683, Pt. A, §2 (NEW); 1993, c. 683, Pt. B, §5 (AFF).]
B. Brakes; [1993, c. 683, Pt. A, §2 (NEW); 1993, c. 683, Pt. B, §5 (AFF).]
C. Exhaust system; [1993, c. 683, Pt. A, §2 (NEW); 1993, c. 683, Pt. B, §5 (AFF).]
D. Glazing; [1993, c. 683, Pt. A, §2 (NEW); 1993, c. 683, Pt. B, §5 (AFF).]
E. Horn; [1993, c. 683, Pt. A, §2 (NEW); 1993, c. 683, Pt. B, §5 (AFF).]
F. Lights and directional signals; [1993, c. 683, Pt. A, §2 (NEW); 1993, c. 683, Pt. B, §5 (AFF).]
G. Rearview mirrors; [1993, c. 683, Pt. A, §2 (NEW); 1993, c. 683, Pt. B, §5 (AFF).]
H. Reflectors; [1993, c. 683, Pt. A, §2 (NEW); 1993, c. 683, Pt. B, §5 (AFF).]
I. Running gear; [1993, c. 683, Pt. A, §2 (NEW); 1993, c. 683, Pt. B, §5 (AFF).]
J. Safety seat belts on 1966 and subsequent models; [1993, c. 683, Pt. A, §2 (NEW); 1993, c. 683, Pt. B, §5 (AFF).]
K. Steering mechanism; [1993, c. 683, Pt. A, §2 (NEW); 1993, c. 683, Pt. B,

§5 (AFF).]
L. Tires; [1993, c. 683, Pt. A, §2 (NEW); 1993, c. 683, Pt. B, §5(AFF).]
M. Windshield wipers; [1993, c. 683, Pt. A, §2 (NEW); 1993, c. 683, Pt. B, §5 (AFF).]
N. Catalytic converter on 1983 and subsequent models; and [1993, c. 683, Pt. A, §2 (NEW); 1993, c. 683, Pt. B, §5 (AFF).]
O. Filler neck restriction on 1983 and subsequent models. [1993, c. 683, Pt. A, §2 (NEW); 1993, c. 683, Pt. B, §5 (AFF).]
[1993, c. 683, Pt. A, §2 (NEW); 1993, c. 683, Pt. B, §5 (AFF) .]

2-A. **Enhanced inspection.** Beginning January 1, 1999, a motor vehicle that is required to be registered in Cumberland County and that is subject to inspection pursuant to subsection 1 must have an annual enhanced inspection. The following equipment is subject to inspection:
A. Equipment subject to inspection pursuant to subsection 2; [1997, c. 786, §1 (NEW).]
B. The fuel tank cap on 1974 and subsequent models of gasoline-powered vehicles; and [1997, c. 786, §1 (NEW).]
C. The on-board diagnostic system on 1996 and subsequent models. [1997, c. 786, §1 (NEW).]
A motor vehicle that is not required to be registered in Cumberland County may have an enhanced inspection under this subsection.
[1997, c. 786, §1 (NEW) .]

3. **Inspection fee.**
[2001, c. 234, §1 (RP) .]

3-A. **Inspection fees.** An inspection station may charge the following fees:
A. For inspections performed under subsection 2, the fee may not be more than $12.50; [2001, c. 234, §2 (NEW).]
B. For inspections of pre-1996 model vehicles performed under subsection 2-A, the fee may not be more than $15.50; and [2001, c. 234, §2 (NEW).]
C. For inspections of 1996 and subsequent model vehicles performed under subsection 2-A, the fee may not be more than $18.50. [2001, c. 234, §2 (NEW).]
The inspection fee is payable whether the vehicle passes inspection or not.
[2001, c. 234, §2 (NEW) .]

4. **Implementation.** The enhanced inspection required by subsection 2-A must be implemented as follows.
A. The fuel tank cap is subject to inspection beginning January 1, 1999. [1997, c. 786, §3 (NEW).]
B. The on-board diagnostic system is subject to inspection beginning January 1, 2000. A motor vehicle may not fail inspection for failure to meet the inspection standard for the on-board diagnostic system until January 1, 2001. [1997, c. 786, §3 (NEW).]
[1997, c. 786, §3 (NEW) .]
SECTION HISTORY
1993, c. 683, §A2 (NEW). 1993, c. 683, §B5 (AFF). 1997, c. 786, §§1-3 (AMD). 2001, c. 234, §§1,2 (AMD).

29-A §1752. MOTOR VEHICLES EXEMPT FROM INSPECTION

The following are exempt from inspection: [1993, c. 683, Pt. A, §2 (NEW); 1993, c. 683, Pt. B, §5 (AFF).]

1. **Registered in another state.** A motor vehicle owned and registered in another state and displaying a valid certificate of inspection from another state or a federally approved commercial vehicle inspection program;
[1993, c. 683, Pt. A, §2 (NEW); 1993, c. 683, Pt. B, §5 (AFF) .]

2. **Farm tractors.** A farm tractor;
[1993, c. 683, Pt. A, §2 (NEW); 1993, c. 683, Pt. B, §5 (AFF) .]

3. **Antique autos.** An antique auto registered under section 457;
[1993, c. 683, Pt. A, §2 (NEW); 1993, c. 683, Pt. B, §5 (AFF) .]

4. **Farm truck.** A farm truck that:
A. Is operated within a 20-mile radius from the main entrance of the farm where the vehicle is customarily kept; [1993, c. 683, Pt. A, §2 (NEW); 1993, c. 683, Pt. B, §5 (AFF).]
B. Has a partial annual inspection of the running gear, steering mechanism, brakes, exhaust system and lights; safety glass under section 1915; and tires under section 1917; and [2005, c. 314, §7 (AMD).]
C. Bears the name of the municipality in which the excise tax is paid in 4-inch letters on the left door of the cab; [1993, c. 683, Pt. A, §2 (NEW); 1993, c. 683, Pt. B, §5 (AFF).]
[2005, c. 314, §7 (AMD) .]

5. **Island vehicles.** A motor vehicle that is:
A. Used for the conveyance of passengers; [1993, c. 683, Pt. A, §2 (NEW); 1993, c. 683, Pt. B, §5 (AFF).]
B. Registered for a fee of $2 under section 501, subsection 2-A; and [2001, c. 471, Pt. A, §30 (AMD).]
C. Operated exclusively on an island having no roads maintained or supported by the State; [1993, c. 683, Pt. A, §2 (NEW); 1993, c. 683, Pt. B, §5 (AFF).]
[2001, c. 471, Pt. A, §30 (AMD) .]

6. **Moped or motorized bicycle or tricycle.** A moped or a motorized bicycle or tricycle;
[2007, c. 348, §1 (AMD) .]

7. **Fish truck.** A fish truck that:
A. Is operated within a 20-mile radius of the municipality where excise tax on the truck is paid; [1993, c. 683, Pt. A, §2 (NEW); 1993, c. 683, Pt. B, §5 (AFF).]
B. Has a partial annual inspection consisting of the running gear, steering mechanism, brakes, exhaust system and lights; safety glass under section 1915; and tires under section 1917, subsection 3; and [2005, c. 314, §8 (AMD).]
C. Bears the name of the municipality in which the excise tax is paid in 4-inch letters on the left door of the cab; [1993, c. 683, Pt. A, §2 (NEW); 1993, c. 683, Pt. B, §5 (AFF).]
[2005, c. 314, §8 (AMD) .]

8. **Woods tractor.** A converted motor vehicle used as a tractor solely for logging purposes that:
A. Is registered as a tractor pursuant to section 509 or exempt from registration pursuant to section 510; [1997, c. 437, §42 (RPR).]
B. Is operated only during daylight hours, only within a 10-mile radius of the premises where the tractor is customarily kept and only between those premises and:
(1) A woodlot used for logging purposes by the owner; and
(2) A filling station or garage for fuel or repairs; and [1997, c. 437, §42 (RPR).]
C. Has a partial annual inspection of running gear, steering mechanism, brakes and exhaust system and tires under section 1917, subsection 3; [2003, c. 125, §2 (AMD); 2003, c. 397, §5 (AMD).]
[2003, c. 125, §2 (AMD); 2003, c. 397, §5 (AMD) .]

9. **Registered in this State.** A motor vehicle registered in this State displaying a valid certificate of inspection from another state or a federally approved commercial vehicle inspection program for one year after the date of inspection;
[2005, c. 314, §9 (AMD) .]

10. **Experimental motor vehicle.** A vehicle registered as an experimental motor vehicle pursuant to section 470. An experimental motor vehicle must meet minimum equipment standards pursuant to section

470, subsection 2; and
[2003, c. 397, §7 (AMD) .]

11. **Low-speed vehicle.** A low-speed vehicle registered pursuant to section 501, subsection 11. A lowspeed vehicle must be equipped in accordance with section 1925.
[2003, c. 397, §8 (NEW) .]
SECTION HISTORY
1993, c. 683, §A2 (NEW). 1993, c. 683, §B5 (AFF). 1997, c. 437, §42 (AMD). 2001, c. 471, §A30 (AMD). 2003, c. 125, §§2-4 (AMD). 2003, c. 397, §§5-7 (AMD). 2003, c. 397, §8 (AMD). 2003, c. 688, §A34 (AMD). 2005, c. 314, §§7-9 (AMD). 2007, c. 348, §1 (AMD).

29-A §1753. INSPECTION OF COMMERCIAL VEHICLES, TRAILERS AND SEMITRAILERS

1. **Inspection required.** Except as provided in subsection 4, a commercial motor vehicle that is required to be registered in this State, is used in intrastate or interstate commerce and has a gross vehicle weight or gross vehicle weight rating greater than 10,000 pounds, including the gross vehicle weight rating or gross weight of any trailer or semitrailer, must be inspected annually pursuant to this chapter. Except as provided in subsection 4, a trailer or semitrailer that has a gross vehicle weight or gross vehicle weight rating greater than 7,000 pounds, independent of the towing vehicle, must be inspected annually. A trailer or semitrailer must also be inspected annually when:
A. Engaged in interstate commerce and used with a motor vehicle that has a gross vehicle weight or gross vehicle weight rating greater than 10,000 pounds, including the gross vehicle weight or gross vehicle weight rating of a trailer or semitrailer and load; or [2007, c. 348, §2 (NEW).]
B. Except as provided in subsection 4, engaged in intrastate commerce and used with a motor vehicle that has a gross vehicle weight or gross vehicle weight rating greater than 10,000 pounds, including the gross vehicle weight or gross vehicle weight rating of a trailer or semitrailer and load. [2007, c. 348, §2 (NEW).]
[2007, c. 348, §2 (AMD) .]

2. **Scope of inspection.** The Chief of the State Police shall adopt rules for the inspection required by subsection 1 that meet the requirements of 49 Code of Federal Regulations, Section 396.17.
[1993, c. 683, Pt. A, §2 (NEW); 1993, c. 683, Pt. B, §5 (AFF) .]

3. **Fee.** Except as provided in this subsection, the fee for an inspection under this section is based on the inspector's normal hourly labor charge and is due whether or not the vehicle passes inspection. A licensed inspection station shall post the hourly labor charge in a conspicuous place.
The fee for an inspection under this section of a farm truck registered under section 505 is $45. The inspection fee is payable whether the vehicle passes inspection or not.
[2007, c. 190, §1 (AMD) .]

4. **Vehicles exempt from annual inspection.** The following vehicles are exempt from the requirements of this section:
A. When used exclusively in intrastate commerce, a trailer or semitrailer with a gross vehicle weight, including any load, that does not exceed 3,000 pounds; [1993, c. 683, Pt. A, §2 (NEW); 1993, c. 683, Pt. B, §5 (AFF).]
B. When used exclusively in intrastate commerce, a semitrailer designed and used exclusively for dispensing cable from reels attached to the semitrailer, commonly called a reel trailer, and any semitrailer designed and used exclusively to support the ends of poles being transported, commonly called a pole dolly, when the gross weight of the semitrailer and load does not exceed 12,000 pounds; [1993, c. 683, Pt. A, §2 (NEW); 1993, c. 683, Pt. B, §5 (AFF).]
C. Any mobile home, empty storage trailer or empty storage semitrailer displaying a trailer transit plate in accordance with section 954, subsections 4 and 5; [1993, c. 683, Pt. A, §2 (NEW); 1993, c. 683, Pt. B, §5 (AFF).]
D. A farm truck or a fish truck exempted under section 1752; [2007, c. 348, §3 (AMD).]
E. A trailer or semitrailer displaying a valid certificate of inspection from another state or a federally approved commercial vehicle inspection program until the normal expiration of its certificate of

inspection; and [2007, c. 348, §4 (AMD).]
F. A camp trailer. [2007, c. 348, §5 (NEW).]
[2007, c. 348, §§3-5 (AMD) .]

5. **Proof of inspection.** Proof of inspection must be shown either by a report that certifies that the inspection satisfies the requirements of this section or by an inspection sticker placed on the vehicle. If proof is shown by a report, the report must be produced on the demand of a law enforcement officer.
[1993, c. 683, Pt. A, §2 (NEW); 1993, c. 683, Pt. B, §5 (AFF) .]
SECTION HISTORY
1993, c. 683, §A2 (NEW). 1993, c. 683, §B5 (AFF). 2007, c. 190, §1 (AMD). 2007, c. 348, §§2-5 (AMD).

29-A §1754. INSPECTION BY DEALERS AND TRANSPORTERS

1. **Inspection standards.** A holder of a dealer license or a transporter registration certificate may permit a vehicle to be operated on a public way only if the vehicle:
A. Meets inspection standards; [1993, c. 683, Pt. A, §2 (NEW); 1993, c. 683, Pt. B, §5 (AFF).]
B. Is owned by the dealer or holder of the transporter registration certificate and is operated by the owner or the owner's employee for the sole purpose of travelling to a body repair establishment and is mechanically safe but requires body repairs; [1993, c. 683, Pt. A, §2 (NEW); 1993, c. 683, Pt. B, §5 (AFF).]
C. Is sold or transferred to another person, meets inspection standards and displays a valid certificate of inspection issued within 60 days of the sale or transfer; [2001, c. 180, §1 (AMD).]
D. If operated by a dealer or holder of a transporter registration certificate, is operated only from a point of purchase to the licensee's place of business. For the purposes of this paragraph, "point of purchase" includes, but is not limited to, an auto auction, distribution center or another licensed vehicle dealer; or [2001, c. 180, §1 (AMD).]
E. Is owned by the dealer or holder of the transporter registration certificate and is operated by the owner or the owner's employee for the sole purpose of traveling to an inspection facility. [2001, c. 180, §2 (NEW).]
This subsection does not allow the operation of an unsafe motor vehicle on a public way.
[2001, c. 180, §§1, 2 (AMD) .]

2. **Remove prior certificate.** If the vehicle bears a prior inspection certificate, that certificate must be removed.
[1993, c. 683, Pt. A, §2 (NEW); 1993, c. 683, Pt. B, §5 (AFF) .]

3. **Violations.** The provisions of this subsection apply to violations of this section.
A. A violation of this section is a traffic infraction for which a penalty of not more than $1,000 for each violation may be assessed. [1993, c. 683, Pt. A, §2 (NEW); 1993, c. 683, Pt. B, §5 (AFF).]
B. A violation of this section is also a violation of the provisions governing unfair trade practice under Title 5, chapter 10. [1993, c. 683, Pt. A, §2 (NEW); 1993, c. 683, Pt. B, §5 (AFF).]
C. It is not a defense to this section that the dealer or holder did not know that the vehicle did not meet inspection standards or required a certificate. [1993, c. 683, Pt. A, §2 (NEW); 1993, c. 683, Pt. B, §5 (AFF).]
[1993, c. 683, Pt. A, §2 (NEW); 1993, c. 683, Pt. B, §5 (AFF) .]
SECTION HISTORY
1993, c. 683, §A2 (NEW). 1993, c. 683, §B5 (AFF). 2001, c. 180, §§1,2 (AMD).

29-A §1755. INSPECTION OF FIRE TRUCKS

A fire chief, or a municipal official of a municipality without a fire chief, may contract with a licensed inspection station for a licensed inspection mechanic to perform an inspection at the location where fire trucks are customarily kept. [1993, c. 683, Pt. A, §2 (NEW); 1993, c. 683, Pt. B, §5

(AFF).]
SECTION HISTORY
1993, c. 683, §A2 (NEW). 1993, c. 683, §B5 (AFF).

29-A §1756. INSPECTION STANDARDS

1. **Inspection standards.** Equipment subject to inspection must:
A. Be in good working order; [1993, c. 683, Pt. A, §2 (NEW); 1993, c. 683, Pt. B, §5 (AFF).]
B. Be safely attached or secured to the chassis or body of the vehicle; [1993, c. 683, Pt. A, §2 (NEW); 1993, c. 683, Pt. B, §5 (AFF).]
C. Be mechanically safe; [1993, c. 683, Pt. A, §2 (NEW); 1993, c. 683, Pt. B, §5 (AFF).]
D. Not pose a hazard to the occupant of the vehicle or to the general public; and [1993, c. 683, Pt. A, §2 (NEW); 1993, c. 683, Pt. B, §5 (AFF).]
E. Meet the standards set forth in rules adopted by the Chief of the State Police. [1993, c. 683, Pt. A, §2 (NEW); 1993, c. 683, Pt. B, §5 (AFF).]
[1993, c. 683, Pt. A, §2 (NEW); 1993, c. 683, Pt. B, §5 (AFF) .]

2. **Inspection standard for catalytic converter.** Notwithstanding the inspection standards of subsection 1, a catalytic converter subject to the inspection required by section 1751, subsection 2, paragraph N must meet the rules promulgated by the Chief of the State Police and must be safely attached or secured to the chassis or body of the vehicle.
[1993, c. 683, Pt. A, §2 (NEW); 1993, c. 683, Pt. B, §5 (AFF) .]

3. **Windows.** In addition to the standards set forth in subsection 1, windows must meet the standards of sections 1915 and 1916.
[1993, c. 683, Pt. A, §2 (NEW); 1993, c. 683, Pt. B, §5 (AFF) .]

4. **Fenders.** Except as provided by section 1953, subsection 2, paragraph E, a motor vehicle other than a street rod must be equipped with fenders or fenders and extensions. When a wheel and tire are installed that permit the tire tread to extend beyond the natural fender configuration, the fenders must be modified or extended to cover the exposed tire tread.
[1993, c. 683, Pt. A, §2 (NEW); 1993, c. 683, Pt. B, §5 (AFF) .]

5. **Safety seat belts.**
[2007, c. 348, §6 (RP) .]

6. **Inspection standard for fuel tank cap.** Notwithstanding the inspection standards of subsection 1, a fuel tank cap subject to the inspection required by section 1751, subsection 2-A, paragraph B must meet the standards in rules adopted by the Chief of the State Police. The Chief of the State Police shall adopt rules to establish procedures and standards for a fuel tank cap pressure test.
[1997, c. 786, §4 (NEW) .]

7. **Inspection standard for on-board diagnostic system.** Notwithstanding the inspection standards of subsection 1, an on-board diagnostic system subject to the inspection required by section 1751, subsection 2-A, paragraph C must meet the standards in rules adopted by the Chief of the State Police. The Chief of the State Police shall adopt rules that meet the requirements of 40 Code of Federal Regulations, Part 85 for onboard diagnostic test procedures, standards and equipment.
[1997, c. 786, §4 (NEW) .]
SECTION HISTORY
1993, c. 683, §A2 (NEW). 1993, c. 683, §B5 (AFF). 1997, c. 786, §4 (AMD). 2007, c. 348, §6 (AMD).

29-A §1757. STANDARD FOR REJECTION FOR NONFUNCTIONING EQUIPMENT
A motor vehicle must be rejected for violation of the inspection standard for equipment if any equipment described in section 1751, subsection 2 does not function sufficiently for the safety of the general public or is

loose and not securely attached to the vehicle. [1993, c. 683, Pt. A, §2 (NEW); 1993, c. 683, Pt. B, §5 (AFF).]
SECTION HISTORY
1993, c. 683, §A2 (NEW). 1993, c. 683, §B5 (AFF).

29-A §1758. ISSUANCE OF STICKER; PLACEMENT ON VEHICLE

1. **Windshield placement.** If a motor vehicle meets the inspection standard, an official inspection sticker must be placed in the lower left-hand corner of the windshield or in the center of the windshield in back of the rearview mirror.
[1993, c. 683, Pt. A, §2 (NEW); 1993, c. 683, Pt. B, §5 (AFF) .]

2. **Without windshield.** If the vehicle is not normally equipped with a windshield, the certificate of inspection must be kept with the registration certificate of the vehicle.
[1993, c. 683, Pt. A, §2 (NEW); 1993, c. 683, Pt. B, §5 (AFF) .]
SECTION HISTORY
1993, c. 683, §A2 (NEW). 1993, c. 683, §B5 (AFF).

29-A §1759. TEMPORARY PERMITS AND WARNINGS

1. **Issuance.** A law enforcement officer, an employee of a municipal police department designated by the chief, an employee of a sheriff's department designated by the sheriff, an employee of the Department of Public Safety designated by the Chief of the State Police or an employee of the Bureau of Motor Vehicles designated by the Secretary of State may issue a permit allowing operation of an uninspected vehicle to an inspection station for inspection.
[2007, c. 348, §7 (AMD) .]

2. **Reconstructable vehicle.** This section does not apply to reconstructable motor vehicles as defined in Title 10, section 1471.
[1993, c. 683, Pt. A, §2 (NEW); 1993, c. 683, Pt. B, §5 (AFF) .]

3. **Warning.** The owner or operator of a vehicle operated with an expired inspection sticker during the first month immediately after expiration may not be issued a summons to court but may only be issued a warning. This warning must state that the vehicle must be inspected within 2 business days. Failure to comply with a warning is a violation punishable in accordance with section 1768.
[1993, c. 2, §23 (COR) .]
SECTION HISTORY
1993, c. 683, §A2 (NEW). 1993, c. 683, §B5 (AFF). RR 1993, c. 2, §23 (COR). 1999, c. 41, §2 (AMD). 2007, c. 348, §7 (AMD).

29-A §1760. EXAMINATION AND IMPOUNDMENT OF VEHICLES

1. **Examination for compliance.** A law enforcement officer in uniform may stop and examine a motor vehicle to determine whether the vehicle's equipment complies with the requirements of section 1756.
[1993, c. 683, Pt. A, §2 (NEW); 1993, c. 683, Pt. B, §5 (AFF) .]
2. **Scope of inspection.** The officer may demand and inspect the driver's license, the certificate of registration, permits and the identification numbers of the motor vehicle.
[1993, c. 683, Pt. A, §2 (NEW); 1993, c. 683, Pt. B, §5 (AFF) .]

3. **Probable cause for inspection.** A law enforcement officer may require the operator to proceed to an official inspection station and submit the vehicle to an inspection and tests as may be appropriate on reasonable grounds to believe that:
A. A vehicle is unsafe or not equipped as required by law; or [1993, c. 683, Pt. A, §2 (NEW); 1993, c. 683, Pt. B, §5 (AFF).]
B. The vehicle's equipment does not conform to the inspection standard. [1993, c. 683, Pt. A, §2 (NEW); 1993, c. 683, Pt. B, §5 (AFF).]
[1993, c. 683, Pt. A, §2 (NEW); 1993, c. 683, Pt. B, §5 (AFF) .]
SECTION HISTORY

1993, c. 683, §A2 (NEW). 1993, c. 683, §B5 (AFF).

29-A §1761. CERTIFIED INSPECTION MECHANICS

1. **Performance of inspection.** No person other than a holder of an inspection mechanic certificate may perform an inspection or issue or sign a certificate of inspection.
[1993, c. 683, Pt. A, §2 (NEW); 1993, c. 683, Pt. B, §5 (AFF) .]

1-A. **Application and examination.** A person may submit an application with the required fee under subsection 3 for an inspection mechanic certificate to the Department of Public Safety, Bureau of State Police and complete the examination up to 6 months prior to the person's 18th birthday. The Bureau of State Police may process the application and test the applicant up to 6 months prior to the applicant's 18th birthday but may not issue the certificate until the applicant is 18 years of age.
[2003, c. 222, §1 (NEW) .]

2. **Requirements for inspection mechanic certification.** To receive an inspection mechanic certificate, an applicant must:
A. Pass a written or oral examination that is designed to test knowledge of motor vehicle inspection and the method of inspecting and testing motor vehicle equipment; and [1993, c. 683, Pt. A, §2 (NEW); 1993, c. 683, Pt. B, §5 (AFF).]
B. Be a person of honesty, integrity and reliability. [1993, c. 683, Pt. A, §2 (NEW); 1993, c. 683, Pt. B, §5 (AFF).]
[1993, c. 683, Pt. A, §2 (NEW); 1993, c. 683, Pt. B, §5 (AFF) .]

3. **Examination fee.** Applicants for inspection mechanic certification must pay to the Chief of the State Police a fee of $1 for an application for examination or for renewal of a certificate.
[1993, c. 683, Pt. A, §2 (NEW); 1993, c. 683, Pt. B, §5 (AFF) .]

4. **Term of certification.** An inspection mechanic certificate is valid for a period of 5 years from the date of issue.
[1993, c. 683, Pt. A, §2 (NEW); 1993, c. 683, Pt. B, §5 (AFF) .]

5. **Renewal.** An examination is not required if application for a renewal is made within one year of expiration.
[1993, c. 683, Pt. A, §2 (NEW); 1993, c. 683, Pt. B, §5 (AFF) .]

6. **Remission of certificate.**
[2009, c. 251, §5 (RP) .]

7. **Notification of change in place of employment.** Prior to inspecting vehicles for a new employer, the holder of an inspection mechanic certificate shall notify the Chief of the State Police of a change of place of employment.
[1993, c. 683, Pt. A, §2 (NEW); 1993, c. 683, Pt. B, §5 (AFF) .]

8. **Testing in parking area.** Notwithstanding sections 1251, 1252 and 1253, a certified inspection mechanic who has a valid operator's license of any class may operate a motor vehicle in a parking area adjacent to an official inspection station for the purpose of testing equipment as required by the rules adopted pursuant to this chapter.
[1993, c. 683, Pt. A, §2 (NEW); 1993, c. 683, Pt. B, §5 (AFF) .]
SECTION HISTORY
1993, c. 683, §A2 (NEW). 1993, c. 683, §B5 (AFF). 2003, c. 222, §1 (AMD). 2009, c. 251, §5 (AMD).

29-A §1762. OFFICIAL INSPECTION STATIONS

1. **Licensing of official inspection stations.** The Chief of the State Police may license garages as official inspection stations.
[2007, c. 348, §8 (AMD) .]

2. **Requirements.**
[2007, c. 348, §9 (RP) .]

2-A. **Requirements.** To qualify as an official inspection station, a garage must comply with rules adopted by the Chief of the State Police.
[2007, c. 348, §10 (NEW) .]

3. **Examination of premises and operator of garage.** Before a license is granted, the premises must be examined and the operator of the garage investigated as to reliability and fitness.
[1993, c. 683, Pt. A, §2 (NEW); 1993, c. 683, Pt. B, §5 (AFF) .]

4. **Term of license.** The license is valid for 2 years from the date of final license approval.
[2007, c. 348, §11 (AMD) .]

5. **Licenses not transferable.** A license may not be assigned or transferred or used at other than a designated location.
[1993, c. 683, Pt. A, §2 (NEW); 1993, c. 683, Pt. B, §5 (AFF) .]

6. **Posting of license on premises.** A license must be posted in a conspicuous place at the designated location.
[1993, c. 683, Pt. A, §2 (NEW); 1993, c. 683, Pt. B, §5 (AFF) .]

7. **Hearing; appeals.** If a person is aggrieved by the decision of the Chief of the State Police in refusing approval, that person may, within 30 days of notification of refusal to license, request a hearing before the Chief of the State Police or the chief's designee. After the hearing, if an applicant is aggrieved by the final action of the chief, the applicant may appeal the decision in accordance with Title 5, Part 18.
[2007, c. 348, §12 (AMD) .]

8. **Enhanced inspection stations.** Beginning January 1, 1999, official inspection stations located in Cumberland County shall offer enhanced inspections pursuant to section 1751, subsection 2-A and may not offer inspections pursuant to section 1751, subsection 2. Official inspection stations located outside of Cumberland County may offer inspections under section 1751, subsections 2 and 2-A. An inspection station that offers enhanced inspections shall employ an inspection mechanic certified to perform enhanced inspections.
[1997, c. 786, §5 (NEW) .]
SECTION HISTORY
1993, c. 683, §A2 (NEW). 1993, c. 683, §B5 (AFF). 1995, c. 65, §A101 (AMD). 1995, c. 65, §§A153,C15 (AFF). 1997, c. 786, §5 (AMD). 2007, c. 348, §§8-12 (AMD).

29-A §1763. SUSPENSION OR REVOCATION OF LICENSE OR INSPECTION MECHANIC CERTIFICATE

Notwithstanding Title 5, section 10003, a State Police officer or employee of the State Police designated as a motor vehicle inspector may immediately suspend or revoke the license issued to any official inspection station or the inspection mechanic certificate issued to any inspecting mechanic for a violation of this chapter or the rules adopted pursuant to section 1769. The penalty for a first offense is a license suspension for a period of up to 6 months. The penalty for a 2nd or subsequent offense is a license suspension for a period of up to one year or license revocation. [2007, c. 348, §13 (AMD).]
Pursuant to Title 5, chapter 375, the Chief of the State Police or the chief's designee shall schedule a hearing, if requested by the owner of an official inspection station, an employee of that station or the inspection mechanic, to review the suspension or revocation. The suspension or revocation remains in effect pending the final agency decision and during any appeal of that decision. [1993, c. 683, Pt. A, §2 (NEW); 1993, c. 683, Pt. B, §5 (AFF).]
As a prerequisite to reinstatement following a license suspension or revocation, the Chief of the State Police may require an inspection mechanic to satisfactorily complete the inspection mechanic examination provided for in section 1761, subsection 2. [1993, c. 683, Pt. A, §2 (NEW); 1993, c.

683, Pt. B, §5 (AFF).]
SECTION HISTORY
1993, c. 683, §A2 (NEW). 1993, c. 683, §B5 (AFF). 2003, c. 633, §3 (AMD). 2007, c. 348, §13 (AMD).

29-A §1764. FLEET INSPECTION STATIONS

1. **License by Chief of the State Police.** The Chief of the State Police may license fleet inspection stations to inspect 10 or more vehicles registered in the name of a single owner.
[1993, c. 683, Pt. A, §2 (NEW); 1993, c. 683, Pt. B, §5 (AFF) .]

2. **Requirements.** To qualify as a fleet inspection station, a station must:
A. [2007, c. 348, §14 (RP).]
B. Have at least 10 vehicles registered in the name of the fleet inspection station owner or be under contract to the owner of the fleet of vehicles for exclusive maintenance. [1993, c. 683, Pt. A, §2 (NEW); 1993, c. 683, Pt. B, §5 (AFF).]
[2007, c. 348, §14 (AMD) .]

3. **Limit to fleet vehicles.** Fleet station inspections are limited exclusively to fleet vehicles.
[1993, c. 683, Pt. A, §2 (NEW); 1993, c. 683, Pt. B, §5 (AFF) .]

4. **Employment of certified inspection mechanics.** A fleet inspection station must employ a sufficient number of certified inspection mechanics to inspect every vehicle in the fleet annually.
A certified inspection mechanic may inspect fleets of vehicles at the fleet station, if proper inspection equipment is available.
Fleet vehicles must be inspected by a certified inspection mechanic who may issue and sign inspection certificates.
Fleet vehicle inspectors are subject to the same provisions as certified inspection mechanics.
[1993, c. 683, Pt. A, §2 (NEW); 1993, c. 683, Pt. B, §5 (AFF) .]
SECTION HISTORY
1993, c. 683, §A2 (NEW). 1993, c. 683, §B5 (AFF). 2007, c. 348, §14 (AMD).

29-A §1765. OUT-OF-DOORS INSPECTIONS

A certified inspection mechanic may inspect a vehicle out-of-doors if: [1993, c. 683, Pt. A, §2 (NEW); 1993, c. 683, Pt. B, §5 (AFF).]

1. **Class of vehicles.** The vehicle conforms to the class of vehicle that the inspection station license authorizes for inspection; and
[1993, c. 683, Pt. A, §2 (NEW); 1993, c. 683, Pt. B, §5 (AFF) .]

2. **Altered vehicles.** Alterations or additions to the basic design or structure of the vehicle not produced by the original manufacturer prevent the vehicle from entering inside the inspection station.
[1993, c. 683, Pt. A, §2 (NEW); 1993, c. 683, Pt. B, §5 (AFF) .]
SECTION HISTORY
1993, c. 683, §A2 (NEW). 1993, c. 683, §B5 (AFF).

29-A §1766. INSPECTION STICKERS

1. **Stickers remain property of State.** Inspection stickers and materials issued to inspection stations by the Chief of the State Police remain the property of the State.
[1993, c. 683, Pt. A, §2 (NEW); 1993, c. 683, Pt. B, §5 (AFF) .]

2. **Stock of stickers.** An inspection station must stock a sufficient number of stickers to meet all demands. The stickers must be made of a material and quality of adhesive prescribed by the Chief of the State Police.
[1993, c. 683, Pt. A, §2 (NEW); 1993, c. 683, Pt. B, §5 (AFF) .]

3. **Fee.** Stickers are furnished by the Chief of the State Police at $2.50 each.
[2001, c. 234, §3 (AMD) .]

4. **Statement of intent to hire a certified mechanic.** If a station is disqualified by the loss of a certified mechanic, the owner shall, within 5 working days, return all stickers to the Chief of the State Police.
The owner may file a statement of intent to hire a certified inspection mechanic within 14 working days, in which case the Chief of the State Police shall hold the returned stickers for the licensee.
If a statement of intent is not filed, returned stickers may be reissued.
[1993, c. 683, Pt. A, §2 (NEW); 1993, c. 683, Pt. B, §5 (AFF) .]

5. **Return or refund of unused stickers.** Within 20 working days of the calendar year or the suspension, revocation or termination of an inspection license, unused or expired stickers must be returned to the Chief of the State Police and the purchase price refunded or exchanged for current year stickers. Refunds or exchanges may only be made for full sheets of unused stickers.
[1993, c. 683, Pt. A, §2 (NEW); 1993, c. 683, Pt. B, §5 (AFF) .]

6. **Return of inspection materials.** Upon suspension, revocation or termination of an inspection license, the station owner or manager shall return all inspection materials to the Chief of the State Police, who shall issue a receipt for the returned materials.
[1993, c. 683, Pt. A, §2 (NEW); 1993, c. 683, Pt. B, §5 (AFF) .]
SECTION HISTORY
1993, c. 683, §A2 (NEW). 1993, c. 683, §B5 (AFF). 1997, c. 786, §6 (AMD). 1997, c. 786, §14 (AFF). 2001, c. 234, §3 (AMD).

29-A §1767. DISPOSITION OF FEES

The revenues generated by this chapter must be credited to the General Highway Fund. [1993, c. 683, Pt. A, §2 (NEW); 1993, c. 683, Pt. B, §5 (AFF).]
SECTION HISTORY
1993, c. 683, §A2 (NEW). 1993, c. 683, §B5 (AFF).

29-A §1768. UNLAWFUL ACTS

1. **Display of fictitious certificate.** A person commits a Class E crime if that person displays or permits to be displayed on a vehicle a certificate of inspection knowing the certificate to be fictitious or issued to another vehicle or issued without an inspection having been made.
[1993, c. 683, Pt. A, §2 (NEW); 1993, c. 683, Pt. B, §5 (AFF) .]

2. **Use of counterfeit certificate of inspection.** A person commits a Class E crime if the person makes, possesses, issues or knowingly uses an imitation or counterfeit of an official certificate of inspection or a certificate of inspection that was not issued by an official inspection station in accordance with law.
[1993, c. 683, Pt. A, §2 (NEW); 1993, c. 683, Pt. B, §5 (AFF) .]

3. **Misrepresentation of vehicle inspection station.** A person commits a Class E crime if that person represents a place as an official inspection station and the station is not operating under a valid license.
[1993, c. 683, Pt. A, §2 (NEW); 1993, c. 683, Pt. B, §5 (AFF) .]

4. **Issuance of certificate for substandard vehicle.** A person commits a Class E crime if that person knowingly causes an official inspection sticker to be attached to a vehicle that does not conform to the inspection standard.
[1993, c. 683, Pt. A, §2 (NEW); 1993, c. 683, Pt. B, §5 (AFF) .]

5. **Operation of defective vehicle.** A person may not operate a vehicle on a public way with equipment on the vehicle that does not conform to the standards set forth in rules adopted by the Chief of the State Police pursuant to section 1769.
A. Except as provided in paragraphs B and C, a person who violates this subsection commits a traffic infraction. [2003, c. 688, Pt. C, §13 (NEW).]

B. A person who violates this subsection commits a Class E crime if the vehicle is unsafe for operation because it poses an immediate hazard to an occupant of the vehicle or the general public. [2003, c. 688, Pt. C, §13 (NEW).]
C. A person who violates this subsection and is involved in a motor vehicle accident caused by nonconformance with the rules adopted by the Chief of the State Police pursuant to section 1769 commits a Class E crime. [2003, c. 688, Pt. C, §13 (NEW).]
[2003, c. 688, Pt. C, §13 (RPR) .]

6. **Alteration after inspection.** A person commits a Class E crime if that person alters equipment after inspection so that the equipment does not conform to the standards of this subchapter.
[1993, c. 683, Pt. A, §2 (NEW); 1993, c. 683, Pt. B, §5 (AFF) .]

7. **Operation of vehicle without certificate of inspection.** An owner or operator of a vehicle required to be inspected commits a traffic infraction if that person operates that vehicle or permits that vehicle to be operated without displaying a current and valid certificate of inspection or producing the certificate on demand of a police officer.
[1993, c. 683, Pt. A, §2 (NEW); 1993, c. 683, Pt. B, §5 (AFF) .]
SECTION HISTORY
1993, c. 683, §A2 (NEW). 1993, c. 683, §B5 (AFF). 2003, c. 688, §C13 (AMD).

29-A §1769. RULES

1. **Scope.** The Chief of the State Police may adopt rules:
A. For the administration and enforcement of this chapter; [1993, c. 683, Pt. A, §2 (NEW); 1993, c. 683, Pt. B, §5 (AFF).]
B. To designate periods of time during which owners of vehicles must display or produce a certificate of inspection; and [1993, c. 683, Pt. A, §2 (NEW); 1993, c. 683, Pt. B, §5 (AFF).]
C. Concerning the inspection of registered special mobile equipment not ordinarily operated over the highway. [1993, c. 683, Pt. A, §2 (NEW); 1993, c. 683, Pt. B, §5 (AFF).]
[1993, c. 683, Pt. A, §2 (NEW); 1993, c. 683, Pt. B, §5 (AFF) .]

1-A. **Delay in effective date.** Except for emergency rules adopted under Title 5, section 8054, rules adopted under this section take effect 30 days after filing with the Secretary of State under Title 5, section 8056, subsection 1, paragraph B.
[2007, c. 135, §1 (NEW); 2007, c. 135, §2 (AFF) .]

2. **Review of rules by Legislature.** Rules adopted under this section are routine technical rules pursuant to Title 5, chapter 375, subchapter 2-A.
[2003, c. 340, §2 (AMD) .]
SECTION HISTORY
1993, c. 683, §A2 (NEW). 1993, c. 683, §B5 (AFF). 1999, c. 183, §4 (AMD). 2003, c. 340, §2 (AMD). 2007, c. 135, §1 (AMD). 2007, c. 135, §2 (AFF).

29-A §1770. PENALTIES

1. **General penalty.** Notwithstanding Title 17-A, and unless otherwise specified, a violation of this chapter is a Class E crime, punishable by a fine of not less than $25 nor more than $500 or by imprisonment for not more than 30 days, or by both.
[1993, c. 683, Pt. A, §2 (NEW); 1993, c. 683, Pt. B, §5 (AFF) .]

2. **Traffic infraction.** A violation of the rules adopted by the Chief of the State Police pertaining to this subchapter is a traffic infraction subject to a forfeiture of not less than $25 nor more than $250.
[1993, c. 683, Pt. A, §2 (NEW); 1993, c. 683, Pt. B, §5 (AFF) .]
SECTION HISTORY

1993, c. 683, §2 (NEW).

Subchapter 2: REPAIR HEADING: PL 1993, C. 683, PT. A, §2 (NEW); PT. B, §5 (AFF)

29-A §1801. DEFINITIONS

As used in this subchapter, unless the context otherwise indicates, the following terms have the following meanings. [1993, c. 683, Pt. A, §2 (NEW); 1993, c. 683, Pt. B, §5 (AFF).]

1. **Customer.** "Customer" means a person, including, but not limited to, an agent, who contracts with a repair facility for repair of a motor vehicle.
[1993, c. 683, Pt. A, §2 (NEW); 1993, c. 683, Pt. B, §5 (AFF) .]

2. **Flat rate.** "Flat rate" means a method of calculating charges for labor that is based on the specific repair done and not on the amount of time actually spent on that repair.
[1993, c. 683, Pt. A, §2 (NEW); 1993, c. 683, Pt. B, §5 (AFF) .]

3. **Repair.** "Repair" means the examination, maintenance, servicing, adjustment, improvement, replacement, removal or installation of a part of a motor vehicle, including, but not limited to, body work, painting and incidental services such as storage and towing, and excluding the sale of motor fuel.
[1993, c. 683, Pt. A, §2 (NEW); 1993, c. 683, Pt. B, §5 (AFF) .]

4. **Repair facility.** "Repair facility" means a motor vehicle repair facility offering services to the general public for compensation.
[1993, c. 683, Pt. A, §2 (NEW); 1993, c. 683, Pt. B, §5 (AFF) .]

5. **Shop supplies.** "Shop supplies" means small parts and materials used or consumed in the process of repair, including, but not limited to, nuts and bolts, electrical wire, rags, tape, brake cleaners and other items maintained as inventory.
[2005, c. 189, §1 (NEW) .]
SECTION HISTORY
1993, c. 683, §A2 (NEW). 1993, c. 683, §B5 (AFF). 2005, c. 189, §1 (AMD).

29-A §1802. MAXIMUM CHARGE FOR REPAIR

1. **Written designation by customer.** Before a repair facility begins repairing a customer's motor vehicle, the customer may designate in writing a specific amount of charges for repair in excess of which the customer does not agree to be liable without further specific agreement, either oral or written.
[1993, c. 683, Pt. A, §2 (NEW); 1993, c. 683, Pt. B, §5 (AFF) .]

2. **No liability without agreement.** A customer is not liable for a charge in excess of the specific amount designated in accordance with subsection 1 without further specific oral or written agreement. A repair facility shall charge a customer by using the same labor rate per hour and shop supplies calculation as is used in any estimate the repair facility provides.
[2005, c. 189, §2 (AMD) .]

3. **Shop supplies.** A repair facility may bill for shop supplies calculated as a percentage of labor or by other calculation, if disclosed to the customer, as a single line item.
[2005, c. 189, §3 (NEW) .]
SECTION HISTORY
1993, c. 683, §A2 (NEW). 1993, c. 683, §B5 (AFF). 2005, c. 189, §§2,3 (AMD).

29-A §1803. INSPECTION OF PARTS

Before demanding payment of any charge, a repair facility must allow a customer to inspect replaced

parts and must return replaced parts to the customer on request unless the facility is required to return the parts to the manufacturer or distributor under a bona fide warranty or exchange arrangement. [1993, c. 683, Pt. A, §2 (NEW); 1993, c. 683, Pt. B, §5 (AFF).]
SECTION HISTORY
1993, c. 683, §A2 (NEW). 1993, c. 683, §B5 (AFF).

29-A §1804. USED PARTS

Unless the customer specifically agrees before installation of the part, a repair facility may not install a used, reconditioned or rebuilt part. [1993, c. 683, Pt. A, §2 (NEW); 1993, c. 683, Pt. B, §5 (AFF).]
SECTION HISTORY
1993, c. 683, §A2 (NEW). 1993, c. 683, §B5 (AFF).

29-A §1805. NOTICES

1. **Form of notice.** A repair facility must post the following notice in a place where it is reasonably likely to be seen by customers. The notice must be completed with information on charges and printed so that it is conspicuous and can be read by the average person.
The following form must be used:
"NOTICE TO OUR CUSTOMERS
REQUIRED UNDER STATE LAW
Before we begin making repairs, you have a right to put in writing the total amount you agree to pay for repairs. You will not have to pay anything over that amount unless you agree to it when we contact you later.
Before you pay your bill, you have a right to inspect any replaced parts. You have a right to take with you any replaced parts, unless we are required to return the parts to our distributor or manufacturer.
We can not install any used or rebuilt parts unless you specifically agree in advance.
You can not be charged any fee for exercising these rights.
WE CHARGE $ PER HOUR FOR LABOR.
(We round off the time to the nearest .)"
[1993, c. 683, Pt. A, §2 (NEW); 1993, c. 683, Pt. B, §5 (AFF) .]

2. **Flat rate.** The notice must also contain the following if it applies:
"We also charge a flat rate for some repairs. Our service manager will explain what a flat rate is and show you how much it may cost you. A flat-rate charge may not match the time actually spent repairing your vehicle. PLEASE ASK US WHETHER WE WILL CHARGE YOU BY THE HOUR OR BY A FLAT RATE. We use the same labor rate method in any estimate we provide and any bill you receive."
[2005, c. 189, §4 (AMD) .]

3. **Availability of guide.**
[2005, c. 189, §5 (RP) .]

4. **Shop supplies.** If the repair facility charges a separate line item for shop supplies, the notice must also contain the following:
"WE CHARGE ..... FOR SHOP SUPPLIES. Our service manager will explain shop supplies and how much they may cost you."
[2005, c. 189, §6 (NEW) .]
SECTION HISTORY
1993, c. 683, §A2 (NEW). 1993, c. 683, §B5 (AFF). 1997, c. 221, §1 (AMD). 2005, c. 189, §§4-6 (AMD).

29-A §1806. FEE PROHIBITED

A repair facility may not, directly or indirectly, charge a fee for performing an obligation or for exercising a right under this subchapter. [1993, c. 683, Pt. A, §2 (NEW); 1993, c.

683, Pt. B, §5 (AFF).]
SECTION HISTORY
1993, c. 683, §A2 (NEW). 1993, c. 683, §B5 (AFF).

29-A §1807. UNFAIR TRADE PRACTICE

A repair facility's failure to comply with this subchapter constitutes an unfair trade practice under Title 5, chapter 10. [1993, c. 683, Pt. A, §2 (NEW); 1993, c. 683, Pt. B, §5 (AFF).]
SECTION HISTORY
1993, c. 683, §A2 (NEW). 1993, c. 683, §B5 (AFF).

29-A §1808. WAIVER PROHIBITED

The duties imposed by and rights created under this subchapter may not be waived or otherwise modified. Any waiver or modification is contrary to public policy and is void and unenforceable. [1993, c. 683, Pt. A, §2 (NEW); 1993, c. 683, Pt. B, §5 (AFF).]
SECTION HISTORY
1993, c. 683, §A2 (NEW). 1993, c. 683, §B5 (AFF).

29-A §1809. SAVINGS CLAUSE

This subchapter is in addition to and does not limit or replace other rights or procedures provided by statute or common law. [1993, c. 683, Pt. A, §2 (NEW); 1993, c. 683, Pt. B, §5 (AFF).]
SECTION HISTORY
1993, c. 683, §A2 (NEW). 1993, c. 683, §B5 (AFF).

Subchapter 3: ABANDONED VEHICLES HEADING:
PL 1993, C. 683, PT. A, §2 (NEW); PT. B, §5 (AFF)

29-A §1851. APPLICATION

This subchapter applies to a vehicle that is: [1993, c. 683, Pt. A, §2 (NEW); 1993, c. 683, Pt. B, §5 (AFF).]

1. **Towed at request of owner or driver.** Towed at the request of the owner or driver;
[1993, c. 683, Pt. A, §2 (NEW); 1993, c. 683, Pt. B, §5 (AFF) .]
29-A §1852. Abandonment defined | 273

2. **Towed because illegally parked or left standing or at officer's discretion.** Towed pursuant to section 2068 or 2069 or at the direction of a law enforcement officer;
[2007, c. 150, §1 (AMD) .]

3. **Towed because left without permission.** Towed after being left on property without permission;
[1993, c. 683, Pt. A, §2 (NEW); 1993, c. 683, Pt. B, §5 (AFF) .]

4. **Left without permission.** Left on property without the permission of the property owner or person in charge of the property or premises where the vehicle is located;
[1993, c. 683, Pt. A, §2 (NEW); 1993, c. 683, Pt. B, §5 (AFF) .]

5. **Left after repair completed.** Left at a place of business after being repaired pursuant to a written work order signed by the person requesting the repair work; or
[1993, c. 683, Pt. A, §2 (NEW); 1993, c. 683, Pt. B, §5 (AFF) .]

6. **Left on residential property.** Left on an individual's residential property for more than 6 months.
[1993, c. 683, Pt. A, §2 (NEW); 1993, c. 683, Pt. B, §5 (AFF) .]
A vehicle towed for snow removal purposes is exempt from the provisions of this subchapter for 48 hours immediately following completion of the tow. [1993, c. 683, Pt. A, §2 (NEW);

1993, c. 683, Pt. B, §5 (AFF).]
A vehicle abandoned on an island without road access to the mainland is subject to the provisions of section 1860. [1995, c. 65, Pt. A, §102 (NEW); 1995, c. 65, Pt. A, §153 (AFF).]
SECTION HISTORY
1993, c. 683, §A2 (NEW). 1993, c. 683, §B5 (AFF). 1995, c. 65, §A102 (AMD). 1995, c. 65, §§A153,C15 (AFF). 2007, c. 150, §1 (AMD).

29-A §1852. ABANDONMENT DEFINED

For the purposes of this subchapter, a vehicle is considered "abandoned" if the owner or lienholder does not retrieve it and pay all reasonable charges for towing, storing and authorized repair of the vehicle within 7 days after the notices to the owner and lienholder are sent by the Secretary of State or 7 days after the advertisement is published as required in section 1854, subsection 4. There is a rebuttable presumption that the last owner of record of a motor vehicle found abandoned as shown in the files of the office of the Secretary of State is the owner of the motor vehicle at the time it was abandoned and the person who abandoned it. [2007, c. 150, §2 (AMD).]
SECTION HISTORY
1993, c. 683, §A2 (NEW). 1993, c. 683, §B5 (AFF). 1999, c. 137, §1 (AMD). 2007, c. 150, §2 (AMD).

29-A §1853. LETTER OF OWNERSHIP OR CERTIFICATE OF TITLE

If a person abandons a vehicle as described in section 1851, the owner of the premises or property where the vehicle is located may obtain a letter of ownership or a certificate of title by complying with this subchapter. [1993, c. 683, Pt. A, §2 (NEW); 1993, c. 683, Pt. B, §5 (AFF).]
1993, c. 683, §A2 (NEW). 1993, c. 683, §B5 (AFF).

29-A §1854. NOTIFICATION OF VEHICLE OWNER

1. **Notification in writing**. The owner of the premises where an abandoned vehicle is located or the owner's agent shall notify the Secretary of State that the owner or the owner's agent is in possession of an abandoned vehicle. The notification must be in writing and on a form provided by the Secretary of State.

2. **Contents of notification.** This notification must include the vehicle's make, model, year, body type, vehicle identification number and any registration and plates on the vehicle. This notification also must include the date the vehicle came into possession of the owner, the owner's agent or person in charge of the premises where the vehicle is located, under what circumstances the vehicle came into that person's possession and whether the vehicle is salvage.
[2007, c. 150, §4 (AMD) .]

3. **Response.** On receipt of the notification, the Secretary of State shall inform the vehicle owner and lienholder, if any, by regular mail that the vehicle is being claimed under the abandoned vehicle law. The notice to the vehicle owner and lienholder, if any, must identify the vehicle by the year, make, model and vehicle identification number, give the name and address of the party claiming ownership, state the charges against the vehicle that the owner and lienholder, if any, must pay to retrieve the vehicle, and the date that the title or letter of ownership will pass to the new owner. If the party is claiming ownership of the vehicle pursuant to section 603, subsection 6, the notice must inform the vehicle owner and lienholder that the owner must pay to the Secretary of State the fee required in section 603 to transfer the title. A copy of this letter must be provided to the person claiming ownership.
[2009, c. 435, §21 (AMD) .]

4. **Publication.** If the Secretary of State finds no record of the vehicle, the owner of the premises where the vehicle is located shall publish a notice once in a newspaper of general circulation in the county where the premises is located. That notice must clearly:
A. Describe the vehicle by the year, make, model and vehicle identification number; [1999, c. 137, §1 (AMD).]
B. State that if the owner of the vehicle or lienholder has not properly retrieved it and paid all reasonable

charges for its towing, storage and repair within 7 days from the publication, ownership of the vehicle passes to the owner of the premises where the vehicle is located; and [2007, c. 150, §5 (AMD).]
C. State how the owner of the premises may be contacted. [1993, c. 683, Pt. A, §2 (NEW); 1993, c. 683, Pt. B, §5 (AFF).]
[2007, c. 150, §5 (AMD) .]

1. **Notification in writing.** The owner of the premises where an abandoned vehicle is located or the owner's agent shall notify the Secretary of State that the owner or the owner's agent is in possession of an abandoned vehicle. The notification must be in writing and on a form provided by the Secretary of State.
[2007, c. 150, §3 (AMD) .]
SECTION HISTORY
1993, c. 683, §A2 (NEW). 1993, c. 683, §B5 (AFF). 1999, c. 137, §1 (AMD). 2001, c. 563, §3 (AMD). 2007, c. 150, §§3-5 (AMD). 2009, c. 435, §21 (AMD).

29-A §1855. OWNER OR LIENHOLDER KNOWN
(REPEALED)
SECTION HISTORY
1993, c. 683, §A2 (NEW). 1993, c. 683, §B5 (AFF). 1999, c. 137, §2 (RP).

29-A §1856. CHANGE OF OWNERSHIP

1. **Evidence of compliance.** A person who has complied with section 1854, subsection 4 shall present evidence of compliance to the Secretary of State immediately after the 7-day notice period. The Secretary of State may not issue a letter of ownership or certificate of title until at least 21 days after the date on which the person who has possession of and control over the vehicle notified the Secretary of State by complying with section 1854, subsections 1 and 2.
[2007, c. 150, §6 (AMD) .]

2. **Issuance of certificate; letter of ownership.** The Secretary of State, upon being satisfied that notice has been made to all parties with an interest in the vehicle, may issue certificates of title or letters of ownership as follows.
A. For a vehicle not required to be titled, on presentation of sufficient evidence and payment of a $5 fee, the Secretary of State may issue a letter of ownership to the owner of the premises on which the vehicle is located. [1993, c. 683, Pt. A, §2 (NEW); 1993, c. 683, Pt. B, §5 (AFF).]
B. For vehicles subject to chapter 7, on presentation of sufficient evidence and application for certificate of title in accordance with section 654 and payment of a fee set forth in section 603, the Secretary of State may issue a certificate of title to the owner of the premises on which the vehicle is located. [1993, c. 683, Pt. A, §2 (NEW); 1993, c. 683, Pt. B, §5 (AFF).]
[1999, c. 137, §3 (AMD) .]
If the owner or lienholder of the vehicle retrieves it and pays the towing, storage and repair charges before the Secretary of State issues a letter of ownership or certificate of title, the person holding the vehicle must immediately release it to the person paying the charges and must immediately notify the Secretary of State of the release. [1993, c. 683, Pt. A, §2 (NEW); 1993, c. 683, Pt. B, §5 (AFF).]
A person who refuses to release a vehicle when reasonable charges are paid or does not notify the Secretary of State that the vehicle is no longer in the person's possession commits a Class E crime. [1999, c. 137, §3 (NEW).]
SECTION HISTORY
1993, c. 683, §A2 (NEW). 1993, c. 683, §B5 (AFF). 1999, c. 137, §3 (AMD). 2007, c. 150, §6 (AMD).

29-A §1857. LIMITS

If the notification to the Secretary of State required by section 1854 is made more than 7 days after

receipt of a vehicle described in section 1851, the person holding the vehicle may not collect more than 7 days of storage fees. Daily storage charges must be reasonable and total storage charges may not exceed $900 for a 30-day period. [2007, c. 150, §7 (AMD).]
SECTION HISTORY
1993, c. 683, §A2 (NEW). 1993, c. 683, §B5 (AFF). 1999, c. 137, §3 (AMD). 2007, c. 150, §7 (AMD).

29-A §1858. ABANDONMENT OF VEHICLE ON PUBLIC WAY

Abandonment of a vehicle on a public way is a traffic infraction for which a fine of not less than $250 must be assessed. A person who is found to have abandoned a vehicle under this section is responsible for any towing or other charges that are directly related to the abandonment of the vehicle. [2007, c. 150, §8 (AMD).]
SECTION HISTORY
1993, c. 683, §A2 (NEW). 1993, c. 683, §B5 (AFF). 1995, c. 65, §A103 (AMD). 1995, c. 65, §§A153,C15 (AFF). 2007, c. 150, §8 (AMD).

29-A §1859. REMOVAL OF VEHICLE

Removal of a vehicle described in section 1851 or of any part or accessory from the vehicle without the written consent of the person in charge or the owner of the premises or property where the vehicle is located is a Class E crime. This section applies to all persons, including the owner of the vehicle. [1995, c. 65, Pt. A, §104 (AMD); 1995, c. 65, Pt. A, §153 (AFF); 1995, c. 65, Pt. C, §15 (AFF).]
SECTION HISTORY
1993, c. 683, §A2 (NEW). 1993, c. 683, §B5 (AFF). 1995, c. 65, §A104 (AMD). 1995, c. 65, §§A153,C15 (AFF).

29-A §1860. ABANDONMENT ON AN ISLAND

A person may not abandon a motor vehicle on any property on an island without consent of the owner of the property. The State, municipality or other political subdivision having jurisdiction over the island may order the owner of a vehicle illegally abandoned on an island to remove it at the vehicle owner's expense. If the owner of the vehicle refuses to remove the motor vehicle, or if the owner is unknown, the State or political subdivision may cause the vehicle to be removed from the island and may require reimbursement from the owner for the removal and the administrative and legal costs. Neither the State nor any political subdivision of the State is liable for any damage to the motor vehicle that may be caused by the removal. Failure to remove an illegally abandoned vehicle on an island within 30 days after written warning, or within 30 days of iceout if ice prevents the island from being reasonably accessible, is a Class E crime. [1995, c. 65, Pt. A, §105 (NEW); 1995, c. 65, Pt. A, §153 (AFF); 1995, c. 65, Pt. C, §15 (AFF).]
SECTION HISTORY
1995, c. 65, §A105 (NEW). 1995, c. 65, §§A153,C15 (AFF).

29-A §1861. HOLDING VEHICLE AND ITS ACCESSORIES

A person holding or storing an abandoned vehicle, holding or storing a vehicle towed at the request of the vehicle's operator, owner or owner's agent or holding or storing a vehicle stored at the request of a law enforcement officer may hold the vehicle and all its accessories, contents and equipment, not including the personal effects of the registered owner, until reasonable towing and storage charges of the person holding or storing the vehicle are paid. [2007, c. 150, §9 (NEW).]
For purposes of this section, "personal effects" includes medications, medical equipment, clothing, mail, child safety seats and similar items. Except for child safety seats, items attached to the vehicle and business equipment, machinery and tools are not considered personal effects. [2007, c. 150, §9 (NEW).]
SECTION HISTORY
2007, c. 150, §9 (NEW).

Re-printed portion of MRSA Title 29-A of relevance to Motor Vehicle Inspections

The State of Maine claims a copyright in its codified statutes. If you intend to republish this material, we require that you include the following disclaimer in your publication:

All copyrights and other rights to statutory text are reserved by the State of Maine. The text included in this publication reflects changes made through the First Special Session of the 124th Legislature, and is current through December 31, 2009, but is subject to change without notice. It is a version that has not been officially certified by the Secretary of State. Refer to the Maine Revised Statutes Annotated and supplements for certified text.

The Office of the Revisor of Statutes also requests that you send us one copy of any statutory publication you may produce. Our goal is not to restrict publishing activity, but to keep track of who is publishing what, to identify any needless duplication and to preserve the State's copyright rights.

PLEASE NOTE: The Revisor's Office cannot perform research for
or provide legal advice or interpretation of Maine law to the public. If you need legal assistance, please contact a qualified attorney.

Chapter 17: EQUIPMENT
Subchapter 1: GENERAL PROVISIONS HEADING:
PL 1993, C. 683, PT. A, §2 (NEW); PT. B, §5 (AFF)

29-A §1901. GENERAL RESTRICTION

A person may not use a vehicle on a public way or sell or equip a vehicle for use on a public way with aftermarket equipment contrary to this Title or contrary to the rules of the Chief of the State Police. [2007, c. 121, §1 (AMD).]
SECTION HISTORY
1993, c. 683, §A2 (NEW). 1993, c. 683, §B5 (AFF). 2007, c. 121, §1 (AMD).

29-A §1902. BRAKES

1. **General rule.** A motor vehicle must have adequate brakes in good working order that are sufficient to control the vehicle.
[1993, c. 683, Pt. A, §2 (NEW); 1993, c. 683, Pt. B, §5 (AFF) .]

2. **Specific standards.** Brakes must be adjusted so as to stop:
A. A 2-wheel brake vehicle, within a distance of 45 feet, from a speed of 20 miles per hour; [1993, c. 683, Pt. A, §2 (NEW); 1993, c. 683, Pt. B, §5 (AFF).]
B. A 4-wheel brake vehicle, within 30 feet, from a speed of 20 miles per hour; or [1993, c. 683, Pt. A, §2 (NEW); 1993, c. 683, Pt. B, §5 (AFF).]
C. A motorcycle, within 30 feet, from a speed of 20 miles per hour. [2005, c. 577, §22 (AMD).]
[2005, c. 577, §22 (AMD) .]

3. **Parking brakes.** A vehicle, except a 2-wheel motorcycle, must be equipped with parking brakes adequate to hold the vehicle on any grade on which it is operated, under all conditions of loading, on a surface free from snow, ice or loose material. Parking brakes:
A. Must be capable of being applied by the driver's muscular effort, spring action or equivalent means; [1993, c. 683, Pt. A, §2 (NEW); 1993, c. 683, Pt. B, §5 (AFF).]
B. May be operated with assistance of the service brakes or other source of power, provided that failure of the service brake actuation system or other power assisting mechanism does not prevent the parking brakes from being applied; [1993, c. 683, Pt. A, §2 (NEW); 1993, c. 683, Pt. B, §5 (AFF).]
C. Must be designed so that, once applied, they remain applied with the required effectiveness despite leakage or exhaustion of any source of energy; [1993, c. 683, Pt. A, §2 (NEW); 1993,

c. 683, Pt. B, §5 (AFF).]
D. May share the same brake drums, brake shoes and lining assemblies, brake shoe anchors and mechanical brake shoe actuation mechanisms associated with the wheel brake assemblies used for service brakes; and [1993, c. 683, Pt. A, §2 (NEW); 1993, c. 683, Pt. B, §5 (AFF).]
E. If the means of applying the parking and service brakes are connected, must be constructed so that failure of one part does not leave the vehicle without operative brakes. [1993, c. 683, Pt. A, §2 (NEW); 1993, c. 683, Pt. B, §5 (AFF).]
[2005, c. 577, §23 (AMD) .]

4. **Trucks; specific requirements.** Special mobile equipment or a truck, truck tractor, trailer or semitrailer must be equipped with adequate brakes acting on all wheels of all axles, except that the following need not meet this requirement:
A. A trailer or semitrailer not exceeding a gross weight of 3,000 pounds; [1993, c. 683, Pt. A, §2 (NEW); 1993, c. 683, Pt. B, §5 (AFF).]
B. A vehicle towed by use of a wrecker; [1993, c. 683, Pt. A, §2 (NEW); 1993, c. 683, Pt. B, §5 (AFF).]
C. A vehicle meeting braking requirements of the motor carrier safety regulations of the United States Department of Transportation; [1993, c. 683, Pt. A, §2 (NEW); 1993, c. 683, Pt. B, §5 (AFF).]
D. A semitrailer with a gross weight of semitrailer and load not to exceed 12,000 pounds, designed and used exclusively:
(1) For the dispensing of cable from attached reels, commonly called a reel trailer; or
(2) To support the end of poles while being transported, commonly called a pole dolly; and
[1999, c. 183, §5 (AMD).]
F. A dolly axle, so-called, on a farm truck transporting agricultural products and supplies.
A dolly axle may not be considered in determining the gross weight or axle limits permitted on the vehicle.
A 2-axle or 3-axle farm truck equipped with a dolly axle is considered a 2-axle or 3-axle vehicle.
[1993, c. 683, Pt. A, §2 (NEW); 1993, c. 683, Pt. B, §5 (AFF).]
[1999, c. 183, §5 (AMD) .]

5. **Multiple axles.** If equipped with 3 or more axles, a truck, tractor or truck tractor manufactured prior to August 1, 1980 need not have brakes on the front wheels; if the vehicle is equipped with 2 or more steerable axles, the wheels of one such axle need not have brakes.
[1993, c. 683, Pt. A, §2 (NEW); 1993, c. 683, Pt. B, §5 (AFF) .]

6. **Rules.** The Chief of the State Police may adopt rules governing the sufficiency and adjustment of brakes.
[1993, c. 683, Pt. A, §2 (NEW); 1993, c. 683, Pt. B, §5 (AFF) .]
SECTION HISTORY
1993, c. 683, §A2 (NEW). 1993, c. 683, §B5 (AFF). 1999, c. 183, §5 (AMD). 2005, c. 577, §§22,23 (AMD).

29-A §1903. ADEQUATE SIGNALING DEVICE; USE

1. **Signaling device required.** A person may not operate a motor vehicle without a suitable and adequate horn or other device for signaling.
[2003, c. 452, Pt. Q, §19 (NEW); 2003, c. 452, Pt. X, §2 (AFF) .]
2. **Unnecessarily sounded.** A person may not unnecessarily sound a signaling device or horn.
[2003, c. 452, Pt. Q, §19 (NEW); 2003, c. 452, Pt. X, §2 (AFF) .]
SECTION HISTORY
1993, c. 683, §A2 (NEW). 1993, c. 683, §B5 (AFF). 2003, c. 452, §X2 (AFF). 2003, c. 452, §Q19 (RPR).

29-A §1904. HEADLIGHTS

1. **General rules; headlights.** A person may not operate a motor vehicle that does not meet the following requirements concerning headlights.
A. A motor vehicle must be equipped with headlights. [2003, c. 452, Pt. Q, §20 (NEW); 2003, c. 452, Pt. X, §2 (AFF).]
B. Headlights must be of sufficient power and so adjusted and operated as to enable the operator to proceed with safety under all ordinary conditions of highway and weather. [2003, c. 452, Pt. Q, §20 (NEW); 2003, c. 452, Pt. X, §2 (AFF).]
[2003, c. 452, Pt. X, §2 (AFF); 2003, c. 452, Pt. Q, §20 (RPR) .]

2. **Location of headlights.** On a motor vehicle, a headlight must be located at a height, measured from the center of the headlight, of not more than 54 inches nor less than 22 inches above the level surface on which the vehicle stands. Headlights on snow plows may be at a height greater than 54 inches.
[1993, c. 683, Pt. A, §2 (NEW); 1993, c. 683, Pt. B, §5 (AFF) .]

3. **White light.** Headlights must be equipped with lenses or reflectors that emit only white light.
[1993, c. 683, Pt. A, §2 (NEW); 1993, c. 683, Pt. B, §5 (AFF) .]

4. **Number of headlights.** The following rules apply regarding the mounting of headlights.
A. A motor vehicle must have mounted on the front at least 2 headlights, one on each side. [2003, c. 452, Pt. Q, §21 (NEW); 2003, c. 452, Pt. X, §2 (AFF).]
B. A motorcycle must have one mounted headlight. [2005, c. 577, §24 (AMD).]
[2005, c. 577, §24 (AMD) .]

5. **Requirements.** The following requirements apply to a headlight.
A. If the vehicle is mechanically constructed so that it is limited to less than 15 miles per hour, it must have headlights capable of furnishing sufficient candlepower to render any substantial object clearly discernible on a level way at least 50 feet directly ahead and at the same time at least 7 feet to the right of the axis of the vehicle for a distance of at least 25 feet. [1993, c. 683, Pt. A, §2 (NEW); 1993, c. 683, Pt. B, §5 (AFF).]
B. If the vehicle is mechanically constructed so that it can exceed 15 miles per hour, it must have headlights capable of furnishing sufficient candlepower to render any substantial object clearly discernible on a level way at least 200 feet directly ahead and at the same time at least 7 feet to the right of the axis of the vehicle for a distance of at least 100 feet. [1993, c. 683, Pt. A, §2 (NEW); 1993, c. 683, Pt. B, §5 (AFF).]
C. A headlight capable of furnishing more than 4 candlepower, if equipped with a reflector, may not be used unless the headlight is designed, equipped or mounted so that no portion of the beam of light, when projected 75 feet or more ahead, rises above a plane of 42 inches higher than and parallel with the level surface on which the vehicle stands. [1993, c. 683, Pt. A, §2 (NEW); 1993, c. 683, Pt. B, §5 (AFF).]
D. The top of a main beam of light may not be higher than the headlight center. [1993, c. 683, Pt. A, §2 (NEW); 1993, c. 683, Pt. B, §5 (AFF).]
E. An electric bulb or other lighting device of a greater capacity than 32 candlepower may not be used, except for the standard equipment sealed beam unit. [1993, c. 683, Pt. A, §2 (NEW); 1993, c. 683, Pt. B, §5 (AFF).]
F. A headlight may not project the top of a main beam, at a distance of 25 feet ahead of the vehicle, on an approximately level stretch of highway, onto the body of a person or an object, at a height greater than that of the center of the front light from the highway. [1993, c. 683, Pt. A, §2 (NEW); 1993, c. 683, Pt. B, §5 (AFF).]
[1993, c. 683, Pt. A, §2 (NEW); 1993, c. 683, Pt. B, §5 (AFF) .]

6. **Motorcycle.** A motorcycle that does not have an adequate beam for headlights is restricted to daytime operation.
[2005, c. 577, §25 (AMD) .]

7. **Exception for farm tractors.** This section does not apply to unregistered farm tractors.
[1993, c. 683, Pt. A, §2 (NEW); 1993, c. 683, Pt. B, §5 (AFF) .]

SECTION HISTORY
1993, c. 683, §A2 (NEW). 1993, c. 683, §B5 (AFF). 2003, c. 452, §§Q20,21 (AMD). 2003, c. 452, §X2 (AFF). 2005, c. 577, §§24,25 (AMD).

29-A §1905. REAR LIGHTS

1. **Requirement.** Except as provided in subsection 3, a motor vehicle with 3 or more wheels or a trailer or semitrailer must have on the rear 2 lights, one on each side of the axis, each capable of displaying a red light visible for a distance of at least 100 feet behind the vehicle.
[2005, c. 314, §10 (AMD) .]

2. **Vehicles used in conjunction.** When a vehicle is used in conjunction with another vehicle, only the last must carry the lights.
[1993, c. 683, Pt. A, §2 (NEW); 1993, c. 683, Pt. B, §5 (AFF) .]

3. **Vehicles manufactured with one rear light.** If a vehicle was manufactured with only a single rear light, that light is sufficient if the light complies with the visibility requirement and is in the center or to the left of the vehicle's axis.
[1993, c. 683, Pt. A, §2 (NEW); 1993, c. 683, Pt. B, §5 (AFF) .]
MRS Title 29-A: MOTOR VEHICLES HEADING: PL 1993, c. 683, Pt. A, §2 (new); Pt. B, §5 (aff)
Chapter 17: EQUIPMENT
29-A §1905-A. Turn signal | 281

4. **Exception for farm tractors.** This section does not apply to unregistered farm tractors.
[1993, c. 683, Pt. A, §2 (NEW); 1993, c. 683, Pt. B, §5 (AFF) .]
SECTION HISTORY
1993, c. 683, §A2 (NEW). 1993, c. 683, §B5 (AFF). 2005, c. 314, §10 (AMD).

29-A §1905-A. TURN SIGNAL

1. **Requirement.** Except as provided in subsection 3, a motor vehicle, trailer or semitrailer must be equipped with electric flashing turn signal lamps. A motor vehicle must emit white or amber light from the turn signals to the front of the vehicle and a motor vehicle, trailer or semitrailer must emit amber or red light from the turn signals to the rear of the vehicle.
[1995, c. 584, Pt. A, §2 (NEW) .]

2. **Vehicles physically connected.** When a vehicle that is being operated is physically connected to another vehicle, only the last vehicle must carry turn signals to the rear.
[1995, c. 584, Pt. A, §2 (NEW) .]

3. **Vehicles manufactured without turn signal.** Automobiles and trucks less than 80 inches in width, manufactured or assembled prior to January 1, 1953 need not be equipped with electric turn signal lamps.
[1995, c. 584, Pt. A, §2 (NEW) .]

4. **Exception for farm tractors.** This section does not apply to unregistered farm tractors.
[1995, c. 584, Pt. A, §2 (NEW) .]
SECTION HISTORY
1995, c. 584, §A2 (NEW).

29-A §1906. CLEARANCE LIGHTS

1. **Requirements for vehicle 7 feet or more in width.** A vehicle 7 feet or more in width must have a green or amber light attached to the extreme left of the front, adjusted to indicate the extreme left lateral extension of the vehicle or load and at least one red light on the extreme left lateral extension of the vehicle or load on the rear.
[2003, c. 452, Pt. Q, §22 (NEW); 2003, c. 452, Pt. X, §2 (AFF) .]

2. **Requirements for closed body vehicle 8 feet or more in height.** A vehicle with a closed body 8 feet or more in height must display 2 green or amber lights attached to the extreme left of the front of its body, one at the top and the other at the bottom. The vehicle must also display at least one red light on the extreme upper left lateral extension of its body.
[2003, c. 452, Pt. Q, §22 (NEW); 2003, c. 452, Pt. X, §2 (AFF) .]

3. **Visibility.** Body width lights and height lights must be visible not less than 200 feet in the direction towards which the vehicle is proceeding or facing.
[2003, c. 452, Pt. Q, §22 (NEW); 2003, c. 452, Pt. X, §2 (AFF) .]

4. **Reflector alternative.** In place of body width lights and height lights, a vehicle may be equipped with an adequate reflector conforming as to color and location to the requirements for the light.
[2003, c. 452, Pt. Q, §22 (NEW); 2003, c. 452, Pt. X, §2 (AFF) .]

5. **Application.** This section does not apply to unregistered farm tractors.
[2003, c. 452, Pt. Q, §22 (NEW); 2003, c. 452, Pt. X, §2 (AFF) .]
SECTION HISTORY
1993, c. 683, §A2 (NEW). 1993, c. 683, §B5 (AFF). 2003, c. 452, §X2 (AFF). 2003, c. 452, §Q22 (RPR).

29-A §1907. REAR REFLECTORS

A vehicle must be equipped with at least one adequate reflector securely attached to the rear. The reflector: [1993, c. 683, Pt. A, §2 (NEW); 1993, c. 683, Pt. B, §5 (AFF).]
1. **Part of rear light.** May be a part of the rear light;
[1993, c. 683, Pt. A, §2 (NEW); 1993, c. 683, Pt. B, §5 (AFF) .]

2. **Color.** Must be red; and
[1993, c. 683, Pt. A, §2 (NEW); 1993, c. 683, Pt. B, §5 (AFF) .]

3. **Reflection.** Must be designed, located and maintained to reflect at night on an unlighted highway, from at least 200 feet, the lawful undimmed headlights of a vehicle approaching from the rear.
[1993, c. 683, Pt. A, §2 (NEW); 1993, c. 683, Pt. B, §5 (AFF) .]

4. **Exception for unregistered farm tractors.** This section does not apply to unregistered farm tractors.
[1993, c. 683, Pt. A, §2 (NEW); 1993, c. 683, Pt. B, §5 (AFF) .]
SECTION HISTORY
1993, c. 683, §A2 (NEW). 1993, c. 683, §B5 (AFF).

29-A §1908. LOCATION OF REAR LIGHTS, REFLECTORS AND SIGNAL LAMPS
On a vehicle 7 feet wide or wider, all rear lights, reflectors and signal lights must be within 12 inches of the extreme extension of the vehicle. On flat-body dump trucks, rear lights and signal lamps may be mounted on the rear of the frame. This section does not apply to unregistered farm tractors or to trailers with rear lights, reflectors and signal lights installed by the commercial manufacturer. [1993, c. 683, Pt. A, §2 (NEW); 1993, c. 683, Pt. B, §5 (AFF).]
SECTION HISTORY
1993, c. 683, §A2 (NEW). 1993, c. 683, §B5 (AFF).

29-A §1909. REGISTRATION LAMP

A vehicle must have a white light capable of illuminating the rear registration plate so that the characters on the plate are visible for a distance of at least 50 feet. This section does not apply to unregistered farm tractors. [1993, c. 683, Pt. A, §2 (NEW); 1993, c. 683, Pt. B, §5 (AFF).]
SECTION HISTORY
1993, c. 683, §A2 (NEW). 1993, c. 683, §B5 (AFF).

29-A §1909-A. FOG LIGHTS

1. **Fog lights.** A motor vehicle may be equipped with 2 fog lights upon the front of the motor vehicle that emit amber or white light as long as the rays from the lights do not shine more than 2 feet above the road at a distance of 30 feet. A fog light mounted higher than the center of the main headlights may not be illuminated while a motor vehicle is being operated on a public way.
[2003, c. 340, §3 (NEW) .]
SECTION HISTORY
2003, c. 340, §3 (NEW).

29-A §1909-B. OPTIONAL AUXILIARY LIGHTING

1. **General restrictions.** Except as otherwise provided by section 2054 and any other law or rule, a vehicle may be equipped with or display an auxiliary light, as defined by section 2054, subsection 1, paragraph C, only if it conforms to the requirements of this section.
[2005, c. 183, §1 (NEW) .]

2. **Color.** The color of an auxiliary light must be as follows:
A. White or amber if the light is on the front of the vehicle; [2005, c. 183, §1 (NEW).]
B. Amber if the light is on the side of the vehicle; or [2005, c. 183, §1 (NEW).]
C. Amber or red if the light is on the rear of the vehicle. [2005, c. 183, §1 (NEW).]
[2005, c. 183, §1 (NEW) .]

3. **Beam.** An auxiliary light must emit a steady beam of light and may not blink, oscillate, rotate or flash.
[2005, c. 183, §1 (NEW) .]

4. **Brightness.** An auxiliary light may not emit a beam that is brighter than, has a greater candlepower than or distracts from the visibility of standard lighting equipment required by this Title or by the inspection rules adopted by the Chief of the State Police pursuant to section 1769.
[2005, c. 183, §1 (NEW) .]

5. **Operator visibility.** An auxiliary light may not be installed in a manner or on the vehicle so that it distracts or impairs the vision of the operator.
[2005, c. 183, §1 (NEW) .]

6. **Under-vehicle lighting.** An auxiliary light is under-vehicle lighting if it is a lighting device or lamp, including, but not limited to, a neon or fluorescent tube, installed under the chassis and it is designed to illuminate and reflect from the surface beneath the vehicle. A vehicle may be equipped with under-vehicle lighting for the purpose of participating in shows, events or other exhibitions, but the lighting may not be used or the vehicle illuminated with under-vehicle lighting on a public way.
[2005, c. 183, §1 (NEW) .]

7. **Violation.** A person who operates a motor vehicle equipped with, illuminated by, displaying or using an auxiliary light in violation of this section commits a traffic infraction.
[2005, c. 183, §1 (NEW) .]
SECTION HISTORY
2005, c. 183, §1 (NEW).

29-A §1910. RULES GOVERNING LIGHTS ON VEHICLES

The Chief of the State Police may adopt rules governing the adjustment, use and operation of lights on vehicles. [1993, c. 683, Pt. A, §2 (NEW); 1993, c. 683, Pt. B, §5 (AFF).]
SECTION HISTORY
1993, c. 683, §A2 (NEW). 1993, c. 683, §B5 (AFF).

29-A §1911. HYDRAULIC BRAKE FLUID

1. **Definition.** "Hydraulic brake fluid" means the liquid medium through which force is transmitted to the brakes in the hydraulic brake system of a vehicle.
[1993, c. 683, Pt. A, §2 (NEW); 1993, c. 683, Pt. B, §5 (AFF) .]

2. **Requirement.** Hydraulic brake fluid must be distributed and serviced with due regard for the safety of the occupants of the vehicle and the public.
[1993, c. 683, Pt. A, §2 (NEW); 1993, c. 683, Pt. B, §5 (AFF) .]

3. **Rules.** The Commissioner of Public Safety may adopt rules establishing standards and specifications for hydraulic brake fluid that must correlate with and, so far as practicable, conform to current standards and specifications of the Society of Automotive Engineers applicable to the fluid.
[1993, c. 683, Pt. A, §2 (NEW); 1993, c. 683, Pt. B, §5 (AFF) .]

4. **Prohibition.** A person may not distribute, have for sale, offer for sale, sell or service a vehicle with hydraulic brake fluid unless that fluid complies with the requirements of this section.
[1993, c. 683, Pt. A, §2 (NEW); 1993, c. 683, Pt. B, §5 (AFF) .]
SECTION HISTORY
1993, c. 683, §A2 (NEW). 1993, c. 683, §B5 (AFF).

29-A §1912. MUFFLERS

1. **Muffler required.** A person may not operate a motor vehicle unless that vehicle is equipped with an adequate muffler properly maintained to prevent excessive or unusual noise. For purposes of this subsection, “excessive or unusual noise” includes motor noise emitted by a motor vehicle that is noticeably louder than similar vehicles in the environment.
[2009, c. 639, §1 (AMD) .]

2. **Cutouts prohibited.** Except as provided in subsection 5, a muffler or exhaust system may not be equipped with a cutout, bypass or similar device.
[1993, c. 683, Pt. A, §2 (NEW); 1993, c. 683, Pt. B, §5 (AFF) .]

3. **Amplification prohibited.** A person may not operate a motor vehicle with an exhaust system that has been modified when the result of that modification is the amplification or increase of noise emitted by the motor above that emitted by the muffler originally installed on the vehicle.
[2009, c. 639, §2 (AMD) .]

4. **Exhaust system fastened to engine.** The entire exhaust system must be complete, without leakage and securely fastened to the engine block and frame.
[1993, c. 683, Pt. A, §2 (NEW); 1993, c. 683, Pt. B, §5 (AFF) .]

5. **Exception; racing meets.** Notwithstanding subsection 2, an owner or operator of a motor vehicle used occasionally in racing meets may obtain a permit from the Secretary of State for installing a cutout, bypass or similar device on the exhaust system of that motor vehicle pursuant to this subsection.
A. The cutout, bypass or similar modification must be kept closed and inoperative while the vehicle is on a public way. [2003, c. 452, Pt. Q, §23 (NEW); 2003, c. 452, Pt. X, §2 (AFF).]
B. The permit must be in the vehicle at all times while on a public way. [2003, c. 452, Pt. Q, §23 (NEW); 2003, c. 452, Pt. X, §2 (AFF).]
C. The Secretary of State shall determine the eligibility of all applicants for a permit. [2003, c. 452, Pt. Q, §23 (NEW); 2003, c. 452, Pt. X, §2 (AFF).]
D. The permit fee is $1 for the registration year. [2003, c. 452, Pt. Q, §23 (NEW); 2003, c. 452, Pt. X, §2 (AFF).]
[2003, c. 452, Pt. Q, §23 (RPR); 2003, c. 452, Pt. X, §2 (AFF) .]

6. **Defense for noise violations by motor vehicles and motorcycles.** The following are defenses to a violation of subsection 1 or 3.
A. If a muffler or exhaust system of a motor vehicle as defined in section 101, subsection 42, not including a motorcycle, does not emit noise in excess of 95 decibels as measured in accordance with standards and specifications outlined in standard J-1169 adopted by the Society of Automotive Engineers in May 1998, subsections 1 and 3 do not apply. A person served with a Violation Summons and Complaint charging a violation of subsection 1 or 3 must provide satisfactory evidence that the muffler or exhaust system does not emit noise in excess of 95 decibels as measured in accordance with standards and specifications outlined in standard J-1169 adopted by the Society of Automotive Engineers in May 1998. Measurements must be made by a participating certified inspection station. [2011, c. 158, §1 (NEW).]
B. Subsections 1 and 3 do not apply to a muffler or exhaust system of a motorcycle that does not emit noise, as measured in accordance with standards and specifications outlined in standard J-2825 adopted by the Society of Automotive Engineers in May 2009, in excess of 92 decibels at an idle and emits noise that does not measure:
(1) More than 96 decibels using the set RPM test or swept RPM test for an engine configuration other than a 3-cylinder or 4-cylinder engine configuration; or
(2) More than 100 decibels using the set RPM test or swept RPM test for a 3-cylinder or 4-cylinder engine configuration.
A person served with a Violation Summons and Complaint charging a violation of subsection 1 or 3 must provide satisfactory evidence that the muffler or exhaust system does not exceed decibel levels as described in this paragraph. Measurements must be made by a participating certified inspection station.
[2011, c. 158, §1 (NEW).]
[2011, c. 158, §1 (RPR) .]
SECTION HISTORY
1993, c. 683, §A2 (NEW). 1993, c. 683, §B5 (AFF). 2003, c. 140, §1 (AMD). 2003, c. 452, §Q23 (AMD). 2003, c. 452, §X2 (AFF). 2005, c. 314, §11 (AMD). 2009, c. 639, §§1, 2 (AMD). 2011, c. 158, §1 (AMD).

29-A §1913. MIRRORS

1. **Mirrors required.** A person may not operate on a public way a vehicle so constructed, equipped, loaded or used that the operator is prevented from having a constantly free and unobstructed view of the way immediately to the rear, unless there is attached a mirror or reflector placed and adjusted to afford the operator a clear, reflected view of the highway to the rear of the vehicle for a distance of at least 200 feet.
[1993, c. 683, Pt. A, §2 (NEW); 1993, c. 683, Pt. B, §5 (AFF) .]

2. **Temporary mirrors.** When a vehicle is operated without a trailer or semitrailer, temporary outside rearview mirrors must be removed or otherwise adjusted so as not to extend beyond the width of the automobile.
[1993, c. 683, Pt. A, §2 (NEW); 1993, c. 683, Pt. B, §5 (AFF) .]

3. **Motorcycles.** A motorcycle must be equipped with a rear view mirror mounted and adjusted to afford the operator a clear, reflected view of the highway in the rear for a distance of at least 200 feet.
[2005, c. 577, §26 (AMD) .]
SECTION HISTORY
1993, c. 683, §A2 (NEW). 1993, c. 683, §B5 (AFF). 2005, c. 577, §26 (AMD).

29-A §1914. SAFETY SEAT BELTS

1. **Safety seat belts required.** A person may not buy, sell, lease, trade or transfer from or to a resident at retail a model year 1966 or later motor vehicle, unless that vehicle is equipped with safety seat belts installed for use in the left and right front seats.
[1993, c. 683, Pt. A, §2 (NEW); 1993, c. 683, Pt. B, §5 (AFF) .]
SECTION HISTORY
1993, c. 683, §A2 (NEW). 1993, c. 683, §B5 (AFF)

29-A §1915. WINDOWS

1. **Safety glass.** A motor vehicle must be equipped with safety glass wherever glass is used in partitions, doors, windows or windshields.
"Safety glass" means a product composed of glass or of other materials, manufactured, fabricated or treated to prevent shattering and flying of broken glass.
The Commissioner of Public Safety may maintain a list of the approved types of glass.
Replacements of glass partitions, doors, windows or windshields must be made with safety glass.
[1993, c. 683, Pt. A, §2 (NEW); 1993, c. 683, Pt. B, §5 (AFF) .]
MRS Title 29-A: MOTOR VEHICLES HEADING: PL 1993, c. 683, Pt. A, §2 (new); Pt. B, §5 (aff)
Chapter 17: EQUIPMENT
29-A §1916. Reflective and tinted glass | 287
2. **Window repairs.** When a window, other than the windshield, is broken, the operator may repair the window by temporarily replacing it with an opaque substance until there is a reasonable opportunity for replacement.
[1993, c. 683, Pt. A, §2 (NEW); 1993, c. 683, Pt. B, §5 (AFF) .]
SECTION HISTORY
1993, c. 683, §A2 (NEW). 1993, c. 683, §B5 (AFF).

29-A §1916. REFLECTIVE AND TINTED GLASS

1. **Windows to be unobscured.** A person may not operate a motor vehicle required to be registered in this State and an inspection mechanic may not issue a certificate of inspection for a motor vehicle, if:
A. A window is composed of, covered by or treated with any material that is reflective; [1993, c. 683, Pt. A, §2 (NEW); 1993, c. 683, Pt. B, §5 (AFF).]
B. The front windshield is composed of, covered by or treated with a material that reduces the light transmittance through the window more than the original installation window or an original replacement window; [1993, c. 683, Pt. A, §2 (NEW); 1993, c. 683, Pt. B, §5 (AFF).]
C. A side window or rear window is composed of, covered by or treated with a material that allows a light transmittance of less than 35% net of glass and material; or [2007, c. 186, §1 (AMD).]
D. A front windshield, front door window or window at either end of a rear passenger seat does not contain 2-way glass that provides the occupants with a clear view of the road and a person outside the vehicle with a clear view of the occupants and the interior of the vehicle. [1993, c. 683, Pt. A, §2 (NEW); 1993, c. 683, Pt. B, §5 (AFF).]
[2007, c. 186, §1 (AMD) .]

2. **Exceptions.** The following exceptions apply.
A. The provisions of subsection 1 do not apply to:
(1) A certificate or other paper required or allowed by law to be displayed;
(2) The label attached to a window showing the price, estimated mileage and other federally mandated information commonly known as the manufacturer's suggested retail price label;
(3) Sun-screening or window-tinting material above the AS-1 line in the top portion of the windshield or, if there is no AS-1 line in the top portion of the windshield, along a 5-inch strip at the top of the windshield. For purposes of this paragraph, "AS-1 line" means the marking that includes the letters "AS," the number "1" and an arrow that is required to be placed on certain safety glazing materials pursuant to 49 Code of Federal Regulations, Section 571.205 (2006); or
(4) Motor vehicles for which the Chief of the State Police has granted an exception because the health of the owner or a person who usually occupies the vehicle is adversely affected by sunlight. The Chief of the State Police may, upon proper application, provide the owner of a motor vehicle with a certificate of exemption that must be displayed upon the request of a law enforcement officer. [2007, c. 186, §2 (AMD).]
B. The provisions of subsection 1, paragraphs C and D do not apply to side windows behind the operator's seat or the rear window of a motor vehicle, as long as the vehicle is equipped with 2 outside rear view mirrors, one on each side, adjusted so that the operator has a clear view of the highway behind the vehicle.
[2009, c. 251, §6 (AMD).]
C. [2007, c. 348, §15 (RP).]

[2007, c. 186, §2 (AMD); 2007, c. 348, §15 (AMD); 2009, c. 251, §6
(AMD) .]

2-A. **Definition.**
[2009, c. 251, §7 (RP) .]

3. **Light transmittance certificate.** The owner or operator of a motor vehicle with tinted windows that are not replaced in accordance with Federal Motor Vehicle Safety Standard 205 or windows covered by or treated with tinting material must acquire a light transmittance certificate and must show the certificate to the inspection mechanic at the time of inspection.
The Chief of the State Police may authorize a person to examine window glazing and tint material to determine compliance with this subsection. A person authorized under this subsection may issue a certificate for a motor vehicle that complies with the light transmittance standards .
Upon request, the Bureau of State Police shall provide light transmittance certificates to a person authorized to issue a certificate under this subsection. Light transmittance certificates provided by the Bureau of State Police in accordance with this subsection remain the property of the State.
A person authorized to issue a certificate under this subsection who is adjudicated of a violation of this section or files an answer of "not contested" to a summons for a violation of this section shall return all unissued light transmittance certificates to the Bureau of State Police within 10 days of adjudication or of filing the answer. The Bureau of State Police may not provide that person with light transmittance certificates for a period of 6 months after the date of adjudication or filing an answer of "not contested."
[2007, c. 348, §16 (AMD) .]

4. **Violations.** A person may not:
A. Install a replacement window in or window-tinting material on a motor vehicle that does not meet the standards of subsections 1 and 2; [1993, c. 683, Pt. A, §2 (NEW); 1993, c. 683,
Pt. B, §5 (AFF).]
B. Fail to issue a certificate as required by subsection 3, after installing for compensation a tinted replacement window or window-tinting material; [1993, c. 683, Pt. A, §2 (NEW);
1993, c. 683, Pt. B, §5 (AFF).]
C. Alter the window-tinting materials after a certificate has been issued pursuant to subsection 3 and then display the certificate as proof that the windows meet the standards of subsection 1 or 2; [1993, c.
683, Pt. A, §2 (NEW); 1993, c. 683, Pt. B, §5 (AFF).]
D. Display or permit to be displayed a light transmittance certificate, knowing the certificate to be fictitious or issued to another motor vehicle or issued without the motor vehicle meeting the standards of subsection 1 or 2; [1993, c. 683, Pt. A, §2 (NEW); 1993, c. 683, Pt. B, §5
(AFF).]
E. Knowingly cause a light transmittance certificate to be issued for a motor vehicle that does not meet the standards of subsection 1 or 2; [1993, c. 683, Pt. A, §2 (NEW); 1993, c. 683,
Pt. B, §5 (AFF).]
F. Operate or cause the operation of a motor vehicle that does not meet the requirements of this section; or [1993, c. 683, Pt. A, §2 (NEW); 1993, c. 683, Pt. B, §5 (AFF).]
MRS Title 29-A: MOTOR VEHICLES HEADING: PL 1993, c. 683, Pt. A, §2 (new); Pt. B, §5 (aff)
Chapter 17: EQUIPMENT
29-A §1917. Tires and wheels | 289
G. Fail to return all unissued light transmittance certificates to the Bureau of State Police in accordance with subsection 3. [1993, c. 683, Pt. A, §2 (NEW); 1993, c. 683, Pt. B, §5
(AFF).]
[1993, c. 683, Pt. A, §2 (NEW); 1993, c. 683, Pt. B, §5 (AFF) .]

5. **Presumption.** If the operator of a motor vehicle with a tinted replacement window or window-tinting material installed fails to produce a certificate as required by subsection 3 on the request of a law enforcement officer, it is presumed that the motor vehicle does not meet the requirements of this section.
[1993, c. 683, Pt. A, §2 (NEW); 1993, c. 683, Pt. B, §5 (AFF) .]

6. **Penalty.** A person who is adjudicated of a violation of this section commits a traffic infraction that must be punished by a forfeiture of not less than $100.
[1993, c. 683, Pt. A, §2 (NEW); 1993, c. 683, Pt. B, §5 (AFF) .]

7. **Rules.** The Chief of the State Police may adopt rules to implement and administer this section and to collect reasonable fees for that administration.
[1993, c. 683, Pt. A, §2 (NEW); 1993, c. 683, Pt. B, §5 (AFF) .]
SECTION HISTORY
1993, c. 683, §A2 (NEW). 1993, c. 683, §B5 (AFF). 1997, c. 129, §§1,2 (AMD). 1999, c. 183, §6 (AMD). 2007, c. 186, §§1, 2 (AMD). 2007, c. 348, §§15, 16 (AMD). 2009, c. 251, §§6, 7 (AMD).

29-A §1917. TIRES AND WHEELS

1. **Definitions.** As used in this section, unless the context otherwise indicates, the following terms have the following meanings.
A. "Tread depth" means the amount of tread design on the tire. "Tread depth" includes original, retread and recap tread design and, in respect to a special mileage commercial tire, recut, regrooved and siped tread design. [1993, c. 683, Pt. A, §2 (NEW); 1993, c. 683, Pt. B, §5 (AFF).]
B. "Special mileage commercial tire" means a tire manufactured with an extra layer of rubber between the cord body and original tread design, which extra layer is designed for the purpose of recutting or regrooving, and which tire is specifically labelled as a "special mileage commercial tire." [1993, c. 683, Pt. A, §2 (NEW); 1993, c. 683, Pt. B, §5 (AFF).]
[1993, c. 683, Pt. A, §2 (NEW); 1993, c. 683, Pt. B, §5 (AFF) .]

2. **Safe tires required.** A motor vehicle may not be operated on a public way unless it is equipped with tires in safe operating condition. A tire mounted on a motor vehicle is not considered to be in safe operating condition unless it meets the visual and tread depth requirements set forth in subsections 3 and 4 , the overall diameter of the properly mounted and inflated tire is within 2 inches of the range of sizes recommended by the manufacturer for the model vehicle and the vehicle is in compliance with the frame height requirements provided in section 1920.
[2009, c. 251, §8 (AMD) .]

3. **Visual requirements.** A tire is not in safe operating condition if that tire has:
A. A fabric break or a cut in excess of one inch in any direction as measured on the outside of the tire and deep enough to reach the body cords; [1993, c. 683, Pt. A, §2 (NEW); 1993, c. 683, Pt. B, §5 (AFF).]
B. A temporary repair by the use of blowout patches or boots; [1993, c. 683, Pt. A, §2 (NEW); 1993, c. 683, Pt. B, §5 (AFF).]
C. A bump, bulge or knot related to separation or partial failure of the tire structure; [1993, c. 683, Pt. A, §2 (NEW); 1993, c. 683, Pt. B, §5 (AFF).]
D. A portion of the ply or cord structure exposed; or [1993, c. 683, Pt. A, §2 (NEW); 1993, c. 683, Pt. B, §5 (AFF).]
E. Sidewalls damaged to the extent that the body cords are damaged. [1993, c. 683, Pt. A, §2 (NEW); 1993, c. 683, Pt. B, §5 (AFF).]
[1993, c. 683, Pt. A, §2 (NEW); 1993, c. 683, Pt. B, §5 (AFF) .]

4. **Tread depth.** A tire is not in safe operating condition if it is worn to the point where less than 2/32 inch of tread design remains at all points at which gauge readings are required. Tread depth must be measured as follows.
A. Tire tread depth must be measured by a tread depth gauge that is calibrated in 1/32 inch. [1993, c. 683, Pt. A, §2 (NEW); 1993, c. 683, Pt. B, §5 (AFF).]
B. Readings must be taken in all major tread grooves and must include at least 2 points not closer than 15 inches. [2007, c. 348, §17 (AMD).]
C. Readings for a tire that has the tread design running across the tire or for a siped tire must be taken at or near the center of the tire at 2 points of the circumference not closer than 15 inches. [1993, c. 683, Pt. A, §2 (NEW); 1993, c. 683, Pt. B, §5 (AFF).]
[2007, c. 348, §17 (AMD) .]

5. **Exemptions.** A farm vehicle used exclusively for agricultural purposes, including, but not limited

to, a self-propelled combine, self-propelled corn and hay harvesting machine or tractor used exclusively for agricultural purposes, is exempt from this section.
[1993, c. 683, Pt. A, §2 (NEW); 1993, c. 683, Pt. B, §5 (AFF) .]

6. **Wheels.**
[2009, c. 251, §9 (RP) .]
SECTION HISTORY
1993, c. 683, §A2 (NEW). 1993, c. 683, §B5 (AFF). 2003, c. 146, §1 (AMD). 2005, c. 66, §1 (AMD). 2007, c. 348, §17 (AMD). 2009, c. 251, §§8, 9 (AMD).

29-A §1918. REGROOVED TIRES

A person commits a traffic infraction if that person distributes, has for sale, offers for sale, sells or uses on a motor vehicle a pneumatic tire that has been regrooved below the original tread depth, unless that tire was originally manufactured with extra undertread material. [1999, c. 771, Pt. C, §13 (AMD); 1999, c. 771, Pt. D, §§1, 2 (AFF).]
SECTION HISTORY
1993, c. 683, §A2 (NEW). 1993, c. 683, §B5 (AFF). 1999, c. 771, §C13 (AMD). 1999, c. 771, §§D1,2 (AFF).

29-A §1919. STUDDED TIRES

1. **Prohibited May 1st to October 1st.** Except as provided in subsections 2 and 3, from the first day of May to the first day of October, a person may not operate a vehicle with tires having metal studs, wires, spikes or other metal protruding from the tire tread. Pneumatic tires that feature embedded blocks, studs, flanges, cleats, spikes or other protuberances that are retractable may be used any time of the year, except that the protuberances may not be engaged or extended from the first day of May to the first day of October.
[2007, c. 525, §1 (AMD) .]

2. **Extension of use period and issuance of permit.** Extended use of studded tires may be permitted according to this subsection.
A. A person may use studded tires for periods other than those specified in subsection 1, if the Commissioner of Transportation extends the use period or, in a special case, issues a permit covering stated periods of time for the use of studded tires. The fee for a permit may not be less than $3 and not more than $15, as determined by the commissioner. [2003, c. 452, Pt. Q, §24 (NEW); 2003, c. 452, Pt. X, §2 (AFF).]
B. A person issued a permit under paragraph A must carry the permit in an easily accessible place in or about the vehicle. [2003, c. 452, Pt. Q, §24 (NEW); 2003, c. 452, Pt. X, §2 (AFF).]
[2003, c. 452, Pt. Q, §24 (NEW); 2003, c. 452, Pt. X, §2 (AFF) .]

3. **Application.** Subsection 1 does not apply to fire department vehicles or school buses during the months school is in regular session.
[2003, c. 452, Pt. Q, §24 (NEW); 2003, c. 452, Pt. X, §2 (AFF) .]
SECTION HISTORY
1993, c. 683, §A2 (NEW). 1993, c. 683, §B5 (AFF). 2003, c. 452, §X2 (AFF). 2003, c. 452, §Q24 (RPR). 2007, c. 525, §1 (AMD).

29-A §1920. VEHICLE FRAME HEIGHT

1. **Minimum and maximum frame end heights.** A motor vehicle may not be operated on a public way or receive a certificate of inspection with a frame end height of less than 10 inches or with the frame end height lower than the vehicle was originally manufactured if originally manufactured to be less than 10 inches. A motor vehicle may not be operated on a public way or receive a certificate of inspection with a maximum frame end height based on the manufacturer's gross vehicle weight rating that is greater than:
A. [2005, c. 276, §2 (RP).]
B. For a vehicle of 4,500 pounds and less, 24 inches in the front and 26 inches in the rear; [1993, c.

683, Pt. A, §2 (NEW); 1993, c. 683, Pt. B, §5 (AFF).]
C. For a vehicle of 4,501 pounds to 7,500 pounds, 27 inches in the front and 29 inches in the rear; and [1993, c. 683, Pt. A, §2 (NEW); 1993, c. 683, Pt. B, §5 (AFF).]
D. For a vehicle of 7,501 pounds to 10,000 pounds, 28 inches in the front and 30 inches in the rear. [1993, c. 683, Pt. A, §2 (NEW); 1993, c. 683, Pt. B, §5 (AFF).]
Measurements must be taken from a level surface to the bottom of the frame end. For the purposes of this subsection, "frame end" means the point at which the frame rail terminates at the bumper assembly.

2. **Modifications.** A vehicle may not be modified to cause, under normal operation, the vehicle body or chassis to come into contact with the ground, expose the fuel tank to damage from collision or cause the wheels to come in contact with the body. The suspension and tire sizes of a vehicle may be modified pursuant to this chapter and rules established by the Chief of the State Police.
[2005, c. 276, §2 (AMD) .]

3. **Suspension.** Except as provided in this subsection or in subsection 2, an original suspension system may not be disconnected. This section does not prohibit the installation of heavy duty equipment, including shock absorbers and overload springs, or prohibit a person from operating on a public way a motor vehicle with normal wear of the suspension system if normal wear does not affect control of the vehicle.
[2005, c. 276, §2 (AMD) .]
SECTION HISTORY
1993, c. 683, §A2 (NEW). 1993, c. 683, §B5 (AFF). 2003, c. 144, §1 (AMD). 2005, c. 276, §2 (AMD).

29-A §1921. TELEVISION PROHIBITED FROM VEHICLES

A person may not operate a motor vehicle equipped with a television viewer, screen or other means of visually receiving a television broadcast that is visible to the operator. This section does not apply to a law enforcement officer using a video camera or other video equipment for law enforcement purposes. [1995, c. 584, Pt. B, §7 (AMD).]
SECTION HISTORY
1993, c. 683, §A2 (NEW). 1993, c. 683, §B5 (AFF). 1995, c. 584, §B7 (AMD).

29-A §1922. ADVERTISEMENTS ON MOTOR VEHICLES

1. **Prohibition.** Except as provided in this section, an owner or operator may not operate on a public way a motor vehicle to which is affixed an illuminated advertisement.
[1993, c. 683, Pt. A, §2 (NEW); 1993, c. 683, Pt. B, §5 (AFF) .]

2. **Display rules.** For purposes of vehicle identification, in addition to the provisions of section 1951, a motor truck, truck tractor or semitrailer may display an illuminated sign in accordance with rules adopted by the Commissioner of Public Safety according to the Maine Administrative Procedure Act.
[1993, c. 683, Pt. A, §2 (NEW); 1993, c. 683, Pt. B, §5 (AFF) .]

3. **Standards.** Among other standards determined by the Commissioner of Public Safety to be necessary to protect the welfare and safety of the general public, an illuminated sign:
A. Must bear the name of the owner of the vehicle, the lessee of the vehicle or the person for which the operator is transporting property or goods; and [1993, c. 683, Pt. A, §2 (NEW); 1993, c. 683, Pt. B, §5 (AFF).]
B. May identify the cargo in transit. [1993, c. 683, Pt. A, §2 (NEW); 1993, c. 683, Pt. B, §5 (AFF).]
[1993, c. 683, Pt. A, §2 (NEW); 1993, c. 683, Pt. B, §5 (AFF) .]

4. **Location of sign.** An illuminated sign may only be displayed as follows:
A. On truck tractors, on the wind deflector on the roof of the truck tractor; [1993, c. 683, Pt. A, §2 (NEW); 1993, c. 683, Pt. B, §5 (AFF).]
B. On a semitrailer, on the front portion of the semitrailer; and [1993, c. 683, Pt. A, §2 (NEW); 1993, c. 683, Pt. B, §5 (AFF).]

C. On a truck, on the front portion of the storage compartment above and behind the cab. [1993, c. 683, Pt. A, §2 (NEW); 1993, c. 683, Pt. B, §5 (AFF).]
[1993, c. 683, Pt. A, §2 (NEW); 1993, c. 683, Pt. B, §5 (AFF) .]

5. **Lights prohibited.** An illuminated sign may not be lighted by a flashing, blinking or neon light.
[1993, c. 683, Pt. A, §2 (NEW); 1993, c. 683, Pt. B, §5 (AFF) .]

6. **Form, size and light of sign.** An illuminated sign must be in a form, size and light so as not to distract or impair the vision of the operator of another motor vehicle.
[1993, c. 683, Pt. A, §2 (NEW); 1993, c. 683, Pt. B, §5 (AFF) .]

7. **Exception.** This section does not apply to the illuminated name and telephone number identification affixed to vehicles for the conveyance of passengers.
[1993, c. 683, Pt. A, §2 (NEW); 1993, c. 683, Pt. B, §5 (AFF) .]
SECTION HISTORY
1993, c. 683, §A2 (NEW). 1993, c. 683, §B5 (AFF).

29-A §1923. READING WHILE OPERATING A MOTOR VEHICLE PROHIBITED

An operator may not read printed material including but not limited to, a newspaper, book, brochure or pamphlet, while operating a motor vehicle. Printed material does not include a map or written directions to a specific location. [1999, c. 183, §7 (NEW).]
SECTION HISTORY
1999, c. 183, §7 (NEW).

29-A §1924. CHAINS ON SKIDDERS
Chains attached to the tires or wheels of a skidder must be removed prior to operation on a paved way.
[1999, c. 183, §7 (NEW).]
SECTION HISTORY
1999, c. 183, §7 (NEW).**29-A §1925. EQUIPMENT REQUIREMENTS FOR LOW-SPEED VEHICLES**

1. **Equipment required.** A low-speed vehicle registered pursuant to section 501, subsection 11 must be equipped with:
A. Brakes for each wheel; [2003, c. 397, §9 (NEW).]
B. Headlights that comply with section 1904; [2003, c. 397, §9 (NEW).]
C. An odometer; [2003, c. 397, §9 (NEW).]
D. One exterior rearview mirror; [2003, c. 397, §9 (NEW).]
E. One interior rearview mirror; [2003, c. 397, §9 (NEW).]
F. A parking brake; [2003, c. 397, §9 (NEW).]
G. Rear reflectors; [2003, c. 397, §9 (NEW).]
H. A safety glass windshield; [2003, c. 397, §9 (NEW).]
I. A speedometer; [2003, c. 397, §9 (NEW).]
J. Stop lamps; [2003, c. 397, §9 (NEW).]
K. Rear lights that comply with section 1905; [2003, c. 397, §9 (NEW).]
L. Seat belts and child restraint systems that comply with section 2081; [2003, c. 397, §9 (NEW).]
M. Turn signal lamps; [2003, c. 397, §9 (NEW).]
N. Windshield wipers; and [2003, c. 397, §9 (NEW).]
O. A vehicle identification number. [2003, c. 397, §9 (NEW).]
[2003, c. 397, §9 (NEW) .]

2. **Working condition.** Equipment required in subsection 1 must be in good working condition.
§1925. Nitrous oxide system
(As enacted by PL 2003, c. 340, §4 is REALLOCATED TO TITLE 29-A, SECTION 1926)
[2003, c. 397, §9 (NEW) .]
SECTION HISTORY
2003, c. 340, §4 (NEW). 2003, c. 397, §9 (NEW). RR 2003, c. 1, §29 (RAL).

29-A §1926. NITROUS OXIDE SYSTEM

(REALLOCATED FROM TITLE 29-A, SECTION 1925)
1. **Definitions.** As used in this section, unless the context otherwise indicates, the following terms have the following meanings.
A. "Fill station" means a place that refills nitrous oxide bottles. [2005, c. 31, §1 (NEW).]
B. "Nitrous oxide system" means a device installed in a motor vehicle that allows nitrous oxide to combine with gasoline for the purpose of increasing engine power. [2005, c. 31, §1 (NEW).]
[2005, c. 31, §1 (RPR) .]

2. **Use prohibited.** Except as provided in subsection 3, a person may not operate a motor vehicle that is equipped with a nitrous oxide system on a public way.
[2003, c. 1, §29 (RAL) .]

3. **Exceptions.** A person may operate a motor vehicle equipped with a nitrous oxide system on a public way if:
A. All canisters of nitrous oxide have been removed from the vehicle; or [2003, c. 1, §29 (RAL).]
B. The motor vehicle is en route to or from a track where the motor vehicle is used for racing, a car show, an off-highway competition or event or a fill station and:
(1) The nitrous oxide system is made inoperative by disconnecting the line feeding nitrous oxide to the engine; or
(2) All containers of nitrous oxide have been removed from the motor vehicle. [2005, c. 31, §2 (AMD).]
[2005, c. 31, §2 (AMD) .]
SECTION HISTORY
RR 2003, c. 1, §29 (RAL). 2005, c. 31, §§1,2 (AMD).
Subchapter 2: TRUCKS HEADING: PL 1993,
C. 683, PT. A, §2 (NEW); PT. B, §5 (AFF)

29-A §1951. NAME OF OWNER OR LESSEE DISPLAYED

A truck tractor owner or operator shall display on both sides of the truck tractor the name of the owner or lessee in letters not less than 2 1/2 inches in height. [1993, c. 683, Pt. A, §2 (NEW); 1993, c. 683, Pt. B, §5 (AFF).]
SECTION HISTORY
1993, c. 683, §A2 (NEW). 1993, c. 683, §B5 (AFF).

29-A §1952. FLARES; EMERGENCY SIGNALS

1. **Carry flares.** Except as provided in subsection 1-A, a truck or truck tractor with a registration for operation with gross vehicle weight in excess of 10,000 pounds must be equipped with 2 red flags, 3 flares and 3 red lanterns or red emergency reflectors.
[2003, c. 452, Pt. Q, §25 (AMD); 2003, c. 452, Pt. X, §2 (AFF) .]

1-A. **Flares prohibited.** A vehicle transporting inflammable liquids or gas in bulk may not carry flares.
[2003, c. 452, Pt. Q, §26 (NEW); 2003, c. 452, Pt. X, §2 (AFF) .]

2. **Disabled vehicle.** When a truck or truck tractor with a registration for operation with gross vehicle weight in excess of 10,000 pounds is disabled on a public way, the operator shall, during the time that lights are required to be illuminated, place emergency signals as follows:
A. One flare or lantern or red emergency reflector in the center of the lane of traffic occupied by the disabled motor vehicle not less than 100 feet from the vehicle in the direction of traffic approaching in that lane; [1993, c. 683, Pt. A, §2 (NEW); 1993, c. 683, Pt. B, §5 (AFF).]
B. One flare or lantern or red emergency reflector not less than 100 feet from the vehicle in the center of the same lane in the opposite direction; and [1993, c. 683, Pt. A, §2 (NEW); 1993,

c. 683, Pt. B, §5 (AFF).]
C. One flare or lantern or red emergency reflector at the traffic side of the vehicle not closer than 10 feet from the front or rear. [1993, c. 683, Pt. A, §2 (NEW); 1993, c. 683, Pt. B, §5 (AFF).]
When lights are not required to be illuminated, red flags must be used, except that no flag is required to be placed at the side of the vehicle.
[1993, c. 683, Pt. A, §2 (NEW); 1993, c. 683, Pt. B, §5 (AFF) .]
SECTION HISTORY
1993, c. 683, §A2 (NEW). 1993, c. 683, §B5 (AFF). 2003, c. 452, §§Q25,26 (AMD). 2003, c. 452, §X2 (AFF).

29-A §1953. SPLASH GUARDS

1. **Required.** A truck, truck tractor, trailer and semitrailer must be equipped with suitable guards that will effectively reduce the spray or splash of mud, water or slush caused by the rear wheels.
[1993, c. 683, Pt. A, §2 (NEW); 1993, c. 683, Pt. B, §5 (AFF) .]

2. **Exception.** Splash guards are not required for:
A. A truck with a registered gross vehicle weight of 6,000 pounds or less; [1995, c. 584, Pt. A, §3 (AMD).]
B. A dump truck:
(1) While being operated on construction or reconstruction projects in a construction area established by the Department of Transportation; and
(2) On a public way between the project and a pit or quarry where materials are being obtained when the pit or quarry is within 7 miles of the construction area; [1993, c. 683, Pt. A, §2 (NEW); 1993, c. 683, Pt. B, §5 (AFF).]
C. A truck tractor when not hauling a trailer or semitrailer; [1993, c. 683, Pt. A, §2 (NEW); 1993, c. 683, Pt. B, §5 (AFF).]
D. A fire department vehicle; [1993, c. 683, Pt. A, §2 (NEW); 1993, c. 683, Pt. B, §5 (AFF).]
E. A motor vehicle equipped with fenders; or [1993, c. 683, Pt. A, §2 (NEW); 1993, c. 683, Pt. B, §5 (AFF).]
F. A truck with a stake body that extends not less than 6 feet beyond the rear axle and that is registered under section 505. [1993, c. 683, Pt. A, §2 (NEW); 1993, c. 683, Pt. B, §5 (AFF).]
[1995, c. 584, Pt. A, §3 (AMD) .]
SECTION HISTORY
1993, c. 683, §A2 (NEW). 1993, c. 683, §B5 (AFF). 1995, c. 584, §A3 (AMD).

29-A §1954. DUMP BODY SUPPORT

1. **Equipment.** A truck with a dump body must be equipped with a positive means of support, permanently attached and capable of being locked in position to prevent lowering of the body while being maintained, inspected or repaired or while the truck is unattended.
[2003, c. 340, §5 (NEW) .]

2. **Required.** A truck dump body must be either fully lowered, locked by means of equipment required in subsection 1 or physically blocked from lowering while being maintained, inspected or repaired or while the truck is unattended.
[2003, c. 340, §5 (NEW) .]

3. **Penalty.** A person who violates this section commits a Class E crime.
[2003, c. 340, §5 (NEW) .]
SECTION HISTORY
2003, c. 340, §5 (NEW).

Subchapter 3: MOTOR VEHICLE EVENT DATA RECORDERS HEADING: PL 2005, C. 544, §1 (NEW)

29-A §1971. DEFINITIONS

As used in this subchapter, unless the context otherwise indicates, the following terms have the following meanings. [2005, c. 544, §1 (NEW).]

1. **Event data recorder.** "Event data recorder" means a feature that is installed by the manufacturer of a motor vehicle and does one or more of the following for the purpose of capturing data for retrieval after a crash:
A. Records vehicle speed, direction or both; [2005, c. 544, §1 (NEW).]
B. Records vehicle location data; [2005, c. 544, §1 (NEW).]
C. Records vehicle steering performance; [2005, c. 544, §1 (NEW).]
D. Records vehicle brake performance, including whether brakes were applied before the crash; [2005, c. 544, §1 (NEW).]
E. Records the driver's seatbelt status; and [2005, c. 544, §1 (NEW).]
F. Has the ability to transmit information concerning a crash in which the motor vehicle has been involved to a central communication system when a crash occurs. [2005, c. 544, §1 (NEW).]
[2005, c. 544, §1 (NEW) .]

2. **Owner.** "Owner" means:
A. A person having all the incidents of ownership, including the legal title of the motor vehicle, whether or not the person lends, rents or creates a security interest in the motor vehicle; [2005, c. 544, §1 (NEW).]
B. A person entitled to the possession of the motor vehicle as the purchaser under a security agreement; or [2005, c. 544, §1 (NEW).]
C. A person entitled to possession of the motor vehicle as lessee pursuant to a written lease agreement, as long as the agreement at inception is for a period of at least 3 months. [2005, c. 544, §1 (NEW).]
[2005, c. 544, §1 (NEW) .]
SECTION HISTORY
2005, c. 544, §1 (NEW).

29-A §1972. OWNERSHIP AND ACCESS TO DATA

1. **Ownership; access.** Data described in section 1971, subsection 1 that are recorded on an event data recorder may not be downloaded or otherwise retrieved by a person other than the owner of the motor vehicle at the time the data are accessed, except under the following circumstances:
A. The owner of the motor vehicle or the owner's agent or legal representative consents to the retrieval of the information; [2005, c. 544, §1 (NEW).]
B. A court of competent jurisdiction in this State orders the production of the data; [2005, c. 544, §1 (NEW).]
C. For purposes of improving motor vehicle safety, security or traffic management, including medical research on the human body's reaction to motor vehicle crashes, as long as the identity of the owner or driver is not disclosed in connection with that retrieved data. For the purposes of this paragraph, the disclosure of the vehicle identification number with the last 4 digits deleted does not constitute the disclosure of the identity of the owner or driver; [2005, c. 544, §1 (NEW).]
D. The data are retrieved by a licensed motor vehicle dealer or by an automotive technician for the purpose of diagnosing, servicing or repairing the motor vehicle; [2005, c. 544, §1 (NEW).]
E. The data are retrieved for the purpose of determining the need for or facilitating emergency medical response in the event of a motor vehicle crash; [2005, c. 544, §1 (NEW).]
F. The data are retrieved by a law enforcement officer acting pursuant to authority recognized under applicable statutory or constitutional law; or [2005, c. 544, §1 (NEW).]
G. The data are requested as part of routine civil or criminal discovery. [2005, c. 544, §1 (NEW).]
[2007, c. 695, Pt. A, §34 (AMD) .]

2. **Release of data prohibited; exceptions.** A person, including a service or data processor operating on behalf of such person, authorized to download or otherwise retrieve data from the event data recorder pursuant to subsection 1, paragraph C may not release the data except:
A. For the purpose of motor vehicle safety and medical research communities to advance motor vehicle safety, security or traffic management; or [2005, c. 544, §1 (NEW).]
B. To a data processor solely for the purposes permitted by this subsection only if the identity of the owner or driver is not disclosed. [2005, c. 544, §1 (NEW).]
[2005, c. 544, §1 (NEW) .]

3. **Disclosure by subscription services.** If a motor vehicle is equipped with an event data recorder that is capable of recording or transmitting information described in section 1971, subsection 1 and that capability is part of a subscription service, the fact that the information may be recorded or transmitted must be disclosed in the subscription service agreement.
[2005, c. 544, §1 (NEW) .]

4. **Application concerning subscription services.** Subsection 1 does not apply to subscription services meeting the requirements of subsection 3.
[2005, c. 544, §1 (NEW) .]

5. **Duty to cooperate.** Nothing in this subchapter affects an insured's duty to cooperate as provided in an applicable insurance contract or agreement.
[2005, c. 544, §1 (NEW) .]
SECTION HISTORY
2005, c. 544, §1 (NEW). 2007, c. 695, Pt. A, §34 (AMD).

29-A §1973. DISCLOSURE BY MANUFACTURER

A manufacturer of a new motor vehicle sold or leased in this State that is equipped with one or more event data recorders, including those known as "sensing and diagnostic modules," shall disclose that fact in the owner's manual for the motor vehicle. [2005, c. 544, §1 (NEW).]
SECTION HISTORY
2005, c. 544, §1 (NEW).

Re-printed portion of MRSA Title 29-A of relevance to Motor Vehicle Inspections

The State of Maine claims a copyright in its codified statutes. If you intend to republish this material, we require that you include the following disclaimer in your publication:

All copyrights and other rights to statutory text are reserved by the State of Maine. The text included in this publication reflects changes made through the First Special Session of the 124th Legislature, and is current through December 31, 2009, but is subject to change without notice. It is a version that has not been officially certified by the Secretary of State. Refer to the Maine Revised Statutes Annotated and supplements for certified text.

The Office of the Revisor of Statutes also requests that you send us one copy of any statutory publication you may produce. Our goal is not to restrict publishing activity, but to keep track of who is publishing what, to identify any needless duplication and to preserve the State's copyright rights.

PLEASE NOTE: The Revisor's Office cannot perform research for
or provide legal advice or interpretation of Maine law to the public. If you need legal assistance, please contact a qualified attorney.

29-A §2054. EMERGENCY AND AUXILIARY LIGHTS; SIRENS; PRIVILEGES

Definitions. As used in this section, unless the context otherwise indicates, the following terms have the following meanings.

A. "Ambulance" means any vehicle designed, constructed and routinely used or intended to be used for the transportation of ill or injured persons and licensed by Maine Emergency Medical Services pursuant to Title 32, chapter 2-B. [1993, c. 683, Pt. A, §2 (NEW); 1993, c. 683, Pt. B, §5 (AFF).]

B. (CONFLICT: Text as amended by PL 2009, c. 317, Pt. F, §1) "Authorized emergency vehicle" means any one of the following vehicles:

(1) An ambulance;

(2) A Baxter State Park Authority vehicle operated by a Baxter State Park ranger;

(3) A Bureau of Marine Patrol vehicle operated by a coastal warden;

(4) A Department of Conservation vehicle operated by a forest ranger;

(5) A Department of Conservation vehicle used for forest fire control;

(6) A Department of Corrections vehicle used for responding to the escape of or performing the high-security transfer of a prisoner, juvenile client or juvenile detainee;

(7) A Department of Inland Fisheries and Wildlife vehicle operated by a warden;

(8) A Department of Public Safety vehicle operated by a police officer appointed pursuant to Title 25, section 2908, a state fire investigator or a Maine Drug Enforcement Agency officer;

(9) An emergency medical service vehicle;

(10) A fire department vehicle;

(11) A hazardous material response vehicle, including a vehicle designed to respond to a weapon of mass destruction;

(12) A railroad police vehicle;

(13) A sheriff's department vehicle;

(14) A State Police or municipal police department vehicle;

(15) A vehicle operated by a chief of police, a sheriff or a deputy sheriff when authorized by the sheriff;

(16) A vehicle operated by a municipal fire inspector, a municipal fire chief, an assistant or deputy chief or a town forest fire warden;

(17) A vehicle operated by a qualified deputy sheriff or other qualified individual to perform court security-related functions and services as authorized by the State Court Administrator pursuant to Title 4, section 17, subsection 15;

(18) A Federal Government vehicle operated by a federal law enforcement officer;

(19) A vehicle operated by a municipal rescue chief, deputy chief or assistant chief;

(20) An Office of the Attorney General vehicle operated by a detective appointed pursuant to Title 5, section 202; and

(21) A Department of the Secretary of State vehicle operated by a motor vehicle investigator.

[2009, c. 317, Pt. F, §1 (AMD).]
B. (CONFLICT: Text as amended by PL 2009, c. 421, §4) "Authorized emergency vehicle" means any one of the following vehicles:
(1) An ambulance;
(2) A Baxter State Park Authority vehicle operated by a Baxter State Park ranger;
(3) A Bureau of Marine Patrol vehicle operated by a coastal warden;
(4) A Department of Conservation vehicle operated by a forest ranger;
(5) A Department of Conservation vehicle used for forest fire control;
(6) A Department of Corrections vehicle used for responding to the escape of or performing the high-security transfer of a prisoner, juvenile client or juvenile detainee;
(7) A Department of Inland Fisheries and Wildlife vehicle operated by a warden;
(8) A Department of Public Safety vehicle operated by a capital security officer appointed pursuant to Title 25, section 2908, a state fire investigator or a Maine Drug Enforcement Agency officer;
(9) An emergency medical service vehicle;
(10) A fire department vehicle;
(11) A hazardous material response vehicle, including a vehicle designed to respond to a weapon of mass destruction;
(12) A railroad police vehicle;
(13) A sheriff's department vehicle;
(14) A State Police or municipal police department vehicle;
(15) A vehicle operated by a chief of police, a sheriff or a deputy sheriff when authorized by the sheriff;
(16) A vehicle operated by a municipal fire inspector, a municipal fire chief, an assistant or deputy chief or a town forest fire warden;
(17) A vehicle operated by a qualified deputy sheriff or other qualified individual to perform court security-related functions and services as authorized by the State Court Administrator pursuant to Title 4, section 17, subsection 15;
(18) A Federal Government vehicle operated by a federal law enforcement officer;
(19) A vehicle operated by a municipal rescue chief, deputy chief or assistant chief;
(20) An Office of the Attorney General vehicle operated by a detective appointed pursuant to Title 5, section 202;
(21) A Department of the Secretary of State vehicle operated by a motor vehicle investigator; and
(22) A University of Maine System vehicle operated by a University of Maine System police officer. [2009, c. 421, §4 (AMD).]
C. "Auxiliary light" means a light, other than standard equipment lighting such as headlights, taillights, directional signals, brake lights, clearance lights, parking lights and license plate lights, that is displayed on a vehicle and used to increase the operator's visibility of the road or the visibility of the vehicle to other operators and pedestrians. [1993, c. 683, Pt. A, §2 (NEW); 1993, c. 683, Pt. B, §5 (AFF).]
D. "Emergency light" means an auxiliary light displayed and used on an authorized emergency vehicle to distinguish it and make it recognizable as an authorized emergency vehicle. [1993, c. 683, Pt. A, §2 (NEW); 1993, c. 683, Pt. B, §5 (AFF).]
E. "Emergency medical service vehicle" means a vehicle equipped and used to transport emergency medical personnel or equipment to ill or injured persons and authorized by Maine Emergency Medical Services. [1993, c. 683, Pt. A, §2 (NEW); 1993, c. 683, Pt. B, §5 (AFF).]
E-1. "Fire department vehicle" means a vehicle owned by, registered to and maintained by a governmental agency or political subdivision that is equipped and used primarily for response to a fire or emergency situation. [2007, c. 348, §19 (NEW).]
F. "Fire vehicle" means any vehicle listed under paragraph B, subparagraph (5) or (16). [1993, c. 683, Pt. A, §2 (NEW); 1993, c. 683, Pt. B, §5 (AFF).]
G. "Hazardous material response vehicle" means a vehicle equipped for and used in response to reports of emergencies resulting from actual or potential releases, spills or leaks of, or other exposure to, hazardous substances that is authorized by a mutual aid agreement pursuant to Title 37-B, section 795, subsection 3 and approved by the local emergency planning committee or committees whose jurisdiction includes the area in which the vehicle operates. [1993, c. 683, Pt. A, §2 (NEW); 1993, c. 683, Pt. B, §5 (AFF).]
H. "Highway maintenance vehicle" means a vehicle used to maintain the highways, including, but not limited to, a plow, grader, sand truck, sweeper and tar truck. [1993, c. 683, Pt. A, §2

(NEW); 1993, c. 683, Pt. B, §5 (AFF).]
I. "Police vehicle" means any vehicle listed under paragraph B, subparagraph (2), (3), (4), (7), (8), (12), (13), (14) or (18). [1993, c. 683, Pt. A, §2 (NEW); 1993, c. 683, Pt. B, §5 (AFF).]
J. "Rescue vehicle" means any vehicle listed under paragraph B, subparagraph (19). [2005, c. 14, §2 (NEW).]
[2009, c. 317, Pt. F, §1 (AMD); 2009, c. 421, §4 (AMD) .]

2. **Authorized lights.** Authorized lights are governed as follows.
A. Only an ambulance; an emergency medical service vehicle; a fire department vehicle; a police vehicle; a Department of Conservation vehicle used for forest fire control; a Department of Corrections vehicle as described in subsection 1, paragraph B, subparagraph (6); and a highway maintenance vehicle may be equipped with a device that provides for alternate flashing of the vehicle's headlights. [1993, c. 683, Pt. A, §2 (NEW); 1993, c. 683, Pt. B, §5 (AFF).]
B. Only a police vehicle may be equipped with a device that provides for alternate flashing of the vehicle's brake or rear directional lights and back-up lights or strobe lights behind the rear brake lenses. [1995, c. 247, §4 (AMD).]
C. The use of amber lights on vehicles is governed by the following.
(1) A vehicle engaged in highway maintenance or in emergency rescue operations by civil defense and public safety agencies and a public utility emergency service vehicle may be equipped with auxiliary lights that emit an amber light.
(2) A wrecker must be equipped with a flashing light mounted on top of the vehicle in such a manner as to emit an amber light over a 360` angle. The light must be in use on a public way or a place where public traffic may reasonably be anticipated when servicing, freeing, loading, unloading or towing a vehicle.
(3) A vehicle engaged in snow removal or sanding operations on a public way must be equipped with and display an auxiliary light that provides visible light coverage over a 360` range. The light must emit an amber beam of light and be equipped with a blinking or strobe light function and have sufficient intensity to be visible at 500 feet in normal daylight. When the left wing of a plow is in operation and extends over the center of the road, an auxiliary light must show the extreme end of the left wing. That light may be attached to the vehicle so that the beam of light points at the left wing. The light illuminating the left wing may be controlled by a separate switch or by the regular lighting system and must be in operation at all times when the vehicle is used for plowing snow on public ways.
(4) A vehicle equipped and used for plowing snow on other than public ways may be equipped with an auxiliary rotary flashing light that must be mounted on top of the vehicle in such a manner as to emit an amber beam of light over a 360` angle, or an amber strobe, or combination of strobes, that emits at a minimum a beam of 50 candlepower and provides visible light coverage over a 360` range. The light may be in use on a public way only when the vehicle is entering the public way in the course of plowing private driveways and other off-highway locations.
(5) A rural mail vehicle may be equipped with auxiliary lights.
(a) The lights used to the front must be white or amber, or any shade between white and amber.
(b) The lights used to the rear must be amber or red, or any shade between amber and red.
(c) The lights, whether used to the front or rear, must be mounted at the same level and as widely spaced laterally as possible.
(d) The lights, whether used to the front or rear, must flash simultaneously.
(e) The lights must be visible from a distance of at least 500 feet in normal daylight.
(6) A vehicle used or provided by a contract security company to assist in traffic control and direction at construction or maintenance sites on a public way may be equipped with amber auxiliary lights.
(7) A Department of Public Safety vehicle operated by a motor carrier inspector or motor vehicle inspector may be equipped with auxiliary lights that emit an amber light.
(8) A vehicle used by an animal control officer appointed pursuant to Title 7, section 3947 may be equipped with auxiliary lights that emit a flashing amber light.
(9) A refuse, garbage or trash business vehicle used by an individual to transport refuse, garbage and trash may be equipped with auxiliary lights that emit a flashing amber light.
(10) A vehicle used by an individual to transport and deliver newspapers may be equipped with auxiliary lights that emit a flashing amber light. [2009, c. 251, §10 (AMD).]
D. Except as provided in this paragraph, a vehicle may not be equipped with or display a blue light.

(1) Emergency lights used on the following vehicles must emit a blue light or a combination of blue and white light: a police vehicle; a Department of Corrections vehicle as described in subsection 1, paragraph B, subparagraph (6); a vehicle operated by a chief of police, a sheriff or a deputy sheriff; and a vehicle operated by a qualified deputy sheriff or other qualified individual performing court security-related functions and services.
(2) Emergency lights used on an ambulance, an emergency medical service vehicle, a fire department vehicle or a hazardous material response vehicle may include one blue light mounted facing toward the rear of the vehicle so that the light is primarily visible to approaching traffic from the rear only.
(3) The taillight of a vehicle, or replica of a vehicle, manufactured prior to 1952 and registered under section 457, may contain a blue or purple insert of not more than one inch in diameter.
(4) Blue interior auxiliary lighting or dash lighting may be used on any vehicle if no portion of the beam of light is visible at a height of 42 inches above a surface parallel with the level surface on which the vehicle stands at a distance of 20 feet from any part of the vehicle. [2005, c. 183, §2 (AMD).]
E. [2003, c. 340, §7 (RP).]
F. Only vehicles listed in this paragraph, rural mail vehicles as provided in paragraph C, subparagraph (5) and school buses may be equipped with, display or use a red auxiliary or emergency light.
(1) Emergency lights used on an ambulance, an emergency medical service vehicle, a fire department vehicle, a fire vehicle, a rescue vehicle or a hazardous material response vehicle must emit a red light or a combination of red and white light.
(2) The municipal officers or a municipal official designated by the municipal officers, with the approval of the fire chief, may authorize an active member of a municipal or volunteer fire department to use one red or combination red and white flashing auxiliary light mounted as near as practicable above the front registration plate on the front of the vehicle, behind the rearview mirror or on the dashboard or 2 flashing red or combination red and white auxiliary lights mounted on the front of the vehicle above the front bumper and below the hood. The light or lights may be displayed but may be used only while the member is en route to or at the scene of a fire or other emergency. A light mounted on the dashboard or behind the rearview mirror must be shielded so that the emitted light does not interfere with the operator's vision. The use of lights may be revoked at any time by the fire chief.
(3) Members of an emergency medical service licensed by Maine Emergency Medical Services may display and use on a vehicle red or red and white combination flashing auxiliary lights of the same proportion, in the same location and under the same conditions as those permitted municipal and volunteer firefighters, when authorized by the chief official of the emergency medical service. The use of lights may be revoked at any time by the chief official of the emergency medical service. [2005, c. 299, §1 (AMD).]
G. A vehicle may be equipped with a spotlight. Only spotlights on authorized emergency vehicles, highway maintenance vehicles and public utility vehicles may be used on a public way, except any vehicle may use a spotlight in cases of necessity when other lights required by law fail to operate. [1993, c. 683, Pt. A, §2 (NEW); 1993, c. 683, Pt. B, §5 (AFF).]
H. A vehicle in a funeral procession may be equipped with a flashing light. The light must emit a yellow beam of light. The light may not be more than 5 inches in diameter and must be placed on the dashboard. The light must be shielded so that the emitted light does not interfere with the operator's vision. The flashing light may be used only when the vehicle is used in a funeral procession. In addition, a vehicle operated by a licensed funeral home and used as a lead vehicle in a funeral procession may use a device that provides for a white flashing strobe light in the front grille. [2007, c. 62, §1 (AMD).]
[2007, c. 62, §1 (AMD); 2009, c. 251, §10 (AMD) .]

3. **Sirens.** A bell or siren may not be installed or used on any vehicle, except an authorized emergency vehicle.
[1993, c. 683, Pt. A, §2 (NEW); 1993, c. 683, Pt. B, §5 (AFF) .]

4. **Right-of-way.** An authorized emergency vehicle operated in response to, but not returning from, a call or fire alarm or operated in pursuit of an actual or suspected violator of the law has the right-of-way when emitting a visual signal using an emergency light and an audible signal using a bell or siren. On the approach of any such vehicle, the operator of every other vehicle shall immediately draw that vehicle as near as practicable to the right-hand curb, parallel to the curb and clear of any intersection and bring it to a standstill until the authorized emergency vehicle has passed. A violation of this subsection is a Class E crime that,

notwithstanding Title 17-A, section 1301, is punishable by a minimum fine of $250 for the first offense and for a 2nd offense occurring within 3 years of the first offense a mandatory 30-day suspension of a driver's license. [1997, c. 162, §1 (AMD) .]

4-A. **Registered owner's liability for vehicle failing to yield right-of-way.** A person who is a registered owner of a vehicle at the time that vehicle is involved in a violation of subsection 4 commits a traffic infraction unless a defense applies pursuant to paragraph D. For purposes of this subsection, "registered owner" includes a person issued a dealer or transporter registration plate.

A. The operator of an authorized emergency vehicle who observes a violation of subsection 4 may report the violation to a law enforcement officer. If a report is made, the operator shall report the time and the location of the violation and the registration plate number and a description of the vehicle involved. The officer shall initiate an investigation of the reported violation and, if possible, contact the registered owner of the motor vehicle involved and request that the registered owner supply information identifying the operator of the registered owner's motor vehicle. [1997, c. 162, §2 (NEW).]
B. The investigating officer may cause the registered owner of the vehicle to be served with a summons for a violation of this subsection. [1997, c. 162, §2 (NEW).]
C. Except as provided in paragraph D, it is not a defense to a violation of this subsection that a registered owner was not operating the vehicle at the time of the violation. [1997, c. 162, §2 (NEW).]
D. The following are defenses to a violation of this subsection.
(1) If a person other than the registered owner is operating the vehicle at the time of the violation of subsection 4 and is convicted of that violation, the registered owner may not be found in violation of this subsection.
(2) If the registered owner is a lessor of vehicles and at the time of the violation the vehicle was in the possession of a lessee and the lessor provides the investigation officer with a copy of the lease agreement containing the information required by section 254, the lessee, not the lessor, may be charged under this subsection.
(3) If the vehicle is operated using a dealer or transporter registration plate and at the time of the violation the vehicle was operated by any person other than the dealer or transporter and if the dealer or transporter provides the investigating officer with the name and address of the person who had control over the vehicle at the time of the violation, that person, not the dealer or transporter, may be charged under this subsection.
(4) If a report that the vehicle was stolen is given to a law enforcement officer or agency before the violation occurs or within a reasonable time after the violation occurs and an investigation determines the vehicle was stolen, the registered owner may not be charged under this subsection. [1997, c. 162, §2 (NEW).]
[1997, c. 162, §2 (NEW) .]

5. **Exercise of privileges.** The operator of an authorized emergency vehicle when responding to, but not upon returning from, an emergency call or fire alarm or when in pursuit of an actual or suspected violator of the law may exercise the privileges set forth in this subsection. The operator of an authorized emergency vehicle may:

A. Park or stand, notwithstanding the provisions of this chapter; [1993, c. 683, Pt. A, §2 (NEW); 1993, c. 683, Pt. B, §5 (AFF).]

B. Proceed past a red signal, stop signal or stop sign, but only after slowing down as necessary for safe operation; [1993, c. 683, Pt. A, §2 (NEW); 1993, c. 683, Pt. B, §5 (AFF).]

C. Exceed the maximum speed limits as long as life or property is not endangered, except that capital security officers and employees of the Department of Corrections may not exercise this privilege; [2001, c. 360, §7 (AMD).]

D. Disregard regulations governing direction of movement or turning in specified directions; and [1993, c. 683, Pt. A, §2 (NEW); 1993, c. 683, Pt. B, §5 (AFF).]
E. Proceed with caution past a stopped school bus that has red lights flashing only:
(1) After coming to a complete stop; and
(2) When signaled by the school bus operator to proceed. [1993, c. 683, Pt. A, §2 (NEW); 1993, c. 683, Pt. B, §5 (AFF).]

Nothing in this subsection prohibits the operator of an authorized emergency vehicle from activating emergency lights for the limited purpose of warning motorists when entering or exiting structures designed to house the emergency vehicles.
[2003, c. 633, §5 (AMD) .]

6. **Emergency lights and audible signals.** The operator of an authorized emergency vehicle who is exercising the privileges granted under subsection 5 shall use an emergency light authorized by subsection 2. The operator of an authorized emergency vehicle who is exercising the privileges granted under subsection 5, paragraphs B, C, D and E shall sound a bell or siren when reasonably necessary to warn pedestrians and other operators of the emergency vehicle's approach.
[1993, c. 683, Pt. A, §2 (NEW); 1993, c. 683, Pt. B, §5 (AFF) .]

7. **Duty to drive with due regard for safety.** Subsections 4, 5 and 6 do not relieve the operator of an authorized emergency vehicle from the duty to drive with due regard for the safety of all persons, nor do those subsections protect the operator from the consequences of the operator's reckless disregard for the safety of others.
[1993, c. 683, Pt. A, §2 (NEW); 1993, c. 683, Pt. B, §5 (AFF) .]

8. **Standards for lights on highway maintenance vehicles.** The Commissioner of Transportation, with the consent of the Chief of the State Police, shall adopt standards and specifications for headlights, clearance lights, identification lights and other lights on highway maintenance vehicles. These standards must include prescribed usage for the various lights when a highway maintenance vehicle is in operation. The standards and specifications adopted pursuant to this section must correspond to and so far as practical conform with those approved by the national association of state highway officials. The standards and specifications adopted pursuant to this section are in addition to and do not supersede the lighting requirements established in subsections 1 to 7 and sections 1904 to 1909.

Highway maintenance vehicles owned by a municipality or performing maintenance under contract to a municipality must meet the lighting requirements established in subsections 1 to 7 and sections 1904 to 1909.

A municipality may adopt the standards and specifications developed in accordance with this subsection.
[1993, c. 683, Pt. A, §2 (NEW); 1993, c. 683, Pt. B, §5 (AFF) .]

9. **Stationary vehicles.** The operator of a vehicle passing a stationary authorized emergency vehicle using an emergency light or a stationary wrecker using its authorized lights, with due regard to the safety and traffic conditions, shall:

A. Pass in a lane not adjacent to that of the authorized emergency vehicle or wrecker, if possible; or
[2007, c. 348, §20 (AMD).]

B. If passing in a nonadjacent lane is impossible or unsafe, pass the emergency vehicle or wrecker at a careful and prudent speed reasonable for passing the authorized emergency vehicle or wrecker safely.
[2007, c. 348, §20 (AMD).]
A violation of this subsection is a traffic infraction for which a minimum fine of $250 must be adjudged.
[2007, c. 348, §20 (AMD) .]SECTION HISTORY
1993, c. 683, §A2 (NEW). 1993, c. 683, §B5 (AFF). 1995, c. 22, §1 (AMD). 1995, c. 65, §C6 (AMD). 1995, c. 247, §4 (AMD). 1995, c. 65, §§A153,C15 (AFF). 1997, c. 162, §§1,2 (AMD). 1999, c. 29, §2 (AMD). 2001, c. 10, §1 (AMD). 2001, c. 360, §§5-8 (AMD). 2003, c. 78, §§1,2 (AMD). 2003, c. 97, §1 (AMD). 2003, c. 209, §1 (AMD). 2003, c. 340, §7 (AMD). 2003, c. 451, §T14 (AMD). 2003, c. 510, §§C8,9 (AMD). 2003, c. 633, §§4,5 (AMD). 2005, c. 14, §§1-3 (AMD). 2005, c. 15, §1 (AMD). 2005, c. 183, §2 (AMD). 2005, c. 299, §1 (AMD). 2005, c. 314, §12 (AMD). 2005, c. 482, §4 (AMD). 2007, c. 11, §1 (AMD). 2007, c. 62, §1 (AMD). 2007, c. 348, §§18-20 (AMD). 2009, c. 251, §10 (AMD). 2009, c. 317, Pt. F, §1 (AMD). 2009, c. 421, §4 (AMD).

INDEX

NEW 26,000lb Rule For Inspection:
Section 115 Page 1
After Market Lighting Near Plate:
Section 190 Page 13
Air Bags And Air Bag Systems:
Section 170 Page 8
Section 200 Page 30
Air Brakes:
Section 115 Page 1
Section 200 Page 7, 10
Air Compressor:
Section 115 Page 5
Section 200 Page 8
Air Leakage:
Section 200 Page 8
Air Pressure Governor:
Section 200 Page 9
Air Reserve:
Section 200 Page 7
Air System:
Section 200 Page 7
Altered Vehicles: See Custom Vehicles
Anti-Lock Braking System:
Section 130 Page 3
Section 170 Page 2, 23, 26
Section 180 Page 12
Section 190 Page 1
Section 200 Page 1
Appeal Process:
Section 150 Page 4, 6
Section 160 Page 2
Application Mechanic:
Section 150 Page 1
Application Station:
Section 150 Page 3
Application Replacement And Tint Station:
Section 150 Page 5
Auto Cycle:
Section 100 Page 1
Back Up Lights:
Section 170 Page 14
Baffles:
Section 170 Page 9
Section 190 Page 10, 11
Ball Joints:
Section 100 Page 4
Section 170 Page 19, 20
Section 200 Page 21
Battery:
Section 170 Page 8
Section 200 Page 33
Body Components:
Section 170 Page 6
Section 190 Page 4
Section 200 Page 24, 25
Section 200 Page 38
Body Lifts:
Section 170 Page 23
Body Repairs And/Or Rust:
Section 170 Page 4, 6
Section 200 Page 27
Brakes:
Section 115 Page 4
Section 170 Page 1
Section 190 Page 1
Section 200 Page 1, 33
Cables:
Section 170 Page 5
Disc:
Section 170 Page 3
Section 190 Page 2
Section 200 Page 4
Drum:
Section 110 Page 4
Section 170 Page 2, 3, 4
Section 190 Page 1, 2, 3
Section 200 Page 4, 24,32, 34
Fluid:
Section 170 Page 3, 4
Section 190 Page 2, 3
Section 200 Page 4
Hoses:
Section 115 Page 4
Section 170 Page 4
Section 200 Page 6, 32
Brake Linings:
Section 110 Page 4
Section 170 Page 3
Section 190 Page 2
Section 200 Page 4
Cracked:

Section 170 Page 3, 4, 5, 20
Section 190 Page 2, 3
Riveted:
Section 170 Page 3
Section 190 Page 2
Wear:
Section 170 Page 3
Section 190 Page 3
Section 200 Page 4
Master Cylinder:
Section 170 Page 3
Section 190 Page 3
Section 200 Page 8
Mechanical Linkage:
Section 170 Page 5
Section 190 Page 3
Pads:
Section 110 Page 4
Section 170 Page 3
Section 190 Page 2
Section 200 Page 2, 4, 32

Parking Brake:
Section 100 Page 2
Section 170 Page 2, 3
Section 190 Page 4
Section 200 Page 5
Rotors:
Section 200 Page 4, 32
Service Brakes:
Section 170 Page 2
Section 190 Page 1
Section 200 Page 4, 32
Tubing:
Section 115 Page 4
Section 170 Page 4
Section 190 Page 3
Section 200 Page 32
Wedge:
Section 200 Page 4
Bulls Eye Fracture:
Section 170 Page 11
Section 200 Page 28
Bumpers:
Section 170 Page 7, 26, 28
Section 180 Page 2
Section 200 Page 25

Bushings:
Section 100 Page 4
Section 170 Page 20, 21, 24
Section 200 Page 2, 16, 24
Catalytic Converter:
Section 115 Page 4
Section 170 Page 9, 10
Check Valve:
Section 170 Page 4
Section 200 Page 5, 7
Class A Inspection:
Section 115 Page 1
Class B Inspection:
Section 115 Page 2
Class C Inspection:
Section 115 Page 2
Class D Inspection:
Section 115 Page 2
Class E Inspection:
Section 115 Page 2
Constant Velocity Joints:
Section 170 Page 21
Coupling Device:
Section 115 Page 5
Section 170 Page 24
Section 200 Page 11, 36
Critical Vision Area:
Section 100 Page 1
Section 170 Page 11
Section 200 Page 28
Cumberland County Inspections:
See Enhanced Inspections
Custom Vehicles:
Section 170 Page 25, 26, 27
Cv Joints:
Section 170 Page 21
Defect Card
Supplemental Info 3
Definitions:
Section 100
Doors:
Section 170 Page 10
Section 180 Page 5, 6, 8
Door Handles:
Section 170 Page 6,
Drag Link:
Section 200 Page 22,23
Drawbar/Tow Bar Eye:
Section 200 Page 13, 14, 36, 37
Electric Brakes:

Section 200 Page 4, 33
Emergency Brake:
Section 115 Page 4
Emergency Exit:
Section 180 Page 3, 7, 9
Section 200 Page 15
Enhanced Inspection Report:
See OBD Forms
Enhanced Inspection:
Section 100 Page1
Section 115 Page 2, 3
Enhanced Inspection Exemption New Vehicles:
Section 115 Page 7
Equipment, Required For Station:
Section 110 Page 3
Equipment Laws, Motor Vehicle:
Supplemental Info 10
Exhaust Leaks:
Section 170 Page 9
Section 200 Page 15
Fairings:
Section 190 Page 6
Fenders:
Section 170 Page 6, 7, 26, 27, 28
Section 180 Page 2
Section 190 Page 5
Section 200 Page 25
Fifth Wheels:
Section 170 Page 27
Section 200 Page 11, 12, 24, 37
Fleet Stations:
Section 110 Page 2
Floor:
Section 170 Page 6, 7, 26, 28
Section 180 Page 8, 9, 11
Section 200 Page 25, 30
Floor Pan:
Section 100 Page 2
Footrests:
Section 190 Page 6
Frame:
Section 115 Page 4, 5,
Section 170 Page 6, 23
Section 190 Page 7, 8, 9
Frame Heights:
Section 170 Page 28
Frame Mounting:
Section 200 Page 13
Front Forks:
Section 190 Page 8
Fuel Pipe Restrictor:
Section 115 Page 5
Section 170 Page 7
Fuel System:
Section 115 Page 5
Section 190 Page 11
Section 200 Page 16
Fuel Tank:
Section 170 Page 7
Section 190 Page 11
Section 200 Page 16
Gas Cap Pressure Test:
Section 115 Page 6
Gas Leak:
Section 170 Page 8
Glass:
Section 170 Page 11
Section 200 Page 29
Cloudiness:
Section 170 Page 11, 12
Section 200 Page 28, 29
Cracks:
Section 170 Page 11
Section 200 Page 31
Rear:
Section 170 Page 11, 12, 28,
Section 180 Page 8
Section 200 Page 31
Repair:
Section 170 Page 11, 13
Section 200 Page 30
Safety Glass:
Section 170 Page 10, 25, 27
Section 180 Page 8
Section 200npage 28
Side:
Section 170 Page 10, 12, 28,
Section 180 Page 8
Section 200 Page 28, 29
Tinting:
Section 170 Page 11, 12
Section 180 Page 8
Windshield:
Section 170 Page 10, 12, 27, 29, 31
Section 190 Page 6, 16

Glass cont.

Section 200 Page 28, 29, 38
Handhold:
Section 190 Page 6
Handlebar Controls:
Section 190 Page 9
Headlamps:
Section 200 Page 17
Aiming:
Section 170 Page 15
Supplemental Information 7
Height:
Section 170 Page 14
Moisture:
Section 170 Page 12, 16
Section 180 Page 7, 8
Section 200 Page 17
Hood Latch:
Section 170 Page 6
Section 200 Page 25
Horn:
Section 115 Page 4, 5
Section 170 Page 13
Section 180 Page 12
Section 190 Page 14
Section 200 Page 13, 31
Hydraulic Assists:
Section 200 Page 7
Hydraulic Brakes:
Section 170 Page 4
Section 200 Page 5
Inspection And Repair Laws:
Supplemental Info 9
Inspection Technician:
Section 120 Page 1
Change Of Employment:
Section 120 Page 1
Display Of License
Section 110 Page 1
Length Of License:
Section 150 Page 3
Manual:
Section 120 Page 1
Right To Hearing:
Section 160 Page 2
Suspension Or Revocation:
Section 160 Page 1, 2
Test Failure:
Section 150 Page 2
Testing:
Section 150 Page 1
Inspection Station:
Section 110 Page 1
Change Of Location:
Section 110 Page 3
Change Of Owner:
Section 110 Page 3
Display Of License:
Section 110 Page 1
Fleet Stations:
Section 110 Page 2
Free Of Debris:
Section 110 Page 4 Inspection
Fees:
Supplemental Info 1
License:
Section 110 Page 1, 2, 4
Length Of License
Section 150 Page 4
Manuals:
Section 110 Page 5
Out Of Business:
Section 110 Page 4
Premises:
Section 110 Page 3, 4
Section 150 Page 3, 5
Replacement Stations:
Section 130 Page 1
Not To Inspect:
Section 130 Page 1
Right To A Hearing
Section 160 Page 1
Suspension Or Revocation:
Section 160 Page 1, 2
Tools For Station:
Section 110 Page 3, 4, 5, 6
Warnings:
Section 160 Page 2
Window Tint Stations
Section 160 Page 1
Jack Stands:
Section 110 Page 4
King Pins:
Section 170 Page 19
Section 200 Page 20
Leaf Springs:
Section 170 Page 20, 21

Lens:

Broken:
Section 170 Page 13
Color:
Section 170 Page 16
Covered
Section 170 Page 14
Direction:
Section 170 Page 14
Missing:
Section 170 Page 15
Ordered Parts:
Section 170 Page 17
Tape Repair:
Section 170 Page 14
Lift Kits:
See Suspension Lifts
Lights:
Section 170 Page 13

Auxiliary:
Section 170 Page 14
Inoperable:
Section 200 Page 16
Led:
Section 190 Page 12
Lighting Devices:
Section 200 Page 16
Section 200 Page 33
Stop:
Section 170 Page 15
Section 180 Page 5
Section 190 Page 12
Section 200 Page 18, 34
Turn Signals:
Section 170 Page 14
Section 190 Page 12
Section 200 Page 18, 34
Registration Plate:
Section 170 Page 9
Section 190 Page 13
Section 200 Page 18, 34
School Bus:
Section 180 Page 5
Taillights:
Section 170 Page 15
Also See Headlamps
Linkage Play:
Section 170 Page 19
Luggage Racks:
Section 190 Page 6
Malfunction Indicator Light(Mil):
Section 110 Page 4, 6
Mobile Glass Replacement:
Section 130 Page 1
Muffler:
Motor Vehicle:
Section 170 Page 9, 10
Commercial:
Section 200 Page 15
Custom Vehicle:
Section 170 Page 29
Motorcycle:
Section 190 Page 10, 11
Partial Inspection:
Section 140 Page 2
Section 200 Page 38
Supplemental Info 5
Pedal Reserve:
Section 100 Page 3
Section 170 Page 4
Section 190 Page 2
Periodic Inspection Report:
Section 200 Page 39
Pintle Hooks:
Section 200 Page 13
Pitman Arm:
Section 170 Page 18
Section 200 Page 22
Plate Light: See Lights, License Plate
Power Steering Fluid Leak:
Section 170 Page 18
Section 200 Page 22
Rack And Pinion:
Section 170 Page 18
Rake Or Castor Angle:
Section 190 Page 7
Rear End Protection:
Section 200 Page 25, 27
Rear View Mirrors:
Section 170 Page 12
Section 180 Page 4
Section 200 Page 31
Reflectors:
Section 170 Page 16
Section 180 Page 13
Section 190 Page 14, 16
Section 200 Page 19, 34, 38
Reflex:

Section 170 Page 13, 14
Section 200 Page 16, 38
Registration Plates:
Section 115 Page 3
Section 170 Page 9Horizontal
Display:
Section 170 Page 9
Lost:
Section 170 Page 9
Registration Abbreviation Codes
Supplemental 4
Retro Reflective Sheeting:
Section 200 Page 19, 38
Rim:
Section 170 Page 24
Section 190 Page 13, 15
Section 200 Page 24, 26, 27, 28, 35
Rust:
Section 170 Page 6
Section 200 Page 25
Saddle Mounts:
Section 200 Page 15
Safety Belts Or Seat Belts:
Section 170 Page 8, 9, 10
Section 180 Page 10
Section 190 Page 16
Safety Glass:
See Glass
School Bus:
Section 180 page 1
Color:
Section 180 Page 3
Dash Instruments:
Section 180 Page 12
Fire Extinguishers:
Section 180 Page 12
Hazard Warning Kit:
Section 180 Page 13
Interior:
Section 180 Page 10, 11
Lettering And Signs:
Section 180 Page 3, 9
Manuals:
Section 110 Page 5
Mirrors:
Section 180 Page 4
Out Of Service Criteria:
Supplemental Info 8
Passenger Seats:
Section 180 Page 10
Roof Hatch:
Section 180 Page 7
Stickers:
Section140 Page 3, 4
Stop Arms And Lights:
Section 180 Page 5, 6
Warning Lights:
Section 180 Page 5
Windshield Defroster:
Section 180 Page 12
Seats:
Section 170 Page 7
Section 180 Page 10
Section 190 Page 5, 6
Section 200 Page 29
Sequence Of Inspection:
Section 115 Page 3
Class A:
Section 115 Page 4
Class C:
Section 115 Page 5
Class D:
Section 115 Page 4
Class E:
Section 155 Page 6
Fee For Inspections:
Supplemental Info 1
Shock Absorbers:
Section 170 Page 21
Section 190 Page 8
Sign Display:
Section 110 Page 1
Slack Adjusters:
Section 200 Page 11
Specially Constructed Motorcycle:
Section 190 Page 16
Special Mobile Equipment:
Section 200 Page 38, 39
Splashguards:
Section 200 Page 37
Spokes:
Section 190 Page 15
Spring Shackles:
Section 170 Page 23
Springs:
Section 170 Page 20, 21, 22
Section 180 Page 9
Section 190 Page 6

Section 200 Page 2
Sprocket:
Section 190 Page 5
Stabilizer Bar:
Section 170 Page 20
Straight Pipes:
Section 190 Page 11
Stands:
Section 190 Page 5
Steering:
Section 170 Page 17
Section 190 Page 8, 10
Section 200 Page 20, 21, 23
Alignment:
Section 170 Page 17
Section 190 Page 10
Auxiliary:
Section 200 Page 22
Column:
Section 170 Page 21
Section 200 Page 20, 21
Fluid:
Section 170 Page 18
Section 200 Page 22
Gearbox:
Section 200 Page 21, 23
Head
Section 190 Page 8
Lash:
Section 170 Page 18
Modifications;
Section 200 Page 23
Tilt Wheel:
Section 170 Page 21
Welds:
Section 200 Page 20
Stickers:
Section 140
Altered By Mechanic:
Section 140 Page 2
Diagonally Cut:
Section 115 Page 4
Section 120 Page 1
Section 140 Page 2
Expiration:
Section 140 Page 3
Handing:
Section 110 Page 2
Issuance:
Section 140 Page 1
Ordering:
Section 140 Page 1
Replacement:
Section 130 Page 1
School Bus:
Section 140 Page 3
Security:
Section 110 Page 2
Theft Or Loss:
Section 110 Page 3
Section 140 Page 3
Trailer:
Section 140 Page 4
Voided:
Section 140 Page 3
Street Rods:
Section 170 Page 23, 27, 27, 28, 29
Stub Sheets:
Section 110 Page 2
Section 140 Page 2
Supplemental Info 2
Sun Visor:
Section 170 Page 13
Section 200 Page 31
Suspension Lift Or Lowering:
170 Page 23
Switches:
Section 170 Page 16
Section 190 Page 11
Section 200 Page 19, 35
Tie Rod:
Section 170 Page 18
Section 200 Page 3, 22
Tires:
Section 170 Page 22, 27, 29
Section 190 Page 15
Section 200 Page 26, 27, 24, 35
Non Steering Axle:
Section 200 Page 4, 26
On Power Unit:
Section 200 Page 26, 27,
Removal For Inspection:
Section 190 Page 1
Size:
Section 170 Page 24
Supplemental Info 6
Steering Axle:

Section 200 Page 25, 27
Studded:
Section 170 Page 24

Torsion Bar:
Section 170 Page 20, 21, 24, 36
Section 25, 28
Trail:
Section 190 Page 7, 8
Vacuum System:
Section 200 Page 6
Vehicle:
Class:
Section 115
Exterior:
Section 170 Page 6
Heights:
Section 170 Page 23
Identification Number:
Section 115 Page 3
Section 140 Page 1
Section 200 Page 39
Wear Indicators:
Ball Joints:
Section 170 Page 19, 20, 21, 22
Section 200 Page 21
Brakes:
Section 200 Page 4
Tires:
Section 190 Page 14
Welds:
Section 190 Page 9
Section 200 Page 12, 13, 20, 22, 28
Section 200 Page 37, 35
Wheels:
Section 170 Page 23, 24
Section 190 Page 15
Section 200 Page 25, 27, 35
Wheel Bearings:
Section 170 Page 22
Section 190 Page 8
Section 200 Page 23
Windows:
See Glass
Windshield Wipers:
Section 170 Page 12, 26, 29,
Section 200 Page 31
Wiring:
Section 190 Page 14
Section 200 Page 19, 35