(c) **HAY** - Hay shall be placed above the stone to prevent sand infiltration and clogging. The hay layer shall not exceed one (1) inch in thickness.

(d) **TOP SOIL COVER** - Three (3) inches to six (6) inches of loamy soil shall be placed over the disposal system and seeded with grass.

SEC. 8.9 RESERVE AREA

Additional area with suitable soil conditions should be reserved for possible expansion or replacement.

CHAPTER 9

APPROVED PRIVATE SEWAGE DISPOSAL SYSTEMS

SEC. 9.1 An approved private sewage disposal system shall consist of one of the three systems listed. Approval of any of the three systems for a particular site shall be dependent on: The soils and groundwater characteristics of the site, and the particulars of facilities to be served.

SEC. 9.2 COMBINED SYSTEM

Under suitable soil conditions as specified in Table 9-1, a combined human waste and gray water waste, on-site treatment and disposal facility shall consist of the following minimum components.

(1) **A BUILDING SEWER** -- Refer to Chapter 6.

(2) **A TREATMENT TANK** -- Refer to chapter 7.

(3) **SUBSURFACE ABSORPTION AREA** -- Refer to Sections 9.5, and 9.6 through 9.9.

SEC. 9.3 SEPARATED SYSTEM

Under suitable soil conditions as specified in Table 9-1, an owner may handle human wastes by the methods and devices specified in Sections 9.12 - 9.15 and handle gray waste water separately by a modified on-site treatment and disposal facility. The modified treatment and disposal facility shall consist of the following minimum components.

(1) **BUILDING SEWER** -- Refer to Chapter 6.

(2) **TREATMENT TANK** -- Refer to Chapter 7.

(3) **SUBSURFACE ABSORPTION AREA** -- Refer to Sections 9.5, and 9.6 through 9.10.

SEC. 9.4 NON-DISCHARGE SYSTEMS

Under unsuitable soil conditions as specified in Table 9-1 but not a flood plain, an owner shall handle wastes by the methods and devices specified in Sections 9.5 and 9.11.

SEC. 9.5 PERMITTED PRIVATE SEWAGE DISPOSAL SYSTEM

The entries in Table 9-1 designate the type and size system permitted to be installed, for the various soils.

Systems Designated in Table 9-1

SYSTEM DESIGNATION		SECTION OF CODE
TRENCHES	Combined and Separated	Sec. 9.6
BEDS	Combined and Separated	Sec. 9.7
CHAMBERS	Combined and Separated	Sec. 9.8
MOUNDS	Combined and Separated	Sec. 9.9
SPECIAL	Separated Only	Sec. 9.10
NON DISCHARGE	Combined and Separated	Sec. 9.11

Each of the Sections referred to above will indicate requirements for a Combined and Separated System if those systems are permitted and approvable.

TABLE 9—1 Soil conditions → Type and size of systems permitted

SOIL GROUPS ↓ / BEDROCK AND GROUNDWATER CONDITIONS →	A: Shallow to Bedrock (15" to 40" Deep) NOTE: If depth to Bedrock is less than 15" below the bottom of the organic horizon a N.D. System is required.	B: Seasonal groundwater at greater than 40" below the bottom of the organic horizon.	C: Seasonal groundwater at 15" to 40" below the bottom of the organic horizon.	D: Seasonal groundwater at 0" to 15" below the bottom of the organic horizon.	E: Seasonal ground water ponding on the surface
1 Deep **loamy (>15% sand < 35% clay)	MEDIUM LARGE Trench, Bed, Chamber or Special System | *Thorndike *Mapleton *Benson	MEDIUM LARGE Trench, Bed, Chamber or Special System | Bangor Caribou *Linneus Berkshire	LARGE Bed, Mound or Special System | Dixmont Conant Sutton	Non discharge System | Monarda Easton Leicester	Non discharge System | Burnham Washburn Whitman
2 Deep **loose loamy (>15% sand < 35% clay)	MEDIUM Trench, Bed, Chamber or Special System | Lyman Hollis	MEDIUM Trench, Bed, Chamber or Special System | Charlton	MEDIUM LARGE Trench, Bed, Chamber or Special System	Non discharge System	Non discharge System
3 loamy 40" deep (>15% sand < 35% clay) over Impervious strata e.g. clay, pan.		LARGE Bed, Mound or Special System | Perham Plaisted Potsdam Marlow Paxton Becket Melrose	EXTRA LARGE Mound or Special System | Daigle Howland Crary Peru Woodbridge Skorry Elmwood	Non discharge System | Monarda Ridgebury Swanton	Non discharge System | Burnham Whitman Whately
4 loamy (>15% sand < 35% clay) over Sandy and/or gravelly		SMALL Trench, Bed, Chamber or Special System | Canton	MEDIUM Trench, Bed, Chamber or Special System	Non discharge System	Non discharge System
5 Deep **sandy and/or gravelly >70% sand <15% clay <30% silt	SMALL Trench, Bed, Chamber or Special System | Canaan	SMALL Trench, Bed, Chamber or Special System | Hermon Gloucester	SMALL Trench, Bed, Chamber or Special System | Waumbek	Non discharge System	Non discharge System

Deep **loose sandy and/or gravelly ≥ 85% sand ≤ 10% clay ≤ 15% silt 6		VERY SMALL Trench, Bed, Chamber or Special System Cotton, Hinckley, Adams, Windsor, Merrimac, Agawam, Stetson, Allagash	VERY SMALL Trench, Bed, Chamber or Special System Duane, Crogham, Deerfield, Sudbury, Ninigret, Machias, Madawaska, Skowhegan	Non discharge System AuGres, Saugatuck, Fredon, Red Hook, Walpole	Non discharge System Scarboro, Halsey, Atherton
Deep **silty (≤ 15% sand < 35% clay) 7		LARGE Bed, Mound or Special System Salmon, Hartland	LARGE Bed, Mound or Special System Nicholville, Belgrade	Non discharge System Raynham, Canandaigua	Non discharge System
Deep** Silty and Clayey (>35% clay) 8		EXTRA LARGE Mound or Special System Suffield	EXTRA LARGE Mound or Special System Buxton	Non discharge System Scantic	Non discharge System Biddeford
RECENT FLOOD PLAINS Alluvial Soils 9	NONE Suncook	NONE Hadley, Ondawa	NONE Winooski, Podunk	NONE Limerick, Rumney	NONE Saco
Organic Soils: Muck, Peat, Swamp, Bog, Marsh (Fresh & Tidal Water) 10	NONE	NONE	NONE	NONE	NONE
11 Made Land - Cut and Fill	When a site consists of made land, cut and fill land and similar situations, the suitability of the site shall be determined by an on-site investigation. The site investigation report shall list the identity and characteristics of both the fill and the soil the fill was placed on. The more limiting of the two, fill and original soil, shall be the criteria for whether a system can be permitted and which systems and size systems are approvable.				
Notes:	1. *Fractured or Limestone bedrock - No trenches allowed. 2.** Deep soils are those soils where the texture is similar for at least 40 inches or until bedrock is encountered. This is in contrast to soils which are not marked deep, e.g. loamy, where distinct textural changes are present within a 40 inch depth. 3. > means greater than; < means less than. 4. The soil groups are identified primarily through the various particle size percentages as depicted in Table 9-2, Guide for Textural Classification in Soil Families. 5. The water table, impervious layer, and bedrock conditions as described in A through E above, are further defined in Section 4.3 and 8.7.				

TABLE 9-2

GUIDE FOR TEXTURAL CLASSIFICATION IN SOIL FAMILIES

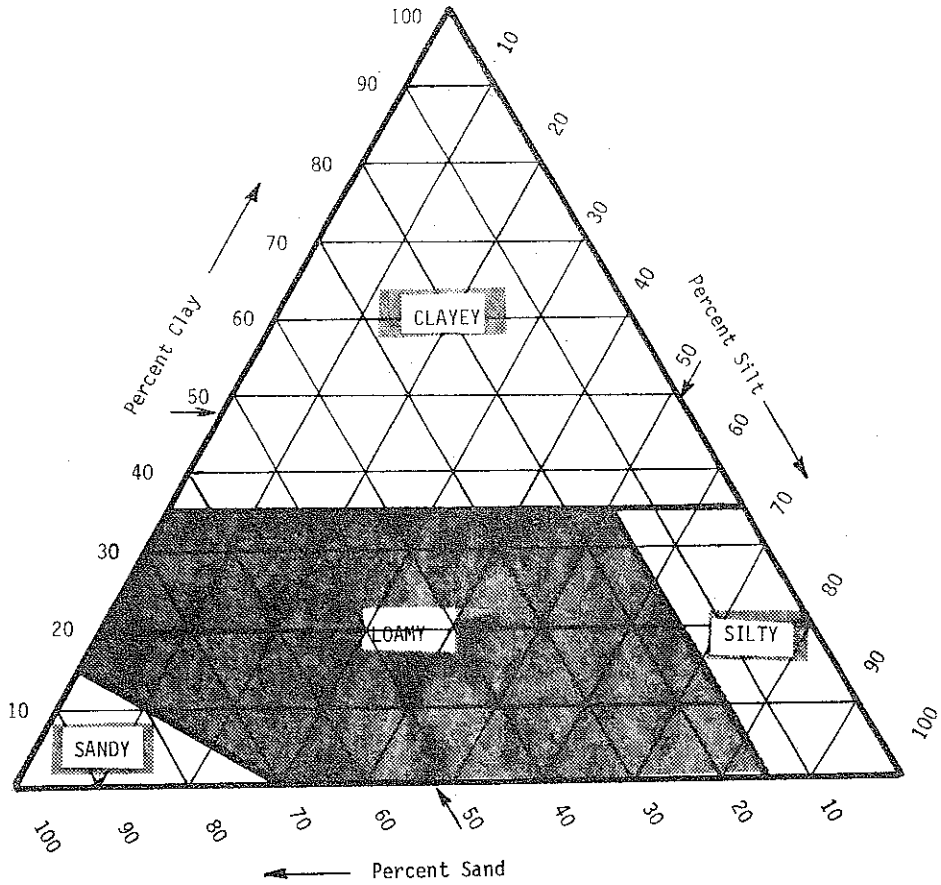

COMPARISON OF PARTICLE SIZE SCALES

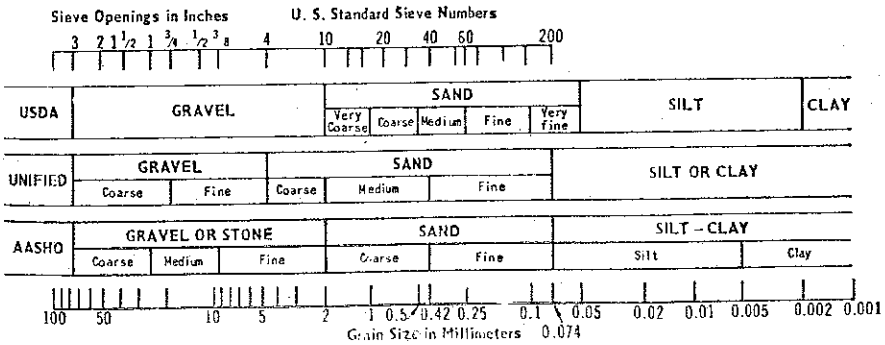

TRENCHES Sec. 9.6

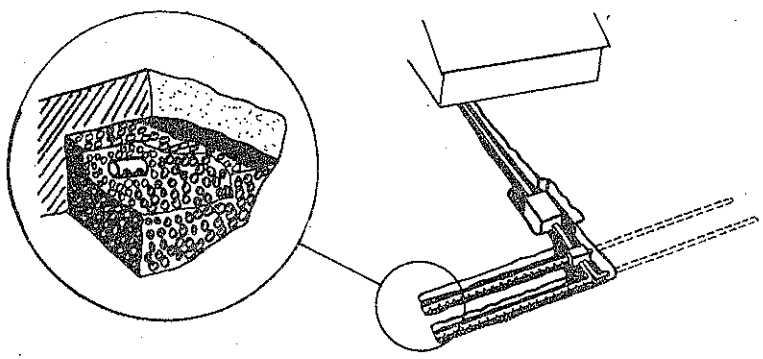

PLAN VIEW

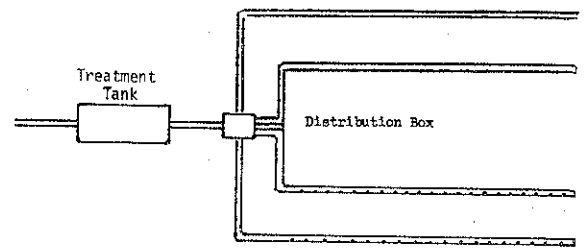

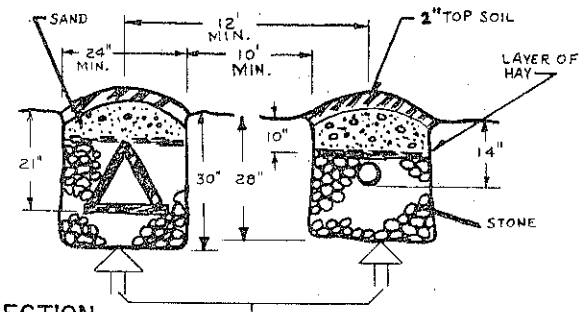

CROSS SECTION

The bottom of the trenches shall be at 2 to 2.5 feet above the seasonal high groundwater, bedrock, and impervious layer. Refer to tables below for exact minimum dimensions.

sec. 9.6a

SHALLOW ABSORPTION TRENCHES - DETAILS - Disposal trenches shall be constructed in accordance with the following table:

Maximum length of line	100 feet
Minimum diameter of distribution line	4 inches
Maximum slope of percolation line	2 inches in 100 feet
Minimum width of trench bottom	2 feet
Minimum distance of undisturbed earth between trenches	10 feet
Maximum depth of invert of percolation line	14 (4" pipe) to 21 (trough) inches
Minimum depth of top of percolation line	7 (trough) to 10 (4" pipe) inches
Minimum depth of stones below the invert of percolation line	9 (trough) to 14 (4" pipe) inches

SINGLE FAMILY DWELLINGS

sec. 9.6b COMBINED SYSTEMS

All waste water: human waste & gray waste water

The length of disposal trench required for 1 to 5 bedroom single family dwellings for each system size rating.

SYSTEM SIZE RATING	RANGE OF TRENCH LENGTHS REQUIRED IN FEET	MINIMUM DISTANCE BELOW THE BOTTOM OF BEDS OR TRENCHES TO HIGHEST SEASONAL GROUNDWATER, BEDROCK AND IMPERVIOUS LAYER
Very Small	84 lin. Ft.	2 Feet
Small	100-133 lin. Ft.	2 Feet
Medium	166-200 lin. Ft.	2 Feet
Medium Large	233-300 lin. Ft.	2.5 Feet
Large	Not Permitted	———
Extra Large	Not Permitted	———

EXAMPLE: A 3 bedroom single family dwelling located on a site requiring a medium size system (Table 9-1) requires 166-200 linear feet of sewage disposal trench.

sec. 9.6c SEPARATED SYSTEM

Human waste handled by methods permitted in sec. 9.3 This system to handle gray waste water only.

The length of disposal trench required for 1 to 5 bedroom single family dwellings for each system size rating.

SYSTEM SIZE RATING	RANGE OF TRENCH LENGTHS REQUIRED IN FEET	MINIMUM DISTANCE BELOW THE BOTTOM OF BEDS OR TRENCHES TO HIGHEST SEASONAL GROUNDWATER, BEDROCK AND IMPERVIOUS LAYER
Very Small	55 lin. Ft.	2 Feet
Small	65-87 lin. Ft.	2 Feet
Medium	108-130 lin. Ft.	2 Feet
Medium Large	151-195 lin. Ft.	2.5 Feet
Large	Not Permitted	———
Extra Large	Not Permitted	———

EXAMPLE: A 3 bedroom single family dwelling using a vault privy located on a site requiring a medium size system (Table 9-1) requires 108-130 linear feet of sewage disposal trench to take care of the gray water.

sec. 9.6d SERVING OTHER FACILITIES

SYSTEM SIZE RATING	RANGE OF TRENCH LENGTH REQUIRED FOR DOMESTIC WASTE ONLY IN LINEAR FEET	MINIMUM DISTANCE BELOW THE BOTTOM OF BEDS OR TRENCHES TO HIGHEST SEASONAL GROUNDWATER, BEDROCK, AND IMPERVIOUS LAYER
Very Small	0.28 lin. ft./gpd	2 Feet
Small	0.33-0.44 lin. ft./gpd	2 Feet
Medium	0.55-0.67 lin. ft./gpd	2 Feet
Medium Large	0.78-1.00 lin. ft./gpd	2.5 Feet
Large	Not Permitted	———
Extra Large	Not Permitted	———

When the waste is of a quality different from normal domestic waste, the values in the adjoining table shall be multiplied by the following factor $\sqrt{\frac{BOD_5+SS}{240}}$

This factor shall not be used if its value is less than one.

BEDS Sec.9.7

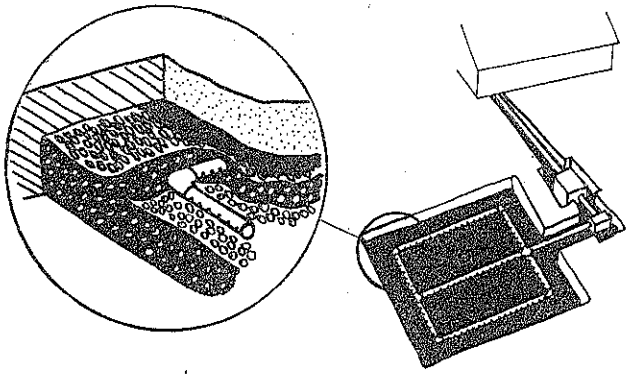

PLAN VIEW

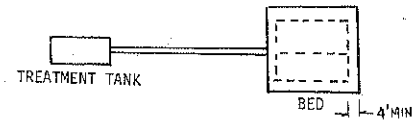

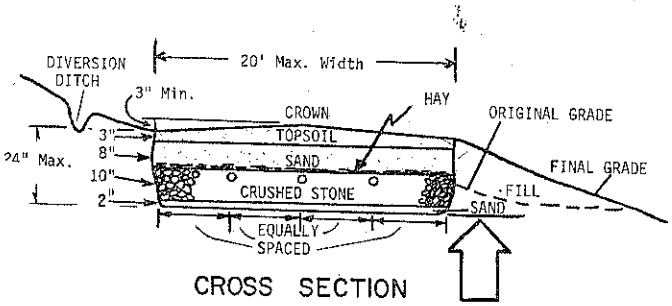

CROSS SECTION

The bottom of the beds shall be at 2 to 3.5 feet above the seasonal high groundwater, bedrock, and impervious layer. Refer to tables below for exact minimum dimensions.

sec. 9.7a

SHALLOW BEDS - DETAILS - Beds shall be constructed in accordance with the following table:	
Minimum diameter of percolation line	4 inches
Maximum slope of percolation line	2 inches in 100 feet
Minimum width of bed bottom	15 feet
Minimum distance of undisturbed earth between beds (if more than one is used)	40 feet
Maximum depth of invert of percolation line from top of sand layer	12 inches
Minimum depth of stones below the invert of percolation line	6 inches
Minimum depth of sand above the percolation line	8 inches
Minium depth of sand below the stone layer	2 inches

SINGLE FAMILY DWELLINGS

sec. 9.7b COMBINED SYSTEMS

All waste water: human waste & gray waste water

The minimum area in square feet of approved shallow absorption bed for 1 to 5 bedroom single family dwellings for each system size rating shall be as follows:

SYSTEM SIZE RATING	RANGE OF BED SIZES REQUIRED IN SQUARE FEET	MINIMUM DISTANCE BELOW THE BOTTOM OF BEDS OR TRENCHES TO HIGHEST SEASONAL GROUNDWATER, BEDROCK AND IMPERVIOUS LAYER
Very Small	250 Sq. Ft.	2 Feet
Small	300-400 Sq. Ft.	2 Feet
Medium	500-600 Sq. Ft.	2 Feet
Medium Large	700-900 Sq. Ft.	2.5 Feet
Large	1200-1600 Sq. Ft.	3.5 Feet
Extra Large	Not Permitted	———

EXAMPLE: A 4 bedroom single family dwelling located on a site requiring a medium size system (Table 9-1) requires a sewage disposal bed of 500 to 600 square feet.

sec. 9.7c SEPARATED SYSTEM

Human waste handled by methods permitted in sec. 93 This system to handle gray waste water only.

The minimum area in square feet of approved shallow absorption bed for 1 to 5 bedroom single family dwellings for each system size rating shall be as follows:

SYSTEM SIZE RATING	RANGE OF BED SIZES REQUIRED IN SQUARE FEET	MINIMUM DISTANCE BELOW THE BOTTOM OF BEDS OR TRENCHES TO HIGHEST SEASONAL GROUNDWATER, BEDROCK AND IMPERVIOUS LAYER
Very Small	165 Sq. Ft.	2 Feet
Small	195-260 Sq. Ft.	2 Feet
Medium	325-390 Sq. Ft.	2 Feet
Medium Large	455-585 Sq. Ft.	2.5 Feet
Large	780-1040 Sq. Ft.	3.5 Feet
Extra Large	Not Permitted	———

EXAMPLE: A 4 bedroom single family dwelling using a vault privy located on a site requiring a medium size system (Table 9-1) requires a sewage disposal bed of 325 to 390 square feet to take care of the gray water.

sec. 97d SERVING OTHER FACILITIES

SYSTEM SIZE RATING	RANGE OF SQUARE FEET OF BED FOR DOMESTIC WASTE ONLY	MINIMUM DISTANCE BELOW THE BOTTOM OF BEDS OR TRENCHES TO HIGHEST SEASONAL GROUNDWATER, BEDROCK, AND IMPERVIOUS LAYER
Very Small	0.83 sq. ft./gpd	
Small	1.0-1.33 sq. ft./gpd	2 Feet
Medium	1.67-2.00 sq. ft./gpd	2 Feet
Medium Large	2.33-3.00 sq. ft./gpd	2.5 Feet
Large	4.00-5.33 sq. ft./gpd	3.5 Feet
Extra Large	Not Permitted	———

When the waste is of a quality different from normal domestic waste, the values in the adjoining table shall be multiplied by the following factor $\sqrt[3]{\frac{BOD_5+SS}{240}}$

This factor shall not be used if its value is less than one.

CHAMBERS Sec.9.8

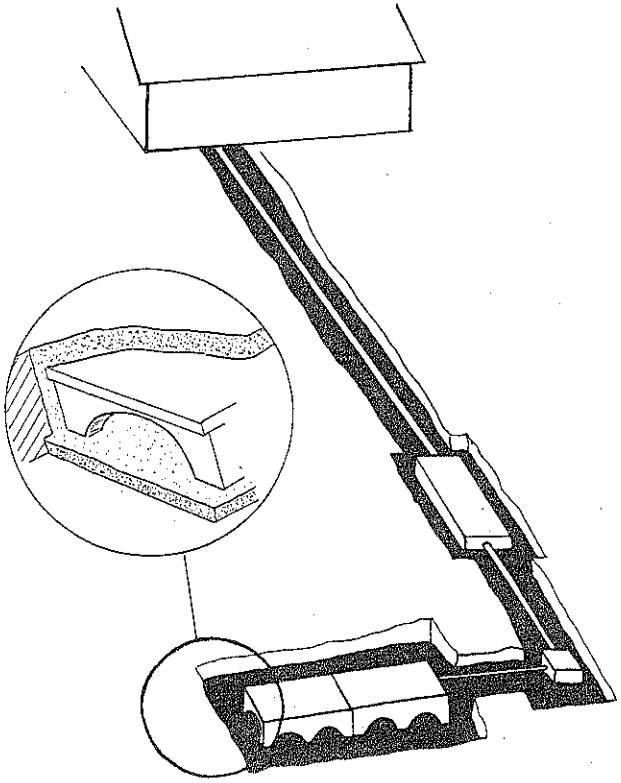

CROSS SECTION

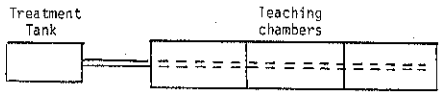

SINGLE FILE ARRANGEMENT

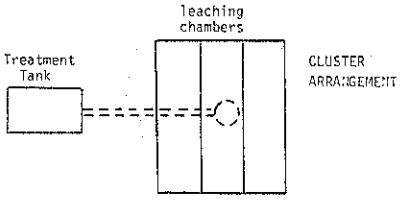

CLUSTER ARRANGEMENT

Plan View

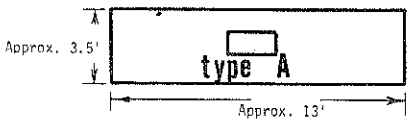

Plan View

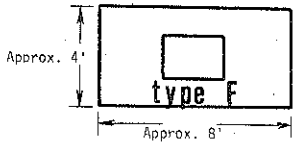

sec.9.8a

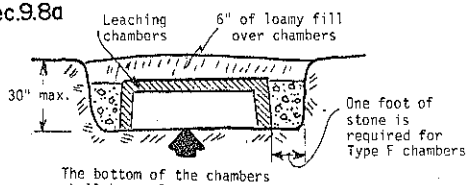

The bottom of the chambers shall be at 2 to 3.5 feet above the seasonal high groundwater, bedrock, and impervious layer. Refer to tables below for exact minimum dimensions.

SINGLE FAMILY DWELLINGS

sec.9.8b COMBINED SYSTEMS

All waste water: human waste & gray waste water

Number of leaching chambers required for 1 to 5 bedroom single family dwelling for each system size rating.

System Size Rating	Arrangement of chamber permitted		Leaching chambers required		Minimum distance below the bottom of the chambers to highest seasonal groundwater, bedrock and impervious layer
	Single file	Cluster	Type A (45) (sq.ft.)	Type F (32) (sq.ft.)	
Very Small	Yes	Yes	4	5	2 Feet
Small	Yes	Yes	5	6	2 Feet
Medium	Yes	Yes	8	10	2 Feet
Medium Large	Yes	No	11	15	2.5 Feet
Large	Not Permitted		____	____	____
Extra Large	Not Permitted		____	____	____

Example: A 3 bedroom dwelling located on a soil requiring a medium size system (Table 9-1) requires 8 of Type A leaching chambers or 10 of Type F leaching chambers.

sec.9.8c SEPARATED SYSTEM

Human waste handled by methods permitted in sec. 9.3 This system to handle gray waste water only.

Number of leaching chambers required for 1 to 5 bedroom single family dwelling for each system size rating.

System Size Rating	Arrangement of chamber permitted		Leaching chambers required		Minimum distance below the bottom of the chambers to highest seasonal groundwater, bedrock and impervious layer
	Single file	Cluster	Type A (45) (sq.ft.)	Type F (32) (sq.ft.)	
Very Small	Yes	Yes	2	3	2 Feet
Small	Yes	Yes	3	4	2 Feet
Medium	Yes	Yes	6	7	2 Feet
Medium Large	Yes	No	8	10	2.5 Feet
Large	Not Permitted		____	____	____
Extra Large	Not Permitted		____	____	____

Example: A 3 bedroom dwelling using a vault privy located on a soil requiring a medium size system (Table 9-1) requires 6 of Type A leaching chambers or 7 of Type F leaching chambers.

sec.9.8d SERVING OTHER FACILITIES

Not permitted without review and written approval by the department.

Proposals to install leaching chambers to serve facilities other than single family dwellings shall be first reviewed by the Department. Designers of such proposals should contact the Department for guidelines before submitting proposals. LPI's shall not permit leaching chamber installations to serve other facilities without written approval of the Department.

MOUNDS Sec.9.9

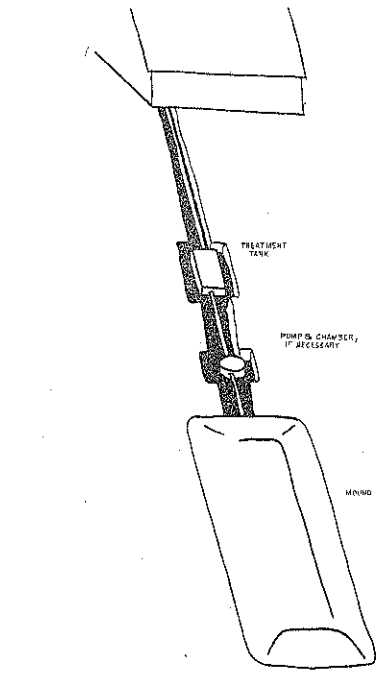

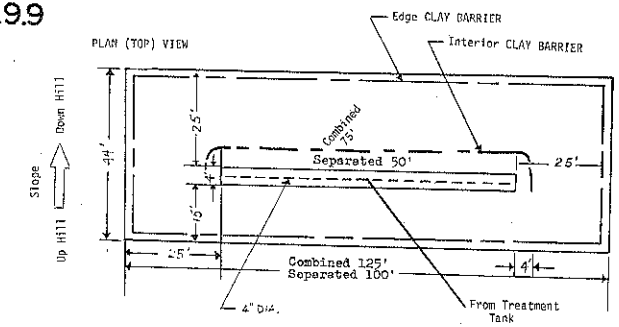

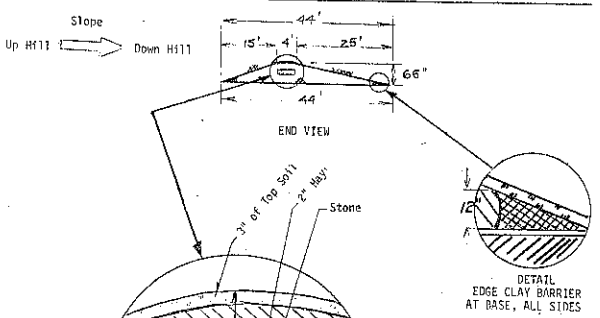

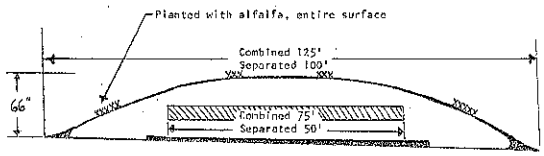

SINGLE FAMILY DWELLINGS

For System Size Ratings Large and Extra Large

sec.9.9a COMBINED SYSTEMS

All waste water: human waste & gray waste water

The size mound and bed within the mound required to serve 1 to 5 bedroom single family dwellings shall be: mound - 125 feet by 44 feet at the base, and bed - 75 feet by 4 feet.

sec.9.9b SEPARATED SYSTEM

Human waste handled by methods permitted in sec. 9.3 This system to handle gray waste water only.

The size mound and bed within the mound required to serve 1 to 5 bedroom single family dwellings shall be: mound - 100 feet by 44 feet at the base, and bed - 50 feet by 4 feet.

sec.9.9c SERVING OTHER FACILITIES

Not permitted