Application for
Site Location of Development Permit
(Volume II)

DCP Searsport, LLC
Searsport, Maine

Prepared for:

DCP Midstream Partners, LP
Denver, Colorado

Submitted to:

Maine Department of Environmental Protection
Bangor, Maine

Prepared by:

TRC Environmental Corporation
400 Southborough Drive
South Portland, Maine

May 2011

(As Revised June 2011)

APPENDIX 1A

Pre- and Post-Development Site Plans

PREDEVELOPMENT SITE PLAN
SEARSPORT, MAINE

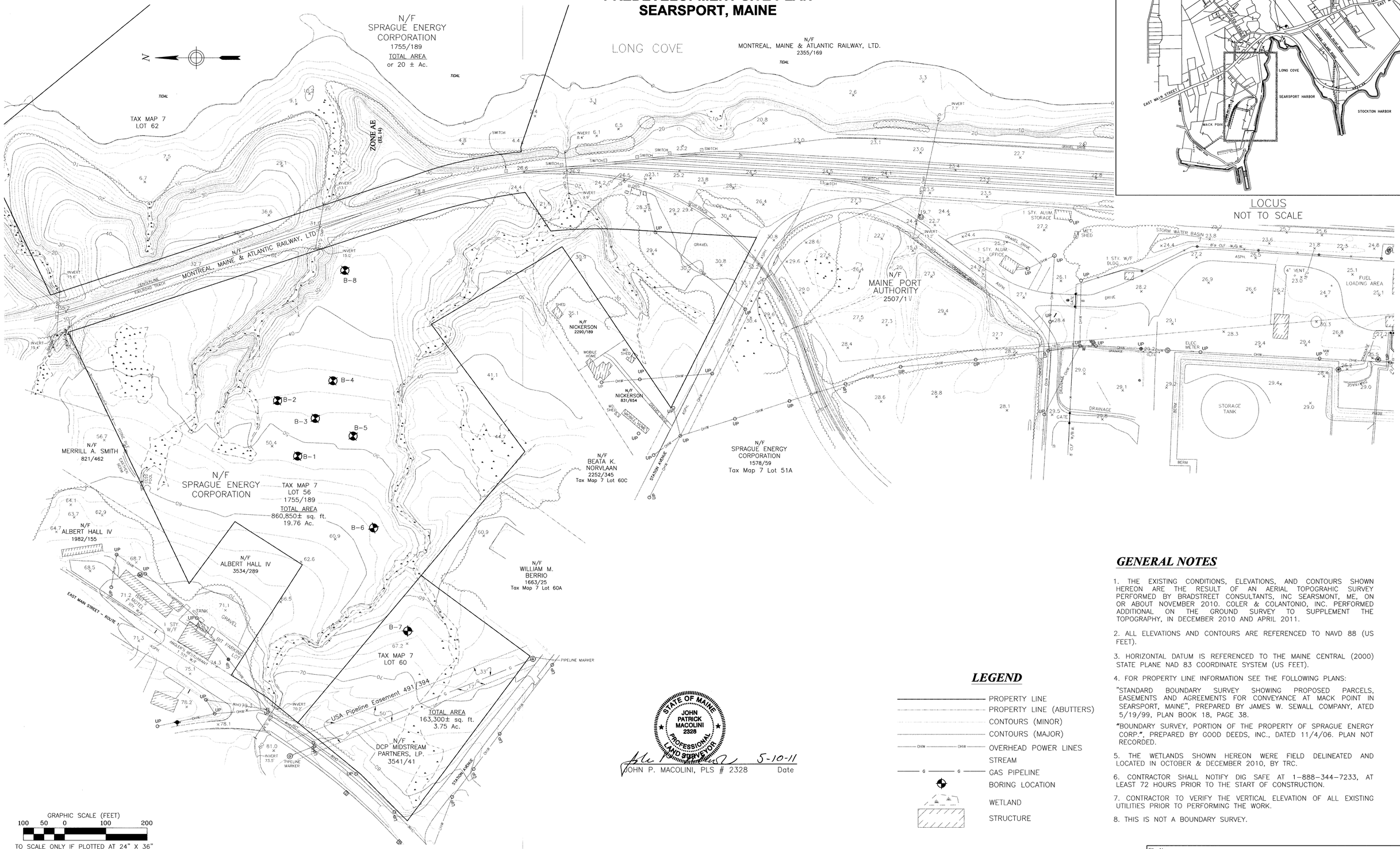

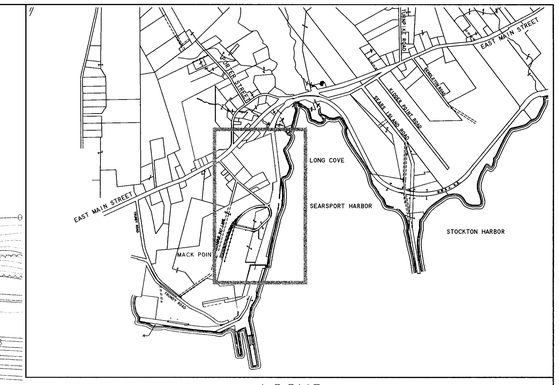

LOCUS
NOT TO SCALE

STATE OF MAINE
JOHN PATRICK MACOLINI
2328
PROFESSIONAL LAND SURVEYOR

5-10-11

JOHN P. MACOLINI, PLS # 2328 — Date

GENERAL NOTES

1. THE EXISTING CONDITIONS, ELEVATIONS, AND CONTOURS SHOWN HEREON ARE THE RESULT OF AN AERIAL TOPOGRAHIC SURVEY PERFORMED BY BRADSTREET CONSULTANTS, INC SEARSMONT, ME, ON OR ABOUT NOVEMBER 2010. COLER & COLANTONIO, INC. PERFORMED ADDITIONAL ON THE GROUND SURVEY TO SUPPLEMENT THE TOPOGRAPHY, IN DECEMBER 2010 AND APRIL 2011.

2. ALL ELEVATIONS AND CONTOURS ARE REFERENCED TO NAVD 88 (US FEET).

3. HORIZONTAL DATUM IS REFERENCED TO THE MAINE CENTRAL (2000) STATE PLANE NAD 83 COORDINATE SYSTEM (US FEET).

4. FOR PROPERTY LINE INFORMATION SEE THE FOLLOWING PLANS:

"STANDARD BOUNDARY SURVEY SHOWING PROPOSED PARCELS, EASEMENTS AND AGREEMENTS FOR CONVEYANCE AT MACK POINT IN SEARSPORT, MAINE", PREPARED BY JAMES W. SEWALL COMPANY, ATED 5/19/99, PLAN BOOK 18, PAGE 38.

"BOUNDARY SURVEY, PORTION OF THE PROPERTY OF SPRAGUE ENERGY CORP.", PREPARED BY GOOD DEEDS, INC., DATED 11/4/06. PLAN NOT RECORDED.

5. THE WETLANDS SHOWN HEREON WERE FIELD DELINEATED AND LOCATED IN OCTOBER & DECEMBER 2010, BY TRC.

6. CONTRACTOR SHALL NOTIFY DIG SAFE AT 1-888-344-7233, AT LEAST 72 HOURS PRIOR TO THE START OF CONSTRUCTION.

7. CONTRACTOR TO VERIFY THE VERTICAL ELEVATION OF ALL EXISTING UTILITIES PRIOR TO PERFORMING THE WORK.

8. THIS IS NOT A BOUNDARY SURVEY.

LEGEND

- PROPERTY LINE
- PROPERTY LINE (ABUTTERS)
- CONTOURS (MINOR)
- CONTOURS (MAJOR)
- OHW — OHW — OVERHEAD POWER LINES
- STREAM
- G — G — GAS PIPELINE
- BORING LOCATION
- WETLAND
- STRUCTURE

DRAWING NO.	TITLE	No.	DATE	DESCRIPTION	REV	DSN	CK

COLER & COLANTONIO INC
1986 - 2011
ENGINEERS AND SCIENTISTS

DRAWN	SDH	DATE	
CHECKED	NRC	DATE	
SCALE: AS NOTED			
PROJ. NO.			

File No.:

PRE-DEVELOPMENT SITE PLAN
DCP MIDSTREAM PARTNERS, LP
DCP SEARSPORT PROPANE TERMINAL
SEARSPORT, MAINE

APPROVED BY
COLER & COLANTONIO, INC.
DATE: MAY, 2011

SHEET 1 OF 1

DCP SEARSPORT

File: DCP-Searsport.dwg May 10, 2011 - 04:29pm

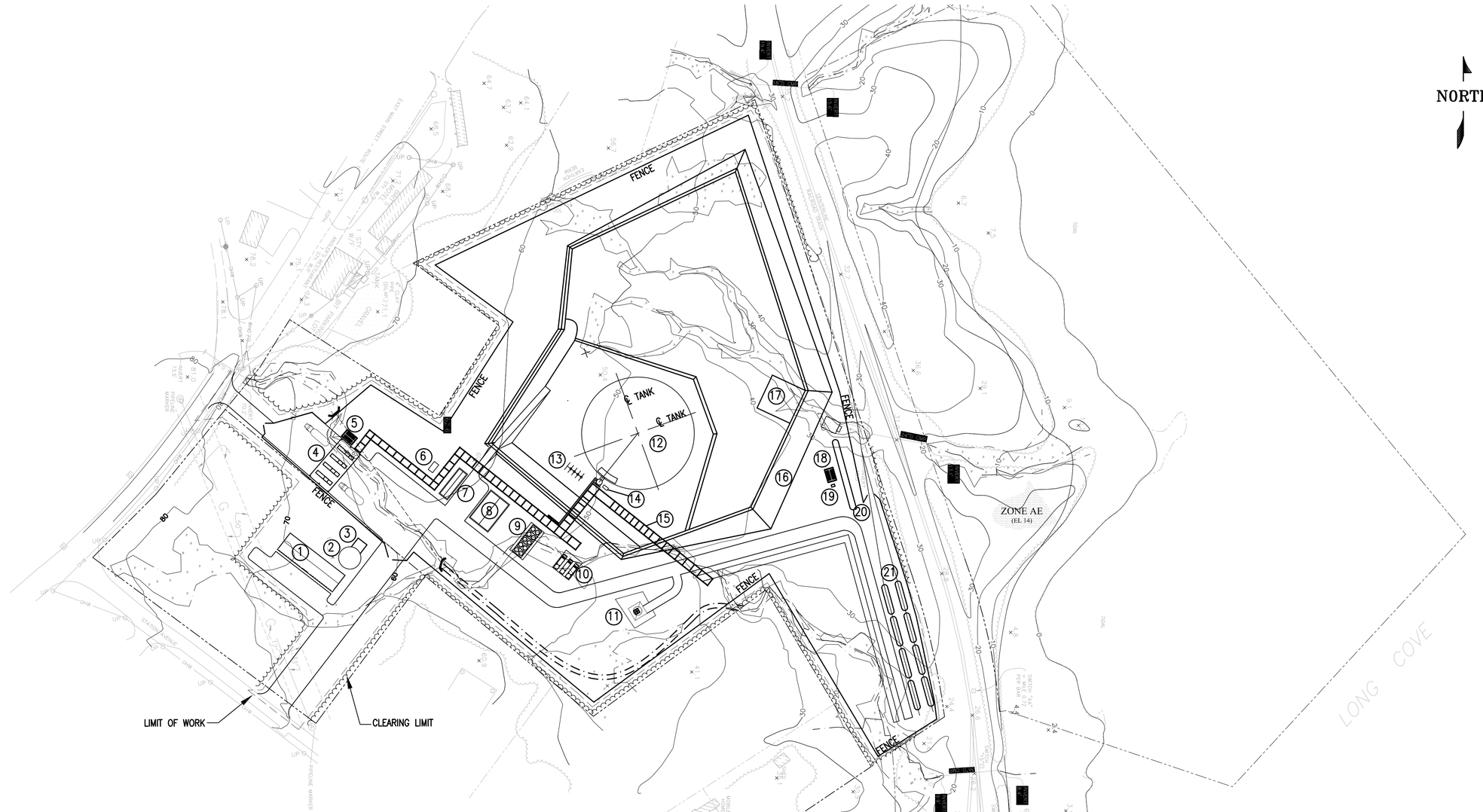

LEGEND:

1. ADMINISTRATION BUILDING
2. FIRE WATER TANK
3. FIRE WATER PUMP
4. TRUCK LOADING STATIONS (3 STATIONS INSTALLED–1 FUTURE)
5. ODORANT SKID
6. TRANSFORMER
7. MCC BUILDING
8. COMPRESSOR BUILDING
9. AIR FIN/FAN EXCHANGER/RECONDENSER
10. LPG PRODUCT HEATER
11. EMERGENCY FLARE
12. BULK LPG FUEL STORAGE TANK
13. LPG PRODUCT PUMPS
14. COLD BLOWER
15. PIPE RACK
16. CONTAINMENT DIKE
17. SUB IMPOUNDMENT
18. ODORANT SKID
19. LPG TRANSFER COMPRESSOR
20. LPG FUEL STORAGE TANK
21. FUTURE RAILCAR LOADING STATIONS

– – – – – – LIMIT OF WORK
CLEARING LIMIT

100 50 0 100 200 300
SCALE IN FEET

ISSUED FOR PERMITTING
NOT FOR CONSTRUCTION

THIS DRAWING AND THE INFORMATION CONTAINED THEREON IS CONFIDENTIAL. IT IS THE PROPERTY OF MATRIX SERVICE AND SHALL BE USED ONLY FOR THE PURPOSE INTENDED. IT SHALL NOT BE COPIED IN WHOLE OR IN PART, PARTS SHALL NOT BE FABRICATED FROM THE DRAWING OR THE INFORMATION DIVULGED WITHOUT MATRIX'S WRITTEN PERMISSION.

REV.	DATE	REVISION DESCRIPTION	BY	APVD.
G	08JUN11	GENERAL SITE REVISIONS – ISSUED FOR PERMITTING	JRT	RPI
F	25MAY11	IMPOUNDMENT REVISED – ISSUED FOR PERMITTING	JRT	RPI
E	27APR11	ISSUED FOR PERMITTING – NOT FOR CONSTRUCTION	JRT	RPI
D	20APR11	TANK AND EQUIPMENT REVISED FOR NEW SITE LAYOUT	JRT	RPI
C	11APR11	SITE UPDATED	JRT	MRM
B	23MAR11	REVISED SITE LAYOUT	SEG	MRM

SEAL

STATE OF MAINE
KENNETH J. ERDMANN
9656
REGISTERED PROFESSIONAL ENGINEER

MATRIX SERVICE
INDUSTRIAL SERVICE CONTRACTOR

CUSTOMER: DCP MIDSTREAM
LPG STORAGE FACILITY SEARSPORT, MAINE

TITLE: POST – DEVELOPMENT SITE PLAN

DRAWN BY:	SEG	13JUL10
CHECKED BY:	MRM	14JUL10
APPROV'D. BY:		
OFFICE	PITTSBURGH	CONTRACT 4410–8173
DWG. NO.	2001–01	SHEET 01 OF SHEET REV. G

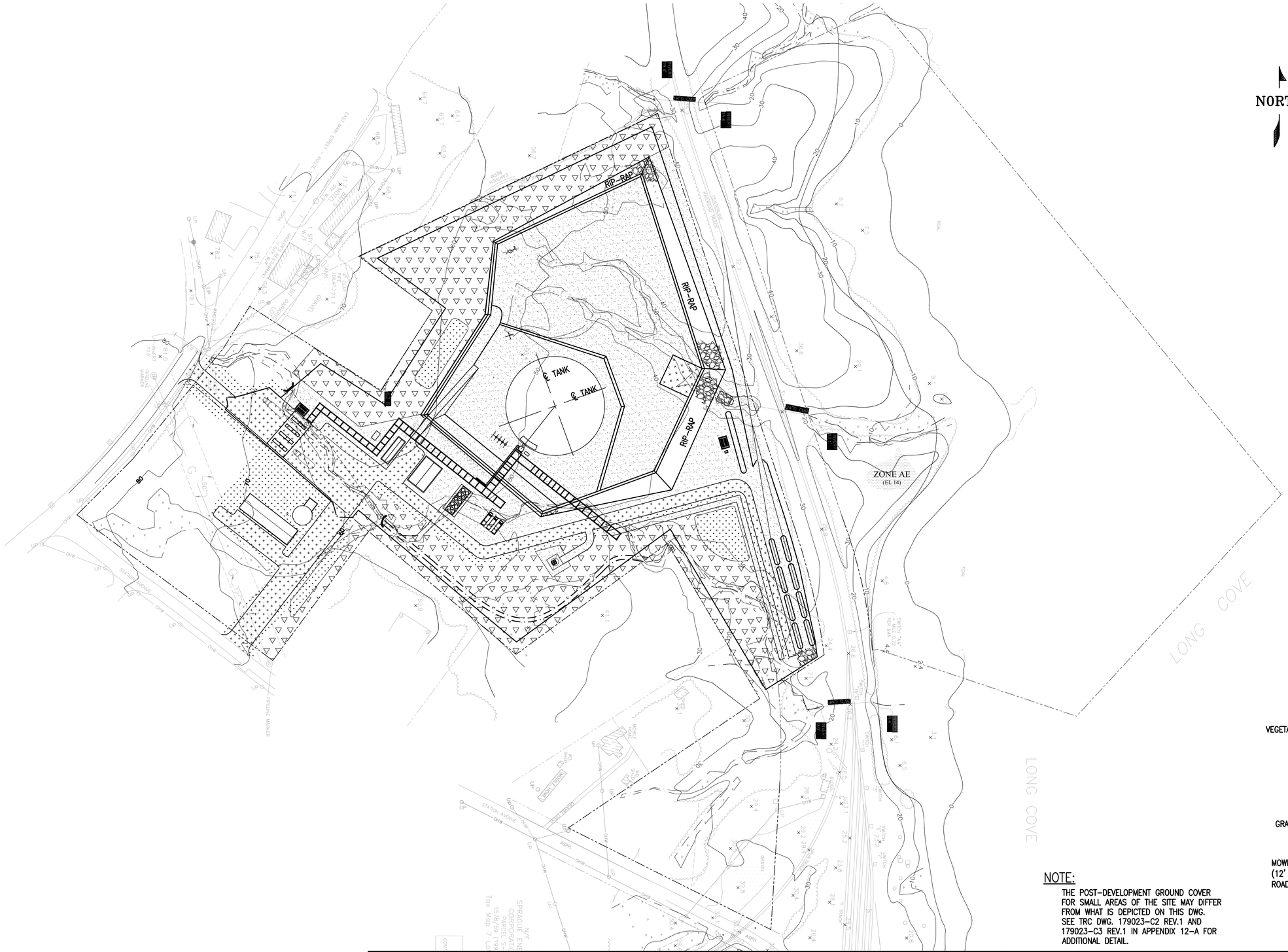

NOTE:

THE POST-DEVELOPMENT GROUND COVER FOR SMALL AREAS OF THE SITE MAY DIFFER FROM WHAT IS DEPICTED ON THIS DWG. SEE TRC DWG. 179023-C2 REV.1 AND 179023-C3 REV.1 IN APPENDIX 12-A FOR ADDITIONAL DETAIL.

LEGEND:

- VEGETATED AREA
- PAVEMENT
- GRAVEL/STONE
- MOWED GRASS (12' WIDE ALONG ROADWAY)

ISSUED FOR PERMITTING
NOT FOR CONSTRUCTION

100 50 0 100 200 300

SCALE IN FEET

THIS DRAWING AND THE INFORMATION CONTAINED THEREON IS CONFIDENTIAL. IT IS THE PROPERTY OF MATRIX SERVICE AND SHALL BE USED ONLY FOR THE PURPOSE INTENDED. IT SHALL NOT BE COPIED IN WHOLE OR IN PART, PARTS SHALL NOT BE FABRICATED FROM THE DRAWING OR THE INFORMATION DIVULGED WITHOUT MATRIX'S WRITTEN PERMISSION.

REV.	DATE	REVISION DESCRIPTION	BY	APVD.
B	08JUN11	GROUND COVER REVISED TO MATCH SITE REVISIONS	JRT	RPI

SEA

STATE OF MAINE
KENNETH J. ERDMANN
6656
REGISTERED PROFESSIONAL ENGINEER

MATRIX SERVICE
INDUSTRIAL SERVICE CONTRACTOR

DRAWN BY:	JRT	02MAY11
CHECKED BY:	MRM	02MAY11
APPROV'D. BY:		
OFFICE	PITTSBURGH	
CONTRACT	4410-8173	
DWG. NO.	2002-01	SHEET 01 OF SHEET
REV.	B	

CUSTOMER: DCP MIDSTREAM
LPG STORAGE FACILITY SEARSPORT, MAINE

TITLE: SITE PLAN
POST DEVELOPMENT GROUND COVER

NOTES:

1.) SEE DWG. 2004–01 FOR SECTIONS A–A THRU D–D.
2.) SEE DWG. 2004–02 FOR SECTIONS E–E, F–F & G–G.

ISSUED FOR PERMITTING
NOT FOR CONSTRUCTION

100 50 0 100 200 300

SCALE IN FEET

THIS DRAWING AND THE INFORMATION CONTAINED THEREON IS CONFIDENTIAL. IT IS THE PROPERTY OF MATRIX SERVICE AND SHALL BE USED ONLY FOR THE PURPOSE INTENDED. IT SHALL NOT BE COPIED IN WHOLE OR IN PART, PARTS SHALL NOT BE FABRICATED FROM THE DRAWING OR THE INFORMATION DIVULGED WITHOUT MATRIX'S WRITTEN PERMISSION.

REV.	DATE	REVISION DESCRIPTION	BY	APVD.
G	08JUN11	REVISED CONTOUR LINES	SEG	RPI
F	03JUN11	REVISED GRADING, DELETED SECTION D–D	SEG	RPI
E	24MAY11	SITE PLAN REVISED, ADDED SECTIONS AND NOTE 2	SEG	RPI
D	28APR11	SITE PLAN UPDATED	JRT	RPI
C	25APR11	ADDED SECTIONS AND NOTES	JRT	RPI
B	20APR11	SITE PLAN REVISED	JRT	RPI

SCALE NTS

MATRIX SERVICE
INDUSTRIAL SERVICE CONTRACTOR

CUSTOMER: DCP MIDSTREAM
LPG STORAGE FACILITY SEARSPORT, MAINE

TITLE: POST – DEVELOPMENT SITE PLAN
NEW CONTOUR DEVELOPMENT

DRAWN BY:	JRT	14JUL10
CHECKED BY:	MRM	14JUL10
APPROV'D. BY:		
OFFICE	PITTSBURGH	
CONTRACT	4410–8173	
DWG. NO.	2003–01	
SHEET OF SHEET	01	
REV.	G	

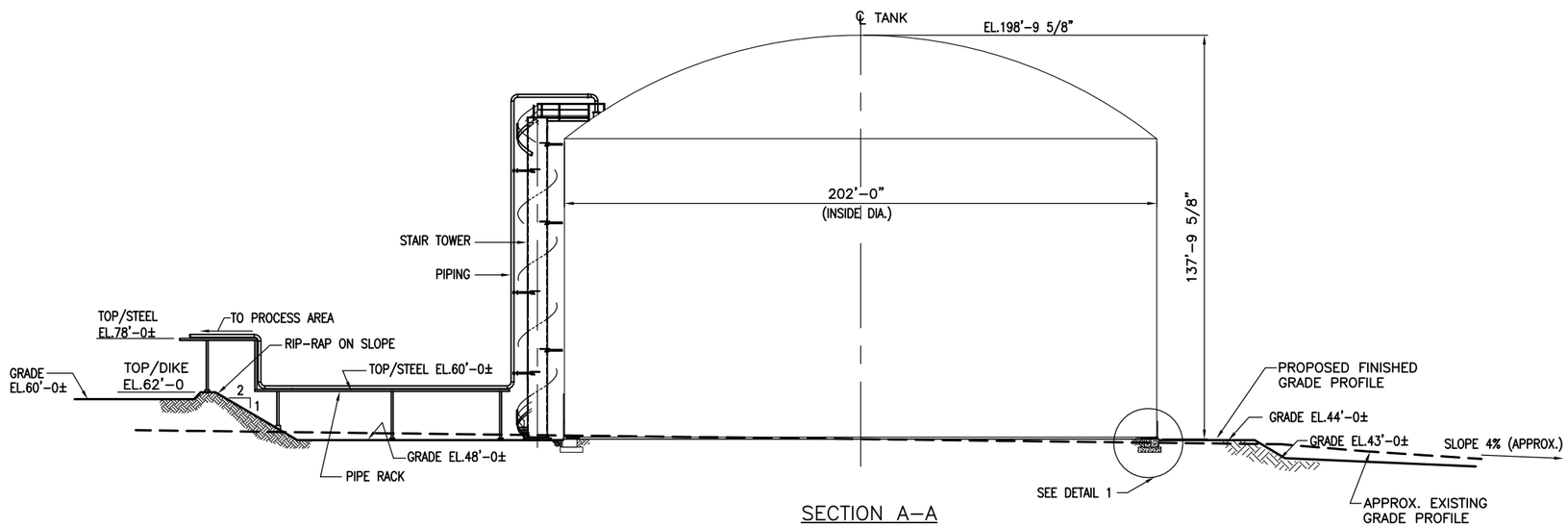

SECTION A–A

(FROM DWG. 2003–01)

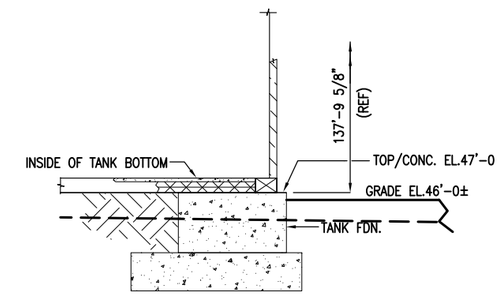

DETAIL 1

(FROM DWG. 2004–01)

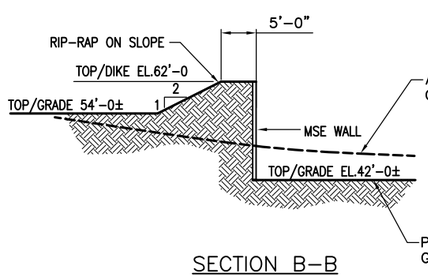

SECTION B–B

(FROM DWG. 2003–01)

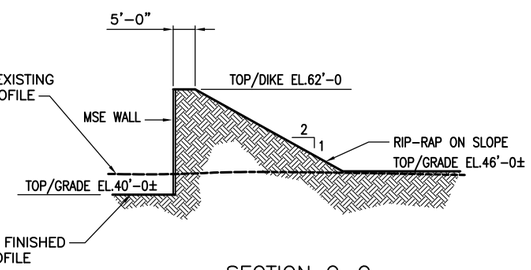

SECTION C–C

(FROM DWG. 2003–01)

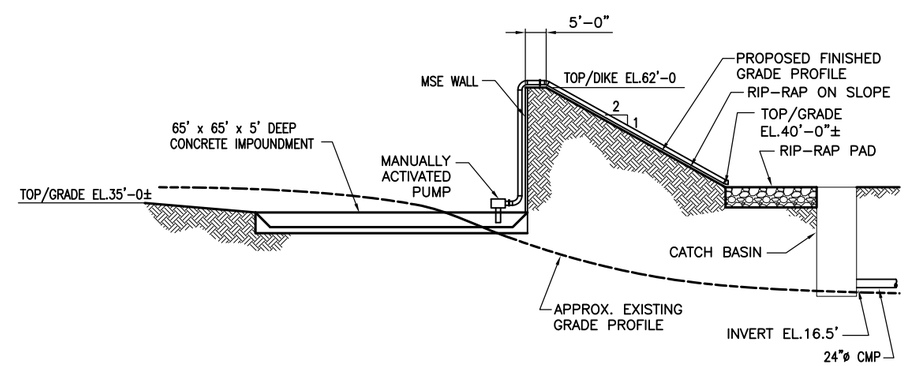

SECTION D–D

(FROM DWG. 2003–01)

ISSUED FOR PERMITTING
NOT FOR CONSTRUCTION

THIS DRAWING AND THE INFORMATION CONTAINED THEREON IS CONFIDENTIAL. IT IS THE PROPERTY OF MATRIX SERVICE AND SHALL BE USED ONLY FOR THE PURPOSE INTENDED. IT SHALL NOT BE COPIED IN WHOLE OR IN PART, PARTS SHALL NOT BE FABRICATED FROM THE DRAWING OR THE INFORMATION DIVULGED WITHOUT MATRIX'S WRITTEN PERMISSION.

REV.	DATE	REVISION DESCRIPTION	BY	APVD.	SEAL
D	08JUN11	REVISED SECTIONS	SEG	RPI	
C	01JUN11	REVISED ELEVATIONS, ADDED EXISTING GRADE	SEG	RPI	
B	28APR11	REVISED SECTIONS	JRT	RPI	SCALE

MATRIX SERVICE
INDUSTRIAL SERVICE CONTRACTOR

CUSTOMER: DCP MIDSTREAM
LPG STORAGE FACILITY SEARSPORT, MAINE

TITLE: LPG TANK AREA
GRADING SECTIONS AND DETAILS

DRAWN BY:	JRT	25APR11
CHECKED BY:	RPI	25APR11
APPROV'D. BY:		
OFFICE: PITTSBURGH	CONTRACT: 4410–8173	
DWG. NO. 2004–01	SHEET 02 OF SHEET	REV. D

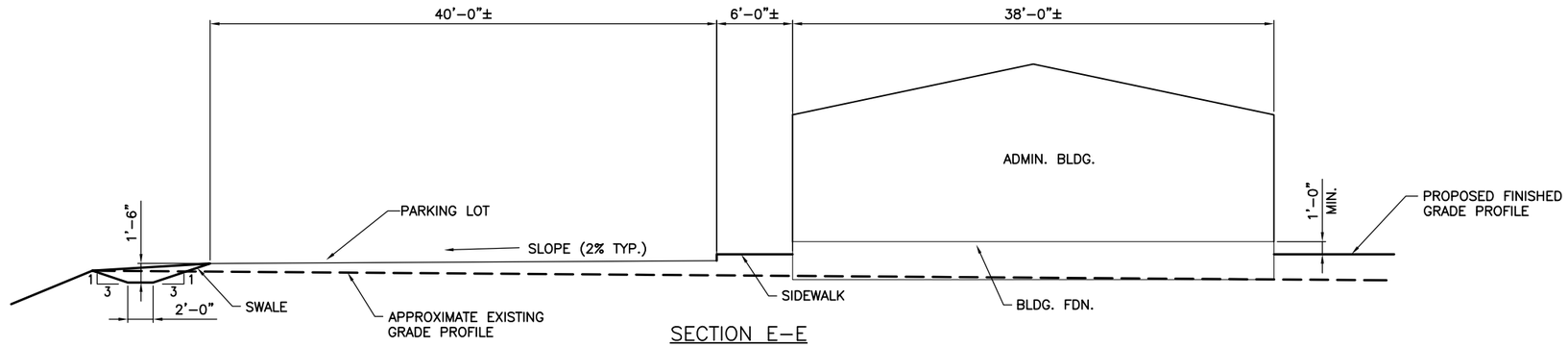

SECTION E-E

(TYPICAL SECTION AT ADMIN. BLDG.)

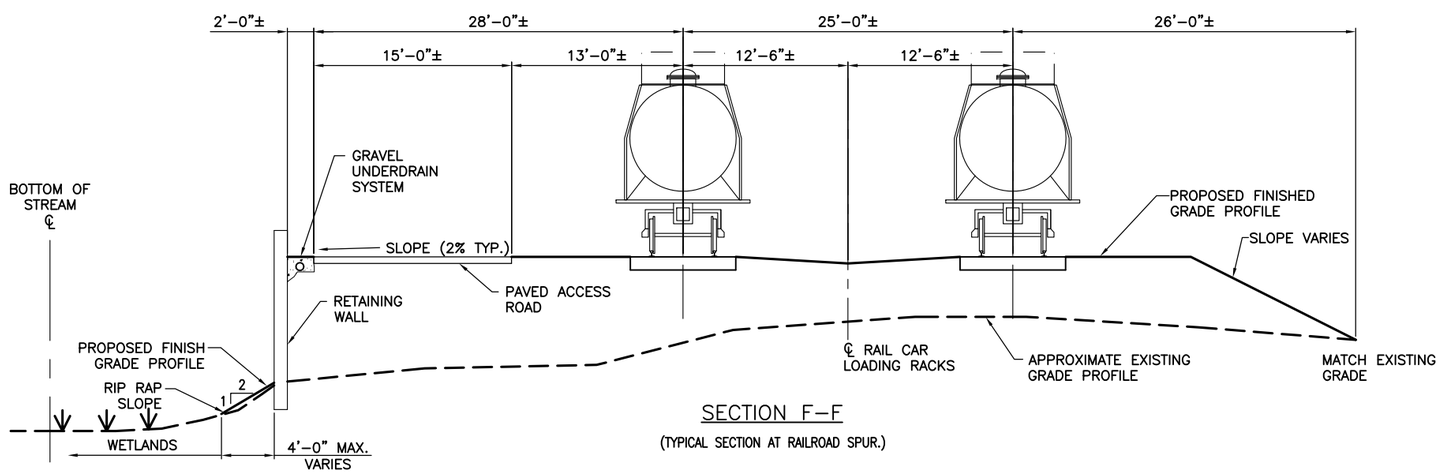

SECTION F-F

(TYPICAL SECTION AT RAILROAD SPUR.)

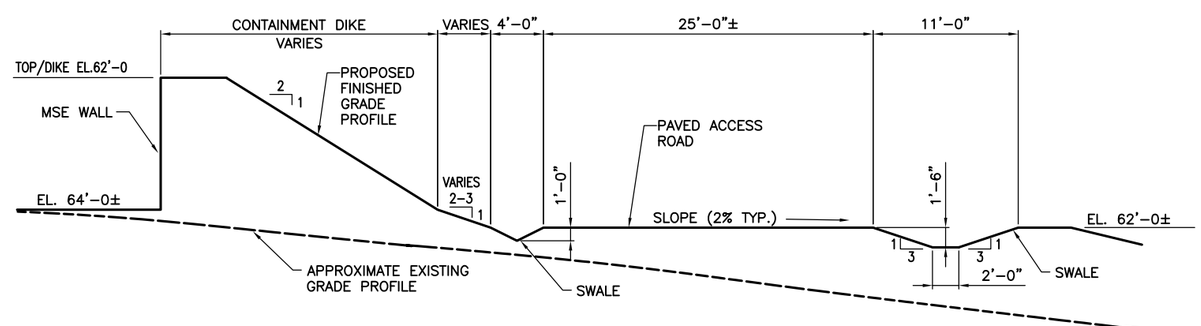

SECTION G-G

ISSUED FOR PERMITTING
NOT FOR CONSTRUCTION

THIS DRAWING AND THE INFORMATION CONTAINED THEREON IS CONFIDENTIAL. IT IS THE PROPERTY OF MATRIX SERVICE AND SHALL BE USED ONLY FOR THE PURPOSE INTENDED. IT SHALL NOT BE COPIED IN WHOLE OR IN PART, PARTS SHALL NOT BE FABRICATED FROM THE DRAWING OR THE INFORMATION DIVULGED WITHOUT MATRIX'S WRITTEN PERMISSION.

REV.	DATE	REVISION DESCRIPTION	BY	APVD.
C	08JUN11	REVISED SECTIONS	SEG	RPI
B	01JUN11	REVISED SECTIONS	SEG	RPI

SEAL

SCALE

MATRIX SERVICE
INDUSTRIAL SERVICE CONTRACTOR

CUSTOMER: DCP MIDSTREAM
LPG STORAGE FACILITY SEARSPORT, MAINE

TITLE: LPG TANK AREA
GRADING SECTIONS AND DETAILS

DRAWN BY:	SEG	02JUN11
CHECKED BY:	RPI	02JUN11
APPROV'D. BY:		
OFFICE: PITTSBURGH	CONTRACT: 4410-8173	
DWG. NO. 2004-02	SHEET 02 OF SHEET	REV. C

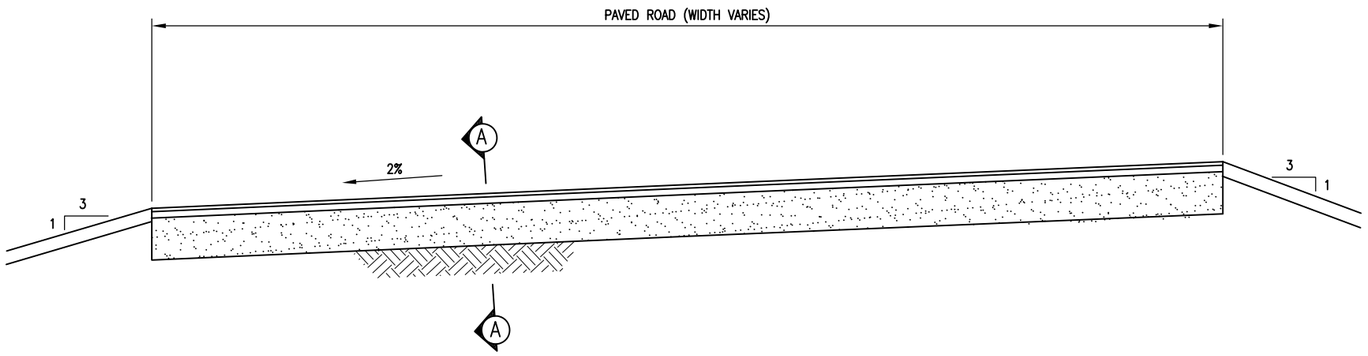

SECTION THRU TYPICAL PAVED ROADWAY

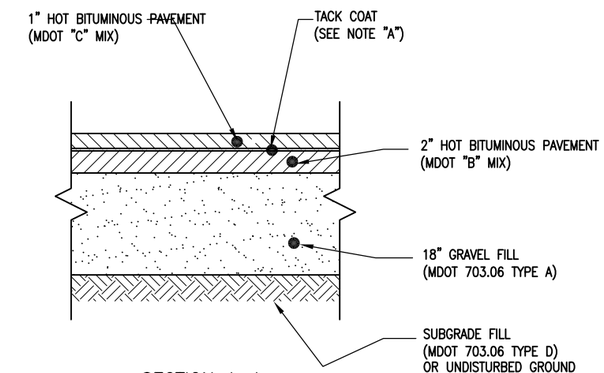

SECTION A–A

NOTE "A"
ELIMINATE TACK COAT IF WEARING COURSE IS INSTALLED WITHIN 72 HOURS OF BINDER COURSE.

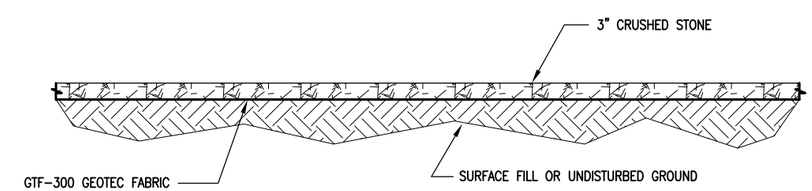

SECTION THRU GRAVEL COVERED AREA

(TYPICAL SURFACE AROUND TANK AND EQUIPMENT AREAS)

NOTES:

1.) WORK THIS DWG. WITH DWG. 2003–01 AND GROUND COVERAGE DWG. 2002–01.

ISSUED FOR PERMITTING
NOT FOR CONSTRUCTION

THIS DRAWING AND THE INFORMATION CONTAINED THEREON IS CONFIDENTIAL. IT IS THE PROPERTY OF MATRIX SERVICE AND SHALL BE USED ONLY FOR THE PURPOSE INTENDED. IT SHALL NOT BE COPIED IN WHOLE OR IN PART, PARTS SHALL NOT BE FABRICATED FROM THE DRAWING OR THE INFORMATION DIVULGED WITHOUT MATRIX'S WRITTEN PERMISSION.

REV.	DATE	REVISION DESCRIPTION	BY	APVD.
B	08JUN11	REVISED PAVED ROAD SECTION	JRT	RPI

SCALE NTS

MATRIX SERVICE
INDUSTRIAL SERVICE CONTRACTOR

CUSTOMER: DCP MIDSTREAM
LPG STORAGE FACILITY SEARSPORT, MAINE

TITLE: ROADWAYS
SECTIONS AND DETAILS

DRAWN BY:	JRT	28APR11
CHECKED BY:	RPI	28APR11
APPROV'D. BY:		
OFFICE: PITTSBURGH	CONTRACT: 4410–8173	
DWG. NO. 2005–01	SHEET 01 OF SHEET	REV. B

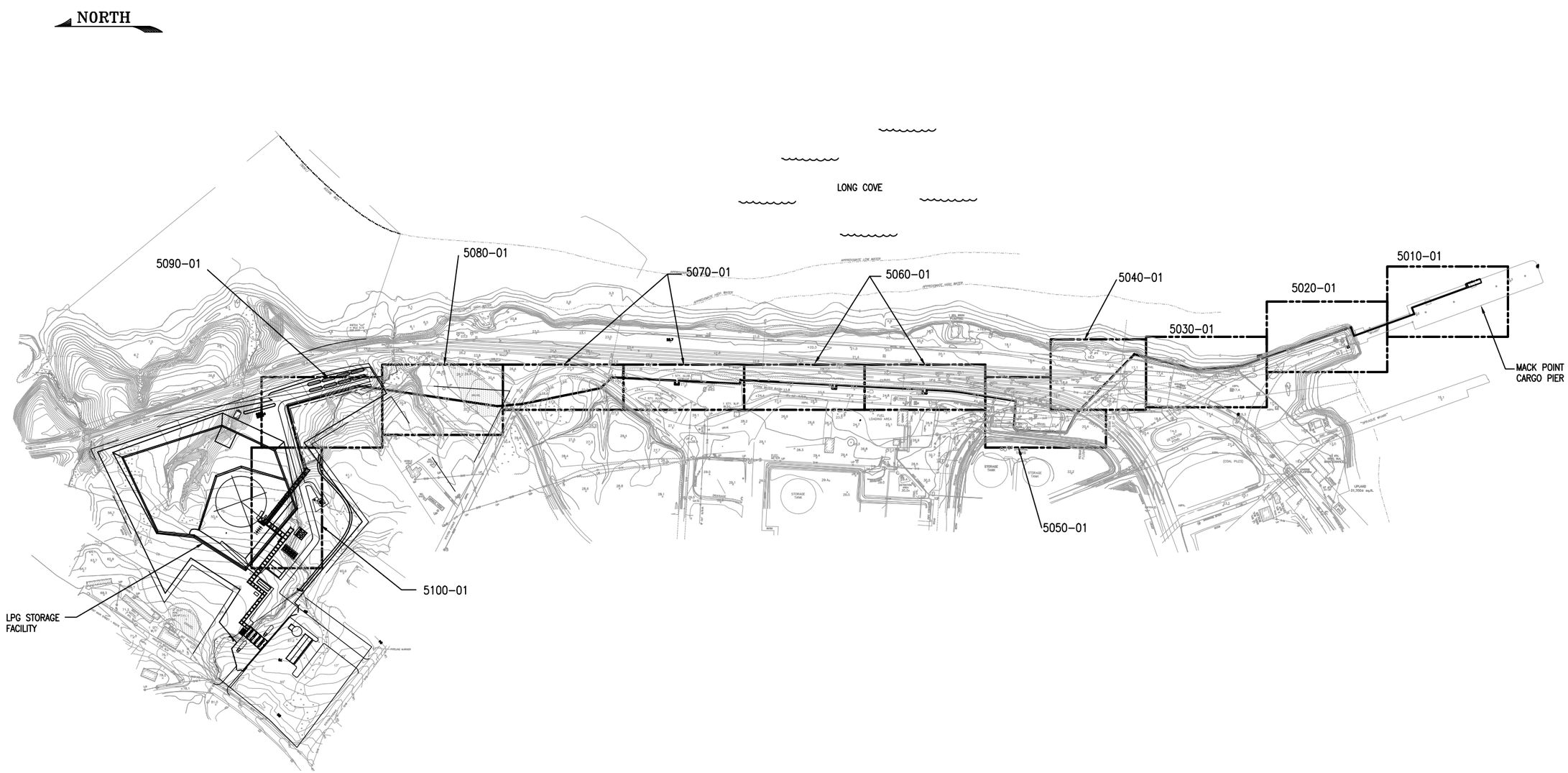

ISSUED FOR PERMITTING
NOT FOR CONSTRUCTION

100 50 0 100 200 300
SCALE IN FEET

THIS DRAWING AND THE INFORMATION CONTAINED THEREON IS CONFIDENTIAL. IT IS THE PROPERTY OF MATRIX SERVICE AND SHALL BE USED ONLY FOR THE PURPOSE INTENDED. IT SHALL NOT BE COPIED IN WHOLE OR IN PART, PARTS SHALL NOT BE FABRICATED FROM THE DRAWING OR THE INFORMATION DIVULGED WITHOUT MATRIX'S WRITTEN PERMISSION.

REV.	DATE	REVISION DESCRIPTION	BY	APVD.	SEAL
B	8JUN11	REVISED DIKE	DJK	DCM	SCALE AS SHOWN

MATRIX SERVICE
INDUSTRIAL SERVICE CONTRACTOR

CUSTOMER: DCP MIDSTREAM
LPG STORAGE FACILITY SEARSPORT, MAINE

TITLE: PIPING KEY PLAN

DRAWN BY:	DJK	16MAR11
CHECKED BY:	DCM	16MAR11
APPROV'D. BY:		
OFFICE: PITTSBURGH	CONTRACT: 4410-8173	
DWG. NO. 5001-01	SHEET OF 01	REV. B

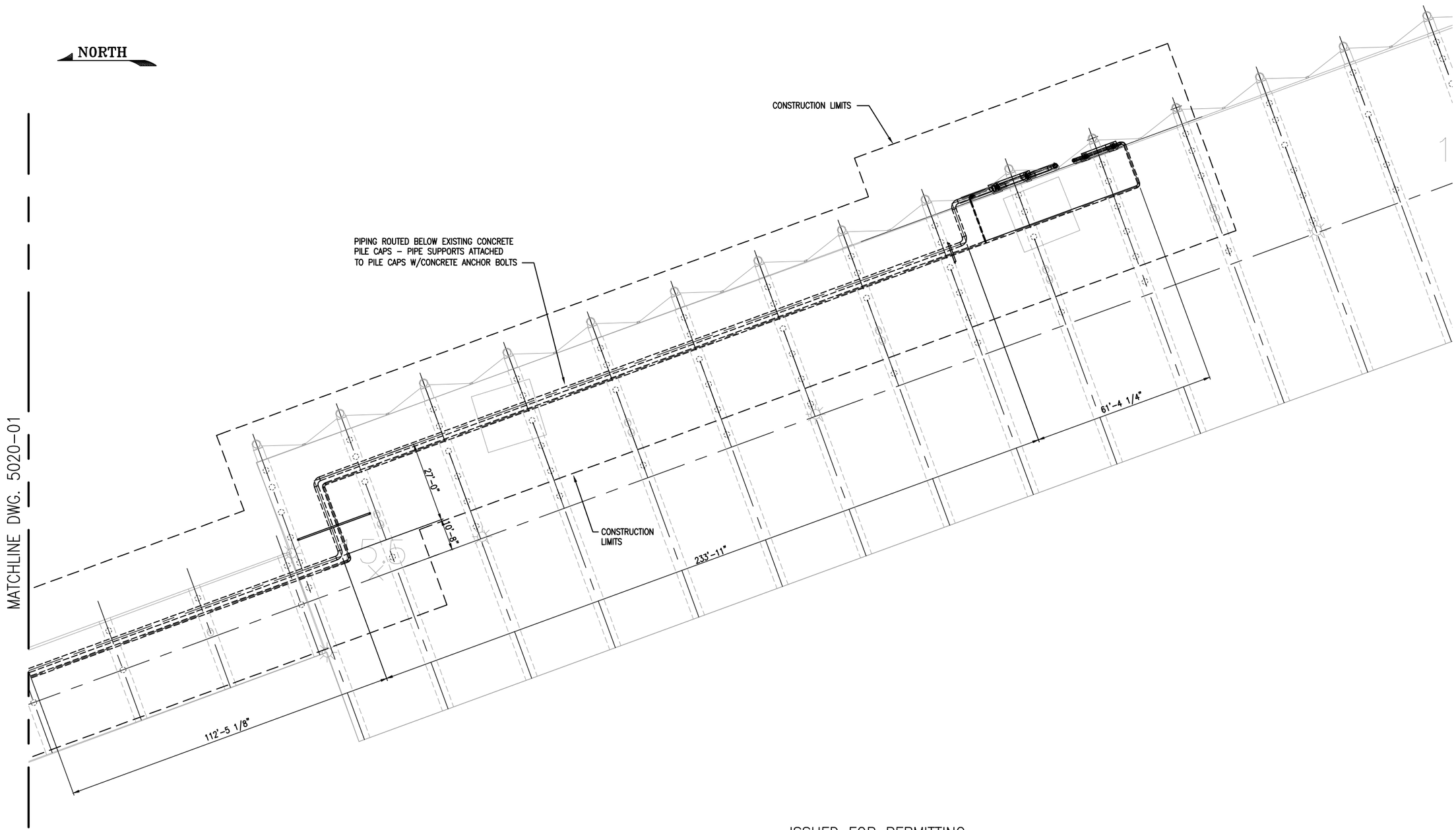

ISSUED FOR PERMITTING
NOT FOR CONSTRUCTION

0 10 20 30 40 50
SCALE IN FEET

THIS DRAWING AND THE INFORMATION CONTAINED THEREON IS CONFIDENTIAL. IT IS THE PROPERTY OF MATRIX SERVICE AND SHALL BE USED ONLY FOR THE PURPOSE INTENDED. IT SHALL NOT BE COPIED IN WHOLE OR IN PART, PARTS SHALL NOT BE FABRICATED FROM THE DRAWING OR THE INFORMATION DIVULGED WITHOUT MATRIX'S WRITTEN PERMISSION.

REV.	DATE	REVISION DESCRIPTION	BY	APVD.

SEAL

SCALE AS SHOWN

MATRIX SERVICE
INDUSTRIAL SERVICE CONTRACTOR

CUSTOMER: DCP MIDSTREAM
LPG STORAGE FACILITY SEARSPORT, MAINE

TITLE: PIPING PLAN
DOCK & TRESTLE

DRAWN BY:	DJK	16MAR11
CHECKED BY:	DCM	16MAR11
APPROV'D. BY:		
OFFICE	CONTRACT	
PITTSBURGH	4410–8173	
DWG. NO.	SHEET / SHEET	REV.
5010–01	OF 01	A

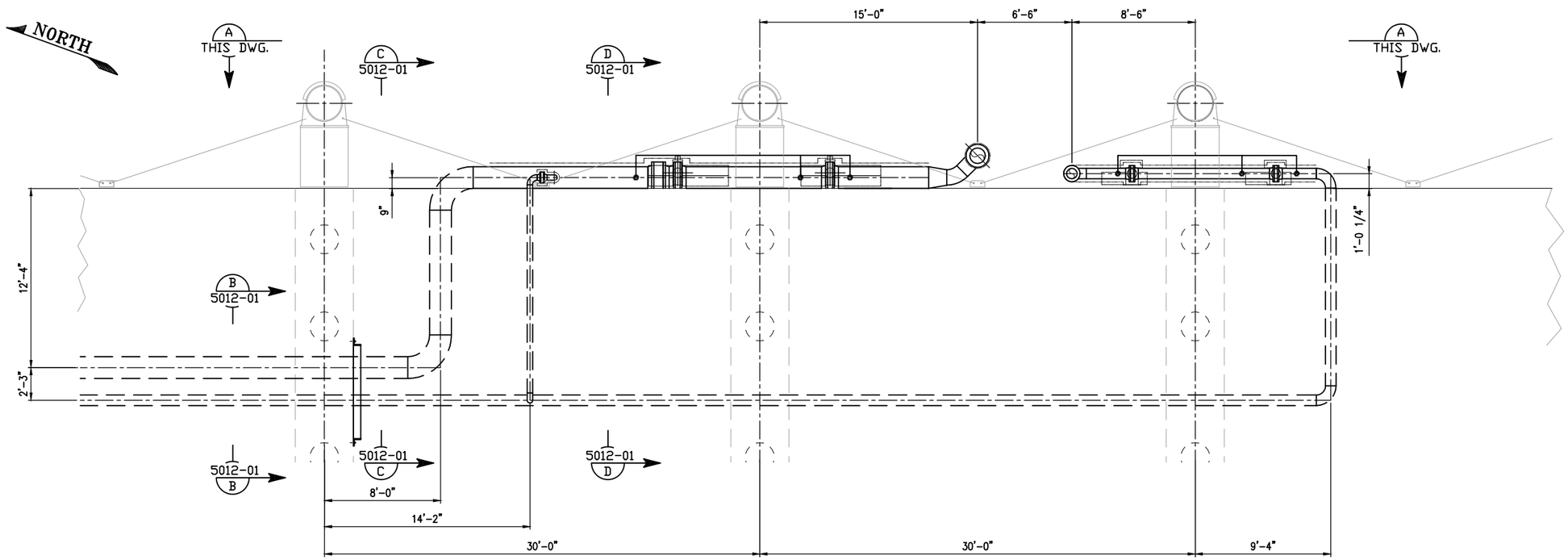

ENLARGED PLAN OF UNLOADING
STATION ON PIER

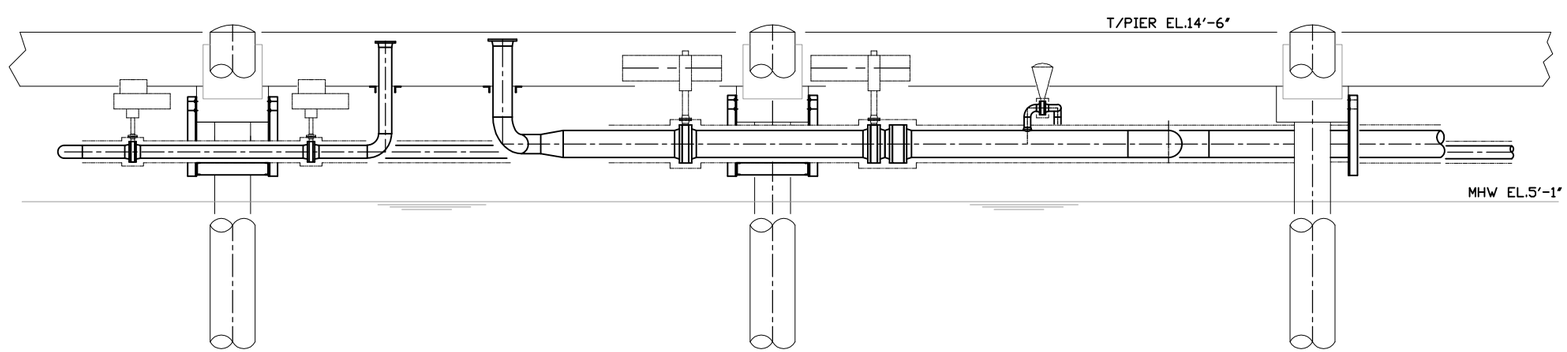

SECTION "A–A"

THIS DRAWING AND THE INFORMATION CONTAINED THEREON IS CONFIDENTIAL. IT IS THE PROPERTY OF MATRIX SERVICE AND SHALL BE USED ONLY FOR THE PURPOSE INTENDED. IT SHALL NOT BE COPIED IN WHOLE OR IN PART, PARTS SHALL NOT BE FABRICATED FROM THE DRAWING OR THE INFORMATION DIVULGED WITHOUT MATRIX'S WRITTEN PERMISSION.

REV.	DATE	REVISION DESCRIPTION	BY	APVD.

SEAL

SCALE 1/4" = 1'-0"

MATRIX SERVICE
INDUSTRIAL SERVICE CONTRACTOR

CUSTOMER: DCP MIDSTREAM
LPG STORAGE FACILITY SEARSPORT, MAINE

TITLE: PIPING PLAN & SECTION AT DOCK

DRAWN BY:	DJK	14FEB11
CHECKED BY:	MRM	14FEB11
APPROV'D. BY:		
OFFICE: PITTSBURGH	CONTRACT: 4410–8173	
DWG. NO. 5011–01	SHEET 01 OF	REV. A

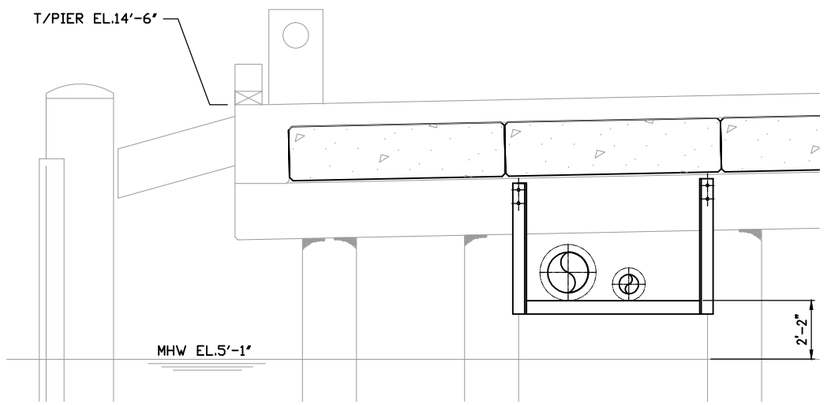

SECTION "B-B"

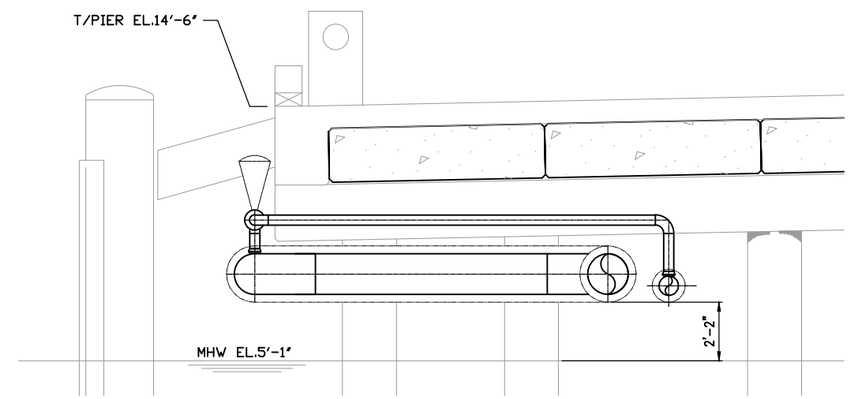

SECTION "C-C"

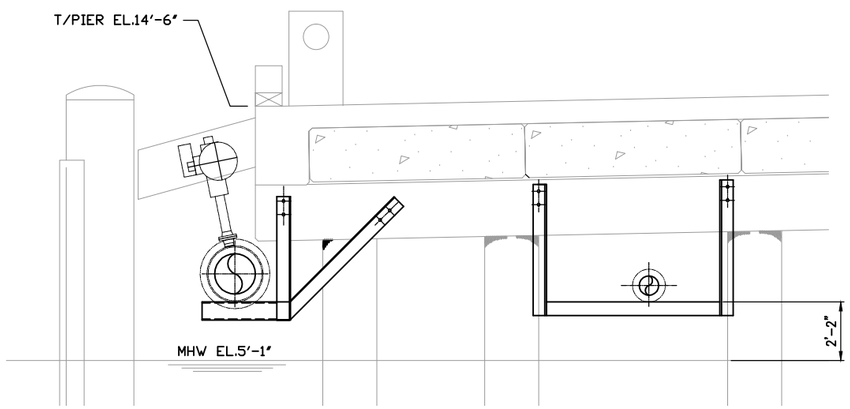

SECTION "D-D"

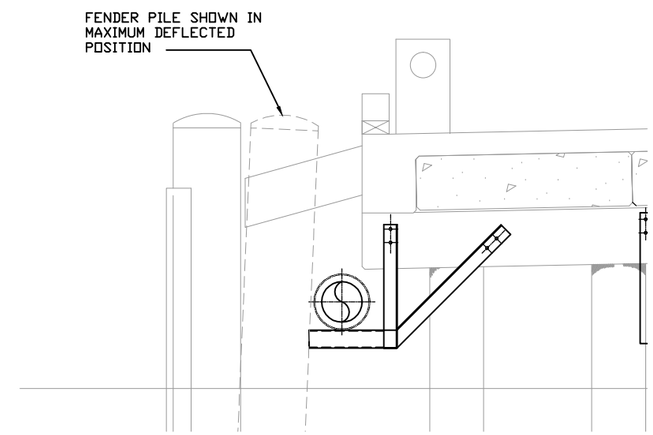

DETAIL OF DEFLECTED FENDER PILE

THIS DRAWING AND THE INFORMATION CONTAINED THEREON IS CONFIDENTIAL. IT IS THE PROPERTY OF MATRIX SERVICE AND SHALL BE USED ONLY FOR THE PURPOSE INTENDED. IT SHALL NOT BE COPIED IN WHOLE OR IN PART, PARTS SHALL NOT BE FABRICATED FROM THE DRAWING OR THE INFORMATION DIVULGED WITHOUT MATRIX'S WRITTEN PERMISSION.

REV.	DATE	REVISION DESCRIPTION	BY	APVD.

SEAL

SCALE 3/8" = 1'-0"

MATRIX SERVICE
INDUSTRIAL SERVICE CONTRACTOR

CUSTOMER: DCP MIDSTREAM
LPG STORAGE FACILITY SEARSPORT, MAINE

TITLE: PIPING SECTIONS AT DOCK

DRAWN BY:	DJK	14FEB11
CHECKED BY:	MRM	14FEB11
APPROV'D. BY:		
OFFICE: PITTSBURGH	CONTRACT: 4410-8173	
DWG. NO. 5012-01	SHEET 01 OF SHEET	REV. A

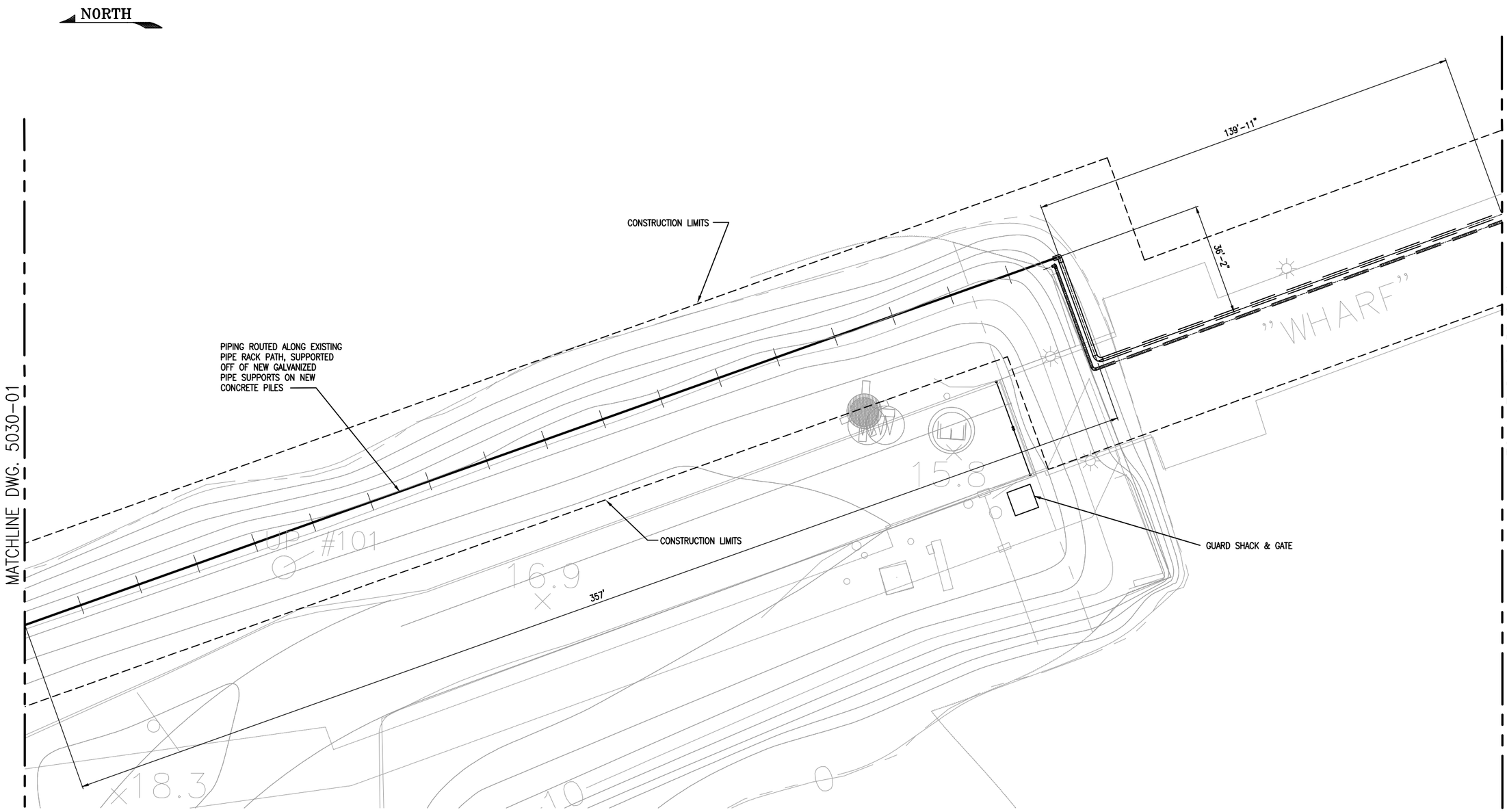

ISSUED FOR PERMITTING
NOT FOR CONSTRUCTION

0 10 20 30 40 50
SCALE IN FEET

THIS DRAWING AND THE INFORMATION CONTAINED THEREON IS CONFIDENTIAL. IT IS THE PROPERTY OF MATRIX SERVICE AND SHALL BE USED ONLY FOR THE PURPOSE INTENDED. IT SHALL NOT BE COPIED IN WHOLE OR IN PART, PARTS SHALL NOT BE FABRICATED FROM THE DRAWING OR THE INFORMATION DIVULGED WITHOUT MATRIX'S WRITTEN PERMISSION.

REV.	DATE	REVISION DESCRIPTION	BY	APVD.

SEAL

SCALE AS SHOWN

MATRIX SERVICE
INDUSTRIAL SERVICE CONTRACTOR

CUSTOMER: DCP MIDSTREAM
LPG STORAGE FACILITY SEARSPORT, MAINE

TITLE: PIPING PLAN
TRESTLE & WHARF

DRAWN BY:	DJK	16MAR11
CHECKED BY:	DCM	16MAR11
APPROV'D. BY:		
OFFICE	CONTRACT	
PITTSBURGH	4410-8173	
DWG. NO.	SHEET	REV.
5020-01	OF 01	A

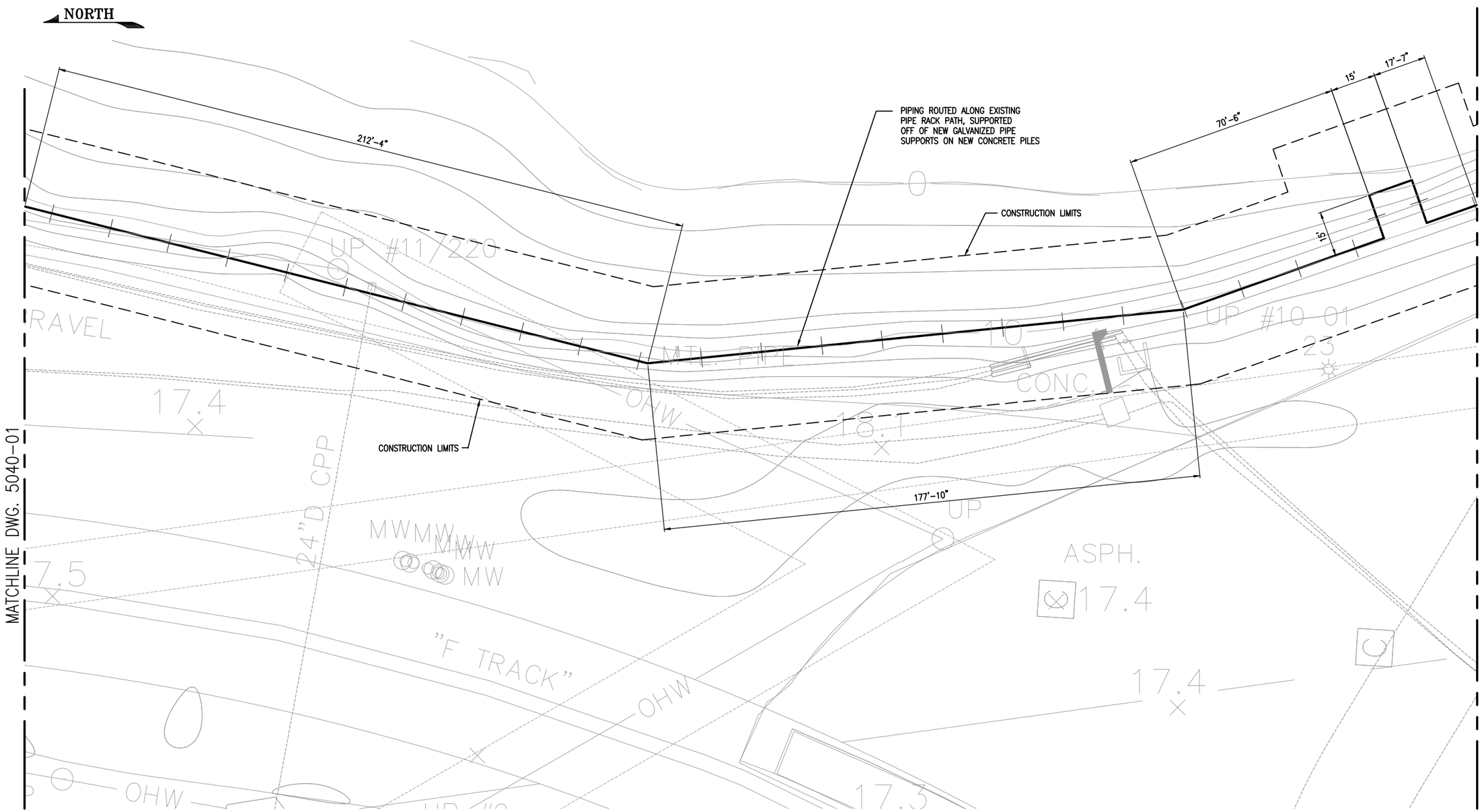

ISSUED FOR PERMITTING
NOT FOR CONSTRUCTION

0 10 20 30 40 50
SCALE IN FEET

THIS DRAWING AND THE INFORMATION CONTAINED THEREON IS CONFIDENTIAL. IT IS THE PROPERTY OF MATRIX SERVICE AND SHALL BE USED ONLY FOR THE PURPOSE INTENDED. IT SHALL NOT BE COPIED IN WHOLE OR IN PART, PARTS SHALL NOT BE FABRICATED FROM THE DRAWING OR THE INFORMATION DIVULGED WITHOUT MATRIX'S WRITTEN PERMISSION.

REV.	DATE	REVISION DESCRIPTION	BY	APVD.

SEAL

SCALE AS SHOWN

MATRIX SERVICE
INDUSTRIAL SERVICE CONTRACTOR

CUSTOMER: DCP MIDSTREAM
LPG STORAGE FACILITY SEARSPORT, MAINE

TITLE: PIPING PLAN
WATERS EDGE

DRAWN BY:	DJK	16MAR11
CHECKED BY:	DCM	16MAR11
APPROV'D. BY:		
OFFICE: PITTSBURGH	CONTRACT: 4410-8173	
DWG. NO. 5030-01	SHEET 01 OF SHEET	REV. A

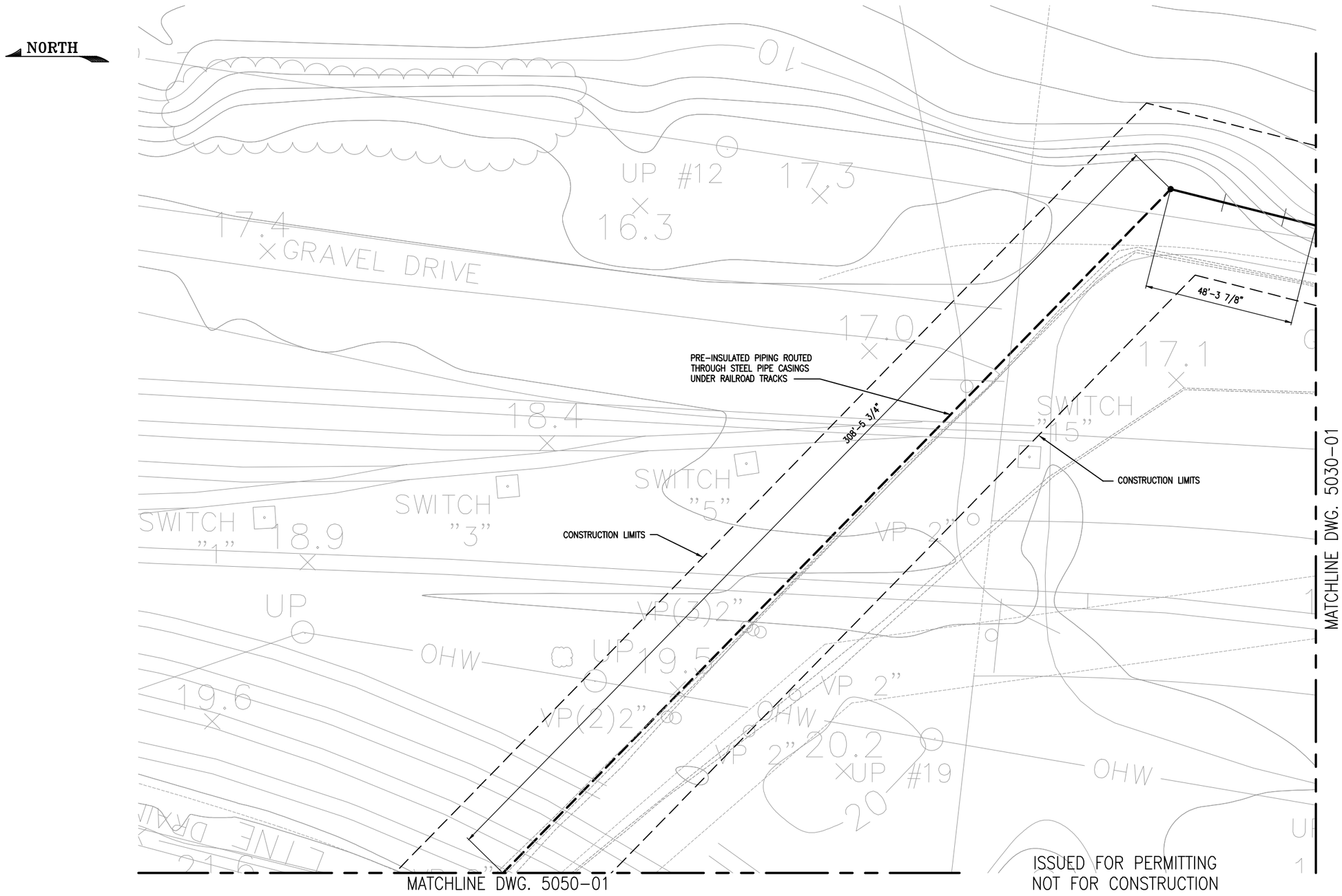

ISSUED FOR PERMITTING
NOT FOR CONSTRUCTION

0 10 20 30 40 50
SCALE IN FEET

THIS DRAWING AND THE INFORMATION CONTAINED THEREON IS CONFIDENTIAL. IT IS THE PROPERTY OF MATRIX SERVICE AND SHALL BE USED ONLY FOR THE PURPOSE INTENDED. IT SHALL NOT BE COPIED IN WHOLE OR IN PART, PARTS SHALL NOT BE FABRICATED FROM THE DRAWING OR THE INFORMATION DIVULGED WITHOUT MATRIX'S WRITTEN PERMISSION.

REV.	DATE	REVISION DESCRIPTION	BY	APVD.

SEAL

SCALE AS SHOWN

MATRIX SERVICE
INDUSTRIAL SERVICE CONTRACTOR

CUSTOMER: DCP MIDSTREAM
LPG STORAGE FACILITY SEARSPORT, MAINE

TITLE: PIPING PLAN
RAILROAD CROSSING

DRAWN BY:	DJK	16MAR11
CHECKED BY:	DCM	16MAR11
APPROV'D. BY:		
OFFICE: PITTSBURGH	CONTRACT: 4410-8173	
DWG. NO. 5040-01	SHEET 01 OF	REV. A

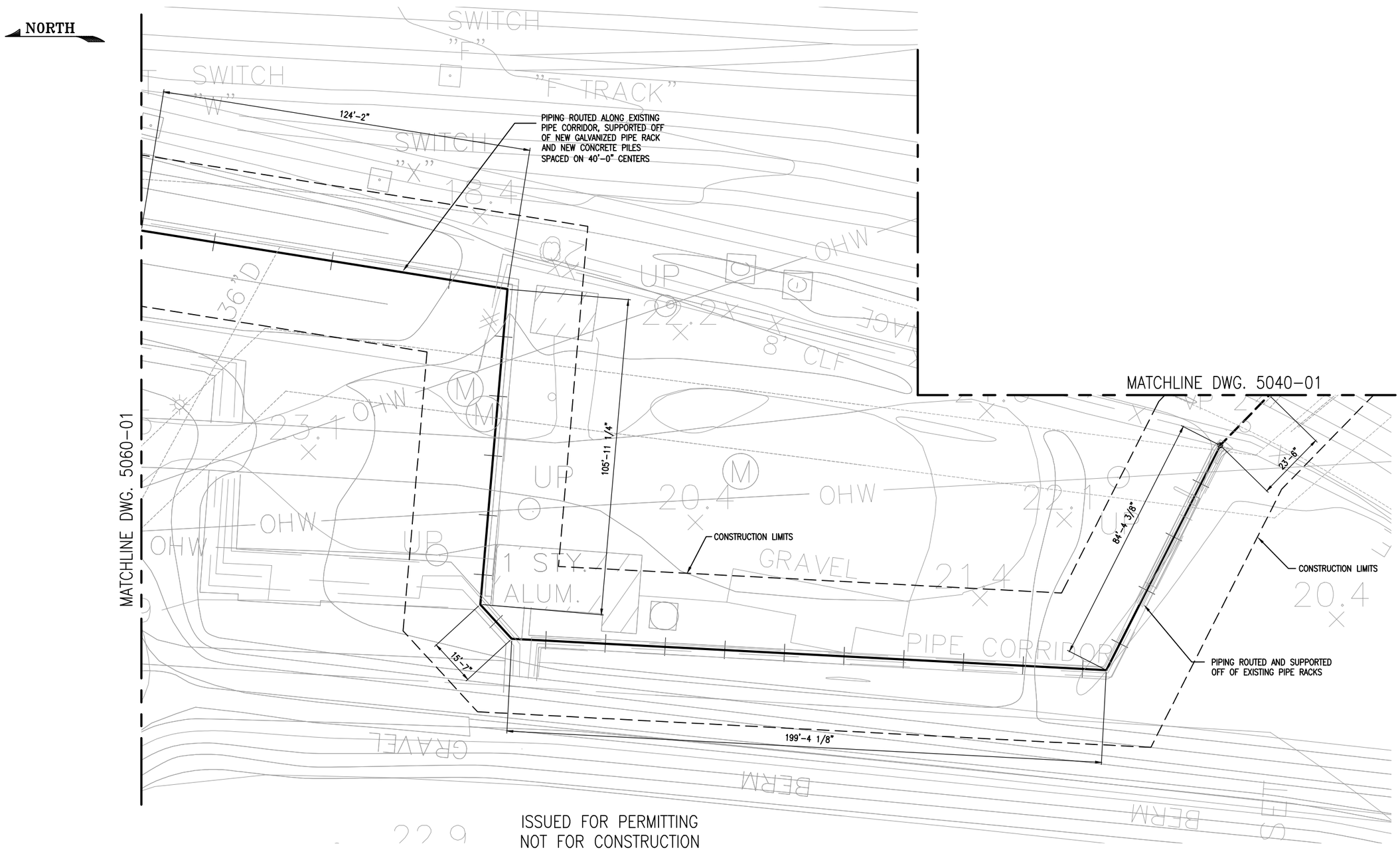

ISSUED FOR PERMITTING
NOT FOR CONSTRUCTION

0 10 20 30 40 50
SCALE IN FEET

THIS DRAWING AND THE INFORMATION CONTAINED THEREON IS CONFIDENTIAL. IT IS THE PROPERTY OF MATRIX SERVICE AND SHALL BE USED ONLY FOR THE PURPOSE INTENDED. IT SHALL NOT BE COPIED IN WHOLE OR IN PART, PARTS SHALL NOT BE FABRICATED FROM THE DRAWING OR THE INFORMATION DIVULGED WITHOUT MATRIX'S WRITTEN PERMISSION.

REV.	DATE	REVISION DESCRIPTION	BY	APV'D.

SEAL

SCALE AS SHOWN

MATRIX SERVICE
INDUSTRIAL SERVICE CONTRACTOR

CUSTOMER: DCP MIDSTREAM
LPG STORAGE FACILITY SEARSPORT, MAINE

TITLE: PIPING PLAN
EXISTING PIPE RACK

DRAWN BY:	DJK	16MAR11
CHECKED BY:	DCM	16MAR11
APPROV'D. BY:		
OFFICE: PITTSBURGH	CONTRACT: 4410-8173	
DWG. NO. 5050-01	SHEET 01 OF	REV. A

NORTH

MATCHLINE LOWER RIGHT

MATCHLINE DWG. 5050-01

231'-10"

CONSTRUCTION LIMITS

147'-4 7/8"

BLDG.

LOADING

UP

SWITCH

REBAR SE

0.5' UP

PIPE CORRIDOR

15'

15'

87'-7 3/8"

CONSTRUCTION LIMITS

TANKS

8'± CLF

PIPE COR

PIPING ROUTED ALONG EXISTING PIPE CORRIDOR, SUPPORTED OFF OF NEW GALVANIZED PIPE RACK AND NEW CONCRETE PILES SPACED ON 40'-0" CENTERS

PIPING MECHANICAL FLEX LOOP EVERY 360'-0", TYPICAL

CONSTRUCTION LIMITS

352'-5 5/8"

PLATFORM

MATCHLINE DWG. 5070-01

MATCHLINE UPPER LEFT

STORM WATER BASIN

15'

15'

113'-2"

CONSTRUCTION LIMITS

8'± CLF W/B.W.

ISSUED FOR PERMITTING
NOT FOR CONSTRUCTION

0 10 20 30 40 50

SCALE IN FEET

THIS DRAWING AND THE INFORMATION CONTAINED THEREON IS CONFIDENTIAL. IT IS THE PROPERTY OF MATRIX SERVICE AND SHALL BE USED ONLY FOR THE PURPOSE INTENDED. IT SHALL NOT BE COPIED IN WHOLE OR IN PART, PARTS SHALL NOT BE FABRICATED FROM THE DRAWING OR THE INFORMATION DIVULGED WITHOUT MATRIX'S WRITTEN PERMISSION.

REV.	DATE	REVISION DESCRIPTION	BY	APVD.

SEAL

SCALE AS SHOWN

MATRIX SERVICE
INDUSTRIAL SERVICE CONTRACTOR

CUSTOMER: DCP MIDSTREAM
LPG STORAGE FACILITY SEARSPORT, MAINE

TITLE: PIPING PLAN
ALONG RAILROAD

DRAWN BY:	DJK	16MAR11
CHECKED BY:	DCM	16MAR11
APPROV'D. BY:		
OFFICE: PITTSBURGH	CONTRACT: 4410-8173	
DWG. NO. 5060-01	SHEET 01 OF SHEET	REV. A

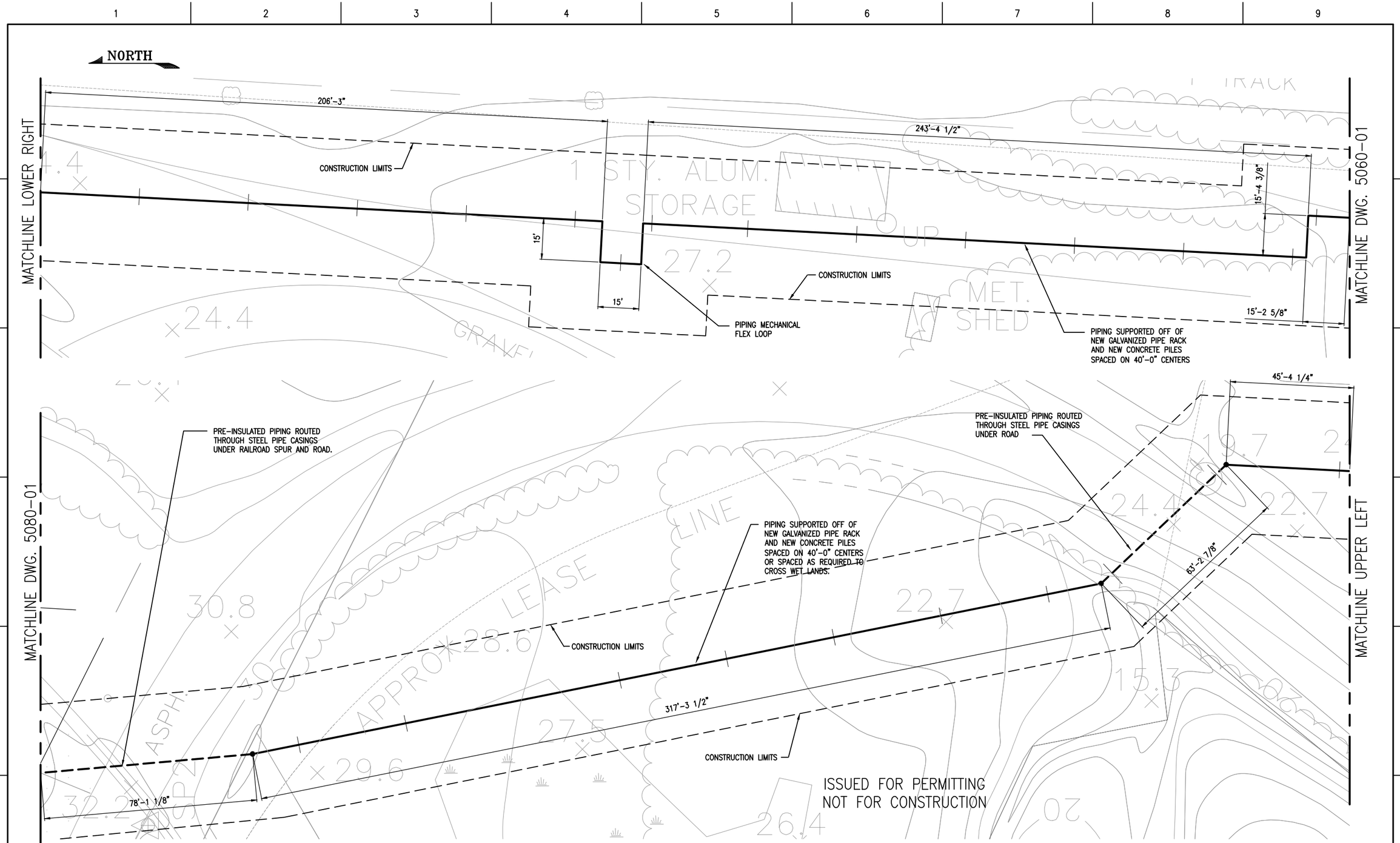

0 10 20 30 40 50
SCALE IN FEET

THIS DRAWING AND THE INFORMATION CONTAINED THEREON IS CONFIDENTIAL. IT IS THE PROPERTY OF MATRIX SERVICE AND SHALL BE USED ONLY FOR THE PURPOSE INTENDED. IT SHALL NOT BE COPIED IN WHOLE OR IN PART, PARTS SHALL NOT BE FABRICATED FROM THE DRAWING OR THE INFORMATION DIVULGED WITHOUT MATRIX'S WRITTEN PERMISSION.

REV.	DATE	REVISION DESCRIPTION	BY	APVD.

SEAL

SCALE AS SHOWN

MATRIX SERVICE
INDUSTRIAL SERVICE CONTRACTOR

CUSTOMER: DCP MIDSTREAM
LPG STORAGE FACILITY SEARSPORT, MAINE

TITLE: PIPING PLAN
ROAD & CREEK CROSSING

DRAWN BY:	DJK	16MAR11
CHECKED BY:	DCM	16MAR11
APPROV'D. BY:		
OFFICE: PITTSBURGH	CONTRACT: 4410-8173	
DWG. NO. 5070-01	SHEET 01 OF SHEET	REV. A

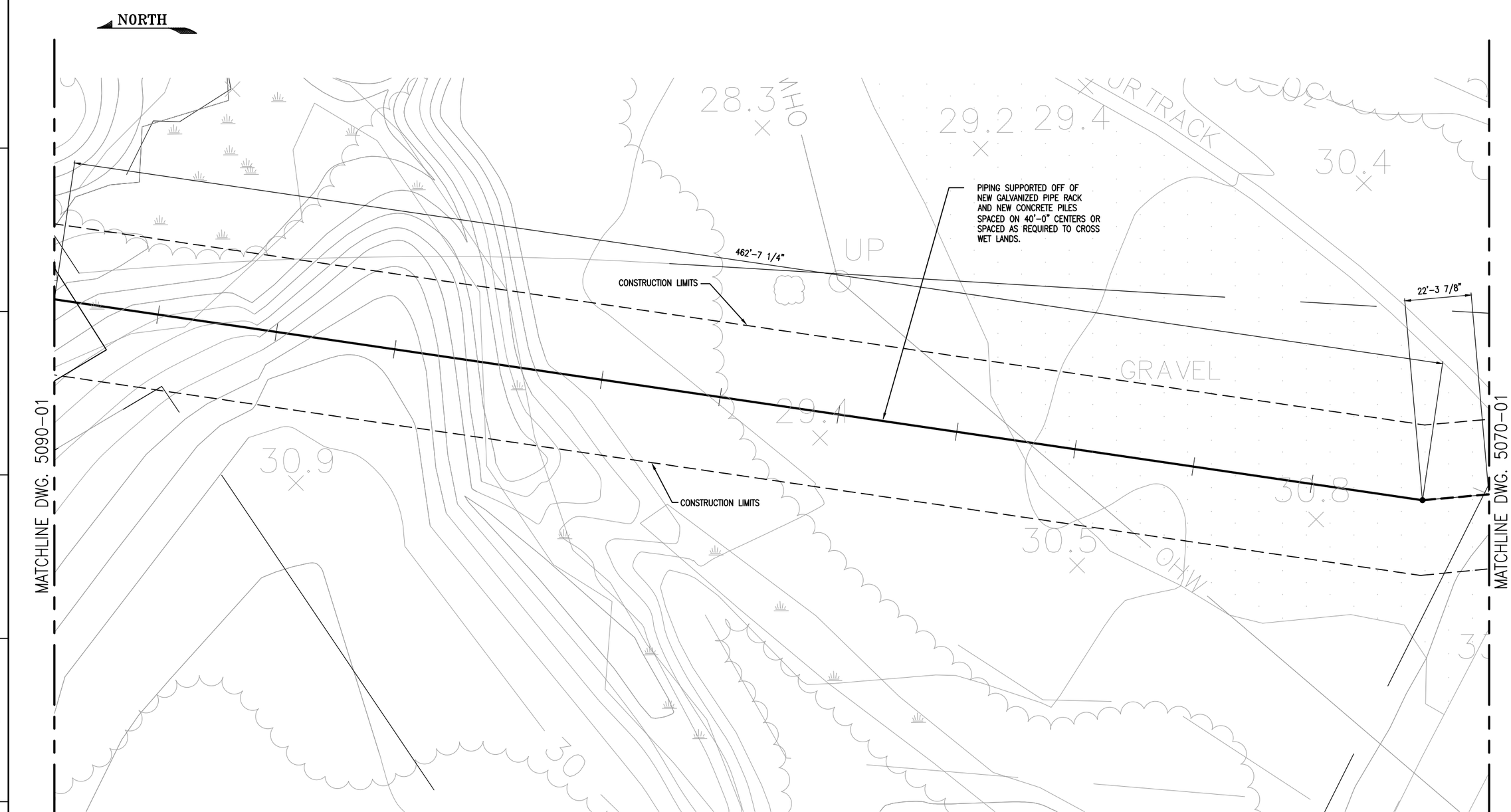

ISSUED FOR PERMITTING
NOT FOR CONSTRUCTION

0 10 20 30 40 50
SCALE IN FEET

THIS DRAWING AND THE INFORMATION CONTAINED THEREON IS CONFIDENTIAL. IT IS THE PROPERTY OF MATRIX SERVICE AND SHALL BE USED ONLY FOR THE PURPOSE INTENDED. IT SHALL NOT BE COPIED IN WHOLE OR IN PART, PARTS SHALL NOT BE FABRICATED FROM THE DRAWING OR THE INFORMATION DIVULGED WITHOUT MATRIX'S WRITTEN PERMISSION.

REV.	DATE	REVISION DESCRIPTION	BY	APVD.

SEAL

SCALE AS SHOWN

MATRIX SERVICE
INDUSTRIAL SERVICE CONTRACTOR

CUSTOMER: DCP MIDSTREAM
LPG STORAGE FACILITY SEARSPORT, MAINE

TITLE: PIPING PLAN
WET LANDS CROSSING

DRAWN BY:	DJK	16MAR11
CHECKED BY:	DCM	16MAR11
APPROV'D. BY:		
OFFICE: PITTSBURGH	CONTRACT: 4410-8173	
DWG. NO. 5080-01	SHEET 01 OF SHEET	REV. A

NORTH

CONSTRUCTION LIMITS

NEW ROAD

87'-9 1/2"

301'-1"

PIPING SUPPORTED OFF OF NEW GALVANIZED PIPE RACK AND NEW CONCRETE PILES SPACED ON 40'-0" CENTERS OR SPACED AS REQUIRED TO CROSS WET LANDS.

CONSTRUCTION LIMITS

171'-2 5/8"

30

20

30

MATCHLINE DWG. 5080-01

MATCHLINE DWG. 5100-01

ISSUED FOR PERMITTING
NOT FOR CONSTRUCTION

0 10 20 30 40 50
SCALE IN FEET

THIS DRAWING AND THE INFORMATION CONTAINED THEREON IS CONFIDENTIAL. IT IS THE PROPERTY OF MATRIX SERVICE AND SHALL BE USED ONLY FOR THE PURPOSE INTENDED. IT SHALL NOT BE COPIED IN WHOLE OR IN PART, PARTS SHALL NOT BE FABRICATED FROM THE DRAWING OR THE INFORMATION DIVULGED WITHOUT MATRIX'S WRITTEN PERMISSION.

REV.	DATE	REVISION DESCRIPTION	BY	APVD.

SEAL

SCALE AS SHOWN

MATRIX SERVICE
INDUSTRIAL SERVICE CONTRACTOR

CUSTOMER: DCP MIDSTREAM
LPG STORAGE FACILITY SEARSPORT, MAINE

TITLE: PIPING PLAN
LPG FACILITY BOUNDARY

DRAWN BY:	DJK	16MAR11
CHECKED BY:	DCM	16MAR11
APPROV'D. BY:		
OFFICE: PITTSBURGH	CONTRACT: 4410-8173	
DWG. NO. 5090-01	SHEET 01 OF SHEET 01	REV. A

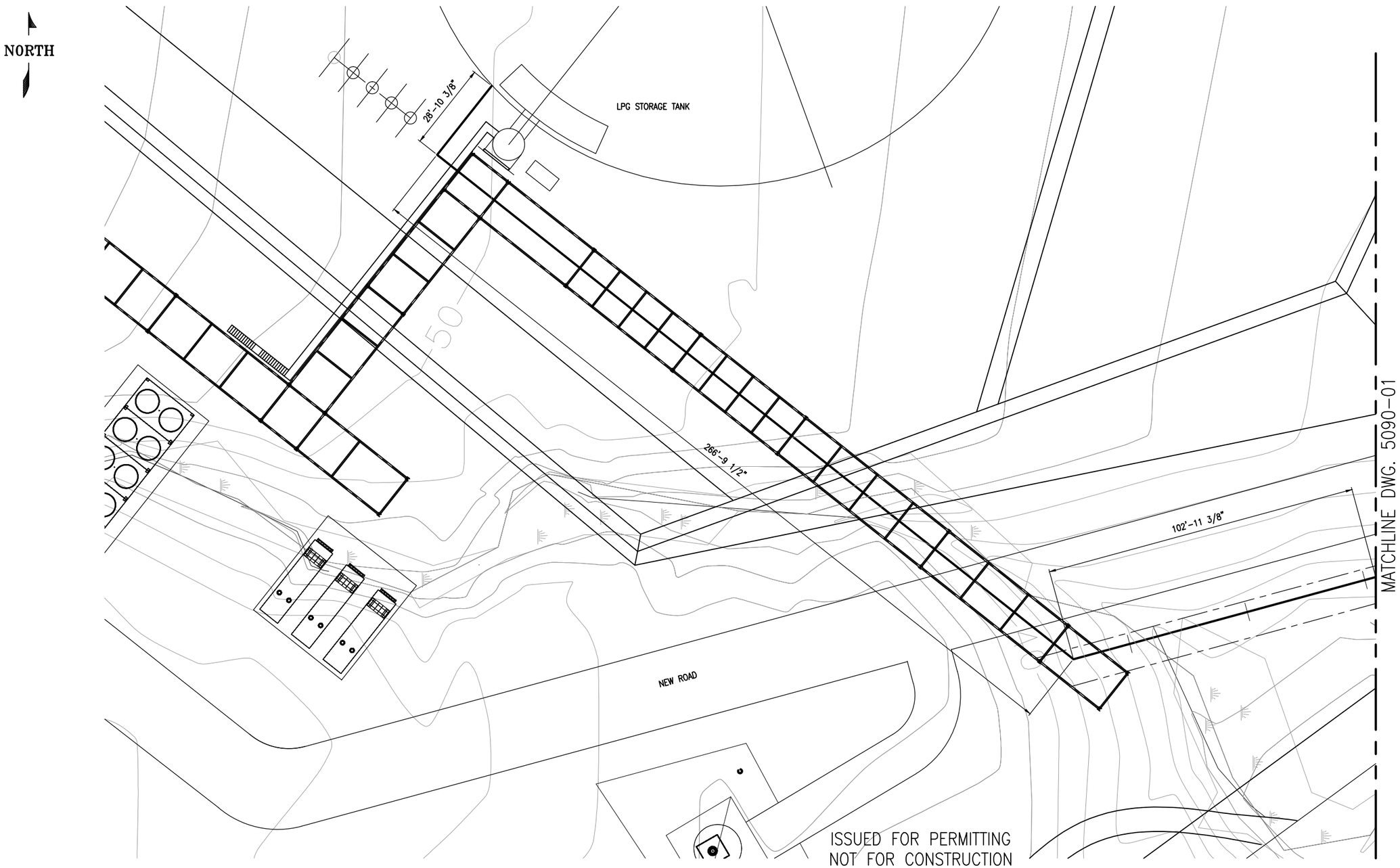

0 10 20 30 40 50
SCALE IN FEET

THIS DRAWING AND THE INFORMATION CONTAINED THEREON IS CONFIDENTIAL. IT IS THE PROPERTY OF MATRIX SERVICE AND SHALL BE USED ONLY FOR THE PURPOSE INTENDED. IT SHALL NOT BE COPIED IN WHOLE OR IN PART, PARTS SHALL NOT BE FABRICATED FROM THE DRAWING OR THE INFORMATION DIVULGED WITHOUT MATRIX'S WRITTEN PERMISSION.

REV.	DATE	REVISION DESCRIPTION	BY	APVD.
B	8JUN11	REVISED DIKE	DJK	DCM

SEAL

SCALE AS SHOWN

MATRIX SERVICE
INDUSTRIAL SERVICE CONTRACTOR

CUSTOMER: DCP MIDSTREAM
LPG STORAGE FACILITY SEARSPORT, MAINE

TITLE: PIPING PLAN
LPG FACILITY

DRAWN BY:	DJK	16MAR11
CHECKED BY:	DCM	16MAR11
APPROV'D. BY:		
OFFICE: PITTSBURGH	CONTRACT: 4410-8173	
DWG. NO. 5100-01	SHEET 01 OF	REV. B

APPENDIX 12A

Pre- and Post-Development Drainage Plans

Construction Detail Drawings

Erosion Control Detail Drawings

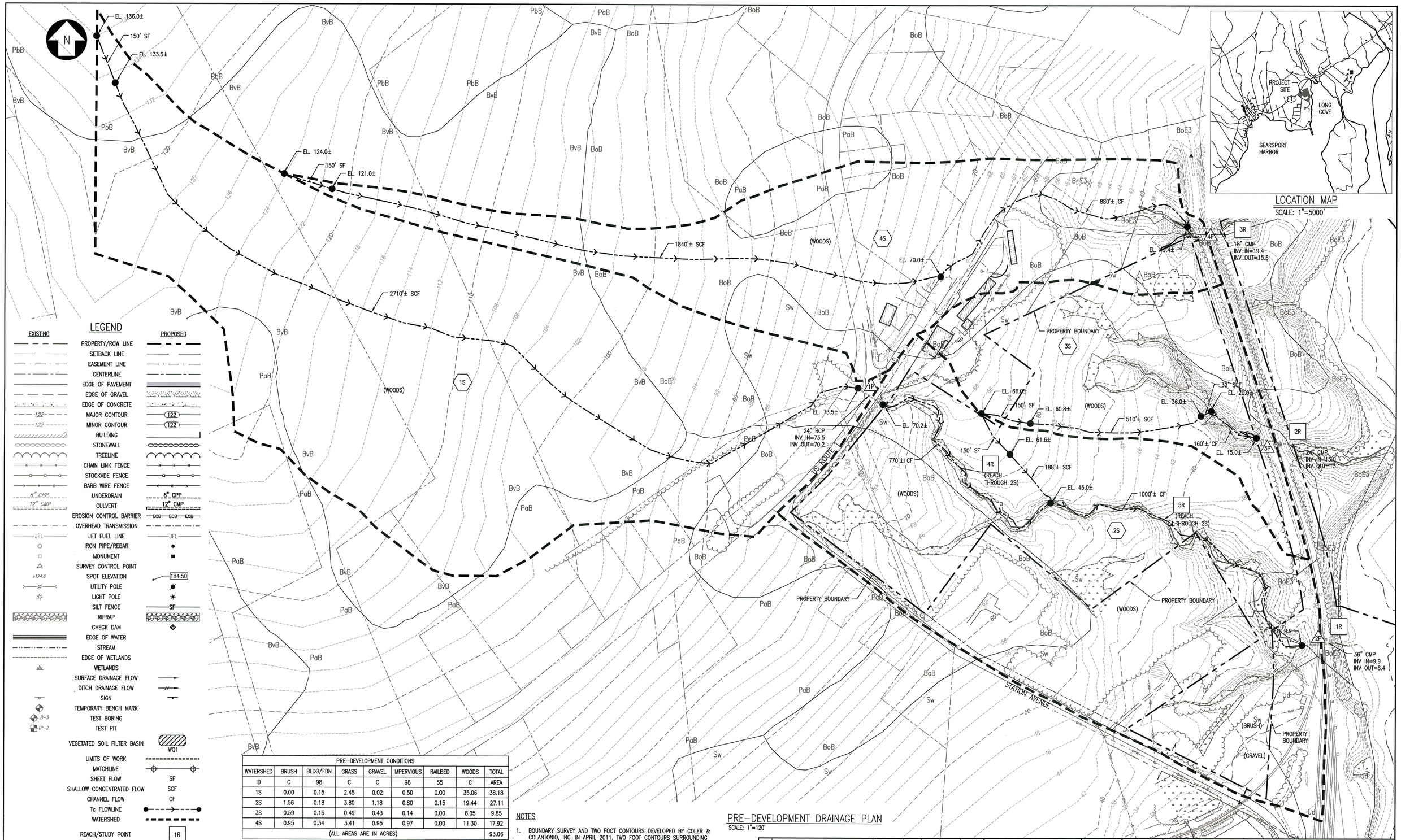

LEGEND

EXISTING		PROPOSED
	PROPERTY/ROW LINE	
	SETBACK LINE	
	EASEMENT LINE	
	CENTERLINE	
	EDGE OF PAVEMENT	
	EDGE OF GRAVEL	
	EDGE OF CONCRETE	
122	MAJOR CONTOUR	122
122	MINOR CONTOUR	122
	BUILDING	
	STONEWALL	
	TREELINE	
	CHAIN LINK FENCE	
	STOCKADE FENCE	
	BARB WIRE FENCE	
6" CPP	UNDERDRAIN	6" CPP
12" CMP	CULVERT	12" CMP
	EROSION CONTROL BARRIER	ECB
	OVERHEAD TRANSMISSION	
JFL	JET FUEL LINE	JFL
	IRON PIPE/REBAR	
	MONUMENT	
	SURVEY CONTROL POINT	
x124.6	SPOT ELEVATION	184.50
	UTILITY POLE	
	LIGHT POLE	
	SILT FENCE	SF
	RIPRAP	
	CHECK DAM	
	EDGE OF WATER	
	STREAM	
	EDGE OF WETLANDS	
	WETLANDS	
	SURFACE DRAINAGE FLOW	
	DITCH DRAINAGE FLOW	
	SIGN	
	TEMPORARY BENCH MARK	
B-3	TEST BORING	
TP-2	TEST PIT	
	VEGETATED SOIL FILTER BASIN	WQ1
	LIMITS OF WORK	
	MATCHLINE	
	SHEET FLOW	SF
	SHALLOW CONCENTRATED FLOW	SCF
	CHANNEL FLOW	CF
	Tc FLOWLINE	
	WATERSHED	
	REACH/STUDY POINT	1R
	SUBCATCHMENT ID	1S
	POOL NODE	1P

120 0 120 240 FT.

SCALE: 1"=120'

PRE-DEVELOPMENT CONDITIONS								
WATERSHED	BRUSH	BLDG/FDN	GRASS	GRAVEL	IMPERVIOUS	RAILBED	WOODS	TOTAL
ID	C	98	C	C	98	55	C	AREA
1S	0.00	0.15	2.45	0.02	0.50	0.00	35.06	38.18
2S	1.56	0.18	3.80	1.18	0.80	0.15	19.44	27.11
3S	0.59	0.15	0.49	0.43	0.14	0.00	8.05	9.85
4S	0.95	0.34	3.41	0.95	0.97	0.00	11.30	17.92
(ALL AREAS ARE IN ACRES)								93.06

SOILS LEGEND

ABBREVIATION	SOIL TYPE	SLOPE (%)	HYDROLOGIC SOIL GROUP	VEGETATED PERMISSIBLE VELOCITY (FT/S)
BoB	BOOTHBAY	3 TO 8	C	3.0
BvB	BRAYTON	0 TO 8	C	3.0
BoB3	BOOTHBAY	25 TO 45	C	3.0
PaB	PERU	3 TO 8	C	3.5
PbB	PERU	3 TO 8	C	3.5
Sw	SWANVILLE	0 TO 8	C	3.0
Ud	UDORTHENTS	0 TO 3	C	3.0

NOTES

1. BOUNDARY SURVEY AND TWO FOOT CONTOURS DEVELOPED BY COLER & COLANTONIO, INC. IN APRIL 2011. TWO FOOT CONTOURS SURROUNDING THE PROJECT ARE DEVELOPED FROM USGS TOPOGRAPHIC QUADRANGLE.
2. PLANIMETRIC AND TOPOGRAPHIC INFORMATION AS SHOWN UTM ZONE 19 FEET, NAD83. VERTICAL DATUM NAVD 1988 FEET.
3. SOIL SURVEY INFORMATION SOURCES PROVIDED BY NRCS SOIL SURVEY DATA FOR WALDO COUNTY, MAINE.

ISSUED FOR PERMITTING
NOT FOR CONSTRUCTION

PRE-DEVELOPMENT DRAINAGE PLAN

SCALE: 1"=120'

NO.	REVISION	DATE	BY	CK	P.E. STAMPED BY	P.E. No.

STATE OF MAINE
DANIEL T. BUTLER
No. 6796
LICENSED
PROFESSIONAL ENGINEER

CLIENT APPROVAL
APPROVED BY
COMPANY
DATE

PGT DESIGNED
CMH DRAWN
PMM CHECKED
DTB APPROVED
REVIEWED

PRE-DEVELOPMENT DRAINAGE PLAN
DCP SEARSPORT PROPANE TERMINAL

DCP MIDSTREAM PARTNERS, LLC
SEARSPORT MAINE

TRC
249 WESTERN AVENUE
AUGUSTA, ME 04330
PROJECT NO: 179023
SCALE: AS NOTED DATE: 03/25/11

179023-C1

REV. A

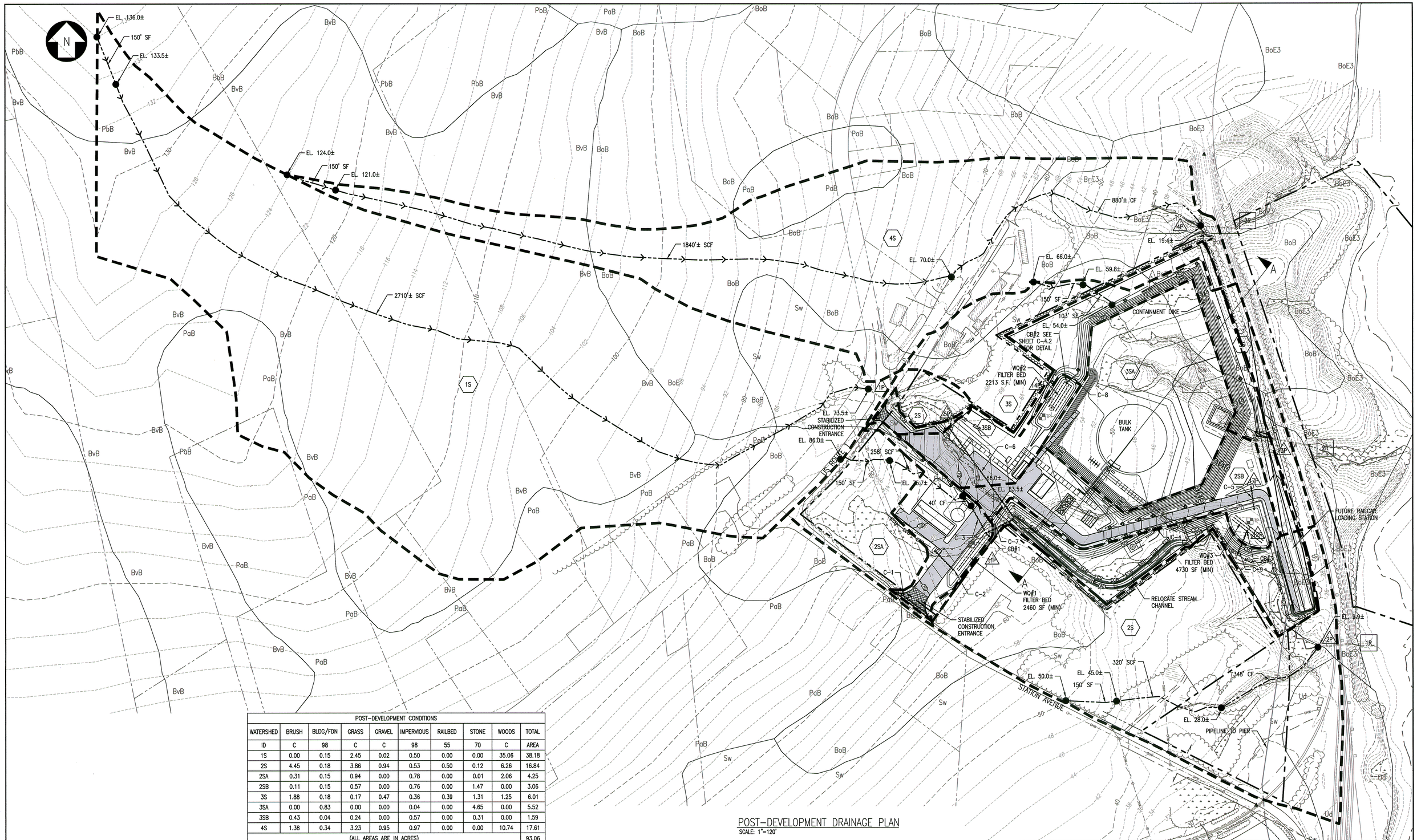

POST-DEVELOPMENT DRAINAGE PLAN

SCALE: 1"=120'

POST-DEVELOPMENT CONDITIONS									
WATERSHED	BRUSH	BLDG/FDN	GRASS	GRAVEL	IMPERVIOUS	RAILBED	STONE	WOODS	TOTAL
ID	C	98	C	C	98	55	70	C	AREA
1S	0.00	0.15	2.45	0.02	0.50	0.00	0.00	35.06	38.18
2S	4.45	0.18	3.86	0.94	0.53	0.50	0.12	6.26	16.84
2SA	0.31	0.15	0.94	0.00	0.78	0.00	0.01	2.06	4.25
2SB	0.11	0.15	0.57	0.00	0.76	0.00	1.47	0.00	3.06
3S	1.88	0.18	0.17	0.47	0.36	0.39	1.31	1.25	6.01
3SA	0.00	0.83	0.00	0.00	0.04	0.00	4.65	0.00	5.52
3SB	0.43	0.04	0.24	0.00	0.57	0.00	0.31	0.00	1.59
4S	1.38	0.34	3.23	0.95	0.97	0.00	0.00	10.74	17.61
(ALL AREAS ARE IN ACRES)									93.06

SOILS LEGEND

ABBREVIATION	SOIL TYPE	SLOPE (%)	HYDROLOGIC SOIL GROUP	VEGETATED PERMISSIBLE VELOCITY (FT/S)
BoB	BOOTHBAY	3 TO 8	C	3.0
BvB	BRAYTON	0 TO 8	C	3.0
BoB3	BOOTHBAY	25 TO 45	C	3.0
PaB	PERU	3 TO 8	C	3.5
PbB	PERU	3 TO 8	C	3.5
Sw	SWANVILLE	0 TO 8	C	3.0
Ud	UDORTHENTS	0 TO 3	C	3.0

NOTES

1. SEE DRAWING 179023-C1 FOR GENERAL NOTES AND LEGEND.
2. SEE MATRIX SERVICE DRAWING 2001-01 FOR SPECIFIC BUILDING AND EQUIPMENT LAYOUT.

ISSUED FOR PERMITTING
NOT FOR CONSTRUCTION

120 0 120 240 FT.

SCALE: 1"=120'

NO.	REVISION	DATE	BY	CK	P.E. STAMPED BY	P.E. No.

STATE OF MAINE
DANIEL T. BUTLER
No. 6796
LICENSED
PROFESSIONAL ENGINEER

CLIENT APPROVAL

APPROVED BY

COMPANY

DATE

PGT DESIGNED
CMH DRAWN
PMM CHECKED
DTB APPROVED
REVIEWED

POST-DEVELOPMENT DRAINAGE PLAN
DCP SEARSPORT PROPANE TERMINAL

DCP MIDSTREAM PARTNERS, LLC
SEARSPORT MAINE

TRC
249 WESTERN AVENUE
AUGUSTA, ME 04330
PROJECT NO: 179023
SCALE: AS NOTED DATE: 06/08/11

179023-C2

REV. B

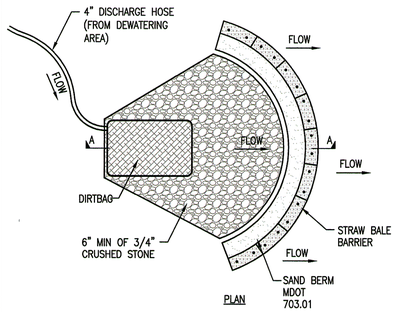

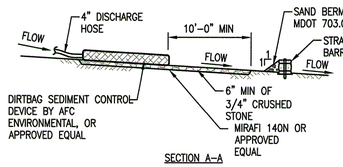

DEWATERING DETAIL NOTES:

1. DIRT BAG MATERIAL BASED ON PARTICLE SIZE IN DIRTY WATER, I.E. FOR COARSE PARTICLES A WOVEN MATERIAL; FOR SILTS/CLAYS A NON-WOVEN MATERIAL.

2. DO NOT OVER PRESSURIZE DIRT BAG OR USE BEYOND CAPACITY.

3. LOCATE DISCHARGE SITE AS INDICATED ON SITE GRADING PLAN.

4. DOWNGRADIENT RECEIVING AREA MUST BE WELL VEGETATED OR OTHERWISE STABLE FROM EROSION, E.G. FOREST FLOOR OR COARSE GRAVEL/STONE.

5. DISCHARGE NOT PERMITTED WITHIN 75' OF A STREAM OR WETLAND.

DEWATERING SYSTEM DETAIL

NOT TO SCALE

DEWATERING NOTES

1. THE CONTRACTOR SHALL INSTALL, MAINTAIN, AND OPERATE ALL CHANNELS, SUMPS, AND ALL OTHER TEMPORARY DIVERSION AND PROTECTIVE WORKS NEEDED TO DIVERT STREAM FLOW AND OTHER SURFACE WATER THROUGH OR AROUND THE CONSTRUCTION SITE. CONTROL OF SURFACE WATER SHALL BE CONTINUOUS DURING THE PERIOD THAT DAMAGE TO CONSTRUCTION WORK COULD OCCUR.

2. OPEN EXCAVATIONS SHALL BE DEWATERED AND KEPT FREE OF STANDING WATER AND MUDDY CONDITIONS AS NECESSARY FOR THE PROPER EXECUTION OF THE WORK. THE CONTRACTOR SHALL FURNISH, INSTALL, OPERATE, AND MAINTAIN ALL DRAINS, SUMPS AND ALL OTHER EQUIPMENT REQUIRED TO PROPERLY DEWATER THE SITE. DEWATERING SYSTEMS THAT CAUSE A LOSS OF SOIL FINES FROM THE FOUNDATION AREAS WILL NOT BE PERMITTED.

3. INSTALL DIVERSION DITCHES OR BERMS IF NECESSARY TO MINIMIZE THE AMOUNT OF CLEAN STORM WATER RUNOFF ALLOWED INTO THE EXCAVATED AREA.

4. REMOVAL OF WATER FROM THE CONSTRUCTION SITE SHALL BE ACCOMPLISHED SO THAT EROSION AND THE TRANSPORTING OF SEDIMENT AND OTHER POLLUTANTS ARE MINIMIZED.

5. DISCHARGE DEWATERING EFFLUENT TO AREAS AS INDICATED ON THE SITE GRADING PLAN. DISCHARGE SHALL BE IN SHEET FLOW.

6. DEWATERING IN PERIODS OF INTENSE, HEAVY RAIN, WHEN THE INFILTRATIVE CAPACITY OF THE SOIL IS EXCEEDED, SHALL BE AVOIDED.

7. FLOW TO THE SEDIMENT REMOVAL STRUCTURE MAY NOT EXCEED THE STRUCTURE'S CAPACITY TO SETTLE AND FILTER FLOW OR THE STRUCTURE'S VOLUME CAPACITY.

8. WHEN TEMPORARY WORKS ARE NO LONGER NEEDED, THE CONTRACTOR SHALL REMOVE AND RETURN THE AREA TO A CONDITION SIMILAR TO THAT WHICH EXISTED BEFORE CONSTRUCTION. AREAS WHERE TEMPORARY WORKS WERE LOCATED SHALL BE GRADED FOR SIGHTLY APPEARANCE WITH NO OBSTRUCTION TO NATURAL SURFACE WATER FLOWS OR THE PROPER FUNCTIONING AND ACCESS TO THE WORKS OF IMPROVEMENT INSTALLED. THE CONTRACTOR SHALL EXERCISE EXTREME CARE DURING THE REMOVAL STAGES TO MINIMIZE THE LOSS OF SOIL SEDIMENT AND DEBRIS THAT WAS TRAPPED DURING CONSTRUCTION.

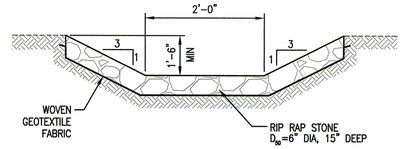

TYPICAL RIP RAP DRAINAGE SWALE

NOT TO SCALE

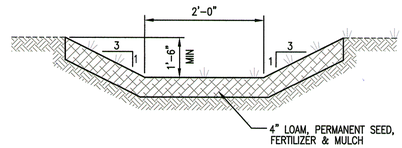

TYPICAL VEGETATED DRAINAGE SWALE

NOT TO SCALE

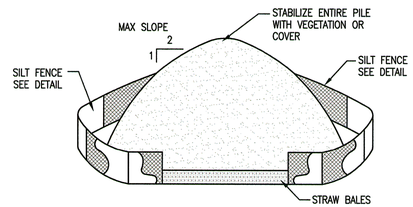

INSTALLATION NOTES:

1. AREA CHOSEN FOR STOCKPILING OPERATIONS SHALL BE DRY AND STABLE.

2. MAXIMUM SLOPE OF STOCKPILE SHALL BE 2H:1V.

3. UPON COMPLETION OF SOIL STOCKPILING, EACH PILE SHALL BE SURROUNDED WITH EITHER SILT FENCING OR STRAW BALES, THEN STABILIZED WITH VEGETATION OR COVERED.

TYPICAL TOPSOIL STOCKPILE

NOT TO SCALE

CONSTRUCTION NOTES:

1. 6" STONE TOPPING
   1.1. CRUSHED STONE TOPPING SHALL BE OBTAINED FROM ROCK OF UNIFORM QUALITY AND SHALL CONSIST OF CLEAN, ANGULAR FRAGMENTS OF QUARRIED ROCK FREE FROM SOFT DISINTEGRATED PIECES OR OTHER OBJECTIONABLE MATTER.
   1.2. THE STONE TOPPING SHALL MEET THE FOLLOWING BLEND REQUIREMENTS:

SIEVE DESIGNATION	BLEND RATIO
1½"	50% by weight
¾"	50% by weight

2. 18" GRAVEL FILL – GRAVEL FILL SHALL MEET MDOT SPECIFICATION 703.06 "TYPE A"

3. RIP RAP – D_{50}=6" DIAMETER (MDOT 703.29) 15" DEEP WHERE SHOWN ON PLANS INSTALL ON A NON-WOVEN GEOTEXTILE.

4. CULVERT PIPING – DRAINAGE PIPING RCP CLASS III.

5. GEOTEXTILE FABRIC – NON-WOVEN GEOTEXTILE FABRIC SHALL BE MIRAFI 140N OR APPROVED EQUAL. WOVEN GEOTEXTILE FABRIC SHALL BE MIRAFI 500X OR APPROVED EQUAL.

6. 2" DIAMETER STONE USED FOR STONE CHECK DAMS AND STABILIZED CONSTRUCTION ENTRANCES SHALL CONFORM TO THE REQUIREMENTS OF MDOT 703.31.

7. EMBANKMENT FILL SLOPES – ALL FILL SLOPE FACES SHOULD BE CONSTRUCTED AS LEVEL BENCHES WHICH ARE OVERBUILT TO FACILITATE COMPACTION. THE FINAL SLOPE FACE SHOULD BE CONSTRUCTED BY CUTTING BACK INTO THE COMPACTED CORE.

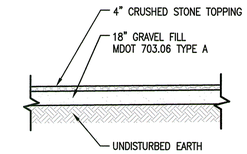

FLARE AREA SECTION

NOT TO SCALE

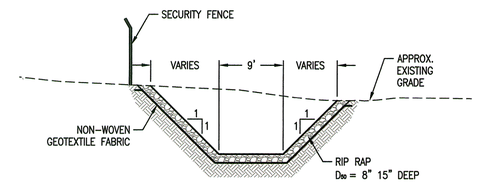

TYPICAL RELOCATED STREAM SECTION

NOT TO SCALE

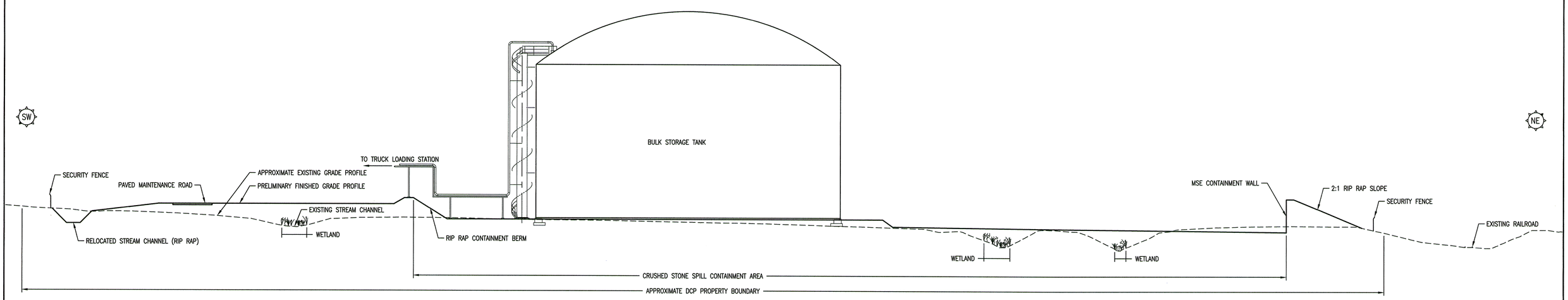

SECTION A-A

NOT TO SCALE

NOTES

1. SEE MATRIX SERVICE DRAWINGS 2004-01 & 2004-02 FOR ADDITIONAL CROSS SECTIONS.

ISSUED FOR PERMITTING
NOT FOR CONSTRUCTION

NO.	REVISION	DATE	BY	CK	P.E. STAMPED BY	P.E. No.

STATE OF MAINE
DANIEL T. BUTLER
No. 6796
LICENSED
PROFESSIONAL ENGINEER
6/13/11

CLIENT APPROVAL
APPROVED BY
COMPANY
DATE

PGT DESIGNED
CMH DRAWN
PMM CHECKED
DTB APPROVED
REVIEWED

CROSS SECTIONS & DETAILS
DCP SEARSPORT PROPANE TERMINAL

DCP MIDSTREAM PARTNERS, LLC
SEARSPORT MAINE

TRC
249 WESTERN AVENUE
AUGUSTA, ME 04330
PROJECT NO: 179023
SCALE: AS NOTED DATE: 05/12/11

179023-C3 SH. 1

REV. B

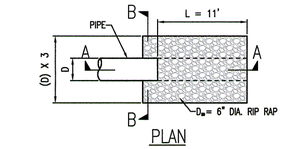

PLAN

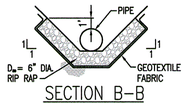

SECTION B–B

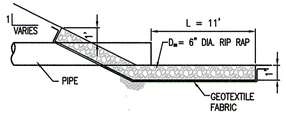

SECTION A–A

CULVERT INLET/OUTLET PROTECTION

NOT TO SCALE

CULVERT SCHEDULE					
ID	DIAMETER	TYPE	LENGTH	INVERT IN	INVERT OUT
C–1	12"	RCP	115'	70.00	67.00
C–2	15"	RCP	80'	64.00	63.00
C–3	15"	RCP	80'	63.50	63.00
C–4	12"	RCP	25'	44.00	43.00
C–5	18"	RCP	70'	32.50	32.00
C–6	24"	RCP	320'	60.50	50.00
C–7	15"	RCP	91'	60.50	51.00
C–8	15"	RCP	38'	57.50	57.00
C–9	15"	RCP	75'	29.50	50.00

TRENCH SCHEDULE	
ID	A (MIN.)
4"–12"	0'–10"
15"	0'–10"
18"	0'–10"
24"	0'–6"
30"	0'–6"
36"	0'–6"

NOTE: SHORE TRENCH EXCAVATION AS REQUIRED TO MINIMIZE EXCAVATION AND IMPACTS TO ADJACENT UTILITIES, STRUCTURES OR PAVEMENT. TRENCHES SHALL BE CONSTRUCTED IN ACCORDANCE WITH OSHA REQUIREMENTS.

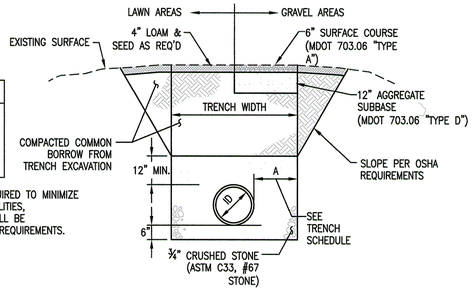

TYPICAL CULVERT TRENCH DETAIL

NOT TO SCALE

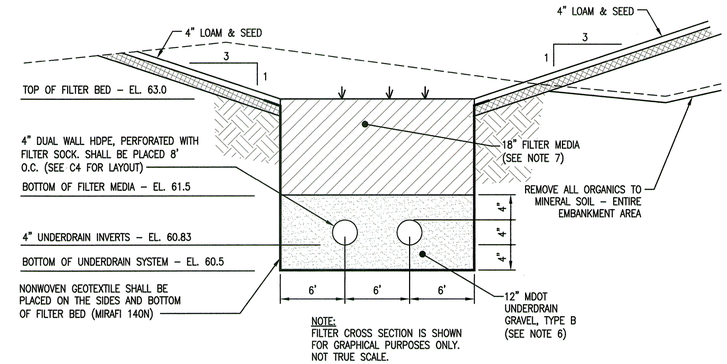

UNDERDRAIN SOIL FILTER WQ#1 CONSTRUCTION

NOT TO SCALE

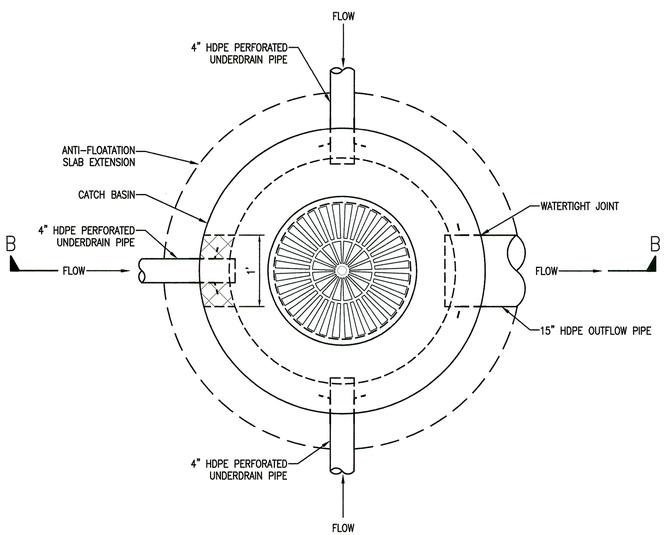

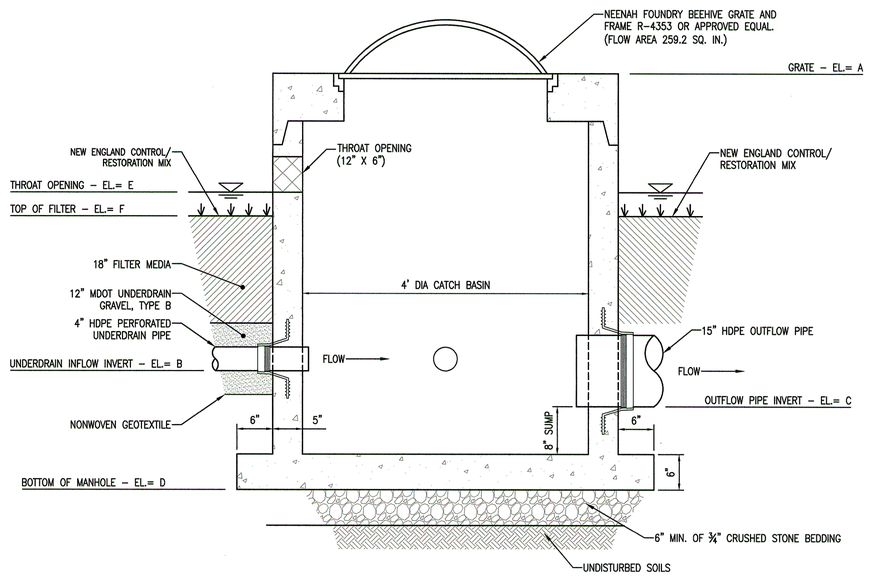

TYPICAL CATCH BASIN

NOT TO SCALE

CATCH BASIN ELEVATION TABLE						
CATCH BASIN	A	B	C	D	E	F
#1	65.50	60.83	60.50	59.33	64.00	63.00
#2	62.00	57.83	57.50	56.33	60.67	60.00
#3	33.50	29.83	29.50	28.33	32.92	32.00

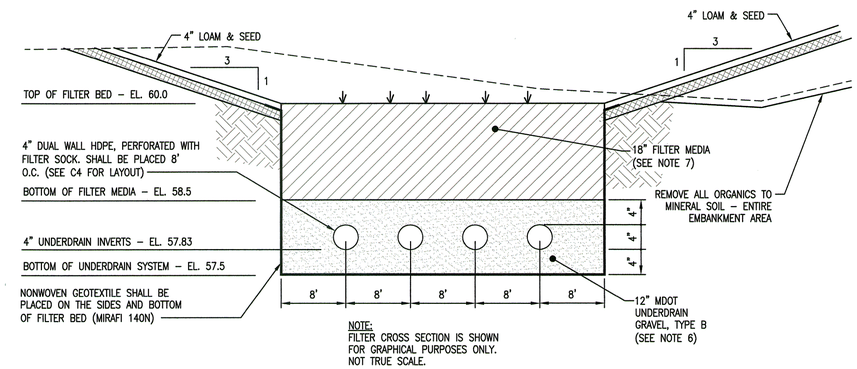

UNDERDRAIN SOIL FILTER WQ#2 CONSTRUCTION

NOT TO SCALE

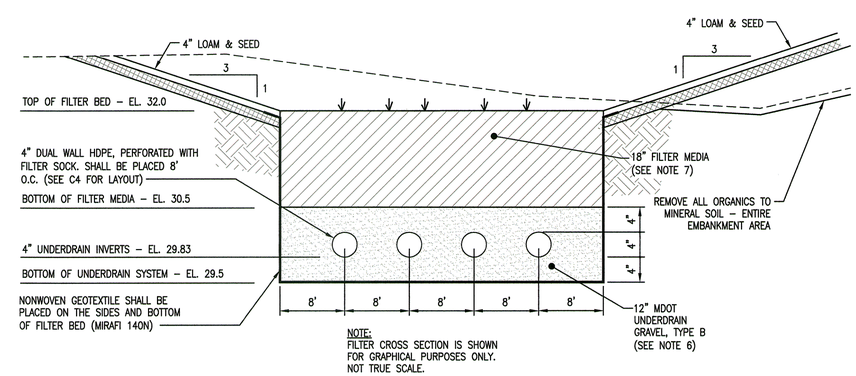

UNDERDRAIN SOIL FILTER WQ#3 CONSTRUCTION

NOT TO SCALE

NOTES

1. SEE MATRIX SERVICE DRAWINGS 2004–01 & 2004–02 FOR ADDITIONAL CROSS SECTIONS.

ISSUED FOR PERMITTING
NOT FOR CONSTRUCTION

NO.	REVISION	DATE	BY	CK	P.E. STAMPED BY	P.E. No.

STATE OF MAINE
DANIEL T. BUTLER
No. 5796
LICENSED
PROFESSIONAL ENGINEER
6/10/11

CLIENT APPROVAL
APPROVED BY
COMPANY
DATE

PGT DESIGNED
CMH DRAWN
PMM CHECKED
DTB APPROVED
REVIEWED

CROSS SECTIONS & DETAILS
DCP SEARSPORT PROPANE TERMINAL

DCP MIDSTREAM PARTNERS, LLC
SEARSPORT MAINE

TRC
249 WESTERN AVENUE
AUGUSTA, ME 04330
PROJECT NO: 179023
SCALE: AS NOTED DATE: 06/08/11

179023–C3 SH. 2

REV. A

CONSTRUCTION SEQUENCE

1. ESTABLISH CONSTRUCTION WORKSPACE LIMITS; IDENTIFY AND MARK SENSITIVE RESOURCES.

2. CLEAR TIMBER AND BRUSH; DO NOT GRUB UNTIL JUST PRIOR TO PRELIMINARY GRADING AND ESTABLISHMENT AND STABILIZATION OF TEMPORARY OR PERMANENT DRAINAGE COURSES.

3. INSTALL AND MAINTAIN SEDIMENT BARRIERS SUCH AS SILT FENCING AND/OR OTHER EROSION CONTROL BARRIERS ALONG THE DOWNHILL LIMIT OF WORK, AS SHOWN ON THE DRAWINGS. SEDIMENT BARRIER LOCATIONS MAY BE ADJUSTED IN THE FIELD BASED ON SITE CONDITIONS AS DETERMINED BY THE ENGINEERING INSPECTOR. WHERE SILT FENCE CANNOT BE TOED-IN PROPERLY DUE TO TREE ROOTS, ROCKS OR FROZEN GROUND, HAY BALES OR AN EROSION CONTROL MIX BERM MAY BE SUBSTITUTED. SILT FENCING WILL BE INSTALLED AFTER CLEARING BUT PRIOR TO GRUBBING AND GRADING ACTIVITIES. ANY EROSION ISSUES DEVELOPED DURING CLEARING WILL BE TEMPORARILY STABILIZED AS NECESSARY.

4. STABILIZE CONSTRUCTION ACCESS ROAD SURFACE, PARKING AREAS AND EQUIPMENT STORAGE AND LAYDOWN AREAS WITH MATTING, CRUSHED STONE OR GRAVEL SUBBASE AS NECESSARY TO MINIMIZE RUTTING AND AVOID PONDING.

5. CONCURRENT WITH INITIATION OF SITE GRADING, CONSTRUCT AND STABILIZE TEMPORARY DRAINAGE SWALES, DIVERSION BERMS, CHECK DAMS, AND CULVERTS WITH TEMPORARY INLET AND OUTLET STRUCTURES TO MINIMIZE SEDIMENT IN SITE RUNOFF DURING THE CONSTRUCTION OF THE ROADWAY. DEWATER IN ACCORDANCE WITH DEWATERING NOTES BELOW.

6. INSTALL PROPERLY SPACED STONE CHECK DAMS IN ANY SECTION OF DITCH WITHIN 24 HOURS OF FORMING, SHAPING OR ROUGH GRADING THAT SECTION OF DITCH.

7. MINIMIZE THE AMOUNT OF DISTURBANCE AT ANY ONE TIME BY STAGING CONSTRUCTION AS MUCH AS PRACTICAL FOR EFFICIENT CONSTRUCTION OF THE FACILITY. EXISTING GROUNDCOVER SHOULD BE LEFT IN PLACE WHERE FEASIBLE TO AID IN SEDIMENT RETENTION AND REDUCE EROSION POTENTIAL.

8. STABILIZE ANY NEWLY GRADED SLOPE GREATER THAN EIGHT PERCENT AND ANY SECTION OF NEWLY CONSTRUCTED DITCH USING ANCHORED EROSION CONTROL BLANKETS OR OTHER APPROVED MULCHING TECHNIQUES. STABILIZE ANY SLOPE EXCEEDING EIGHT PERCENT AND BROUGHT TO FINAL GRADE USING THE APPROVED PERMANENT STABILIZATION MEASURES FOR SLOPES. STABILIZE ANY SECTION OF DITCH BROUGHT TO FINAL GRADE USING THE APPROVED PERMANENT STABILIZATION MEASURES FOR DITCHES.

9. DUST CONTROL METHODS WILL BE EMPLOYED AFTER GRADING AND PRIOR TO FINAL STABILIZATION TO PREVENT THE BLOWING AND MOVEMENT OF DUST THROUGH THE APPLICATION OF WATER AND/OR CALCIUM CHLORIDE TO REDUCE WIND EROSION. REPETITIVE TREATMENT WILL BE APPLIED AS NEEDED TO ACCOMPLISH CONTROL.

10. APPLY TEMPORARY SEED AND/OR MULCH TO ANY EXPOSED AREAS WHERE ACTIVITY IS NOT ANTICIPATED FOR 30 DAYS OR MORE, OR WHERE ACTIVITY HAS NOT OCCURRED WITHIN 30 DAYS. TEMPORARILY MULCH ANY EXPOSED AREAS WITHIN 100 FEET OF A WETLAND WHERE ACTIVITY IS NOT ANTICIPATED OR HAS NOT OCCURRED IN 7 DAYS.

11. UNLESS CLEAR WATER IS PRESENT, DEWATERING OF EXCAVATIONS MUST BE DONE THROUGH A GEOTEXTILE-LINED SEDIMENT CONTAINMENT STRUCTURE OR THROUGH A FILTER BAG THAT DISCHARGES TO A VEGETATED AREAS. CONTROL AND DIRECT RUNOFF FROM THE EXCAVATED AREAS TO THE STABILIZED SITE DRAINAGE SYSTEM USING STABILIZED WATER BARS AND/OR HAY BALES. THE STRUCTURE OR FILTER BAG WILL BE SIZED APPROPRIATELY TO ACCOMODATE THE PUMPING RATE AND VOLUMES. SEDIMENT TRAPS WILL BE CLEANED OUT AND/OR REPLACED AS NEEDED TO PREVENT EXCEEDING THEIR CAPACITY AND EFFECTIVENESS.

12. REMOVE EXCESS SPOILS FROM SITE THAT WILL NOT BE USED FOR THE FINAL DESIGN AND STABILIZATION. STOCKPILED SOILS THAT REMAIN IN PLACE FOR 48 HOURS OR MORE WILL BE CONTAINED WITH SEDIMENT BARRIERS SUCH AS SILT FENCE, HAY BALES OR EQUIVALENT. THE SEDIMENT BARRIERS SHALL BE ADEQUATELY LOCATED AND REINFORCED TO HANDLE A SIGNIFICANT RAIN EVENT AND THE POTENTIAL SLUMPING OF THE PILE. BETWEEN APRIL 15 AND OCTOBER 1, APPLY TEMPORARY SEED AND MULCH TO A STOCKPILE THAT IS NOT EXPECTED TO BE DISTURBED WITHIN 30 DAYS. APPLY ANCHORED MULCH DAILY, AS NEEDED, DURING WINTER CONSTRUCTION.

13. INSPECT AND REPAIR EROSION CONTROL MEASURES WEEKLY IN AREAS OF ACTIVE CONSTRUCTION AND AFTER RAINFALL OF 1 INCH OR GREATER WITHIN A 24-HOUR PERIOD. REMOVE ACCUMULATED SEDIMENT WHEN IT REACHES 1/3 THE HEIGHT OF THE BARRIER.

14. MONITOR PUBLIC ROADS FOR SIGNS OF TRACKING OR SPILLING OF SPOIL MATERIAL AND CLEANUP AS NEEDED.

15. COMPLETE FINAL GRADING AND STABILIZATION OF EARTHEN STRUCTURES SUCH AS DIVERSION BERMS AND SWALES THAT WILL CONTROL RUNOFF.

16. FINISH GRADE AND REPLACE TOPSOIL OR LOAM IN DISTURBED AREAS. SEED AND MULCH DISTURBED AREAS WITHIN 2 WEEKS OF FINAL GRADING, WEATHER PERMITTING.

17. MAINTAIN ALL TEMPORARY EROSION CONTROLS AND SEDIMENT BARRIERS UNTIL VEGETATION HAS BEEN ESTABLISHED OVER 85-90% OF THE AREA TO BE REVEGETATED. RESEED SPARSELY VEGETATED AREAS.

18. REMOVE ALL TEMPORARY EROSION AND SEDIMENTATION CONTROL MEASURES ONCE THE SITE IS PERMANENTLY STABILIZED.

19. FOR ADDITIONAL DETAILS, CONSULT THE MAINE EROSION CONTROL AND SEDIMENT CONTROL HANDBOOK FOR CONSTRUCTION BEST MANAGEMENT PRACTICES (2003) AND MDEP WINTER CONSTRUCTION GUIDELINES (1999).

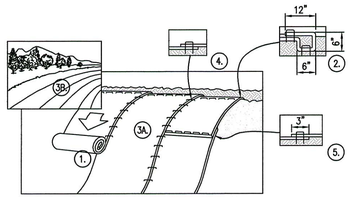

1. PREPARE SOIL BEFORE INSTALLING BLANKETS, INCLUDING ANY NECESSARY APPLICATION OF LIME, FERTILIZER, AND SEED. NOTE: WHEN USING CELL-O- SEED DO NOT SEED PREPARED AREA. CELL-O-SEED MUST BE INSTALLED WITH PAPER SIDE DOWN.

2. BEGIN AT THE TOP OF THE SLOPE BY ANCHORING THE BLANKET IN A 6" DEEP X 6" WIDE TRENCH WITH APPROXIMATELY 12" OF BLANKET EXTENDED BEYOND THE UP-SLOPE PORTION OF THE TRENCH. ANCHOR THE BLANKET WITH A ROW OF STAPLES/STAKES APPROXIMATELY 12" APART IN THE BOTTOM OF THE TRENCH. BACKFILL AND COMPACT THE TRENCH AFTER STAPLING. APPLY SEED TO COMPACTED SOIL AND FOLD REMAINING 12" PORTION OF BLANKET BACK OVER SEED AND COMPACTED SOIL. SECURE BLANKET OVER COMPACTED SOIL WITH A ROW OF STAPLES/STAKES SPACED APPROXIMATELY 12" APART ACROSS THE WIDTH OF THE BLANKET.

3. ROLL THE BLANKETS (A.) DOWN OR (B.) HORIZONTALLY ACROSS THE SLOPE. BLANKETS WILL UNROLL WITH APPROPRIATE SIDE AGAINST THE SOIL SURFACE. ALL BLANKETS MUST BE SECURELY FASTENED TO SOIL SURFACE BY PLACING STAPLES/STAKES IN APPROPRIATE LOCATIONS AS SHOWN IN THE STAPLE PATTERN GUIDE. WHEN USING OPTIONAL DOT SYSTEM, STAPLES/STAKES SHOULD BE PLACED THROUGH EACH OF THE COLORED DOTS CORRESPONDING TO THE APPROPRIATE STAPLE PATTERN.

4. THE EDGES OF PARALLEL BLANKETS MUST BE STAPLED WITH APPROXIMATELY 2"-5" OVERLAP DEPENDING ON BLANKET TYPE. TO ENSURE PROPER SEAM ALIGNMENT, PLACE THE EDGE OF THE OVERLAPPING BLANKET (BLANKET BEING INSTALLED ON TOP) EVEN WITH THE COLORED SEAM STITCH ON THE PREVIOUSLY INSTALLED BLANKET.

5. CONSECUTIVE BLANKETS SPLICED DOWN THE SLOPE MUST BE PLACED END OVER END (SHINGLE STYLE) WITH AN APPROXIMATE 3" OVERLAP. STAPLE THROUGH OVERLAPPED AREA, APPROXIMATELY 12" APART ACROSS ENTIRE BLANKET WIDTH.

NOTE:
*IN LOOSE SOIL CONDITIONS, THE USE OF STAPLE OR STAKE LENGTHS GREATER THAN 6" MAY BE NECESSARY TO PROPERLY SECURE THE BLANKETS.

EROSION CONTROL BLANKET INSTALLATION

NOT TO SCALE

MULCH AND SEEDING SPECIFICATIONS

SUMMARY OF TEMPORARY AND PERMANENT MULCH APPLICATION REQUIREMENTS

CONDITION	TIMING	MULCH TYPE[1,2]	APPLICATION RATES[3]
TEMPORARY			
WITHIN 100 FEET OF WETLANDS	IF NO ACTIVITY IN EXPOSED AREAS FOR 7 DAYS, OR PRIOR TO A STORM EVENT	STRAW MULCH OR ECM OR WOOD FIBER MULCH	2 TONS/ACRES 2000 LB./ACRES
ALL DISTRIBUTED AREAS OF THE CONSTRUCTION WORKSPACE	APPLY MULCH TO ALL EXPOSED AREAS IF NO ACTIVITY OCCURS WITHIN 30 DAYS. APPLY MULCH AND TEMPORARY SEEDING SOONER WHEN IT CAN BE ANTICIPATED THAT ACTIVITY IS NOT GOING TO OCCUR WITHIN 30 DAYS.	STRAW MULCH OR ECM OR WOOD FIBER MULCH	2 TONS/ACRES 2000 LB./ACRES [3]
ALL WORK AREAS EXPOSED ARE TO BE MULCHED DAILY EACH TIME SOIL IS DISTURBED	NOVEMBER 1 – APRIL 15	STRAW MULCH OR ECM OR WOOD FIBER MULCH	3 TONS/ACRES 2000 LB./ACRES
PERMANENT			
ON ALL EXPOSED AREAS AFTER SEEDING TO STABILIZE THE SOIL SURFACE	PERMANENT GRASS AND/OR LEGUME SEEDING COVERED BY HAY OR STRAW MULCH ON ALL AREAS THAT HAVE BEEN RESTORED TO FINAL GRADE. THIS DOES NOT APPLY TO AREAS STABILIZED BY OTHER MEANS SUCH AS JUTE MATTING OR PERMANENT EROSION CONTROL MIX.	CRIMPED STRAW MULCH OR PAPER MULCH OR WOOD FIBER MULCH	2 TONS/ACRES 1500 LB./ACRES[4] 2000 LB./ACRES
WOOD CHIP APPLICATION AREAS	PERMANENT GRASS AND/OR LEGUME SEEDING COVERED BY HAY OR STRAW MULCH ON ALL AREAS THAT HAVE BEEN RESTORED TO FINAL GRADE. THIS DOES NOT APPLY TO AREAS STABILIZED BY OTHER MEANS SUCH AS JUTE MATTING OR PERMANENT EROSION CONTROL MIX.	CRIMPED STRAW MULCH OR PAPER MULCH OR WOOD FIBER MULCH	2 TONS/ACRES 1500 LB./ACRES[4] 2000 LB./ACRES

NOTES:
1. STRAW AND HAY MULCH MAY BE USED INTERCHANGEABLY, EXCEPT IN WETLAND AREAS WHERE STRAW MULCH WILL BE REQUIRED.
2. DOUBLE RATE OF WOOD FIBER MULCH WHEN USED IN CRITICAL AREAS.
3. STRAW, HAY, OR HYDROMULCH (WOOD FIBER OR PAPER MULCH AS APPROPRIATE) WILL PROVIDE 90 PERCENT GROUND COVERAGE (SEE ECM APPLICATION RATES BELOW.
4. PAPER MULCH IS ACCEPTABLE FOR USE DURING THE GROWING SEASON. ON SLOPES >30 PERCENT AND IN AREAS WHERE VEGETATION HAS NOT ESTABLISHED WELL, ADDITIONAL HAY MULCH WILL BE ADDED AS A WINTERIZING MEASURE.

MULCH ANCHORING REQUIREMENTS

ON SLOPES GREATER THAN 8 PER CENT, HAY OR STRAW MULCH WILL BE FIRMLY ANCHORED INTO THE SOIL UTILIZING ONE OF THE FOLLOWING METHODS:
-CRIMPING WITH A STRAIGHT OR NOTCHED MULCH CRIMPING TOOL (FARM DISCS WILL NOT BE ALLOWED);
-TRACK WALKING WITH DEEP-CLEATED EQUIPMENT OPERATING UP AND DOWN THE SLOPE (MULCH CRIMPED PERPENDICULAR TO THE SLOPE) ON SLOPES <25 PERCENT;
-APPLICATION OF MULCH NETTING;
-APPLICATION OF 500 LB./ACRE OF WOOD FIBER MULCH OVER STRAW/HAY MULCH; AND
-COMMERCIALLY AVAILABLE TACKIFIERS (EXCEPT WITHIN 100 FEET OF WATERBODIES OR WETLANDS).

SEED MIX SPECIFICATIONS

SEED MIX NAME	SEED MIX COMPONENTS	LB./ACRE[1]
TEMPORARY SEED MIX	ANNUAL RYEGRASS	40
PERMANENT UPLAND SEED MIX	REDTOP CREEPING RED FESCUE TALL FESCUE BIRDSFOOT TREFOIL	4 40 40 16
WOODCHIP APPLICATION SEED MIX	CREEPING RED FESCUE REDTOP TALL FESCUE CROWNVETCH	20 4 30 30
WETLAND SEED MIX	ANNUAL RYEGRASS	40
SUPPLEMENTAL WINTER SEED MIX[2]	WINTER RYEGRASS	120

NOTES:
1. INCREASE SEEDING RATES 10% WHEN HYDROSEEDING
2. WINTER RYE WILL BE ADDED TO PERMANENT UPLAND MIX AT A RATE OF 120 LB./ACRE BETWEEN OCTOBER 1 AND APRIL 15

SUMMARY OF SEEDING REQUIREMENTS

CONDITION	TIMING[1,2]	SEED MIX
TEMPORARY SEEDING [3]	TEMPORARY SEED BETWEEN APRIL 15 AND OCTOBER 1 ONLY. DISTURBED AREAS OR SPOIL STOCKPILES WILL BE SEEDED IMMEDIATELY IF FURTHER DISTURBANCE IS NOT EXPECTED FOR 30 DAYS OR MORE.	ANNUAL RYEGRASS
PERMANENT SEEDING [3,4]		
UPLAND PORTIONS OF THE CONSTRUCTION AREA	DISTURBED AREA WILL BE SEEDED WITHIN 2 WEEKS OF FINAL GRADING.	PERMANENT UPLAND MIX
SLOPES > 3:1	DISTURBED AREA WILL BE SEEDED IMMEDIATELY AFTER SEEDBED PREPARATION.	PERMANENT UPLAND MIX
WETLANDS	DISTURBED WETLANDS WILL BE SEEDED WITHIN 6 DAYS OF FINAL GRADING.	ANNUAL RYEGRASS
WOODCHIP APPLICATION AREAS	DISTURBED AREA WILL BE SEEDED WITHIN 2 WEEKS OF FINAL GRADING.	WOODCHIP APPLICATION SEED MIX
WINTER DORMANT SEEDING	DORMANT SEED BETWEEN OCTOBER 1 AND APRIL 15 ONLY. NO SEEDING WILL OCCUR IF SNOW DEPTHS EXCEED 1 INCH.	PERMANENT UPLAND MIX PLUS WINTER RYEGRASS

NOTES:
1. WEATHER CONDITIONS PERMITTING.
2. AREAS THAT DO NOT SUCCESSFULLY REVEGETATE WITHIN APPROPRIATE PERIOD OF TIME WILL BE RESEEDED AS NECCESSARY.
3. LOOSEN COMPACTED SOIL TO A MINIMUM DEPTH OF 4 INCHES.
4. TOP DRESS WITH 6 INCHES LOAM, AS NEEDED.

FERTILIZER AND LIMESTONE REQUIREMENTS

IN GENERAL, FERTILIZER AND LIME APPLICATION RATES WILL, IF NEEDED, FOLLOW THE GUIDELINES IDENTIFIED BELOW UNLESS SITE SPECIFIC SOIL TESTS IDENTIFY THE NEED FOR ALTERNATIVE FERTILIZER/LIME APPLICATION RATES. FERTILIZER WILL BE APPLIED TO UPLAND AREAS PRIOR TO SEEDING AT A RATE OF 800 POUNDS PER ACRE USING 10-20-20 (N-P205-K20) OR EQUIVALENT. GROUND LIMESTONE (EQUIVALENT TO 50 PERCENT CALCIUM PLUS MAGNESIUM OXIDE) WILL BE APPLIED AT A RATE OF 3 TONS PER ACRE. AN EQUIVALENT MIXTURE OF FERTILIZER AND LIME MAY BE APPLIED USING THE HYDROSEEDING METHOD. NO LIME OR FERTILIZER WILL BE APPLIED TO WETLANDS.

ECM APPLICATION RATES

ECM CAN BE USED AS A SLOPE REINFORCEMENT OR MULCH ON SLOPES THAT ARE 2:1 OR LESS, ON FROZEN GROUND OR FORESTED AREAS, AND AT THE EDGE OF GRAVEL PARKING AREAS AND ACTIVE CONSTRUCTION AREAS. ECM USED AS MULCH IS APPLIED AT DIFFERENT THICKNESS DEPENDING ON THE SLOPE AND SLOPE LENGTH:

- FOR SLOPES OF 3:1 OR LESS, APPLY EROSION CONTROL MIX 2 INCHES THICK PLUS AN ADDITIONAL ½ INCH PER 20 FEET OF SLOPE UP THE 100 FEET (E.G. 3 INCHES THICK FOR 60 FEET OF SLOPE; 4 INCHES THICK FOR 100 FEET OF SLOPE).
- FOR SLOPES BETWEEN 3:1 AND 2:1, APPLY EROSION CONTROL MIX 4 INCHES THICK PLUS AN ADDITIONAL ½ INCH PER 20 FEET OF SLOPE UP TO 100 FEET (E.G. 5 INCHES THICK FOR 60 FEET OF SLOPE; 6 INCHES THICK FOR 100 FEET OF SLOPE).

WHEN THE ECM IS USED AS MULCH, IT MUST BE SPREAD EVENLY AND MUST PROVIDE 100 PERCENT SOIL COVERAGE. THE EROSION CONTROL MIX WILL NOT SUPPORT GRASS BUT WILL SUPPORT CLOVER AND OTHER LEGUMES AND WOODY VEGETATION. VEGETATION CAN BE PROMOTED BY SEEDING OR IT CAN BE LEFT TO OCCUR NATURALLY.

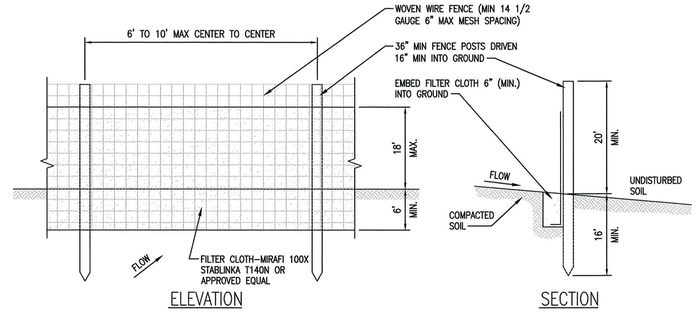

ELEVATION SECTION

1. WOVEN WIRE FENCE TO BE FASTENED TO FENCE POSTS WITH WIRE TIES OR STAPLES.
2. FILTER CLOTH TO BE FASTENED SECURELY TO WOVEN WIRE FENCE WITH TIES SPACED EVERY 24" AT TOP AND MIDSECTION.
3. WHEN TWO SECTIONS OF FILTER CLOTH ADJOIN EACH OTHER THEY SHALL BE OVERLAPPED BY 6" AND FOLDED.
4. MAINTENANCE SHALL BE PERFORMED AS NEEDED AND MATERIAL REMOVED WHEN BUILD-UP REACHES 1/3 THE HEIGHT OF THE FENCE.

POSTS:	STEEL "T" OR "U" TYPE OR 2" HARDWOOD.
FENCE:	WOVEN WIRE. 14 1/2 GA 6" MAX MESH OPENING.
FILTER CLOTH:	FILTER X, MIRAFI 100X. STABLINKA T140N OR APPROVED EQUAL.
PREFABRICATED UNIT:	ENVIROFENCE OR APPROVED EQUAL

SILT FENCE DETAILS

NOT TO SCALE

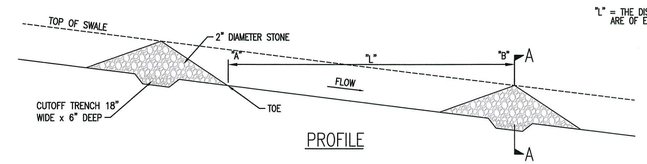

PROFILE

"L" = THE DISTANCE SUCH THAT POINTS "A" AND "B" ARE OF EQUAL ELEVATION

SLOPE (FT/FT)	LENGTH (FT/FT)
0.020	100
0.030	66
0.040	50
0.050	40
0.080	25
0.100	20
0.120	17
0.150	13

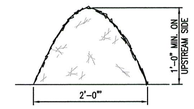

EROSION CONTROL SOIL/BARK MIX: SHALL CONSIST OF SHREDDED BARK, STUMP GRINDINGS, COMPOSTED BARK OR FLUME GRIT AND FRAGMENTED WOOD GENERATED FROM WATER-FLUME LOG HANDLING SYSTEMS. THE MIX SHALL CONFORM TO THE FOLLOWING:
1. pH – 5.0 TO 8.0.
2. SCREEN SIZE: 6" – 100% PASSING
   3/4" – 70% TO 85% PASSING
   MIX SHALL NOT CONTAIN LARGE PORTIONS OF SILTS, CLAYS OR FINE SANDS
3. ORGANIC MATERIAL 20% – 100% (DRY WEIGHT BASIS) ORGANIC PORTION MUST BE FIBROUS AND ELONGATED
4. SOLUBLE SALTS SHALL BE < 4.0 mmhos/cm

EROSION CONTROL BERM

NOT TO SCALE

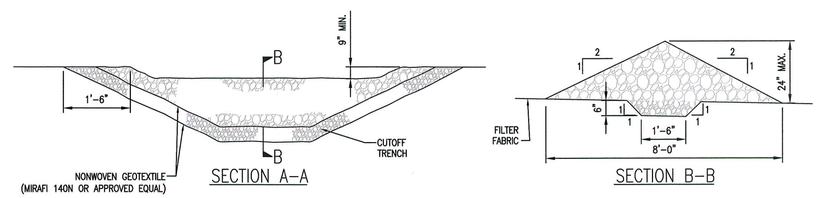

SECTION A-A SECTION B-B

NOTE: INSTALL WHERE INDICATED ON SITE GRADING PLAN AND AS NEEDED BY SPACING REQUIREMENTS.

CHECK DAM DETAILS

NOT TO SCALE

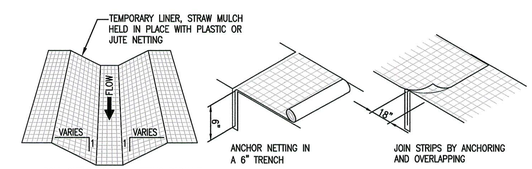

1. EXCAVATE THE CHANNEL AND SHAPE IT TO AN EVEN CROSS-SECTION AS SHOWN. WHEN STAKING INDICATE A 0.2' OVERCUT AROUND THE CHANNEL PERIMETER FOR SILTING AND BULKING.
2. GRADE SOIL AWAY FROM CHANNEL SO THAT SURFACE WATER MAY ENTER FREELY.
3. APPLY LIME, FERTILIZER AND SEED TO THE CHANNEL AND ADJOINING AREAS IN ACCORDANCE WITH THE EROSION CONTROL PLAN.
4. SPREAD HAY OR STRAW MULCH AT THE RATE OF 100LB/1000 SF.
5. HOLD MULCH IN PLACE IMMEDIATELY AFTER SPREADING WITH A PLASTIC NETTING INSTALLED AS SHOWN.
6. START LAYING THE NET FROM THE TOP OF THE UPSTREAM END OF THE CHANNEL AND UNROLL IT DOWN GRADE. DO NOT STRETCH THE NETTING.
7. BURY THE UP SLOPE END AND STAPLE THE NET EVERY 12" ACROSS THE TOP END, EVERY 3 FT AROUND THE EDGES AND ACROSS THE NET SO THAT THE STRAW IS HELD CLOSELY AGAINST THE SOIL. HOWEVER, DO NOT STRETCH THE NETTING WHEN STAPLING.
8. NETTING STRIPS SHOULD BE JOINED TOGETHER ALONG THE SIDES WITH A 3" OVERLAP AND STAPLED TOGETHER.
9. TO JOIN ENDS OF STRIPS, INSERT A NEW ROLL OF NET IN A TRENCH AS WITH THE UP SLOPE END AND OVERLAP IT 18" WITH THE PREVIOUSLY LAID UPPER ROLL. TURN UNDER 6" OF THE 18" OVERLAP AND STAPLE EVERY 12" ACROSS THE END.

GRASS LINED CHANNEL

NOT TO SCALE

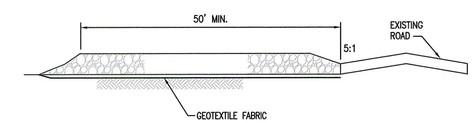

1. STONE SIZE – USE 2" STONE.
2. LENGTH – NOT LESS THAN 50 FEET.
3. THICKNESS – NOT LESS THAN SIX (6) INCHES.
4. WIDTH – TWELVE (12) FOOT MIN. BUT NOT LESS THAN THE FULL WIDTH AT POINTS WHERE INGRESS OR EGRESS OCCURS. TWENTY-FOUR (24) FOOT IF SINGLE ENTRANCE TO SITE.
5. GEOTEXTILE FABRIC – WILL BE PLACED OVER THE ENTIRE AREA PRIOR TO PLACING THE STONE.
6. SURFACE WATER – ALL SURFACE WATER FLOWING OR DIVERTED TOWARD CONSTRUCTION ENTRANCES SHALL BE PIPED ACROSS THE ENTRANCE. IF PIPING IS IMPRACTICAL, A MOUNTABLE BERM WITH 5:1 SLOPES WILL BE PERMITTED.
7. MAINTENANCE – THE ENTRANCE SHALL BE MAINTAINED IN A CONDITION WHICH WILL PREVENT TRACKING OR FLOWING OF SEDIMENT ONTO PUBLIC RIGHTS-OF-WAY. ALL SEDIMENT SPILLED, DROPPED, WASHED OR TRACKED ONTO PUBLIC RIGHTS-OF-WAY MUST BE REMOVED IMMEDIATELY.
8. WHEN WASHING IS REQUIRED, IT SHALL BE DONE ON AN AREA STABILIZED WITH STONE THAT DRAINS INTO AN APPROVED SEDIMENT TRAPPING DEVICE.

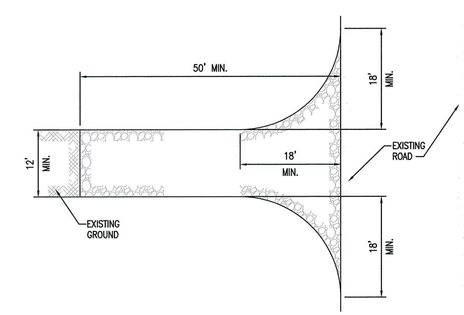

STABILIZED CONSTRUCTION ENTRANCE

NOT TO SCALE

ISSUED FOR PERMITTING
NOT FOR CONSTRUCTION

NO.	REVISION	DATE	BY	CK	P.E. STAMPED BY	P.E. No.

STATE OF MAINE
DANIEL T. BUTLER
No. 6796
LICENSED
PROFESSIONAL ENGINEER
5/16/11

CLIENT APPROVAL
APPROVED BY
COMPANY
DATE

PGT DESIGNED
CMH DRAWN
PMM CHECKED
DTB APPROVED
REVIEWED

EROSION CONTROL NOTES & DETAILS
DCP SEARSPORT PROPANE TERMINAL

DCP MIDSTREAM PARTNERS, LLC
SEARSPORT MAINE

TRC 249 WESTERN AVENUE AUGUSTA, ME 04330
PROJECT NO: 179023
SCALE: AS NOTED DATE: 05/12/11

179023-C4

REV. A