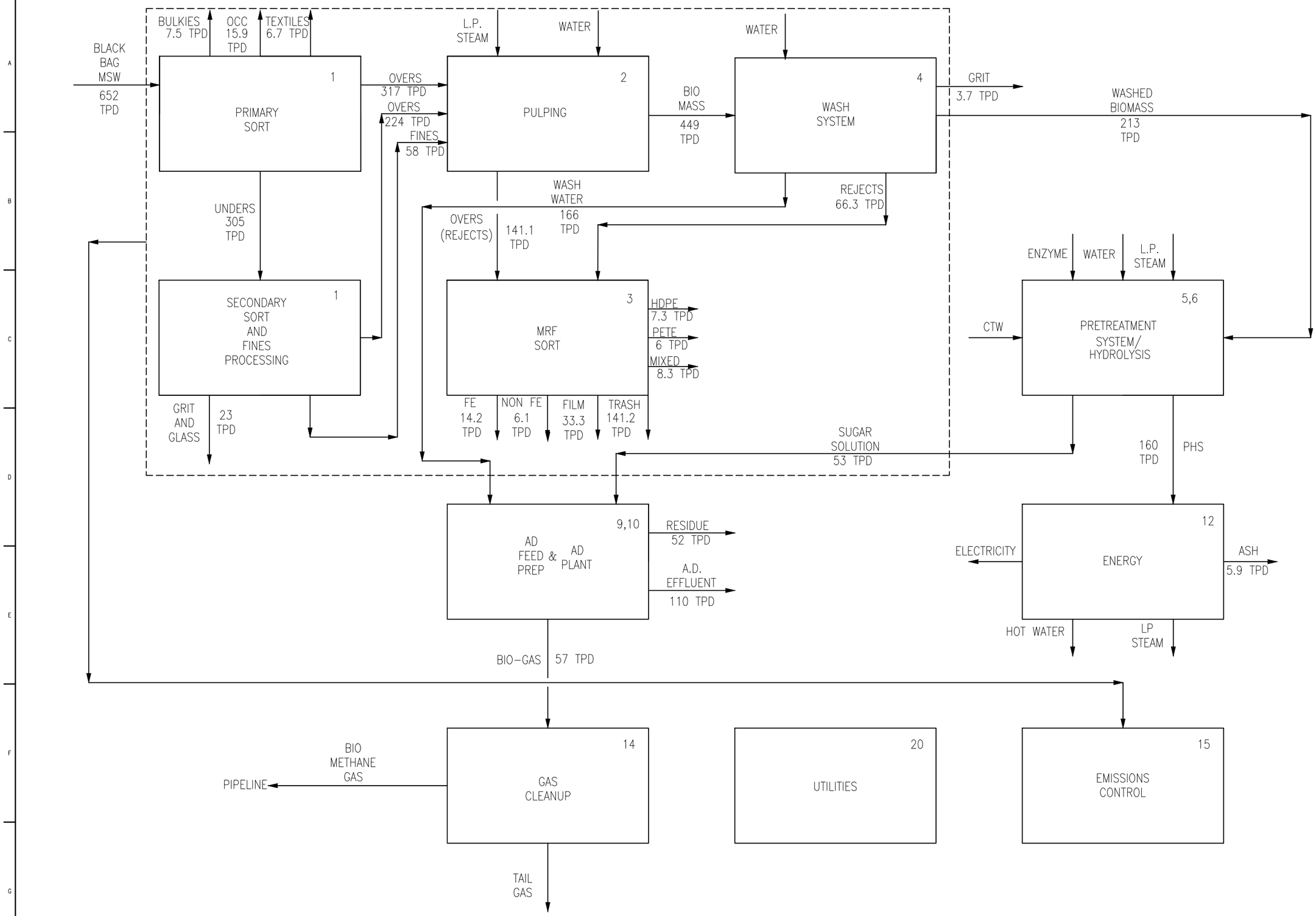

Fiberight LLC
PO Box 21171 Catonsville, MD 21228
www.Fiberight.com

REV	DATE	DESCRIPTION	DRAWN	REVIEW	APPR	APPR
A		ISSUED FOR REVIEW	ST			

PROJECT NO:

DESIGNED BY: Fiberight
DRAWN BY: Andy Gotsch
REVIEWED BY:

PLOT SCALE: 1:1
PLOT DATE: 11DEC15

BLOCK DIAGRAM

AS RECEIVED MASS BALANCE

MAINE

FILE NAME: C:\Users\Fiberight\Desktop\Work Package\Marion, Iowa\Block Diagram 15-7-28.dwg

© 2010 APS