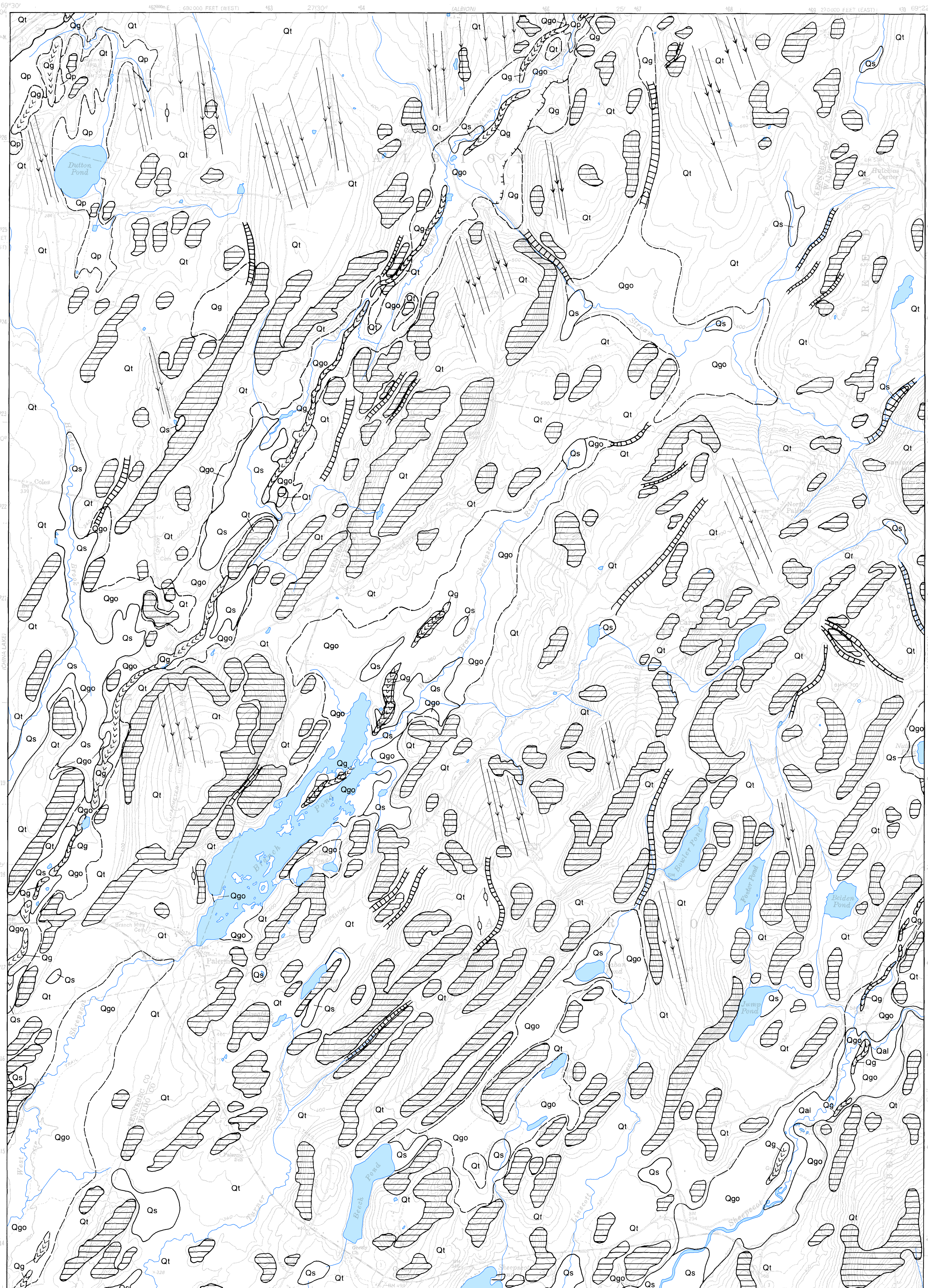

SYMBOL	GEOLOGIC UNIT	MATERIALS (Listed in decreasing order of abundance)	TOPOGRAPHY	ORIGIN
Qal	Stream alluvium (flood-plain and stream-terrace deposits)	Sand, gravel, and silt. Low to high permeability. Poor to good drainage. Permeability and drainage generally are better in stream-terrace deposits than in modern flood-plain sediments.	Flat to gently sloping.	Deposited on flood plains and stream beds by postglacial streams. Unit may also include minor alluvial fan deposits at mouths of valleys.
Qs	Swamp and tidal-marsh deposits	Peat, silt, clay, and sand. Poor drainage.	Flat.	Formed by accumulation of sediments and organic material in depressions and other poorly drained areas.
Qbd	Beach and dune deposits	Sand and gravel. High permeability. Materials are well drained, but water table is close to surface.	Low ridges and mounds, or sloping surface.	Occurs along modern ocean and lake shores. Includes beach sediments formed by wave and current action, and windblown sand derived from these deposits.
Qe	Eolian deposits	Sand. Moderate to high permeability. Good drainage.	Dune ridges and mounds, or blanket deposit that conforms to surface of underlying unit.	Windblown sand. Derived from wind erosion of glacial sediments and deposited in late-glacial to postglacial time.
Qta	Talus deposits	Large, angular rock fragments.	Steeply sloping rock piles at the bottoms of cliffs.	Formed by the accumulation of rock fragments that break loose from a cliff and fall to the slope below.
Ql	Glacial-lake bottom deposits	Silt, clay, and sand, commonly as thin, interstratified layers of various particle sizes. Low to moderate permeability. Poor to fair drainage.	Flat to gently sloping except where dissected by modern streams.	Composed largely of sediments that washed out of glacial ice and accumulated on the floors of glacial lakes. Map unit may also include a few non-glacial lake bottom deposits.
Qbl	Glacial-lake beach deposits	Gravel and sand. Typically thin and of limited extent. High permeability. Good drainage.	Low ridges or sloping surface. May be associated with wave-cut benches on hillsides.	Formed by wave erosion of till or other materials along shores of glacial lakes. Lakes have since lowered or drained.
Qps Qp	Glacial-marine deposits (Presumpscot Formation)	Silt, clay, and sand. Commonly a clayey silt, but sand is very abundant at the surface in some places. Locally fossiliferous. Map unit includes small areas of till, sand, and gravel that are not completely covered by marine sediment. Qps: Mostly sand, but may be underlain by silt and clay. Moderate to high permeability. Fair to good drainage. Qp : Mostly silt and clay. Low permeability. Poor drainage.	Flat to gently sloping except where dissected by modern streams. Commonly has a branching network of steep-walled stream gullies.	Composed of sediments that washed out of the Late Wisconsinan glacier and accumulated on the ocean floor. Formed during late-glacial time, when relative sea level was higher than at present.
Qbm	Emerged marine-beach deposits	Gravel and sand. High permeability. Good drainage. Typically thin and of limited extent.	Low ridges or sloping surface. May be associated with wave-cut benches on hillsides.	Formed by wave erosion of till or other materials during late-glacial time, when relative sea level was higher than at present.
Qgo Qg	Glacial-stream deposits	Sand and gravel. May include minor till. Commonly overlapped or entirely buried by glacial-marine deposits in the coastal lowland. Qgo: High permeability. Good drainage. Qg: Moderate to high permeability. Good drainage.	Qgo: Flat (outwash deposits). Qg: Flat-topped landforms, bounded in part by steep sides (kame terraces and kame deltas); hummocky terrain with hills (kames) and depressions (kettles); or ridges (eskers). Letters indicate good examples of particular landforms: d delta k kame kt kame terrace	Deposited by meltwater streams and currents during melting of the Late Wisconsinan glacier. Qgo: Outwash plains and outwash deltas. Deposited beyond the ice margin. Qg: Kames, eskers, and marine or glacial-lake deltas—all formed adjacent to glacial ice (ice-contact deposits).
Qmg Qmh Qmt Qm	End-moraine deposits	Till and/or sand and gravel. Commonly overlain by glacial-marine deposits in coastal areas. Permeability and drainage are highly variable, even over short distances in a single moraine. Qmg: Composed mostly of sand and gravel. Qmh: Composed of till, sand, and gravel. Qmt:-Composed mostly of till. Qm: Composition not specified.	Ridges. Commonly arcuate, discontinuous, and in groups. Size range: 3-75 ft. high, 20-1,000 ft. wide, and 100 ft. to several miles long. Qmh: Hummocky topography.	Deposited in marginal zone of the Late Wisconsinan glacier, by glacial ice (till) and/or meltwater streams emerging from the ice (sand and gravel).
Qt	Till	Heterogeneous mixture of sand, silt, clay, and stones. Stratification is rare. Includes two varieties: basal till and ablation till. Basal till is fine grained and very compact, with low permeability and poor drainage. Ablation till is loose, sandy, and stony, with moderate permeability and fair to good drainage. Unit generally overlies bedrock, but may overlie or include sand and gravel.	Commonly a blanket deposit that conforms to bedrock surface. Also forms glacially streamlined hills (including drumlins), where till thickness locally exceeds 100 feet.	Deposited directly by glacial ice.

SYMBOL		
rk	Bedrock outcrops	Dots show locations of individual outcrops. Ruled pattern indicates areas of many outcrops and/or thin surficial deposits (generally less than 10 ft. thick). Symbol "rk" indicates areas of barren ledge. Outcrops mapped largely by interpretation of aerial photography in off-road areas.
af	Artificial fill	Composed of till, sand and gravel, rock or various man-made materials (mainly trash in large dumps and landfills).
	Contact	Boundary between adjacent map units. Dashed where inferred.
	Scarp	Separates stream terrace from modern flood plain and adjacent terraces from each other. Hachures on downslope side.
	Drumlin	Glacially streamlined hill that has been elongated in direction of ice movement. Symbol shows direction of long axis. Generally composed of till and/or bedrock (rarely sand and gravel). Till is very thick in parts of many drumlins.
	Glacial striation locality	Point of observation at tip of arrow. Arrow indicates ice-movement direction as inferred from striations (scratches on bedrock caused by glacial abrasion).
	Crescentic mark locality	Point of observation at tip of arrow. Arrow indicates ice-movement direction as inferred from crescentic marks on bedrock surface.
	Grooved till surface	Symbols show lengths and directions of narrow ridges carved in till by flow of glacial ice.
	Area of many large boulders	
c	Cirque	A steep-walled, half-bowl shaped basin. Formed by glacial erosion in high mountainous areas of Maine.
	End moraine	Ridge of till or sand and gravel deposited at margin of glacier. Barbs point in direction of ice movement. Symbol is used in part to indicate moraines that are mostly buried by water-laid glacial sediment, as well as moraines that are too narrow to be outlined by a contact line at the scale of the map.
290	Dip direction of delta foreset beds	Number is approximate altitude in feet of contact between topset and foreset beds, which marks former position of sea level or glacial lake level (generally sea level in coastal Maine). Point of observation at tip of arrow.
	Dip direction of cross bedding in glacial-stream deposits	Indicates direction of flow of glacial meltwater streams.
>>>>	Crest of esker	Shows trend of sand and gravel ridge that was deposited in meltwater tunnel beneath glacier. Chevrons point in direction of meltwater flow.
	Kettle	Depression created by melting of large mass of buried glacial ice and collapse of overlying sediments.
m	Meltwater channel	Channel eroded by glacial meltwater stream. Arrow indicates known or probable direction of stream flow.
	Meltwater channel	Flow direction not specified.
c,s active st,s / p–b inactive unchecked	Till or sand and gravel pit	Letter symbols indicate materials exposed in pit: t till t_a loose, sandy ablation till t_b compact, fine-grained basal till f flowtill cy clay st silt s sand ps pebbly to cobbly sand p pebble gravel c cobble gravel b boulder gravel g gravel, undifferentiated rk bedrock rs rottenstone (decomposed bedrock) Superposed symbols indicate superposition of materials. Read hyphen as "to."
active or unchecked inactive	Bedrock quarry	
SI–3041	Source of dated sample	Symbols show collection site and laboratory sample number of ^{14}C-dated shells, wood, or other organic material.

RECONNAISSANCE

SURFICIAL GEOLOGY OF THE PALERMO QUADRANGLE, MAINE

OPEN-FILE NO. 86-5

BY

GEOFFREY W. SMITH

Maine Geological Survey
DEPARTMENT OF CONSERVATION
Augusta, Maine 04333
Walter A. Anderson, State Geologist
1986

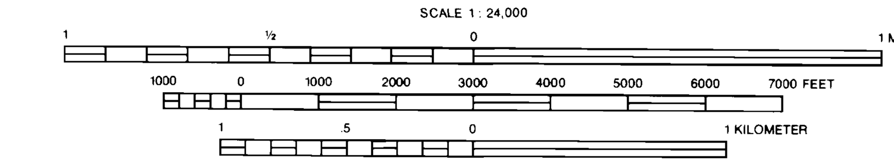

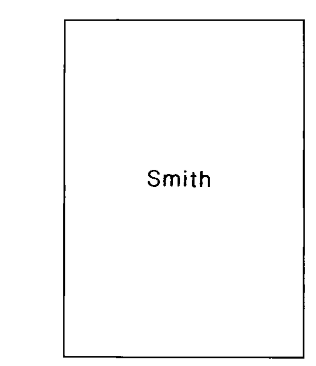

SOURCE MAP

For more detailed information refer to the "Surficial Geology Handbook for Coastal Maine" by W.B. Thompson, 1979.

CORRELATION OF MAP UNITS

This correlation chart shows the general age relationships of surficial deposits. There may be considerable overlap in the ages of certain deposits in any particular area.

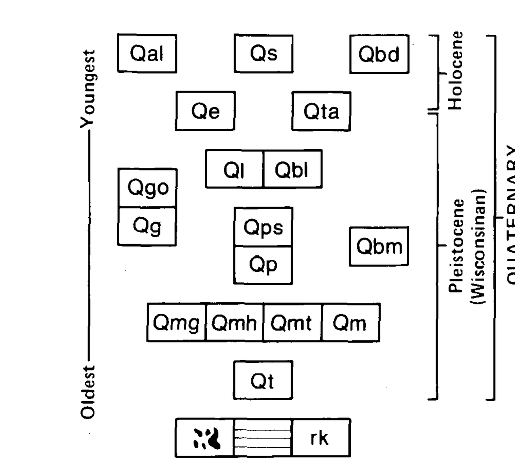

SEQUENCE OF GLACIAL RECESSION AND DEPOSITION OF SURFICIAL MATERIALS IN SOUTHERN MAINE

11,000 years ago: Glacier had disappeared from central and southern Maine. Uplift of land had caused sea to retreat.

13,000 years ago: Glacier was receding rapidly and much of southern Maine was ice-free. Land was still depressed from weight of ice, resulting in extensive marine submergence of lowland areas.

13,500 years ago: Continental glacier covered most of Maine, but was receding from the coastal lowland. Sea was in contact with ice margin.

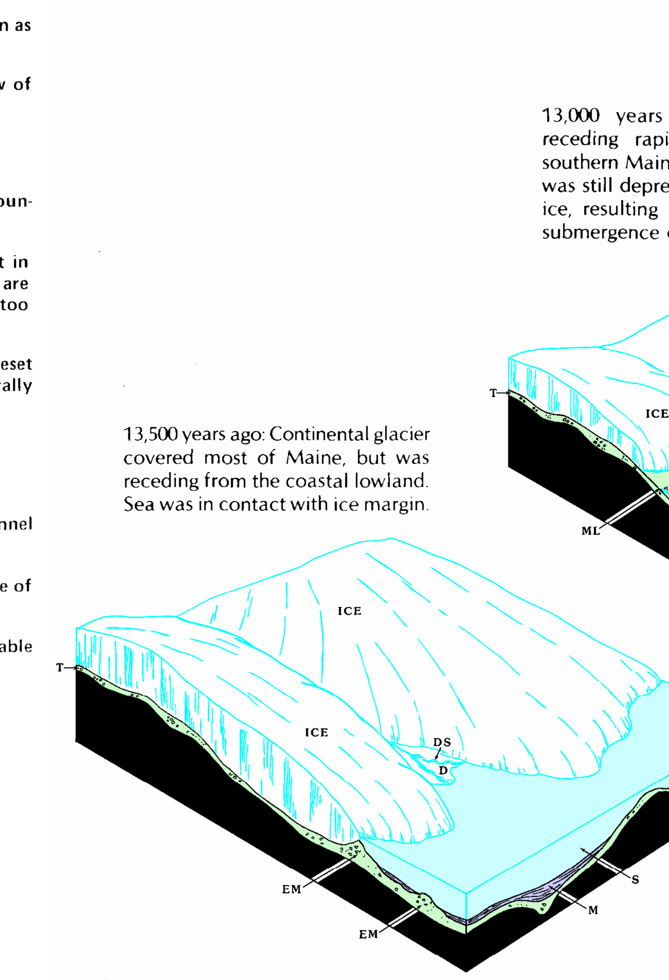

BEM — Buried end moraine
BR — Bedrock ridge
D — Delta
DR — Drumlins
DS — Distributary stream
E — Esker
EM — End moraine
IB — Ice block
K — Kettle
M — Marine sediments
ML — Marine limit
OP — Outwash plain
S — Seawater
T — Till

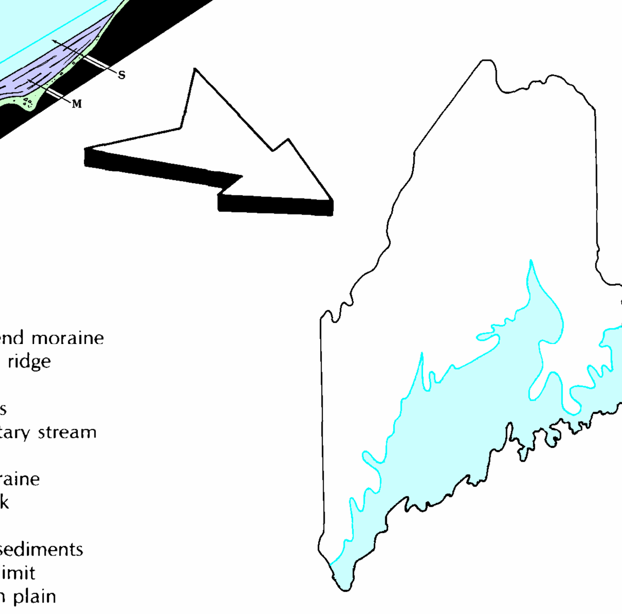

MARINE LIMIT: Shows region of Maine covered by sea water during period of maximum inundation about 13,000 years ago.

Text by W.B. Thompson. Graphics by R.D. Tucker.