ADDENDA

ADDENDUM NUMBER 3

DATE: March 18, 2016
PROJECT: Downeast/Sunrise Trail Extension

PROJECT NUMBER: 07034

OWNER: State of Maine: Department of Transportation

MANAGER: Maine Department of Agriculture, Conservation and Forestry

ENGINEER: Plymouth Engineering, Inc.

TO: All Plan Holders

This Addendum forms a part of the Contract Documents and modifies the Bidding Documents dated March 1, 2016, Addendum #1 dated March 16, 2016 and Addendum #2 dated March 17, 2016, with amendments and additions noted below.

Acknowledge receipt of this Addendum in the space provided in the Bid Form. Failure to do so may disqualify the Bidder.

This Addendum consists of one (1) page and is in the form of additions by the Engineer.

1. Drawing S2 is amended as follows. Detail 5/S2 has been revised to indicate the attachment of the wood framing to the steel beams.
2. Where treated wood interfaces with the bridge steel beams, two layers of roof underlayment cemented together or a self-adhering polymer-modified bitumen sheet shall be installed.

END OF DOCUMENT

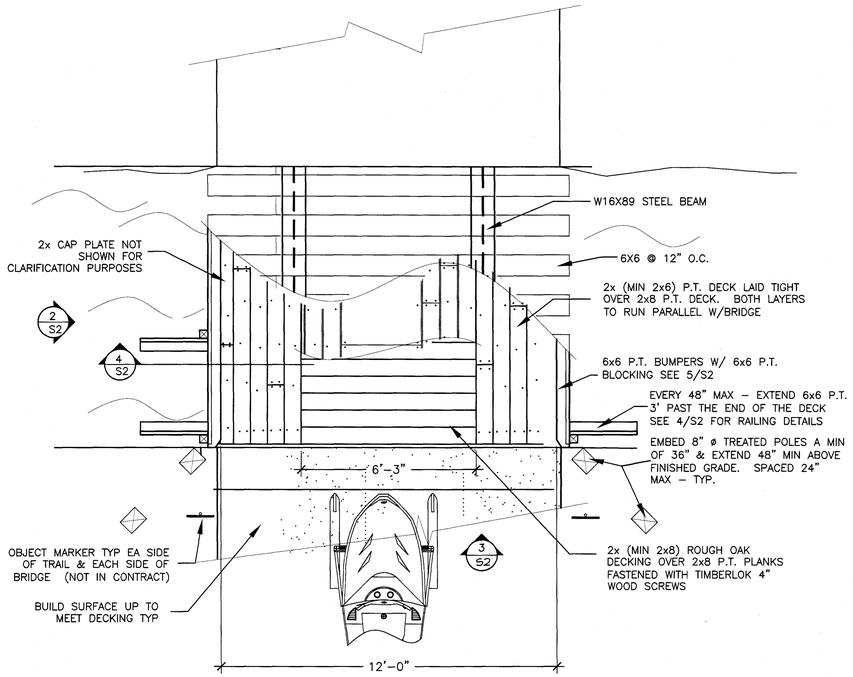

BRIDGE DECK (1 / S2)

SCALE: NTS

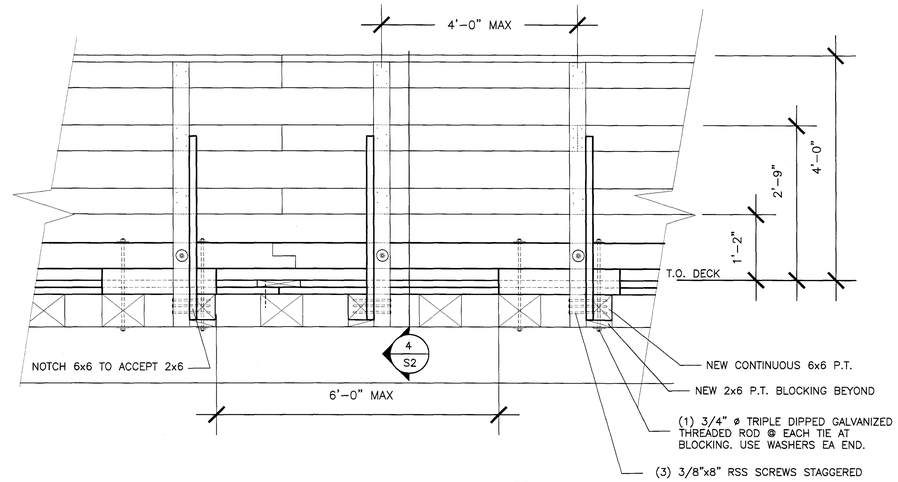

RAILING ELEVATION W/OUTRIGGER (2 / S2)

SCALE: NTS

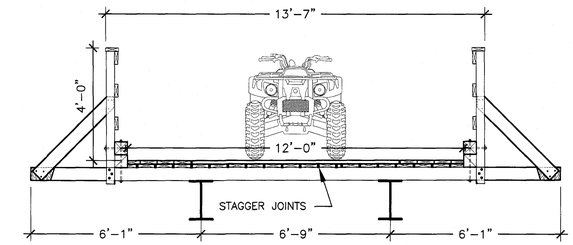

BRIDGE DECK SECTION (3 / S2)

SCALE: NTS

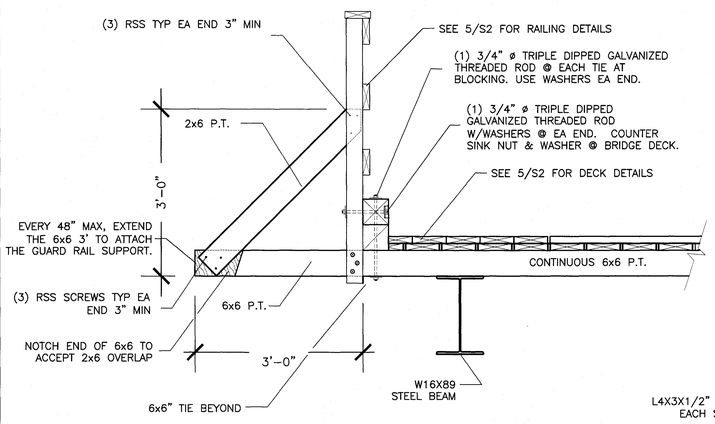

OUTRIGGER & POST DETAIL (4 / S2)

SCALE: NTS

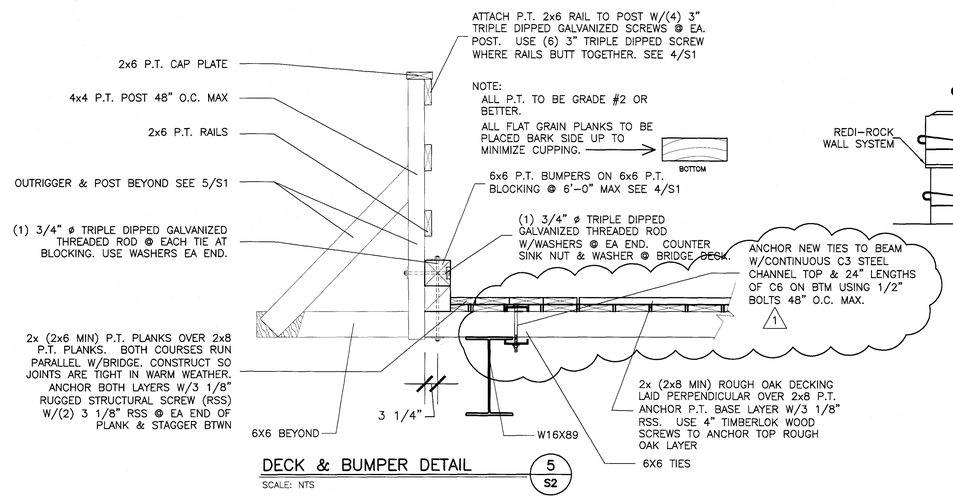

DECK & BUMPER DETAIL (5 / S2)

SCALE: NTS

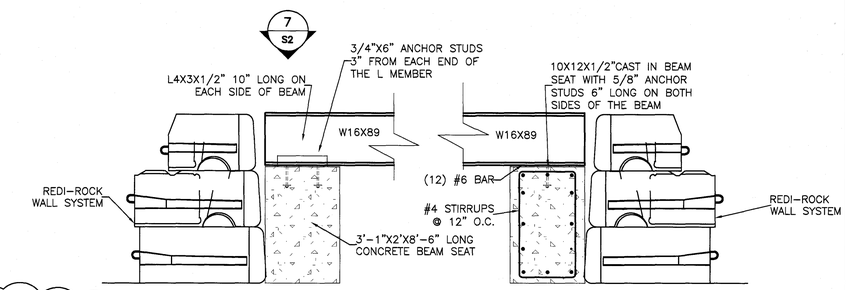

BEAM SEAT DETAIL (6 / S2)

SCALE: NTS

NOTE: STEEL MEMBERS SHAL BE MADE FROM ASTM A588 STEEL

1

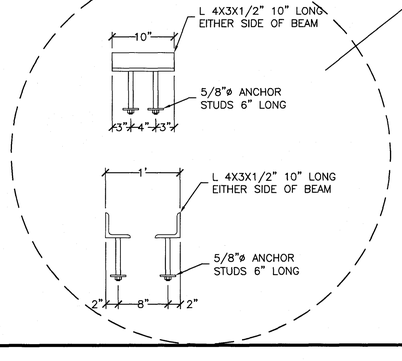

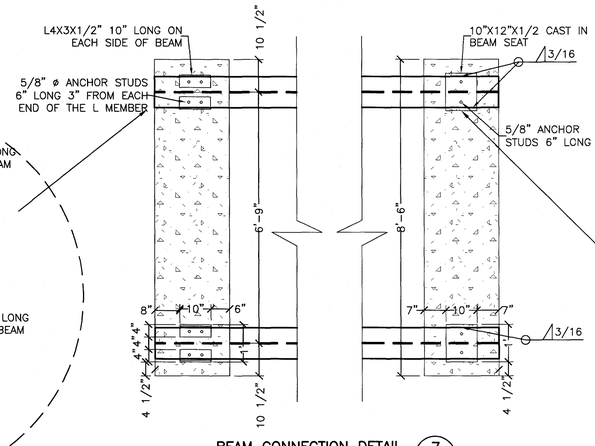

BEAM CONNECTION DETAIL (7 / S2)

SCALE: NTS

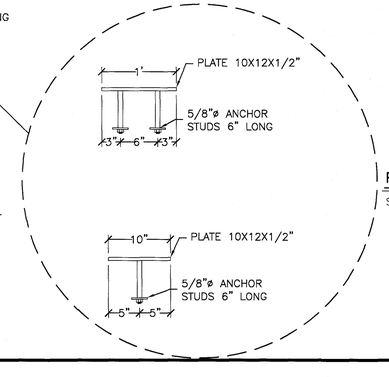

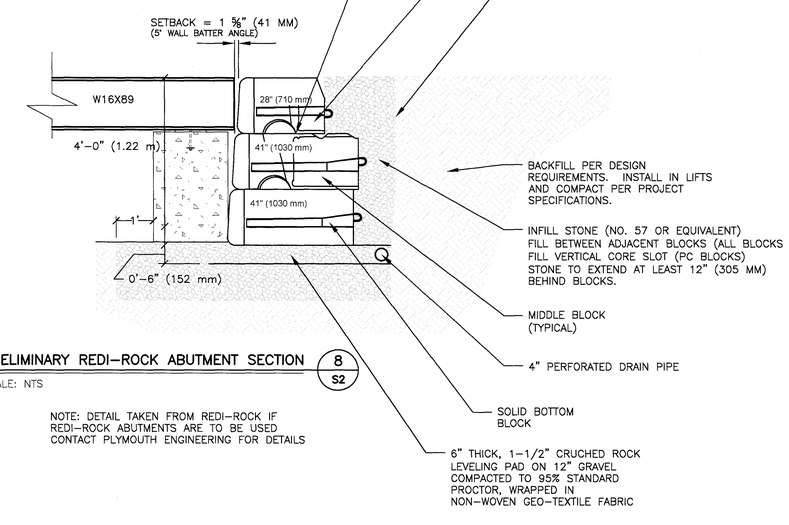

PRELIMINARY REDI–ROCK ABUTMENT SECTION (8 / S2)

SCALE: NTS

NOTE: DETAIL TAKEN FROM REDI–ROCK IF REDI–ROCK ABUTMENTS ARE TO BE USED CONTACT PLYMOUTH ENGINEERING FOR DETAILS

REVISIONS

NO.	DATE	DESCRIPTION	DRAWN	APPD.
1	3/18/16	CHANNEL ANCHOR	NEH	KGE

PROJECT NAME: Downeast/Sunrise Trail Extension
Calais Branch-Maine Central Railroad
Ellsworth-Hancock Maine

SHEET NAME: BRIDGE DETAILS

PROJECT NO. 14204
DRAWING NO. 14204Base5.dwg
FIELDBOOK: N/A
SCALE: AS SHOWN
DATE ISSUED: March 1, 2016

DESIGNED: Client
DRAWN: NEH
CHECKED: KGE
APPROVED: KGE
PLAN DATE: March 1, 2016

CLIENT: Parks and Public Lands
Department of Agriculture, Conservation and Forestry
18 Elkins Lane
Augusta, Maine 04333

Plymouth Engineering, Inc.
P.O. Box 46 30 Lower Detroit Road
Plymouth, Maine 04969
Tel: (207) 257-2071 Fax: (207) 257-2130
info@plymouthengineering.com
www.plymouthengineering.com

STATE OF MAINE KEITH G. EWING No. 12315 LICENSED PROFESSIONAL ENGINEER

SHEET 39 OF 39

S2

J:\2014\14204 – Downeast-Sunrise Trail Extention – Ellsworth – Bureau of Parks & Lands\U. Drawings\BUILDING\14204-S.dwg