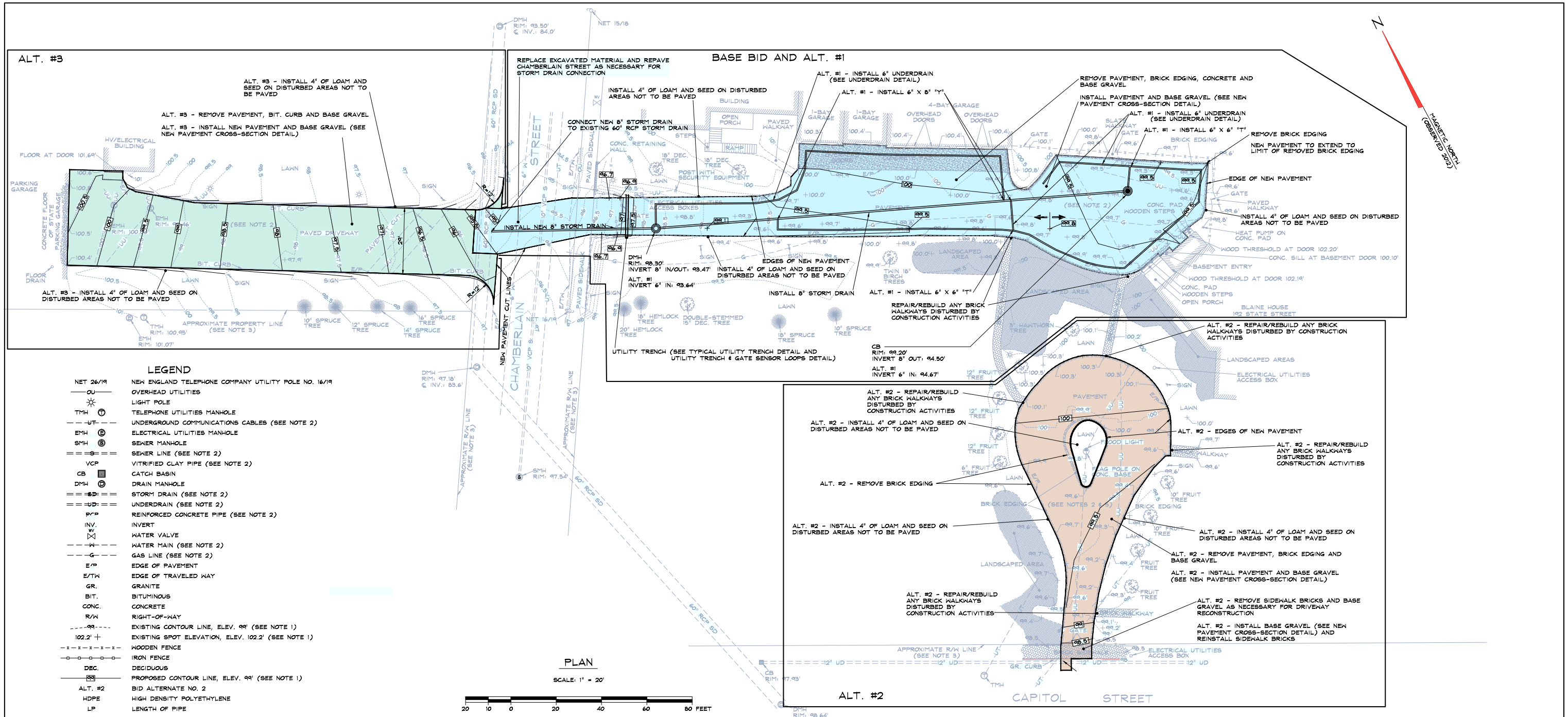

LEGEND

NET 26/19	NEW ENGLAND TELEPHONE COMPANY UTILITY POLE NO. 16/19
—OU—	OVERHEAD UTILITIES
☼	LIGHT POLE
TMH Ⓣ	TELEPHONE UTILITIES MANHOLE
— — —UT— — —	UNDERGROUND COMMUNICATIONS CABLES (SEE NOTE 2)
EMH Ⓔ	ELECTRICAL UTILITIES MANHOLE
SMH Ⓢ	SEWER MANHOLE
= = =S= = =	SEWER LINE (SEE NOTE 2)
VCP	VITRIFIED CLAY PIPE (SEE NOTE 2)
CB ▣	CATCH BASIN
DMH Ⓓ	DRAIN MANHOLE
= = =SD= = =	STORM DRAIN (SEE NOTE 2)
= = =UD= = =	UNDERDRAIN (SEE NOTE 2)
R/CP	REINFORCED CONCRETE PIPE (SEE NOTE 2)
INV.	INVERT
WV ⋈	WATER VALVE
— — —W— — —	WATER MAIN (SEE NOTE 2)
— — —G— — —	GAS LINE (SEE NOTE 2)
E/P	EDGE OF PAVEMENT
E/TW	EDGE OF TRAVELED WAY
GR.	GRANITE
BIT.	BITUMINOUS
CONC.	CONCRETE
R/W	RIGHT-OF-WAY
- - -99- - -	EXISTING CONTOUR LINE, ELEV. 99' (SEE NOTE 1)
102.2' +	EXISTING SPOT ELEVATION, ELEV. 102.2' (SEE NOTE 1)
— x — x — x — x —	WOODEN FENCE
—o—o—o—o—o—	IRON FENCE
DEC.	DECIDUOUS
99	PROPOSED CONTOUR LINE, ELEV. 99' (SEE NOTE 1)
ALT. #2	BID ALTERNATE NO. 2
HDPE	HIGH DENSITY POLYETHYLENE
LP	LENGTH OF PIPE
SP	SLOPE OF PIPE

PLAN

SCALE: 1" = 20'

20 10 0 20 40 60 80 FEET

GRAPHIC SCALE

NOTES:

1.) ELEVATIONS SHOWN ARE BASED ON AN ASSUMED VERTICAL DATUM. ELEVATION REFERENCE MARK IS THE CONCRETE SILL AT THE BASEMENT DOOR AT THE BLAINE HOUSE. ELEVATION = 100.10'.

2.) SIZES, MATERIALS AND LOCATIONS OF SUBSURFACE UTILITIES SHOWN ARE BASED ON OBSERVED SURFACE FEATURES, SURFACE MARKINGS MADE BY OTHERS AND AVAILABLE PLAN DATA. NOT ALL SUBSURFACE UTILITIES ARE SHOWN. PRIOR TO COMMENCING ANY SUBSURFACE CONSTRUCTION ACTIVITIES, CONTRACTOR SHALL CONTACT DIG-SAFE AND ANY OTHER APPROPRIATE UTILITY TO VERIFY THE EXISTENCE AND LOCATIONS OF UTILITIES ON ALL AREAS TO BE EXCAVATED. THE CONTRACTOR SHALL NOTIFY THE ENGINEER OF THE IDENTIFICATION OF ANY UTILITIES NOT SHOWN ON THE PLAN.

3.) PROPERTY AND R/W LINES SHOWN ARE APPROXIMATE.

4.) PRIOR TO COMMENCING ANY OTHER SUBSURFACE CONSTRUCTION ACTIVITIES, CONTRACTOR SHALL EXCAVATE IN CHAMBERLAIN STREET TO VERIFY THE HORIZONTAL AND VERTICAL LOCATIONS OF THE 6" WATER, THE 10" VCP SEWER, THE UNDERGROUND COMMUNICATIONS CABLES AND, IF NECESSARY, ANY OTHER UTILITIES NOT SHOWN HEREON THAT WERE IDENTIFIED BY DIG-SAFE OR ANY OTHER UTILITY. THE CONTRACTOR SHALL NOTIFY THE ENGINEER IN ADVANCE OF UNCOVERING THE UTILITIES SO THEY MAY BE ACCURATELY LOCATED AND ANY ADJUSTMENTS IN DESIGN CAN BE MADE.

5.) ALT. #3 - PRIOR TO COMMENCING ANY OTHER SUBSURFACE CONSTRUCTION ACTIVITIES, CONTRACTOR SHALL EXCAVATE IN CAPITOL STREET TO VERIFY THE HORIZONTAL AND VERTICAL LOCATIONS OF THE 12" UNDERDRAIN IN CAPITOL STREET AND, IF NECESSARY, ANY OTHER UTILITIES NOT SHOWN HEREON THAT WERE IDENTIFIED BY DIG-SAFE OR ANY OTHER UTILITY. THE CONTRACTOR SHALL NOTIFY THE ENGINEER IN ADVANCE OF UNCOVERING THE UTILITIES SO THEY MAY BE ACCURATELY LOCATED AND ANY ADJUSTMENTS IN DESIGN CAN BE MADE.

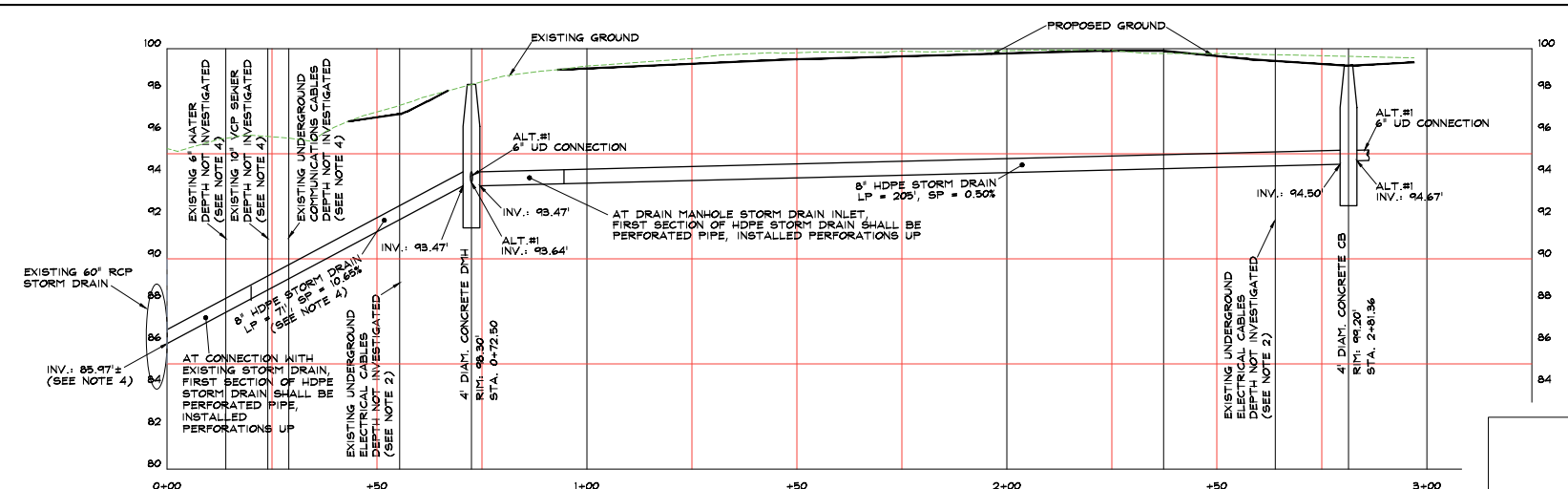

STAFF DRIVEWAY
STORM DRAIN PROFILE

HORIZONTAL SCALE: 1" = 20'
VERTICAL SCALE: 1" = 4'

SEE DRAWING 2 OF 2 FOR "CONSTRUCTION DETAILS"

THAYER
ENGINEERING COMPANY
Land Surveyors Civil Engineers Planners
17 Hasson Street Farmingdale, Maine 04344-1613
(207)582-7762 fax (207)582-8113 thayereng.com

PLAN OF DRIVEWAY IMPROVEMENTS

STATE OF MAINE
BUREAU OF GENERAL SERVICES
192 STATE STREET,
CAPITOL STREET & CHAMBERLAIN STREET
AUGUSTA, MAINE

Date: AUGUST 20, 2015	Drawn by: RC	Chkd. by: EBT
Scale: AS NOTED	Drawing # 1 OF 2	Proj. # 120140

PRELIMINARY WITHOUT ORIGINAL SIGNATURE AND SEAL

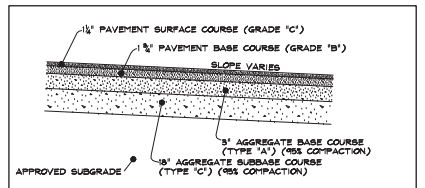

NEW PAVEMENT CROSS-SECTION

NOT TO SCALE

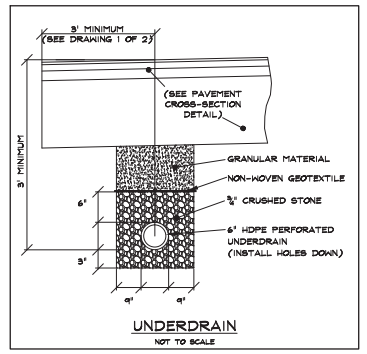

UNDERDRAIN

NOT TO SCALE

SEEDING WILL BE IN ACCORDANCE WITH THE SPECIFICATIONS REFERENCED IN THE PERMANENT GRASS AND LEGUMES COVER BMPS. THE SEEDED AREAS WILL BE PROTECTED DURING ESTABLISHMENT IN ACCORDANCE WITH THE MULCHING BMPS.

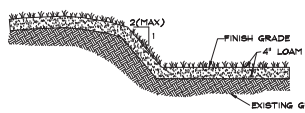

TYPICAL GRASS AREA

NOT TO SCALE

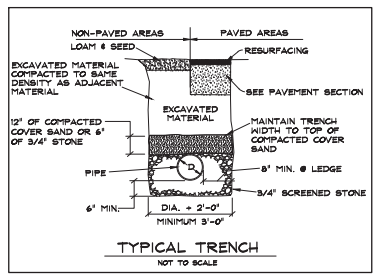

TYPICAL TRENCH

NOT TO SCALE

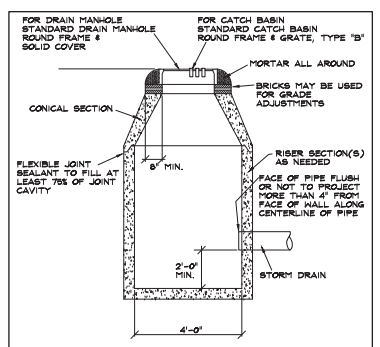

PRECAST CONCRETE DRAIN MANHOLE
& PRECAST CONCRETE CATCH BASIN

NOT TO SCALE

NOTES:
1.) CONTRACTOR TO COORDINATE TRENCH OPENING WITH OWNER TO FACILITATE INSTALLATION OF UTILITIES.
2.) ALL CABLE & CONDUIT INSTALLATION & MATERIALS TO BE SUPPLIED BY OWNER.

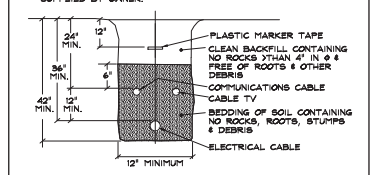

TYPICAL UTILITY TRENCH

NOT TO SCALE

NOTES:
1.) OWNER WILL TERMINATE EXISTING CIRCUITS.
2.) CONTRACTOR WILL COORDINATE WITH OWNER TO DEMO EXISTING CONDUIT AND BOXES, DIG AND BACKFILL NEW TRENCH.
3.) OWNER WILL LAY NEW ELECTRICAL AND COMMUNICATION CONDUITS.
4.) CONTRACTOR WILL COORDINATE WITH OWNER FOR THE PLACEMENT OF NEW SENSOR LOOPS FOR THE GATE CONTROLS UNDER THE BINDER COURSE.

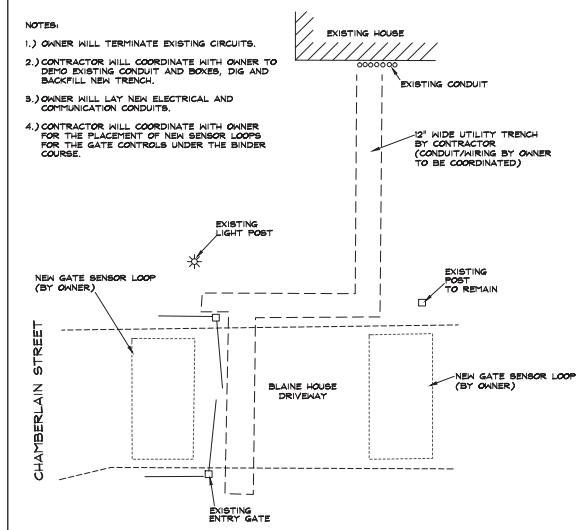

LOCATION OF OWNER REQUIRED
UTILITY TRENCH & GATE SENSOR LOOPS

NOT TO SCALE

INSTALL SILTSACK PER MANUFACTURER'S INSTRUCTIONS AND RECOMMENDATIONS. EMPTY OR REMOVE SEDIMENT FROM SILTSACK WHEN RESTRAINT CORD IS NO LONGER VISIBLE. CLEAN, RINSE AND REPLACE AS NEEDED.

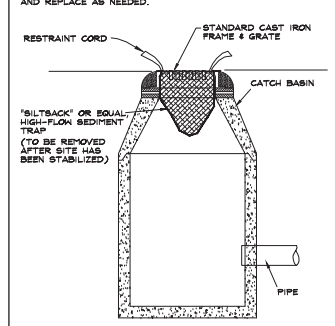

SEDIMENT TRAP
INLET PROTECTION
AT CATCH BASIN

NOT TO SCALE

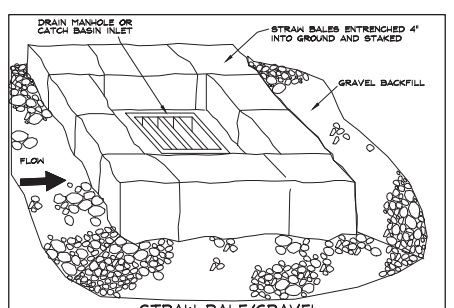

STRAW BALE/GRAVEL
INLET PROTECTION AT
DRAIN MANHOLE & CATCH BASIN

NOT TO SCALE

SEE DRAWING 1 OF 2 FOR "PLAN OF DRIVEWAY IMPROVEMENTS"

THAYER
ENGINEERING COMPANY
Land Surveyors Civil Engineers Planners
17 Hasson Street Farmingdale, Maine 04344-1613
(207)582-7762 fax (207)582-8113 thayereng.com

CONSTRUCTION DETAILS

STATE OF MAINE
BUREAU OF GENERAL SERVICES
192 STATE STREET,
CAPITOL STREET & CHAMBERLAIN STREET
AUGUSTA, MAINE

Date: AUGUST 20, 2015	Drawn by: RC	Chkd. by: EBT
Scale: NO SCALE	Drawing # 2 OF 2	Proj. # 120140

PRELIMINARY WITHOUT ORIGINAL SIGNATURE AND SEAL